A Division of SET Environmental Inc.
735 North Water Street, Suite 510
Milwaukee, Wisconsin 53202
Phone (414) 224-8300
Fax (414) 224-8383

July 10, 2017

Program Assistant
Wisconsin Department of Natural Resources
2300 North Drive Martin Luther King, Jr. Drive
Milwaukee, Wisconsin 53212

Reference: Report for "Development at a Historic Fill Site Exemption Application"
Former Wayne Pigment Corporation
300 South Barclay Street, 139 East Oregon Street
Milwaukee, Wisconsin
FID No. 241029470
BRRTS No. 02-41-553395, 03-41-547627

KEY ENGINEERING GROUP, LTD.
File No. 1701-0785-0001

Dear Program Assistant:

On behalf of PPG GP LLC, Key Engineering Group, Ltd. (KEY) has prepared the enclosed Report to accompany the "Development at a Historic Fill Site Exemption Application" for the above referenced Site. The completed Wisconsin Department of Natural Resources (WDNR) Form 4400-226, Form 4400-226a, and the associated $700 fee are also enclosed.

Ms. Nancy Ryan is the WDNR Project Manager. She is aware of the environmental impacts, proposed active vapor mitigation systems, and that a Build on Historic Fill Site Exemption is being submitted for review. The active vapor mitigation system design has been discussed with Alyssa Sellwood and Ms. Nancy Ryan at the WDNR.

A 30-day expedited review is requested to help the developer meet their proposed construction schedule which would be initiated mid-August.

Please call at (414) 224-8300 if you have any questions regarding the report.

Sincerely,
KEY ENGINEERING GROUP, LTD.

Kenneth W. Wein, CHMM
Principal

Attachments: WDNR Form 4400-226
Check for $700 Review Fee

cc: Mr. Ross Stiteley, PPG GP LLC (email rstiteley@sherman-associates.com)
Mr. Richard Kiemen, PPG GP LLC (email rkiemen@sherman-associates.com)
Mr. Thomas Wentland, WDNR (email thomas.wentland@wisconsin.gov)

A Division of SET Environmental Inc.
735 North Water Street, Suite 510
Milwaukee, Wisconsin 53202
Phone (414) 224-8300
Fax (414) 224-8383

**REPORT**
**FOR**
**"DEVELOPMENT AT A HISTORIC FILL SITE EXEMPTION APPLICATION"**

Former Wayne Pigment Corporation
300 South Barclay Street
139 East Oregon Street
Milwaukee, Wisconsin
FID No. 241029470
BRRTS No. 02-41-553395, 03-41-547627

July 10, 2017

**PREPARED FOR:**

Mr. Ross Stiteley
Mr. Richard Kiemen
PPG GP LLC
233 Park Avenue, Suite 201
Minneapolis, Minnesota 55415

# REPORT
# FOR
# "DEVELOPMENT AT A HISTORIC FILL SITE EXEMPTION APPLICATION"

Former Wayne Pigment Corporation
300 South Barclay Street
139 East Oregon Street
Milwaukee, Wisconsin
FID No. 241029470
BRRTS No. 02-41-553395, 03-41-547627

July 10, 2017

## PREPARED FOR:

Mr. Ross Stiteley
Mr. Richard Kiemen
PPG GP LLC
233 Park Avenue, Suite 201
Minneapolis, Minnesota 55415


KEY ENGINEERING GROUP, LTD.

Toni L. Schoen
Senior Project Manger

Kenneth W. Wein, CHMM
Principal

# TABLE OF CONTENTS


**1.0 INTRODUCTION ..... 1**

**2.0 BACKGROUND ..... 2**

2.1 SITE LOCATION AND CONTACTS ..... 2
2.2 SITE DESCRIPTION ..... 3
*2.2.1 300 South Barclay Street ..... 3*
*2.2.2 139 East Oregon Street ..... 4*
2.3 SITE HISTORY ..... 4

**3.0 SITE DEVELOPMENT PLAN ..... 6**

**4.0 SITE CHARACTERIZATION ..... 7**

4.1 TOPOGRAPHY ..... 7
4.2 SITE GEOLOGY ..... 7
4.3 SITE HYDROLOGY AND HYDROGEOLOGY ..... 8

**5.0 ENVIRONMENTAL INVESTIGATION ..... 9**

5.1 SOIL ANALYTICAL RESULTS ..... 9
*5.1.1 VOCs ..... 9*
*5.1.2 Polycyclic Aromatic Hydrocarbons Analytical Results ..... 11*
*5.1.3 Metals ..... 11*
5.2 GROUNDWATER ANALYTICAL RESULTS ..... 12
*5.2.1 Volatile Organic Compounds ..... 13*
*5.2.2 Metal Analytical Results ..... 14*
*5.2.3 Polycyclic Aromatic Hydrocarbons Analytical Results ..... 15*
5.3 VAPOR ANALYTICAL AND SUB-SLAB PILOT TEST RESULTS ..... 15
*5.3.1 Building 11 ..... 15*
*5.3.2 Buildings 33 & 34 ..... 15*
5.4 SOIL GAS RESULTS ..... 16

**6.0 SUMMARY OF INVESTIGATION FINDINGS AND CONCLUSIONS ..... 18**

**7.0 EXEMPTION CRITERIA EVALUATION ..... 22**

7.1 PROPOSED NEW DEVELOPMENT ..... 22
7.2 GENERAL ..... 22
7.3 SETTLEMENT CONSIDERATIONS ..... 22
7.4 BUILDING FOUNDATION AND FLOOR SLABS ..... 23
7.5 PAVEMENT AND LANDSCAPING ..... 23
7.6 UTILITIES ..... 23

7.7 METHANE AND TOXIC GAS CONSIDERATIONS ..... 24
*7.7.1 Building 11 Active Vapor Mitigation System Design ..... 24*
*7.7.2 Building 11 Sumps and Basement Walls ..... 25*
*7.7.3 Elevator Shafts ..... 25*
*7.7.4 Building Addition Active Vapor Mitigation System Design ..... 25*
7.8 SITE WORKER SAFETY CONSIDERATIONS ..... 26
7.9 WASTE HANDLING PLAN ..... 26
**8.0 CONCLUSIONS ..... 27**
**9.0 GENERAL QUALIFICATIONS ..... 28**
**10.0 REFERENCES ..... 29**

**LIST OF FIGURES**


| | |
|---|---|
| Figure 1 | Site Location Map |
| Figure 2 | Site Layout Map |
| Figure 3 | 300 South Barclay Street Conceptual Site Layout |
| Figure 4 | 139 East Oregon Street Conceptual Site Layout |
| Figure 5 | Location of Geologic Cross Section & Estimated Extent of Fill Material |
| Figure 6 | Geologic Cross Section A-A’ |
| Figure 7 | Soil Benzene Isoconcentration Map Less than 4 Feet |
| Figure 8 | Soil Ethylbenzene Isoconcentration Map Less than 4 Feet |
| Figure 9 | Soil Xylenes Isoconcentration Map Less than 4 Feet |
| Figure 10 | Soil Naphthalene Isoconcentration Map Less than 4 Feet |
| Figure 11 | Soil Trichloroethene Isoconcentration Map Less than 4 Feet |
| Figure 12 | Soil Trichloroethene Isoconcentration Map (4-6 Feet) |
| Figure 13 | Soil Benzo(a)pyrene Isoconcentration Map Less than 4 Feet |
| Figure 14 | Soil Arsenic Isoconcentration Map Less than 4 Feet |
| Figure 15 | Soil Lead Isoconcentration Map Less than 4 Feet |
| Figure 16 | Soil Total Chromium Isoconcentration Map Less than 4 Feet |
| Figure 17 | Groundwater Benzene Isoconcentration Map |
| Figure 18 | Groundwater Ethylbenzene Isoconcentration Map |
| Figure 19 | Groundwater Naphthalene Isoconcentration Map |
| Figure 20 | Groundwater Xylenes Isoconcentration Map |
| Figure 21 | Groundwater Trichloroethene Isoconcentration Map |
| Figure 22 | Groundwater Dissolved Arsenic Isoconcentration Map |
| Figure 23 | Groundwater Total Chromium Isoconcentration Map |
| Figure 24 | Groundwater Benzo(a)pyrene Isoconcentration Map |
| Figure 25 | Building 11 Active Vapor Mitigation System Design |
| Figure 26 | Building 11 and New Building Vapor Mitigation System Floor Plans |
| Figure 27 | Buildings 33 and 34 Active Vapor Mitigation System Design |
| Figure 28 | Buildings 33, 34, and New Building Vapor Mitigation System Floor Plans |
| Figure 29 | New Building Active Vapor Mitigation System Design |

## LIST OF TABLES


| | |
|---|---|
| Table 1 | Soil Analytical Results |
| Table 2 | Groundwater Analytical Results |
| Table 3 | Sub-Slab Vapor Analytical Results |
| Table 4 | Near Slab Soil Gas Analytical Results |
| Table 5 | Soil Gas Measurements |


## LIST OF APPENDICES


| | |
|---|---|
| Appendix 1 | Site Photographs |
| Appendix 2 | DRAFT Continuum Architects Drawings |
| Appendix 3 | Soil Boring Logs (Form 4400-122) |
| Appendix 4 | Geotechnical Engineering Report by GESTRA Engineering, Inc. |

## 1.0 INTRODUCTION

On behalf of PPG GP LLC, Key Engineering Group, Ltd (KEY) prepared this report to support a "Development at a Historic Fill Site Exemption Application" for former Wayne Pigment Corporation located at 300 South Barclay Street and 139 East Oregon Street, in Milwaukee, Wisconsin (Site). This Site is proposed for redevelopment including renovation of three existing buildings and the construction of two new buildings.

This Application has been prepared in accordance with applicable state regulations and guidance pertaining to historic fill sites including:

- *Solid Waste Management*, Chapters NR 500, Wisconsin Administrative Code (Wis. Admin. Code).
- *Investigation and Remediation of Environmental Contamination*, Chapters NR 700 Wis. Admin. Code.
- *WDNR Publications PUB-RR-683, PUB-RR-684 and PUB-RR-685*, all pertaining to construction on historic fill sites.

PPG GP LLC is requesting this exemption because NR 506.085 prohibits development on solid waste unless an exemption has been granted by the WDNR in accordance with NR 500.08.

Specifically, this exemption request was prepared to document to the WDNR that the Site development plan will address the following WDNR concerns associated with construction on solid waste:

- Short and long-term safety of the development.
- Management of Site construction soil and groundwater.
- Safety of Site workers during construction.

## 2.0 BACKGROUND

Below is a discussion of the Site location, key contacts, description of the properties, and Site history.

### 2.1 Site Location and Contacts

The Site consists of two parcels with the addresses 300 South Barclay Street and 139 East Oregon Street, in the City of Milwaukee, Milwaukee County, Wisconsin. The Site is associated with tax key numbers 4280506121 and 4280499100. The Site is approximately 1.6 acres. The Site is in the northeast quarter of northeast quarter of Section 32, Township 7 North, Range 22 East. The Site location is presented as Figure 1 (USGS, 1971). The Site is located at an approximate latitude of $43^0$ 01' 40.11" and longitude of $87^0$ 54' 34.19".

The Site is in a mixed area of industrial and residential land use. The Site is bounded by East Oregon Street and residential housing to the north, and industrial and commercial to the east, south, and west. Surrounding land-use is described as follows:

North: Residential housing and parking lot.
Knight Barry Title, Inc. used as office space for a title insurance company.
Gravel lot.

South: Railroad spur right of way.
South Jake Marchese Way and East Florida Street right of way.
Habitat for Humanity ReStore used as warehouse storage and sale of donated home improvement goods and supplies.

East: Wisconsin Marketing Services, Inc. used for binding, cutting, and laminating services for booklets.

West: Paved lot - Former Balistreri Trucking used as a base of operations for contract truck hauling services.

The following contact information is provided for the Site and environmental consultant:

**Current Property Owner:**
Ross Stiteley, Agent
PPG GP LLC
233 Park Avenue, Suite 201
Minneapolis, Minnesota 55415
612-332-3000 (telephone)
rstiteley@sherman-associates.com

**Property Developer:**
Ross Stiteley, Agent
PPG GP LLC
233 Park Avenue, Suite 201
Minneapolis, Minnesota 55415
612-332-3000 (telephone)
rstiteley@sherman-associates.com

**Environmental Consultant:** Kenneth W. Wein, CHMM
Key Engineering Group, Ltd.
735 North Water Street, Suite 510
Milwaukee, Wisconsin 53202
414-224-8300 (telephone)
kwein@keyengineering.com

**Redevelopment Contractor:** Mike Timmers
Greenfire Management Services, LLC
3215 West State Street, Suite 200
Milwaukee, Wisconsin 53208
414-290-9400 (telephone)
mike.timmers@greenfire.com

**Previous Property Owner and Former Site Names:**

| | | |
|---|---|---|
| Patton Paint Company/Pittsburgh Plate Glass Company | 1905-1975 | Buildings 11, 33, 34, and 35 |
| Wayne Chemical Corporation | 1975-1985 | Buildings 11, 33, and 35 |
| Wayne Chemical Corporation | 1975-1976 | Building 34 |
| Hydrite Chemical | 1976 to 1986 | Building 34 |
| Wayne Pigment Corporation | 1985-2011 | Buildings 11, 33, 34, and 35 |
| WPC Technologies, Inc. | 2011-2017 | Buildings 11, 33, 34, and 35 |

## 2.2 Site Description

The Site consists of two parcels with the addresses 300 South Barclay Street and 139 East Oregon Street. The Site layout is presented as Figure 2. Site photographs are presented in Appendix 1. Below is a summary of each address' total acres, current zoning, and description.

### *2.2.1 300 South Barclay Street*

The property is located at 300 South Barclay Street is 0.72 acres and zoned IM – Industrial Mixed. This parcel is occupied by a 5-story building (Building 11) constructed of concrete block with a basement. The building is located on the north half of the property. The south half is asphalted with a concrete containment structure that formerly contained a series of aboveground storage tanks (ASTs). The Site is accessible through a gated entrance along East Oregon Street to the north, an entrance along South Barclay Street to the west, and a gated entrance along East Florida Street to the south. A rail spur enters the Site from the south and runs along the east property line. There is also a second buried rail spur located in the alley east of Building 11.

The building is serviced by municipal sewer and water, as well as natural gas and electric. There are eight sumps located in the basement of Building 11. There is a tunnel that leads from the northeast corner of the basement to Building 19 located offsite. Today, the building is vacant.

### *2.2.2 139 East Oregon Street*

The property located at 139 East Oregon Street is 0.877 acres and zoned IM – Industrial Mixed. This parcel currently has three vacant buildings (Buildings 33, 34, and 35) located along the east side of the Site. Buildings 33 and 34 are 3-story buildings with concrete slab-on-grade construction except for a small room located at the northeast corner of the building that allows access to a tunnel that transverses under South Barclay Street to Building 11. Buildings 33 and 34 are connected by an elevated concrete walkway. Building 35 is 1-story with approximately half of the building below grade and half of the building above grade. An asphalt parking lot is located on the west side of Building 33 and extends to the western property line. The Site is accessible through one gated entrance along East Oregon Street and through two gated entrances along South Barclay Street. A curving elevated rail spur runs between Buildings 34 and 35. The rail spur has been disconnected from the railroad main line and dead ends before reaching South Barclay Street. A berm that supports the elevated rail spur abuts Building 34.

There is a closed system catchment basin and sump in Building 33. The catchment basin currently has a couple of inches of sediment. The sump is dry. There are two stormwater manholes in Building 34 and one plugged sump. There is also a small vault that leads to an underground tunnel with conveyance lines. This tunnel (approximately 2.5 feet deep) runs from Building 35 north along the interior wall of Building 33 to a manhole located between Buildings 33 and 34, and then runs due east under South Barclay Street to a manhole located south of Building 11 (Figure 2). Buildings 33 and 34 are serviced by municipal sewer and water, as well as natural gas and electric.

Building 35 historically contained about 16 ASTs when the PPG operated the Site. There are no visible sumps or floor drains located in Building 35. Building 35 likely has natural gas and electric.

## 2.3 Site History

The property was historically utilized by multiple companies including Patton Paint Company, Pittsburgh Plate & Glass (PPG), Hydrite Chemical Company (Hydrite), and Wayne Chemical Corporation, Wayne Pigment Corporation, or WPC Technologies.

Patton Paint Company and/or PPG operated from approximately 1905 to 1975. PPG produced paint pigment and fabricated glass. PPG operated Building 11 as a “dry color factory” and outdoor storage area with 26 storage tanks, Building 33 was a manufacturing building for Minimax varnish and lacquer, Building 34 was the Manway warehouse, and Building 35 had 16 ASTs. In 1949, there were at least 25 underground storage tanks (USTs) located south of Building 11 and another 16 ASTs located inside Building 35. The USTs were removed between 1986 and 1987.

Hydrite operated from 1975 to 1986 in Building 34 as a temporary hazardous waste storage facility. Wayne Chemical Corporation purchased Building 34 from PPG in 1975. Hydrite purchased Building 34 from Wayne Chemical Corporation in 1976. Wayne Pigment Corporation purchased Building 34 from Hydrite in 1985. In

2015, the four buildings were utilized as a manufacturing facility which produced chromates for paint pigment application in various industries, but mostly for aviation. Storage of hazardous waste was present within Building 11. Both trivalent and hexavalent chrome have been produced in Building 11, though all hexavalent chrome has been converted to trivalent chrome since the 1990's. The facility had produced a lead chromate at one time, but more recently had produced mostly strontium chromate and a small amount of zinc chromate. Ten chemical ASTs were located south of Building 11 with capacities ranging from 5,000-gallons to 25,000-gallons. The ASTs were removed in 2016. One 13,000-gallon diesel AST and 18 USTs were previously located on the Site. The USTs contained thinner, mineral spirits, resin, lacquer thinner, and fuel oil with capacities ranging from 10,000-gallons to 12,000-gallons.

## 3.0 Site Development Plan

The Barclay consists of two parcels and includes four buildings including Buildings 11, 33, 34, and 35. Building 11 is a 5-story building with a full basement and penthouse. Buildings 33 and 34 are 3-story, slab-on-grade buildings. Building 35 is a single-story building with half of the building located below grade.

The Site redevelopment plan includes converting Buildings 11, 33, and 34 to residential housing. Improvements to Building 35 will be made to limit further deterioration. This may include repair or replacement of the roof, tuck-pointing, and removal of the exterior ladder(s), and restore power to the building. Because the Site is listed on the National Register of Historical Sites, the building will be maintained for a minimum of five years following completion of construction at Buildings 11, 33, and 34. There is currently no long-term plan for the use of Building 35.

The Site redevelopment will also include construction of two building additions including one south of Building 11, and a connector to link Buildings 33 and 34, replacement of the asphalt surface west of Building 33, removal of the horizontal component to the elevated rail line located south of Building 33, removal of the concrete AST containment structure south of Building 11, clearing, grubbing, and replacement of landscaped areas, maintenance of existing landscaped areas, abandonment of underground utilities, and installation of new utilities. The locations of these improvements are presented on draft construction plans in Appendix 2. Figures 3 and 4 present the conceptual site layout for the east and west portions of the Site.

## 4.0 Site Characterization

Below is a summary of the Site topography, geology, and hydrogeologic conditions.

### 4.1 Topography

The topography of the Site is relatively flat (MCLIO, 2016). The east half of the Site (300 South Barclay Street) slopes from the north to the southeast with elevations ranging from approximately 590 to 588 feet above mean sea level (amsl). The west side of the Site (139 East Oregon Street) slopes from the north to the southwest. However, there is a berm located in the southwest corner of the Site where the grade increases from approximately 589 feet to 604 feet amsl. Two elevated railroad tracks are present at the top of the berm.

### 4.2 Site Geology

The Site geology was obtained through the advancement of investigation borings and wells. The location of geologic cross section A-A' is shown on Figure 5 and the cross-section is presented as Figure 6. Below is a summary of the Site geology.

- Fill Material
  The fill material was observed across the Site from ground surface to approximately 15 feet below ground surface (bgs) and described as primarily silt with some fine to medium gravel and/or some medium to coarse sand. Debris was also observed within the soil matrix and consisted of various material including crushed brick and concrete, slag, glass, and foundry sand. The depth of observed debris at each boring location is presented on Figure 5.

- Organic Silt
  Underlying the fill material is an organic silt. The native organic silt layer was approximately 2 to 3 feet thick and was observed across the Site between 15 feet and 20 feet bgs (elevation of approximately 575 and 570 feet amsl.

- Sand
  Sand was observed underlying the organic silt layer and was approximately 24 feet thick from approximately 16 to 40 feet (elevation of approximately 572 feet to 545 feet amsl). The native sand was described as fine to coarse with trace silt. Shell fragments were observed throughout this sand layer.

- Interbedded Silt and Clay
  Interbedded silt and clay was observed underlying the sand layer to a maximum depth drilled of 45 feet bgs or 538 feet amsl. Trace sand lenses were also observed in the interbedded silt and clay.

Bedrock was not encountered during drilling; however, based on water supply well constructor's reports and depth of the geotechnical soil borings advanced onsite, dolomite bedrock may be encountered at a depth greater than 121 feet bgs (DATCP, 2015). The dolomite bedrock belongs to the Racine Formation. The Racine Formation is a medium to coarse grained, thin to thickly bedded, very light to light gray, fossiliferous dolomite (WGNHS, 2004).

### 4.3 Site Hydrology and Hydrogeology

Groundwater measured in Site monitoring wells generally ranges in depth from approximately 3.3 to 9.3 feet bgs, except for monitoring wells MW-11 through MW-13 located in the alley between 300 South Barclay Street and 214 East Florida Street where groundwater was encountered between approximately 9.8 and 12.9 feet bgs. Groundwater measured in the piezometer was at approximately 10.5 feet bgs. Groundwater flow is generally to the east-northeast towards the Milwaukee River.

The Milwaukee River which is located approximately 880 feet east of the site (MCLIO, 2016). The surface elevation of the Milwaukee River is approximately 582 feet amsl. The Milwaukee River is one of the three primary rivers in Milwaukee. The Milwaukee River flows southeast from the site for approximately 1,080 feet to the Milwaukee River and Kinnickinnic River confluence before flowing east and discharging into Lake Michigan. The location of the site and the Milwaukee River are presented on Figure 1.

A search for the location of potential water supply wells located within 1,200 feet of the groundwater plume was completed using the Wisconsin Department of Agriculture, Trading, and Consumer Protection (DATCP) Well Constructor's Report database (DATCP, 2015). Four water supply wells were identified including one approximately 270 feet northeast, two wells located approximately 620 and 850 feet east, and one well located approximately 630 feet southwest. The approximate locations of the wells are presented on Figure 1. The well constructor reports for the two east wells stated steel casing was installed into the limestone bedrock at 665 feet bgs and 207 feet bgs.

## 5.0 ENVIRONMENTAL INVESTIGATION

Soil boring, monitoring well, and soil gas probe locations are presented on Figure 2. A summary of available soil, groundwater, and vapor data are presented in Tables 1 through 4, respectively. Soil analytical results from previous and current investigation activities were compared to the non-industrial direct contact residual contaminant levels (RCLs), protection of groundwater RCLs, and background threshold values for metals, where available. Groundwater analytical results were compared to NR 140 preventive action limits and enforcement standards. Below is a summary of the exceedances by media.

### 5.1 Soil Analytical Results

A total of 146 soil borings have been advanced across the Site to date. Soil samples were laboratory analyzed for VOCs, PAHs, RCRA metals, trivalent chromium, and hexavalent chromium. Soil analytical results are summarized in Table 1. Soil boring locations are presented on Figure 2. Below is a summary of the soil analytical exceedances organized by criteria and analyses.

#### *5.1.1 VOCs*

A total of 259 soil samples were laboratory analyzed for VOCs. Soil analytical results are summarized in Table 1. Petroleum constituents including benzene, ethylbenzene, naphthalene, toluene, 1,2,4-trimethylbenzene, 1,3,5-trimethylbenzene, and total xylenes and chlorinated VOC constituents including TCE, 1,1-dichloroethane (1,1-DCA), and vinyl chloride exceeded their respective RCLs at the Site. Soil isoconcentration maps from 0 to 4 feet bgs are presented for benzene, ethylbenzene, xylenes, naphthalene, and TCE as Figures 7 through 11, respectively. Additionally, an isoconcentration map from 4 to 6 feet bgs for TCE is presented as Figure 12. These maps illustrate the general horizontal distribution of soil impacts that will be disturbed during Site redevelopment.

VOC concentrations were reported above their respective non-industrial direct contact RCLs for the following analyses, locations, and concentrations:

- Benzene concentrations exceeded the non-industrial direct contact RCL of 1.6 mg/kg at borings B-8 and SB-36 with concentrations ranging from 1.5 milligram per kilogram (mg/kg) to 1.7J mg/kg.

- Ethylbenzene concentrations exceeded the non-industrial direct contact RCL of 8.03 mg/kg at borings B-7, B-8, B-10, MW-6, MW-13, SB-31, SB-35, SB-36, SB-54, SB-82, SB-86, V-2, with concentrations ranging from 8.3 mg/kg to 1,050 mg/kg.

- Naphthalene concentrations exceeded the non-industrial direct contact RCL of 5.52 mg/kg at borings at B-7, B-8, B-10, SB-35, SB-36, SB-82, SB-83, and SB-86 with concentrations ranging from 13 mg/kg to 399 mg/kg.

- Toluene concentrations exceeded the non-industrial direct contact RCL of 818 mg/kg at boring at SB-86 at 886 mg/kg.

- 1,2,4-Trimethylbenzene concentrations exceeded the non-industrial direct contact RCL of 219 mg/kg at borings at B-8, MW-13, SB-35, SB-36, SB-82, SB-83, and SB-86 with concentrations ranging from 240 mg/kg to 926 mg/kg.

- 1,3,5-Trimethylbenzene concentrations exceeded the non-industrial direct contact RCL of 182 mg/kg at borings B-8, SB-35, SB-82 with concentrations ranging from 221 mg/kg to 387 mg/kg.

- Xylenes concentrations exceeded the non-industrial direct contact RCL of 260 mg/kg at borings at B-8, B-10, SB-35, SB-36, SB-82, and SB-86 with concentrations ranging from 390.7 mg/kg to 7,980 mg/kg.

- TCE concentrations exceeded the non-industrial direct contact RCL of 1.3 mg/kg at borings B-2, MW-2, SB-2, SB-17, SB-19, SB-22, SB-24, SB-34, SB-38, SB-39, SB-40, SB-48, SB-49, SB-50, SB-51, SB-65, SB-67, SB-68, SB-69, SB-70, SB-71, V-4 through V-6, V-9 through V-27, V-29, and V-31 through V-42 with concentrations ranging from 1.3 mg/kg to 1,300 mg/kg.

- 1,1-DCA concentrations exceeded the non-industrial direct contact RCL of 5.06 mg/kg at boring SB-39, SB-67, SB-69, V-11, V-15, V-18, V-32, and V-33 with concentrations ranging from 5.4 mg/kg to 30.2 mg/kg.

- Vinyl chloride concentrations exceeded the non-industrial direct contact RCL of 0.067 mg/kg at boring at SB-24, SB-49, SB-67, and SB-68 with concentrations ranging from 0.34 mg/kg to 4.1 mg/kg.

Key findings from these borings and analytical results include:

- Petroleum VOCs were detected at higher concentrations on the east side of the Site, while chlorinated VOCs were detected at higher concentrations on the west side of the Site. The source of the petroleum VOCs is attributed to the historical USTs and ASTs and railroad tracks that were used to deliver product to the tanks. The source of the chlorinated VOCs is attributed to poor housekeeping of solvent used during the production of lacquer and varnishes.

- RCL exceedances were generally detected from 0 to 10 feet bgs in the fill material.

- The highest petroleum VOCs were detected in borings B-10, B-36, and SB-82, SB-83, and SB-86. Boring B-10 is located near the northeast corner of Building 11. Borings B-36, and SB-82, SB-83, and SB-86 is located within the AST containment area.

- The highest chlorinated VOCs were detected in borings MW-2, SB-24, SB-39, SB-49, SB-65, SB-67, SB-69, V-12, V-22, and V-37. These borings are located between Buildings 33 and 34, and under Building 34. A source removal excavation is proposed between Buildings 33 and 34 (where the building addition to connect Buildings 33 and 34 is proposed) and under Building 34, to remove a

significant volume of mass, improve groundwater quality in the area, and reduce the vapor intrusion risk to the buildings. A barrier cap will also be installed over the area including the new proposed building addition and landscaping.

### *5.1.2 Polycyclic Aromatic Hydrocarbons Analytical Results*

A total of 55 soil samples were collected for laboratory analysis of PAHs. Soil analytical results are summarized in Table 1. One or more PAHs exceeded their respective non-industrial direct contact RCLs in 49 of the 56 soil samples analyzed. PAHs detected above the non-industrial direct contact RCLs included benzo(a)anthracene, benzo(a)pyrene, benzo(b)fluoranthene, benzo(k)fluoranthene, chrysene, dibenzo (a,h)anthracene, indeno(1,2,3-cd)pyrene, and naphthalene. Total detected PAH concentrations ranged from 0.045 to 4,122.6 mg/kg.

Benzo(a)pyrene has one of the lowest non-industrial direct contact RCLs. A soil isoconcentration map for benzo(a)pyrene from 0 to 4 feet is presented as Figure 13.

PAHs were generally exceeded across the Site, which is likely attributed to the industrial fill present at the Site to depths up to approximately 15 feet bgs and on the surrounding properties. However, the highest concentrations were detected where the historical PPG USTs and ASTs were located south of Building 11 and the alley located east of Building 11 where there are two railroad tracks that were historically used for the delivery of product to the USTs and ASTs and properties located north of the Site. The exception to this observation is the elevated total detected PAH concentration reported at boring B-2 located in the parking lot west of Building 33.

### *5.1.3 Metals*

A total of 110 sample locations were laboratory analyzed for one or more RCRA metals. Additionally, 77 soil samples were laboratory analyzed for trivalent chromium and hexavalent chromium. Soil metal analytical results are presented in Table 1. Below is a summary of the soil exceedances.

- Arsenic exceeded the background threshold value (BTV) of 8.0 mg/kg and non-industrial direct contact RCL of 0.677 mg/kg in 84 of the 102 soil samples analyzed. Arsenic concentrations reported above the BTV ranged from 8.1 to 56,000 mg/kg.

  A soil arsenic isoconcentration map from 0 to 4 feet bgs is presented as Figure 14 to demonstrate where the highest concentrations of arsenic are located that will be disturbed during Site redevelopment.

  The presence of arsenic is at least partially attributed to the industrial fill present at the Site and surrounding properties. Arsenic concentrations greater than 5,000 mg/kg were generally located where the historical PPG arsenic acid USTs and ASTs were located and decreased with depth at borings SB-82 through SB-85, and increased with depth at boring SB-86.

- Lead exceeded the background threshold value of 52 mg/kg in 76 of the 99 soil samples analyzed. Lead concentrations above the BTV ranged from 54.6 to 22,300 mg/kg. Lead also detected above the non-industrial direct contact RCL of 400 mg/kg in 34 of the 99 soil samples.

  A soil lead isoconcentration map from 0 to 4 feet bgs is presented as Figure 15 to demonstrate where the highest concentrations of lead are located that will be disturbed during Site redevelopment.

  The presence of lead is at least partially attributed to the industrial fill present at the Site and surrounding properties. The highest lead concentrations were observed under Building 11, south of Building 11 where the historical PPG USTs and ASTs were located, and east of Building 11 where the two railroad tracks that were historically used for the delivery of product to the USTs and ASTs are located, under the elevated railroad spur north of Building 35, and west of Building 33 in the parking lot.

- Total chromium exceeded the BTV of 44 mg/kg in 58 of the 100 soil samples analyzed. Total chromium concentrations above the BTV ranged from 44 to 33,000 mg/kg. Trivalent chromium concentrations ranged from <0.24 to 46,000 mg/kg, compared to a non-industrial direct contact RCL of 100,000 mg/kg. Hexavalent chromium concentrations ranged from 1.5 to 99.1 mg/kg, compared to a non-industrial direct contact RCL of 0.293 mg/kg.

  A soil total chromium isoconcentration map from 0 to 4 feet bgs is presented as Figure 16 to demonstrate where the highest concentrations of hexavalent chromium are located that will be disturbed during Site redevelopment.

  The highest total chromium, trivalent chromium, and hexavalent chromium concentrations were observed under the southeast corner of Building 11, south of Building 11 where the historical PPG USTs and ASTs were located, and east of Building 11 where the two railroad tracks that were historically used for the delivery of product to the USTs and ASTs are located.

- Cadmium exceeded the BTV of 1.0 mg/kg in 23 of the 68 soil samples analyzed. Cadmium concentrations above the BTV ranged from 1.4 to 119 mg/kg. Cadmium exceeded the non-industrial direct contact RCL of 71 mg/kg at SB-82 from 0 to 2 feet bgs at 119 mg/kg.

- Mercury exceeded the protection of groundwater RCL of 0.208 mg/kg in 32 of 67 soil samples analyzed. Mercury concentrations above this RCL ranged from 0.29 to 2.30 mg/kg. Mercury was not detected above the non-industrial direct contact RCL of 3.13 mg/kg onsite.

## 5.2 Groundwater Analytical Results

A total of 19 monitoring wells (MW-1 through MW-13, MW-14R, and MW-15 through MW-19) and one piezometer (PZ-1) have been installed at the Site to date. Also, 24 temporary wells (TW-1 through TW-10, TW-2 (August 2015), TW-42, TW-45, TW-47, TW-50 through TW-52, TW-54, TW-57, TW-59, TW-61,

TW-83, TW-85, and TW-86) were installed and sampled at the Site. The well locations are presented on Figure 2.

Groundwater samples were submitted for laboratory analysis of VOCs, PAHs, and dissolved RCRA metals, total chromium, trivalent chromium, and hexavalent chromium. The most current groundwater samples from the monitoring wells were collected on December 21, 2015. Groundwater analytical results are summarized in Table 2. Below is a summary of the groundwater results.

### *5.2.1 Volatile Organic Compounds*

Petroleum VOCs including benzene, ethylbenzene, naphthalene, toluene, total trimethylbenzenes, and total xylenes exceeded their respective ESs at the Site. Groundwater analytical results are summarized in Table 2. Below is a summary of the groundwater ES exceedances from the last groundwater sampling event at each well.

- Benzene concentrations exceeded the ES of 5 micrograms per liter (µg/l) at temporary wells TW-50, TW-52, and TW-83, and monitoring wells MW-4, MW-5, MW-6, MW-8, and MW-9 with concentrations ranging from 5.0 µg/l to 82.4 µg/l.

- Ethylbenzene exceeded the ES of 700 µg/l at temporary wells TW-7, TW-8, TW-10, TW-61, TW-83, and TW-86 and monitoring well MW-6 with concentrations ranging from 900 µg/l to 63,400 µg/l.

- Naphthalene exceeded the ES of 100 µg/l at temporary wells TW-10, and TW-83 and monitoring wells MW-8 with concentrations ranging from 124 µg/l to 205 µg/l.

- Toluene concentrations exceeded the ES of 800 µg/l at temporary wells TW-7, TW-8, TW-47, TW-83, and TW-86 with concentrations ranging from 824 µg/l to 10,000 µg/l.

- Total trimethylbenzenes concentrations exceeded the ES of 480 µg/l at temporary wells TW-7, TW-8, TW-61, TW-83, and TW-83 and monitoring wells MW-4, MW-6, and MW-8 with concentrations ranging from 585 µg/l to 8,300 µg/l.

- Total xylenes concentrations exceeded the ES of 2000 µg/l at temporary wells TW-7, TW-8, TW-10, TW-61, TW-83, and TW-86 and monitoring wells MW-4, MW-6, and MW-8 with concentrations ranging from 2,636 µg/l to 39,000 µg/l.

Groundwater benzene, ethylbenzene, naphthalene, and total xylenes isoconcentration maps are presented as Figures 17 through 20, respectively. The exceedances were primarily detected in wells located south and east of Building 11. The source of petroleum constituents in groundwater is likely related to the historical USTs that were located near MW-4 and MW-8 and the railroad tracks that delivered raw material to the Site (Figure 2).

Chlorinated constituents including TCE, 1,1,1-TCA, 1,1-dichloroethene (1,1-DCE), methylene chloride, and vinyl chloride exceeded their respective ESs at the Site. Acetone is not a chlorinated compound, but is used as a solvent, like TCE. Groundwater analytical results are summarized in Table 2. TCE was the primary chlorinated VOC exceeded in groundwater.

A groundwater TCE isoconcentration map using the December 21, 2015 monitoring well analytical results and temporary well analytical results from 2006 through 2016 is presented as Figure 21. TCE exceeded the ES of 5 µg/l at temporary wells TW-2, TW-3, TW-4, and TW-50 and monitoring well MW-1, MW-2, and MW-19, and piezometer PZ-1. The highest TCE concentration in groundwater was detected at MW-2 at 271 µg/l. The exceedances were primarily detected at monitoring wells MW-1, MW-2, and MW-19 located on the east of side of the Site near Buildings 33 and 34 where Minimax varnish and lacquer were manufactured. The source of chlorinated constituents in groundwater is likely associated with historical use of solvents at the Site.

A source removal excavation is proposed between Buildings 33 and 34 (where the building addition to connect Buildings 33 and 34 is proposed) and under Building 34, to remove a significant volume of mass, improve groundwater quality in the area, and reduce the vapor intrusion risk to the buildings.

### *5.2.2 Metal Analytical Results*

Groundwater samples were laboratory analyzed for dissolved RCRA metals, total chromium, trivalent chromium, and hexavalent chromium. Groundwater analytical results are summarized in Table 2. Below is a summary of the groundwater analytical ES exceedances from the last groundwater sampling event at each well for these metals.

- Dissolved arsenic concentrations exceeded the ES of 10 µg/l at temporary wells TW-2, TW-57, TW-59, TW-61, TW-83, TW-85, and TW-86 and monitoring wells MW-3, MW-4, MW-5, MW-6, MW-8, MW-9, MW-10, MW-11, MW-13, MW-14R with concentrations ranging from 15.8 µg/l to 507,000 µg/l. A groundwater arsenic isoconcentration map is presented as Figure 22. The elevated arsenic is located south of Building 11 where the arsenic acid tanks were located and where raw material was delivered via rail lines.

- Total chromium concentrations exceeded the ES of 100 µg/l at temporary wells TW-59, TW-61, TW-83, TW-85, and TW-86 and at monitoring well MW-5, MW-6, MW-7, MW-10, MW-13, MW-14R, and MW-15 with concentrations ranging from 121 µg/l to 15,000 µg/l. A groundwater dissolved total chromium isoconcentration map is presented as Figure 23. The elevated chromium was detected at TW-86 south of Building 11 where the bichromate tanks were located and where raw material was delivered via rail lines.

An injection of zero valent iron (ZVI) is proposed in the area of elevated arsenic and chromium under the footprint of the former AST containment area and partially under the footprint of the proposed building addition south of Building 11. ZVI has been proposed to reduce the dissolved metal concentrations and limit

further migration of the dissolved phase mass by precipitating metals from the groundwater. A barrier cap will also be installed over the area including the new proposed building addition and an asphalt surface.

### *5.2.3 Polycyclic Aromatic Hydrocarbons Analytical Results*

One or more PAHs exceeded their respective ESs at monitoring wells MW-6 through MW-8 and MW-10 for benzo(a)pyrene, benzo(b)fluoranthene, chrysene, and naphthalene. Groundwater analytical results are summarized in Table 2. Below is a summary of the groundwater analytical exceedances from the last groundwater sampling event.

- Benzo(a)pyrene concentrations exceeded the ES of 0.2 µg/l with concentrations ranging from 3.3 µg/l to 69 µg/l in temporary wells TW-7, TW-8, and TW-2 (August 2015) and ranging from 0.22 to 1.2 µg/l in monitoring wells MW-6 through MW-8. A groundwater benzo(a)pyrene isoconcentration map is presented as Figure 24. The highest concentrations were observed south and east of Building 11. The source of the benzo(a)pyrene, benzo(b)fluoranthene, chrysene is likely related to the fill material onsite. The source of naphthalene is likely related to the historical naphtha USTs that were located near MW-8.

## 5.3 Vapor Analytical and Sub-Slab Pilot Test Results

Near-slab and sub-slab vapor samples were collected to evaluate the potential for vapor intrusion into Buildings 11, 33, and 34 in December 2015. The location of the soil gas points is presented on Figure 2. The near-slab soil gas and sub-slab vapor point analytical results are presented in Tables 3 and 4, respectively. Below is a summary of the analytical results organized by building.

### *5.3.1 Building 11*

Seven near-slab soil gas points (SG-1 through SG-7) were installed and sampled on the north, east, and south sides of Building 11 on December 24, 2015. Shallow soil gas points were installed to collect vapor samples, oppose to installing sub-slab vapor points, since the water table intersects the basement of Building 11. The basement in Building 11 is approximately 8.5 feet below grade. The water table around Building 11 is as shallow as 5.5 feet below ground surface (bgs). The shallow soil gas analytical results were compared to the target sub-slab vapor risk screening levels (VRSLs). Below is a summary of the vapor analytical results.

- Benzene exceeded the VRSL of 120 micrograms per cubic meter (µg/m$^3$) at SG-1 (169 µg/m$^3$) located at the northwest corner of Building 11.

- PCE exceeded the VRSL of 1,400 µg/m$^3$ at SG-4 (9,400 µg/m$^3$) along the east central wall of Building 11.

### *5.3.2 Buildings 33 & 34*

Four sub-slab vapor points (VP-1 through VP-4) and three sub-slab vapor points (VP-5 through VP-7) were installed and sampled on November 23, 2015 within the footprints of Buildings 33 and 34, respectively.

- TCE exceeded the target sub-slab vapor risk screening level (VRSL) of 70 µg/m$^3$ at VP-1 (171 µg/m$^3$) and at VP-4 (219 µg/m$^3$) under Building 33.

- TCE exceeded the target sub-slab VRSL of 70 µg/m$^3$ at VP-5 (26,200 µg/m$^3$), VP-6 (41,600 µg/m$^3$), and VP-7 (3,950 µg/m$^3$) under Building 34. Concentrations of 1,2-dichloroethane also exceeded the target sub-slab VRSL of 37 µg/m$^3$ at VP-5 (88.8 µg/m$^3$) and VP-6 (74.6 µg/m$^3$).

Active vapor mitigation systems are proposed at Buildings 11, 33, and 34 and under the two new proposed buildings.

### 5.4 Soil Gas Results

KEY reviewed available soil boring logs from the environmental investigation activities and from geotechnical evaluations to determine where organic fill material was present to evaluate where the potential may exist for the collection and accumulation of methane gas. Minimal organic fill material was observed in the borings completed at the Site. Organic fill including wood was observed in borings B-1, GP-2, B-2, B-3, B-6, MW-1, MW-6, MW-9, MW-10, MW-14 through MW-16, SB-18, SB-21, SB-41, SB-44, SB-46, SB-50, SB-51, SB-55, SB-57, SB-63, SB-66, SB-67, SB-68, SB-71, SB-72, SB-74, SB-80, SB-81, and SB-87. These borings were located across the Site under landscaping, asphalt, and the buildings. Active vapor mitigation systems are proposed at Buildings 11, 33, and 34 to address the potential for vapor intrusion. Boring logs for the above referenced borings are presented in Appendix 3.

Three soil gas points (SG-8 through SG-10) were installed within the proposed building addition footprints to evaluate for the presence of methane. The location of the soil gas points is presented on Figure 2. The soil gas points were advanced using a Geoprobe Large Bore Soil Sampler. Soil samples were collected by driving a steel sampling rod (sampler) with acetate liners to 4 feet bgs using the hydraulic ram and hammer on the Geoprobe rig. Once the sampler reaches the desired depth, the sampler was opened by removing a stop pin in the sampler. The sampler was driven an additional footage to push a soil sample into the sampler, preserving the sample in a 1-inch by 5-foot acetate liner inside the sampler. The acetate sleeves will allow continuous collection of soil samples from each boring.

Soil samples were field screened for the presence of total ionizable VOC vapors using a calibrated photoionization detector (PID). The samples screened were warmed and the headspace PID reading of the soil was taken by inserting the probe end of the PID into the plastic bag through the seal.

A KEY scientist monitored the drilling activities and visually screened and described the condition and engineering properties of the soil. Soil descriptions and field screening PID results were recorded on Soil Boring Logs (WDNR Form 4400-122) in Appendix 3. The soil gas points were abandoned with bentonite.

The soil gas points were installed to 4 feet bgs with 3-foot, 10-slot Schedule 40 polyvinyl chloride screen and a 2-foot riser. The annular space was filled with coarse sand around the screen and hydrated bentonite to the surface. The PVC was capped with a PVC slip cap.

Two open and closed soil gas sampling events were completed at each soil gas point. The sampling events were completed on February 16 and 17, 2017 using a Landtec GEM5000 Gas Analyzer and a PID. The gas analyzer was used to measure methane, carbon monoxide, carbon dioxide, hydrogen sulfide, and oxygen. The PID was used to measure organic volatiles.

Prior to the collection of vapor readings, the integrity of the bentonite seal was verified at each soil-gas point. A 2-inch polyvinyl chloride fitting was used to create a small enclosure over the bentonite seal at the surface. Potable water was added to the enclosure and allowed to rest for 5 minutes. The water level in the enclosure confirmed to not drop, which confirmed the water was not infiltration through the bentonite seal.

The closed cap tests were completed by removing the PVC cap from the soil-gas point, sealing the top of the PVC with tape, and piercing a small hole in the tape for the insertion of the gas analyzer and PID stainless steel wand. Once the readings stabilized, the reading were recorded and the PID was affixed to the soil-gas point to measure for organic vapors. The open tests were completed by removing the field instruments, allow the soil-gas point to "vent" for five minutes, and the collecting readings as described above.

A summary of the gas analyzer and PID readings is presented in Table 5. No methane was measured from in the soil gas points. Elevated PID readings were observed in the closed tests at soil gas points SG-8 through SG-10 ranging from 9.4 parts per million (ppm) to 66.7 ppm. The PID readings dissipated when the open tests were performed. Soil will be excavated to a minimum of 4 feet bgs under the footprint of each proposed building addition and active sub-slab vapor mitigation systems will be installed to address vapor intrusion.

## 6.0 Summary of Investigation Findings and Conclusions

The following findings and conclusions are based on the environmental investigation data collected to date at the Site:

- The Wayne Pigment Corp. consists of two parcels with the addresses of 300 South Barclay Street and 139 East Oregon Street, in Milwaukee, Wisconsin. The Site is approximately 1.6 acres and is in an area of mixed industrial and residential land use.

- The topography of the Site is relatively flat, with an elevation ranging from approximately 588 to 590 feet amsl. However, there is a berm located in the southwest corner of the Site where the grade increases from approximately 589 feet to 604 feet amsl. An elevated rail line is present at the top of the berm.

- Fill material consisting of primarily silt with some sand, gravel, with intermixed debris is present to a depth of approximately 15 feet bgs. Underlying the fill material are three separate units including a 2 to 3-foot-thick organic silt layer, an approximately 24-foot-thick layer of fine to coarse sand with shell fragments, and interbedded silt and clay to a minimum of 45 feet bgs.

- Groundwater measured in Site monitoring wells generally ranged in depth from approximately 3.3 to 9.3 feet bgs, except for monitoring wells MW-11 through MW-13 located in the alley between 300 South Barclay Street and 214 East Florida Street where groundwater was encountered between approximately 9.8 and 12.9 feet bgs.

- Groundwater flow is generally to the east-northeast towards the Milwaukee River.

- A total of 146 soil borings have been advanced across the Site to date. Soil samples were laboratory analyzed for VOCs, PAHs, RCRA metals, trivalent chromium, and hexavalent chromium.

- Soil exceedances are present for petroleum and chlorinated VOCs, metals, and PAHs as follows:

    - Petroleum VOCs were detected at higher concentrations on the east side of the Site, while chlorinated VOCs were detected at higher concentrations on the west side of the Site.

    - RCL exceedances were generally detected from 0 to 10 feet bgs in the fill material.

    - The highest petroleum VOCs were detected borings B-10, B-36, and SB-82, SB-83, and SB-86. Boring B-10 is located near the northeast corner of Building 11. Borings B-36, and SB-82, SB-83, and SB-86 is located within the AST containment area. The source of the petroleum VOCs is attributed to the historical USTs and ASTs and railroad tracks that were used to deliver product to the tanks.

- The highest chlorinated VOCs were detected in borings MW-2, SB-24, SB-39, SB-49, SB-65, SB-67, SB-69, V-12, V-22, and V-37. These borings are located between Buildings 33 and 34, and under Building 34. The source of the chlorinated VOCs is attributed to poor housekeeping of solvent used during the production of lacquer and vanishes.

  A source removal excavation is proposed between Buildings 33 and 34 (where the building addition to connect Buildings 33 and 34 is proposed) and under Building 34, to remove a significant volume of mass, improve groundwater quality in the area, and reduce the vapor intrusion risk to the buildings. A barrier cap will also be installed over the area including the new proposed building addition and a landscaping.

- PAHs detected above the non-industrial direct contact RCLs included benzo(a)anthracene, benzo(a)pyrene, benzo(b)fluoranthene, benzo(k)fluoranthene, chrysene, dibenzo (a,h)anthracene, indeno(1,2,3-cd)pyrene, and naphthalene. PAHs were generally exceeded across the Site, which is likely attributed to the industrial fill present at the Site to depths up to approximately 15 feet bgs and on the surrounding properties.

- Arsenic exceeded the BTV of 8.0 mg/kg and non-industrial direct contact RCL of 0.677 mg/kg in 84 of the 102 soil samples analyzed. Arsenic concentrations reported above the BTV ranged from 8.1 to 56,000 mg/kg. The presence of arsenic is at least partially attributed to the industrial fill present at the Site and surrounding properties. Arsenic concentrations greater than 5,000 mg/kg were generally located where the historical PPG arsenic acid USTs and ASTs were located.

- Lead exceeded the background threshold value of 52 mg/kg in 76 of the 99 soil samples analyzed. Lead concentrations above the BTV ranged from 54.6 to 22,300 mg/kg. Lead also detected above the non-industrial direct contact RCL of 400 mg/kg in 34 of the 99 soil samples. The presence of lead is at least partially attributed to the industrial fill present at the Site and surrounding properties. The highest lead concentrations were observed under Building 11, south of Building 11 where the historical PPG USTs and ASTs were located, and east of Building 11 where the two railroad tracks that were historically used for the delivery of product to the USTs and ASTs are located, under the elevated railroad spur north of Building 35, and west of Building 33 in the parking lot.

- Total chromium exceeded the BTV of 44 mg/kg in 58 of the 100 soil samples analyzed. Total chromium concentrations above the BTV ranged from 44 to 33,000 mg/kg. Hexavalent chromium concentrations ranged from 1.5 to 99.1 mg/kg, compared to a non-industrial direct contact RCL of 0.293 mg/kg. The highest total chromium and hexavalent chromium concentrations were observed under the southeast corner of Building 11, south of Building 11 where the historical PPG USTs and ASTs were located, and east of Building 11 where the two railroad tracks that were historically used for the delivery of product to the USTs and ASTs are located.

- Cadmium and mercury were also detected above their respective non-industrial direct contact RCLs, but at significantly lower concentrations than arsenic, chromium, and lead.

- The current monitoring well network includes 19 monitoring wells (MW-1 through MW-13, MW-14R, and MW-15 through MW-19) and one piezometer (PZ-1). Groundwater samples have been laboratory analyzed for VOCs, PAHs, and dissolved RCRA metals, total chromium, trivalent chromium, and hexavalent chromium.

- Groundwater exceedances are present in the Site monitoring wells for petroleum and chlorinated VOCs, PAHs, and metals as follows.

  - Petroleum VOCs including benzene, ethylbenzene, naphthalene, toluene, total trimethylbenzenes, and total xylenes exceeded their respective ESs at the Site. The exceedances were primarily detected in wells located south and east of Building 11. The source of petroleum constituents in groundwater is likely related to the historical USTs that were located near MW-4 and MW-8 and the railroad tracks that delivered raw material to the Site.

  - Chlorinated constituents including TCE, 1,1,1-TCA, 1,1-dichloroethene (1,1-DCE), methylene chloride, and vinyl chloride exceeded their respective ESs at the Site. Elevated acetone was also exceeded in southeast corner of Building 33. The exceedances were primarily detected at monitoring wells MW-1, MW-2, and MW-19 located on the east of side of the Site near Buildings 33 and 34 where varnish and lacquer were manufactured.

  - Dissolved arsenic and total chromium were the primary metals exceeded in groundwater. Dissolved arsenic concentrations exceeded the ES of 10 µg/l with concentrations ranging from 15.8 µg/l to 507,000 µg/l. The elevated arsenic is located south of Building 11 where the arsenic acid tanks were located and where raw material was delivered via rail lines. Total chromium concentrations exceeded the ES of 100 µg/l with concentrations ranging from 121 µg/l to 15,000 µg/l. The elevated chromium was detected at TW-86 south of Building 11 where the bichromate tanks were located and where raw material was delivered via rail lines.

    An injection of ZVI is proposed in the area of elevated arsenic and chromium under the footprint of the former AST containment area and partially under the footprint of the proposed building addition south of Building 11. ZVI has been proposed to reduce the dissolved metal concentrations and limit further migration of the dissolved phase mass by precipitating metals from the groundwater. A barrier cap will also be installed over the area including the new proposed building addition and an asphalt surface.

  - One or more PAHs exceeded their respective ESs at monitoring wells MW-6 through MW-8 and MW-10 for benzo(a)pyrene, benzo(b)fluoranthene, chrysene, and naphthalene. The highest concentrations were observed south and east of Building 11. The source of the

benzo(a)pyrene, benzo(b)fluoranthene, chrysene is likely related to the fill material onsite. The source of naphthalene is likely related to the historical naphtha USTs that were located near MW-8.

- Seven near-slab soil gas points (SG-1 through SG-7) were installed and sampled on the north, east, and south sides of Building 11. Four sub-slab vapor points (VP-1 through VP-4) and three sub-slab vapor points (VP-5 through VP-7) were installed and sampled within the footprints of Buildings 33 and 34. Benzene exceeded the VRSL of 120 µg/m$^3$ at SG-1 (169 µg/m$^3$) located at the northwest corner of Building 11 and tetrachloroethene exceeded the VRSL of 1,400 µg/m$^3$ at SG-4 (9,400 µg/m$^3$) along the east central wall of Building 11. TCE exceeded the target sub-slab VRSL VP-1 and VP-4 under Building 33. TCE and/or 1,2-DCA exceeded the target sub-slab VRSL at VP-5, VP-6, and VP-7 under Building 34. Based on the exceedances of the VRSLs, active sub-slab vapor mitigation systems will be installed in Buildings 11, 33, and 34.

- Three soil gas points (SG-8 through SG-10) were installed within the proposed building addition footprints to evaluate for the presence of methane. No methane was measured from in the soil gas points. Elevated PID readings were observed in the closed tests at soil gas points SG-8 through SG-10 ranging from 9.4 ppm to 66.7 ppm. Soil will be excavated to a minimum of 4 feet bgs under the footprint of each proposed building addition and active sub-slab vapor mitigation systems will be installed to address vapor intrusion.

## 7.0 EXEMPTION CRITERIA EVALUATION

### 7.1 Proposed New Development

The proposed new Site development will include construction of two building additions including a two-story, slab-on-grade, building addition south of Building 11 located at 300 South Barclay Street and a three-story, slab-on-grade building addition to connect Buildings 33 and 34 located at 139 East Oregon Street. Additionally, the redevelopment will include replacement of the asphalt surface west of Building 33, removal of the horizontal component to the elevated rail line located south of Building 34, removal of the concrete containment structure south of Building 11, clearing, grubbing, and replacement of landscaped areas, maintenance of existing landscaped areas, abandonment of underground utilities, and replacement of utilities. The locations of these improvements are presented on draft construction plans in Appendix 2 and shown on Figures 3 and 4.

### 7.2 General

The environmental investigation data and Geotechnical Engineering Report prepared by GESTRA Engineering Inc. dated March 2017 were used to determine a construction methodology which would meet the WDNR criteria for granting exemptions to construct on historic fill (GESTRA, 2017). The construction methods and an evaluation of each exemption criteria are documented in this section. A copy of the Geotechnical Engineering Report is presented in Appendix 4.

### 7.3 Settlement Considerations

A total of two (2) borings were advanced including one boring within the footprint of the proposed building additions. Boring GT-1 was advanced between Buildings 33 and 34 to a depth of 121 feet bgs and boring GT-2 was advanced south of Building 11 to a depth of 101 feet bgs for geotechnical evaluation. Fill material was observed to depths ranging from 13 to 17 feet bgs. The fill material consisted of a mixture of silt, sand, and clay with “foundry material” were observed in the upper 6 to 8 feet. Native soil generally consisted of a layer of peat/elastic silt overlying very loose to loose sand. At an approximate depth of 28 feet to 33 feet the very loose to loose sand transitioned to soft elastic silt which extend to a depth of 73 feet. At 73 feet, the soils transitioned to medium dense to dense sand/silt to 93 feet. At 93 feet, a 10-foot thick clay layer was observed in both boreholes and in boring GT-1 the soils transitioned back to medium dense silty sand/sandy/silt at 103 feet.

The foundation design will consist of helical piers. Midwest Drilled Foundations & Engineering, Inc. (Midwest) will complete the helical pier design and installation. The current helical pier design will consist of three flights, (8 inch, 10 inch, and 12 inch) with an allowable capacity of 25 kips. Midwest estimated the piers will need to be installed to an approximate depth between 85 feet to 90 feet based on the soil borings provided by GESTRA. To eliminate the potential for buckling, the helical piers will either be installed in a grout column to stiffen the shaft or the shaft will be upsized.

## 7.4 Building Foundation and Floor Slabs

Based on the geotechnical boring locations and a review of the interior structural support columns in the existing buildings, Buildings 11, 33, and 34 are assumed to be pile-supported through the interior structural columns. The building concrete floors are tied to the exterior walls. The existing structural supports and concrete floors will remain in-place as part of the Site redevelopment.

Due to the presence of poor geotechnical qualities of the subsurface soils, the two building additions proposed to connect Buildings 33 and 34 and the south of Building 11, will constructed as slab-on-grade construction supported with helical piers. The current helical pier design will consist of three flights, (8 inch, 10 inch, and 12 inch) with an allowable capacity of 25 kips. Midwest estimated the piers will need to be installed to an approximate depth between 85 feet to 90 feet based on the soil borings provided by GESTRA. To eliminate the potential for buckling, the helical piers will either be installed in a grout column to stiffen the shaft or the shaft will be upsized.

## 7.5 Pavement and Landscaping

The existing pavement west of Building 33 and south of Building 11 will remain. The asphalt and subbase material west of Building 33 will likely be removed and replaced. The pavement subgrades may be proofrolled prior to commencement of actual paving operations. The asphalt will serve as a barrier cap.

The current areas of landscaping will remain including the area south of Building 34 and the area west of the Building 11 asphalt. Additional areas will be landscaped including an area north of Building 34, a strip west of Building 33, west and south of the Building 11 proposed addition, and areas west and south of Building 11 asphalt surface. The landscaped areas will serve as a barrier cap.

The barrier cap for the landscaped areas will include a 1.5-foot soil cap for areas that will be landscaped. A warning layer consisting of orange or other bright color snow fence, or similar permeable material, will be installed between the impacted soil and overlying clean soil cap. The soil cap will be extended to 3 feet deep and a minimum of 4 feet by 4 feet horizontally where a tree or root ball is greater than 1.5 feet is proposed to eliminate the concern of encountering impacted soil during planting. Imported clay and topsoil will be laboratory analyzed for VOCs, PAHs, and RCRA metals to verify the material is acceptable for use onsite. Laboratory analysis of the material will be completed prior to importing the material to the Site.

## 7.6 Utilities

The existing Site utilities will be abandoned in accordance with the City of Milwaukee code requirements. New utilities will be installed under South Barclay Street, East Oregon Street, and onsite. All new utilities associated with the buildings and parking lots will be installed with clay plugs, anti-seep collars, or utility boots where the utilities are located below the water table.

Surface water runoff will be managed by proper site grading and routing water to onsite stormwater manholes connected to City of Milwaukee combined stormwater/sewer lines.

## 7.7 Methane and Toxic Gas Considerations

KEY reviewed available soil boring logs from the environmental investigation activities and from the geotechnical boring logs to determine where organic fill material was present to evaluate where the potential may exist for the collection and accumulation of methane gas. Organic fill material was observed across the Site under landscaping, asphalt, and the buildings.

Three soil gas points were installed within the footprint of the two proposed building additions. The soil gas points were screened using a gas analyzer and PID. No methane was measured from in the soil gas points. Elevated PID readings were observed in the closed tests at soil gas points SG-8 through SG-10 ranging from 9.4 ppm to 66.7 ppm. Soil will be excavated to a minimum of 4 feet bgs under the footprint of each proposed building addition and active sub-slab vapor mitigation systems will be installed to address vapor intrusion.

Active vapor mitigation systems are proposed at Buildings 11, 33, 34, and under the two proposed building additions to address the potential for vapor intrusion.

### *7.7.1 Building 11 Active Vapor Mitigation System Design*

The active vapor mitigation systems design for Buildings 11, 33, and 34 is presented on Figures 25 through 28. The active vapor system designs were discussed with Ms. Alyssa Sellwood of the WDNR in April 2017. Below is a brief description of the system design:

- An active system will be installed over the existing concrete basement floor in Building 11 and existing first floor concrete slab in Buildings 33 and 34.
- Four inches of clear 1-inch stone will be placed over the existing concrete floors with 3-inch corrugated drain tile laid in the stone. The drain tile will be placed approximately 1-foot from the interior building walls forming a rectangle. One length of drain tile will also be connected to this perimeter drain tile from wall to wall for every 2,500 square feet of floor space.
- The drain tile will be vertically extended and connected to 4-inch PVC solid pipe through building interior walls and penetrate the roofline. A vapor barrier boot will be placed around the vertical extensions and taped to create a seal. Radonaway RP380 fans will be connected to the PVC roof penetrations.
- Geotextile fabric will be placed over the entire layer of clear stone and topped with a minimum of two inches of engineered fill (traffic bond).
- A new concrete floor will be poured over the engineering fill (minimum of four inches thick).
- Each vertical PVC floor penetration will have a monitoring point installed. The monitoring points will have a u-tube manometer to measure pressure from the fans and pitot tube to measure air flow and potentially sample vapor between the two concrete slabs.
- Two vacuum tubes will be installed for every 2,000 square feet of floor space. One vacuum tube will be installed between concrete floors to measure the differential pressure between the interstitial space (to prove depressurization) and the original floor slab. A second vacuum tube will be installed beneath the original floor slab to measure the differential pressure between the original floor slab and the interstitial space.

- A new sump will be installed as a backup measure to drain water in the clear stone layer between the original floor slab and new slab, if water should collect.

### *7.7.2 Building 11 Sumps and Basement Walls*

The basement of Building 11 partially penetrates the water table. The sumps in Building 11 are proposed to be abandoned with a flowable fill (slurry or concrete) and topped with concrete level with the floor. The exterior basement walls of Building 11 are water-proofed. Based on observations from the interior walls, there are no cracks, seams, weeping, or florescence from water.

Buildings 33 and 34 are slab-on-grade construction with no basements.

### *7.7.3 Elevator Shafts*

There is currently one elevator shaft in Building 11, 33, and 34. The elevator shaft floors will be removed and replaced with a new concrete floor. A closed sump will be installed at the base of each elevator shaft. The interior of the elevator shafts will be sealed with water-proof paint. Fire code for elevator shafts prohibits the installation of interior pipes and wall penetrations.

### *7.7.4 Building Addition Active Vapor Mitigation System Design*

Active vapor mitigation systems will be installed under the two proposed building additions between Buildings 33 and 34 and south of Building 11. Active vapor mitigation system design is presented on Figure 29. The active vapor system design was discussed with Ms. Alyssa Sellwood of the WDNR in April 2017. Below is a brief description of the system design:

- An active system will be installed under the slab-on-grade construction for the two building additions.
- Minimum of four inches of clear 1-inch stone will be placed under the proposed new concrete floor with 3-inch corrugated drain tile laid in the stone. The drain tile will be placed approximately 1-foot from the interior building walls forming a rectangle. One length of drain tile will also be connected to this perimeter drain tile from wall to wall for every approximately 2,500 square feet of floor space, or less.
- The drain tile will be vertically extended and connected to 4-inch PVC solid pipe through building interior walls and penetrate the roofline. A vapor barrier boot will be placed around the vertical extensions and taped to create a seal. Radonaway RP380 fans will be connected to the PVC roof penetrations.
- Geotextile fabric will be placed over the entire layer of clear stone and topped with a minimum of two inches of engineered fill (traffic bond).
- A new concrete floor will be poured over the engineering fill (minimum of four inches thick).
- Each vertical PVC floor penetration will have a monitoring point installed. The monitoring points will have a u-tube manometer to measure pressure from the fans and pitot tube to measure air flow and potentially sample vapor between the two concrete slabs.
- One vacuum tube will be installed for every approximately 2,000 square feet of floor, or less, space to measure the differential pressure between occupied space and original floor slab.

## 7.8 Site Worker Safety Considerations

The potential exposure to waste will be addressed by incorporating applicable health and safety measures and using properly trained workers equipped with applicable personal protective equipment.

## 7.9 Waste Handling Plan

Construction activities will require the management of impacted soil. Impacted soil will be encountered Proposed activities will include excavation for installation of new building foundations, clearing, grubbing, and replacement of landscaped areas with a barrier cap, maintenance of existing landscaped areas, abandonment of underground utilities, and replacement of utilities. Hazardous waste determinations (HWD) will be prepared and submitted to the WDNR for review and approval. HWD will be made for the areas where impacted soil will be excavated. The HWD will include drawings to demonstrate where and what construction activities will be completed, soil analytical results to demonstrate the soil has been properly characterized, and where the soils will be disposed offsite.

## 8.0 CONCLUSIONS

Based on the results of the WDNR exemption criteria evaluation, the proposed construction will not result in an unacceptable risk to human health or safety or the environment. PPG GP LLC requests an exemption from applicable NR 500 solid waste regulations. It is understood that the exemption will be contingent on implementation of the following:

- Residual VOC, PAH, and metal concentrations presents a direct contact risk at the Site. The existing buildings, asphalted surfaces, and landscaped areas will serve as a barrier cap to limit the potential for direct contact and infiltration of groundwater for the Site.

- Based on the presence of elevated petroleum and chlorinated VOCs in soil, groundwater, and vapor, active sub-slab vapor mitigation systems will be installed under the proposed building additions and in the Buildings 11, 33, and 34.

- Construction activities will require the management of impacted soil. HWD will be prepared and submitted to the WDNR for review and approval for impacted soil that will be excavated. The HWD will include drawings to demonstrate where and what construction activities will be completed, soil analytical results to demonstrate the soil has been properly characterized, and where the soils will be disposed offsite.

## 9.0 GENERAL QUALIFICATIONS

Our study was performed using the degree of care and skill ordinarily exercised under similar circumstances, by environmental consultants practicing in this or similar localities. No other warranty or guarantee, expressed or implied, is made as to the conclusions and recommendations included in this report.

The findings of this report, to the best of knowledge, are valid as of the date of this study. However, changes in the conditions of a property can occur with the passage of time, whether due to natural processes or the works of man on this or adjacent properties. In addition, changes in applicable or appropriate standards may occur, whether they result from legislation, from the broadening of knowledge or from other reasons. Accordingly, the findings of this report may be invalidated wholly or partially by changes outside our control.

Specified information contained in this report has been obtained from publicly available sources and other secondary sources of information produced by entities other than Key Engineering Group, Ltd. Although care has been taken by Key Engineering Group, Ltd. in compiling this information, Key Engineering Group, Ltd. disclaims any and all liability for any errors, omissions or inaccuracies of the third parties in such disclaims formation and data.

This report was prepared for PPG GP LLC. The report is the property of PPG GP LLC and Key Engineering Group, Ltd., and cannot be used without written consent from each party.

## 10.0 REFERENCES


Drake Environmental Inc. Phase I Environmental Site Assessment. 300 South Barclay Street Milwaukee WI. February 24, 2006.

Drake Environmental Inc. Site Investigation/Case Closure Request. Wayne Pigment Corp. 300 South Barclay Street Milwaukee WI. October 28, 2009.

Drake Consulting Group LLC. Off Site Assessment/Investigation Status Report for the Property Located at 214 East Florida Street. March 18, 2011.

Drake Consulting Group LLC. Case Closure and Addendum to October 2009 Site Investigation/Closure Report. October 4, 2011.

Drake Environmental. DRAFT WDNR Requested Supplemental Information in Response to the WDNR's October 27, 2011 Case Closure Denial Letter for the WPC Technologies Inc. Site located at 300 South Barclay Street in Milwaukee Wisconsin. February 3, 2012.

Drake Consulting Group LLC. Proposed Scope of Work for WDNR-Requested Additional Investigation Activities. July 13, 2012.

Drake Environmental. Email Wayne Pigment Site-Proposed Scope of Work to WDNR. August 15, 2012.

Key Engineering Group Ltd. Phase I Environmental Site Assessment 300 South Barclay Street & 139 East Oregon Street Milwaukee Wisconsin. June 26, 2015.

Key Engineering Group Ltd. Phase II Environmental Site Assessment 300 South Barclay Street Milwaukee Wisconsin. September 17, 2015.

Key Engineering Group Ltd. Site Investigation Report and Remedial Action Plan 300 South Barclay Street & 139 East Oregon Street Milwaukee Wisconsin. April 7, 2016.

Key Engineering Group Ltd. Supplemental Site Investigation Report and Remedial Action Plan 300 South Barclay Street & 139 East Oregon Street Milwaukee Wisconsin. January 31, 2017.

Key Engineering Group Ltd. WDNR Site Investigation/Remedial Action Plan Review May 18, 2016 Letter 300 South Barclay Street & 139 East Oregon Street Milwaukee Wisconsin. January 31, 2017.

United States Geological Survey. Milwaukee Wisconsin. 7.5 Minute Quadrangle Map. 1971.

Wisconsin Department of Agriculture Trade and Consumer Protection. Interactive Web Map. Website: https://datcpgis.wi.gov/maps/?viewer=wcr. Accessed December 2, 2015.

Wisconsin Department of Natural Resources. Case Closure Denial Wayne Pigment Corp. 300 S. Barclay St. Milwaukee WI. December 7, 2009.

Wisconsin Department of Natural Resources. Case closure denial Wayne Pigment Corp. 300 S. Barclay St Milwaukee WI. December 7, 2009.

Wisconsin Department of Natural Resources. Case closure denial Wayne Pigment Corp. 300 S. Barclay St Milwaukee WI. October 27, 2011.

Wisconsin Department of Natural Resources. Review response to Drake Consulting Group's August 11, 2012 Response to WDNR's October 27, 2011 Case Closure Denial Letter for the WPC Technologies Inc. Site. May 7, 2012.

Wisconsin Department of Natural Resources. Correspondence/Memorandum Rationale for No Action Required determination. July 17, 2012.

Wisconsin Department of Natural Resources. Email RE: Wayne Pigment Site-Proposed Scope of Work. August 15, 2012.

Wisconsin Administrative Code. Chapter NR 140 Groundwater Quality Standards.

Wisconsin Administrative Code. Chapter NR 141 Monitoring Well Installation Procedures.

Wisconsin Administrative Code. Chapter NR 600 Hazardous Waste Management.

Wisconsin Administrative Code. Chapters NR 700 Investigation and Remediation of Environmental Contamination.

H:\PROJECTS\2017\1701-0785 Barclay\1701-0785-0001-GEO\1701-0785-0001 Build on Historic Fill Site Exemption.doc

# Figures

Key Engineering Group, Ltd.

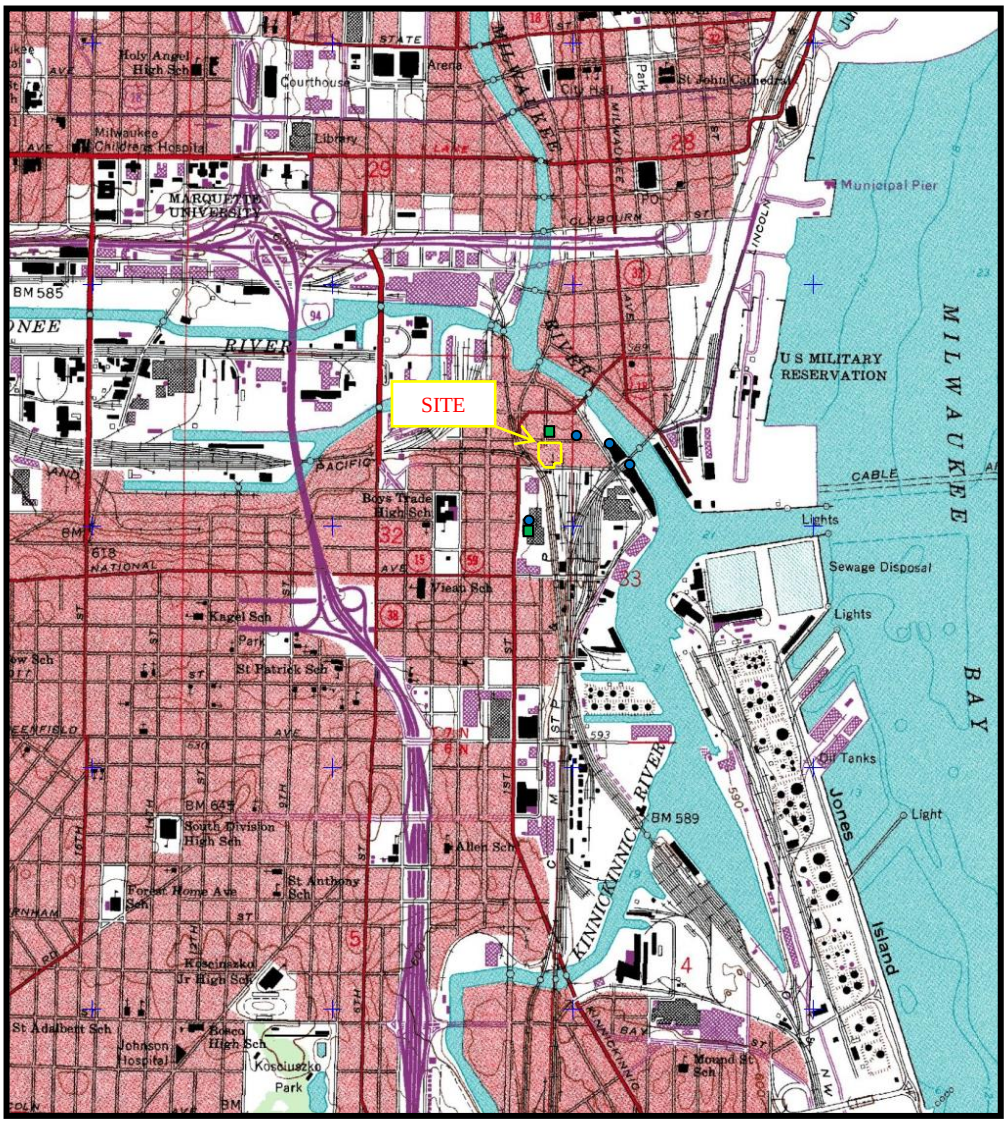


1:24000 scale

0 0.2 0.4 0.6 0.8 1 Miles

0 0.2 0.4 0.6 0.8 1 Kilometers

- Water Supply Well
- Test Boring

| | | | |
|---|---|---|---|
| Location: Milwaukee, Wisconsin | Map Year: 1971 | FIGURE 1<br>SITE LOCATION MAP<br>WAYNE PIGMENT CORP<br>300 SOUTH BARCLAY STREET<br>AND 139 EAST OREGON STREET<br>MILWAUKEE, WISCONSIN | KEY ENGINEERING GROUP LTD. |
| Project: 2505019 | Date: 2/3/2016 | | |
| N W E S | Scale: 1:24000 | | |
| | Series: 7.5 Minute Quadrangle | | |

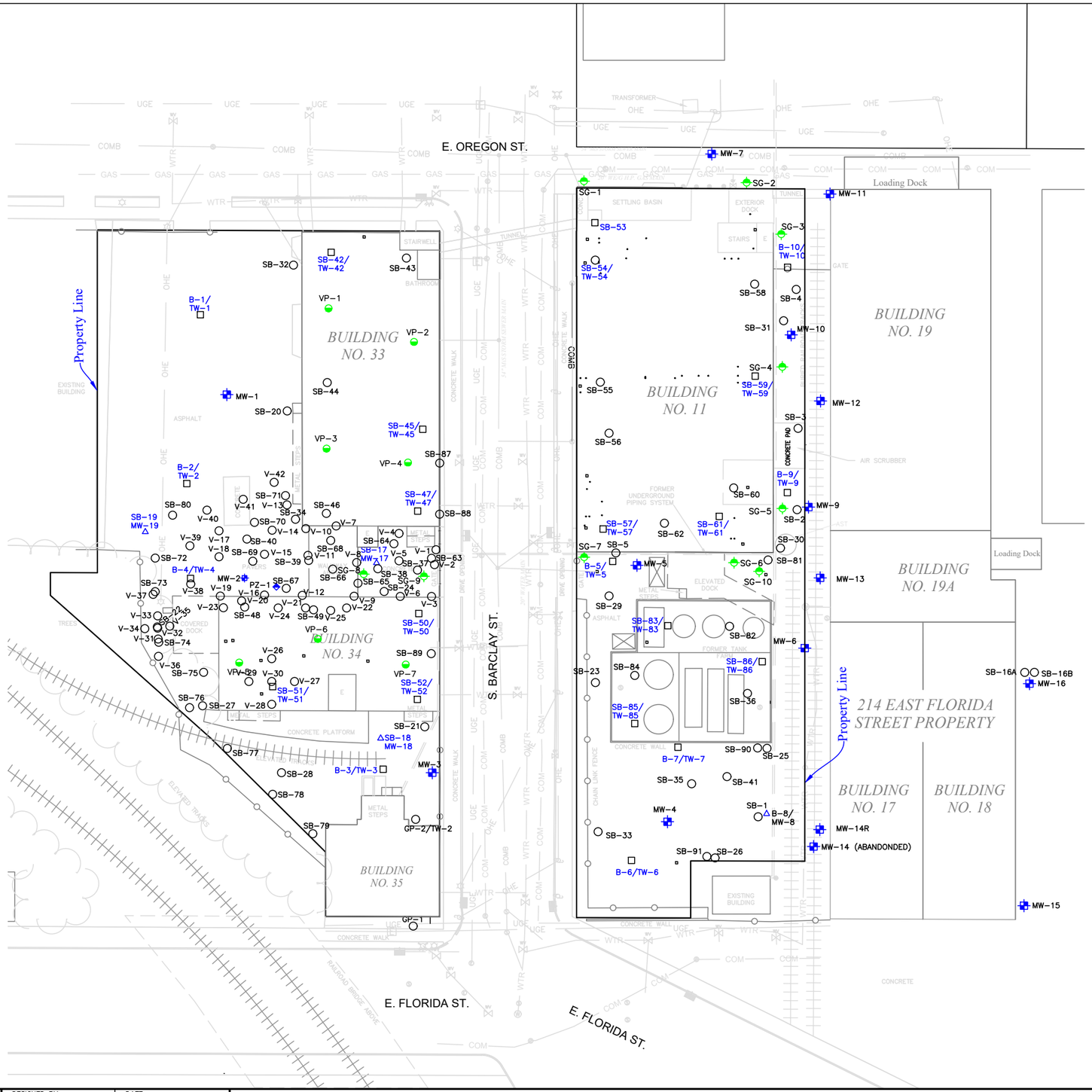


## LEGEND

- SOIL PROBE LOCATION
- TEMPORARY WELL / SOIL BORING
- MONITORING WELL / SOIL BORING
- PIEZOMETER LOCATION
- NEAR SLAB SOIL GAS LOCATION
- SUB-SLAB VAPOR POINTS
- MONITORING WELL LOCATION
- E ELEVATOR
- SUMP

| REVISION NO. | DESCRIPTION | DATE | BY |
|---|---|---|---|
| | | | |

| | |
|---|---|
| DESIGNED BY TLS | DATE 6/29/17 |
| DRAWN BY RJN | DATE 6/29/17 |
| APPROVED BY KWW | DATE 6/29/17 |

CADFILE G:\ACAD\2505019 - 300 S Barclay st\2017-6-29\BASE FILE BIG.dwg
XREF
LMAN

# FIGURE 2
# SITE LAYOUT MAP
# WAYNE PIGMENT CORPORATION
## 300 SOUTH BARCLAY STREET
## MILWAUKEE, WISCONSIN

KEY ENGINEERING GROUP LTD.
735 NORTH WATER STREET, SUITE 510
MILWAUKEE, WI 53202
414.224.8300 (tel) • 414.224.8383 (fax)

KEY PROJECT NUMBER 2505019
SCALE 1" = 50'
SHEET NUMBER

Jul 11, 2017 - 9:37am G:\ACAD\2505019 - 300 S Barclay st\2017-6-29\BASE FILE BIG.dwg

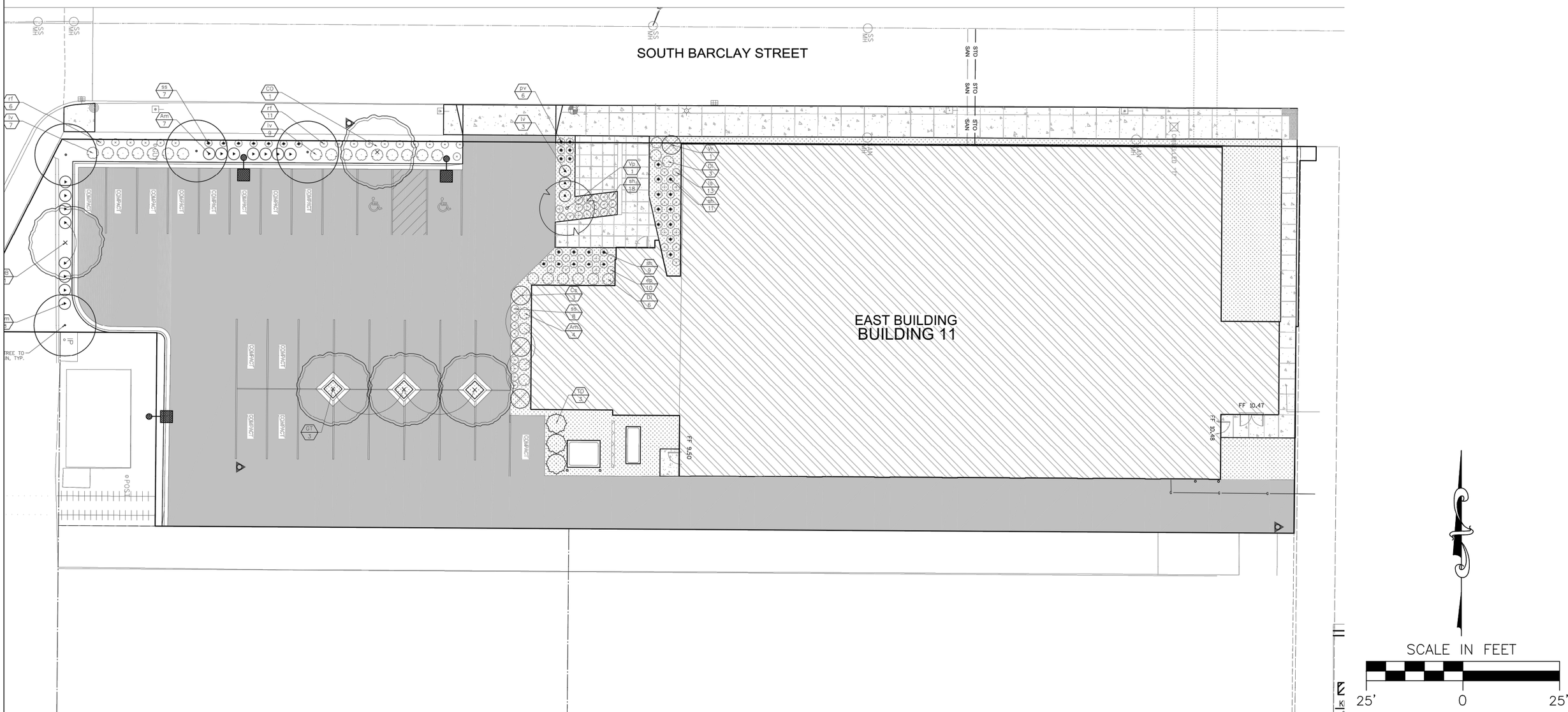


| REVISION NO. | DESCRIPTION | DATE | BY |
|---|---|---|---|
| | | | |

| | |
|---|---|
| DESIGNED BY TLS | DATE 6/29/17 |
| DRAWN BY RJN | DATE 6/29/17 |
| APPROVED BY KWW | DATE 6/29/17 |

CADFILE G:\ACAD\2505019 – 300 S Barclay st\2017-6-29\BASE FILE BIG.dwg
XREF
LMAN

# FIGURE 3
# CONCEPTUAL SITE LAYOUT EAST OF SOUTH BARCLAY STREET
# WAYNE PIGMENT CORPORATION
## 300 SOUTH BARCLAY STREET
## MILWAUKEE, WISCONSIN

KEY ENGINEERING GROUP LTD.
735 NORTH WATER STREET, SUITE 510
MILWAUKEE, WI 53202
414.224.8300 (tel) • 414.224.8383 (fax)

KEY PROJECT NUMBER 2505019
SCALE 1" = 50'
SHEET NUMBER

Jul 11, 2017 – 9:37am G:\ACAD\2505019 – 300 S Barclay st\2017-6-29\BASE FILE BIG.dwg

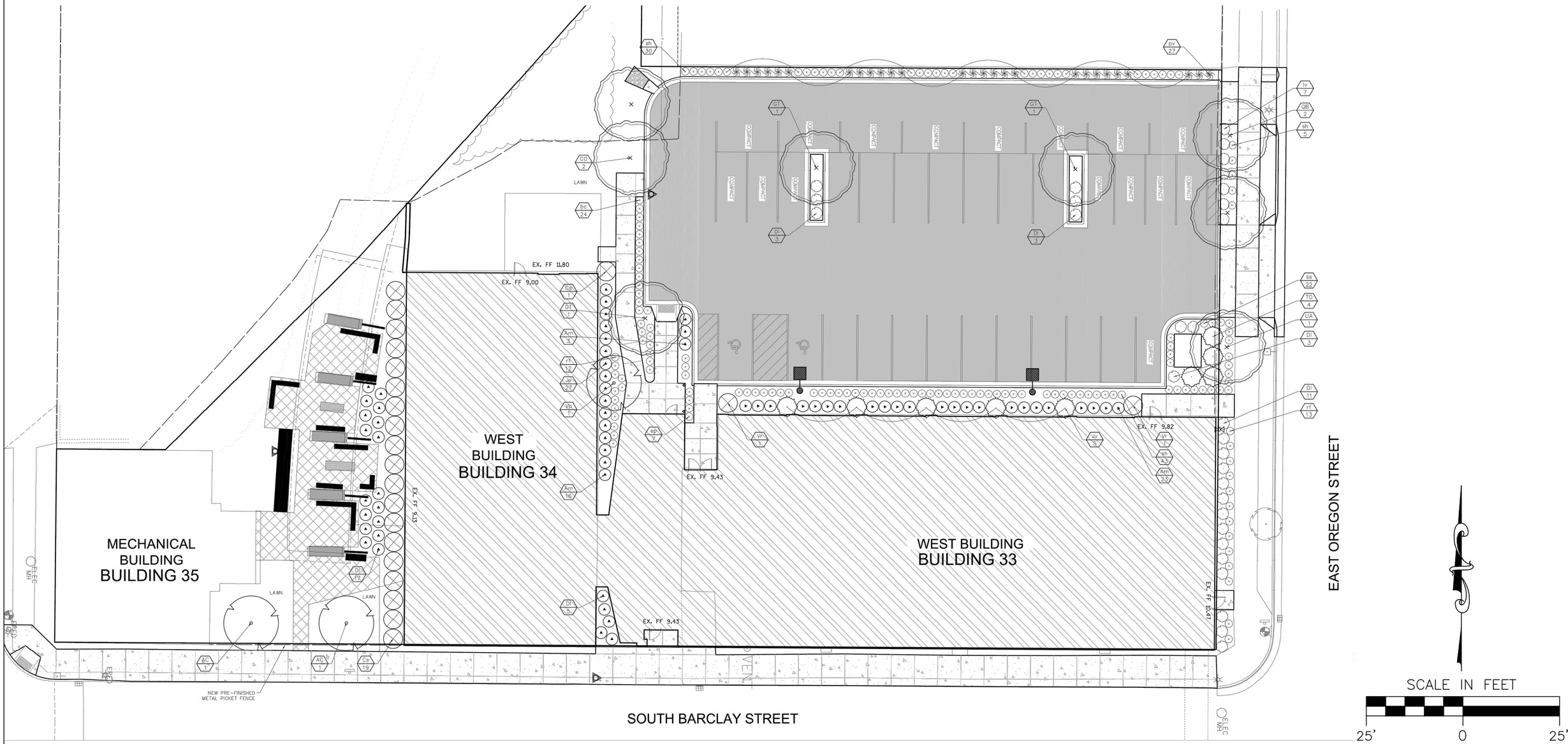


| REVISION NO. | DESCRIPTION | DATE | BY |
|---|---|---|---|
| | | | |

| | |
|---|---|
| DESIGNED BY TLS | DATE 6/29/17 |
| DRAWN BY RJN | DATE 6/29/17 |
| APPROVED BY KWW | DATE 6/29/17 |
| CADFILE G:\ACAD\2505019 – 300 S Barclay st\2017-6-29\BASE FILE BIG.dwg | |
| XREF | |
| LMAN | |

# FIGURE 4
# CONCEPTUAL SITE LAYOUT WEST OF SOUTH BARCLAY STREET
# WAYNE PIGMENT CORPORATION
## 300 SOUTH BARCLAY STREET
## MILWAUKEE, WISCONSIN

KEY ENGINEERING GROUP LTD.
735 NORTH WATER STREET, SUITE 510
MILWAUKEE, WI 53202
414.224.8300 (tel) - 414.224.8383 (fax)

KEY PROJECT NUMBER 2505019

SCALE 1" = 50'

SHEET NUMBER

Jul 11, 2017 – 9:37am G:\ACAD\2505019 – 300 S Barclay st\2017-6-29\BASE FILE BIG.dwg

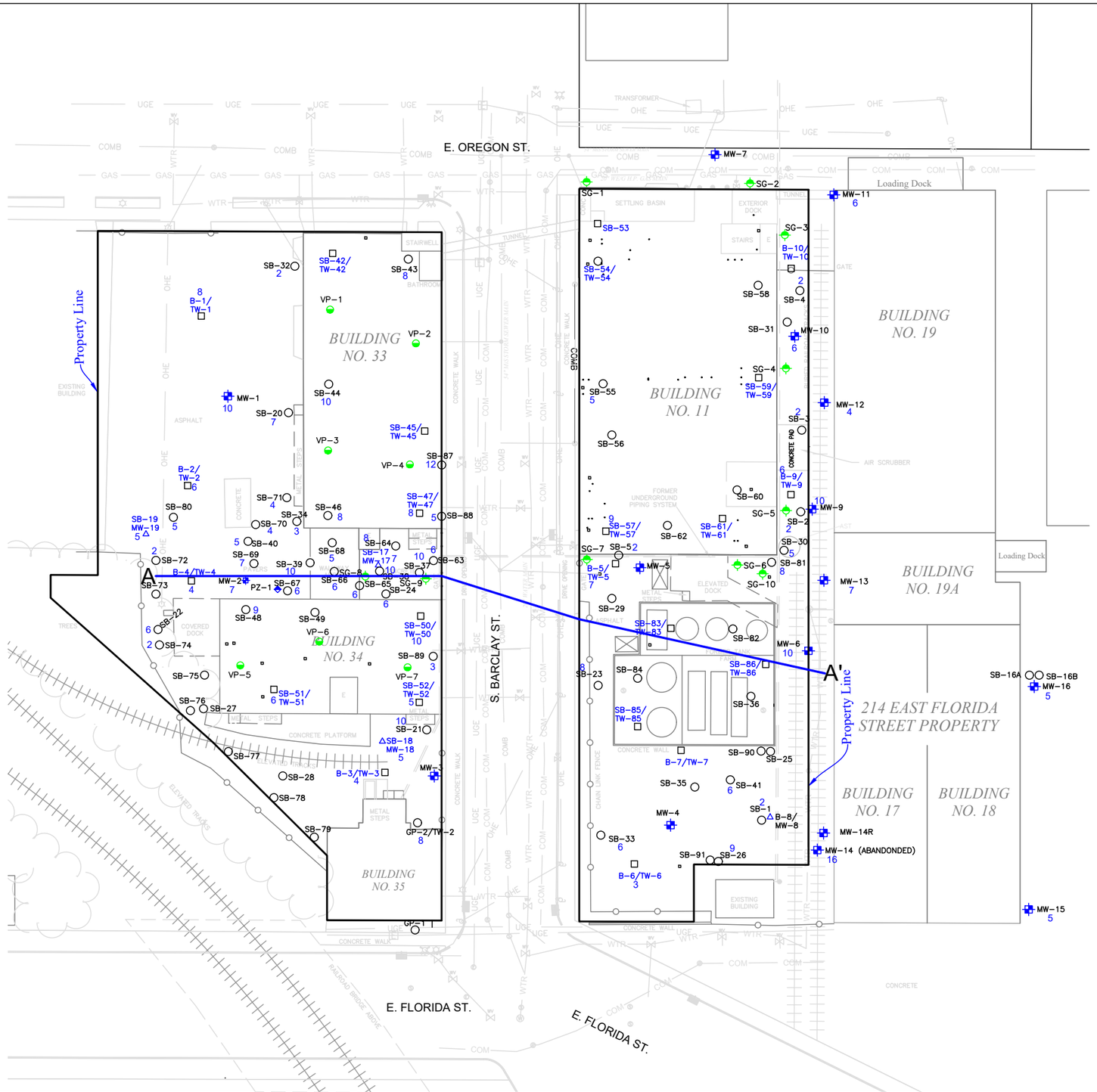


# LEGEND

- SOIL PROBE LOCATION
- TEMPORARY WELL / SOIL BORING
- MONITORING WELL / SOIL BORING
- PIEZOMETER LOCATION
- NEAR SLAB SOIL GAS LOCATION
- MONITORING WELL LOCATION
- A—A' LOCATION OF GEOLOGIC CROSS SECTION
- ESTIMATED EXTENT OF FILL MATERIAL
- 8 DEPTH, IN FEET, OF DEBRIS OBSERVED IN BORING OR WELL LOCATION.
- SUB-SLAB VAPOR POINTS
- E ELEVATOR
- SUMP

NOTE:
DEBRIS OBSERVED INCLUDED SLAG, GLASS, BRICK, FOUNDRY SAND, CRUSHED CONCRETE, & COAL FRAGMENTS.

SCALE IN FEET

50' 0 50'

| REVISION NO. | DESCRIPTION | DATE | BY |
|---|---|---|---|
| | | | |

| | |
|---|---|
| DESIGNED BY TLS | DATE 6/29/17 |
| DRAWN BY RJN | DATE 6/29/17 |
| APPROVED BY KWW | DATE 6/29/17 |
| CADFILE G:\ACAD\2505019 – 300 S Barclay st\2017-6-29\BASE FILE BIG.dwg<br>XREF<br>LMAN | |

# FIGURE 5
## LOCATION OF GEOLOGIC CROSS SECTION & ESTIMATED EXTENT OF FILL MATERIAL
## WAYNE PIGMENT CORPORATION
### 300 SOUTH BARCLAY STREET
### MILWAUKEE, WISCONSIN

KEY ENGINEERING GROUP LTD.
735 NORTH WATER STREET, SUITE 510
MILWAUKEE, WI 53202
414.224.8300 (tel) • 414.224.8383 (fax)

KEY PROJECT NUMBER 2505019
SCALE 1" = 50'
SHEET NUMBER

Jul 11, 2017 – 9:37am G:\ACAD\2505019 – 300 S Barclay st\2017-6-29\BASE FILE BIG.dwg

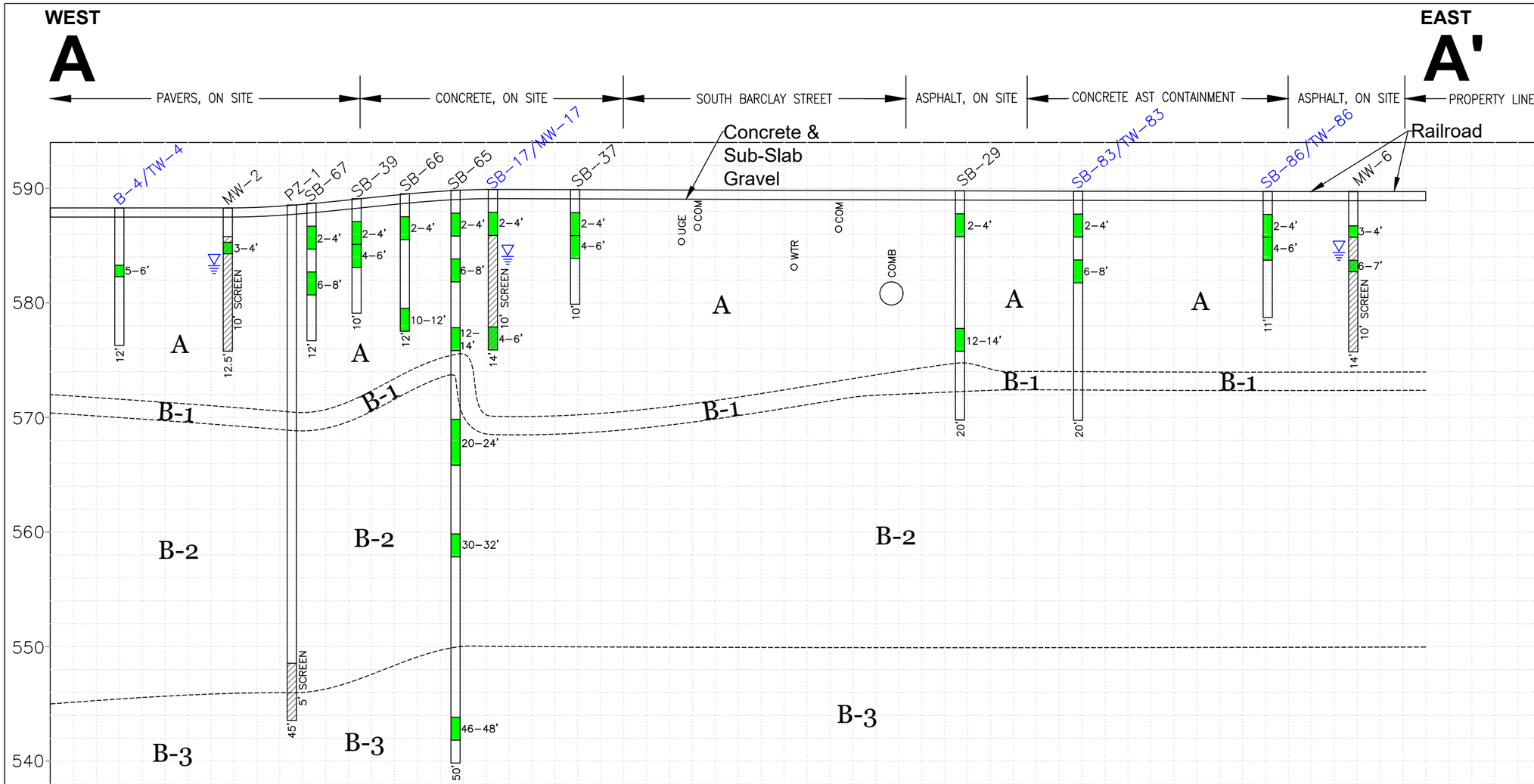


## LEGEND

| | |
|---|---|
| mg/kg | Milligrams per Kilogram |
| ug/L | Micrograms per Liter |
| GW | Groundwater |
| As | Arsenic |
| HexCr | Hexavalent Chromium |
| Pb | Lead |
| TCE | Trichloroethene |
| TCr | Total Chromium |
| TriCr | Trivalent Chromium |
| COM | Communication Utility Line |
| COMB | Combined Storm and Sanitary Sewer |
| UGE | Underground Electric |
| WTR | Water Utility |

**A** — Soil & Fill
Black and gray silt with some angular fine-to-medium gravel and/or little to some medium to coarse sand. Fill includes crushed brick, concrete, slag, glass, and foundry sand.

**B-1** — Natural Soils
Organic Silt; Crumbly; Roots; Organic Matter

**B-2** — Natural Soils
Fine to coarse gray sand with trace silt. White shell fragments present.

**B-3** — Natural Soils
Gray interbedded silt and clay. Trace sand lenses.

Notes:
The primary constituents of concern in soil and groundwater are posted on the cross-section. Refer to tables for a complete list of analytes and concentrations.

Depths and diameters of underground utilities are approximate.

BORING/WELL DETAIL

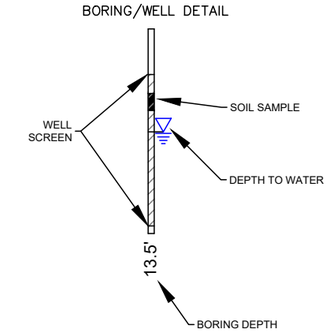


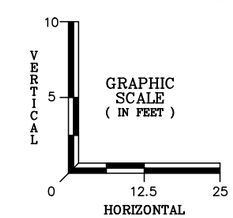


### SOIL CONCENTRATIONS, IN MILLIGRAMS PER KILOGRAM, A-A'

| B-4/TW-4 | MW-2 | PZ-1 | SB-67 | SB-39 | SB-66 | SB-65 | SB-17/MW-17 | SB-37 | SB-29 | SB-83/TW-83 | SB-86/TW-86 | MW-6 |
|---|---|---|---|---|---|---|---|---|---|---|---|---|
| 5-6'<br>TCE 0.048 | 3-4'<br>TCE 180 | NO SAMPLE | 2-4'<br>TCE 831<br>6-8'<br>TCE 2.9 | 2-4'<br>TCE 582<br>4-6'<br>TCE 288 | 2-4'<br>TCE 0.0665<br>10-12'<br>TCE 0.032J | 2-4'<br>TCE 74.2<br>6-8'<br>TCE 0.099<br>14-16'<br>TCE 0.070J<br>20-24'<br>TCE 0.067J<br>30-32'<br>TCE <0.025<br>46-48'<br>TCE <0.025 | 2-4'<br>TCE4.9<br>12-14'<br>TCE <0.025 | 2-4'<br>TCE 0.84<br>4-6'<br>TCE <0.025 | 2-4'<br>As 5.7J<br>TCr 28.1<br>TriCr 26.1<br>HexCr 1.96<br>Pb NA<br>12-14'<br>As 33.2<br>TCr 65.9<br>TriCr 62.9<br>HexCr 3.05<br>Pb NA | 2-4'<br>As 410<br>TCr 32B<br>TriCr 32<br>HexCr <0.37<br>Pb 152<br>6-8'<br>As 129<br>TCr 8.0B<br>TriCr 8.0<br>HexCr <0.41<br>Pb 135<br>10-12'<br>As 387<br>TCr 610B<br>TriCr 610<br>HexCr <0.39<br>Pb 54.6 | 2-4'<br>As 26.9<br>TCr 13,000B<br>TriCr 13,000<br>HexCr <0.49<br>Pb 55.7<br>4-6'<br>As 27,500<br>TCr 46,000B<br>TriCr 46,000<br>HexCr 1.6J<br>Pb 4,210 | 3-4'<br>As 1,800<br>TCr 91<br>TriCr NA<br>HexCr NA<br>Pb 1,000<br>6-7'<br>As 340<br>TCr 11,000<br>TriCr NA<br>HexCr NA<br>Pb 210 |

### GROUNDWATER CONCENTRATIONS, IN MICROGRAMS PER LITER, A-A'

| B-4/TW-4 | MW-2 | PZ-1 | SB-67 | SB-39 | SB-66 | SB-65 | SB-17/MW-17 | SB-37 | SB-29 | SB-83/TW-83 | SB-86/TW-86 | MW-6 |
|---|---|---|---|---|---|---|---|---|---|---|---|---|
| TCE 17.0 | TCE 271 | TCE 5.4 | NO SAMPLE | NO SAMPLE | NO SAMPLE | NO SAMPLE | TCE 3.7 | NO SAMPLE | NO SAMPLE | As 202,000<br>Pb 9.0J<br>TCr 950<br>TriCr 950<br>HexCr 4.15 | As 507,000<br>Pb 210<br>TCr 15,000<br>TriCr 15,000<br>HexCr <0.51 | As 625<br>Pb <3.0<br>TCr 465<br>TriCr 460J<br>HexCr <97 |

| REVISION NO. | DESCRIPTION | DATE | BY |
|---|---|---|---|
| | | | |

| | |
|---|---|
| DESIGNED BY TLS | DATE 6/29/17 |
| DRAWN BY RJN | DATE 6/29/17 |
| APPROVED BY KWW | DATE 6/29/17 |

CADFILE G:\ACAD\2505019 – 300 S Barclay st\2017-6-29\BASE FILE BIG.dwg
XREF
LMAN

# FIGURE 6
## CROSS SECTION OF GROUNDWATER AND SOIL CONCENTRATIONS, A to A'
## WAYNE PIGMENT CORPORATION
### 300 SOUTH BARCLAY STREET
### MILWAUKEE, WISCONSIN

KEY ENGINEERING GROUP LTD.
735 NORTH WATER STREET, SUITE 510
MILWAUKEE, WI 53202
414.224.8300 (tel) - 414.224.8383 (fax)

KEY PROJECT NUMBER 2505019
SCALE
SHEET NUMBER

Jul 11, 2017 – 9:37am G:\ACAD\2505019 – 300 S Barclay st\2017-6-29\BASE FILE BIG.dwg

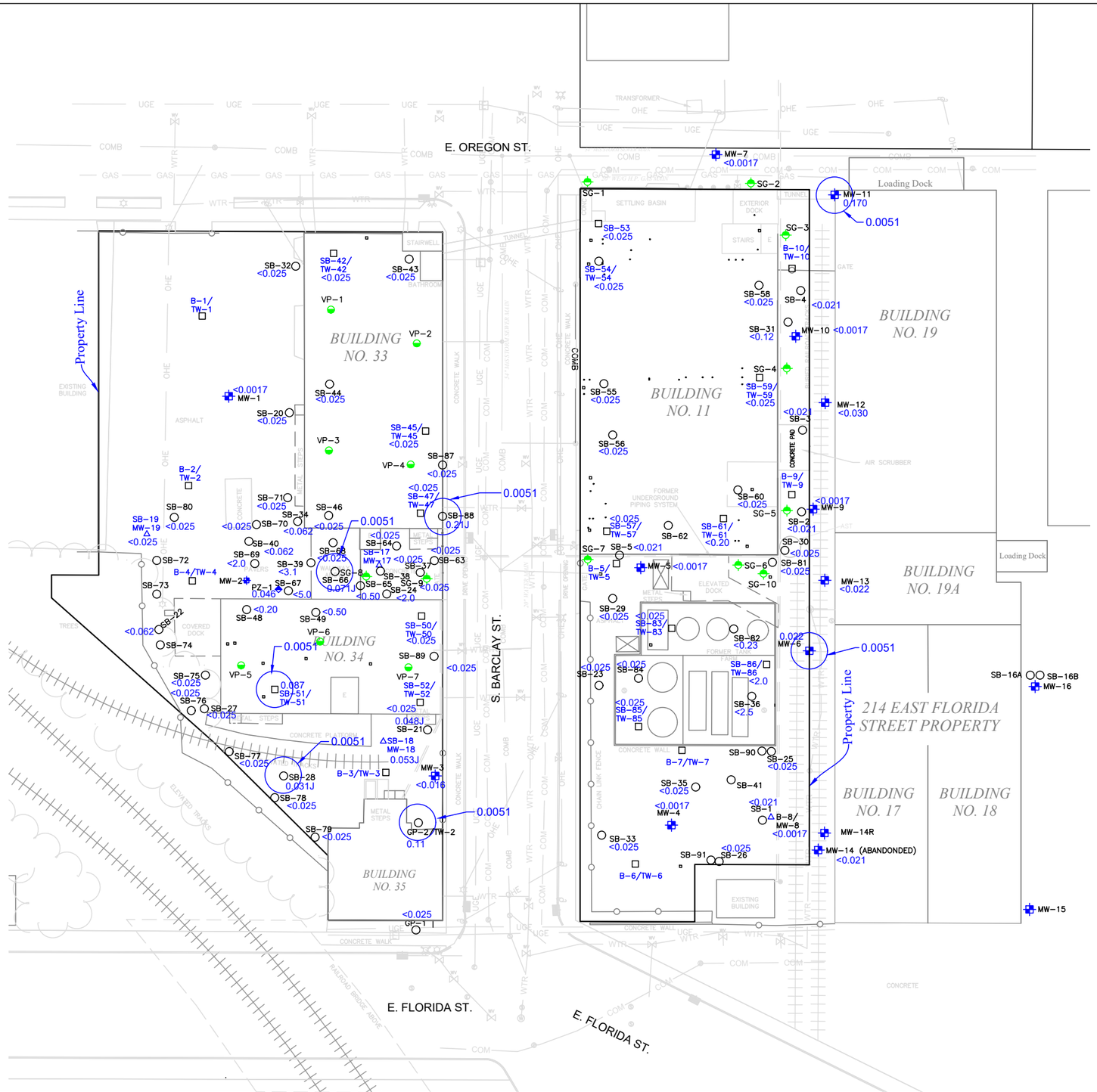


# LEGEND

- SOIL PROBE LOCATION
- TEMPORARY WELL / SOIL BORING
- MONITORING WELL / SOIL BORING
- PIEZOMETER LOCATION
- NEAR SLAB SOIL GAS LOCATION
- SUB-SLAB VAPOR POINTS
- MONITORING WELL LOCATION
- 0.170 — SOIL BENZENE CONCENTRATION IN MILLIGRAMS PER KILOGRAM (mg/kg)
- 0.0051 — ISOCONCENTRATION CONTOUR
- 0.0051 — PROTECTION OF GROUNDWATER RCL (mg/kg)

SCALE IN FEET

50' 0 50'

| REVISION NO. | DESCRIPTION | DATE | BY |
|---|---|---|---|
| | | | |

| | |
|---|---|
| DESIGNED BY TLS | DATE 11/9/16 |
| DRAWN BY RJN | DATE 11/9/16 |
| APPROVED BY KWW | DATE 11/9/16 |

CADFILE G:\ACAD\2505019 – 300 S Barclay st\2017-6-29\BASE FILE BIG.dwg
XREF
LMAN

# FIGURE 7
## SOIL BENZENE ISOCONCENTRATION MAP LESS THAN 4 FEET
## WAYNE PIGMENT CORPORATION
### 300 SOUTH BARCLAY STREET
### MILWAUKEE, WISCONSIN

KEY ENGINEERING GROUP LTD.
735 NORTH WATER STREET, SUITE 510
MILWAUKEE, WI 53202
414.224.8300 (tel) • 414.224.8383 (fax)

KEY PROJECT NUMBER 2505019
SCALE 1" = 50'
SHEET NUMBER

Jul 11, 2017 – 9:37am G:\ACAD\2505019 – 300 S Barclay st\2017-6-29\BASE FILE BIG.dwg

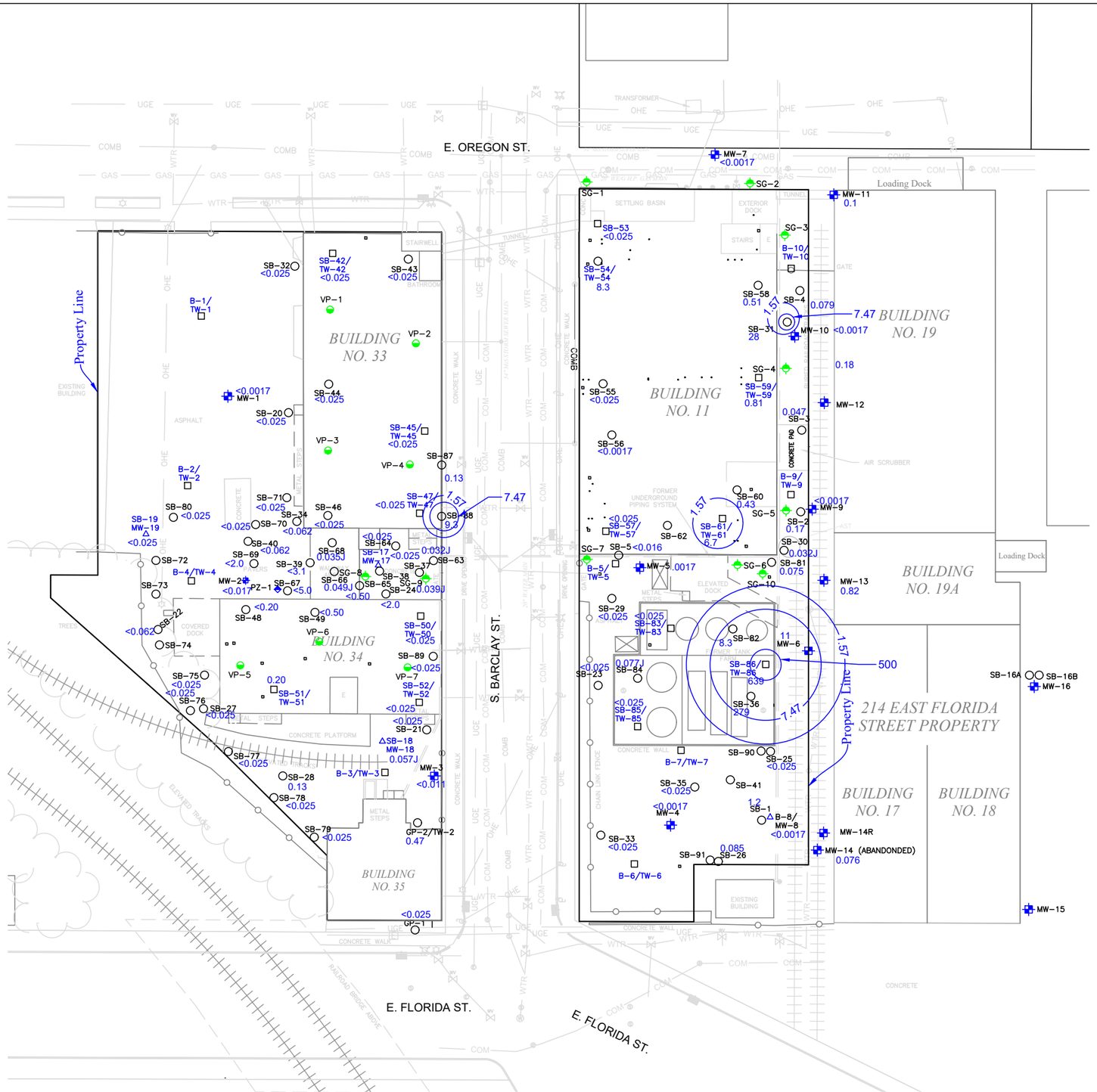


## LEGEND

- SOIL PROBE LOCATION
- TEMPORARY WELL / SOIL BORING
- MONITORING WELL / SOIL BORING
- PIEZOMETER LOCATION
- NEAR SLAB SOIL GAS LOCATION
- SUB-SLAB VAPOR POINTS
- MONITORING WELL LOCATION
- 8.3 — SOIL ETHYLBENZE CONCENTRATION IN MILLIGRAMS PER KILOGRAM (mg/kg)
- 7.47 — ISOCONCENTRATION CONTOUR
- 1.57 — PROTECTION OF GROUNDWATER RCL (mg/kg)
- 7.47 — NON-INDUSTRIAL DIRECT CONTACT RCL (mg/kg)

SCALE IN FEET

50' 0 50'

| REVISION NO. | DESCRIPTION | DATE | BY |
|---|---|---|---|
| | | | |

| | |
|---|---|
| DESIGNED BY TLS | DATE 6/29/17 |
| DRAWN BY RJN | DATE 6/29/17 |
| APPROVED BY KWW | DATE 6/29/17 |
| CADFILE G:\ACAD\2505019 – 300 S Barclay st\2017-6-29\BASE FILE BIG.dwg<br>XREF<br>LMAN | |

# FIGURE 8
# SOIL ETHYLBENZENE ISOCONCENTRATION MAP LESS THAN 4 FEET
## WAYNE PIGMENT CORPORATION
### 300 SOUTH BARCLAY STREET
### MILWAUKEE, WISCONSIN

KEY ENGINEERING GROUP LTD.
735 NORTH WATER STREET, SUITE 510
MILWAUKEE, WI 53202
414.224.8300 (tel) • 414.224.8383 (fax)

KEY PROJECT NUMBER 2505019

SCALE 1" = 50'

SHEET NUMBER

Jul 11, 2017 – 9:37am G:\ACAD\2505019 – 300 S Barclay st\2017-6-29\BASE FILE BIG.dwg

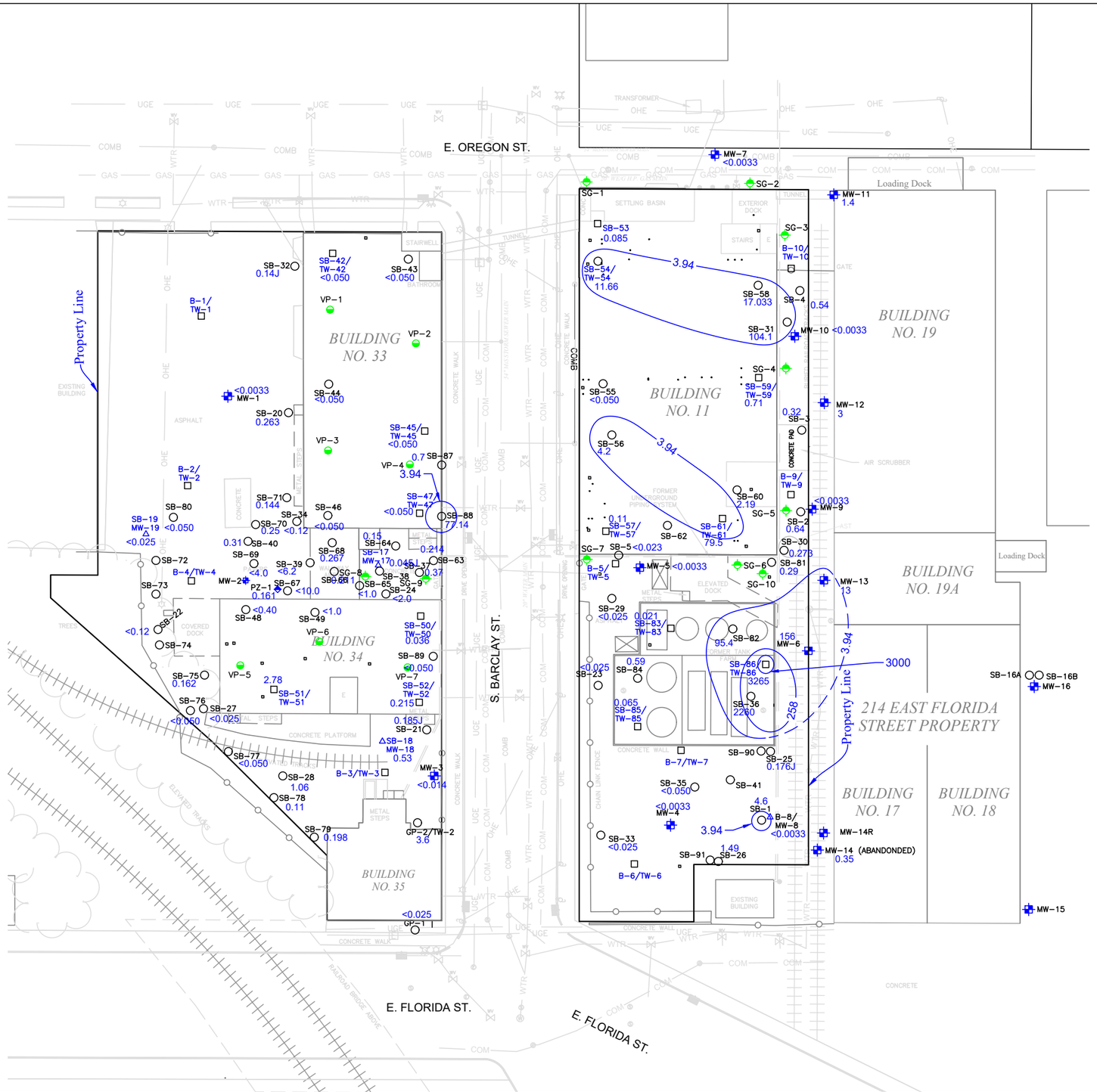


## LEGEND

- SOIL PROBE LOCATION
- TEMPORARY WELL / SOIL BORING
- MONITORING WELL / SOIL BORING
- PIEZOMETER LOCATION
- NEAR SLAB SOIL GAS LOCATION
- SUB-SLAB VAPOR POINT
- MONITORING WELL LOCATION
- 4.2 SOIL XYLENES CONCENTRATION IN MILLIGRAMS PER KILOGRAM (mg/kg)
- 3.94 ISOCONCENTRATION CONTOUR
- 3.94 PROTECTION OF GROUNDWATER RCL (mg/kg)
- 258 NON-INDUSTRIAL DIRECT CONTACT RCL (mg/kg)

SCALE IN FEET

50' 0 50'

| REVISION NO. | DESCRIPTION | DATE | BY |
|---|---|---|---|
| | | | |

| | |
|---|---|
| DESIGNED BY TLS | DATE 6/29/17 |
| DRAWN BY RJN | DATE 6/29/17 |
| APPROVED BY KWW | DATE 6/29/17 |
| CADFILE G:\ACAD\2505019 – 300 S Barclay st\2017-6-29\BASE FILE BIG.dwg<br>XREF<br>LMAN | |

# FIGURE 9
# SOIL XYLENES ISOCONCENTRATION MAP LESS THAN 4 FEET
# WAYNE PIGMENT CORPORATION
## 300 SOUTH BARCLAY STREET
## MILWAUKEE, WISCONSIN

KEY ENGINEERING GROUP LTD.
735 NORTH WATER STREET, SUITE 510
MILWAUKEE, WI 53202
414.224.8300 (tel) • 414.224.8383 (fax)

KEY PROJECT NUMBER 2505019

SCALE 1" = 50'

SHEET NUMBER

Jul 11, 2017 – 9:37am G:\ACAD\2505019 – 300 S Barclay st\2017-6-29\BASE FILE BIG.dwg

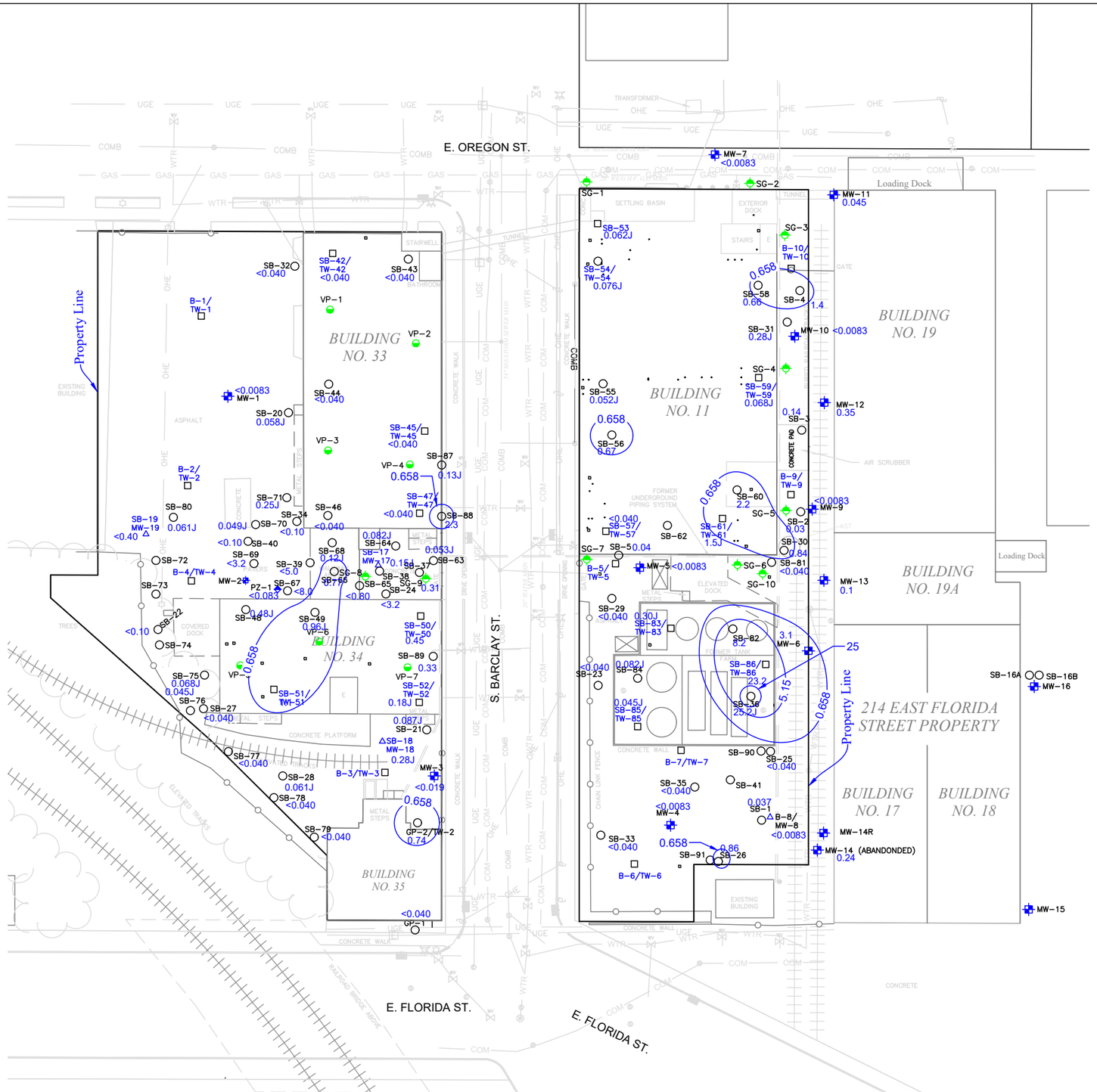


## LEGEND

- SOIL PROBE LOCATION
- TEMPORARY WELL / SOIL BORING
- MONITORING WELL / SOIL BORING
- PIEZOMETER LOCATION
- NEAR SLAB SOIL GAS LOCATION
- SUB-SLAB VAPOR POINTS
- MONITORING WELL LOCATION
- 8.2 SOIL NAPHTHALENE CONCENTRATION IN MILLIGRAMS PER KILOGRAM (mg/kg)
- 5.15 ISOCONCENTRATION CONTOUR
- 0.6582 PROTECTION OF GROUNDWATER RCL (mg/kg)
- 5.15 NON-INDUSTRIAL DIRECT CONTACT RCL (mg/kg)

SCALE IN FEET

50' 0 50'

| REVISION NO. | DESCRIPTION | DATE | BY |
|---|---|---|---|
| | | | |

| | |
|---|---|
| DESIGNED BY TLS | DATE 6/29/17 |
| DRAWN BY RJN | DATE 6/29/17 |
| APPROVED BY KWW | DATE 6/29/17 |
| CADFILE G:\ACAD\2505019 – 300 S Barclay st\2017-6-29\BASE FILE BIG.dwg<br>XREF<br>LMAN | |

# FIGURE 10
# SOIL NAPHTHALENE ISOCONCENTRATION MAP LESS THAN 4 FEET
## WAYNE PIGMENT CORPORATION
### 300 SOUTH BARCLAY STREET
### MILWAUKEE, WISCONSIN

KEY ENGINEERING GROUP LTD.
735 NORTH WATER STREET, SUITE 510
MILWAUKEE, WI 53202
414.224.8300 (tel) • 414.224.8383 (fax)

KEY PROJECT NUMBER 2505019

SCALE 1" = 50'

SHEET NUMBER

Jul 11, 2017 – 9:37am G:\ACAD\2505019 – 300 S Barclay st\2017-6-29\BASE FILE BIG.dwg

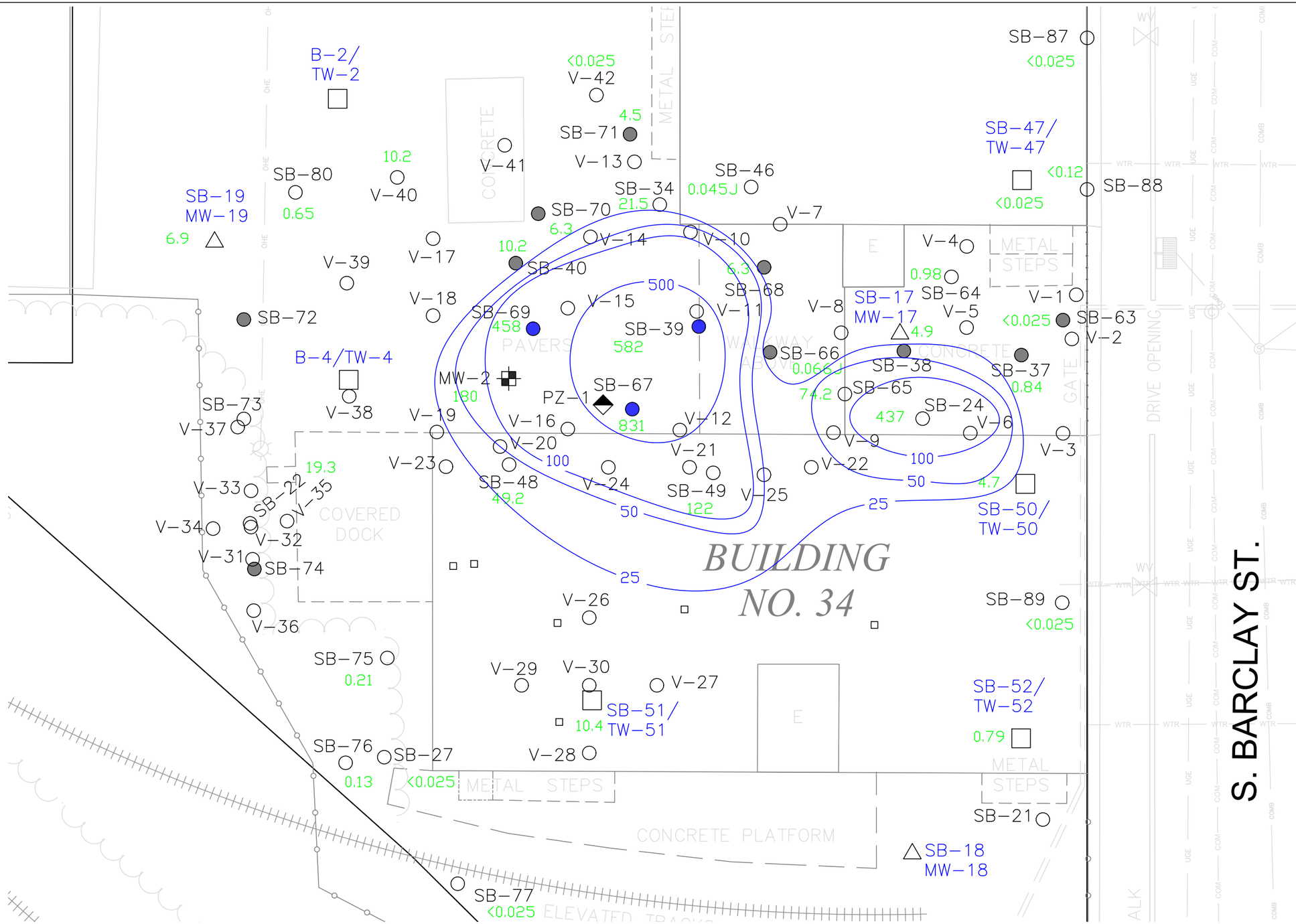


## LEGEND

- SOIL PROBE LOCATION
- TEMPORARY WELL / SOIL BORING
- MONITORING WELL / SOIL BORING
- PIEZOMETER LOCATION
- MONITORING WELL LOCATION
- 4.5 SOIL TRICHLOROETHENE CONCENTRATION IN MILLIGRAMS PER KILOGRAM
- -25- ISOCONCENTRATION CONTOUR
- SOIL BORING WHERE TOXICITY CHARACTERISTIC LEACHING PROCEDURE FOR TRICHLOROETHENE WAS ABOVE 0.5 MILLIGRAMS PER LITER (CHARACTERISTICALLY HAZARDOUS).
- SOIL BORING WHERE TOXICITY CHARACTERISTIC LEACHING PROCEDURE FOR TRICHLOROETHENE WAS BELOW 0.5 MILLIGRAMS PER LITER (NOT CHARACTERISTICALLY HAZARDOUS).

| REVISION NO. | DESCRIPTION | DATE | BY |
|---|---|---|---|
| | | | |

| | |
|---|---|
| DESIGNED BY TLS | DATE 6/29/17 |
| DRAWN BY RJN | DATE 6/29/17 |
| APPROVED BY KWW | DATE 6/19/17 |

CADFILE G:\ACAD\2505019 – 300 S Barclay st\2017-6-29\BASE FILE SMALL.dwg
XREF
LMAN

**FIGURE 11**
**SOIL TRICHLOROETHENE ISOCONCENTRATION MAP LESS THAN 4 FEET**
**WAYNE PIGMENT CORPORATION**
**300 SOUTH BARCLAY STREET**
**MILWAUKEE, WISCONSIN**

KEY ENGINEERING GROUP LTD.
735 NORTH WATER STREET, SUITE 510
MILWAUKEE, WI 53202
414.224.8300 (tel) • 414.224.8383 (fax)

KEY PROJECT NUMBER 2505019
SCALE 1" = 15'
SHEET NUMBER

Jun 29, 2017 – 3:57pm G:\ACAD\2505019 – 300 S Barclay st\2017-6-29\BASE FILE SMALL.dwg

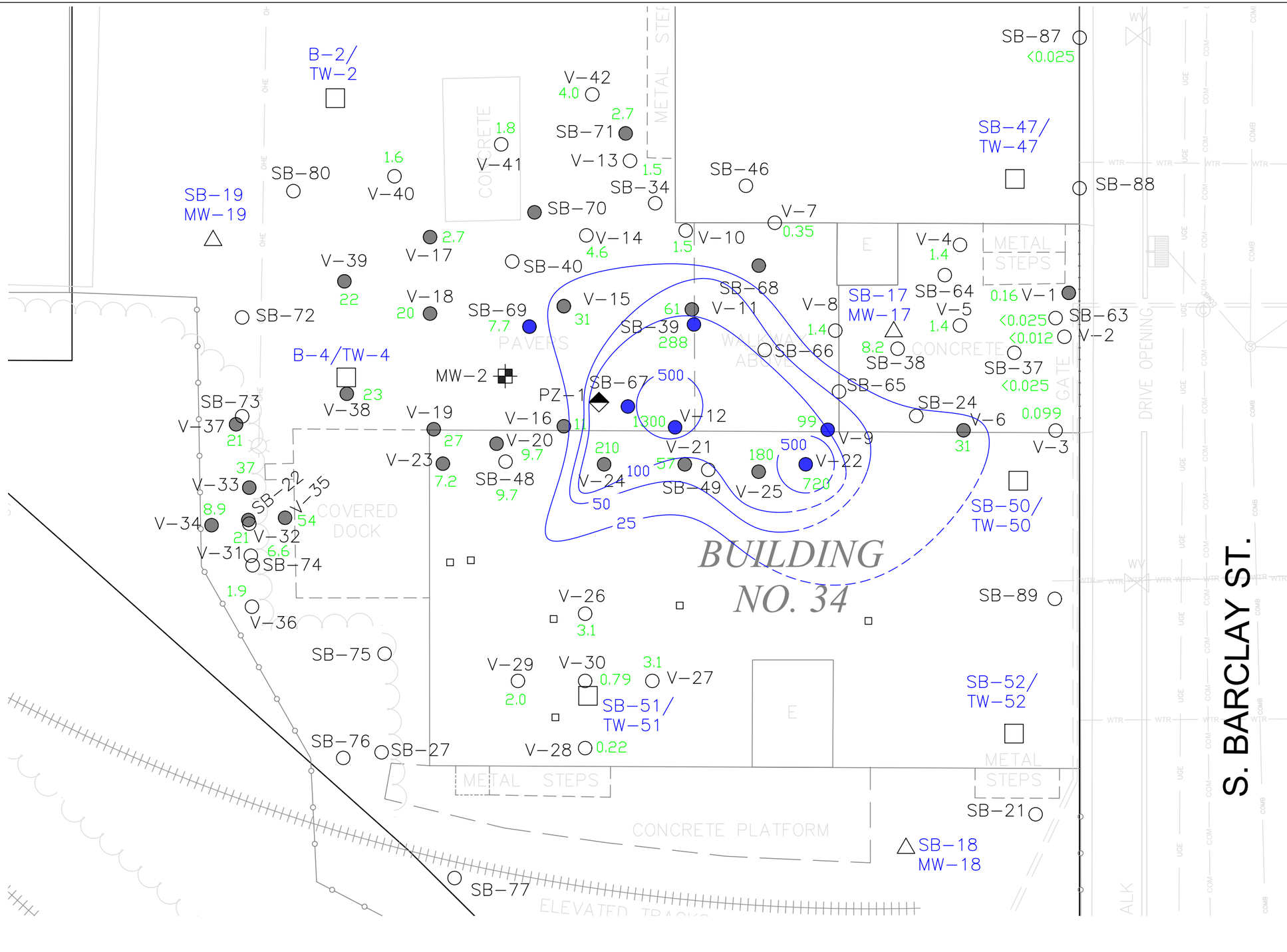


## LEGEND

- SOIL PROBE LOCATION
- TEMPORARY WELL / SOIL BORING
- MONITORING WELL / SOIL BORING
- PIEZOMETER LOCATION
- MONITORING WELL LOCATION
- 8.2 SOIL TRICHLOROETHENE CONCENTRATION IN MILLIGRAMS PER KILOGRAM
- -25- ISOCONCENTRATION CONTOUR
- SOIL BORING WHERE TOXICITY CHARACTERISTIC LEACHING PROCEDURE FOR TRICHLOROETHENE WAS ABOVE 0.5 MILLIGRAMS PER LITER (CHARACTERISTICALLY HAZARDOUS).
- SOIL BORING WHERE TOXICITY CHARACTERISTIC LEACHING PROCEDURE FOR TRICHLOROETHENE WAS BELOW 0.5 MILLIGRAMS PER LITER (NOT CHARACTERISTICALLY HAZARDOUS).

| REVISION NO. | DESCRIPTION | DATE | BY |
|---|---|---|---|
| | | | |

| | |
|---|---|
| DESIGNED BY TLS | DATE 6/29/17 |
| DRAWN BY RJN | DATE 6/29/17 |
| APPROVED BY KWW | DATE 6/29/2017 |

CADFILE G:\ACAD\2505019 – 300 S Barclay st\2017-6-29\BASE FILE SMALL.dwg
XREF
LMAN

# FIGURE 12
## SOIL TRICHLOROETHENE ISOCONCENTRATION MAP (4-6')
## WAYNE PIGMENT CORPORATION
### 300 SOUTH BARCLAY STREET
### MILWAUKEE, WISCONSIN

KEY ENGINEERING GROUP LTD.
735 NORTH WATER STREET, SUITE 510
MILWAUKEE, WI 53202
414.224.8300 (tel) - 414.224.8383 (fax)

KEY PROJECT NUMBER 2505019
SCALE 1" = 15'
SHEET NUMBER

Jun 29, 2017 – 3:57pm G:\ACAD\2505019 – 300 S Barclay st\2017-6-29\BASE FILE SMALL.dwg

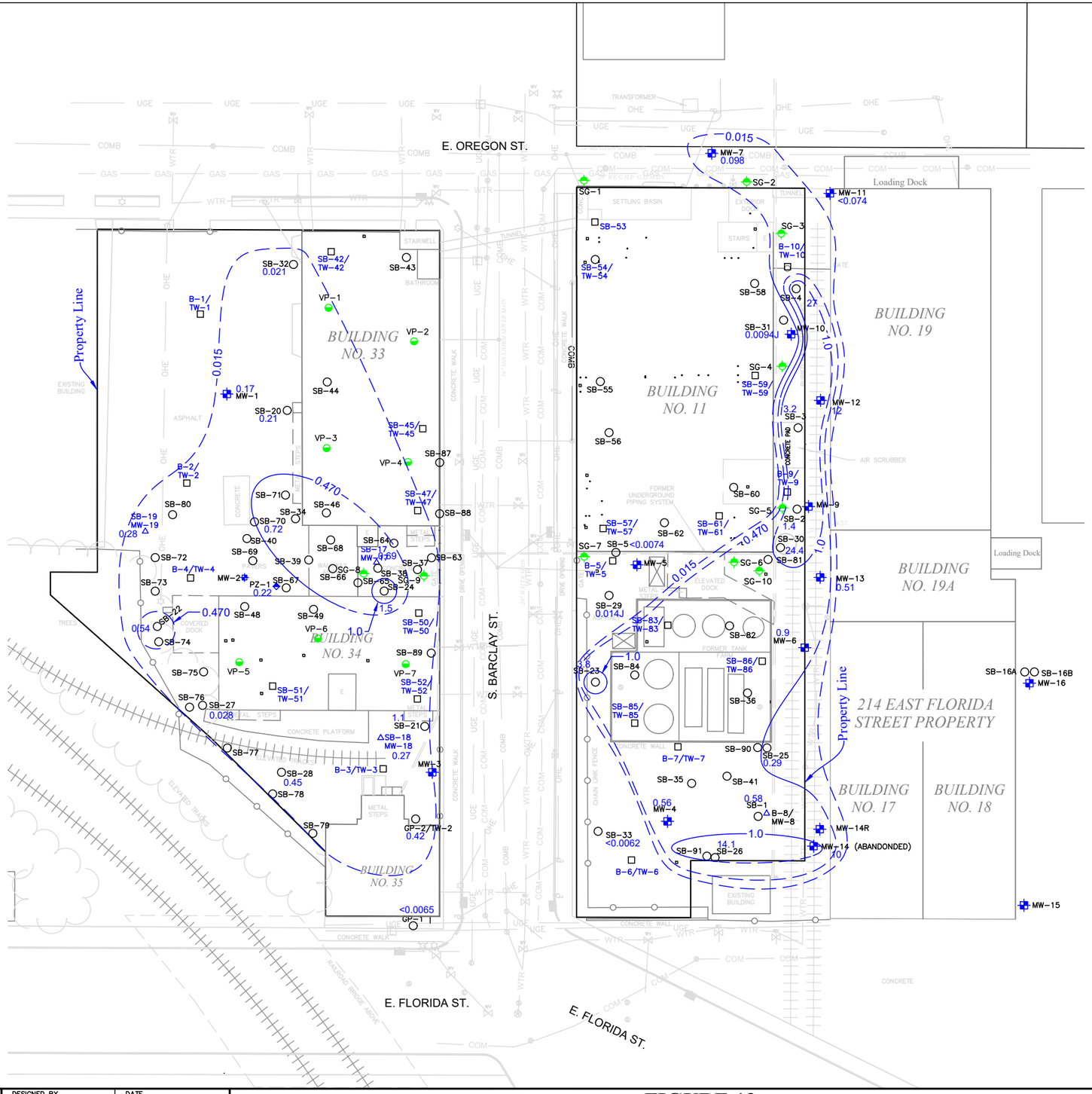


# LEGEND

- SOIL PROBE LOCATION
- TEMPORARY WELL / SOIL BORING
- MONITORING WELL / SOIL BORING
- PIEZOMETER LOCATION
- NEAR SLAB SOIL GAS LOCATION
- SUB-SLAB VAPOR POITNS
- MONITORING WELL LOCATION
- 0.9 SOIL BENZO(A)PYRENE CONCENTRATION IN MILLIGRAMS PER KILOGRAM (mg/kg)
- 1.0 ISOCONCENTRATION CONTOUR
- 0.470 PROTECTION OF GROUNDWATER RCL (mg/kg)
- 0.015 NON-INDUSTRIAL DIRECT CONTACT RCL (mg/kg)

SCALE IN FEET

50' 0 50'

| REVISION NO. | DESCRIPTION | DATE | BY |
|---|---|---|---|
| | | | |

| | |
|---|---|
| DESIGNED BY TLS | DATE 6/29/17 |
| DRAWN BY RJN | DATE 6/29/17 |
| APPROVED BY KWW | DATE 6/29/17 |

CADFILE G:\ACAD\2505019 - 300 S Barclay st\2017-6-29\BASE FILE BIG.dwg
XREF
LMAN

# FIGURE 13
## SOIL ISOCONCENTRATION MAP BENZO(A)PYRENE LESS THAN 4 FEET
## WAYNE PIGMENT CORPORATION
### 300 SOUTH BARCLAY STREET
### MILWAUKEE, WISCONSIN

KEY ENGINEERING GROUP LTD.
735 NORTH WATER STREET, SUITE 510
MILWAUKEE, WI 53202
414.224.8300 (tel) • 414.224.8383 (fax)

KEY PROJECT NUMBER 2505019
SCALE 1" = 50'
SHEET NUMBER

Jul 11, 2017 - 9:37am G:\ACAD\2505019 - 300 S Barclay st\2017-6-29\BASE FILE BIG.dwg

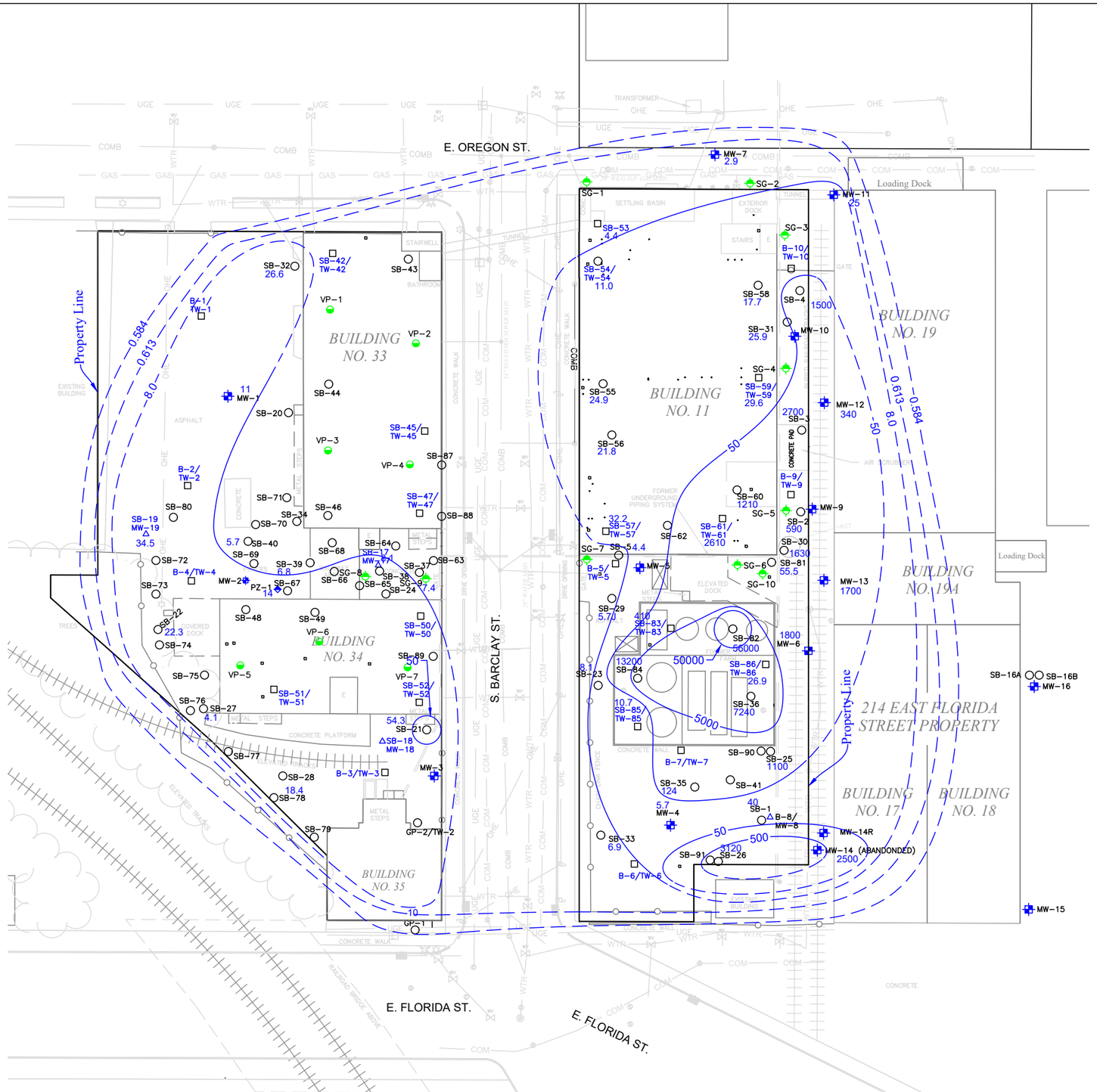


## LEGEND

- SOIL PROBE LOCATION
- TEMPORARY WELL / SOIL BORING
- MONITORING WELL / SOIL BORING
- PIEZOMETER LOCATION
- NEAR SLAB SOIL GAS LOCATION
- SUB-SLAB VAPOR POINTS
- MONITORING WELL LOCATION
- 55.5 — SOIL ARSENIC CONCENTRATION IN MILLIGRAMS PER KILOGRAM (mg/kg)
- —50— ISOCONCENTRATION CONTOUR
- 8.0 — ARSENIC BACKGROUND THRESHOLD VALUE (mg/kg)
- 0.584 — PROTECTION OF GROUNDWATER RCL (mg/kg)
- 0.613 — NON-INDUSTRIAL DIRECT CONTACT RCL (mg/kg)

SCALE IN FEET

50' 0 50'

| REVISION NO. | DESCRIPTION | DATE | BY |
|---|---|---|---|
| | | | |

| | |
|---|---|
| DESIGNED BY TLS | DATE 6/29/17 |
| DRAWN BY RJN | DATE 6/29/17 |
| APPROVED BY KWW | DATE 6/29/17 |

CADFILE G:\ACAD\2505019 – 300 S Barclay st\2017-6-29\BASE FILE BIG.dwg
XREF
LMAN

# FIGURE 14
# SOIL ARSENIC ISOCONCENTRATION MAP LESS THAN 4 FEET
## WAYNE PIGMENT CORPORATION
### 300 SOUTH BARCLAY STREET
### MILWAUKEE, WISCONSIN

KEY ENGINEERING GROUP LTD.
735 NORTH WATER STREET, SUITE 510
MILWAUKEE, WI 53202
414.224.8300 (tel) • 414.224.8383 (fax)

KEY PROJECT NUMBER 2505019
SCALE 1" = 50'
SHEET NUMBER

Jul 11, 2017 – 9:37am G:\ACAD\2505019 – 300 S Barclay st\2017-6-29\BASE FILE BIG.dwg

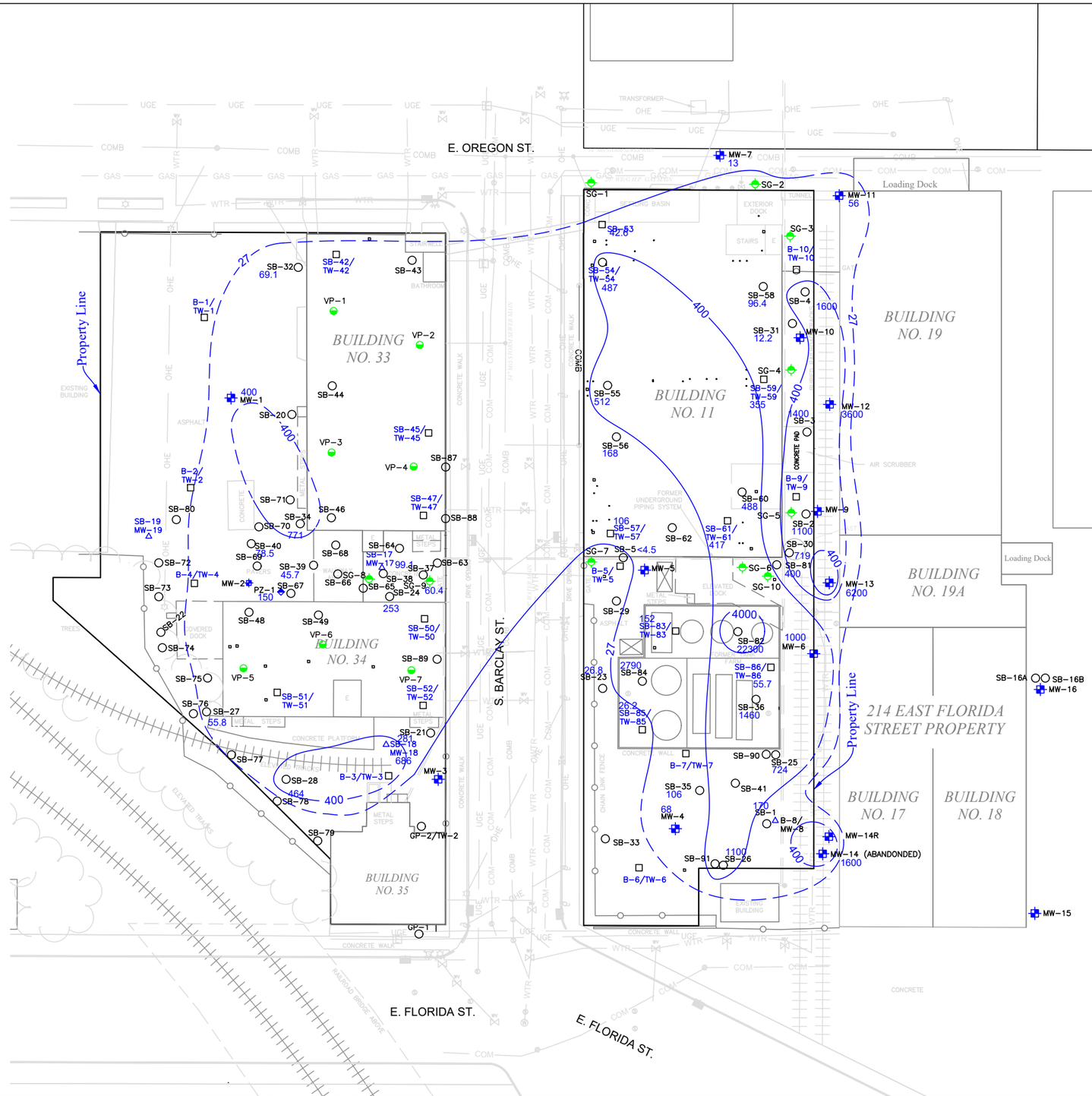


## LEGEND

- SOIL PROBE LOCATION
- TEMPORARY WELL / SOIL BORING
- MONITORING WELL / SOIL BORING
- PIEZOMETER LOCATION
- NEAR SLAB SOIL GAS LOCATION
- SUB-SLAB VAPOR POINTS
- MONITORING WELL LOCATION
- 152 SOIL LEAD CONCENTRATION IN MILLIGRAMS PER KILOGRAM (mg/kg)
- 400 ISOCONCENTRATION CONTOUR
- 52 LEAD BACKGROUND THRESHOLD VALUE
- 27 PROTECTION OF GROUNDWATER RCL (mg/kg)
- 400 NON-INDUSTRIAL DIRECT CONTACT RCL (mg/kg)

SCALE IN FEET

50' 0 50'

| REVISION NO. | DESCRIPTION | DATE | BY |
|---|---|---|---|
| | | | |

| | |
|---|---|
| DESIGNED BY TLS | DATE 6/29/17 |
| DRAWN BY RJN | DATE 6/29/17 |
| APPROVED BY KWW | DATE 6/29/17 |
| CADFILE G:\ACAD\2505019 – 300 S Barclay st\2017-6-29\BASE FILE BIG.dwg<br>XREF<br>LMAN | |

# FIGURE 15
# SOIL LEAD ISOCONCENTRATION MAP LESS THAN 4 FEET
# WAYNE PIGMENT CORPORATION
## 300 SOUTH BARCLAY STREET
## MILWAUKEE, WISCONSIN

KEY ENGINEERING GROUP LTD.
735 NORTH WATER STREET, SUITE 510
MILWAUKEE, WI 53202
414.224.8300 (tel) • 414.224.8383 (fax)

KEY PROJECT NUMBER 2505019

SCALE 1" = 50'

SHEET NUMBER

Jul 11, 2017 – 9:37am G:\ACAD\2505019 – 300 S Barclay st\2017-6-29\BASE FILE BIG.dwg

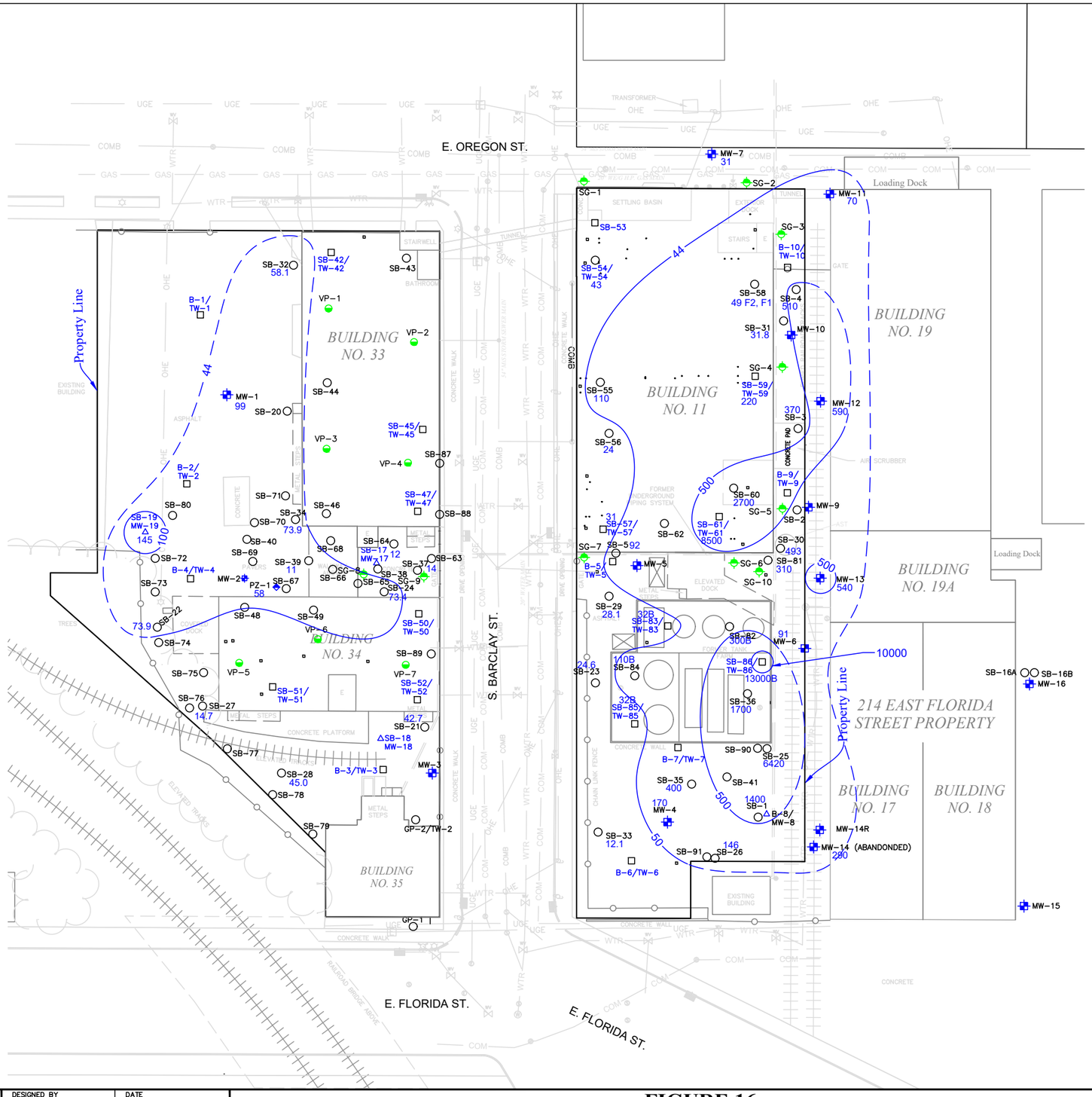


## LEGEND

- SOIL PROBE LOCATION
- TEMPORARY WELL / SOIL BORING
- MONITORING WELL / SOIL BORING
- PIEZOMETER LOCATION
- NEAR SLAB SOIL GAS LOCATION
- SUB-SLAB VAPOR POINT
- MONITORING WELL LOCATION
- 28.1 — SOIL TOTAL CHROMIUM CONCENTRATION IN MILLIGRAMS PER KILOGRAM (mg/kg)
- 44 — ISOCONCENTRATION CONTOUR
- 44 — CHROMIUM BACKGROUND THRESHOLD VALUE
- 360000 — NON-INDUSTRIAL DIRECT CONTACT RCL (mg/kg)

SCALE IN FEET

50' 0 50'

| REVISION NO. | DESCRIPTION | DATE | BY |
|---|---|---|---|
| | | | |

| | |
|---|---|
| DESIGNED BY TLS | DATE 11/9/16 |
| DRAWN BY RJN | DATE 11/9/16 |
| APPROVED BY KWW | DATE 11/9/16 |

CADFILE G:\ACAD\2505019 – 300 S Barclay st\2017-6-29\BASE FILE BIG.dwg
XREF
LMAN

# FIGURE 16
# SOIL TOTAL CHROMIUM ISOCONCENTRATION MAP LESS THAN 4 FEET
## WAYNE PIGMENT CORPORATION
### 300 SOUTH BARCLAY STREET
### MILWAUKEE, WISCONSIN

KEY ENGINEERING GROUP LTD.
735 NORTH WATER STREET, SUITE 510
MILWAUKEE, WI 53202
414.224.8300 (tel) • 414.224.8383 (fax)

KEY PROJECT NUMBER 2505019

SCALE 1" = 50'

SHEET NUMBER

Jul 11, 2017 – 10:44am G:\ACAD\2505019 – 300 S Barclay st\2017-6-29\BASE FILE BIG.dwg

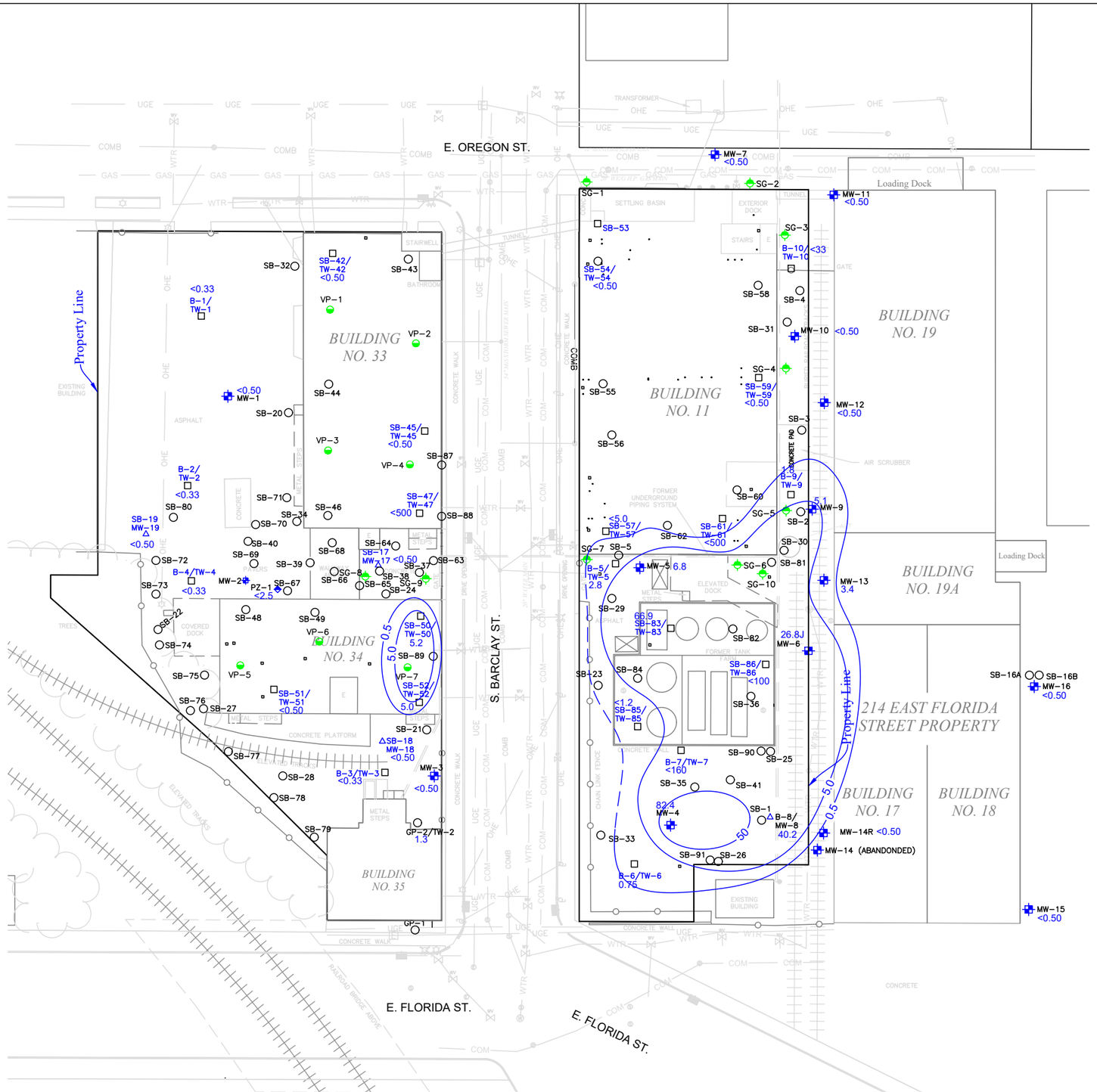


# LEGEND

- SOIL PROBE LOCATION
- TEMPORARY WELL / SOIL BORING
- MONITORING WELL / SOIL BORING
- PIEZOMETER LOCATION
- NEAR SLAB SOIL GAS LOCATION
- SUB- SLAB VAPOR POINTS
- MONITORING WELL LOCATION
- 26.4 GROUNDWATER BENZENE CONCENTRATION IN MICROGRAMS PER LITER (µg/L)
- —5— ISOCONCENTRATION CONTOUR
- 0.5 PREVENTIVE ACTION LIMIT
- 5.0 ENFORCEMENT STANDARD

NOTE:
MONITORING WELL DATA IS FROM DECEMBER 2015.
TEMPORARYW ELL DATA IS FROM 2006 to 2016.
THE MONITORING & TEMPORARY WELL DATA ARE CONTOURED TOGETHER TO GET A GENERAL SITE-WIDE DISTRIBUTION OF CONTAMINATION.

SCALE IN FEET

50' 0 50'

| REVISION NO. | DESCRIPTION | DATE | BY |
|---|---|---|---|
| | | | |

| | |
|---|---|
| DESIGNED BY TLS | DATE 6/29/17 |
| DRAWN BY RJN | DATE 6/29/17 |
| APPROVED BY KWW | DATE 6/29/17 |
| CADFILE G:\ACAD\2505019 – 300 S Barclay st\2017-6-29\BASE FILE BIG.dwg<br>XREF<br>LMAN | |

# FIGURE 17
# GROUNDWATER BENZENE ISOCONCENTRATION MAP
# WAYNE PIGMENT CORPORATION
## 300 SOUTH BARCLAY STREET
## MILWAUKEE, WISCONSIN

KEY ENGINEERING GROUP LTD.
735 NORTH WATER STREET, SUITE 510
MILWAUKEE, WI 53202
414.224.8300 (tel) • 414.224.8383 (fax)

KEY PROJECT NUMBER 2505019

SCALE 1" = 50'

SHEET NUMBER

Jul 11, 2017 – 9:38am G:\ACAD\2505019 – 300 S Barclay st\2017-6-29\BASE FILE BIG.dwg

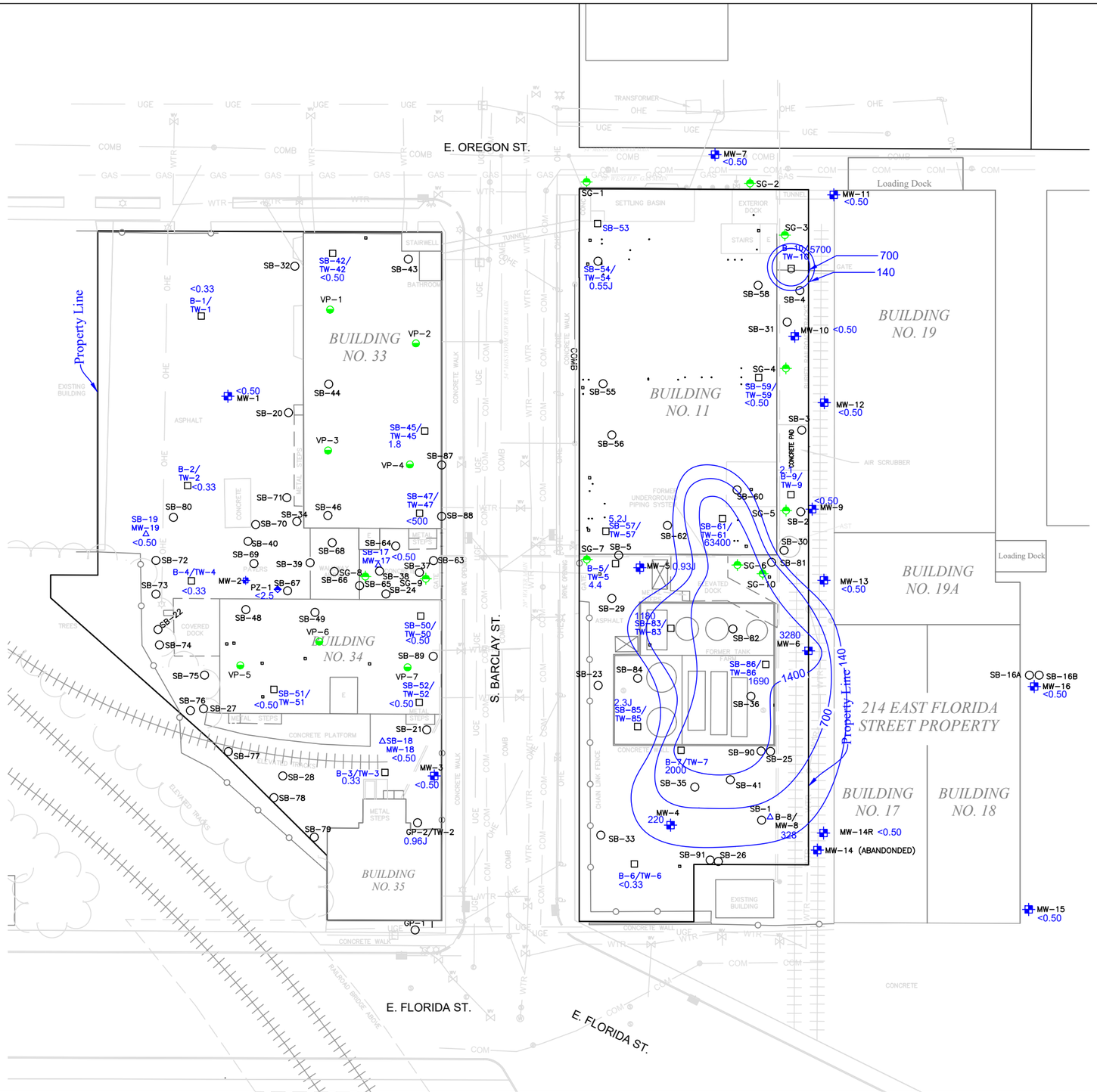


# LEGEND

- SOIL PROBE LOCATION
- TEMPORARY WELL / SOIL BORING
- MONITORING WELL / SOIL BORING
- PIEZOMETER LOCATION
- NEAR SLAB SOIL GAS LOCATION
- SUB- SLAB VAPOR POINTS
- MONITORING WELL LOCATION

520 GROUNDWATER ETHYLBENZENE CONCENTRATION IN MICROGRAMS PER LITER (µg/L)

-1000- ISOCONCENTRATION CONTOUR

140 PREVENTIVE ACTION LIMIT

700 ENFORCEMENT STANDARD

NOTE:
MONITORING WELL DATA IS FROM DECEMBER 2015.
TEMPORARYW ELL DATA IS FROM 2006 to 2016.
THE MONITORING & TEMPORARY WELL DATA ARE CONTOURED TOGETHER TO GET A GENERAL SITE-WIDE DISTRIBUTION OF CONTAMINATION.

SCALE IN FEET

50' 0 50'

| REVISION NO. | DESCRIPTION | DATE | BY |
|---|---|---|---|
| | | | |

| | |
|---|---|
| DESIGNED BY TLS | DATE 6/29/17 |
| DRAWN BY RJN | DATE 6/29/17 |
| APPROVED BY KWW | DATE 6/29/17 |

CADFILE G:\ACAD\2505019 – 300 S Barclay st\2017-6-29\BASE FILE BIG.dwg
XREF
LMAN

# FIGURE 18
# GROUNDWATER ETHYLBENZENE ISOCONCENTRATION MAP
# WAYNE PIGMENT CORPORATION
## 300 SOUTH BARCLAY STREET
## MILWAUKEE, WISCONSIN

KEY ENGINEERING GROUP LTD.
735 NORTH WATER STREET, SUITE 510
MILWAUKEE, WI 53202
414.224.8300 (tel) • 414.224.8383 (fax)

KEY PROJECT NUMBER 2505019
SCALE 1" = 50'
SHEET NUMBER

Jul 11, 2017 – 9:38am G:\ACAD\2505019 – 300 S Barclay st\2017-6-29\BASE FILE BIG.dwg

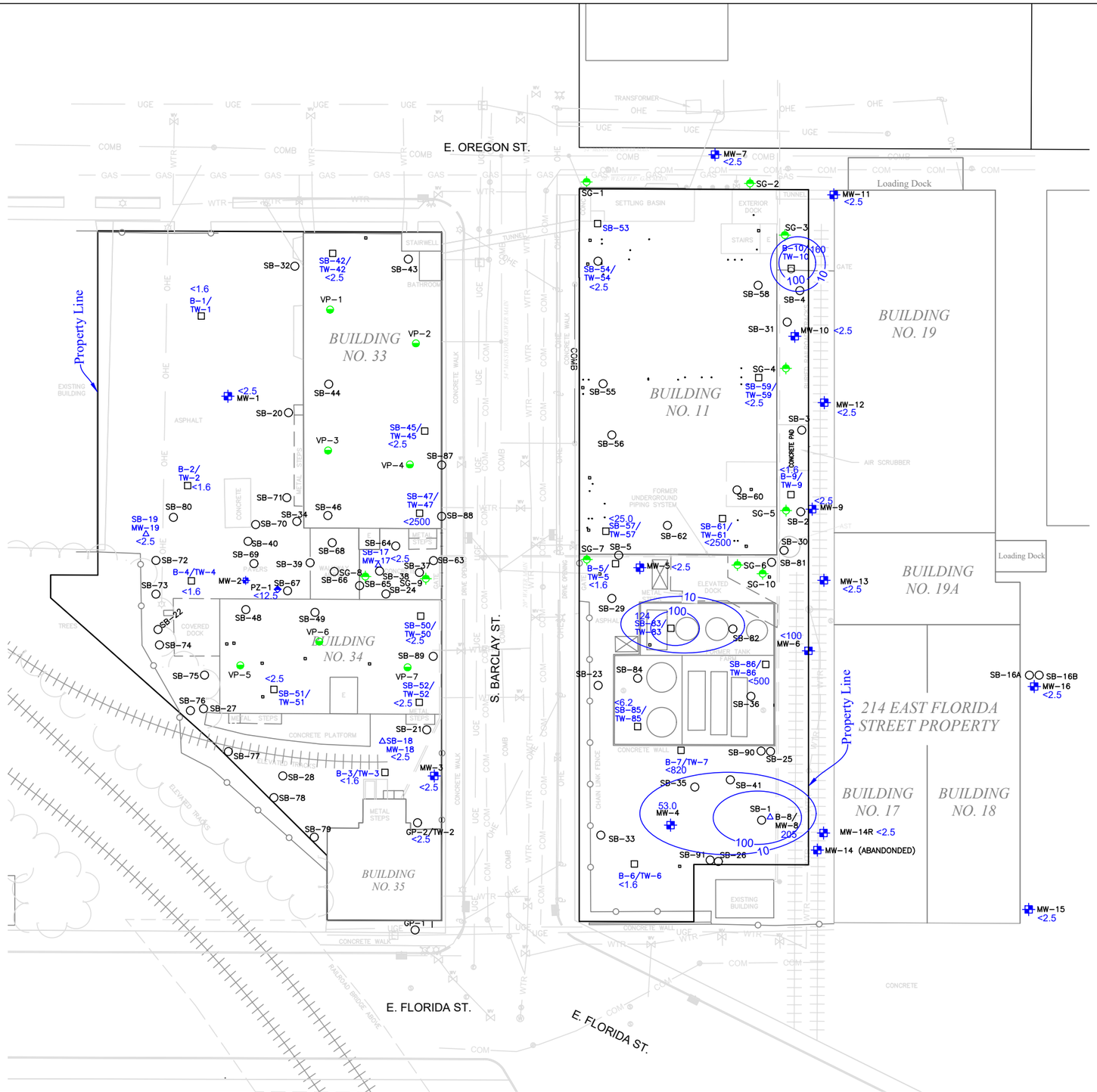


## LEGEND

- SOIL PROBE LOCATION
- TEMPORARY WELL / SOIL BORING
- MONITORING WELL / SOIL BORING
- PIEZOMETER LOCATION
- NEAR SLAB SOIL GAS LOCATION
- SUB- SLAB VAPOR POINTS
- MONITORING WELL LOCATION
- 160 GROUNDWATER NAPHTHALENE CONCENTRATION IN MICROGRAMS PER LITER (µg/L)
- –100– ISOCONCENTRATION CONTOUR
- 10 PREVENTIVE ACTION LIMIT
- 100 ENFORCEMENT STANDARD

NOTE:
MONITORING WELL DATA IS FROM DECEMBER 2015.
TEMPORARYW ELL DATA IS FROM 2006 to 2016.
THE MONITORING & TEMPORARY WELL DATA ARE CONTOURED TOGETHER TO GET A GENERAL SITE-WIDE DISTRIBUTION OF CONTAMINATION.

SCALE IN FEET

50' 0 50'

| REVISION NO. | DESCRIPTION | DATE | BY |
|---|---|---|---|
| | | | |

| | |
|---|---|
| DESIGNED BY TLS | DATE 6/29/17 |
| DRAWN BY RJN | DATE 6/29/17 |
| APPROVED BY KWW | DATE 6/29/17 |

CADFILE G:\ACAD\2505019 – 300 S Barclay st\2017-6-29\BASE FILE BIG.dwg
XREF
LMAN

# FIGURE 19
# GROUNDWATER NAPHTHALENE ISOCONCENTRATION MAP
# WAYNE PIGMENT CORPORATION
## 300 SOUTH BARCLAY STREET
## MILWAUKEE, WISCONSIN

KEY ENGINEERING GROUP LTD.
735 NORTH WATER STREET, SUITE 510
MILWAUKEE, WI 53202
414.224.8300 (tel) • 414.224.8383 (fax)

KEY PROJECT NUMBER 2505019
SCALE 1" = 50'
SHEET NUMBER

Jul 11, 2017 – 9:38am G:\ACAD\2505019 – 300 S Barclay st\2017-6-29\BASE FILE BIG.dwg

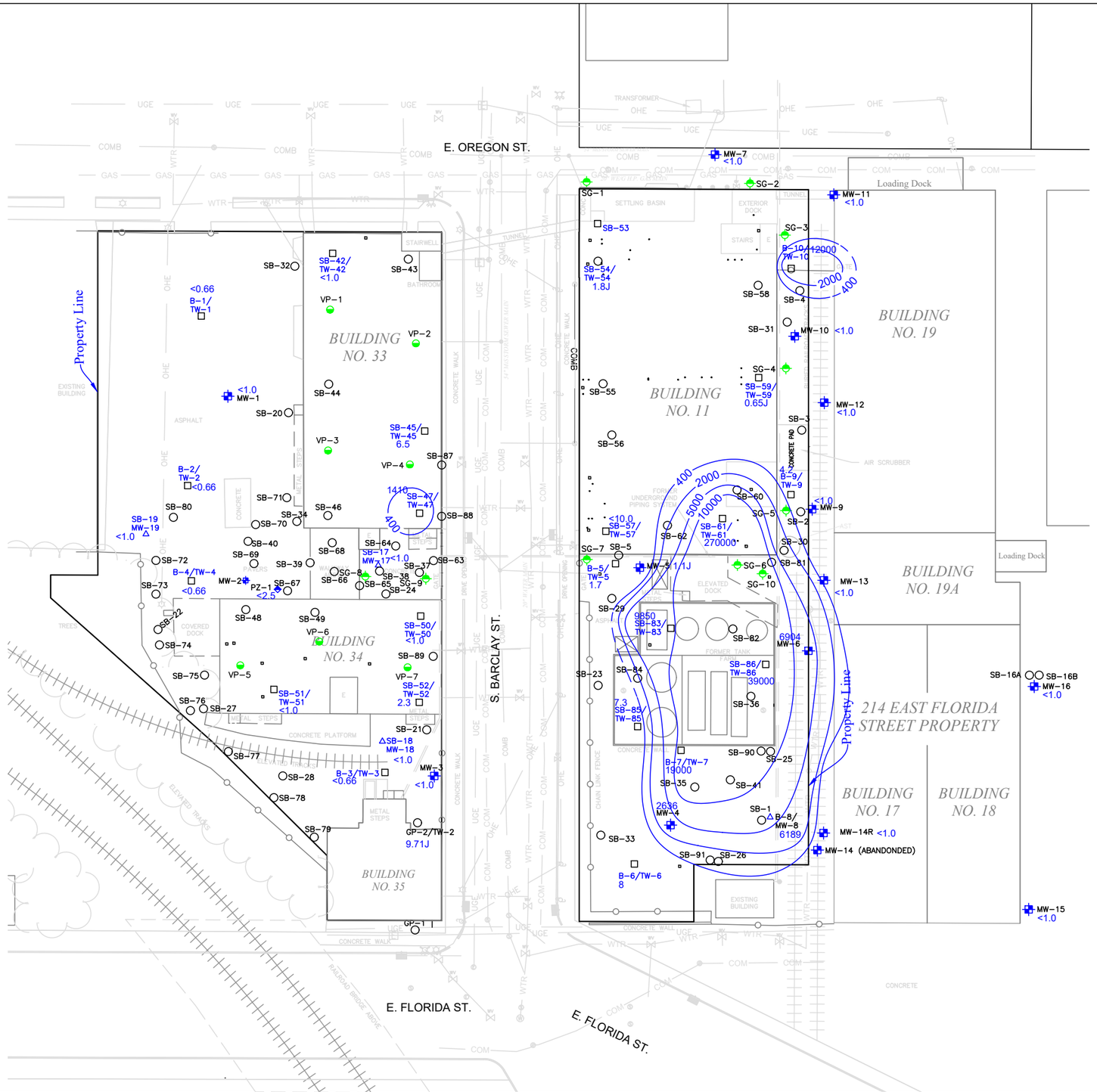


# LEGEND

- SOIL PROBE LOCATION
- TEMPORARY WELL / SOIL BORING
- MONITORING WELL / SOIL BORING
- PIEZOMETER LOCATION
- NEAR SLAB SOIL GAS LOCATION
- SUB- SLAB VAPOR POINTS
- MONITORING WELL LOCATION
- 6904 GROUNDWATER XYLENES CONCENTRATION IN MICROGRAMS PER LITER (µg/L)
- 2000 ISOCONCENTRATION CONTOUR
- 400 PREVENTATIVE ACTION LIMIT
- 2000 ENFORCEMENT STANDARD

NOTE:
MONITORING WELL DATA IS FROM DECEMBER 2015.
TEMPORARYW ELL DATA IS FROM 2006 to 2016.
THE MONITORING & TEMPORARY WELL DATA ARE CONTOURED TOGETHER TO GET A GENERAL SITE-WIDE DISTRIBUTION OF CONTAMINATION.

SCALE IN FEET
50' 0 50'

| REVISION NO. | DESCRIPTION | DATE | BY |
|---|---|---|---|
| | | | |

| | |
|---|---|
| DESIGNED BY TLS | DATE 6/29/17 |
| DRAWN BY RJN | DATE 6/29/17 |
| APPROVED BY KWW | DATE 6/29/17 |
| CADFILE G:\ACAD\2505019 – 300 S Barclay st\2017-6-29\BASE FILE BIG.dwg XREF LMAN | |

# FIGURE 20
# GROUNDWATER XYLENES ISOCONCENTRATION MAP
# WAYNE PIGMENT CORPORATION
## 300 SOUTH BARCLAY STREET
## MILWAUKEE, WISCONSIN

KEY ENGINEERING GROUP LTD.
735 NORTH WATER STREET, SUITE 510
MILWAUKEE, WI 53202
414.224.8300 (tel) • 414.224.8383 (fax)

KEY PROJECT NUMBER 2505019
SCALE 1" = 50'
SHEET NUMBER

Jul 11, 2017 – 9:38am G:\ACAD\2505019 – 300 S Barclay st\2017-6-29\BASE FILE BIG.dwg

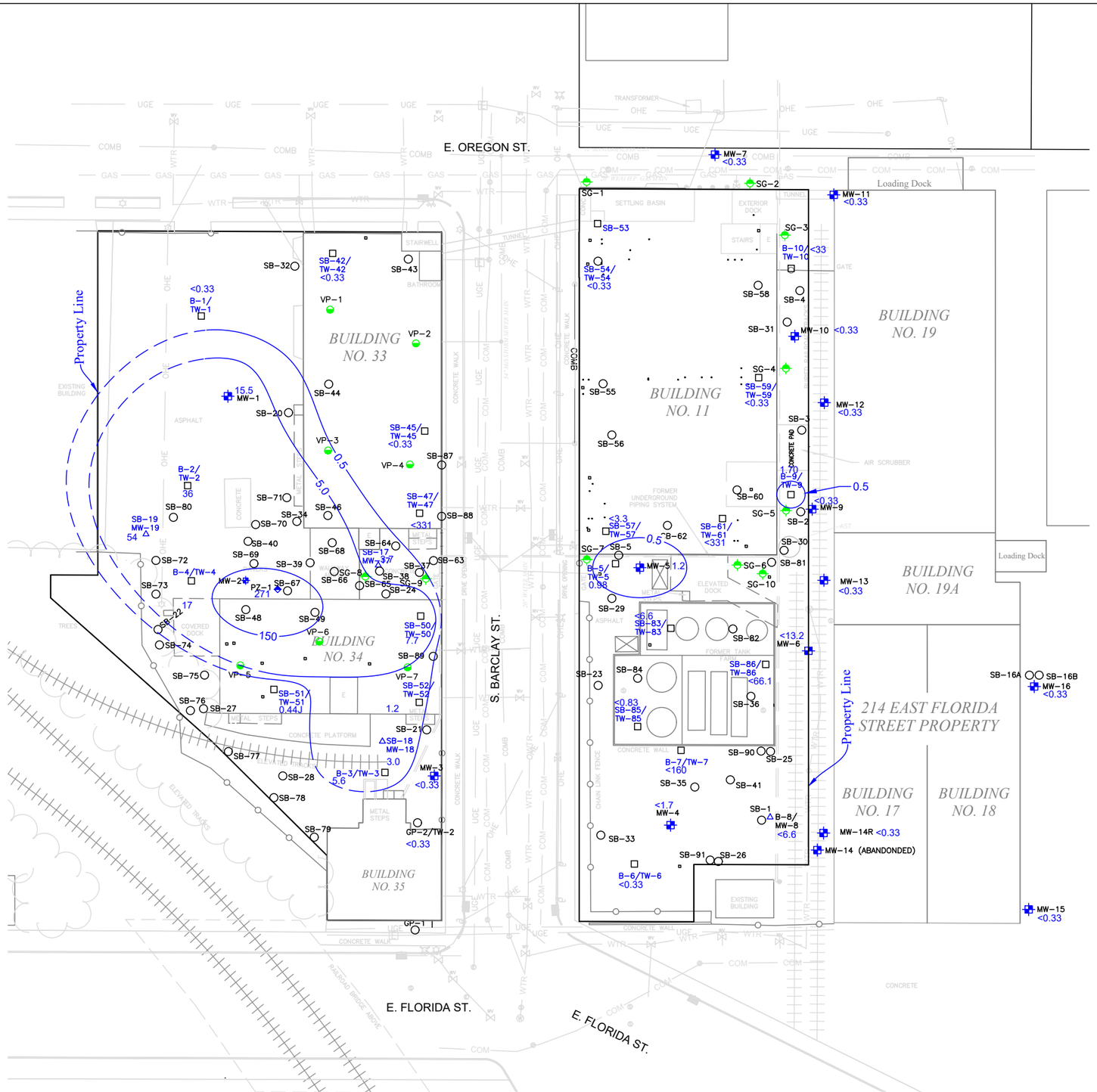


# LEGEND

- SOIL PROBE LOCATION
- TEMPORARY WELL / SOIL BORING
- MONITORING WELL / SOIL BORING
- SUB SLAB VAPOR LOCATION
- NEAR SLAB SOIL GAS LOCATION
- MONITORING WELL LOCATION

7.7 GROUNDWATER TRICHLOROETHENE (TCE) CONCENTRATION IN MICROGRAMS PER LITER (µg/L)

—5.0— ISOCONCENTRATION CONTOUR

0.5 PREVENTATIVE ACTION LIMIT

5.0 ENFORCEMENT STANDARD

NOTE:
MONITORING WELL DATA IS FROM DECEMBER 2015.
TEMPORARYW ELL DATA IS FROM 2006 to 2016.
THE MONITORING & TEMPORARY WELL DATA ARE CONTOURED TOGETHER TO GET A GENERAL SITE-WIDE DISTRIBUTION OF CONTAMINATION.

SCALE IN FEET

50' 0 50'

| REVISION NO. | DESCRIPTION | DATE | BY |
|---|---|---|---|
| | | | |

| | |
|---|---|
| DESIGNED BY TLS | DATE 6/29/17 |
| DRAWN BY RJN | DATE 6/29/17 |
| APPROVED BY KWW | DATE 6/29/17 |

CADFILE G:\ACAD\2505019 – 300 S Barclay st\2017-6-29\BASE FILE BIG.dwg
XREF
LMAN

# FIGURE 21
# GROUNDWATER TRICHLOROETHENE ISOCONCENTRATION MAP
# WAYNE PIGMENT CORPORATION
## 300 SOUTH BARCLAY STREET
## MILWAUKEE, WISCONSIN

KEY ENGINEERING GROUP LTD.
735 NORTH WATER STREET, SUITE 510
MILWAUKEE, WI 53202
414.224.8300 (tel) • 414.224.8383 (fax)

KEY PROJECT NUMBER 2505019

SCALE 1" = 50'

SHEET NUMBER

Jul 11, 2017 – 9:38am G:\ACAD\2505019 – 300 S Barclay st\2017-6-29\BASE FILE BIG.dwg

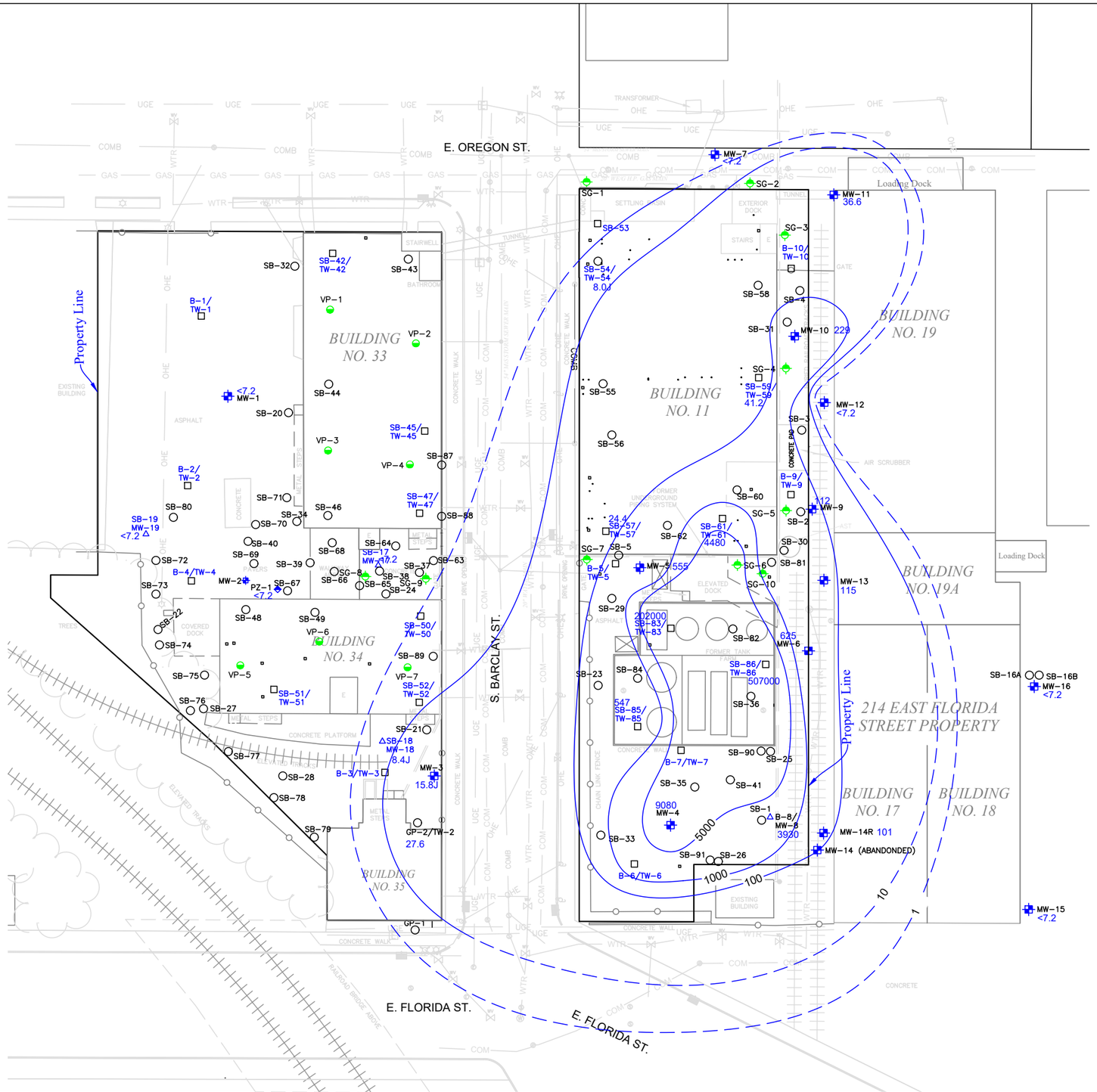


## LEGEND

- SOIL PROBE LOCATION
- TEMPORARY WELL / SOIL BORING
- MONITORING WELL / SOIL BORING
- PIEZOMETER LOCATION
- NEAR SLAB SOIL GAS LOCATION
- SUB- SLAB VAPOR POINTS
- MONITORING WELL LOCATION
- 10.27 GROUNDWATER ARSENIC CONCENTRATION IN MICROGRAMS PER LITER (µg/L)
- —50— ISOCONCENTRATION CONTOUR
- 1 PREVENTATIVE ACTION LIMIT
- 10 ENFORCEMENT STANDARD

NOTE:
MONITORING WELL DATA IS FROM DECEMBER 2015.
TEMPORARYW ELL DATA IS FROM 2006 to 2016.
THE MONITORING & TEMPORARY WELL DATA ARE CONTOURED TOGETHER TO GET A GENERAL SITE-WIDE DISTRIBUTION OF CONTAMINATION.

SCALE IN FEET

50' 0 50'

| REVISION NO. | DESCRIPTION | DATE | BY |
|---|---|---|---|
| | | | |

| | |
|---|---|
| DESIGNED BY TLS | DATE 6/29/17 |
| DRAWN BY RJN | DATE 6/29/17 |
| APPROVED BY KWW | DATE 6/29/17 |
| CADFILE G:\ACAD\2505019 – 300 S Barclay st\2017-6-29\BASE FILE BIG.dwg<br>XREF<br>LMAN | |

# FIGURE 22
# GROUNDWATER DISSOLVED ARSENIC ISOCONCENTRATION MAP
# WAYNE PIGMENT CORPORATION
## 300 SOUTH BARCLAY STREET
## MILWAUKEE, WISCONSIN

KEY ENGINEERING GROUP LTD.
735 NORTH WATER STREET, SUITE 510
MILWAUKEE, WI 53202
414.224.8300 (tel) • 414.224.8383 (fax)

KEY PROJECT NUMBER 2505019

SCALE 1" = 50'

SHEET NUMBER

Jul 11, 2017 – 9:38am G:\ACAD\2505019 – 300 S Barclay st\2017-6-29\BASE FILE BIG.dwg

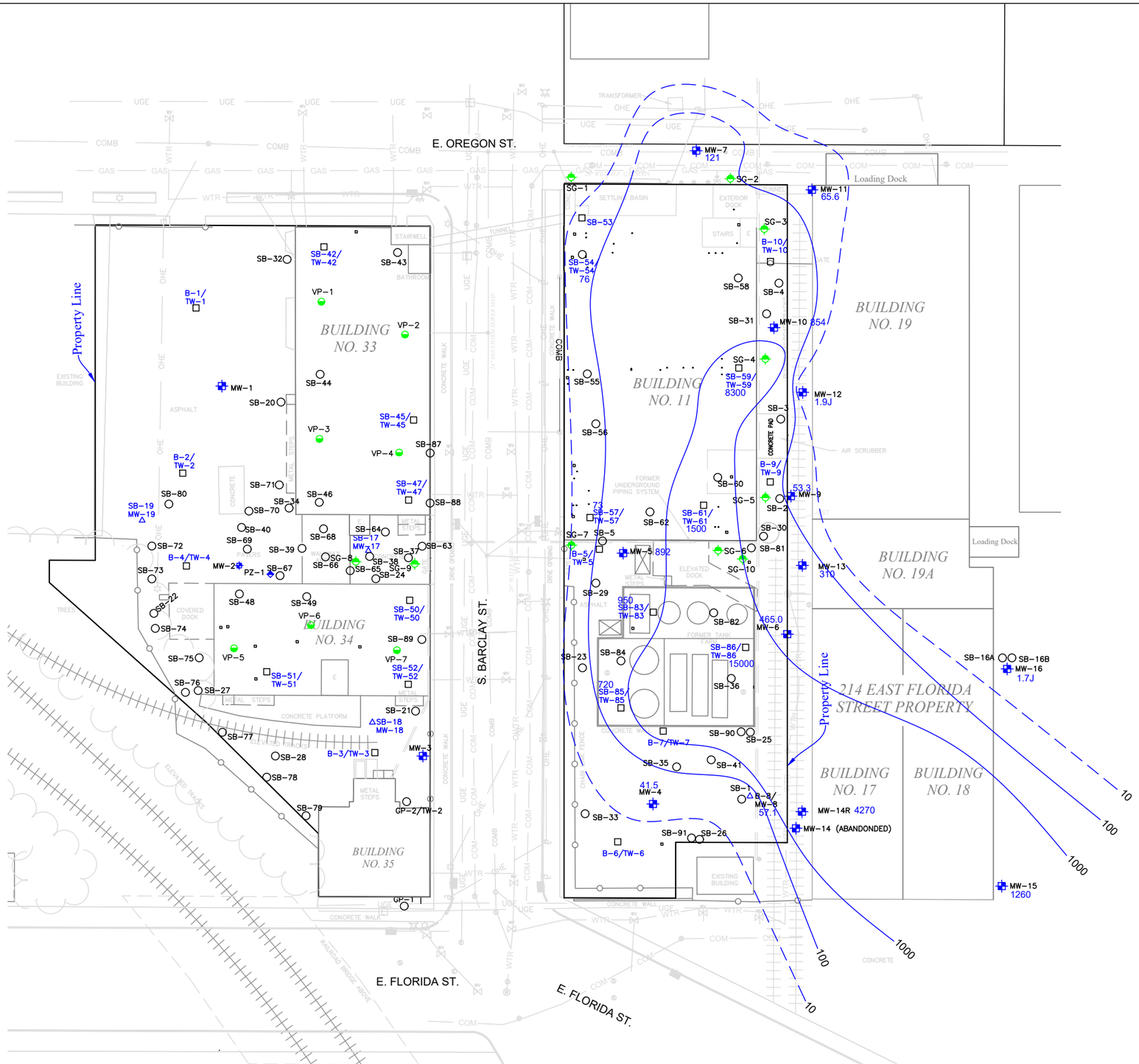


# LEGEND

- SOIL PROBE LOCATION
- TEMPORARY WELL / SOIL BORING
- MONITORING WELL / SOIL BORING
- PIEZOMETER LOCATION
- NEAR SLAB SOIL GAS LOCATION
- SUB- SLAB VAPOR POINTS
- MONITORING WELL LOCATION
- 310 GROUNDWATER TOTAL CHROMIUM CONCENTRATION IN MICROGRAMS PER LITER (µg/L)
- –100– ISOCONCENTRATION CONTOUR
- 10 PREVENTATIVE ACTION LIMIT
- 100 ENFORCEMENT STANDARD

NOTE:
MONITORING WELL DATA IS FROM DECEMBER 2015.
TEMPORARYW ELL DATA IS FROM 2006 to 2016.
THE MONITORING & TEMPORARY WELL DATA ARE CONTOURED TOGETHER TO GET A GENERAL SITE-WIDE DISTRIBUTION OF CONTAMINATION.

SCALE IN FEET
50' 0 50'

| REVISION NO. | DESCRIPTION | DATE | BY |
|---|---|---|---|
| | | | |

| | |
|---|---|
| DESIGNED BY TLS | DATE 6/29/17 |
| DRAWN BY RJN | DATE 6/29/17 |
| APPROVED BY KWW | DATE 6/29/17 |
| CADFILE G:\ACAD\2505019 – 300 S Barclay st\2017-6-29\BASE FILE BIG.dwg<br>XREF<br>LMAN | |

# FIGURE 23
# GROUNDWATER TOTAL CHROMIUM ISOCONCENTRATION MAP
## WAYNE PIGMENT CORPORATION
### 300 SOUTH BARCLAY STREET
### MILWAUKEE, WISCONSIN

KEY ENGINEERING GROUP LTD.
735 NORTH WATER STREET, SUITE 510
MILWAUKEE, WI 53202
414.224.8300 (tel) • 414.224.8383 (fax)

KEY PROJECT NUMBER 2505019
SCALE 1" = 50'
SHEET NUMBER

Jul 11, 2017 – 10:45am G:\ACAD\2505019 – 300 S Barclay st\2017-6-29\BASE FILE BIG.dwg

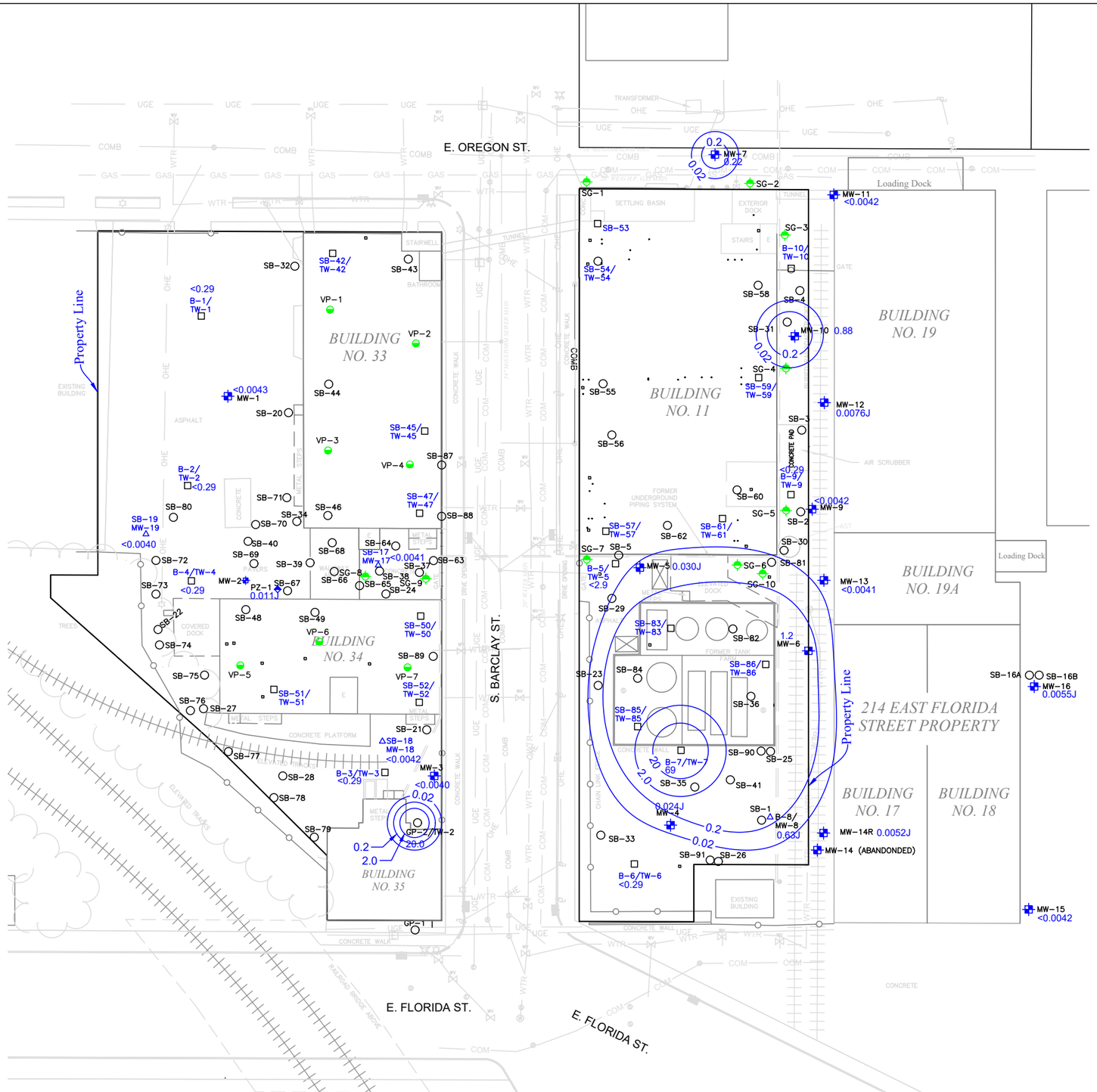


# LEGEND

- SOIL PROBE LOCATION
- TEMPORARY WELL / SOIL BORING
- MONITORING WELL / SOIL BORING
- PIEZOMETER LOCATION
- NEAR SLAB SOIL GAS LOCATION
- SUB- SLAB VAPOR POINTS
- MONITORING WELL LOCATION
- 0.71 GROUNDWATER BENZO(A)PYRENE CONCENTRATION IN MICROGRAMS PER LITER (µg/L)
- 0.2 ISOCONCENTRATION CONTOUR
- 0.02 PREVENTATIVE ACTION LIMIT
- 0.2 ENFORCEMENT STANDARD

NOTE:
MONITORING WELL DATA IS FROM DECEMBER 2015.
TEMPORARYW ELL DATA IS FROM 2006 to 2016.
THE MONITORING & TEMPORARY WELL DATA ARE CONTOURED TOGETHER TO GET A GENERAL SITE-WIDE DISTRIBUTION OF CONTAMINATION.

SCALE IN FEET
50' 0 50'

| REVISION NO. | DESCRIPTION | DATE | BY |
|---|---|---|---|
| | | | |

| | |
|---|---|
| DESIGNED BY TLS | DATE 6/29/17 |
| DRAWN BY RJN | DATE 6/29/17 |
| APPROVED BY KWW | DATE 6/29/17 |
| CADFILE G:\ACAD\2505019 – 300 S Barclay st\2017-6-29\BASE FILE BIG.dwg<br>XREF<br>LMAN | |

# FIGURE 24
# GROUNDWATER BENZO(A)PYRENE ISOCONCENTRATION MAP
# WAYNE PIGMENT CORPORATION
## 300 SOUTH BARCLAY STREET
## MILWAUKEE, WISCONSIN

KEY ENGINEERING GROUP LTD.
735 NORTH WATER STREET, SUITE 510
MILWAUKEE, WI 53202
414.224.8300 (tel) • 414.224.8383 (fax)

KEY PROJECT NUMBER 2505019
SCALE 1" = 50'
SHEET NUMBER

Jul 11, 2017 – 9:38am G:\ACAD\2505019 – 300 S Barclay st\2017-6-29\BASE FILE BIG.dwg

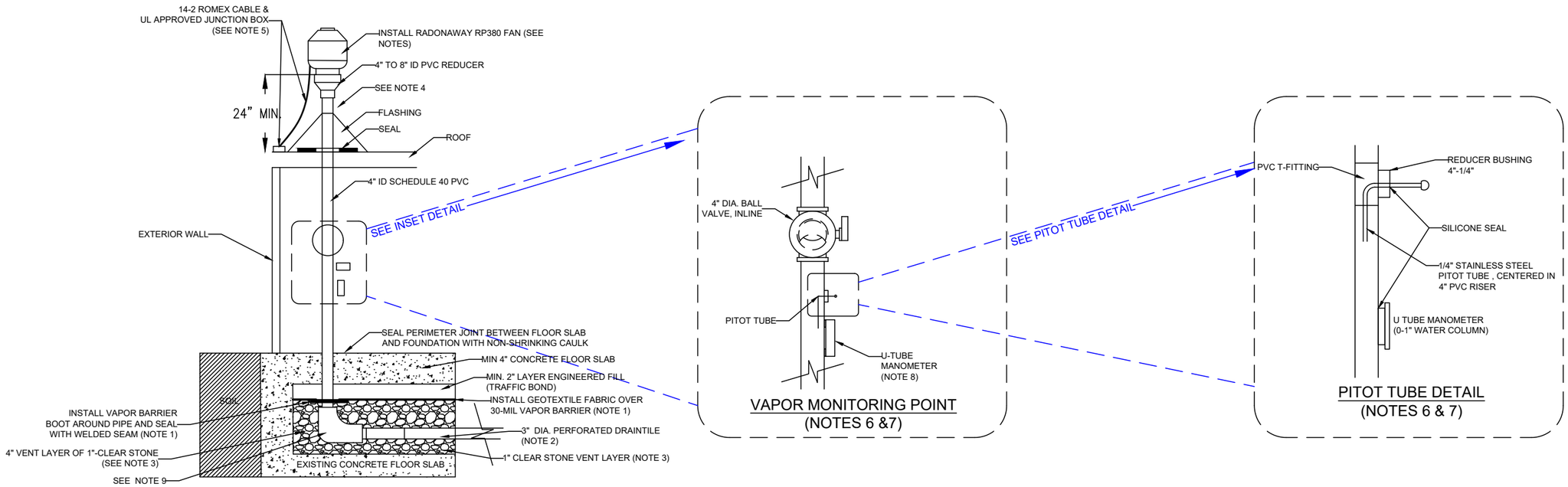


ROOF VENT PIPE AND SLAB PENETRATION DETAIL

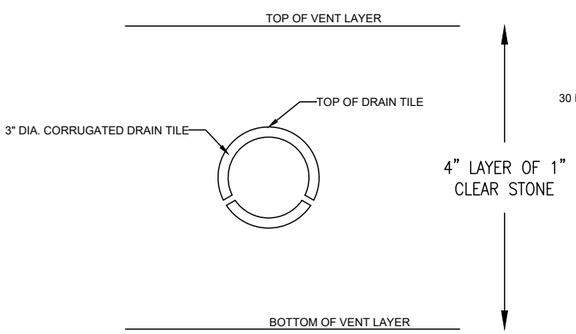


SUB-SLAB PERFORATED VENT PIPE

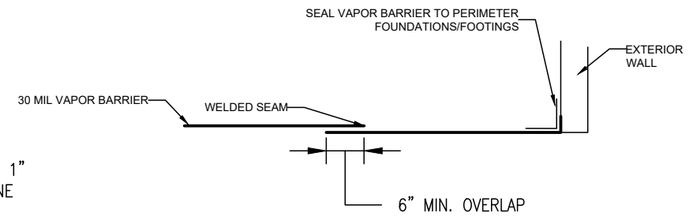


VAPOR BARRIER SEAM

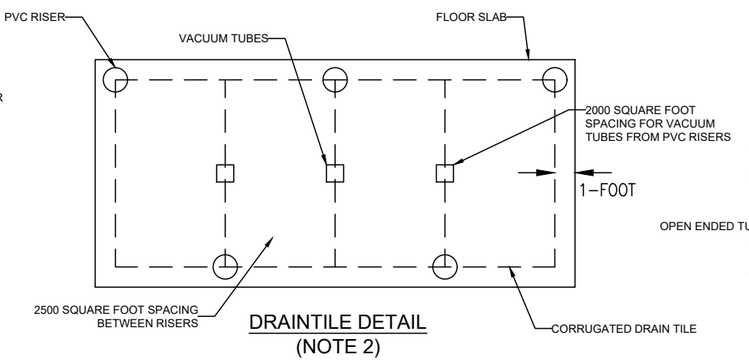


DRAINTILE DETAIL
(NOTE 2)

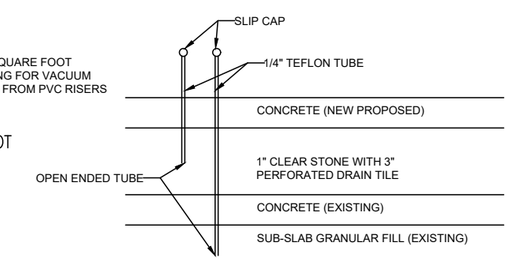


VACUUM POINT DETAIL

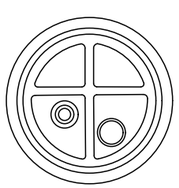

RADON/SUMP DOME SEALED

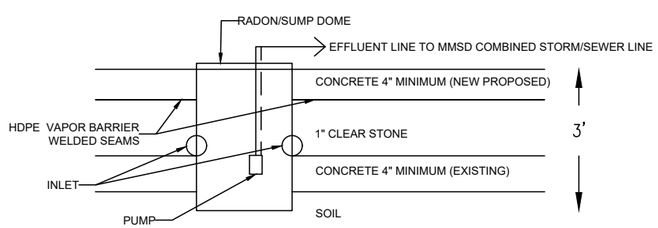


SUMP DETAIL

NOTES:

1. FOLLOW MANUFACTURER DIRECTIONS TO INSTALL 30-MIL WELDED-SEAM HDPE VAPOR BARRIER. INSTALL 6 OZ. NON-WOVEN GEOTEXTILE FABRIC ABOVE VAPOR BARRIER TO PROVIDE PROTECTION FOR BARRIER. ALL NEW CONCRETE FLOOR PENETRATIONS SHOULD HAVE A VAPOR BARRIER BOOT AROUND PIPE AND SEAL WITH VAPOR BARRIER TAPE.

2. INSTALL 3" DIAMETER CORRUGATED DRAIN TILE AS SHOWN ON DETAIL. FOR PIPE PERFORATION MAINTAIN UNIFORM PIPE ELEVATION FOR EACH SEPARATE PIPING RUN.

3. METHANE VENT LAYER SHALL BE 1-INCH CLEAR STONE.

4. LOCATE EXTERIOR GAS VENTS MIN 10' FROM AIR INTAKES OR OTHER OPENINGS SUCH AS WINDOWS AND DOORS.

5. INSTALL RADONAWAY RP380 FAN (8" DIAMETER). LICENSED ELECTRICIAN REQUIRED FOR INSTALLATION. EACH FAN SHOULD HAVE ITS OWN CIRCUIT BREAKER. FOR POWER FEED, USE 14-2 ROMEX CABLE TO SINGLE GANG UL LISTED JUNCTION BOX AT ROOF LEVEL. ONE FAN PER 2,500 SQUARE FOOT OF FIRST FLOOR SPACE. BUILDING 11 WILL HAVE 7 FANS.

6. INTERIOR VENT PIPE SECTIONS SHALL BE IDENTIFIED WITH AT LEAST ONE LABEL ON EACH FLOOR LEVEL. LABEL SHALL READ "SUB-SLAB VENT SYSTEM".

7. INSTALL METAL ACCESS PLATE ON INTERIOR WALL TO ACCESS EACH VAPOR MONITORING POINT AND PAIRED VACUUM TUBES.

8. INSTALL A U-TUBE MANOMETER TYPE PRESSURE GAUGE ON VERTICAL VENT PIPE RUN, INSIDE INTERIOR WALLS, INLINE WITH BALL VALVE AND COMPRESSION FITTING, WITHIN WALL RECEPTACLE BOX WITH REMOVABLE COVER.

9. USE 90 DEGREE PVC ELBOW TO CONNECT 4" SCH 40 PVC TO PVC CORRUGATED DRAIN TILE.

| REVISION NO. | DESCRIPTION | DATE | BY |
|---|---|---|---|
| | | | |

| | |
|---|---|
| DESIGNED BY TLS | DATE 6/29/17 |
| DRAWN BY RJN | DATE 6/29/17 |
| APPROVED BY KWW | DATE 6/29/17 |

CADFILE G:\ACAD\2505019 – 300 S Barclay st\2017-6-29\BASE FILE BIG.dwg
XREF
LMAN

# FIGURE 25
# BULDING 11 ACTIVE VAPOR MITIGATION SYSTEM DESIGN
# WAYNE PIGMENT CORPORATION
## 300 SOUTH BARCLAY STREET & 139 EAST OREGON STREET
## MILWAUKEE, WISCONSIN

KEY ENGINEERING GROUP LTD.
735 NORTH WATER STREET, SUITE 510
MILWAUKEE, WI 53202
414.224.8300 (tel) - 414.224.8383 (fax)

KEY PROJECT NUMBER 2505019
SCALE NTS
SHEET NUMBER

Jul 10, 2017 – 2:17pm G:\ACAD\2505019 – 300 S Barclay st\2017-6-29\BASE FILE BIG.dwg

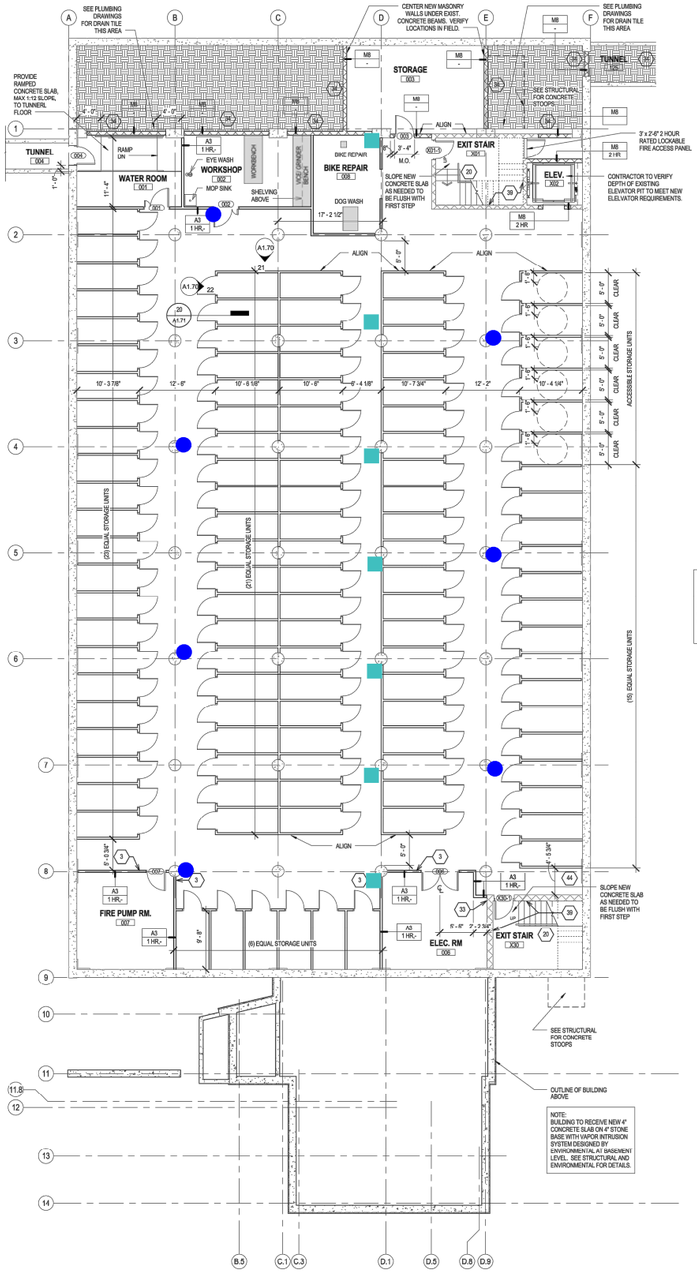


2 NEW WORK PLAN - BASEMENT LEVEL - EAST BUILDING

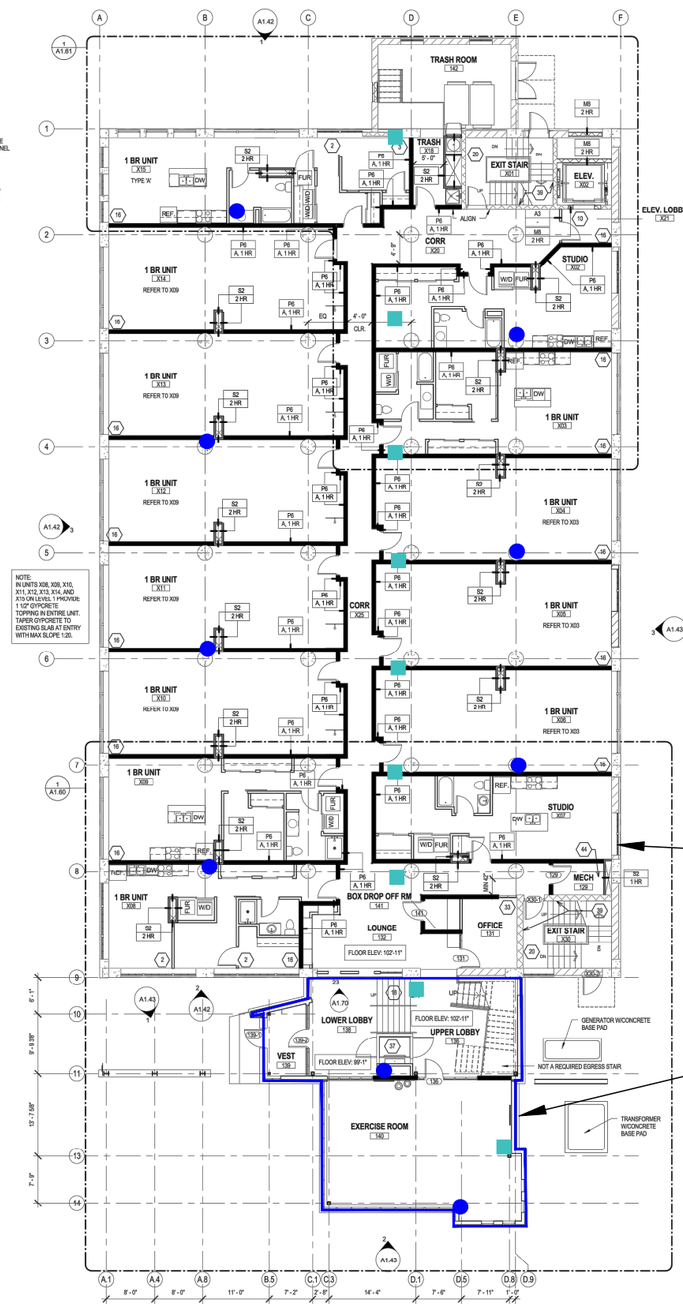


NOTE:
IN UNITS X08, X09, X10, X11, X12, X13, X14, AND X15 ON LEVEL 1 PROVIDE 1 1/2" GYPCRETE TOPPING IN ENTIRE UNIT. TAPER GYPCRETE TO EXISTING SLAB AT ENTRY WITH MAX SLOPE 1:20.

1 NEW WORK PLAN - LEVEL 1 - EAST BUILDING

## GENERAL FLOOR PLAN NOTES TO CONTRACTOR

1. THIS DRAWING IS FURTHER SUPPORTED BY INFORMATION CONTAINED IN THE SPECIFICATION MANUAL.
2. THE CIVIL, STRUCTURAL, MECHANICAL, ELECTRICAL, PLUMBING, FIRE PROTECTION, AUDIO-VISUAL, AND SECURITY DRAWINGS ARE SUPPLEMENTARY TO THE ARCHITECTURAL DRAWINGS. IT SHALL BE THE RESPONSIBILITY OF THE CONTRACTOR TO COORDINATE THE INFORMATION CONTAINED IN ALL THE DRAWINGS BEFORE THE INSTALLATION OF ALL WORK.
3. DO NOT SCALE DRAWINGS. CONTRACTOR TO VERIFY ALL CONDITIONS AND DIMENSIONS AT THE JOB SITE PRIOR TO COMMENCING CONSTRUCTION.
4. FINISH FLOOR ELEVATIONS ARE TO THE TOP OF THE FINISHED FLOOR MATERIAL UNLESS OTHERWISE NOTED.
5. CONTRACTORS SHALL JOINTLY PROVIDE AND INSTALL ALL STIFFENERS, BRACING, BACKING PLATES, WALL BLOCKING AND SUPPORTING BRACKETS REQUIRED FOR THE INSTALLATION OF CASEWORK, TOILET ACCESSORIES, PARTITIONS, MILLWORK, AND ALL WORK MOUNTED OR SUSPENDED BY ALL TRADES.
6. SEE SHEET A0.02 FOR PARTITION TYPES AND DETAILS.
7. DIMENSIONS AT EXTERIOR WALLS ARE TO STRUCTURAL WALL ONLY AND DO NOT INCLUDE FINISHES.

## NEW WORK LEGEND

- EXISTING TO REMAIN
- MASONRY PARTITION, SEE PARTITION TYPES FOR DETAILS
- RATED CORRIDOR AND UNIT DEMISING PARTITION, SEE PARTITION TYPES FOR DETAILS
- X — NEW WORK KEY NOTE

## NEW WORK PLAN KEY NOTES

**SEE PROJECT GENERAL CONDITIONS, GENERAL INFORMATION ON SHEET A001 AND SELECTIVE DEMOLITION, CUTTING AND PATCHING SPECIFICATIONS THAT ARE USED IN ASSOCIATION WITH THESE NOTES.**

**NEW WORK PLAN KEY NOTES APPLY TO ALL NEW WORK DRAWINGS AND MAY NOT BE USED ON EVERY SHEET.**

| | |
|---|---|
| 1 | PROVIDE EXTRA 1/2" LAYER OF GWB AT ALL FIRE RATED PARTITIONS SURROUNDING BATHTUBS AND SHOWERS |
| 2 | ALIGN PARTITION WITH CENTER OF WINDOW MULLION. |
| 3 | ALIGN CENTER OF WALL WITH COLUMN GRID LINE EXISTING |
| 4 | WALLS TO EXTEND TO 4'-0" A.F.F. FINISH TOP OF LEDGE WITH GWV AND PAINT PT-1 |
| 5 | SHAFT OPENING, COORDINATE WITH MEP AND STRUCTURAL DRAWINGS |
| 6 | SEE A0.01 FOR IN-WALL BLOCKING REQUIREMENTS AT SHOWERS AND BATHTUBS |
| 7 | EXISTING MASONRY WALL TO REMAIN EXPOSED AND UNPAINTED |
| 8 | MECHANICAL SHAFT. PROVIDE 2-HR RATED SHAFT WALL SC ALL AROUND THE ACOUSTIC INSULATION. ALIGN FINISH FACES OF GWB ON ADJACENT WALLS. COORDINATE EXACT SIZE AND REQUIREMENTS WITH MECHANICAL DRAWINGS. SHAFT TO TERMINATE ABOVE FIRST FLOOR CEILINGS IN UNITS. COORDINATE SHAFT OPENINGS WITH STRUCTURAL DRAWINGS. |
| 9 | ROOM TO BE ABANDONED. ALL EXISTING CONDITIONS/FINISHES TO REMAIN AS IS. |
| 10 | INFILL WALL OPENING, AS NEEDED, TO ACCOMODATE ELEVATOR DOOR. V.I.F. |
| 11 | INFILL WALL OPENING BETWEEN LEVEL 1 AND LEVEL 2. |
| 12 | INFILL ALL OPENINGS BETWEEN SKYLIGHT AND PENTHOUSE WALL WITH FIRE RATED CMU. LOCATIONS ARE DIAGRAMMATIC; VERIFY IN FIELD. SEE 1/A1.24 AND 10/1.71. |
| 13 | NEW EXHAUST FAN. COORDINATE LOCATION WITH MECHANICAL. |
| 14 | INFILL EXISTING OPENING WITH CMU MASONRY INFILL SET BACK 1" FROM EXTERIOR FACE OF ADJACENT WALL. |
| 15 | NEW GRATED STEEL STAIR ASSEMBLY WITH 42" HIGH GUARDRAILS GR-1 AND ASSOCIATED HANDRAILS. TYP. FOR STAIRS IN BUILDING 11 SEE DETAILS ON SHEET A1.75. FOR STAIRS IN BUILDINGS 33 & 34 SEE DETAILS ON SHEET A2.75. |
| 16 | ALIGN FACE OF WALL WITH EDGE OF CONCRETE COLUMN. |
| 17 | 4" DEEP ALUMINUM FRAMED STOREFRONT SYSTEM, 9'-0" TALL, W/ 1/4" TEMPERED CENTER GLAZING, TYP. |
| 18 | CONCRETE FILLED METAL PAN STAIR SYSTEM, WITH METAL HANDRAIL. |
| 19 | ADDITIONAL LAYER 5/8" GYP. BD. |
| 20 | PROVIDE NEW METAL GUARDRAIL GR-2 SURFACE MOUNTED TO OPEN SIDE OF STAIRS AND LANDINGS. EXISTING HANDRAIL TO REMAIN. FOR STAIRS IN BUILDING 11 SEE DETAILS ON SHEET A1.75. FOR STAIRS IN BUILDINGS 33 & 34 SEE DETAILS ON SHEET A2.75. |
| 21 | REPAIR & CLEAN EXIST. WINDOW ASSY. REPLACE EXIST. BROKEN GLAZING, PROVIDE INSULATED METAL PANEL ON INSIDE OF WINDOW. |
| 22 | INFILL OPENING WITH BRICK TO MATCH EXISTING. RECESS BRICK 1" FROM FACE OF EXISTING BRICK WALL. TYP. |
| 23 | EXISTING CONCRETE TOPPING TO BE MODIFIED AND SLOPED AS NEEDED TO MATCH ELEVATION AT ELEVATOR LANDING. |
| 24 | EXISTING METAL STAIR TO REMAIN, PAINT PT-X TYP. |
| 25 | PAINTED 1 1/2" DIAMETER STEEL FLOOR-MOUNTED HANDRAIL W/ 1'-0" EXTENSIONS AT TOP & BOTTOM. MOUNT TOP OF HANDRAIL 38" ABOVE STAIR TREAD. |
| 26 | CONCRETE FLOOR SLAB W EPDM WATER PROOF MEMEBRANE. FLASHING. AND WOOD DECK FOR WATER TIGHT BALCONY FLOOR. TYP. |
| 27 | REPAIR/PATCH EXIST. CONCRETE ROOF EDGE @ PENTHOUSE. |
| 28 | METAL STUD WALL 42" HIGH WITH WOOD WALL CAP. FINISH TO MATCH ADJACENT STAIR TREADS AND RAILING. |
| 29 | INSTALL SALVAGED DOUBLE DOOR AND DOOR CLOSER. SCRAPE LOOSE PAINT, CLEAN AND PAINT PT-X. |
| 30 | PROVIDE 18" DEEP EPOXY COATED WIRE SHELVING WITH METAL CLOSET POLE TO HANG CLOTHES IN ALL CLOSETS, TYP. AT ADA UNITS PROVIDE 3'-0" SECTION METAL CLOSET POLE NOT HIGHER THAN 54". |
| 31 | FEATHER NEW GYPCRETE AS NEEDED TO MATCH ELEVATION AT ELEVATOR LANDING. SEE FINISH SCHEDULE FOR FLOOR FINISH. |
| 32 | NEW PRIMED AND PAINTED 42" TALL STEEL GUARDRAIL. SEE DETAIL 6/A2.75. |
| 33 | REPAIR EXIST. MASONRY WALL TO MAINTAIN 2 HR. FIRE RATING. |
| 34 | NEW 2" RIGID INSULATION OVER DRAINAGE PANELS AND DAMP PROOFING OVER NEW 8" MASONRY WALL |
| 35 | NEW STEEL AND WOOD STAIR ASSEMBLY WITH OPEN RISERS AND 36" HIGH HANDRAIL/GUARDRAIL GR-3 ON BOTH SIDES. SEE DETAILS ON SHEET A2.75. MAINTAIN 3'-0" CLEAR AT WALKING SURFACE. |
| 36 | NEW AUX DRAINAGE FROM ROOF. |
| 37 | ADA COMPLIANT ENCLOSED PLATFORM LIFT W/RECESSED PIT. SHAFTWAY WALLS TO TERMINATE AT 42" MIN. ABOVE UPPER LOBBY LEVEL WITH EQUAL HEIGHT ENTRY/EXIT DOOR AT UPPER LOBBY LEVEL. DOORS PROVIDED BY LIFT MANUFACTURER. |
| 38 | NEW 20 GA. SS CHUTE SLIDE EXTENSION, FIELD MEASURE AND FABRICATE TO FIT AROUND TRASH CHUTE. |
| 39 | PATCH ALL PENETRATIONS IN EXISTING STAIR SHAFT & ELEVATOR. WALLS TO MAINTAIN 2 HR FIRE RESISTANCE RATING. |
| 40 | PROVIDE NEW METAL AND WOOD GUARDRAIL GR-4 MOUNTED TO BOTH SIDES OF STAIRS AND LANDINGS. SEE ELEVATIONS AND DETAILS FOR GUARDRAIL AND STAIR CONSTRUCTION ON SHEET A1.75. |
| 41 | INFILL EXISTING OPENING WITH CMU MASONRY AND BRICK. BRICK INFILL ON EXTERIOR FACE TO BE SET BACK 1" FROM EXTERIOR FACE OF ADJACENT WALL. BRICK TO MATCH ADJACENT. |
| 42 | PRE-MANUFACTURED 18"X24"X4" RECESSED MEDICINE CABINET WITH MIRRORED DOOR (ALTERNATE). PROVIDE SURFACE MOUNTED AT RATED OR CORRIDOR WALLS. |
| 43 | PROVIDE ALLOWANCE FOR MOVEABLE KITCHEN ISLAND. |
| 44 | PROVIDE (2) 1" CONDUIT FROM CEILING IN BASEMENT LEVEL TO ROOF AREA FOR FUTURE USE. CAP CONDUIT TO BE WATER TIGHT. |
| 45 | EXISTING MASONRY BRICK SILL TO BE REBUILT/REPAIRED FOR NEW WINDOW INSTALLATION. PROVIDE CEMENTITIOUS CASTING/PARGING ON TOP OF SILL TO MATCH EXISTING, TYP. AT ALL WINDOWS. |
| 46 | PROVIDE (2) 1" CONDUIT FROM CEILING ON FIRST FLOOR TO ROOF AREA FOR FUTURE USE. CAP CONDUIT TO BE WATER TIGHT. |

- EXAMPLE LOCATION OF VERTICAL PVC RISER (ROOF PENETRATION WITH FAN)
- EXAMPLE LOCATION OF WHERE VACUUM TUBES WOULD BE INSTALLED

BUILDING 11

NEW BUILDING

SCALE IN FEET
25' 0 25'

| REVISION NO. | DESCRIPTION | DATE | BY |
|---|---|---|---|
| | | | |

| | |
|---|---|
| DESIGNED BY TLS | DATE 6/29/17 |
| DRAWN BY RJN | DATE 6/29/17 |
| APPROVED BY KWW | DATE 6/29/17 |
| CADFILE C:\Users\ctowles\appdata\local\temp\AcPublish_13424\BASE FILE BIG.dwg XREF LMAN | |

# FIGURE 26
# BUILDING 11 AND NEW BUILDING VAPOR MITIGATION SYSTEM FLOOR PLAN
## WAYNE PIGMENT CORPORATION
### 300 SOUTH BARCLAY STREET
### MILWAUKEE, WISCONSIN

KEY ENGINEERING GROUP LTD.
735 NORTH WATER STREET, SUITE 510
MILWAUKEE, WI 53202
414.224.8300 (tel) - 414.224.8383 (fax)

KEY PROJECT NUMBER 2505019
SCALE 1" = 50'
SHEET NUMBER

Jun 29, 2017 – 3:57pm C:\Users\ctowles\appdata\local\temp\AcPublish_13424\BASE FILE BIG.dwg

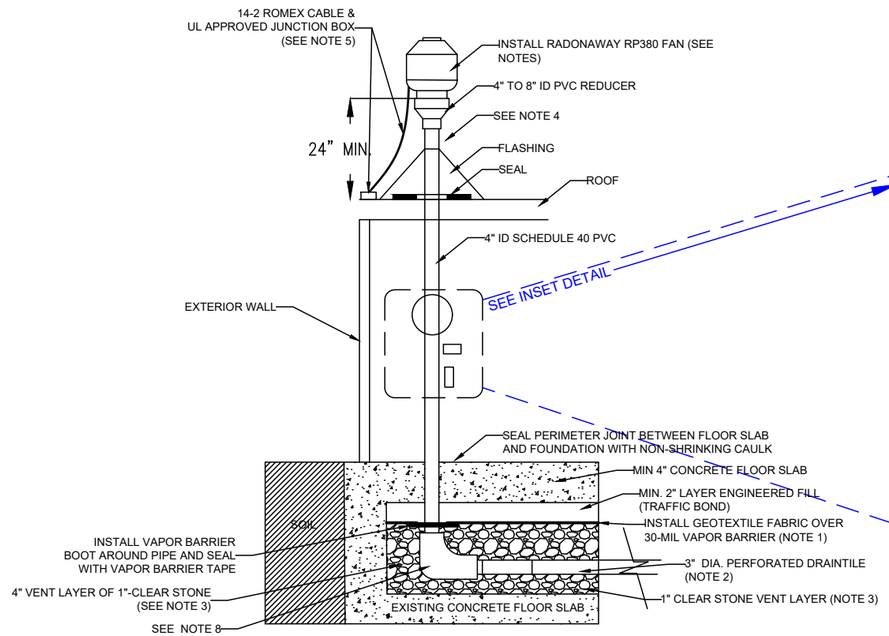


ROOF VENT PIPE AND SLAB PENETRATION DETAIL

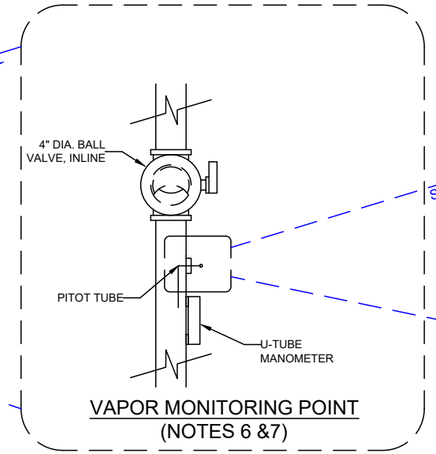


VAPOR MONITORING POINT
(NOTES 6 &7)

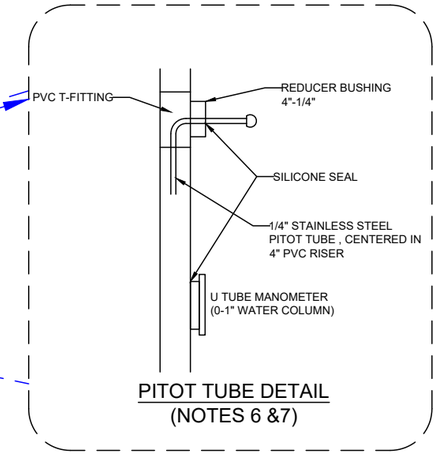


PITOT TUBE DETAIL
(NOTES 6 &7)

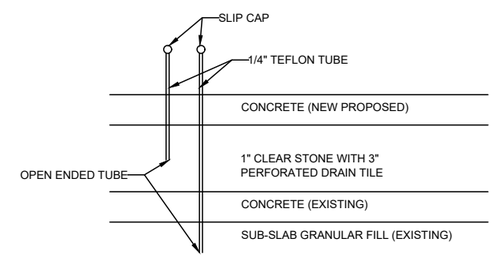


VACUUM POINT DETAIL

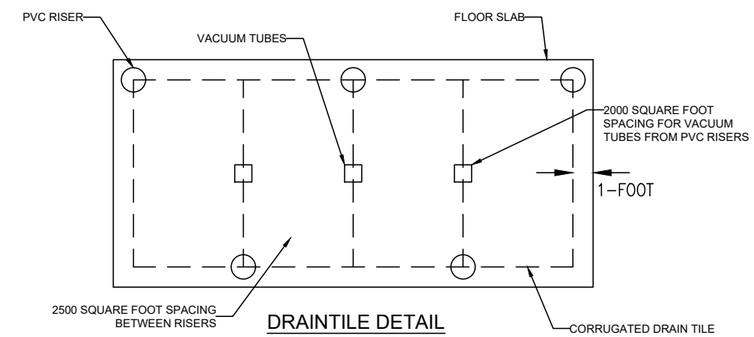


DRAINTILE DETAIL
(NOTE 2)

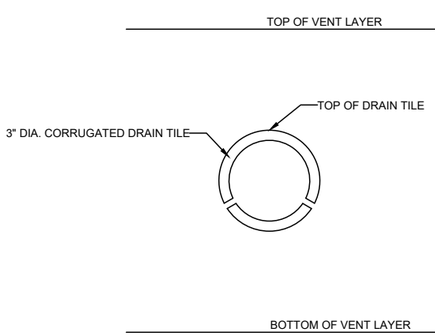


SUB-SLAB PERFORATED VENT PIPE

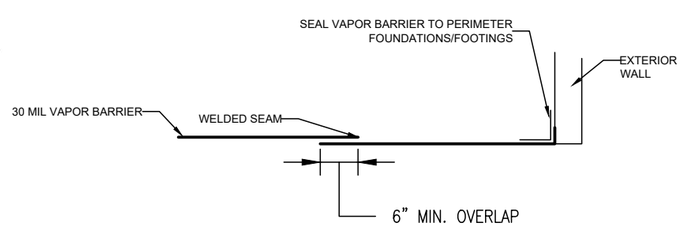


VAPOR BARRIER SEAM

NOTES:

1. FOLLOW MANUFACTURER DIRECTIONS TO INSTALL 30-MIL WELDED-SEAM HDPE VAPOR BARRIER. INSTALL 6 OZ. NON-WOVEN GEOTEXTILE FABRIC ABOVE VAPOR BARRIER TO PROVIDE PROTECTION FOR BARRIER. ALL NEW CONCRETE FLOOR PENETRATIONS SHOULD HAVE A VAPOR BARRIER BOOT AROUND PIPE AND SEAL WITH VAPOR BARRIER TAPE.

2. INSTALL 3" DIAMETER CORRUGATED DRAIN TILE AS SHOWN ON DETAIL. FOR PIPE PERFORATION MAINTAIN UNIFORM PIPE ELEVATION FOR EACH SEPARATE PIPING RUN.

3. METHANE VENT LAYER SHALL BE 1-INCH CLEAR STONE.

4. LOCATE EXTERIOR GAS VENTS MIN 10' FROM AIR INTAKES OR OTHER OPENINGS SUCH AS WINDOWS AND DOORS.

5. INSTALL RADONAWAY RP380 FAN (8" DIAMETER). LICENSED ELECTRICIAN REQUIRED FOR INSTALLATION. EACH FAN SHOULD HAVE ITS OWN CIRCUIT BREAKER. FOR POWER FEED, USE 14-2 ROMEX CABLE TO SINGLE GANG UL LISTED JUNCTION BOX AT ROOF LEVEL. ONE FAN PER 2,500 SQUARE FOOT OF FIRST FLOOR SPACE. BUILDINGS 33 AND 34 WILL HAVE 4 FANS EACH.

6. INTERIOR VENT PIPE SECTIONS SHALL BE IDENTIFIED WITH AT LEAST ONE LABEL ON EACH FLOOR LEVEL. LABEL SHALL READ "SUB-SLAB VENT SYSTEM".

7. INSTALL METAL ACCESS PLATE ON INTERIOR WALL TO ACCESS EACH VAPOR MONITORING POINT AND PAIRED VACUUM TUBES.

8. INSTALL A U-TUBE MANOMETER TYPE PRESSURE GAUGE ON VERTICAL VENT PIPE RUN, INSIDE INTERIOR WALLS, INLINE WITH BALL VALVE AND COMPRESSION FITTING, WITHIN WALL RECEPTACLE BOX WITH REMOVABLE COVER.

9. USE 90 DEGREE PVC ELBOW TO CONNECT 4" SCH 40 PVC TO PVC CORRUGATED DRAIN TILE.

| REVISION NO. | DESCRIPTION | DATE | BY |
|---|---|---|---|
| | | | |

| | |
|---|---|
| DESIGNED BY TLS | DATE 6/29/17 |
| DRAWN BY RJN | DATE 6/29/17 |
| APPROVED BY KWW | DATE 6/29/17 |

CADFILE G:\ACAD\2505019 – 300 S Barclay st\2017-6-29\BASE FILE BIG.dwg
XREF
LMAN

# FIGURE 27
# BULDINGS 33 AND 34 ACTIVE VAPOR MITIGATION SYSTEM DESIGN
# WAYNE PIGMENT CORPORATION
## 300 SOUTH BARCLAY STREET & 139 EAST OREGON STREET
## MILWAUKEE, WISCONSIN

KEY ENGINEERING GROUP LTD.
735 NORTH WATER STREET, SUITE 510
MILWAUKEE, WI 53202
414.224.8300 (tel) - 414.224.8383 (fax)

KEY PROJECT NUMBER 2505019
SCALE NTS
SHEET NUMBER

Jul 10, 2017 – 2:14pm G:\ACAD\2505019 – 300 S Barclay st\2017-6-29\BASE FILE BIG.dwg

2 NEW WORK PLAN - BASEMENT LEVEL - WEST BUILDINGS
Scale: 1/8" = 1'-0"

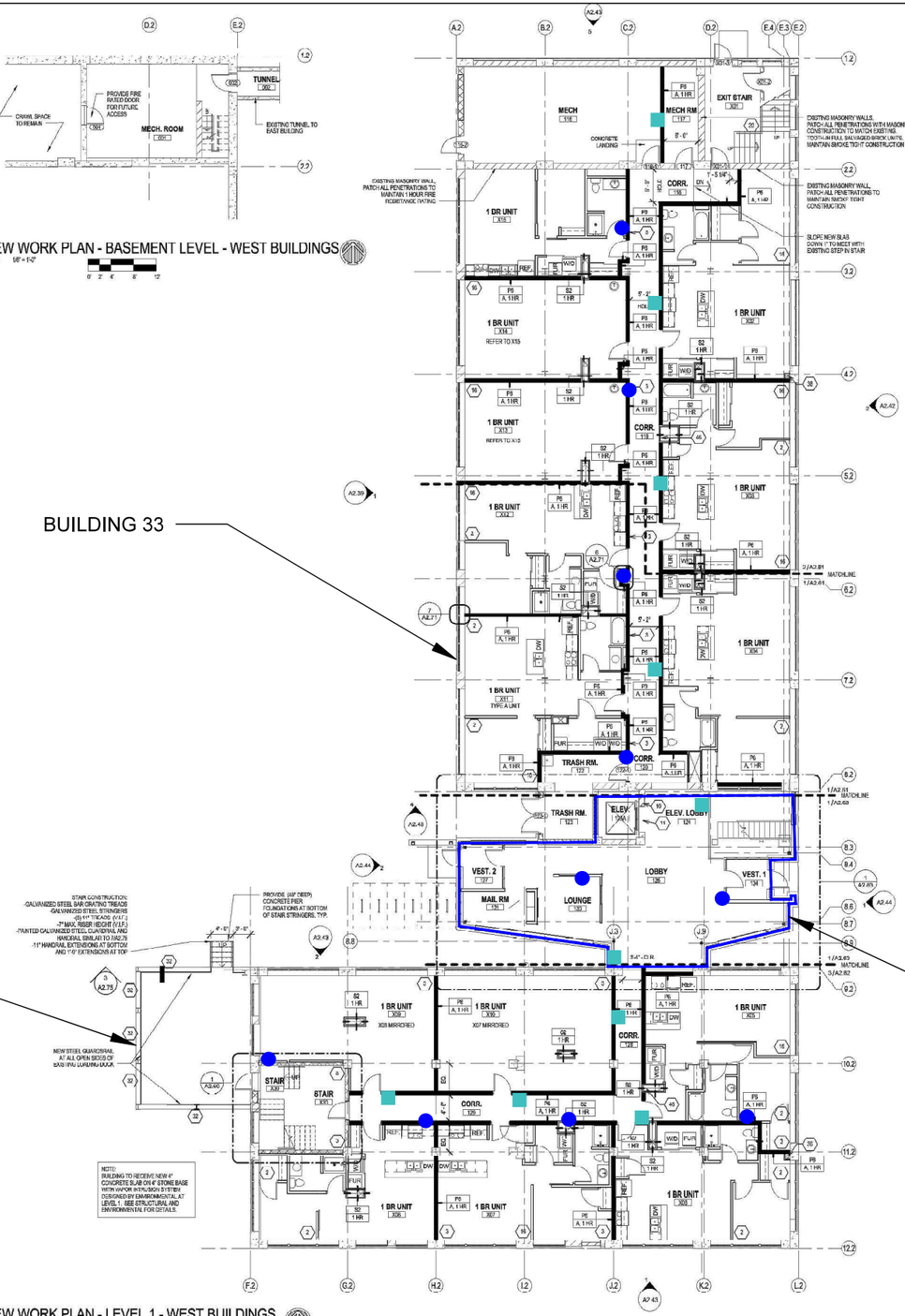


1 NEW WORK PLAN - LEVEL 1 - WEST BUILDINGS
Scale: 1/8" = 1'-0"

## GENERAL FLOOR PLAN NOTES TO CONTRACTOR

1. THIS DRAWING IS FURTHER SUPPORTED BY INFORMATION CONTAINED IN THE SPECIFICATION MANUAL.
2. THE CIVIL, STRUCTURAL, MECHANICAL, ELECTRICAL, PLUMBING, FIRE PROTECTION, AUDIO-VISUAL, AND SECURITY DRAWINGS ARE SUPPLEMENTARY TO THE ARCHITECTURAL DRAWINGS. IT SHALL BE THE RESPONSIBILITY OF THE CONTRACTOR TO COORDINATE THE INFORMATION CONTAINED IN ALL THE DRAWINGS BEFORE THE INSTALLATION OF ALL WORK.
3. DO NOT SCALE DRAWINGS. CONTRACTOR TO VERIFY ALL CONDITIONS AND DIMENSIONS AT THE JOB SITE PRIOR TO COMMENCING CONSTRUCTION.
4. FINISH FLOOR ELEVATIONS ARE TO THE TOP OF THE FINISHED FLOOR MATERIAL UNLESS OTHERWISE NOTED.
5. CONTRACTOR SHALL JOINTLY PROVIDE AND INSTALL ALL STIFFENERS, BRACING, BACKING PLATES, WALL BLOCKING AND SUPPORTING BRACKETS REQUIRED FOR THE INSTALLATION OF CASEWORK, TOILET ACCESSORIES, PARTITIONS, MILLWORK, AND ALL WORK MOUNTED OR SUSPENDED BY ALL TRADES.
6. SEE SHEET A0.02 FOR PARTITION TYPES AND DETAILS.
7. DIMENSIONS AT EXTERIOR WALLS ARE TO STRUCTURAL WALL ONLY AND DO NOT INCLUDE FINISHES.

## NEW WORK LEGEND

- EXISTING TO REMAIN
- MASONRY PARTITION, SEE PARTITION TYPES FOR DETAILS
- RATED CORRIDOR AND UNIT DEMISING PARTITION. SEE PARTITION TYPES FOR DETAILS
- (X) NEW WORK KEY NOTE

## NEW WORK PLAN KEY NOTES

**SEE PROJECT GENERAL CONDITIONS, GENERAL INFORMATION ON SHEET A001 AND SELECTIVE DEMOLITION, CUTTING AND PATCHING SPECIFICATIONS THAT ARE USED IN ASSOCIATION WITH THESE NOTES.**

**NEW WORK PLAN KEY NOTES APPLY TO ALL NEW WORK DRAWINGS AND MAY NOT BE USED ON EVERY SHEET.**

1. PROVIDE EXTRA 1/2" LAYER OF GWB AT ALL FIRE RATED PARTITIONS SURROUNDING BATHTUBS AND SHOWERS
2. ALIGN PARTITION WITH CENTER OF WINDOW MULLION.
3. ALIGN CENTER OF WALL WITH COLUMN GRID LINE. EXISTING
4. WALL PARTITIONS TO 2'-0" A.F.F. FINISH TO FOR FIBER WITH GWB AND PAINT PT-1
5. SHAFT OPENING, COORDINATE WITH MEP AND STRUCTURAL DRAWINGS
6. SEE A0.01 FOR INWALL BLOCKING REQUIREMENTS AT SHOWERS AND BATHTUBS
7. EXISTING MASONRY WALL TO REMAIN EXPOSED AND UNFINISHED
8. MECHANICAL SHAFT. PROVIDE 2 HR RATED SHAFT WALLS SO ALL AROUND THE ACOUSTIC INSULATION. ALIGN FINISH FACES OF GWB ON ADJACENT WALLS. COORDINATE EXACT SIZE AND REQUIREMENTS WITH MECHANICAL DRAWINGS. SHAFT TO TERMINATE ABOVE FIRST FLOOR CEILINGS IN UNITS. COORDINATE SHAFT OPENINGS WITH STRUCTURAL DRAWINGS.
9. ROOM TO BE ABANDONED. ALL EXISTING CONDITIONS/FINISHES TO REMAIN AS IS.
10. INFILL WALL OPENING, ALIGN FINISH FACES OF GWB ON ADJACENT WALL IN ADJACENT ROOM. TYP.
11. INFILL WALL OPENING BETWEEN LEVEL 1 AND LEVEL 2
12. INFILL ALL OPENINGS BETWEEN SKYLIGHT AND PENTHOUSE WALL WITH FIRE RATED CMU. LOCATIONS ARE DIAGRAMMATIC. VERIFY IN FIELD. SEE 1/A1.24 AND 1/A1.71.
13. NEW SKYLIGHT VAN. COORDINATE LOCATION WITH MECHANICAL
14. INFILL EXISTING OPENING WITH CMU MASONRY INFILL SET BACK 1" FROM EXTERIOR FACE OF ADJACENT WALL.
15. NEW BRATED STEEL STAIR ASSEMBLY WITH 42" HIGH GUARDRAILS GR-1 AND ASSOCIATED HANDRAILS, TYP. FOR STAIRS IN BUILDING 11 SEE DETAILS ON SHEET A1.75. FOR STAIRS IN BUILDINGS 33 & 34 SEE DETAILS ON SHEET A2.75.
16. NEW FRONT OF WALL WITH STOOP OVERSHEETS 101 / 5MM
17. 4" DEEP ALUMINUM FRAMED STOREFRONT SYSTEM, 2"X7" TALL, W/ 1/4" TEMPERED CENTER GLAZING. TYP.
18. CONCRETE FILLED METAL PANT STAIR SYSTEM, WITH METAL HANDRAIL.
19. ADDITIONAL LATER 56" KYP. BG.
20. PROVIDE NEW METAL GUARDRAIL GR-2 SURFACE MOUNTED TO OPEN SIDE OF STAIRS AND LANDINGS. EXISTING HANDRAIL TO REMAIN. FOR STAIRS IN BUILDING 11 SEE DETAILS ON SHEET A1.75. FOR STAIRS IN BUILDINGS 33 & 34 SEE DETAILS ON SHEET A2.75.
21. REPAIR & CLEAN EXIST. WINDOW ASSY. REPLACE EXIST. BROKEN GLAZING. PROVIDE INSULATED METAL PANEL ON INSIDE OF WINDOW
22. INFILL OPENING WITH BRICK TO MATCH EXISTING. RECESS BRICK 1" FROM FACE OF EXISTING BRICK WALL. TYP.
23. EXISTING CONCRETE TOPPING TO BE MODIFIED AND SLOPED AS NEEDED TO MATCH ELEVATION AT ELEVATOR LANDING.
24. EXISTING METAL STAIR TO REMAIN. PAINT PT-X. TYP.
25. PAINTED 4 1/2" DIAMETER STEEL PIPE GUARDRAILS TO MATCH EXISTING. TYP. EXTERIOR STAIR TYP. 1 BOTTOM. MIN INFILL TOP OF HANDRAIL 30" ABOVE STAIR TREAD.
26. CONCRETE FLOOR SLAB W/ EPOXY WATER PROOF MEMBRANE, FLASHING, AND WOOD DECK W/ WATER TIGHT BALCONY FLOOR, TYP.
27. REPAIR/PATCH EXIST. CONCRETE ROOF EDGE @ PARAPET CLOSE
28. METAL STUD WALL 42" HIGH WITH WOOD WALL CAP FINISH TO MATCH ADJACENT SEMI BREAKS AND RAILING
29. INSTALL SALVAGED DOUBLE DOOR AND DOOR CLOSER. SCRAPE LOOSE PAINT, CLEAN AND PAINT PT-X
30. PROVIDE 18" DEEP EPOXY COATED WIRE GRID WITH METAL CLOSET POLE TO HANG CLOTHES IN ALL CLOSETS. TYP. AT ADA UNITS PROVIDE 2 6" SECTION METAL CLOSET POLE NOT HIGHER THAN 54".
31. FEATHER NEW CONCRETE AS NEEDED TO MATCH ELEVATION AT ELEVATOR LANDING. SEE FINISH SCHEDULE FOR FLOOR FINISH
32. NEW PAINTED AND PAINTED 42" TALL STEEL GUARDRAIL. SEE DETAIL 9/A2.75.
33. REPAIR EXIST. MASONRY WALL TO MAINTAIN 2 HR. FIRE RATING.
34. NEW 7" BRICK INFILL WITH CMU BACKUP. SEAL BLANKET PROOFING. FURR NEW IP MASONRY WALL
35. NEW STEEL AND WOOD STAIR ASSEMBLY WITH OPEN RISERS AND 30" HIGH HANDRAIL/GUARDRAIL GR-3 ON BOTH SIDES. SEE DETAILS ON SHEET A2.75. MAINTAIN 42" CLEAR AT TRAILING EDGE.
36. NEW AIR DISCHARGE FROM ROOF.
37. ADA COMPLIANT ENCLOSED PLATFORM LIFT W/ACCESSED PIT. SHAFTWAY WALLS TO TERMINATE AT 42" MIN. ABOVE UPPER LOBBY LEVEL WITH EQUAL HEIGHT ENTRY/EXIT DOOR AT UPPER LOBBY LEVEL. DOORS PROVIDED BY LIFT MANUFACTURER.
38. NEW 30 GA. SS CHUTE SLIDE EXTENSION. FIELD MEASURE AND FABRICATE TO FIT AROUND TRASH CHUTE.
39. PATCH ALL PENETRATIONS IN EXISTING STAIR SHAFT & ELEVATOR. WALLS TO MAINTAIN 2 HR FIRE RESISTANCE RATING.
40. PROVIDE NEW METAL AND WOOD GUARDRAIL GR-4 MOUNTED TO BOTH SIDES OF STAIRS AND LANDINGS. SEE ELEVATIONS AND DETAILS FOR GUARDRAIL AND STAIR CONSTRUCTION ON SHEET A1.75.
41. INFILL EXISTING OPENING WITH CMU MASONRY AND BRICK. BRICK INFILL ON EXTERIOR FACE TO BE SET BACK 1" FROM EXTERIOR FACE OF ADJACENT WALL. BRICK TO MATCH ADJACENT.
42. FIRE MANUFACTURED STEEL 30" WIDE 36" RECESSED MEDICINE CABINET WITH MIRRORED DOOR (ALTERNATE). PROVIDE SURFACE MOUNTED ATRATED CH CORRIDOR WALLS.
43. PROVIDE ALLOWANCE FOR MOVEABLE KITCHEN ISLAND.
44. PROVIDE (3) 1" CONDUIT FROM CEILING IN BASEMENT LEVEL TO ROOF AREA FOR FUTURE USE. CAP CONDUIT TO BE WATER TIGHT.
45. EXISTING MASONRY BRICK SILL TO BE RESURFACED FOR NEW WINDOW INSTALLATION. PROVIDE CEMENTITIOUS CASTING/PARGING ON TOP OF SILL TO MATCH EXISTING, TYP. AT ALL WINDOWS.
46. PROVIDE (2) 1" CONDUIT FROM CEILING ON FIRST FLOOR TO ROOF AREA FOR FUTURE USE. CAP CONDUIT TO BE WATER TIGHT.

● EXAMPLE LOCATION OF VERTICAL PVC RISER (ROOF PENETRATION WITH FAN)

■ EXAMPLE LOCATION OF WHERE VACUUM TUBES WOULD BE INSTALLED

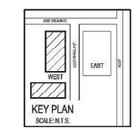


SCALE IN FEET
25' 0 25'

| REVISION NO. | DESCRIPTION | DATE | BY |
|---|---|---|---|
| | | | |

| | |
|---|---|
| DESIGNED BY TLS | DATE 6/29/17 |
| DRAWN BY RJN | DATE 6/29/17 |
| APPROVED BY KWW | DATE 6/29/17 |

CADFILE C:\Users\ctowles\appdata\local\temp\AcPublish_13424\BASE FILE BIG.dwg
XREF
LMAN

# FIGURE 28
# BUILDINGS 33, 34 AND NEW BUILDING VAPOR MITIGATION SYSTEM FLOOR PLANS
## WAYNE PIGMENT CORPORATION
### 300 SOUTH BARCLAY STREET
### MILWAUKEE, WISCONSIN

KEY ENGINEERING GROUP LTD.
735 NORTH WATER STREET, SUITE 510
MILWAUKEE, WI 53202
414.224.8300 (tel) - 414.224.8383 (fax)

KEY PROJECT NUMBER 2505019
SCALE 1" = 50'
SHEET NUMBER

Jun 29, 2017 – 3:57pm C:\Users\ctowles\appdata\local\temp\AcPublish_13424\BASE FILE BIG.dwg

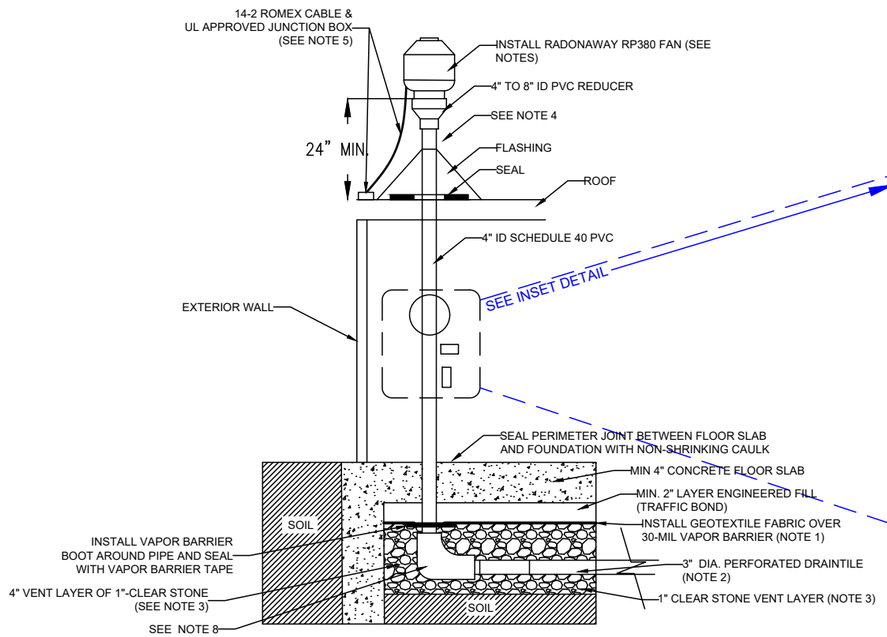


ROOF VENT PIPE AND SLAB PENETRATION DETAIL

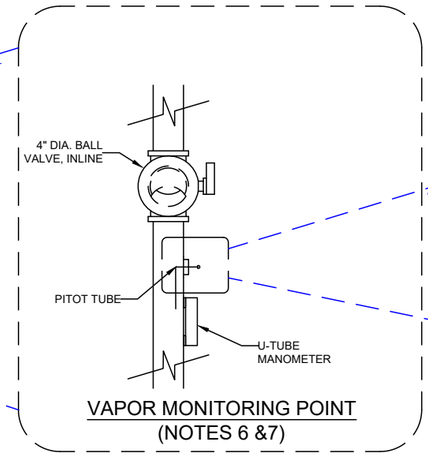


VAPOR MONITORING POINT
(NOTES 6 &7)

SEE PITOT DETAIL

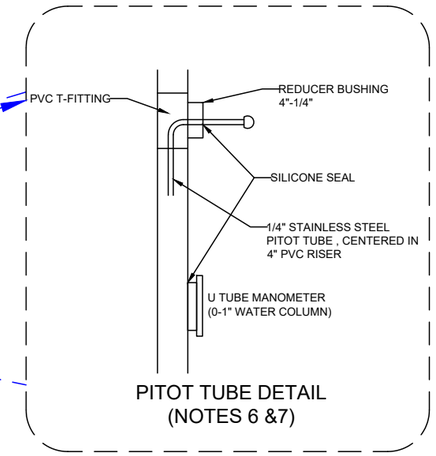


PITOT TUBE DETAIL
(NOTES 6 &7)

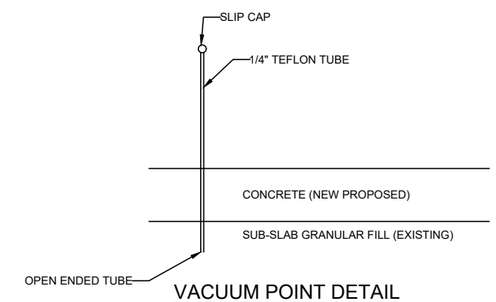


VACUUM POINT DETAIL

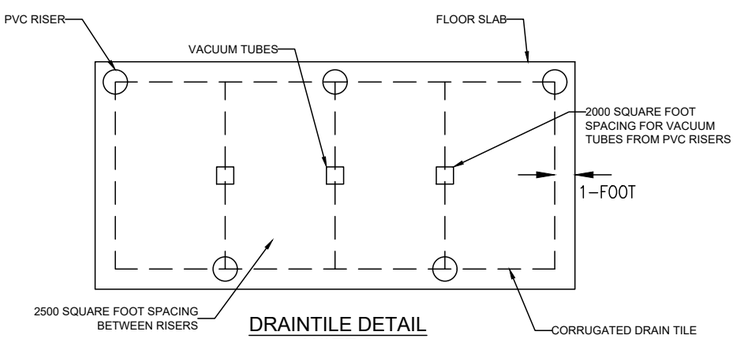


DRAINTILE DETAIL
(NOTE 2)

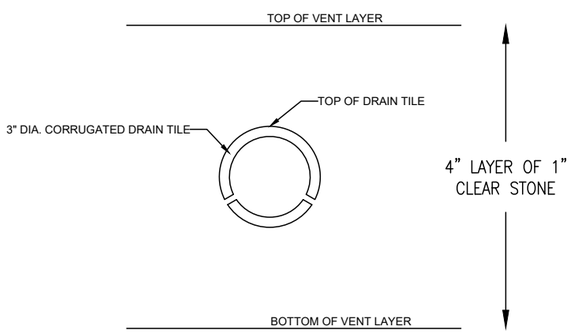


SUB-SLAB PERFORATED VENT PIPE

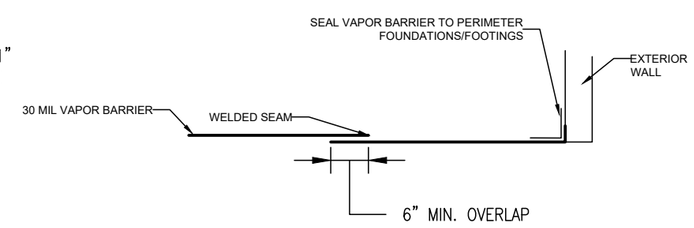


VAPOR BARRIER SEAM

NOTES:

1. FOLLOW MANUFACTURER DIRECTIONS TO INSTALL 30-MIL WELDED-SEAM HDPE VAPOR BARRIER. INSTALL 6 OZ. NON-WOVEN GEOTEXTILE FABRIC ABOVE VAPOR BARRIER TO PROVIDE PROTECTION FOR BARRIER. ALL NEW CONCRETE FLOOR PENETRATIONS SHOULD HAVE A VAPOR BARRIER BOOT AROUND PIPE AND SEAL WITH VAPOR BARRIER TAPE.

2. INSTALL 3" DIAMETER CORRUGATED DRAIN TILE AS SHOWN ON DETAIL. FOR PIPE PERFORATION MAINTAIN UNIFORM PIPE ELEVATION FOR EACH SEPARATE PIPING RUN.

3. METHANE VENT LAYER SHALL BE 1-INCH CLEAR STONE.

4. LOCATE EXTERIOR GAS VENTS MIN 10' FROM AIR INTAKES OR OTHER OPENINGS SUCH AS WINDOWS AND DOORS.

5. INSTALL RADONAWAY RP380 FAN (8" DIAMETER). LICENSED ELECTRICIAN REQUIRED FOR INSTALLATION. EACH FAN SHOULD HAVE ITS OWN CIRCUIT BREAKER. FOR POWER FEED, USE 14-2 ROMEX CABLE TO SINGLE GANG UL LISTED JUNCTION BOX AT ROOF LEVEL. ONE FAN PER 2,500 SQUARE FOOT OF FIRST FLOOR SPACE. NEW BUILDING WILL HAVE 2 FANS.

6. INTERIOR VENT PIPE SECTIONS SHALL BE IDENTIFIED WITH AT LEAST ONE LABEL ON EACH FLOOR LEVEL. LABEL SHALL READ "SUB-SLAB VENT SYSTEM".

7. INSTALL METAL ACCESS PLATE ON INTERIOR WALL TO ACCESS EACH VAPOR MONITORING POINT AND PAIRED VACUUM TUBES.

8. INSTALL A U-TUBE MANOMETER TYPE PRESSURE GAUGE ON VERTICAL VENT PIPE RUN, INSIDE INTERIOR WALLS, INLINE WITH BALL VALVE AND COMPRESSION FITTING, WITHIN WALL RECEPTACLE BOX WITH REMOVABLE COVER.

9. USE 90 DEGREE PVC ELBOW TO CONNECT 4" SCH 40 PVC TO PVC CORRUGATED DRAIN TILE.

| REVISION NO. | DESCRIPTION | DATE | BY |
|---|---|---|---|
| | | | |

| | |
|---|---|
| DESIGNED BY TLS | DATE 6/29/17 |
| DRAWN BY RJN | DATE 6/29/17 |
| APPROVED BY KWW | DATE 6/29/17 |

CADFILE G:\ACAD\2505019 - 300 S Barclay st\2017-6-29\BASE FILE BIG.dwg
XREF
LMAN

# FIGURE 29
# NEW BULDING ACTIVE VAPOR MITIGATION SYSTEM DESIGN
# WAYNE PIGMENT CORPORATION
## 300 SOUTH BARCLAY STREET & 139 EAST OREGON STREET
## MILWAUKEE, WISCONSIN

KEY ENGINEERING GROUP LTD.
735 NORTH WATER STREET, SUITE 510
MILWAUKEE, WI 53202
414.224.8300 (tel) - 414.224.8383 (fax)

KEY PROJECT NUMBER 2505019
SCALE NTS
SHEET NUMBER

Jul 10, 2017 - 2:14pm G:\ACAD\2505019 - 300 S Barclay st\2017-6-29\BASE FILE BIG.dwg

# Tables

Key Engineering Group, Ltd.

**Table 1. Soil Analytical Results**

**Former Wayne Pigment Corp, 300 Barclay Street and 139 Oregon Street, Milwaukee, Wisconsin**

| PARAMETERS | Non-Industrial Direct Contact Residual Contaminant Level | Industrial Direct Contact RCL (mg/kg) | Protection of Groundwater Residual Contaminant Level | Background Threshold Value | Sample ID | | | | | | | | | | | | |
|---|---|---|---|---|---|---|---|---|---|---|---|---|---|---|---|---|---|
| | | | | | B-1 | B-2 | B-3 | B-4 | B-5 | B-6 | B-7 | B-8 | B-9 | B-10 | MW-1 | MW-2 | MW-3 |
| Date Collected | | | | | 3/28/2006 | 3/28/2006 | 3/28/2006 | 3/28/2006 | 3/28/2006 | 3/28/2006 | 3/28/2006 | 3/28/2006 | 3/28/2006 | 3/28/2006 | 10/10/2006 | 10/10/2006 | 10/16/2006 |
| Depth (feet bgs) | | | | | 6-8' | 5-6' | 5-6' | 5-6' | 7-8' | 7-8' | 5-6' | 6-7' | 5-6' | 6-7' | 3-4' | 3-4' | 3-4' |
| Saturated(s)/Unsaturated(u) | | | | | s | s | s | s | s | s | s | s | u | s | u | u | u |
| **VOCs (mg/kg)** | | | | | | | | | | | | | | | | | |
| Benzene | 1.6 | 7.07 | 0.0051 | --- | <0.0016 | <0.0016 | <0.0016 | <0.0016 | <0.180 | <0.017 | <0.890 | **1.5** | <0.033 | <1.8 | <0.0017 | **0.046** | <0.016 |
| Bromobenzene | 342 | 679 | --- | --- | <0.0016 | <0.0016 | <0.0016 | <0.0016 | <0.180 | <0.017 | <0.890 | <0.890 | <0.033 | <1.8 | <0.0017 | <0.017 | <0.011 |
| Bromomethane | 9.6 | 43 | 0.0051 | --- | <0.0016 | <0.0016 | <0.0016 | <0.0016 | <0.180 | <0.017 | <0.890 | <0.890 | **0.070** | <1.8 | <0.0083 | <0.083 | <0.062 |
| n-Butylbenzene | 108 | 108 | --- | --- | <0.0016 | <0.0016 | <0.0016 | <0.0016 | 1.9 | 1.5 | 23 | <0.890 | <0.033 | <1.8 | <0.0017 | <0.017 | <0.012 |
| sec-Butylbenzene | 145 | 145 | --- | --- | <0.0016 | <0.0016 | <0.0016 | <0.0016 | 3.0 | 1.6 | 25 | 37 | 0.940 | <1.8 | <0.0017 | <0.017 | <0.0096 |
| tert-Butylbenzene | 183 | 183 | --- | --- | <0.0016 | <0.0016 | <0.0016 | <0.0016 | 1.2 | 0.290 | 4.0 | 5.3 | <0.033 | <1.8 | <0.0017 | <0.017 | <0.008 |
| Chlorobenzene | 370 | 761 | --- | --- | <0.0016 | <0.0016 | <0.0016 | <0.0016 | <0.180 | 0.036 | <0.890 | <0.890 | <0.033 | <1.8 | <0.0017 | <0.017 | <0.012 |
| Chloroethane | --- | --- | 0.2266 | --- | <0.0016 | <0.0016 | <0.0016 | <0.0016 | <0.180 | <0.017 | <0.890 | <0.890 | <0.033 | <1.8 | <0.0017 | <0.017 | <0.028 |
| Chloroform | 0.454 | 1.98 | 0.0033 | --- | <0.0082 | <0.0082 | <0.0082 | <0.0082 | <0.890 | <0.017 | <4.400 | <4.400 | <0.033 | <9.1 | <0.0083 | **0.32** | <0.020 |
| 1,1-Dichloroethane | 5.06 | 22.2 | 0.4828 | --- | 0.0037J | **0.590** | 0.0028 | 0.043 | <0.180 | <0.017 | <0.890 | <0.890 | <0.033 | <1.8 | <0.0017 | **1.2** | <0.012 |
| 1,2-Dichloroethane | 0.652 | 2.87 | 0.0028 | --- | <0.0016 | <0.0016 | <0.0016 | <0.0016 | <0.180 | <0.017 | <0.890 | <0.890 | <0.033 | <1.8 | <0.0017 | **0.62** | <0.025 |
| 1,1-Dichloroethene | 320 | 1,190 | 0.005 | --- | <0.0015 | **0.010** | <0.0016 | <0.0016 | <0.180 | <0.017 | <0.890 | <0.890 | <0.033 | <1.8 | <0.0017 | <0.017 | <0.036 |
| cis-1,2-Dichloroethene | 156 | 2340 | 0.0412 | --- | <0.0016 | **0.460** | 0.019 | 0.023 | <0.180 | <0.017 | <0.890 | <0.890 | <0.033 | <1.8 | <0.0017 | **0.072** | <0.035 |
| trans-1,2-Dichloroethene | 1,560 | 1850 | 0.0626 | --- | <0.0016 | 0.0036 | <0.0016 | <0.0016 | <0.180 | <0.017 | <0.890 | <0.890 | <0.033 | <1.8 | <0.0017 | <0.017 | <0.033 |
| Di-isopropyl ether | 2,260 | 2260 | --- | --- | NA | NA | NA | NA | NA | NA | NA | NA | NA | NA | NA | NA | NA |
| Ethylbenzene | 8.03 | 35.4 | 1.57 | --- | <0.0016 | <0.0016 | <0.0016 | <0.0016 | 0.95 | <0.017 | **9.4** | **180** | 0.28 | **880** | <0.0017 | <0.017 | <0.011 |
| Hexachlorobutadiene | 1.63 | 7.49 | --- | --- | <0.0016 | <0.0016 | <0.0016 | <0.0016 | <0.180 | <0.017 | <0.890 | <0.890 | <0.033 | <1.8 | <0.0017 | <0.017 | <0.017 |
| Isopropylbenzene | --- | --- | --- | --- | <0.0016 | <0.0016 | <0.0016 | <0.0016 | 11.0 | 2.2 | 140 | 68 | 3.8 | 34 | <0.0017 | <0.017 | < 0.010 |
| p-Isopropyltoluene | 162 | 162 | --- | --- | <0.0016 | <0.0016 | <0.0016 | <0.0016 | 1.6 | 0.16 | 28 | 55 | <0.033 | <1.8 | <0.0017 | <0.017 | <0.084 |
| 2-Butanone (MEK) | 28,400 | 28,400 | 1.6661 | --- | NA | NA | NA | NA | NA | NA | NA | NA | NA | NA | NA | NA | NA |
| Methylene chloride | 61.8 | 1150 | 0.0026 | --- | <0.0082 | <0.0082 | <0.0082 | <0.0082 | <0.180 | <0.017 | <4.400 | <4.400 | <0.033 | <1.8 | <0.0083 | <0.083 | <0.029 |
| Naphthalene | 5.52 | 24.1 | 0.6582 | --- | <0.0082 | **1.9** | <0.0082 | <0.0082 | <0.180 | <0.017 | **13** | **150** | **1.5** | **19** | <0.0083 | <0.083 | <0.019 |
| n-Propylbenzene | --- | --- | --- | --- | <0.0016 | <0.0016 | <0.0016 | <0.0016 | 3.6 | 3.1 | 42 | 90 | <0.033 | 11 | <0.0017 | <0.017 | <0.0096 |
| Styrene | 867 | 867 | 0.22 | --- | <0.0016 | <0.0016 | <0.0016 | <0.0016 | <0.180 | <0.017 | <0.890 | <0.890 | <0.033 | <1.8 | <0.0017 | <0.017 | <0.0097 |
| Tetrachloroethene | 33 | 145 | 0.0045 | --- | <0.0016 | 0.0034 | <0.0016 | <0.0016 | <0.180 | <0.017 | <0.890 | <0.890 | <0.033 | <1.8 | <0.0017 | **1.4** | <0.011 |
| Toluene | 818 | 818 | 1.1072 | --- | <0.0082 | <0.0082 | <0.0082 | <0.0082 | <0.180 | <0.086 | <4.4 | **59** | <0.033 | **12** | <0.0083 | <0.00830 | 0.058 |
| 1,2,3-Trichlorobenzene | 62.6 | 934 | --- | --- | <0.0016 | <0.0083 | <0.0016 | <0.0016 | <0.180 | <0.017 | <0.890 | <0.890 | <0.033 | <1.8 | <0.0017 | <0.00831 | <0.011 |
| 1,2,4-Trichlorobenzene | 24 | 113 | 0.408 | --- | <0.0016 | <0.0084 | <0.0016 | <0.0016 | <0.180 | <0.017 | <0.890 | <0.890 | <0.033 | <1.8 | <0.0017 | <0.00832 | <0.012 |
| 1,1,1-Trichloroethane | 640 | 640 | 0.1402 | --- | 0.0037 | **1.6** | <0.0016 | <0.0016 | <0.180 | <0.017 | <0.890 | <0.890 | <0.033 | <1.8 | <0.0017 | **47** | <0.025 |
| 1,1,2-Trichloroethane | 1.59 | 7.01 | 0.0032 | --- | <0.0016 | <0.0016 | <0.0016 | <0.0016 | <0.180 | 0.13 | <0.890 | <0.890 | <0.033 | <1.8 | <0.0017 | **0.89** | <0.022 |
| Trichloroethene | 1.3 | 8.41 | 0.0036 | --- | <0.0016 | **11.0** | **0.073** | **0.048** | <0.180 | <0.017 | <0.890 | <0.890 | <0.033 | <1.8 | <0.0017 | **180** | <0.016 |
| Trichlorofluoromethane | 1,230 | 1230 | 4.4758 | --- | <0.0016 | <0.0016 | <0.0016 | <0.0016 | <0.180 | <0.017 | <0.890 | <0.890 | <0.033 | <1.8 | <0.0017 | <0.017 | <0.013 |
| 1,2,3-Trimethylbenzene | 182 | 182 | --- | --- | NA | NA | NA | NA | NA | NA | NA | NA | NA | NA | NA | NA | NA |
| 1,2,4-Trimethylbenzene | 219 | 219 | --- | --- | <0.0016 | <0.0016 | <0.0016 | <0.0016 | 40.0 | 1.8 | 180 | 800 | 0.26 | 30 | <0.0017 | 0.093 | <0.0082 |
| 1,3,5-Trimethylbenzene | 182 | 182 | --- | --- | <0.0016 | <0.0016 | <0.0016 | <0.0016 | 0.42 | <0.017 | 48 | 380 | 0.48 | 11 | <0.0017 | <0.017 | <0.010 |
| Trimethylbenzenes | --- | --- | 1.3821 | --- | <0.0016 | <0.0016 | <0.0016 | <0.0016 | **40.42** | **1.8** | **228** | **1,180** | 0.74 | **41** | <0.0017 | 0.093 | <0.010 |
| Vinyl Chloride | 0.067 | 2.08 | 0.0001 | --- | <0.0016 | <0.0016 | <0.0016 | **0.015** | <0.18 | <0.017 | <0.890 | <0.890 | <0.033 | <1.8 | <0.0017 | <0.017 | <0.014 |
| m&p-Xylene | --- | --- | --- | --- | <0.033 | <0.0033 | <0.0033 | <0.0033 | 4.5 | 0.170 | 94 | 1500 | <0.66 | 1,900 | <0.0033 | 0.061 | NA |
| o-Xylene | --- | --- | --- | --- | <0.0016 | <0.0016 | <0.0016 | <0.0016 | 0.5 | <0.017 | 4.3 | 470 | <0.033 | 660 | <0.0017 | 0.10 | NA |
| Xylenes | 260 | 260 | 3.96 | --- | <0.0016 | <0.0016 | <0.0016 | <0.0016 | **5.0** | 0.170 | **98.3** | **1,970** | <0.033 | **2,560** | <0.0033 | 0.161 | <0.014 |

**Table 1. Soil Analytical Results**

**Former Wayne Pigment Corp, 300 Barclay Street and 139 Oregon Street, Milwaukee, Wisconsin**

| PARAMETERS | Non-Industrial Direct Contact Residual Contaminant Level | Industrial Direct Contact RCL (mg/kg) | Protection of Groundwater Residual Contaminant Level | Background Threshold Value | Sample ID | | | | | | | | | | | | |
|---|---|---|---|---|---|---|---|---|---|---|---|---|---|---|---|---|---|
| | | | | | B-1 | B-2 | B-3 | B-4 | B-5 | B-6 | B-7 | B-8 | B-9 | B-10 | MW-1 | MW-2 | MW-3 |
| Date Collected | | | | | 3/28/2006 | 3/28/2006 | 3/28/2006 | 3/28/2006 | 3/28/2006 | 3/28/2006 | 3/28/2006 | 3/28/2006 | 3/28/2006 | 3/28/2006 | 10/10/2006 | 10/10/2006 | 10/16/2006 |
| Depth (feet bgs) | | | | | 6-8' | 5-6' | 5-6' | 5-6' | 7-8' | 7-8' | 5-6' | 6-7' | 5-6' | 6-7' | 3-4' | 3-4' | 3-4' |
| Saturated(s)/Unsaturated(u) | | | | | s | s | s | s | s | s | s | s | u | s | u | u | u |
| **Metals (mg/kg)** | | | | | | | | | | | | | | | | | |
| Arsenic | 0.677 | 3 | 0.584 | 8.0 | **12** | **12** | **760** | <0.074 | **190** | **42** | **2,800** | **14,000** | **2,200** | **1,600** | **11** | **14** | NA |
| Barium | 15,300 | 100,000 | 164.8 | 364 | 91 | 92 | **1,200** | 58 | 200 | 24 | **2,600** | **5,600** | 66 | 170 | **370** | 56 | NA |
| Cadmium | 71 | 985 | 0.752 | 1.0 | **2.70** | **4.20** | **2.60** | **12.0** | **5.30** | 0.15 | **3.2** | **30** | <0.011 | 0.29 | **1.6** | **3.8** | NA |
| Chromium | --- | --- | 360,000 | 44 | 9.10 | 46.0 | 110 | 180 | 4,000 | 11 | 1,200 | 32,000 | 33,000 | 17 | 99.0 | 58 | NA |
| Trivalent Chromium | 100,000 | 100,000 | --- | --- | NA | NA | NA | NA | NA | NA | NA | NA | NA | NA | NA | NA | NA |
| Hexavalent Chromium | 0.301 | 6 | --- | --- | NA | NA | NA | NA | NA | NA | NA | NA | NA | NA | NA | NA | NA |
| Lead | 400 | 800 | 27 | 52 | 47 | **270** | **5,600** | **3,800** | **420** | 12 | **3,700** | **6,100** | **320** | **300** | **400** | **150** | NA |
| Mercury | 3.13 | 3.13 | 0.208 | --- | 0.20 | **0.88** | **0.37** | 0.049 | **0.30** | 0.039 | **0.40** | **0.52** | 0.15 | **0.71** | 0.14 | 0.098 | NA |
| Selenium | 391 | 5,840 | 0.52 | --- | **0.99** | **2.00** | **1.40** | <0.010 | **5.50** | **3.10** | **26** | **12** | <0.021 | <0.021 | <0.46 | <2.3 | NA |
| Silver | 391 | 5,840 | 0.8491 | --- | <0.0037 | <0.0037 | <0.0037 | <0.018 | <0.0037 | <0.0037 | <0.0037 | 0.0093 | 0.39 | <0.0037 | <0.12 | <0.62 | NA |
| **PAHs (mg/kg)** | | | | | | | | | | | | | | | | | |
| Acenaphthene | 3,590 | 45,200 | --- | --- | 0.016 | 19 | 0.073 | 0.014 | 0.094 | 0.045 | 2.2 | 44 | 3.8 | 110 | 0.024 | <0.010 | NA |
| Acenaphthylene | --- | --- | --- | --- | 0.024 | 2.2 | 0.038 | <0.010 | 0.26 | <0.010 | 0.43 | 12 | 0.086 | 17 | <0.10 | 0.030 | NA |
| Anthracene | 17,200 | 100,000 | 196.9492 | --- | 0.031 | 25 | 0.20 | 0.028 | 0.10 | 0.045 | 3.7 | 160 | 3.3 | **220** | 0.047 | 0.026 | NA |
| Benzo(a)anthracene | 1.14 | 20.8 | --- | --- | 0.073 | 44 | 0.67 | 0.063 | 0.16 | 0.13 | 4.3 | 220 | 4.9 | 260 | 0.17 | 0.35 | NA |
| Benzo(a)pyrene | 0.115 | 2.11 | 0.470 | --- | 0.049 | **41** | **0.61** | 0.043 | 0.23 | 0.076 | **3.9** | **190** | **3.5** | **220** | 0.17 | 0.22 | NA |
| Benzo(b)fluoranthene | 1.15 | 21.1 | 0.4793 | --- | 0.16 | **49** | **0.73** | 0.080 | 0.35 | 0.11 | **6.0** | **310** | **3.7** | **370** | 0.24 | **0.80** | NA |
| Benzo(g,h,i)perylene | --- | --- | --- | --- | 0.024 | 24 | 0.18 | 0.020 | 0.052 | 0.039 | 2.5 | 77 | 1.3 | 72 | 0.10 | 0.40 | NA |
| Benzo(k)fluoranthene | 11.5 | 211 | --- | --- | 0.035 | **16** | 0.44 | 0.036 | 0.16 | 0.051 | 6.5 | 340 | 1.5 | 400 | 0.077 | 0.37 | NA |
| Chrysene | 115 | 2,110 | 0.1446 | --- | 0.076 | **42** | **0.56** | 0.057 | 0.12 | 0.11 | **3.7** | **190** | **3.7** | **240** | **0.16** | **0.45** | NA |
| Dibenzo(a,h)anthracene | 0.115 | 2.11 | --- | --- | <0.0093 | <0.93 | 0.02 | <0.0093 | 0.022 | <0.093 | 0.22 | 8.0 | 0.20 | 8.6 | 0.024 | 0.14 | NA |
| Fluoranthene | 2,390 | 30,100 | 88.8778 | --- | 0.13 | 120 | 1.3 | 0.099 | 0.29 | 0.32 | 12 | **590** | 6.6 | **620** | 0.39 | 0.50 | NA |
| Fluorene | 2,390 | 30,100 | 14.8299 | --- | <0.011 | **15** | 0.06 | 0.014 | 0.061 | 0.076 | 3.1 | **66** | 2.9 | **150** | 0.017 | 0.028 | NA |
| Indeno(1,2,3-cd)pyrene | 1.15 | 21.1 | --- | --- | 0.029 | 20 | 0.18 | 0.016 | 0.062 | <0.0099 | 2.0 | 68 | 1.3 | 82 | 0.084 | 0.37 | NA |
| 1-methyl naphthalene | 17.6 | 72.7 | --- | --- | NA | NA | NA | NA | NA | NA | NA | NA | NA | NA | NA | NA | NA |
| 2-methyl naphthalene | 239 | 3,010 | --- | --- | NA | NA | NA | NA | NA | NA | NA | NA | NA | NA | NA | NA | NA |
| Naphthalene | 5.52 | 24.1 | 0.6582 | --- | 0.043 | **29** | 0.12 | 0.053 | **1.1** | **5.4** | **25** | **240** | **2.5** | **83** | 0.041 | 0.044 | NA |
| Phenanthrene | --- | --- | --- | --- | 0.10 | 140 | 0.83 | 0.070 | 0.3 | 0.28 | 15 | 700 | 3.2 | 730 | 0.25 | 0.21 | NA |
| Pyrene | 1,790 | 22,600 | 54.5455 | --- | 0.11 | **120** | 1.2 | 0.090 | 0.45 | 0.34 | 10 | **560** | 6.8 | **540** | 0.39 | 0.49 | NA |
| Total Dectected PAHs | --- | --- | --- | --- | 0.90 | 706.20 | 7.21 | 0.683 | 3.811 | 7.022 | 100.55 | 3775 | 49.286 | 4122.6 | 2.184 | 4.428 | NA |

Bold values exceed protection of groundwater residual contaminant level
Boxed values exceed non-industrial direct contact residual contaminant level
Underlined values exceeded the background threshold value
Metals that exceed the background threshold values are compared to residual contaminant levels
--- - no standard established
B - Compound was found in the blank and sample
F1 - matrix spike and/or matrix spike duplicate recovery is outside acceptance limits
F2 - matrix spike/matrix spike duplicate relative percent difference exceeds control limits

J - Results between laboratory limit of detection and limit of quanitification
bgs - below ground surface
NA - not analyzed or not available
ND - not detected
mg/kg - milligrams per kilogram
PAHs - polynuclear aromatic hydrocarbons
TCLP - toxicity characteristic leaching procedure
VOCs - volatile organic compounds

**Table 1. Soil Analytical Results**

**Former Wayne Pigment Corp, 300 Barclay Street and 139 Oregon Street, Milwaukee, Wisconsin**

| PARAMETERS | Non-Industrial Direct Contact Residual Contaminant Level | Industrial Direct Contact RCL (mg/kg) | Protection of Groundwater Residual Contaminant Level | Background Threshold Value | Sample ID | | | | | | | | | | | |
|---|---|---|---|---|---|---|---|---|---|---|---|---|---|---|---|---|
| | | | | | MW-4 | MW-4 | MW-5 | MW-6 | | MW-7 | | MW-8 | MW-9 | MW-10 | MW-11 | |
| Date Collected | | | | | 10/9/2006 | 10/9/2006 | 10/9/2006 | 10/9/2006 | 10/9/2006 | 10/9/2006 | 10/9/2006 | 10/9/2006 | 10/9/2006 | 10/10/2006 | 10/28/2010 | 10/28/2010 |
| Depth (feet bgs) | | | | | 3-4' | 6-7' | 3-4' | 3-4' | 6-7' | 3-4' | 7-9' | 3-4' | 3-4' | 3-4' | 0-2' | 6-8' |
| Saturated(s)/Unsaturated(u) | | | | | u | s | u | u | s | u | s | u | u | u | u | u |
| **VOCs (mg/kg)** | | | | | | | | | | | | | | | | |
| Benzene | 1.6 | 7.07 | 0.0051 | --- | <0.0017 | <0.017 | <0.0017 | **0.022** | <0.170 | <0.0017 | <0.0017 | <0.0017 | <0.0017 | <0.0017 | **0.170** | **0.092** |
| Bromobenzene | 342 | 679 | --- | --- | <0.0017 | <0.017 | <0.0017 | 0.056 | <0.170 | <0.0017 | <0.0017 | <0.0017 | <0.0017 | <0.0017 | <0.015 | <0.015 |
| Bromomethane | 9.6 | 43 | 0.0051 | --- | <0.0083 | <0.083 | <0.0083 | <0.082 | <0.830 | <0.0083 | <0.0083 | <0.0083 | <0.083 | <0.0083 | <0.077 | <0.080 |
| n-Butylbenzene | 108 | 108 | --- | --- | <0.0017 | 0.37 | <0.0017 | <0.016 | <0.170 | <0.0017 | <0.0017 | <0.0017 | <0.0017 | <0.0017 | < 0.016 | <0.017 |
| sec-Butylbenzene | 145 | 145 | --- | --- | <0.0017 | 0.390 | <0.0017 | 0.490 | 1.5 | <0.0017 | <0.0017 | <0.0017 | <0.0017 | <0.0017 | <0.015 | <0.016 |
| tert-Butylbenzene | 183 | 183 | --- | --- | <0.0017 | 0.088 | <0.0017 | <0.016 | <0.170 | <0.0017 | 0.0065 | <0.0017 | <0.0017 | <0.0017 | <0.013 | <0.014 |
| Chlorobenzene | 370 | 761 | --- | --- | <0.0017 | <0.017 | <0.0017 | <0.016 | <0.170 | <0.0017 | <0.0017 | <0.0017 | <0.0017 | <0.0017 | < 0.016 | <0.017 |
| Chloroethane | --- | --- | 0.2266 | --- | <0.0017 | <0.017 | <0.0017 | <0.016 | <0.170 | <0.0017 | <0.0017 | <0.0017 | <0.0017 | <0.0017 | <0.096 | <0.099 |
| Chloroform | 0.454 | 1.98 | 0.0033 | --- | <0.0083 | <0.083 | <0.0083 | <0.082 | <0.830 | <0.0083 | <0.0083 | <0.0083 | <0.0083 | <0.0083 | <0.021 | <0.022 |
| 1,1-Dichloroethane | 5.06 | 22.2 | 0.4828 | --- | <0.0017 | <0.017 | <0.0017 | <0.016 | <0.170 | <0.0017 | <0.0017 | <0.0017 | <0.0017 | <0.0017 | <0.021 | <0.022 |
| 1,2-Dichloroethane | 0.652 | 2.87 | 0.0028 | --- | <0.0017 | <0.017 | <0.0017 | <0.016 | <0.170 | <0.0017 | <0.0017 | <0.0017 | <0.0017 | <0.0017 | <0.018 | <0.019 |
| 1,1-Dichloroethene | 320 | 1,190 | 0.005 | --- | <0.0017 | <0.017 | <0.0017 | <0.016 | <0.170 | <0.0017 | <0.0017 | <0.0017 | <0.0017 | <0.0017 | <0.026 | <0.027 |
| cis-1,2-Dichloroethene | 156 | 2340 | 0.0412 | --- | <0.0017 | <0.017 | <0.0017 | <0.016 | <0.170 | <0.0017 | <0.0017 | <0.0017 | <0.0017 | <0.0017 | <0.025 | <0.026 |
| trans-1,2-Dichloroethene | 1,560 | 1850 | 0.0626 | --- | <0.0017 | <0.017 | <0.0017 | <0.016 | <0.170 | <0.0017 | <0.0017 | <0.0017 | <0.0017 | <0.0017 | <0.021 | <0.022 |
| Di-isopropyl ether | 2,260 | 2260 | --- | --- | NA | NA | NA | NA | NA | NA | NA | <0.0017 | NA | NA | NA | NA |
| Ethylbenzene | 8.03 | 35.4 | 1.57 | --- | <0.0017 | <0.017 | <0.0017 | **11.0** | **6.8** | <0.0017 | 0.0089 | <0.0017 | <0.0017 | <0.0017 | 0.10 | 0.067 |
| Hexachlorobutadiene | 1.63 | 7.49 | --- | --- | <0.0017 | <0.017 | <0.0017 | <0.016 | <0.170 | <0.0017 | <0.0017 | <0.0017 | <0.0017 | <0.0017 | <0.017 | <0.018 |
| Isopropylbenzene | --- | --- | --- | --- | <0.0017 | 2.3 | <0.0017 | 3.1 | 2.0 | <0.0017 | <0.0017 | <0.0017 | <0.0017 | <0.0017 | 0.032 | <0.017 |
| p-Isopropyltoluene | 162 | 162 | --- | --- | <0.0017 | <0.017 | <0.0017 | 1.4 | 3.8 | <0.0017 | <0.0017 | <0.0017 | <0.0017 | <0.0017 | 0.018 | <0.016 |
| 2-Butanone (MEK) | 28,400 | 28,400 | 1.6661 | --- | NA | NA | NA | NA | NA | NA | NA | NA | NA | NA | <0.210 | <0.220 |
| Methylene chloride | 61.8 | 1150 | 0.0026 | --- | <0.0083 | <0.083 | <0.0083 | **0.11** | <0.830 | <0.0083 | <0.0083 | <0.0083 | <0.0083 | <0.0083 | <0.024 | <0.025 |
| Naphthalene | 5.52 | 24.1 | 0.6582 | --- | <0.0083 | <0.083 | <0.0083 | **3.1** | **3.5** | <0.0083 | <0.0083 | <0.0083 | <0.0083 | <0.0083 | 0.045 | 0.029 |
| n-Propylbenzene | --- | --- | --- | --- | < 0.0017 | 0.51 | <0.0017 | 2.0 | 2.8 | <0.0017 | <0.0017 | <0.0017 | <0.0017 | <0.0017 | 0.027 | <0.016 |
| Styrene | 867 | 867 | 0.22 | --- | <0.0017 | <0.017 | <0.0017 | <0.016 | <0.170 | <0.0017 | <0.0017 | <0.0017 | <0.0017 | <0.0017 | <0.012 | <0.012 |
| Tetrachloroethene | 33 | 145 | 0.0045 | --- | <0.0017 | <0.017 | <0.0017 | <0.016 | <0.170 | <0.0017 | <0.0017 | <0.0017 | <0.0017 | <0.0017 | <0.022 | <0.022 |
| Toluene | 818 | 818 | 1.1072 | --- | <0.0083 | <0.083 | <0.0083 | **5.8** | <0.830 | <0.0083 | <0.0083 | <0.0083 | <0.0083 | <0.0083 | 0.13 | 0.021 |
| 1,2,3-Trichlorobenzene | 62.6 | 934 | --- | --- | <0.0017 | <0.017 | <0.0017 | <0.016 | <0.170 | <0.0017 | <0.0017 | <0.0017 | <0.0017 | <0.0017 | <0.015 | <0.015 |
| 1,2,4-Trichlorobenzene | 24 | 113 | 0.408 | --- | <0.0017 | <0.017 | <0.0017 | <0.016 | <0.170 | <0.0017 | <0.0017 | <0.0017 | <0.0017 | <0.0017 | <0.018 | <0.019 |
| 1,1,1-Trichloroethane | 640 | 640 | 0.1402 | --- | <0.0017 | <0.017 | <0.0017 | <0.016 | <0.170 | <0.0017 | <0.0017 | <0.0017 | <0.0017 | <0.0017 | <0.023 | <0.024 |
| 1,1,2-Trichloroethane | 1.59 | 7.01 | 0.0032 | --- | <0.0017 | <0.017 | <0.0017 | <0.016 | <0.170 | <0.0017 | <0.0017 | <0.0017 | <0.0017 | <0.0017 | <0.027 | <0.028 |
| Trichloroethene | 1.3 | 8.41 | 0.0036 | --- | **0.0066** | <0.017 | **0.065** | <0.016 | <0.170 | <0.0017 | **0.0059** | <0.0017 | **0.12** | <0.0017 | <0.017 | <0.017 |
| Trichlorofluoromethane | 1,230 | 1230 | 4.4758 | --- | <0.0017 | <0.017 | <0.0017 | <0.016 | <0.170 | <0.0017 | <0.0017 | <0.0017 | <0.0017 | <0.0017 | <0.034 | <0.036 |
| 1,2,3-Trimethylbenzene | 182 | 182 | --- | --- | NA | NA | NA | NA | NA | NA | NA | NA | NA | NA | 0.16 | NA |
| 1,2,4-Trimethylbenzene | 219 | 219 | --- | --- | <0.0017 | 1.3 | <0.0017 | 34 | 28 | <0.0017 | 0.0097 | <0.0017 | <0.0017 | <0.0017 | 0.340 | <0.017 |
| 1,3,5-Trimethylbenzene | 182 | 182 | --- | --- | <0.0017 | <0.017 | <0.0017 | 16 | 12.0 | <0.0017 | <0.0017 | <0.0017 | <0.0017 | <0.0017 | 0.20 | <0.017 |
| Trimethylbenzenes | --- | --- | 1.3821 | --- | <0.0017 | 1.3 | <0.0017 | **50** | **40** | <0.0017 | 0.0097 | <0.0017 | <0.0017 | <0.0017 | 0.54 | <0.0017 |
| Vinyl Chloride | 0.067 | 2.08 | 0.0001 | --- | <0.0017 | <0.017 | <0.0017 | <0.016 | <0.170 | <0.0017 | <0.0017 | <0.0017 | <0.0017 | <0.0017 | <0.026 | <0.027 |
| m&p-Xylene | --- | --- | --- | --- | <0.0033 | <0.033 | <0.0033 | 92 | 54 | <0.0033 | 0.043 | <0.0033 | <0.0033 | <0.0033 | NA | NA |
| o-Xylene | --- | --- | --- | --- | <0.0017 | <0.017 | <0.0017 | 64 | 4.1 | <0.0017 | 0.007 | <0.0017 | <0.0017 | <0.0017 | NA | NA |
| Xylenes | 260 | 260 | 3.96 | --- | <0.0033 | <0.033 | <0.0033 | **156** | **58.1** | <0.0033 | 0.050 | <0.0033 | <0.0033 | <0.0033 | 1.4 | 0.16 |

**Table 1. Soil Analytical Results**

**Former Wayne Pigment Corp, 300 Barclay Street and 139 Oregon Street, Milwaukee, Wisconsin**

| PARAMETERS | Non-Industrial Direct Contact Residual Contaminant Level | Industrial Direct Contact RCL (mg/kg) | Protection of Groundwater Residual Contaminant Level | Background Threshold Value | Sample ID | | | | | | | | | | | |
|---|---|---|---|---|---|---|---|---|---|---|---|---|---|---|---|---|
| | | | | | MW-4 | MW-4 | MW-5 | MW-6 | | MW-7 | | MW-8 | MW-9 | MW-10 | MW-11 | |
| Date Collected | | | | | 10/9/2006 | 10/9/2006 | 10/9/2006 | 10/9/2006 | 10/9/2006 | 10/9/2006 | 10/9/2006 | 10/9/2006 | 10/9/2006 | 10/10/2006 | 10/28/2010 | 10/28/2010 |
| Depth (feet bgs) | | | | | 3-4' | 6-7' | 3-4' | 3-4' | 6-7' | 3-4' | 7-9' | 3-4' | 3-4' | 3-4' | 0-2' | 6-8' |
| Saturated(s)/Unsaturated(u) | | | | | u | s | u | u | s | u | s | u | u | u | u | u |
| **Metals (mg/kg)** | | | | | | | | | | | | | | | | |
| Arsenic | 0.677 | 3 | 0.584 | 8.0 | 5.7 | **25** | NA | **1,800** | **340** | 2.9 | 6.0 | NA | NA | NA | **25** | **28** |
| Barium | 15,300 | 100,000 | 164.8 | 364 | 34 | 32 | NA | **590** | 87 | 110 | 39 | NA | NA | NA | 45 | 49 |
| Cadmium | 71 | 985 | 0.752 | 1.0 | 0.80 | **3.30** | NA | **7.0** | **1.50** | **1.60** | 0.82 | NA | NA | NA | <0.20 | <0.20 |
| Chromium | --- | --- | 360,000 | 44 | 170 | 20 | NA | 91 | 11,000 | 31 | 16 | NA | NA | NA | 70 | 15 |
| Trivalent Chromium | 100,000 | 100,000 | --- | --- | NA | NA | NA | NA | NA | NA | NA | NA | NA | NA | 60 | 12 |
| Hexavalent Chromium | 0.301 | 6 | --- | --- | NA | NA | NA | NA | NA | NA | NA | NA | NA | NA | <0.31 | <0.31 |
| Lead | 400 | 800 | 27 | 52 | **68** | 24 | NA | **1,000** | **210** | 13 | 11 | NA | NA | NA | **56** | **94** |
| Mercury | 3.13 | 3.13 | 0.208 | --- | 0.10 | 0.10 | NA | **0.70** | **0.61** | 0.077 | 0.015 | NA | NA | NA | 0.076 | NA |
| Selenium | 391 | 5,840 | 0.52 | --- | <0.46 | <2.3 | NA | <2.3 | <0.46 | <0.46 | <0.46 | NA | NA | NA | **5.90** | **4.90** |
| Silver | 391 | 5,840 | 0.8491 | --- | <0.12 | <0.12 | NA | <0.62 | <0.12 | <0.12 | <0.12 | NA | NA | NA | 0.73 | 0.65 |
| **PAHs (mg/kg)** | | | | | | | | | | | | | | | | |
| Acenaphthene | 3,590 | 45,200 | --- | --- | <0.10 | 0.034 | NA | 0.093 | 0.11 | 0.021 | <0.010 | NA | NA | NA | <0.011 | 0.038 |
| Acenaphthylene | --- | --- | --- | --- | 0.013 | <0.01 | NA | 0.10 | 0.043 | <0.010 | <0.010 | NA | NA | NA | <0.011 | <0.011 |
| Anthracene | 17,200 | 100,000 | 196.9492 | --- | 0.071 | 0.018 | NA | 0.16 | 0.29 | 0.057 | 0.028 | NA | NA | NA | <0.0093 | 0.060 |
| Benzo(a)anthracene | 1.14 | 20.8 | --- | --- | 0.40 | 0.033 | NA | 0.85 | 0.45 | 0.12 | 0.057 | NA | NA | NA | <0.077 | 0.26 |
| Benzo(a)pyrene | 0.115 | 2.11 | 0.470 | --- | **0.56** | 0.021 | NA | **0.90** | 0.42 | 0.098 | 0.037 | NA | NA | NA | <0.074 | 0.23 |
| Benzo(b)fluoranthene | 1.15 | 21.1 | 0.4793 | --- | **0.76** | 0.031 | NA | **1.2** | **0.51** | 0.11 | 0.043 | NA | NA | NA | <0.078 | 0.30 |
| Benzo(g,h,i)perylene | --- | --- | --- | --- | 0.36 | 0.017 | NA | 0.50 | 0.30 | 0.055 | <0.0089 | NA | NA | NA | <0.095 | 0.18 |
| Benzo(k)fluoranthene | 11.5 | 211 | --- | --- | 0.32 | 0.014 | NA | 0.38 | 0.23 | 0.035 | 0.022 | NA | NA | NA | <0.12 | <0.12 |
| Chrysene | 115 | 2,110 | 0.1446 | --- | **0.35** | 0.027 | NA | **1.0** | **0.44** | 0.099 | 0.042 | NA | NA | NA | <0.091 | **0.21** |
| Dibenzo(a,h)anthracene | 0.115 | 2.11 | --- | --- | 0.11 | <0.0093 | NA | 0.20 | 0.089 | <0.0093 | <0.0093 | NA | NA | NA | <0.11 | <0.11 |
| Fluoranthene | 2,390 | 30,100 | 88.8778 | --- | 0.37 | 0.077 | NA | 1.5 | 1.5 | 0.27 | 0.14 | NA | NA | NA | 0.028 | 0.54 |
| Fluorene | 2,390 | 30,100 | 14.8299 | --- | 0.021 | 0.033 | NA | <0.056 | 0.16 | 0.024 | <0.011 | NA | NA | NA | <0.0095 | 0.037 |
| Indeno(1,2,3-cd)pyrene | 1.15 | 21.1 | --- | --- | 0.34 | <0.0099 | NA | 0.53 | 0.32 | 0.055 | <0.0099 | NA | NA | NA | <0.11 | 0.16 |
| 1-methyl naphthalene | 17.6 | 72.7 | --- | --- | NA | NA | NA | NA | NA | NA | NA | NA | NA | NA | NA | NA |
| 2-methyl naphthalene | 239 | 3,010 | --- | --- | NA | NA | NA | NA | NA | NA | NA | NA | NA | NA | NA | NA |
| Naphthalene | 5.52 | 24.1 | 0.6582 | --- | <0.081 | <0.0081 | NA | **4.4** | **2.6** | <0.0081 | <0.0081 | NA | NA | NA | <0.016 | 0.076 |
| Phenanthrene | --- | --- | --- | --- | 0.19 | 0.081 | NA | 1.2 | 1.6 | 0.15 | 0.10 | NA | NA | NA | 0.017 | 0.21 |
| Pyrene | 1,790 | 22,600 | 54.5455 | --- | 0.63 | 0.096 | NA | 1.2 | 0.98 | 0.21 | 0.098 | NA | NA | NA | <0.089 | 0.49 |
| Total Dectected PAHs | --- | --- | --- | --- | 4.495 | 0.482 | NA | 14.213 | 10.042 | 1.304 | 0.567 | NA | NA | NA | 0.045 | 2.791 |

Bold values exceed protection of groundwater residual contaminant level
Boxed values exceed non-industrial direct contact residual contaminant level
Underlined values exceeded the background threshold value
Metals that exceed the background threshold values are compared to residual contaminant levels
--- - no standard established
B - Compound was found in the blank and sample
F1 - matrix spike and/or matrix spike duplicate recovery is outside acceptance limits
F2 - matrix spike/matrix spike duplicate relative percent difference exceeds control limits

J - Results between laboratory limit of detection and limit of quanitification
bgs - below ground surface
NA - not analyzed or not available
ND - not detected
mg/kg - milligrams per kilogram
PAHs - polynuclear aromatic hydrocarbons
TCLP - toxicity characteristic leaching procedure
VOCs - volatile organic compounds

**Table 1. Soil Analytical Results**

**Former Wayne Pigment Corp, 300 Barclay Street and 139 Oregon Street, Milwaukee, Wisconsin**

| PARAMETERS | Non-Industrial Direct Contact Residual Contaminant Level | Industrial Direct Contact RCL (mg/kg) | Protection of Groundwater Residual Contaminant Level | Background Threshold Value | Sample ID | | | | | | | | | | | | |
|---|---|---|---|---|---|---|---|---|---|---|---|---|---|---|---|---|---|
| | | | | | MW-12 | | MW-13 | | MW-14 | | | MW-15 | MW-16 | SB-1 | SB-2 | SB-3 | SB-4 |
| Date Collected | | | | | 10/28/2010 | 10/28/2010 | 10/28/2010 | 10/28/2010 | 10/28/2010 | 10/28/2010 | 10/28/2010 | 10/28/2010 | 10/28/2010 | 10/28/2010 | 10/28/2010 | 10/28/2010 | 10/28/2010 |
| Depth (feet bgs) | | | | | 0-2' | 6-8' | 0-2' | 6-8' | 0-2' | 6-8' | 16-18' | 6-8' | 6-8' | 0-2' | 0-2' | 0-2' | 0-2' |
| Saturated(s)/Unsaturated(u) | | | | | u | u | u | u | u | s | s | s | u | u | u | u | u |
| **VOCs (mg/kg)** | | | | | | | | | | | | | | | | | |
| Benzene | 1.6 | 7.07 | 0.0051 | --- | <0.030 | <0.021 | <0.022 | <0.045 | <0.021 | <0.021 | <0.021 | <0.026 | <0.023 | <0.021 | <0.021 | <0.021 | <0.021 |
| Bromobenzene | 342 | 679 | --- | --- | <0.021 | <0.015 | <0.015 | <0.032 | <0.015 | <0.015 | <0.015 | <0.018 | <0.016 | <0.015 | <0.015 | <0.015 | <0.015 |
| Bromomethane | 9.6 | 43 | 0.0051 | --- | <0.110 | <0.078 | <0.080 | <0.170 | <0.078 | <0.078 | <0.078 | <0.097 | <0.084 | <0.077 | <0.078 | <0.078 | <0.078 |
| n-Butylbenzene | 108 | 108 | --- | --- | <0.024 | <0.017 | 0.086 | 12 | <0.017 | <0.017 | <0.017 | <0.021 | <0.018 | <0.016 | <0.017 | <0.017 | <0.017 |
| sec-Butylbenzene | 145 | 145 | --- | --- | 0.031 | <0.015 | 0.074 | 24 | <0.015 | <0.015 | 0.44 | <0.019 | <0.016 | <0.015 | <0.015 | <0.015 | <0.015 |
| tert-Butylbenzene | 183 | 183 | --- | --- | <0.019 | <0.013 | <0.014 | <0.029 | <0.014 | <0.014 | <0.013 | <0.017 | <0.014 | <0.013 | <0.014 | <0.014 | <0.013 |
| Chlorobenzene | 370 | 761 | --- | --- | <0.023 | <0.016 | <0.017 | <0.036 | <0.017 | <0.017 | <0.016 | <0.021 | <0.018 | <0.016 | <0.017 | <0.017 | <0.016 |
| Chloroethane | --- | --- | 0.2266 | --- | <0.140 | <0.096 | <0.099 | <0.210 | <0.098 | <0.098 | <0.096 | < 0.120 | <0.100 | <0.096 | <0.098 | <0.098 | <0.096 |
| Chloroform | 0.454 | 1.98 | 0.0033 | --- | <0.030 | <0.021 | **0.10** | <0.046 | <0.022 | <0.022 | <0.021 | <0.027 | <0.023 | <0.021 | <0.022 | <0.022 | <0.021 |
| 1,1-Dichloroethane | 5.06 | 22.2 | 0.4828 | --- | <0.030 | <0.021 | <0.022 | <0.046 | <0.021 | <0.021 | <0.021 | <0.026 | <0.023 | <0.021 | <0.021 | <0.021 | <0.021 |
| 1,2-Dichloroethane | 0.652 | 2.87 | 0.0028 | --- | <0.026 | <0.019 | <0.019 | <0.040 | <0.019 | <0.019 | <0.019 | <0.023 | <0.020 | <0.018 | <0.019 | <0.019 | <0.019 |
| 1,1-Dichloroethene | 320 | 1,190 | 0.005 | --- | <0.037 | <0.026 | <0.027 | <0.057 | <0.026 | <0.026 | <0.026 | <0.033 | <0.028 | <0.026 | <0.026 | <0.026 | <0.026 |
| cis-1,2-Dichloroethene | 156 | 2340 | 0.0412 | --- | <0.036 | <0.025 | <0.026 | <0.055 | <0.026 | <0.026 | <0.025 | <0.032 | <0.027 | <0.025 | <0.026 | <0.026 | <0.025 |
| trans-1,2-Dichloroethene | 1,560 | 1850 | 0.0626 | --- | <0.030 | <0.021 | <0.022 | <0.045 | <0.021 | <0.021 | <0.021 | <0.026 | <0.023 | <0.021 | <0.021 | <0.021 | <0.021 |
| Di-isopropyl ether | 2,260 | 2260 | --- | --- | NA | NA | NA | NA | NA | NA | NA | NA | NA | NA | NA | NA | NA |
| Ethylbenzene | 8.03 | 35.4 | 1.57 | --- | 0.180 | 0.14 | 0.820 | **120** | 0.076 | <0.016 | **1.9** | <0.020 | 0.11 | 1.2 | 0.17 | 0.047 | 0.079 |
| Hexachlorobutadiene | 1.63 | 7.49 | --- | --- | <0.024 | <0.017 | <0.018 | <0.037 | <0.017 | <0.017 | <0.017 | <0.022 | <0.019 | <0.017 | <0.017 | <0.017 | <0.017 |
| Isopropylbenzene | --- | --- | --- | --- | 0.290 | 0.066 | 0.17 | 37 | <0.017 | <0.017 | 0.26 | <0.021 | 0.037 | 0.022 | <0.017 | <0.017 | <0.016 |
| p-Isopropyltoluene | 162 | 162 | --- | --- | 0.038 | <0.015 | 0.079 | 24 | <0.016 | <0.016 | 0.097 | <0.019 | 0.026 | <0.015 | <0.016 | <0.016 | <0.015 |
| 2-Butanone (MEK) | 28,400 | 28,400 | 1.6661 | --- | <0.300 | <0.210 | <0.220 | <0.460 | <0.220 | <0.220 | <0.210 | <0.270 | <0.230 | 0.43 | <0.220 | <0.220 | <0.210 |
| Methylene chloride | 61.8 | 1150 | 0.0026 | --- | <0.034 | <0.024 | <0.025 | <0.052 | <0.024 | <0.024 | <0.024 | <0.030 | <0.026 | <0.024 | <0.024 | <0.024 | <0.024 |
| Naphthalene | 5.52 | 24.1 | 0.6582 | --- | 0.35 | <0.014 | 0.10 | **5.3** | 0.24 | <0.014 | 0.14 | 0.10 | 0.25 | 0.037 | 0.03 | 0.14 | **1.4** |
| n-Propylbenzene | --- | --- | --- | --- | 0.089 | <0.016 | 0.082 | 31 | <0.016 | <0.016 | 0.24 | <0.020 | 0.069 | <0.016 | <0.016 | <0.016 | 0.02 |
| Styrene | 867 | 867 | 0.22 | --- | <0.017 | <0.012 | <0.012 | <0.025 | <0.012 | <0.012 | <0.012 | <0.015 | <0.013 | <0.012 | <0.012 | <0.012 | 0.10 |
| Tetrachloroethene | 33 | 145 | 0.0045 | --- | <0.031 | <0.022 | <0.022 | <0.047 | <0.022 | <0.022 | <0.022 | <0.027 | <0.024 | <0.022 | <0.022 | <0.022 | <0.022 |
| Toluene | 818 | 818 | 1.1072 | --- | 0.097 | <0.016 | **1.4** | 0.53 | 0.04 | <0.017 | 0.12 | 0.040 | 0.120 | 0.43 | <0.017 | 0.13 | 0.038 |
| 1,2,3-Trichlorobenzene | 62.6 | 934 | --- | --- | <0.021 | <0.015 | <0.024 | <0.032 | <0.015 | <0.015 | <0.015 | <0.019 | <0.016 | <0.015 | <0.015 | <0.015 | <0.015 |
| 1,2,4-Trichlorobenzene | 24 | 113 | 0.408 | --- | <0.026 | <0.019 | <0.025 | <0.040 | <0.019 | <0.019 | <0.019 | <0.023 | <0.020 | <0.018 | <0.019 | <0.019 | <0.019 |
| 1,1,1-Trichloroethane | 640 | 640 | 0.1402 | --- | <0.033 | <0.023 | <0.024 | <0.050 | <0.023 | <0.023 | <0.023 | 0.063 | <0.025 | <0.023 | <0.023 | <0.023 | <0.023 |
| 1,1,2-Trichloroethane | 1.59 | 7.01 | 0.0032 | --- | <0.038 | <0.027 | <0.028 | <0.058 | <0.027 | <0.027 | <0.027 | <0.034 | <0.029 | <0.027 | <0.027 | <0.027 | <0.027 |
| Trichloroethene | 1.3 | 8.41 | 0.0036 | --- | **0.036** | <0.017 | <0.017 | <0.036 | <0.017 | <0.017 | <0.017 | <0.021 | <0.018 | <0.017 | **1.3** | <0.017 | <0.017 |
| Trichlorofluoromethane | 1,230 | 1230 | 4.4758 | --- | <0.049 | <0.035 | <0.036 | <0.075 | <0.035 | <0.035 | <0.035 | <0.044 | <0.038 | <0.034 | <0.035 | <0.035 | <0.035 |
| 1,2,3-Trimethylbenzene | 182 | 182 | --- | --- | 0.21 | <0.016 | 0.45 | 30 | 0.023 | <0.016 | 0.14 | <0.020 | 0.029 | 0.028 | <0.016 | 0.027 | 0.04 |
| 1,2,4-Trimethylbenzene | 219 | 219 | --- | --- | 0.680 | 0.058 | 0.88 | 170 | 0.067 | <0.017 | 0.85 | 0.058 | 0.091 | 0.094 | 0.053 | 0.065 | 0.10 |
| 1,3,5-Trimethylbenzene | 182 | 182 | --- | --- | 0.50 | 0.026 | 0.76 | 43 | 0.025 | <0.015 | 0.36 | <0.019 | <0.016 | 0.028 | 0.023 | 0.023 | 0.042 |
| Trimethylbenzenes | --- | --- | 1.3821 | --- | **1.18** | 0.08 | **1.64** | **213** | 0.09 | <0.017 | 1.21 | 0.058 | 0.09 | 0.12 | 0.076 | 0.09 | 0.14 |
| Vinyl Chloride | 0.067 | 2.08 | 0.0001 | --- | <0.037 | <0.026 | <0.027 | <0.056 | <0.026 | <0.026 | <0.026 | <0.032 | <0.028 | <0.026 | <0.026 | <0.026 | <0.026 |
| m&p-Xylene | --- | --- | --- | --- | NA | NA | NA | NA | NA | NA | NA | NA | NA | NA | NA | NA | NA |
| o-Xylene | --- | --- | --- | --- | NA | NA | NA | NA | NA | NA | NA | NA | NA | NA | NA | NA | NA |
| Xylenes | 260 | 260 | 3.96 | --- | 3.0 | 0.56 | **13** | **88** | 0.35 | 0.056 | **7.9** | 0.14 | 0.47 | **4.6** | 0.64 | 0.32 | 0.54 |

**Table 1. Soil Analytical Results**

**Former Wayne Pigment Corp, 300 Barclay Street and 139 Oregon Street, Milwaukee, Wisconsin**

| PARAMETERS | Non-Industrial Direct Contact Residual Contaminant Level | Industrial Direct Contact RCL (mg/kg) | Protection of Groundwater Residual Contaminant Level | Background Threshold Value | Sample ID | | | | | | | | | | | | |
|---|---|---|---|---|---|---|---|---|---|---|---|---|---|---|---|---|---|
| | | | | | MW-12 | | MW-13 | | MW-14 | | | MW-15 | MW-16 | SB-1 | SB-2 | SB-3 | SB-4 |
| Date Collected | | | | | 10/28/2010 | 10/28/2010 | 10/28/2010 | 10/28/2010 | 10/28/2010 | 10/28/2010 | 10/28/2010 | 10/28/2010 | 10/28/2010 | 10/28/2010 | 10/28/2010 | 10/28/2010 | 10/28/2010 |
| Depth (feet bgs) | | | | | 0-2' | 6-8' | 0-2' | 6-8' | 0-2' | 6-8' | 16-18' | 6-8' | 6-8' | 0-2' | 0-2' | 0-2' | 0-2' |
| Saturated(s)/Unsaturated(u) | | | | | u | u | u | u | u | s | s | s | u | u | u | u | u |
| **Metals (mg/kg)** | | | | | | | | | | | | | | | | | |
| Arsenic | 0.677 | 3 | 0.584 | 8.0 | **340** | **14** | **1,700** | **780** | **2,500** | **61** | **18** | **17** | 6.2 | **40** | **590** | **2,700** | **1,500** |
| Barium | 15,300 | 100,000 | 164.8 | 364 | **1,800** | 54 | **3,000** | **370** | **430** | 61 | 60 | 120 | 89 | 54 | **590** | **680** | **570** |
| Cadmium | 71 | 985 | 0.752 | 1.0 | **10** | 0.84 | <8.0 | <4.0 | <8.0 | <0.20 | <0.20 | 0.65 | 0.18 | <0.20 | <4.0 | <8.0 | <8.0 |
| Chromium | --- | --- | 360,000 | 44 | 590 | 12 | 540 | 20 | 290 | 33 | 3,500 | 30 | 14 | 1,400 | NA | 370 | 510 |
| Trivalent Chromium | 100,000 | 100,000 | --- | --- | 400 | 10 | 380 | 16 | 200 | 22 | 2,900 | 21 | 10 | 1,300 | 230 | 290 | 470 |
| Hexavalent Chromium | 0.301 | 6 | --- | --- | 73 | <0.31 | 4.30 | <0.31 | 32.0 | <0.31 | <0.31 | <0.31 | <0.31 | 5.40 | 16 | <0.31 | <0.31 |
| Lead | 400 | 800 | 27 | 52 | **3,600** | **490** | **6,200** | **180** | **1,600** | 9.1 | 36 | **240** | **210** | **170** | **1,100** | **1,400** | **1,600** |
| Mercury | 3.13 | 3.13 | 0.208 | --- | **0.49** | **1.1** | **2.30** | **0.51** | **1.10** | 0.026 | 0.073 | **2.0** | **1.40** | 0.16 | **0.66** | **0.37** | **0.40** |
| Selenium | 391 | 5,840 | 0.52 | --- | **8.90** | **6.8** | **9.20** | **4.70** | **8.10** | **1.30** | <0.32 | **9.9** | **3.20** | **1.20** | **9.20** | **12** | **4.90** |
| Silver | 391 | 5,840 | 0.8491 | --- | **1.50** | **4.3** | **1.10** | 0.54 | **0.89** | 0.73 | 0.33 | **1.30** | 0.32 | 0.54 | **1.20** | **1.40** | 0.71 |
| **PAHs (mg/kg)** | | | | | | | | | | | | | | | | | |
| Acenaphthene | 3,590 | 45,200 | --- | --- | 1.4 | 0.23 | <0.11 | 0.096 | 0.82 | <0.011 | <0.011 | 0.089 | 0.061 | <0.056 | 0.52 | 0.27 | 3.8 |
| Acenaphthylene | --- | --- | --- | --- | 0.35 | 0.095 | <0.11 | 0.025 | 0.35 | <0.011 | <0.011 | 0.029 | <0.011 | <0.054 | 0.3 | 0.19 | <0.22 |
| Anthracene | 17,200 | 100,000 | 196.9492 | --- | 3.1 | 0.56 | 0.18 | 0.16 | 3 | <0.0093 | <0.0093 | 0.14 | 0.15 | 0.16 | 1.2 | 1.0 | 6.6 |
| Benzo(a)anthracene | 1.14 | 20.8 | --- | --- | 9.5 | 1.3 | 0.59 | 0.35 | 8.4 | <0.0077 | 0.023 | 0.43 | 0.29 | 0.64 | 3.5 | 3.3 | 20 |
| Benzo(a)pyrene | 0.115 | 2.11 | 0.470 | --- | **12** | **1.1** | **0.51** | 0.30 | **10** | <0.0074 | 0.019 | 0.32 | 0.24 | **0.58** | **1.4** | **3.2** | **27** |
| Benzo(b)fluoranthene | 1.15 | 21.1 | 0.4793 | --- | **20** | **2.0** | **1.7** | **0.52** | **16** | <0.0078 | 0.025 | 0.37 | 0.26 | **0.89** | **2.9** | **5.2** | **44** |
| Benzo(g,h,i)perylene | --- | --- | --- | --- | 3.1 | 0.23 | 0.30 | <0.095 | 2.9 | <0.0095 | <0.0095 | 0.23 | 0.066 | 0.17 | 0.46 | 0.84 | 6.4 |
| Benzo(k)fluoranthene | 11.5 | 211 | --- | --- | 5.5 | 0.30 | 0.68 | 0.22 | 5.4 | <0.012 | 0.016 | 0.20 | 0.15 | 0.46 | 0.73 | 2.0 | 15 |
| Chrysene | 115 | 2,110 | 0.1446 | --- | **8.0** | **0.85** | **0.69** | **0.27** | **7.1** | <0.0091 | 0.019 | **0.43** | **0.24** | **0.52** | **2.6** | **3.2** | **18** |
| Dibenzo(a,h)anthracene | 0.115 | 2.11 | --- | --- | 1.2 | <0.11 | <0.22 | <0.11 | 0.92 | <0.011 | <0.011 | <0.11 | 0.046 | <0.11 | <0.22 | 0.32 | 2.3 |
| Fluoranthene | 2,390 | 30,100 | 88.8778 | --- | 15 | 2.2 | 1.0 | 0.87 | 14 | <0.0079 | 0.044 | 1.3 | 0.75 | 1.6 | 11 | 6.4 | 27 |
| Fluorene | 2,390 | 30,100 | 14.8299 | --- | 1.4 | 0.30 | <0.095 | 0.14 | 1.0 | <0.0095 | <0.0095 | 0.079 | 0.058 | <0.048 | 0.67 | 0.32 | 3.8 |
| Indeno(1,2,3-cd)pyrene | 1.15 | 21.1 | --- | --- | 3.5 | 0.23 | <0.22 | <0.11 | 2.9 | <0.011 | <0.011 | 0.20 | 0.075 | 0.17 | 0.49 | 0.89 | 7.4 |
| 1-methyl naphthalene | 17.6 | 72.7 | --- | --- | NA | NA | NA | NA | NA | NA | NA | NA | NA | NA | NA | NA | NA |
| 2-methyl naphthalene | 239 | 3,010 | --- | --- | NA | NA | NA | NA | NA | NA | NA | NA | NA | NA | NA | NA | NA |
| Naphthalene | 5.52 | 24.1 | 0.6582 | --- | **0.95** | 0.14 | 0.45 | **2.0** | 0.44 | <0.016 | 0.026 | 0.42 | 0.091 | <0.080 | **0.87** | 0.62 | **2.3** |
| Phenanthrene | --- | --- | --- | --- | 10 | 1.5 | 0.68 | 0.82 | 8.9 | <0.0073 | 0.025 | 1.1 | 0.62 | 0.64 | 7.1 | 4.5 | 21 |
| Pyrene | 1,790 | 22,600 | 54.5455 | --- | 14 | 1.9 | 0.86 | 1.2 | 13 | <0.0089 | 0.035 | 0.95 | 0.53 | 0.91 | 6.4 | 6.2 | 36 |
| Total Dectected PAHs | --- | --- | --- | --- | 109 | 12.935 | 7.64 | 6.971 | 95.13 | NA | 0.232 | 6.287 | 3.627 | 6.74 | 40.14 | 38.45 | 240.6 |

Bold values exceed protection of groundwater residual contaminant level
Boxed values exceed non-industrial direct contact residual contaminant level
Underlined values exceeded the background threshold value
Metals that exceed the background threshold values are compared to residual contaminant levels
--- - no standard established
B - Compound was found in the blank and sample
F1 - matrix spike and/or matrix spike duplicate recovery is outside acceptance limits
F2 - matrix spike/matrix spike duplicate relative percent difference exceeds control limits

J - Results between laboratory limit of detection and limit of quanitification
bgs - below ground surface
NA - not analyzed or not available
ND - not detected
mg/kg - milligrams per kilogram
PAHs - polynuclear aromatic hydrocarbons
TCLP - toxicity characteristic leaching procedure
VOCs - volatile organic compounds

**Table 1. Soil Analytical Results**

**Former Wayne Pigment Corp, 300 Barclay Street and 139 Oregon Street, Milwaukee, Wisconsin**

| PARAMETERS | Non-Industrial Direct Contact Residual Contaminant Level | Industrial Direct Contact RCL (mg/kg) | Protection of Groundwater Residual Contaminant Level | Background Threshold Value | Sample ID | | | | | | | | | | | |
|---|---|---|---|---|---|---|---|---|---|---|---|---|---|---|---|---|
| | | | | | SB-5 | GP-1 | GP-2 | | SB-17 | | SB-18 | | SB-19 | | SB-20 | |
| Date Collected | | | | | 10/28/2010 | 8/27/2015 | 8/27/2015 | | 12/3/2015 | | 12/3/2015 | | 12/3/2015 | | 12/3/2015 | |
| Depth (feet bgs) | | | | | 0-2' | 3-5 | 2-4 | 6-8 | 2-4 | 12-14 | 2-4 | 10-12 | 2-4 | 8-10 | 2-4 | 8-10 |
| Saturated(s)/Unsaturated(u) | | | | | u | u | u | s | u | s | u | s | u | s | u | s |
| **VOCs (mg/kg)** | | | | | | | | | | | | | | | | |
| Benzene | 1.6 | 7.07 | 0.0051 | --- | <0.021 | <0.025 | **0.11** | <0.025 | <0.025 | <0.025 | **0.053J** | <0.025 | <0.025 | <0.025 | <0.025 | <0.025 |
| Bromobenzene | 342 | 679 | --- | --- | <0.015 | <0.025 | <0.037 | <0.025 | <0.025 | <0.025 | <0.026 | <0.025 | <0.025 | <0.025 | <0.025 | <0.025 |
| Bromomethane | 9.6 | 43 | 0.0051 | --- | <0.078 | <0.070 | <0.10 | <0.070 | <0.070 | <0.070 | <0.071 | <0.070 | <0.070 | <0.070 | <0.070 | <0.070 |
| n-Butylbenzene | 108 | 108 | --- | --- | <0.017 | <0.025 | 0.051J | <0.025 | <0.025 | <0.025 | <0.026 | <0.025 | <0.025 | <0.025 | <0.025 | <0.025 |
| sec-Butylbenzene | 145 | 145 | --- | --- | <0.015 | <0.025 | <0.037 | <0.025 | <0.025 | <0.025 | <0.026 | <0.025 | <0.025 | <0.025 | <0.025 | <0.025 |
| tert-Butylbenzene | 183 | 183 | --- | --- | <0.014 | <0.025 | <0.037 | <0.025 | <0.025 | <0.025 | <0.026 | <0.025 | <0.025 | <0.025 | <0.025 | <0.025 |
| Chlorobenzene | 370 | 761 | --- | --- | <0.017 | <0.025 | <0.037 | <0.025 | <0.025 | <0.025 | <0.026 | <0.025 | <0.025 | <0.025 | <0.025 | <0.025 |
| Chloroethane | --- | --- | 0.2266 | --- | <0.098 | <0.067 | <0.10 | <0.067 | <0.067 | <0.067 | <0.068 | <0.067 | <0.067 | <0.067 | <0.067 | <0.067 |
| Chloroform | 0.454 | 1.98 | 0.0033 | --- | <0.022 | <0.046 | <0.069 | <0.046 | <0.046 | <0.046 | <0.047 | <0.046 | <0.046 | <0.046 | <0.046 | <0.046 |
| 1,1-Dichloroethane | 5.06 | 22.2 | 0.4828 | --- | <0.021 | <0.025 | <0.037 | <0.025 | <0.025 | <0.025 | <0.026 | <0.025 | <0.025 | <0.025 | <0.025 | <0.025 |
| 1,2-Dichloroethane | 0.652 | 2.87 | 0.0028 | --- | <0.019 | <0.025 | <0.037 | <0.025 | <0.025 | <0.025 | <0.026 | <0.025 | <0.025 | <0.025 | <0.025 | <0.025 |
| 1,1-Dichloroethene | 320 | 1,190 | 0.005 | --- | <0.026 | <0.025 | <0.037 | <0.025 | <0.025 | <0.025 | <0.026 | <0.025 | <0.025 | <0.025 | <0.025 | <0.025 |
| cis-1,2-Dichloroethene | 156 | 2340 | 0.0412 | --- | <0.026 | <0.025 | <0.037 | <0.025 | <0.025 | <0.025 | <0.026 | <0.025 | <0.025 | <0.025 | <0.025 | <0.025 |
| trans-1,2-Dichloroethene | 1,560 | 1850 | 0.0626 | --- | <0.021 | <0.025 | <0.037 | <0.025 | <0.025 | <0.025 | <0.026 | <0.025 | <0.025 | <0.025 | <0.025 | <0.025 |
| Di-isopropyl ether | 2,260 | 2260 | --- | --- | NA | <0.025 | <0.037 | <0.025 | <0.025 | <0.025 | <0.026 | <0.025 | <0.025 | <0.025 | <0.025 | <0.025 |
| Ethylbenzene | 8.03 | 35.4 | 1.57 | --- | <0.016 | <0.025 | 0.47 | 0.051J | <0.025 | 1.3 | 0.057J | <0.025 | <0.025 | <0.025 | <0.025 | <0.025 |
| Hexachlorobutadiene | 1.63 | 7.49 | --- | --- | <0.017 | <0.025 | <0.037 | <0.025 | <0.025 | <0.025 | <0.026 | <0.025 | <0.025 | <0.025 | <0.025 | <0.025 |
| Isopropylbenzene | --- | --- | --- | --- | <0.017 | <0.025 | 0.087J | <0.025 | <0.025 | 0.12 | <0.026 | <0.025 | <0.025 | <0.025 | <0.025 | <0.025 |
| p-Isopropyltoluene | 162 | 162 | --- | --- | <0.016 | <0.025 | <0.037 | <0.025 | <0.025 | <0.025 | <0.026 | <0.025 | <0.025 | <0.025 | <0.025 | <0.025 |
| 2-Butanone (MEK) | 28,400 | 28,400 | 1.6661 | --- | <0.220 | NA | NA | NA | NA | NA | NA | NA | NA | NA | NA | NA |
| Methylene chloride | 61.8 | 1150 | 0.0026 | --- | <0.024 | <0.025 | <0.037 | <0.025 | <0.025 | <0.025 | <0.026 | <0.025 | **0.032J** | <0.025 | <0.025 | <0.025 |
| Naphthalene | 5.52 | 24.1 | 0.6582 | --- | 0.04 | <0.040 | **0.74** | <0.040 | 0.15J | <0.040 | 0.28J | <0.040 | <0.040 | <0.040 | 0.058J | <0.040 |
| n-Propylbenzene | --- | --- | --- | --- | <0.016 | <0.025 | 0.11 | <0.025 | <0.025 | <0.025 | 0.033J | <0.025 | <0.025 | <0.025 | <0.025 | <0.025 |
| Styrene | 867 | 867 | 0.22 | --- | <0.012 | <0.025 | <0.037 | <0.025 | <0.025 | <0.025 | <0.026 | <0.025 | <0.025 | <0.025 | <0.025 | <0.025 |
| Tetrachloroethene | 33 | 145 | 0.0045 | --- | <0.022 | <0.025 | <0.037 | <0.025 | **3.7** | <0.025 | <0.026 | <0.025 | <0.025 | <0.025 | <0.025 | <0.025 |
| Toluene | 818 | 818 | 1.1072 | --- | <0.017 | <0.025 | **4.0** | **3.1** | 0.061J | 0.23 | 0.52 | <0.025 | 0.037J | <0.025 | 1.1 | <0.025 |
| 1,2,3-Trichlorobenzene | 62.6 | 934 | --- | --- | <0.015 | <0.025 | <0.037 | <0.025 | <0.025 | <0.025 | <0.026 | <0.025 | <0.025 | <0.025 | <0.025 | <0.025 |
| 1,2,4-Trichlorobenzene | 24 | 113 | 0.408 | --- | <0.019 | <0.048 | <0.071 | <0.048 | <0.048 | <0.048 | <0.049 | <0.048 | <0.048 | <0.048 | <0.048 | <0.048 |
| 1,1,1-Trichloroethane | 640 | 640 | 0.1402 | --- | <0.023 | <0.025 | <0.037 | <0.025 | **0.98** | <0.025 | <0.026 | <0.025 | <0.025 | <0.025 | <0.025 | <0.025 |
| 1,1,2-Trichloroethane | 1.59 | 7.01 | 0.0032 | --- | <0.027 | <0.025 | <0.037 | <0.025 | <0.025 | <0.025 | <0.026 | <0.025 | <0.025 | <0.025 | <0.025 | <0.025 |
| Trichloroethene | 1.3 | 8.41 | 0.0036 | --- | <0.017 | <0.025 | <0.037 | **0.31** | **4.9** | <0.025 | **1.2** | **0.031J** | **6.9** | **0.056J** | **0.19** | **0.037J** |
| Trichlorofluoromethane | 1,230 | 1230 | 4.4758 | --- | <0.035 | <0.025 | <0.037 | <0.025 | <0.025 | <0.025 | <0.026 | <0.025 | <0.025 | <0.025 | <0.025 | <0.025 |
| 1,2,3-Trimethylbenzene | 182 | 182 | --- | --- | <0.016 | NA | NA | NA | NA | NA | NA | NA | NA | NA | NA | NA |
| 1,2,4-Trimethylbenzene | 219 | 219 | --- | --- | <0.017 | <0.025 | 0.40 | <0.025 | 0.078 | 0.12 | 0.18 | <0.025 | 0.080 | <0.025 | 0.14 | <0.025 |
| 1,3,5-Trimethylbenzene | 182 | 182 | --- | --- | <0.015 | <0.025 | 0.10J | <0.025 | 0.052J | 0.069J | 0.091 | <0.025 | <0.025 | <0.025 | 0.097 | <0.025 |
| Trimethylbenzenes | --- | --- | 1.3821 | --- | <0.017 | <0.025 | 0.50J | <0.025 | 0.130J | 0.189J | 0.271 | <0.025 | 0.08 | <0.050 | 0.237 | <0.050 |
| Vinyl Chloride | 0.067 | 2.08 | 0.0001 | --- | <0.026 | <0.025 | <0.037 | <0.025 | <0.025 | <0.025 | <0.026 | <0.025 | <0.025 | <0.025 | <0.025 | <0.025 |
| m&p-Xylene | --- | --- | --- | --- | NA | <0.050 | 2.4 | 0.21J | <0.050 | 5.0 | 0.31 | <0.050 | <0.050 | <0.050 | 0.18 | <0.050 |
| o-Xylene | --- | --- | --- | --- | NA | <0.025 | 1.2 | 0.078J | 0.045J | 0.66 | 0.22 | <0.025 | <0.025 | <0.025 | 0.083 | <0.025 |
| Xylenes | 260 | 260 | 3.96 | --- | <0.023 | <0.025 | 3.6 | 0.288J | 0.045J | **5.66** | 0.53 | <0.025 | <0.025 | <0.025 | 0.263 | <0.025 |

**Table 1. Soil Analytical Results**

**Former Wayne Pigment Corp, 300 Barclay Street and 139 Oregon Street, Milwaukee, Wisconsin**

| PARAMETERS | Non-Industrial Direct Contact Residual Contaminant Level | Industrial Direct Contact RCL (mg/kg) | Protection of Groundwater Residual Contaminant Level | Background Threshold Value | Sample ID | | | | | | | | | | | |
|---|---|---|---|---|---|---|---|---|---|---|---|---|---|---|---|---|
| | | | | | SB-5 | GP-1 | GP-2 | | SB-17 | | SB-18 | | SB-19 | | SB-20 | |
| Date Collected | | | | | 10/28/2010 | 8/27/2015 | 8/27/2015 | | 12/3/2015 | | 12/3/2015 | | 12/3/2015 | | 12/3/2015 | |
| Depth (feet bgs) | | | | | 0-2' | 3-5 | 2-4 | 6-8 | 2-4 | 12-14 | 2-4 | 10-12 | 2-4 | 8-10 | 2-4 | 8-10 |
| Saturated(s)/Unsaturated(u) | | | | | u | u | u | s | u | s | u | s | u | s | u | s |
| **Metals (mg/kg)** | | | | | | | | | | | | | | | | |
| Arsenic | 0.677 | 3 | 0.584 | 8.0 | 4.4 | NA | NA | NA | **8.1** | **8.5** | NA | NA | **34.5** | 4.6 | NA | NA |
| Barium | 15,300 | 100,000 | 164.8 | 364 | 12 | NA | NA | NA | 38.5 | NA | **520** | NA | **1370** | NA | NA | NA |
| Cadmium | 71 | 985 | 0.752 | 1.0 | 0.64 | NA | NA | NA | NA | NA | NA | NA | NA | NA | NA | NA |
| Chromium | --- | --- | 360,000 | 44 | 92 | NA | NA | NA | 12.0 | 13.0 | NA | NA | 145 | 10.8 | NA | 9.5 |
| Trivalent Chromium | 100,000 | 100,000 | --- | --- | 83 | NA | NA | NA | 12.0 | 10.9 | NA | NA | 135.7 | 10.8 | NA | NA |
| Hexavalent Chromium | 0.301 | 6 | --- | --- | <0.31 | NA | NA | NA | <1.92 | 2.12 | NA | NA | 9.29 | <1.92 | NA | NA |
| Lead | 400 | 800 | 27 | 52 | <4.5 | NA | NA | NA | **99.1** | NA | **686** | NA | NA | NA | NA | NA |
| Mercury | 3.13 | 3.13 | 0.208 | --- | <0.0053 | NA | NA | NA | NA | NA | NA | NA | NA | NA | NA | NA |
| Selenium | 391 | 5,840 | 0.52 | --- | 0.40 | NA | NA | NA | NA | NA | NA | NA | NA | NA | NA | NA |
| Silver | 391 | 5,840 | 0.8491 | --- | <0.16 | NA | NA | NA | NA | NA | NA | NA | NA | NA | NA | NA |
| **PAHs (mg/kg)** | | | | | | | | | | | | | | | | |
| Acenaphthene | 3,590 | 45,200 | --- | --- | <0.011 | <0.0091 | 0.030J | <0.030 | 0.076 | NA | 0.044 | NA | 0.028 | NA | <0.0099 | NA |
| Acenaphthylene | --- | --- | --- | --- | <0.011 | <0.0081 | 0.030J | 0.085 | <0.033 | NA | 0.025J | NA | 0.020J | NA | 0.057 | NA |
| Anthracene | 17,200 | 100,000 | 196.9492 | --- | <0.0093 | <0.0094 | 0.14 | 0.17 | 0.36 | NA | 0.16 | NA | 0.095 | NA | 0.10 | NA |
| Benzo(a)anthracene | 1.14 | 20.8 | --- | --- | <0.0077 | <0.0063 | 0.43 | 0.72 | 0.75 | NA | 0.29 | NA | 0.22 | NA | 0.21 | NA |
| Benzo(a)pyrene | 0.115 | 2.11 | 0.470 | --- | <0.0074 | <0.0065 | 0.42 | **0.83** | **0.69** | NA | 0.27 | NA | 0.28 | NA | 0.21 | NA |
| Benzo(b)fluoranthene | 1.15 | 21.1 | 0.4793 | --- | <0.0078 | <0.0091 | 0.41 | **0.85** | **0.66** | NA | 0.27 | NA | 0.22 | NA | 0.24 | NA |
| Benzo(g,h,i)perylene | --- | --- | --- | --- | <0.0095 | <0.0069 | 0.17 | 0.40 | 0.24 | NA | 0.10 | NA | 0.12 | NA | 0.11 | NA |
| Benzo(k)fluoranthene | 11.5 | 211 | --- | --- | <0.012 | <0.010 | 0.49 | 0.80 | 0.74 | NA | 0.24 | NA | 0.24 | NA | 0.31 | NA |
| Chrysene | 115 | 2,110 | 0.1446 | --- | <0.0091 | <0.0084 | **0.51** | **0.87** | **0.82** | NA | **0.33** | NA | **0.27** | NA | **0.25** | NA |
| Dibenzo(a,h)anthracene | 0.115 | 2.11 | --- | --- | <0.011 | <0.0067 | 0.077 | 0.16 | 0.11 | NA | 0.042J | NA | 0.045 | NA | 0.041 | NA |
| Fluoranthene | 2,390 | 30,100 | 88.8778 | --- | <0.0079 | <0.0091 | 0.76 | 1.1 | 1.7 | NA | 0.59 | NA | 0.43 | NA | 0.35 | NA |
| Fluorene | 2,390 | 30,100 | 14.8299 | --- | <0.0095 | <0.0091 | 0.028J | <0.030 | 0.098 | NA | 0.043 | NA | 0.029 | NA | <0.0099 | NA |
| Indeno(1,2,3-cd)pyrene | 1.15 | 21.1 | --- | --- | <0.011 | <0.0069 | 0.17 | 0.38 | 0.25 | NA | 0.099 | NA | 0.11 | NA | 0.1 | NA |
| 1-methyl naphthalene | 17.6 | 72.7 | --- | --- | NA | <0.0091 | 0.26 | 0.15 | 0.14 | NA | 0.68 | NA | 0.29 | NA | 0.075 | NA |
| 2-methyl naphthalene | 239 | 3,010 | --- | --- | NA | <0.0091 | 0.31 | 0.18 | 0.17 | NA | 0.89 | NA | 0.40 | NA | 0.096 | NA |
| Naphthalene | 5.52 | 24.1 | 0.6582 | --- | <0.016 | <0.0091 | 0.21 | 0.16 | 0.14 | NA | 0.56 | NA | 0.25 | NA | 0.089 | NA |
| Phenanthrene | --- | --- | --- | --- | <0.0073 | <0.0091 | 0.57 | 0.42 | 1.3 | NA | 0.77 | NA | 0.45 | NA | 0.18 | NA |
| Pyrene | 1,790 | 22,600 | 54.5455 | --- | <0.0089 | <0.0091 | 0.68 | 1.0 | 1.4 | NA | 0.52 | NA | 0.44 | NA | 0.31 | NA |
| Total Dectected PAHs | --- | --- | --- | --- | ND | ND | 5.70 | 8.28 | 9.64 | NA | 5.856 | NA | 3.937 | NA | 2.728 | NA |

Bold values exceed protection of groundwater residual contaminant level
Boxed values exceed non-industrial direct contact residual contaminant level
Underlined values exceeded the background threshold value
Metals that exceed the background threshold values are compared to residual contaminant levels
--- - no standard established
B - Compound was found in the blank and sample
F1 - matrix spike and/or matrix spike duplicate recovery is outside acceptance limits
F2 - matrix spike/matrix spike duplicate relative percent difference exceeds control limits

J - Results between laboratory limit of detection and limit of quanitification
bgs - below ground surface
NA - not analyzed or not available
ND - not detected
mg/kg - milligrams per kilogram
PAHs - polynuclear aromatic hydrocarbons
TCLP - toxicity characteristic leaching procedure
VOCs - volatile organic compounds

**Table 1. Soil Analytical Results**

**Former Wayne Pigment Corp, 300 Barclay Street and 139 Oregon Street, Milwaukee, Wisconsin**

| PARAMETERS | Non-Industrial Direct Contact Residual Contaminant Level | Industrial Direct Contact RCL (mg/kg) | Protection of Groundwater Residual Contaminant Level | Background Threshold Value | Sample ID | | | | | | | | | | | | |
|---|---|---|---|---|---|---|---|---|---|---|---|---|---|---|---|---|---|
| | | | | | SB-21 | | SB-22 | | SB-23 | | SB-24 | | SB-25 | | SB-26 | | SB-27 |
| Date Collected | | | | | 12/3/2015 | | 12/3/2015 | | 12/3/15 | | 12/3/2015 | | 12/4/2015 | | 12/4/2015 | | 11/5/15 |
| Depth (feet bgs) | | | | | 2-4 | 8-10 | 2-4 | 6-8 | 2-4 | 8-10 | 2-4 | 8-10 | 2-4 | 17.5-20 | 2-4 | 14-16 | 1-2 |
| Saturated(s)/Unsaturated(u) | | | | | u | s | u | s | u | s | u | s | u | s | u | s | u |
| **VOCs (mg/kg)** | | | | | | | | | | | | | | | | | |
| Benzene | 1.6 | 7.07 | 0.0051 | --- | **0.048J** | <0.025 | <0.062 | <0.025 | <0.025 | <0.025 | <2.0 | <0.025 | <0.025 | **0.049J** | <0.025 | **0.15** | <0.025 |
| Bromobenzene | 342 | 679 | --- | --- | <0.025 | <0.025 | <0.062 | <0.025 | <0.025 | <0.025 | <2.0 | <0.025 | <0.025 | <0.025 | <0.025 | <0.025 | <0.025 |
| Bromomethane | 9.6 | 43 | 0.0051 | --- | <0.070 | <0.070 | <0.17 | <0.070 | <0.070 | <0.070 | <5.6 | <0.070 | <0.070 | <0.070 | <0.070 | <0.070 | <0.070 |
| n-Butylbenzene | 108 | 108 | --- | --- | <0.025 | <0.025 | <0.062 | <0.025 | <0.025 | <0.025 | <2.0 | <0.025 | <0.025 | 0.13 | <0.025 | <0.025 | <0.025 |
| sec-Butylbenzene | 145 | 145 | --- | --- | <0.025 | 0.093 | <0.062 | <0.025 | <0.025 | <0.025 | <2.0 | <0.025 | <0.025 | 0.069J | 0.044J | <0.025 | <0.025 |
| tert-Butylbenzene | 183 | 183 | --- | --- | <0.025 | <0.025 | <0.062 | <0.025 | <0.025 | <0.025 | <2.0 | <0.025 | <0.025 | <0.025 | <0.025 | <0.025 | <0.025 |
| Chlorobenzene | 370 | 761 | --- | --- | <0.025 | <0.025 | <0.062 | <0.025 | <0.025 | <0.025 | <2.0 | <0.025 | <0.025 | <0.025 | <0.025 | <0.025 | <0.025 |
| Chloroethane | --- | --- | 0.2266 | --- | <0.067 | <0.067 | <0.17 | <0.067 | <0.067 | <0.067 | <5.4 | <0.067 | <0.067 | <0.067 | <0.067 | <0.067 | <0.067 |
| Chloroform | 0.454 | 1.98 | 0.0033 | --- | <0.046 | <0.046 | <0.12 | <0.046 | <0.046 | <0.046 | <3.7 | <0.046 | <0.046 | <0.046 | <0.046 | <0.046 | <0.046 |
| 1,1-Dichloroethane | 5.06 | 22.2 | 0.4828 | --- | <0.025 | <0.025 | <0.062 | 0.19 | <0.025 | <0.025 | <2.0 | 0.17 | <0.025 | <0.025 | <0.025 | <0.025 | <0.025 |
| 1,2-Dichloroethane | 0.652 | 2.87 | 0.0028 | --- | <0.025 | <0.025 | <0.062 | <0.025 | <0.025 | <0.025 | <2.0 | <0.025 | <0.025 | <0.025 | <0.025 | <0.025 | <0.025 |
| 1,1-Dichloroethene | 320 | 1,190 | 0.005 | --- | <0.025 | <0.025 | <0.062 | <0.025 | <0.025 | <0.025 | <2.0 | <0.025 | <0.025 | <0.025 | <0.025 | <0.025 | <0.025 |
| cis-1,2-Dichloroethene | 156 | 2340 | 0.0412 | --- | <0.025 | <0.025 | <0.062 | **0.58** | <0.025 | <0.025 | <2.0 | **0.61** | <0.025 | <0.025 | <0.025 | <0.025 | <0.025 |
| trans-1,2-Dichloroethene | 1,560 | 1850 | 0.0626 | --- | <0.025 | <0.025 | <0.062 | **0.45** | <0.025 | <0.025 | <2.0 | **0.40** | <0.025 | <0.025 | <0.025 | <0.025 | <0.025 |
| Di-isopropyl ether | 2,260 | 2260 | --- | --- | <0.025 | <0.025 | <0.062 | <0.025 | <0.025 | <0.025 | <2.0 | <0.025 | <0.025 | <0.025 | <0.025 | <0.025 | <0.025 |
| Ethylbenzene | 8.03 | 35.4 | 1.57 | --- | <0.025 | <0.025 | <0.062 | <0.025 | <0.025 | <0.025 | <2.0 | <0.025 | <0.025 | 0.12 | 0.085 | **2.6** | <0.025 |
| Hexachlorobutadiene | 1.63 | 7.49 | --- | --- | <0.025 | <0.025 | <0.062 | <0.025 | <0.025 | <0.025 | <2.0 | <0.025 | <0.025 | <0.025 | <0.025 | <0.025 | <0.025 |
| Isopropylbenzene | --- | --- | --- | --- | <0.025 | 0.14 | <0.062 | <0.025 | <0.025 | <0.025 | <2.0 | <0.025 | <0.025 | 0.092 | 0.041J | 0.18 | <0.025 |
| p-Isopropyltoluene | 162 | 162 | --- | --- | <0.025 | 0.049J | <0.062 | <0.025 | <0.025 | <0.025 | <2.0 | <0.025 | <0.025 | 0.13 | 0.086 | <0.025 | <0.025 |
| 2-Butanone (MEK) | 28,400 | 28,400 | 1.6661 | --- | NA | NA | NA | NA | NA | NA | NA | NA | NA | NA | NA | NA | NA |
| Methylene chloride | 61.8 | 1150 | 0.0026 | --- | <0.025 | <0.025 | <0.062 | <0.025 | <0.025 | <0.025 | <2.0 | <0.025 | <0.025 | <0.025 | <0.025 | <0.025 | <0.025 |
| Naphthalene | 5.52 | 24.1 | 0.6582 | --- | 0.087J | <0.040 | <0.10 | <0.040 | <0.040 | <0.040 | <3.2 | <0.040 | <0.040 | 0.083J | **0.86** | 0.23J | <0.040 |
| n-Propylbenzene | --- | --- | --- | --- | <0.025 | 0.080 | <0.062 | <0.025 | <0.025 | <0.025 | <2.0 | <0.025 | <0.025 | 0.14 | 0.074 | 0.14 | <0.025 |
| Styrene | 867 | 867 | 0.22 | --- | <0.025 | <0.025 | <0.062 | <0.025 | <0.025 | <0.025 | <2.0 | <0.025 | <0.025 | <0.025 | <0.025 | <0.025 | <0.025 |
| Tetrachloroethene | 33 | 145 | 0.0045 | --- | <0.025 | <0.025 | **6.8** | <0.025 | <0.025 | <0.025 | <2.0 | <0.025 | <0.025 | <0.025 | <0.025 | <0.025 | <0.025 |
| Toluene | 818 | 818 | 1.1072 | --- | 0.38 | <0.025 | 0.44 | <0.025 | <0.025 | <0.025 | <2.0 | <0.025 | 0.044J | 0.038J | 0.47 | <0.025 | <0.025 |
| 1,2,3-Trichlorobenzene | 62.6 | 934 | --- | --- | <0.025 | <0.025 | <0.062 | <0.025 | <0.025 | <0.025 | <2.0 | <0.025 | <0.025 | <0.025 | <0.025 | <0.025 | <0.025 |
| 1,2,4-Trichlorobenzene | 24 | 113 | 0.408 | --- | <0.048 | <0.048 | <0.12 | <0.048 | <0.048 | <0.048 | <3.8 | <0.048 | <0.048 | <0.048 | <0.048 | <0.048 | <0.025 |
| 1,1,1-Trichloroethane | 640 | 640 | 0.1402 | --- | <0.025 | <0.025 | **15.8** | 0.061J | 0.043J | <0.025 | **32.0** | <0.025 | <0.025 | <0.025 | <0.025 | <0.025 | <0.025 |
| 1,1,2-Trichloroethane | 1.59 | 7.01 | 0.0032 | --- | <0.025 | <0.025 | <0.062 | <0.025 | <0.025 | <0.025 | <2.0 | <0.025 | <0.025 | <0.025 | <0.025 | <0.025 | <0.025 |
| Trichloroethene | 1.3 | 8.41 | 0.0036 | --- | <0.025 | <0.025 | **19.3** | **4.2** | <0.025 | <0.025 | **437** | **0.30** | <0.025 | <0.025 | <0.025 | <0.025 | <0.025 |
| Trichlorofluoromethane | 1,230 | 1230 | 4.4758 | --- | <0.025 | <0.025 | <0.062 | <0.025 | <0.025 | <0.025 | <2.0 | <0.025 | 0.055J | <0.025 | <0.025 | <0.025 | <0.025 |
| 1,2,3-Trimethylbenzene | 182 | 182 | --- | --- | NA | NA | NA | NA | NA | NA | NA | NA | NA | NA | NA | NA | NA |
| 1,2,4-Trimethylbenzene | 219 | 219 | --- | --- | 0.088 | 0.27 | <0.062 | <0.025 | <0.025 | <0.025 | <2.0 | <0.025 | 0.096 | 1.2 | 0.79 | 0.51 | <0.025 |
| 1,3,5-Trimethylbenzene | 182 | 182 | --- | --- | 0.062J | 0.074 | <0.062 | <0.025 | <0.025 | <0.025 | <2.0 | <0.025 | 0.068J | 0.49 | 0.56 | 0.49 | <0.025 |
| Trimethylbenzenes | --- | --- | 1.3821 | --- | 0.150J | 0.344 | <0.062 | <0.050 | <0.050 | <0.050 | <4.0 | <0.050 | 0.164J | **1.69** | 1.35 | 1.0 | <0.025 |
| Vinyl Chloride | 0.067 | 2.08 | 0.0001 | --- | <0.025 | **<0.025** | <0.062 | <0.025 | <0.025 | <0.025 | <2.0 | **0.34** | <0.025 | <0.025 | <0.025 | <0.025 | <0.025 |
| m&p-Xylene | --- | --- | --- | --- | 0.11J | 0.48 | <0.12 | <0.050 | <0.050 | <0.050 | <4.0 | <0.050 | 0.12J | 0.72 | 1.1 | 2.6 | <0.050 |
| o-Xylene | --- | --- | --- | --- | 0.075 | <0.025 | <0.062 | <0.025 | <0.025 | <0.025 | <2.0 | <0.025 | 0.056J | 0.19 | 0.39 | 0.050J | <0.025 |
| Xylenes | 260 | 260 | 3.96 | --- | 0.185J | 0.48 | <0.12 | <0.025 | <0.025 | <0.025 | <2.0 | <0.025 | 0.176J | 0.91 | 1.49 | 2.65J | <0.025 |

**Table 1. Soil Analytical Results**

**Former Wayne Pigment Corp, 300 Barclay Street and 139 Oregon Street, Milwaukee, Wisconsin**

| PARAMETERS | Non-Industrial Direct Contact Residual Contaminant Level | Industrial Direct Contact RCL (mg/kg) | Protection of Groundwater Residual Contaminant Level | Background Threshold Value | Sample ID | | | | | | | | | | | | |
|---|---|---|---|---|---|---|---|---|---|---|---|---|---|---|---|---|---|
| | | | | | SB-21 | | SB-22 | | SB-23 | | SB-24 | | SB-25 | | SB-26 | | SB-27 |
| Date Collected | | | | | 12/3/2015 | | 12/3/2015 | | 12/3/15 | | 12/3/2015 | | 12/4/2015 | | 12/4/2015 | | 11/5/15 |
| Depth (feet bgs) | | | | | 2-4 | 8-10 | 2-4 | 6-8 | 2-4 | 8-10 | 2-4 | 8-10 | 2-4 | 17.5-20 | 2-4 | 14-16 | 1-2 |
| Saturated(s)/Unsaturated(u) | | | | | u | s | u | s | u | s | u | s | u | s | u | s | u |
| **Metals (mg/kg)** | | | | | | | | | | | | | | | | | |
| Arsenic | 0.677 | 3 | 0.584 | 8.0 | **54.3** | 7.6J | **22.3** | **16.1** | **8.1** | 5.2 | NA | NA | **1,100** | **111** | **3,120** | **1,960** | 4.1 |
| Barium | 15,300 | 100,000 | 164.8 | 364 | 294 | NA | 75.4 | NA | 89.4 | NA | NA | NA | 83.8 | NA | 345 | NA | 47.4 |
| Cadmium | 71 | 985 | 0.752 | 1.0 | NA | NA | NA | NA | NA | NA | NA | NA | NA | NA | NA | NA | 0.12J |
| Chromium | --- | --- | 360,000 | 44 | 42.7 | 10.7 | 73.9 | 25.4 | 24.6 | 13.3 | 73.4 | 5.9 | 6,420 | 207 | 146 | 3,090 | 14.7 |
| Trivalent Chromium | 100,000 | 100,000 | --- | --- | 37.9 | 10.7 | 63.8 | 25.4 | 21.4 | 13.3 | NA | NA | 6,320.9 | 200.6 | 139.1 | 3,065.5 | NA |
| Hexavalent Chromium | 0.301 | 6 | --- | --- | 4.80 | <1.92 | 10.1 | <1.92 | 3.18 | <1.92 | NA | NA | 99.1 | 6.45 | 6.95 | 24.5 | NA |
| Lead | 400 | 800 | 27 | 52 | **281** | NA | NA | NA | 26.8 | NA | **253** | 5.2 | **724** | NA | **1,100** | NA | **55.8** |
| Mercury | 3.13 | 3.13 | 0.208 | --- | NA | NA | NA | NA | NA | NA | NA | NA | NA | NA | NA | NA | 0.026 |
| Selenium | 391 | 5,840 | 0.52 | --- | NA | NA | NA | NA | NA | NA | NA | NA | NA | NA | NA | NA | <0.81 |
| Silver | 391 | 5,840 | 0.8491 | --- | NA | NA | NA | NA | NA | NA | NA | NA | NA | NA | NA | NA | <0.29 |
| **PAHs (mg/kg)** | | | | | | | | | | | | | | | | | |
| Acenaphthene | 3,590 | 45,200 | --- | --- | <0.099 | NA | 0.022J | NA | 0.68 | NA | 0.21 | NA | 0.023J | NA | 1.9 | NA | <0.0093 |
| Acenaphthylene | --- | --- | --- | --- | 0.11J | NA | 0.083 | NA | 0.37J | NA | <0.072 | NA | <0.018 | NA | 1.1 | NA | <0.0083 |
| Anthracene | 17,200 | 100,000 | 196.9492 | --- | 0.44 | NA | 0.20 | NA | 2.4 | NA | 0.82 | NA | 0.11 | NA | 10.1 | NA | 0.011J |
| Benzo(a)anthracene | 1.14 | 20.8 | --- | --- | 1.0 | NA | 0.48 | NA | 4.0 | NA | 1.6 | NA | 0.29 | NA | 15.0 | NA | 0.027 |
| Benzo(a)pyrene | 0.115 | 2.11 | 0.470 | --- | **1.1** | NA | **0.54** | NA | **3.8** | NA | **1.5** | NA | 0.29 | NA | **14.1** | NA | 0.028 |
| Benzo(b)fluoranthene | 1.15 | 21.1 | 0.4793 | --- | **0.97** | NA | **0.63** | NA | **3.2** | NA | **1.4** | NA | 0.40 | NA | **10.6** | NA | 0.027 |
| Benzo(g,h,i)perylene | --- | --- | --- | --- | 0.68 | NA | 0.44 | NA | 2.2 | NA | 0.99 | NA | 0.11 | NA | 6.5 | NA | 0.019 |
| Benzo(k)fluoranthene | 11.5 | 211 | --- | --- | 0.99 | NA | 0.48 | NA | 3.3 | NA | 1.5 | NA | 0.35 | NA | 13.8 | NA | 0.026 |
| Chrysene | 115 | 2,110 | 0.1446 | --- | **1.1** | NA | **0.67** | NA | **4.3** | NA | **1.8** | NA | **0.58** | NA | **16.3** | NA | 0.035 |
| Dibenzo(a,h)anthracene | 0.115 | 2.11 | --- | --- | 0.19J | NA | 0.14 | NA | 0.68 | NA | 0.33 | NA | 0.045 | NA | 2.5 | NA | <0.0068 |
| Fluoranthene | 2,390 | 30,100 | 88.8778 | --- | 2.2 | NA | 1.1 | NA | 9.1 | NA | 3.5 | NA | 0.73 | NA | 35.0 | NA | 0.055 |
| Fluorene | 2,390 | 30,100 | 14.8299 | --- | <0.099 | NA | 0.041J | NA | 0.63 | NA | 0.24 | NA | 0.021J | NA | 3.3 | NA | <0.0093 |
| Indeno(1,2,3-cd)pyrene | 1.15 | 21.1 | --- | --- | 0.59 | NA | 0.37 | NA | 1.9 | NA | 0.88 | NA | 0.12 | NA | 6.3 | NA | 0.016J |
| 1-methyl naphthalene | 17.6 | 72.7 | --- | --- | 0.11J | NA | 0.079 | NA | 0.32J | NA | 0.54 | NA | <0.020 | NA | 0.68J | NA | <0.0093 |
| 2-methyl naphthalene | 239 | 3,010 | --- | --- | 0.13J | NA | 0.089 | NA | 0.25J | NA | 0.68 | NA | <0.020 | NA | 0.69J | NA | <0.0093 |
| Naphthalene | 5.52 | 24.1 | 0.6582 | --- | 0.12J | NA | 0.098 | NA | 0.40 | NA | 0.61 | NA | 0.032J | NA | **0.94** | NA | <0.0093 |
| Phenanthrene | --- | --- | --- | --- | 1.4 | NA | 0.70 | NA | 8.1 | NA | 3.0 | NA | 0.33 | NA | 30.7 | NA | 0.035 |
| Pyrene | 1,790 | 22,600 | 54.5455 | --- | 2.0 | NA | 0.90 | NA | 9.0 | NA | 3.1 | NA | 0.57 | NA | 30.9 | NA | 0.051 |
| Total Dectected PAHs | --- | --- | --- | --- | 12.66 | NA | 7.219 | NA | 54.63 | NA | 22.7 | NA | 4.001 | NA | 200.41 | NA | 0.330 |

Bold values exceed protection of groundwater residual contaminant level
Boxed values exceed non-industrial direct contact residual contaminant level
Underlined values exceeded the background threshold value
Metals that exceed the background threshold values are compared to residual contaminant levels
--- - no standard established
B - Compound was found in the blank and sample
F1 - matrix spike and/or matrix spike duplicate recovery is outside acceptance limits
F2 - matrix spike/matrix spike duplicate relative percent difference exceeds control limits

J - Results between laboratory limit of detection and limit of quanitification
bgs - below ground surface
NA - not analyzed or not available
ND - not detected
mg/kg - milligrams per kilogram
PAHs - polynuclear aromatic hydrocarbons
TCLP - toxicity characteristic leaching procedure
VOCs - volatile organic compounds

**Table 1. Soil Analytical Results**

**Former Wayne Pigment Corp, 300 Barclay Street and 139 Oregon Street, Milwaukee, Wisconsin**

| PARAMETERS | Non-Industrial Direct Contact Residual Contaminant Level | Industrial Direct Contact RCL (mg/kg) | Protection of Groundwater Residual Contaminant Level | Background Threshold Value | Sample ID | | | | | | | | | | | | |
|---|---|---|---|---|---|---|---|---|---|---|---|---|---|---|---|---|---|
| | | | | | SB-28 | SB-29 | | SB-30 | | SB-31 | | SB-32 | | SB-33 | | SB-34 | |
| Date Collected | | | | | 11/5/15 | 12/4/2015 | | 12/4/2015 | | 12/24/2015 | | 12/4/2015 | | 12/4/2015 | | 12/3/2015 | |
| Depth (feet bgs) | | | | | 1-2 | 2-4 | 12-14 | 2-4 | 12-14 | 2-4 | 16-18 | 2-4 | 15-17 | 2-4 | 14-16 | 2-4 | 8-10 |
| Saturated(s)/Unsaturated(u) | | | | | u | u | s | u | s | u | s | u | s | u | s | u | s |
| **VOCs (mg/kg)** | | | | | | | | | | | | | | | | | |
| Benzene | 1.6 | 7.07 | 0.0051 | --- | **0.031J** | <0.025 | **0.063J** | <0.025 | <0.025 | <0.12 | <0.025 | <0.025 | <0.062 | <0.025 | <0.025 | <0.062 | <0.025 |
| Bromobenzene | 342 | 679 | --- | --- | <0.025 | <0.025 | <0.025 | <0.025 | <0.025 | <0.12 | <0.025 | <0.025 | <0.062 | <0.025 | <0.025 | <0.062 | <0.025 |
| Bromomethane | 9.6 | 43 | 0.0051 | --- | <0.070 | <0.070 | <0.070 | <0.070 | <0.070 | <0.35 | <0.070 | <0.070 | <0.17 | <0.070 | <0.070 | <0.17 | <0.070 |
| n-Butylbenzene | 108 | 108 | --- | --- | <0.025 | <0.025 | 0.45 | <0.025 | 0.25 | <0.12 | <0.025 | <0.025 | 1.0 | <0.025 | <0.025 | <0.062 | <0.025 |
| sec-Butylbenzene | 145 | 145 | --- | --- | <0.025 | <0.025 | 0.35 | <0.025 | 0.49 | <0.12 | <0.025 | <0.025 | 1.2 | <0.025 | <0.025 | <0.062 | <0.025 |
| tert-Butylbenzene | 183 | 183 | --- | --- | <0.025 | <0.025 | <0.025 | <0.025 | <0.025 | <0.12 | <0.025 | <0.025 | <0.062 | <0.025 | <0.025 | <0.062 | <0.025 |
| Chlorobenzene | 370 | 761 | --- | --- | <0.025 | <0.025 | <0.025 | <0.025 | <0.025 | <0.12 | <0.025 | <0.025 | <0.062 | <0.025 | <0.025 | <0.062 | <0.025 |
| Chloroethane | --- | --- | 0.2266 | --- | <0.067 | <0.067 | <0.067 | <0.067 | <0.067 | <0.34 | <0.067 | <0.067 | <0.17 | <0.067 | <0.067 | <0.17 | <0.067 |
| Chloroform | 0.454 | 1.98 | 0.0033 | --- | <0.046 | <0.046 | <0.046 | <0.046 | <0.046 | <0.23 | <0.046 | <0.046 | <0.12 | <0.046 | <0.046 | <0.12 | <0.046 |
| 1,1-Dichloroethane | 5.06 | 22.2 | 0.4828 | --- | <0.025 | <0.025 | <0.025 | <0.025 | <0.025 | <0.12 | <0.025 | <0.025 | <0.062 | <0.025 | <0.025 | 0.14J | <0.025 |
| 1,2-Dichloroethane | 0.652 | 2.87 | 0.0028 | --- | <0.025 | <0.025 | <0.025 | <0.025 | <0.025 | <0.12 | <0.025 | <0.025 | <0.062 | <0.025 | <0.025 | <0.062 | <0.025 |
| 1,1-Dichloroethene | 320 | 1,190 | 0.005 | --- | <0.025 | <0.025 | <0.025 | <0.025 | <0.025 | <0.12 | <0.025 | <0.025 | <0.062 | <0.025 | <0.025 | <0.062 | <0.025 |
| cis-1,2-Dichloroethene | 156 | 2340 | 0.0412 | --- | <0.025 | <0.025 | <0.025 | <0.025 | <0.025 | <0.12 | <0.025 | <0.025 | <0.062 | <0.025 | <0.025 | **0.65** | <0.025 |
| trans-1,2-Dichloroethene | 1,560 | 1850 | 0.0626 | --- | <0.025 | <0.025 | <0.025 | <0.025 | <0.025 | <0.12 | <0.025 | <0.025 | <0.062 | <0.025 | <0.025 | <0.062 | <0.025 |
| Di-isopropyl ether | 2,260 | 2260 | --- | --- | <0.025 | <0.025 | <0.025 | <0.025 | <0.025 | <0.12 | <0.025 | <0.025 | <0.062 | <0.025 | <0.025 | <0.062 | <0.025 |
| Ethylbenzene | 8.03 | 35.4 | 1.57 | --- | 0.13 | <0.025 | 0.32 | 0.032J | 0.14 | **28.0** | 0.14 | <0.025 | 0.071J | <0.025 | 0.086 | <0.062 | <0.025 |
| Hexachlorobutadiene | 1.63 | 7.49 | --- | --- | <0.025 | <0.025 | <0.025 | <0.025 | <0.025 | <0.12 | <0.025 | <0.025 | <0.062 | <0.025 | <0.025 | <0.062 | <0.025 |
| Isopropylbenzene | --- | --- | --- | --- | <0.025 | <0.025 | 1.7 | <0.025 | 3.8 | 3.1 | <0.025 | 0.11 | 11.2 | <0.025 | 0.030J | <0.062 | <0.025 |
| p-Isopropyltoluene | 162 | 162 | --- | --- | <0.025 | <0.025 | 0.12 | <0.025 | <0.025 | 1.5 | <0.025 | <0.025 | <0.062 | <0.025 | <0.025 | <0.062 | <0.025 |
| 2-Butanone (MEK) | 28,400 | 28,400 | 1.6661 | --- | NA | NA | NA | NA | NA | NA | NA | NA | NA | NA | NA | NA | NA |
| Methylene chloride | 61.8 | 1150 | 0.0026 | --- | <0.025 | <0.025 | <0.025 | **0.039J** | **0.044J** | <0.12 | <0.025 | **0.043J** | **0.082J** | <0.025 | **0.033J** | <0.062 | **0.055J** |
| Naphthalene | 5.52 | 24.1 | 0.6582 | --- | 0.061J | <0.040 | 0.16J | **0.84** | 0.096J | 0.28J | <0.040 | <0.040 | 0.12J | <0.040 | <0.040 | <0.10 | <0.040 |
| n-Propylbenzene | --- | --- | --- | --- | <0.025 | <0.025 | 0.71 | <0.025 | 0.47 | 0.27J | <0.025 | <0.025 | 2.1 | <0.025 | <0.025 | <0.062 | <0.025 |
| Styrene | 867 | 867 | 0.22 | --- | <0.025 | <0.025 | <0.025 | <0.025 | <0.025 | <0.12 | <0.025 | <0.025 | <0.062 | <0.025 | <0.025 | <0.062 | <0.025 |
| Tetrachloroethene | 33 | 145 | 0.0045 | --- | <0.025 | <0.025 | <0.025 | <0.025 | <0.025 | <0.12 | <0.025 | <0.025 | <0.062 | <0.025 | <0.025 | <0.062 | <0.025 |
| Toluene | 818 | 818 | 1.1072 | --- | **3.3** | <0.025 | **2.4** | 0.051J | <0.025 | <0.12 | <0.025 | <0.025 | <0.062 | <0.025 | <0.025 | 0.15J | <0.025 |
| 1,2,3-Trichlorobenzene | 62.6 | 934 | --- | --- | <0.025 | <0.025 | <0.025 | <0.025 | <0.025 | <0.12 | <0.025 | <0.025 | <0.062 | <0.025 | <0.025 | <0.062 | <0.025 |
| 1,2,4-Trichlorobenzene | 24 | 113 | 0.408 | --- | <0.048 | <0.048 | <0.048 | <0.048 | <0.048 | <0.24 | <0.048 | <0.048 | <0.12 | <0.048 | <0.048 | <0.12 | <0.048 |
| 1,1,1-Trichloroethane | 640 | 640 | 0.1402 | --- | <0.025 | <0.025 | <0.025 | <0.025 | <0.025 | <0.12 | <0.025 | <0.025 | <0.062 | <0.025 | <0.025 | **3.5** | <0.025 |
| 1,1,2-Trichloroethane | 1.59 | 7.01 | 0.0032 | --- | <0.025 | <0.025 | <0.025 | <0.025 | <0.025 | <0.12 | <0.025 | <0.025 | <0.062 | <0.025 | <0.025 | <0.062 | <0.025 |
| Trichloroethene | 1.3 | 8.41 | 0.0036 | --- | <0.025 | <0.025 | <0.025 | <0.025 | <0.025 | <0.12 | <0.025 | <0.025 | <0.062 | <0.025 | <0.025 | **21.5** | **0.032J** |
| Trichlorofluoromethane | 1,230 | 1230 | 4.4758 | --- | <0.025 | <0.025 | <0.025 | <0.025 | <0.025 | <0.12 | <0.025 | <0.025 | <0.062 | <0.025 | <0.025 | <0.062 | <0.025 |
| 1,2,3-Trimethylbenzene | 182 | 182 | --- | --- | NA | NA | NA | NA | NA | NA | NA | NA | NA | NA | NA | NA | NA |
| 1,2,4-Trimethylbenzene | 219 | 219 | --- | --- | 0.19 | <0.025 | 0.43 | 0.12 | 0.45 | 1.5 | 0.072J | 0.17 | <0.062 | 0.057J | 0.088 | 0.19J | <0.025 |
| 1,3,5-Trimethylbenzene | 182 | 182 | --- | --- | 0.13 | <0.025 | <0.025 | 0.075 | <0.025 | 0.58 | <0.025 | 0.074J | 0.19 | <0.025 | 0.062J | 0.14J | <0.025 |
| Trimethylbenzenes | --- | --- | 1.3821 | --- | 0.32 | <0.025 | 0.43 | 1.195 | 0.45 | **2.08** | 0.072J | 0.244J | 0.19 | 0.057J | 0.150J | 0.33J | <0.050 |
| Vinyl Chloride | 0.067 | 2.08 | 0.0001 | --- | <0.025 | <0.025 | <0.025 | <0.025 | <0.025 | <0.12 | <0.025 | <0.025 | <0.062 | <0.025 | <0.025 | <0.062 | <0.025 |
| m&p-Xylene | --- | --- | --- | --- | 0.70 | <0.050 | 1.6 | 0.18 | 0.41 | 78.5 | 0.31 | 0.14J | 0.42 | <0.050 | 0.19 | <0.12 | <0.050 |
| o-Xylene | --- | --- | --- | --- | 0.36 | <0.025 | 0.24 | 0.093 | <0.025 | 25.6 | 0.21 | <0.025 | <0.062 | <0.025 | <0.025 | <0.062 | <0.025 |
| Xylenes | 260 | 260 | 3.96 | --- | 1.06 | <0.025 | 1.84 | 0.273 | 0.41 | **104.1** | 0.52 | 0.14J | 0.42 | <0.025 | 0.19 | <0.12 | <0.050 |

**Table 1. Soil Analytical Results**

**Former Wayne Pigment Corp, 300 Barclay Street and 139 Oregon Street, Milwaukee, Wisconsin**

| PARAMETERS | Non-Industrial Direct Contact Residual Contaminant Level | Industrial Direct Contact RCL (mg/kg) | Protection of Groundwater Residual Contaminant Level | Background Threshold Value | Sample ID | | | | | | | | | | | | |
|---|---|---|---|---|---|---|---|---|---|---|---|---|---|---|---|---|---|
| | | | | | SB-28 | SB-29 | | SB-30 | | SB-31 | | SB-32 | | SB-33 | | SB-34 | |
| Date Collected | | | | | 11/5/15 | 12/4/2015 | | 12/4/2015 | | 12/24/2015 | | 12/4/2015 | | 12/4/2015 | | 12/3/2015 | |
| Depth (feet bgs) | | | | | 1-2 | 2-4 | 12-14 | 2-4 | 12-14 | 2-4 | 16-18 | 2-4 | 15-17 | 2-4 | 14-16 | 2-4 | 8-10 |
| Saturated(s)/Unsaturated(u) | | | | | u | u | s | u | s | u | s | u | s | u | s | u | s |
| **Metals (mg/kg)** | | | | | | | | | | | | | | | | | |
| Arsenic | 0.677 | 3 | 0.584 | 8.0 | **18.4** | 5.7J | **33.2** | **1630** | **14.6** | **25.9** | **710** | **26.6** | **27.3** | 6.9 | **106** | NA | NA |
| Barium | 15,300 | 100,000 | 164.8 | 364 | 169 | 23.4 | NA | 310 | NA | 55.8 | NA | 25.4 | NA | 29.7 | NA | NA | NA |
| Cadmium | 71 | 985 | 0.752 | 1.0 | **8.8** | NA | NA | NA | NA | NA | NA | NA | NA | NA | NA | NA | NA |
| Chromium | --- | --- | 360,000 | 44 | 45.0 | 28.1 | 65.9 | 493 | 2,180 | 31.8 | 149 | 58.1 | 50.1 | 12.1 | 271 | 73.9 | NA |
| Trivalent Chromium | 100,000 | 100,000 | --- | --- | NA | 26.1 | 62.9 | 485.2 | 2,159.9 | NA | NA | 53.6 | 41.3 | 12.1 | 262.9 | NA | NA |
| Hexavalent Chromium | 0.301 | 6 | --- | --- | NA | 1.96 | 3.05 | 7.82 | 20.1 | <1.92 | NA | 4.47 | 8.82 | <1.92 | 8.07 | NA | NA |
| Lead | 400 | 800 | 27 | 52 | **464** | NA | NA | **719** | NA | 12.2 | NA | **69.1** | NA | NA | NA | **771** | 14.6 |
| Mercury | 3.13 | 3.13 | 0.208 | --- | **0.29** | NA | NA | NA | NA | NA | NA | NA | NA | NA | NA | NA | NA |
| Selenium | 391 | 5,840 | 0.52 | --- | <3.8 | NA | NA | NA | NA | NA | NA | NA | NA | NA | NA | NA | NA |
| Silver | 391 | 5,840 | 0.8491 | --- | <1.4 | NA | NA | NA | NA | NA | NA | NA | NA | NA | NA | NA | NA |
| **PAHs (mg/kg)** | | | | | | | | | | | | | | | | | |
| Acenaphthene | 3,590 | 45,200 | --- | --- | <0.048 | <0.0088 | NA | 3.8 | NA | <0.011 | NA | <0.010 | NA | <0.0087 | NA | 0.052J | NA |
| Acenaphthylene | --- | --- | --- | --- | 0.14 | <0.0079 | NA | <0.69 | NA | <0.0095 | NA | <0.0092 | NA | <0.0077 | NA | 0.078J | NA |
| Anthracene | 17,200 | 100,000 | 196.9492 | --- | 0.25 | <0.0091 | NA | 10.8 | NA | <0.011 | NA | <0.011 | NA | <0.0090 | NA | 0.42 | NA |
| Benzo(a)anthracene | 1.14 | 20.8 | --- | --- | 0.45 | 0.0086J | NA | 24.0 | NA | 0.010J | NA | 0.017J | NA | <0.0060 | NA | 0.75 | NA |
| Benzo(a)pyrene | 0.115 | 2.11 | 0.470 | --- | 0.45 | 0.014J | NA | **24.4** | NA | 0.0094J | NA | 0.021 | NA | <0.0062 | NA | **0.72** | NA |
| Benzo(b)fluoranthene | 1.15 | 21.1 | 0.4793 | --- | **0.81** | 0.019 | NA | **23.0** | NA | <0.011 | NA | 0.021 | NA | <0.0087 | NA | **1.1** | NA |
| Benzo(g,h,i)perylene | --- | --- | --- | --- | 0.37 | 0.013J | NA | 12.6 | NA | <0.0081 | NA | 0.011J | NA | <0.0066 | NA | 0.65 | NA |
| Benzo(k)fluoranthene | 11.5 | 211 | --- | --- | 0.59 | 0.018 | NA | 25.5 | NA | <0.012 | NA | 0.025 | NA | <0.0096 | NA | 0.95 | NA |
| Chrysene | 115 | 2,110 | 0.1446 | --- | **0.92** | 0.016J | NA | **28.6** | NA | 0.012J | NA | 0.025 | NA | <0.0080 | NA | **1.1** | NA |
| Dibenzo(a,h)anthracene | 0.115 | 2.11 | --- | --- | 0.13 | <0.0064 | NA | 4.5 | NA | <0.0078 | NA | <0.0075 | NA | <0.0064 | NA | 0.19 | NA |
| Fluoranthene | 2,390 | 30,100 | 88.8778 | --- | 1.1 | 0.013J | NA | 65.4 | NA | 0.020J | NA | 0.032 | NA | <0.0087 | NA | 1.7 | NA |
| Fluorene | 2,390 | 30,100 | 14.8299 | --- | <0.048 | <0.0088 | NA | 3.6 | NA | <0.011 | NA | <0.010 | NA | <0.0087 | NA | 0.057J | NA |
| Indeno(1,2,3-cd)pyrene | 1.15 | 21.1 | --- | --- | 0.34 | 0.011J | NA | 12.5 | NA | <0.0080 | NA | 0.010J | NA | <0.0066 | NA | 0.57 | NA |
| 1-methyl naphthalene | 17.6 | 72.7 | --- | --- | 0.27 | <0.0088 | NA | 0.79J | NA | <0.011 | NA | <0.010 | NA | <0.0087 | NA | 0.63 | NA |
| 2-methyl naphthalene | 239 | 3,010 | --- | --- | 0.32 | <0.0088 | NA | 0.84J | NA | <0.011 | NA | <0.010 | NA | <0.0087 | NA | 0.76 | NA |
| Naphthalene | 5.52 | 24.1 | 0.6582 | --- | 0.24 | <0.0088 | NA | **2.1** | NA | 0.077 | NA | <0.010 | NA | <0.0087 | NA | 0.54 | NA |
| Phenanthrene | --- | --- | --- | --- | 0.62 | <0.0088 | NA | 44.5 | NA | 0.015J | NA | 0.012J | NA | <0.0087 | NA | 1.2 | NA |
| Pyrene | 1,790 | 22,600 | 54.5455 | --- | 0.82 | 0.016J | NA | 53.5 | NA | 0.018J | NA | 0.031 | NA | <0.0087 | NA | 1.6 | NA |
| Total Dectected PAHs | --- | --- | --- | --- | 7.82 | 0.1286 | NA | 338.8 | NA | 0.16 | NA | 0.21 | NA | ND | NA | 13.07 | NA |

Bold values exceed protection of groundwater residual contaminant level
Boxed values exceed non-industrial direct contact residual contaminant level
Underlined values exceeded the background threshold value
Metals that exceed the background threshold values are compared to residual contaminant levels
--- - no standard established
B - Compound was found in the blank and sample
F1 - matrix spike and/or matrix spike duplicate recovery is outside acceptance limits
F2 - matrix spike/matrix spike duplicate relative percent difference exceeds control limits

J - Results between laboratory limit of detection and limit of quanitification
bgs - below ground surface
NA - not analyzed or not available
ND - not detected
mg/kg - milligrams per kilogram
PAHs - polynuclear aromatic hydrocarbons
TCLP - toxicity characteristic leaching procedure
VOCs - volatile organic compounds

**Table 1. Soil Analytical Results**

**Former Wayne Pigment Corp, 300 Barclay Street and 139 Oregon Street, Milwaukee, Wisconsin**

| PARAMETERS | Non-Industrial Direct Contact Residual Contaminant Level | Industrial Direct Contact RCL (mg/kg) | Protection of Groundwater Residual Contaminant Level | Background Threshold Value | Sample ID | | | | | | | | | | | | |
|---|---|---|---|---|---|---|---|---|---|---|---|---|---|---|---|---|---|
| | | | | | SB-35 | | SB-36 | | SB-37 | | SB-38 | SB-39 | | SB-40 | SB-42 | SB-42 | SB-43 |
| Date Collected | | | | | 3/7/2016 | | 3/7/2016 | | 3/7/2016 | | 3/7/2016 | 3/7/2016 | | 3/7/2016 | 9/7/2016 | 9/7/2016 | 9/7/2016 |
| Depth (feet bgs) | | | | | 2-4 | 6-8 | 2-4 | 6-8 | 2-4 | 4-6 | 4-6 | 2-4 | 4-6 | 2-4 | 2-4 | 6-8 | 2-4 |
| Saturated(s)/Unsaturated(u) | | | | | u | u | u | u | u | u | u | u | u | u | u | u | u |
| **VOCs (mg/kg)** | | | | | | | | | | | | | | | | | |
| Benzene | 1.6 | 7.07 | 0.0051 | --- | <0.025 | <1.2 | <2.5 | **1.7J** | <0.025 | <0.025 | <0.025 | <3.1 | <1.2 | <0.062 | <0.025 | <0.10 | <0.025 |
| Bromobenzene | 342 | 679 | --- | --- | <0.025 | <1.2 | <2.5 | <0.62 | <0.025 | <0.025 | <0.025 | <3.1 | <1.2 | <0.062 | <0.025 | <0.10 | <0.025 |
| Bromomethane | 9.6 | 43 | 0.0051 | --- | <0.070 | <3.5 | <7.0 | <1.7 | <0.070 | <0.070 | <0.070 | <8.7 | <3.5 | <0.17 | <0.070 | <0.28 | <0.070 |
| n-Butylbenzene | 108 | 108 | --- | --- | <0.025 | <1.2 | <2.5 | 3.5 | <0.025 | <0.025 | <0.025 | <3.1 | <1.2 | <0.062 | <0.025 | 0.39 | <0.025 |
| sec-Butylbenzene | 145 | 145 | --- | --- | <0.025 | 24.7 | 8.8 | 1.9J | <0.025 | <0.025 | <0.025 | <3.1 | <1.2 | <0.062 | <0.025 | 0.37 | <0.025 |
| tert-Butylbenzene | 183 | 183 | --- | --- | <0.025 | 4.5 | <2.5 | <0.62 | <0.025 | <0.025 | <0.025 | <3.1 | <1.2 | <0.062 | <0.025 | <0.10 | <0.025 |
| Chlorobenzene | 370 | 761 | --- | --- | <0.025 | <1.2 | <2.5 | <0.62 | <0.025 | <0.025 | <0.025 | <3.1 | <1.2 | <0.062 | <0.025 | <0.10 | <0.025 |
| Chloroethane | --- | --- | 0.2266 | --- | <0.067 | <3.4 | <6.7 | <1.7 | <0.067 | <0.067 | <0.067 | <8.4 | <3.4 | <0.17 | <0.067 | <0.27 | <0.067 |
| Chloroform | 0.454 | 1.98 | 0.0033 | --- | <0.046 | <2.3 | <4.6 | <1.2 | <0.046 | <0.046 | <0.046 | <5.8 | <2.3 | <0.12 | <0.046 | <0.19 | <0.046 |
| 1,1-Dichloroethane | 5.06 | 22.2 | 0.4828 | --- | <0.025 | <1.2 | <2.5 | <0.62 | <0.025 | 0.11 | 0.40 | <3.1 | **16.7** | <0.062 | <0.025 | <0.10 | <0.025 |
| 1,2-Dichloroethane | 0.652 | 2.87 | 0.0028 | --- | <0.025 | <1.2 | <2.5 | <0.62 | <0.025 | <0.025 | <0.025 | <3.1 | <1.2 | <0.062 | <0.025 | <0.10 | <0.025 |
| 1,1-Dichloroethene | 320 | 1,190 | 0.005 | --- | <0.025 | <1.2 | <2.5 | <0.62 | <0.025 | <0.025 | <0.025 | <3.1 | <1.2 | <0.062 | <0.025 | <0.10 | <0.025 |
| cis-1,2-Dichloroethene | 156 | 2340 | 0.0412 | --- | <0.025 | <1.2 | <2.5 | <0.62 | <0.025 | <0.025 | <0.025 | <3.1 | <1.2 | **0.32** | <0.025 | <0.10 | <0.025 |
| trans-1,2-Dichloroethene | 1,560 | 1850 | 0.0626 | --- | <0.025 | <1.2 | <2.5 | <0.62 | <0.025 | <0.025 | <0.025 | <3.1 | <1.2 | <0.062 | <0.025 | <0.10 | <0.025 |
| Di-isopropyl ether | 2,260 | 2260 | --- | --- | <0.025 | <1.2 | <2.5 | <0.62 | <0.025 | <0.025 | <0.025 | <3.1 | <1.2 | <0.062 | <0.025 | <0.10 | <0.025 |
| Ethylbenzene | 8.03 | 35.4 | 1.57 | --- | <0.025 | **35.5** | **279** | **75.0** | 0.039J | <0.025 | <0.025 | <3.1 | <1.2 | <0.062 | <0.025 | **1.7** | <0.025 |
| Hexachlorobutadiene | 1.63 | 7.49 | --- | --- | <0.025 | <1.2 | <2.5 | <0.62 | <0.025 | <0.025 | <0.025 | <3.1 | <1.2 | <0.062 | <0.025 | <0.10 | <0.025 |
| Isopropylbenzene | --- | --- | --- | --- | <0.025 | 46.1 | 30.8 | 8.0 | 0.073 | <0.025 | 0.071 | <3.1 | <1.2 | 0.15J | <0.025 | 5.4 | <0.025 |
| p-Isopropyltoluene | 162 | 162 | --- | --- | <0.025 | 49.1 | 14.5 | 8.7 | <0.025 | <0.025 | 0.034J | <3.1 | <1.2 | <0.062 | <0.025 | 0.45 | <0.025 |
| 2-Butanone (MEK) | 28,400 | 28,400 | 1.6661 | --- | NA | NA | NA | NA | NA | NA | NA | NA | NA | NA | NA | NA | NA |
| Methylene chloride | 61.8 | 1150 | 0.0026 | --- | <0.025 | <1.2 | <2.5 | <0.62 | <0.025 | <0.025 | <0.025 | <3.1 | <1.2 | <0.062 | <0.025 | <0.10 | <0.025 |
| Naphthalene | 5.52 | 24.1 | 0.6582 | --- | <0.040 | **399** | **25.2J** | **5.5J** | 0.31 | 0.050J | 0.30 | <5.0 | <2.0 | <0.10 | <0.040 | 0.24J | <0.040 |
| n-Propylbenzene | --- | --- | --- | --- | <0.025 | 37.0 | 28.9 | 4.7 | <0.025 | <0.025 | <0.025 | <3.1 | <1.2 | <0.062 | <0.025 | 2.4 | <0.025 |
| Styrene | 867 | 867 | 0.22 | --- | <0.025 | <1.2 | <2.5 | <0.62 | <0.025 | <0.025 | <0.025 | <3.1 | <1.2 | <0.062 | <0.025 | <0.10 | <0.025 |
| Tetrachloroethene | 33 | 145 | 0.0045 | --- | <0.025 | <1.2 | <2.5 | <0.62 | **0.040J** | <0.025 | **0.46** | <3.1 | <1.2 | <0.062 | <0.025 | <0.10 | <0.025 |
| Toluene | 818 | 818 | 1.1072 | --- | <0.025 | **4.7** | **281** | **131** | 0.19 | <0.025 | 0.065J | <3.1 | <1.2 | <0.062 | 0.027J | **35.3** | <0.025 |
| 1,2,3-Trichlorobenzene | 62.6 | 934 | --- | --- | <0.025 | <1.2 | <2.5 | <0.62 | <0.025 | <0.025 | <0.025 | <3.1 | <1.2 | <0.062 | <0.025 | <0.10 | <0.025 |
| 1,2,4-Trichlorobenzene | 24 | 113 | 0.408 | --- | <0.048 | <2.4 | <4.8 | <1.2 | <0.048 | <0.048 | <0.048 | <5.9 | <2.4 | <0.12 | <0.048 | <0.19 | <0.048 |
| 1,1,1-Trichloroethane | 640 | 640 | 0.1402 | --- | <0.025 | <1.2 | <2.5 | <0.62 | **3.4** | 0.13 | **4.4** | **68.2** | **33.1** | **1.2** | <0.025 | <0.10 | <0.025 |
| 1,1,2-Trichloroethane | 1.59 | 7.01 | 0.0032 | --- | <0.025 | <1.2 | <2.5 | <0.62 | <0.025 | <0.025 | <0.025 | <3.1 | <1.2 | <0.062 | <0.025 | <0.10 | <0.025 |
| Trichloroethene | 1.3 | 8.41 | 0.0036 | --- | <0.025 | <1.2 | <2.5 | <0.62 | **0.84** | <0.025 | **8.2** | **582** | **288** | **10.2** | <0.025 | <0.10 | <0.025 |
| Trichlorofluoromethane | 1,230 | 1230 | 4.4758 | --- | <0.025 | <1.2 | <2.5 | <0.62 | <0.025 | <0.025 | <0.025 | <3.1 | <1.2 | <0.062 | <0.025 | <0.10 | <0.025 |
| 1,2,3-Trimethylbenzene | 182 | 182 | --- | --- | NA | NA | NA | NA | NA | NA | NA | NA | NA | NA | NA | NA | NA |
| 1,2,4-Trimethylbenzene | 219 | 219 | --- | --- | 0.045J | 483 | 240 | 42.8 | 0.11 | <0.025 | 0.060J | <3.1 | <1.2 | 0.29 | <0.025 | 3.1 | <0.025 |
| 1,3,5-Trimethylbenzene | 182 | 182 | --- | --- | <0.025 | 221 | 103 | 18.8 | 0.053J | <0.025 | <0.025 | <3.1 | <1.2 | 0.14J | <0.025 | 1.2 | <0.025 |
| Trimethylbenzenes | --- | --- | 1.3821 | --- | <0.045 | **704** | **343** | **61.6** | 0.163 | <0.025 | 0.060 | <3.1 | <1.2 | 0.43 | <0.025 | **4.3** | <0.025 |
| Vinyl Chloride | 0.067 | 2.08 | 0.0001 | --- | <0.025 | <1.2 | <2.5 | <0.62 | <0.025 | <0.025 | <0.025 | <3.1 | <1.2 | <0.062 | <0.025 | <0.10 | <0.025 |
| m&p-Xylene | --- | --- | --- | --- | <0.050 | 317 | 1620 | 415 | 0.21 | <0.050 | 0.084J | <6.2 | <2.5 | 0.31J | <0.050 | 11.0 | <0.050 |
| o-Xylene | --- | --- | --- | --- | <0.025 | 73.7 | 640 | 155 | 0.16 | <0.025 | 0.053J | <3.1 | <1.2 | <0.062 | <0.025 | 3.2 | <0.025 |
| Xylenes | 260 | 260 | 3.96 | --- | <0.050 | **390.7** | **2,260** | **570** | 0.37 | <0.050 | 0.137 | <6.2 | <2.5 | 0.31 | <0.050 | **14.2** | <0.050 |

**Table 1. Soil Analytical Results**

**Former Wayne Pigment Corp, 300 Barclay Street and 139 Oregon Street, Milwaukee, Wisconsin**

| PARAMETERS | Non-Industrial Direct Contact Residual Contaminant Level | Industrial Direct Contact RCL (mg/kg) | Protection of Groundwater Residual Contaminant Level | Background Threshold Value | Sample ID | | | | | | | | | | | | |
|---|---|---|---|---|---|---|---|---|---|---|---|---|---|---|---|---|---|
| | | | | | SB-35 | | SB-36 | | SB-37 | | SB-38 | SB-39 | | SB-40 | SB-42 | SB-42 | SB-43 |
| Date Collected | | | | | 3/7/2016 | | 3/7/2016 | | 3/7/2016 | | 3/7/2016 | 3/7/2016 | | 3/7/2016 | 9/7/2016 | 9/7/2016 | 9/7/2016 |
| Depth (feet bgs) | | | | | 2-4 | 6-8 | 2-4 | 6-8 | 2-4 | 4-6 | 4-6 | 2-4 | 4-6 | 2-4 | 2-4 | 6-8 | 2-4 |
| Saturated(s)/Unsaturated(u) | | | | | u | u | u | u | u | u | u | u | u | u | u | u | u |
| **Metals (mg/kg)** | | | | | | | | | | | | | | | | | |
| Arsenic | 0.677 | 3 | 0.584 | 8.0 | **124** | **2,700** | **7,240** | **36,100** | 7.4 | **39.7** | **14.0** | 6.8 | **23.0** | 5.7 | NA | NA | NA |
| Barium | 15,300 | 100,000 | 164.8 | 364 | NA | NA | NA | NA | NA | NA | NA | NA | NA | NA | NA | NA | NA |
| Cadmium | 71 | 985 | 0.752 | 1.0 | NA | NA | NA | NA | NA | NA | NA | NA | NA | NA | NA | NA | NA |
| Chromium | --- | --- | 360,000 | 44 | 400 | 320 | 1700 | 44 | 14 | NA | NA | 11 | 17 | NA | NA | NA | NA |
| Trivalent Chromium | 100,000 | 100,000 | --- | --- | 390 | 320 | 1700 | 36 | 14 | NA | NA | 11 | 16 | NA | NA | NA | NA |
| Hexavalent Chromium | 0.301 | 6 | --- | --- | 13 | <0.39 | 0.98J | 7.4 | <0.38 | NA | NA | 0.76J | 1.5 | NA | NA | NA | NA |
| Lead | 400 | 800 | 27 | 52 | **106** | **328** | **1,460** | **4,900** | **60.4** | **327** | **79.4** | 45.7 | **968** | **78.5** | NA | NA | NA |
| Mercury | 3.13 | 3.13 | 0.208 | --- | NA | NA | NA | NA | NA | NA | NA | NA | NA | NA | NA | NA | NA |
| Selenium | 391 | 5,840 | 0.52 | --- | NA | NA | NA | NA | NA | NA | NA | NA | NA | NA | NA | NA | NA |
| Silver | 391 | 5,840 | 0.8491 | --- | NA | NA | NA | NA | NA | NA | NA | NA | NA | NA | NA | NA | NA |
| **PAHs (mg/kg)** | | | | | | | | | | | | | | | | | |
| Acenaphthene | 3,590 | 45,200 | --- | --- | NA | NA | NA | NA | NA | NA | NA | NA | NA | NA | NA | NA | NA |
| Acenaphthylene | --- | --- | --- | --- | NA | NA | NA | NA | NA | NA | NA | NA | NA | NA | NA | NA | NA |
| Anthracene | 17,200 | 100,000 | 196.9492 | --- | NA | NA | NA | NA | NA | NA | NA | NA | NA | NA | NA | NA | NA |
| Benzo(a)anthracene | 1.14 | 20.8 | --- | --- | NA | NA | NA | NA | NA | NA | NA | NA | NA | NA | NA | NA | NA |
| Benzo(a)pyrene | 0.115 | 2.11 | 0.470 | --- | NA | NA | NA | NA | NA | NA | NA | NA | NA | NA | NA | NA | NA |
| Benzo(b)fluoranthene | 1.15 | 21.1 | 0.4793 | --- | NA | NA | NA | NA | NA | NA | NA | NA | NA | NA | NA | NA | NA |
| Benzo(g,h,i)perylene | --- | --- | --- | --- | NA | NA | NA | NA | NA | NA | NA | NA | NA | NA | NA | NA | NA |
| Benzo(k)fluoranthene | 11.5 | 211 | --- | --- | NA | NA | NA | NA | NA | NA | NA | NA | NA | NA | NA | NA | NA |
| Chrysene | 115 | 2,110 | 0.1446 | --- | NA | NA | NA | NA | NA | NA | NA | NA | NA | NA | NA | NA | NA |
| Dibenzo(a,h)anthracene | 0.115 | 2.11 | --- | --- | NA | NA | NA | NA | NA | NA | NA | NA | NA | NA | NA | NA | NA |
| Fluoranthene | 2,390 | 30,100 | 88.8778 | --- | NA | NA | NA | NA | NA | NA | NA | NA | NA | NA | NA | NA | NA |
| Fluorene | 2,390 | 30,100 | 14.8299 | --- | NA | NA | NA | NA | NA | NA | NA | NA | NA | NA | NA | NA | NA |
| Indeno(1,2,3-cd)pyrene | 1.15 | 21.1 | --- | --- | NA | NA | NA | NA | NA | NA | NA | NA | NA | NA | NA | NA | NA |
| 1-methyl naphthalene | 17.6 | 72.7 | --- | --- | NA | NA | NA | NA | NA | NA | NA | NA | NA | NA | NA | NA | NA |
| 2-methyl naphthalene | 239 | 3,010 | --- | --- | NA | NA | NA | NA | NA | NA | NA | NA | NA | NA | NA | NA | NA |
| Naphthalene | 5.52 | 24.1 | 0.6582 | --- | NA | NA | NA | NA | NA | NA | NA | NA | NA | NA | NA | NA | NA |
| Phenanthrene | --- | --- | --- | --- | NA | NA | NA | NA | NA | NA | NA | NA | NA | NA | NA | NA | NA |
| Pyrene | 1,790 | 22,600 | 54.5455 | --- | NA | NA | NA | NA | NA | NA | NA | NA | NA | NA | NA | NA | NA |
| Total Dectected PAHs | --- | --- | --- | --- | NA | NA | NA | NA | NA | NA | NA | NA | NA | NA | NA | NA | NA |

Bold values exceed protection of groundwater residual contaminant level
Boxed values exceed non-industrial direct contact residual contaminant level
Underlined values exceeded the background threshold value
Metals that exceed the background threshold values are compared to residual contaminant levels
--- - no standard established
B - Compound was found in the blank and sample
F1 - matrix spike and/or matrix spike duplicate recovery is outside acceptance limits
F2 - matrix spike/matrix spike duplicate relative percent difference exceeds control limits

J - Results between laboratory limit of detection and limit of quanitification
bgs - below ground surface
NA - not analyzed or not available
ND - not detected
mg/kg - milligrams per kilogram
PAHs - polynuclear aromatic hydrocarbons
TCLP - toxicity characteristic leaching procedure
VOCs - volatile organic compounds

**Table 1. Soil Analytical Results**

**Former Wayne Pigment Corp, 300 Barclay Street and 139 Oregon Street, Milwaukee, Wisconsin**

| PARAMETERS | Non-Industrial Direct Contact Residual Contaminant Level | Industrial Direct Contact RCL (mg/kg) | Protection of Groundwater Residual Contaminant Level | Background Threshold Value | Sample ID | | | | | | | | | | | | |
|---|---|---|---|---|---|---|---|---|---|---|---|---|---|---|---|---|---|
| | | | | | SB-43 | SB-44 | | SB-45 | | SB-46 | | SB-47 | | SB-48 | | SB-49 | |
| Date Collected | | | | | 9/7/2016 | 9/7/2016 | 9/7/2016 | 9/7/2016 | 9/7/2016 | 9/7/2016 | 9/7/2016 | 9/7/2016 | 9/7/2016 | 9/19/2016 | 9/19/2016 | 9/19/2016 | 9/19/2016 |
| Depth (feet bgs) | | | | | 8-10 | 2-4 | 6-8 | 2-4 | 8-10 | 2-4 | 12-15 | 2-4 | 12-15 | 2-4 | 4-6 | 2-4 | 8-10 |
| Saturated(s)/Unsaturated(u) | | | | | s | u | u | u | s | u | s | u | s | u | s | u | s |
| **VOCs (mg/kg)** | | | | | | | | | | | | | | | | | |
| Benzene | 1.6 | 7.07 | 0.0051 | --- | <0.025 | <0.025 | <0.025 | <0.025 | <0.025 | <0.025 | <0.025 | <0.025 | <5.0 | <0.20 | <0.050 | <0.50 | <0.025 |
| Bromobenzene | 342 | 679 | --- | --- | <0.025 | <0.025 | <0.025 | <0.025 | <0.025 | <0.025 | <0.025 | <0.025 | <5.0 | <0.20 | <0.050 | <0.50 | <0.025 |
| Bromomethane | 9.6 | 43 | 0.0051 | --- | <0.070 | <0.070 | <0.070 | <0.070 | <0.070 | <0.070 | <0.070 | <0.070 | <14.0 | <0.56 | <0.14 | <1.4 | <0.070 |
| n-Butylbenzene | 108 | 108 | --- | --- | <0.025 | <0.025 | <0.025 | <0.025 | <0.025 | <0.025 | <0.025 | <0.025 | <5.0 | <0.20 | <0.050 | <0.50 | <0.025 |
| sec-Butylbenzene | 145 | 145 | --- | --- | <0.025 | <0.025 | <0.025 | <0.025 | <0.025 | <0.025 | <0.025 | <0.025 | <5.0 | <0.20 | <0.050 | <0.50 | <0.025 |
| tert-Butylbenzene | 183 | 183 | --- | --- | <0.025 | <0.025 | <0.025 | <0.025 | <0.025 | <0.025 | <0.025 | <0.025 | <5.0 | <0.20 | <0.050 | <0.50 | <0.025 |
| Chlorobenzene | 370 | 761 | --- | --- | <0.025 | <0.025 | <0.025 | <0.025 | <0.025 | <0.025 | <0.025 | <0.025 | <5.0 | <0.20 | <0.050 | <0.50 | <0.025 |
| Chloroethane | --- | --- | 0.2266 | --- | <0.067 | <0.067 | <0.067 | <0.067 | <0.067 | <0.067 | <0.067 | <0.067 | <13.4 | <0.54 | <0.13 | <1.3 | <0.067 |
| Chloroform | 0.454 | 1.98 | 0.0033 | --- | <0.046 | <0.046 | <0.046 | <0.046 | <0.046 | <0.046 | <0.046 | <0.046 | <9.3 | <0.37 | <0.093 | <0.93 | <0.046 |
| 1,1-Dichloroethane | 5.06 | 22.2 | 0.4828 | --- | <0.025 | <0.025 | <0.025 | <0.025 | <0.025 | <0.025 | <0.025 | <0.025 | <5.0 | <0.20 | 0.45 | <0.50 | **0.64** |
| 1,2-Dichloroethane | 0.652 | 2.87 | 0.0028 | --- | <0.025 | <0.025 | <0.025 | <0.025 | <0.025 | <0.025 | <0.025 | <0.025 | <5.0 | <0.20 | <0.050 | <0.50 | <0.025 |
| 1,1-Dichloroethene | 320 | 1,190 | 0.005 | --- | <0.025 | <0.025 | <0.025 | <0.025 | <0.025 | <0.025 | <0.025 | <0.025 | <5.0 | <0.20 | <0.050 | <0.50 | <0.025 |
| cis-1,2-Dichloroethene | 156 | 2340 | 0.0412 | --- | <0.025 | <0.025 | <0.025 | <0.025 | <0.025 | <0.025 | <0.025 | <0.025 | <5.0 | <0.20 | <0.050 | **0.69J** | **2.7** |
| trans-1,2-Dichloroethene | 1,560 | 1850 | 0.0626 | --- | <0.025 | <0.025 | <0.025 | <0.025 | <0.025 | <0.025 | <0.025 | <0.025 | <5.0 | <0.20 | <0.050 | <0.50 | **1.4** |
| Di-isopropyl ether | 2,260 | 2260 | --- | --- | <0.025 | <0.025 | <0.025 | <0.025 | <0.025 | <0.025 | <0.025 | <0.025 | <5.0 | <0.20 | <0.050 | <0.50 | <0.025 |
| Ethylbenzene | 8.03 | 35.4 | 1.57 | --- | 0.38 | <0.025 | 0.16 | <0.025 | 0.057J | <0.025 | <0.025 | <0.025 | <5.0 | <0.20 | <0.050 | <0.50 | 0.073J |
| Hexachlorobutadiene | 1.63 | 7.49 | --- | --- | <0.025 | <0.025 | <0.025 | <0.025 | <0.025 | <0.025 | <0.025 | <0.025 | <5.0 | <0.20 | <0.050 | <0.50 | <0.025 |
| Isopropylbenzene | --- | --- | --- | --- | 0.033J | <0.025 | <0.025 | <0.025 | 0.048J | <0.025 | <0.025 | <0.025 | <5.0 | <0.20 | <0.050 | <0.50 | <0.025 |
| p-Isopropyltoluene | 162 | 162 | --- | --- | 0.056J | <0.025 | 0.046J | <0.025 | <0.025 | <0.025 | <0.025 | <0.025 | <5.0 | <0.20 | <0.050 | <0.50 | <0.025 |
| 2-Butanone (MEK) | 28,400 | 28,400 | 1.6661 | --- | NA | NA | NA | NA | NA | NA | NA | NA | NA | NA | NA | NA | NA |
| Methylene chloride | 61.8 | 1150 | 0.0026 | --- | <0.025 | <0.025 | <0.025 | <0.025 | <0.025 | <0.025 | <0.025 | <0.025 | <5.0 | <0.20 | <0.050 | <0.050 | <0.025 |
| Naphthalene | 5.52 | 24.1 | 0.6582 | --- | <0.040 | <0.040 | <0.040 | <0.040 | <0.040 | <0.040 | <0.040 | <0.040 | <8.0 | 0.48J | 0.22J | **0.96J** | 0.064J |
| n-Propylbenzene | --- | --- | --- | --- | <0.025 | <0.025 | <0.025 | <0.025 | <0.025 | <0.025 | <0.025 | <0.025 | <5.0 | <0.20 | <0.050 | <0.50 | <0.025 |
| Styrene | 867 | 867 | 0.22 | --- | <0.025 | <0.025 | <0.025 | <0.025 | <0.025 | <0.025 | <0.025 | <0.025 | <5.0 | <0.20 | <0.050 | <0.50 | <0.025 |
| Tetrachloroethene | 33 | 145 | 0.0045 | --- | <0.025 | <0.025 | <0.025 | <0.025 | <0.025 | <0.025 | <0.025 | <0.025 | <5.0 | <0.20 | <0.050 | <0.50 | <0.025 |
| Toluene | 818 | 818 | 1.1072 | --- | 0.13 | <0.025 | 0.048J | <0.025 | <0.025 | <0.025 | <0.025 | <0.025 | **24.4** | <0.20 | 0.067J | <0.50 | 0.067J |
| 1,2,3-Trichlorobenzene | 62.6 | 934 | --- | --- | <0.025 | <0.025 | <0.025 | <0.025 | <0.025 | <0.025 | <0.025 | <0.025 | <5.0 | <0.20 | <0.050 | <0.50 | <0.025 |
| 1,2,4-Trichlorobenzene | 24 | 113 | 0.408 | --- | <0.048 | <0.048 | <0.048 | <0.048 | <0.048 | <0.048 | <0.048 | <0.048 | <9.5 | <0.38 | <0.095 | <0.95 | <0.048 |
| 1,1,1-Trichloroethane | 640 | 640 | 0.1402 | --- | <0.025 | <0.025 | <0.025 | <0.025 | <0.025 | <0.025 | <0.025 | <0.025 | <5.0 | **4.5** | **18.0** | **4.0** | **0.27** |
| 1,1,2-Trichloroethane | 1.59 | 7.01 | 0.0032 | --- | <0.025 | <0.025 | <0.025 | <0.025 | <0.025 | <0.025 | <0.025 | <0.025 | <5.0 | <0.20 | <0.050 | <0.50 | <0.025 |
| Trichloroethene | 1.3 | 8.41 | 0.0036 | --- | <0.025 | **0.035J** | <0.025 | <0.025 | <0.025 | **0.045J** | <0.025 | <0.025 | <5.0 | **49.2** | **9.7** | **122** | **9.8** |
| Trichlorofluoromethane | 1,230 | 1230 | 4.4758 | --- | <0.025 | <0.025 | <0.025 | <0.025 | <0.025 | <0.025 | <0.025 | <0.025 | <5.0 | <0.20 | <0.050 | <0.50 | <0.025 |
| 1,2,3-Trimethylbenzene | 182 | 182 | --- | --- | NA | NA | NA | NA | NA | NA | NA | NA | NA | NA | NA | NA | NA |
| 1,2,4-Trimethylbenzene | 219 | 219 | --- | --- | <0.025 | <0.025 | <0.025 | <0.025 | 0.090 | <0.025 | <0.025 | <0.025 | <5.0 | <0.20 | 0.066J | <0.50 | <0.025 |
| 1,3,5-Trimethylbenzene | 182 | 182 | --- | --- | <0.025 | <0.025 | <0.025 | <0.025 | <0.025 | <0.025 | <0.025 | <0.025 | <5.0 | <0.20 | <0.050 | <0.50 | <0.025 |
| Trimethylbenzenes | --- | --- | 1.3821 | --- | <0.025 | <0.025 | <0.025 | <0.025 | 0.09 | <0.025 | <0.025 | <0.025 | <5.0 | <0.20 | 0.066 | <0.50 | <0.025 |
| Vinyl Chloride | 0.067 | 2.08 | 0.0001 | --- | <0.025 | <0.025 | <0.025 | <0.025 | <0.025 | <0.025 | <0.025 | <0.025 | <5.0 | <0.20 | <0.050 | <0.50 | **4.1** |
| m&p-Xylene | --- | --- | --- | --- | 0.87 | <0.050 | 0.57 | <0.050 | 0.30 | <0.050 | <0.050 | <0.050 | 12.5J | <0.40 | <0.10 | <1.0 | 0.15J |
| o-Xylene | --- | --- | --- | --- | 0.11 | <0.025 | 0.18 | <0.025 | 0.10 | <0.025 | <0.025 | <0.025 | <5.0 | <0.20 | 0.072J | <0.50 | 0.062J |
| Xylenes | 260 | 260 | 3.96 | --- | 0.98 | <0.050 | 0.75 | <0.050 | 0.40 | <0.050 | <0.050 | <0.050 | **12.5** | <0.40 | 0.072 | <1.0 | 0.212 |

**Table 1. Soil Analytical Results**

**Former Wayne Pigment Corp, 300 Barclay Street and 139 Oregon Street, Milwaukee, Wisconsin**

| PARAMETERS | Non-Industrial Direct Contact Residual Contaminant Level | Industrial Direct Contact RCL (mg/kg) | Protection of Groundwater Residual Contaminant Level | Background Threshold Value | Sample ID | | | | | | | | | | | | |
|---|---|---|---|---|---|---|---|---|---|---|---|---|---|---|---|---|---|
| | | | | | SB-43 | SB-44 | | SB-45 | | SB-46 | | SB-47 | | SB-48 | | SB-49 | |
| Date Collected | | | | | 9/7/2016 | 9/7/2016 | 9/7/2016 | 9/7/2016 | 9/7/2016 | 9/7/2016 | 9/7/2016 | 9/7/2016 | 9/7/2016 | 9/19/2016 | 9/19/2016 | 9/19/2016 | 9/19/2016 |
| Depth (feet bgs) | | | | | 8-10 | 2-4 | 6-8 | 2-4 | 8-10 | 2-4 | 12-15 | 2-4 | 12-15 | 2-4 | 4-6 | 2-4 | 8-10 |
| Saturated(s)/Unsaturated(u) | | | | | s | u | u | u | s | u | s | u | s | u | s | u | s |
| **Metals (mg/kg)** | | | | | | | | | | | | | | | | | |
| Arsenic | 0.677 | 3 | 0.584 | 8.0 | NA | NA | NA | NA | NA | NA | NA | NA | NA | NA | NA | NA | NA |
| Barium | 15,300 | 100,000 | 164.8 | 364 | NA | NA | NA | NA | NA | NA | NA | NA | NA | NA | NA | NA | NA |
| Cadmium | 71 | 985 | 0.752 | 1.0 | NA | NA | NA | NA | NA | NA | NA | NA | NA | NA | NA | NA | NA |
| Chromium | --- | --- | 360,000 | 44 | NA | NA | NA | NA | NA | NA | NA | NA | NA | NA | NA | NA | NA |
| Trivalent Chromium | 100,000 | 100,000 | --- | --- | NA | NA | NA | NA | NA | NA | NA | NA | NA | NA | NA | NA | NA |
| Hexavalent Chromium | 0.301 | 6 | --- | --- | NA | NA | NA | NA | NA | NA | NA | NA | NA | NA | NA | NA | NA |
| Lead | 400 | 800 | 27 | 52 | NA | NA | NA | NA | NA | NA | NA | NA | NA | NA | NA | NA | NA |
| Mercury | 3.13 | 3.13 | 0.208 | --- | NA | NA | NA | NA | NA | NA | NA | NA | NA | NA | NA | NA | NA |
| Selenium | 391 | 5,840 | 0.52 | --- | NA | NA | NA | NA | NA | NA | NA | NA | NA | NA | NA | NA | NA |
| Silver | 391 | 5,840 | 0.8491 | --- | NA | NA | NA | NA | NA | NA | NA | NA | NA | NA | NA | NA | NA |
| **PAHs (mg/kg)** | | | | | | | | | | | | | | | | | |
| Acenaphthene | 3,590 | 45,200 | --- | --- | NA | NA | NA | NA | NA | NA | NA | NA | NA | NA | NA | NA | NA |
| Acenaphthylene | --- | --- | --- | --- | NA | NA | NA | NA | NA | NA | NA | NA | NA | NA | NA | NA | NA |
| Anthracene | 17,200 | 100,000 | 196.9492 | --- | NA | NA | NA | NA | NA | NA | NA | NA | NA | NA | NA | NA | NA |
| Benzo(a)anthracene | 1.14 | 20.8 | --- | --- | NA | NA | NA | NA | NA | NA | NA | NA | NA | NA | NA | NA | NA |
| Benzo(a)pyrene | 0.115 | 2.11 | 0.470 | --- | NA | NA | NA | NA | NA | NA | NA | NA | NA | NA | NA | NA | NA |
| Benzo(b)fluoranthene | 1.15 | 21.1 | 0.4793 | --- | NA | NA | NA | NA | NA | NA | NA | NA | NA | NA | NA | NA | NA |
| Benzo(g,h,i)perylene | --- | --- | --- | --- | NA | NA | NA | NA | NA | NA | NA | NA | NA | NA | NA | NA | NA |
| Benzo(k)fluoranthene | 11.5 | 211 | --- | --- | NA | NA | NA | NA | NA | NA | NA | NA | NA | NA | NA | NA | NA |
| Chrysene | 115 | 2,110 | 0.1446 | --- | NA | NA | NA | NA | NA | NA | NA | NA | NA | NA | NA | NA | NA |
| Dibenzo(a,h)anthracene | 0.115 | 2.11 | --- | --- | NA | NA | NA | NA | NA | NA | NA | NA | NA | NA | NA | NA | NA |
| Fluoranthene | 2,390 | 30,100 | 88.8778 | --- | NA | NA | NA | NA | NA | NA | NA | NA | NA | NA | NA | NA | NA |
| Fluorene | 2,390 | 30,100 | 14.8299 | --- | NA | NA | NA | NA | NA | NA | NA | NA | NA | NA | NA | NA | NA |
| Indeno(1,2,3-cd)pyrene | 1.15 | 21.1 | --- | --- | NA | NA | NA | NA | NA | NA | NA | NA | NA | NA | NA | NA | NA |
| 1-methyl naphthalene | 17.6 | 72.7 | --- | --- | NA | NA | NA | NA | NA | NA | NA | NA | NA | NA | NA | NA | NA |
| 2-methyl naphthalene | 239 | 3,010 | --- | --- | NA | NA | NA | NA | NA | NA | NA | NA | NA | NA | NA | NA | NA |
| Naphthalene | 5.52 | 24.1 | 0.6582 | --- | NA | NA | NA | NA | NA | NA | NA | NA | NA | NA | NA | NA | NA |
| Phenanthrene | --- | --- | --- | --- | NA | NA | NA | NA | NA | NA | NA | NA | NA | NA | NA | NA | NA |
| Pyrene | 1,790 | 22,600 | 54.5455 | --- | NA | NA | NA | NA | NA | NA | NA | NA | NA | NA | NA | NA | NA |
| Total Dectected PAHs | --- | --- | --- | --- | NA | NA | NA | NA | NA | NA | NA | NA | NA | NA | NA | NA | NA |

Bold values exceed protection of groundwater residual contaminant level
Boxed values exceed non-industrial direct contact residual contaminant level
Underlined values exceeded the background threshold value
Metals that exceed the background threshold values are compared to residual contaminant levels
--- - no standard established
B - Compound was found in the blank and sample
F1 - matrix spike and/or matrix spike duplicate recovery is outside acceptance limits
F2 - matrix spike/matrix spike duplicate relative percent difference exceeds control limits

J - Results between laboratory limit of detection and limit of quanitification
bgs - below ground surface
NA - not analyzed or not available
ND - not detected
mg/kg - milligrams per kilogram
PAHs - polynuclear aromatic hydrocarbons
TCLP - toxicity characteristic leaching procedure
VOCs - volatile organic compounds

**Table 1. Soil Analytical Results**

**Former Wayne Pigment Corp, 300 Barclay Street and 139 Oregon Street, Milwaukee, Wisconsin**

| PARAMETERS | Non-Industrial Direct Contact Residual Contaminant Level | Industrial Direct Contact RCL (mg/kg) | Protection of Groundwater Residual Contaminant Level | Background Threshold Value | Sample ID | | | | | | | | | | | | |
|---|---|---|---|---|---|---|---|---|---|---|---|---|---|---|---|---|---|
| | | | | | SB-50 | | SB-51 | | SB-52 | | SB-53 | | SB-54 | | SB-55 | | SB-56 |
| Date Collected | | | | | 9/19/2016 | 9/19/2016 | 9/19/2016 | 9/19/2016 | 9/19/2016 | 9/19/2016 | 9/13/2016 | 4/6/2016 | 9/13/2016 | 9/13/2016 | 9/13/2016 | 9/13/2016 | 9/13/2016 |
| Depth (feet bgs) | | | | | 2-4 | 8-10 | 2-4 | 8-10 | 2-4 | 8-10 | 0-2 | 4-6 | 2-4 | 4-6 | 0-2 | 8-10 | 0-2 |
| Saturated(s)/Unsaturated(u) | | | | | u | s | u | s | u | s | u | u | u | u | u | s | u |
| **VOCs (mg/kg)** | | | | | | | | | | | | | | | | | |
| Benzene | 1.6 | 7.07 | 0.0051 | --- | <0.025 | <0.20 | **0.087** | <0.025 | <0.025 | <0.050 | <0.025 | <0.025 | <0.025 | <0.025 | <0.025 | <0.025 | <0.025 |
| Bromobenzene | 342 | 679 | --- | --- | <0.025 | <0.20 | <0.028 | <0.025 | <0.025 | <0.050 | <0.025 | <0.025 | <0.025 | <0.025 | <0.025 | <0.025 | <0.025 |
| Bromomethane | 9.6 | 43 | 0.0051 | --- | <0.070 | <0.56 | <0.078 | <0.070 | <0.071 | <0.14 | <0.070 | <0.070 | <0.070 | <0.070 | <0.070 | <0.070 | <0.070 |
| n-Butylbenzene | 108 | 108 | --- | --- | <0.025 | 8.8 | 0.065J | <0.025 | <0.025 | 1.9 | <0.025 | <0.025 | <0.025 | <0.025 | <0.025 | <0.025 | 1.2 |
| sec-Butylbenzene | 145 | 145 | --- | --- | <0.025 | 11.5 | 0.041J | <0.025 | <0.025 | 2.6 | <0.025 | <0.025 | <0.025 | <0.025 | <0.025 | <0.025 | 0.62 |
| tert-Butylbenzene | 183 | 183 | --- | --- | <0.025 | <0.20 | <0.028 | <0.025 | <0.025 | <0.050 | <0.025 | <0.025 | <0.025 | <0.025 | <0.025 | <0.025 | 0.15 |
| Chlorobenzene | 370 | 761 | --- | --- | <0.025 | <0.20 | <0.028 | <0.025 | <0.025 | <0.050 | <0.025 | <0.025 | <0.025 | <0.025 | <0.025 | <0.025 | <0.025 |
| Chloroethane | --- | --- | 0.2266 | --- | <0.067 | <0.54 | <0.074 | <0.067 | <0.068 | <0.13 | <0.067 | <0.067 | <0.067 | <0.067 | <0.067 | <0.067 | <0.067 |
| Chloroform | 0.454 | 1.98 | 0.0033 | --- | <0.046 | <0.37 | <0.052 | <0.046 | <0.047 | <0.093 | <0.046 | <0.046 | <0.046 | <0.046 | <0.046 | <0.046 | <0.046 |
| 1,1-Dichloroethane | 5.06 | 22.2 | 0.4828 | --- | <0.025 | <0.20 | <0.028 | 0.22 | <0.025 | <0.050 | <0.025 | <0.025 | <0.025 | <0.025 | <0.025 | <0.025 | <0.025 |
| 1,2-Dichloroethane | 0.652 | 2.87 | 0.0028 | --- | <0.025 | <0.20 | <0.028 | <0.025 | <0.025 | <0.050 | <0.025 | <0.025 | <0.025 | <0.025 | <0.025 | <0.025 | <0.025 |
| 1,1-Dichloroethene | 320 | 1,190 | 0.005 | --- | <0.025 | <0.20 | <0.028 | <0.025 | <0.025 | <0.050 | <0.025 | <0.025 | <0.025 | <0.025 | <0.025 | <0.025 | <0.025 |
| cis-1,2-Dichloroethene | 156 | 2340 | 0.0412 | --- | 0.036J | <0.20 | <0.028 | <0.025 | <0.025 | <0.050 | <0.025 | <0.025 | <0.025 | <0.025 | <0.025 | <0.025 | <0.025 |
| trans-1,2-Dichloroethene | 1,560 | 1850 | 0.0626 | --- | <0.025 | <0.20 | <0.028 | <0.025 | <0.025 | <0.050 | <0.025 | <0.025 | <0.025 | <0.025 | <0.025 | <0.025 | <0.025 |
| Di-isopropyl ether | 2,260 | 2260 | --- | --- | <0.025 | <0.20 | <0.028 | <0.025 | <0.025 | <0.050 | <0.025 | <0.025 | <0.025 | <0.025 | <0.025 | <0.025 | <0.025 |
| Ethylbenzene | 8.03 | 35.4 | 1.57 | --- | <0.025 | <0.20 | 0.20 | <0.025 | <0.025 | <0.050 | <0.025 | <0.025 | **8.3** | 0.035J | <0.025 | <0.025 | 0.77 |
| Hexachlorobutadiene | 1.63 | 7.49 | --- | --- | <0.025 | <0.20 | <0.028 | <0.025 | <0.025 | <0.050 | <0.025 | <0.025 | <0.025 | <0.025 | <0.025 | <0.025 | <0.025 |
| Isopropylbenzene | --- | --- | --- | --- | <0.025 | 7.9 | 0.090 | <0.025 | <0.025 | 1.8 | <0.025 | <0.025 | 0.81 | 0.065J | <0.025 | <0.025 | 6.0 |
| p-Isopropyltoluene | 162 | 162 | --- | --- | <0.025 | <0.20 | 0.042J | <0.025 | <0.025 | <0.050 | <0.025 | <0.025 | <0.025 | <0.025 | <0.025 | <0.025 | 0.77 |
| 2-Butanone (MEK) | 28,400 | 28,400 | 1.6661 | --- | NA | NA | NA | NA | NA | NA | NA | NA | NA | NA | NA | NA | NA |
| Methylene chloride | 61.8 | 1150 | 0.0026 | --- | <0.025 | <0.20 | <0.028 | <0.025 | <0.025 | <0.050 | <0.025 | <0.025 | <0.025 | <0.025 | <0.025 | <0.025 | <0.025 |
| Naphthalene | 5.52 | 24.1 | 0.6582 | --- | 0.45 | 0.59J | **1.1** | <0.040 | 0.18J | 0.20J | 0.062J | <0.040 | 0.076J | <0.040 | 0.052J | 0.11J | **0.67** |
| n-Propylbenzene | --- | --- | --- | --- | <0.025 | 15.8 | 0.13 | <0.025 | <0.025 | 3.3 | <0.025 | <0.025 | 0.31 | <0.025 | <0.025 | <0.025 | 0.90 |
| Styrene | 867 | 867 | 0.22 | --- | <0.025 | <0.20 | <0.028 | <0.025 | <0.025 | <0.050 | <0.025 | <0.025 | <0.025 | <0.025 | <0.025 | <0.025 | <0.025 |
| Tetrachloroethene | 33 | 145 | 0.0045 | --- | **0.038J** | <0.20 | **0.036J** | <0.025 | <0.025 | <0.050 | <0.025 | <0.025 | <0.025 | <0.025 | <0.025 | <0.025 | <0.025 |
| Toluene | 818 | 818 | 1.1072 | --- | 0.046J | <0.20 | 1.0 | <0.025 | 0.13 | <0.050 | <0.025 | <0.025 | <0.025 | <0.025 | <0.025 | <0.025 | <0.025 |
| 1,2,3-Trichlorobenzene | 62.6 | 934 | --- | --- | <0.025 | <0.20 | <0.028 | <0.025 | <0.025 | <0.050 | <0.025 | <0.025 | <0.025 | <0.025 | <0.025 | <0.025 | <0.025 |
| 1,2,4-Trichlorobenzene | 24 | 113 | 0.408 | --- | <0.048 | <0.38 | <0.053 | <0.048 | <0.048 | <0.095 | <0.048 | <0.048 | <0.048 | <0.048 | <0.048 | <0.048 | <0.048 |
| 1,1,1-Trichloroethane | 640 | 640 | 0.1402 | --- | **0.18** | <0.20 | **0.29** | <0.025 | <0.025 | <0.050 | <0.025 | <0.025 | <0.025 | <0.025 | <0.025 | <0.025 | <0.025 |
| 1,1,2-Trichloroethane | 1.59 | 7.01 | 0.0032 | --- | <0.025 | <0.20 | <0.028 | <0.025 | <0.025 | <0.050 | <0.025 | <0.025 | <0.025 | <0.025 | <0.025 | <0.025 | <0.025 |
| Trichloroethene | 1.3 | 8.41 | 0.0036 | --- | **4.7** | <0.20 | **10.4** | <0.025 | **0.79** | <0.050 | <0.025 | <0.025 | <0.025 | <0.025 | <0.025 | <0.025 | <0.025 |
| Trichlorofluoromethane | 1,230 | 1230 | 4.4758 | --- | <0.025 | <0.20 | <0.028 | <0.025 | <0.025 | <0.050 | <0.025 | <0.025 | <0.025 | <0.025 | <0.025 | <0.025 | <0.025 |
| 1,2,3-Trimethylbenzene | 182 | 182 | --- | --- | NA | NA | NA | NA | NA | NA | NA | NA | NA | NA | NA | NA | NA |
| 1,2,4-Trimethylbenzene | 219 | 219 | --- | --- | <0.025 | 1.6 | 0.70 | <0.025 | 0.058J | 1.2 | <0.025 | <0.025 | 0.13 | <0.025 | <0.025 | <0.025 | 5.5 |
| 1,3,5-Trimethylbenzene | 182 | 182 | --- | --- | <0.025 | <0.20 | 0.18 | <0.025 | <0.025 | <0.050 | <0.025 | <0.025 | 0.081 | <0.025 | <0.025 | <0.025 | 1.6 |
| Trimethylbenzenes | --- | --- | 1.3821 | --- | <0.025 | **1.6** | 0.88 | <0.025 | 0.058 | 1.2 | <0.025 | <0.025 | 0.211 | <0.025 | <0.025 | <0.025 | **7.1** |
| Vinyl Chloride | 0.067 | 2.08 | 0.0001 | --- | <0.025 | <0.20 | <0.028 | <0.025 | <0.025 | <0.050 | <0.025 | <0.025 | <0.025 | <0.025 | <0.025 | <0.025 | <0.025 |
| m&p-Xylene | --- | --- | --- | --- | <0.050 | <0.40 | 1.8 | <0.050 | 0.14J | <0.10 | 0.085J | <0.050 | 10.9 | 0.076J | <0.050 | <0.050 | 3.2 |
| o-Xylene | --- | --- | --- | --- | 0.036J | <0.20 | 0.98 | <0.025 | 0.075J | <0.050 | <0.025 | <0.025 | 0.76 | <0.026 | <0.025 | <0.025 | 1.0 |
| Xylenes | 260 | 260 | 3.96 | --- | 0.036 | <0.40 | 2.78 | <0.50 | 0.215 | <0.10 | 0.085 | <0.050 | **11.66** | 0.076 | <0.050 | <0.050 | **4.2** |

**Table 1. Soil Analytical Results**

**Former Wayne Pigment Corp, 300 Barclay Street and 139 Oregon Street, Milwaukee, Wisconsin**

| PARAMETERS | Non-Industrial Direct Contact Residual Contaminant Level | Industrial Direct Contact RCL (mg/kg) | Protection of Groundwater Residual Contaminant Level | Background Threshold Value | Sample ID | | | | | | | | | | | | |
|---|---|---|---|---|---|---|---|---|---|---|---|---|---|---|---|---|---|
| | | | | | SB-50 | | SB-51 | | SB-52 | | SB-53 | | SB-54 | | SB-55 | | SB-56 |
| Date Collected | | | | | 9/19/2016 | 9/19/2016 | 9/19/2016 | 9/19/2016 | 9/19/2016 | 9/19/2016 | 9/13/2016 | 4/6/2016 | 9/13/2016 | 9/13/2016 | 9/13/2016 | 9/13/2016 | 9/13/2016 |
| Depth (feet bgs) | | | | | 2-4 | 8-10 | 2-4 | 8-10 | 2-4 | 8-10 | 0-2 | 4-6 | 2-4 | 4-6 | 0-2 | 8-10 | 0-2 |
| Saturated(s)/Unsaturated(u) | | | | | u | s | u | s | u | s | u | u | u | u | u | s | u |
| **Metals (mg/kg)** | | | | | | | | | | | | | | | | | |
| Arsenic | 0.677 | 3 | 0.584 | 8.0 | NA | NA | NA | NA | NA | NA | 4.4 | **9.7** | **11.0** | 4.2 | **24.9** | 6.8 | **21.8** |
| Barium | 15,300 | 100,000 | 164.8 | 364 | NA | NA | NA | NA | NA | NA | 24.6 | 60.2 | 75.4 | 53.5 | 73.1 | 81.7 | 62.8 |
| Cadmium | 71 | 985 | 0.752 | 1.0 | NA | NA | NA | NA | NA | NA | <0.071 | 0.29J | <0.069 | <0.070 | <0.083 | <0.17 | <0.075 |
| Chromium | --- | --- | 360,000 | 44 | NA | NA | NA | NA | NA | NA | NA | NA | 43 | 22 | 110 | 24 | 24 |
| Trivalent Chromium | 100,000 | 100,000 | --- | --- | NA | NA | NA | NA | NA | NA | NA | NA | 43 | 22 | 110 | <0.24 | 24 |
| Hexavalent Chromium | 0.301 | 6 | --- | --- | NA | NA | NA | NA | NA | NA | NA | NA | <0.41 | <0.41 | <0.37 | 29 | 0.47J |
| Lead | 400 | 800 | 27 | 52 | NA | NA | NA | NA | NA | NA | 42.6 | **82.3** | **487** | 8.6 | **512** | 17.3 | **168** |
| Mercury | 3.13 | 3.13 | 0.208 | --- | NA | NA | NA | NA | NA | NA | <0.042 | **0.34** | **0.30** | <0.040 | 0.047J | <0.099 | 0.063J |
| Selenium | 391 | 5,840 | 0.52 | --- | NA | NA | NA | NA | NA | NA | <0.83 | <0.89 | <0.81 | <0.82 | <0.97 | <1.9 | <0.87 |
| Silver | 391 | 5,840 | 0.8491 | --- | NA | NA | NA | NA | NA | NA | <0.30 | 0.43J | <0.29 | <0.30 | <0.35 | <0.70 | <0.31 |
| **PAHs (mg/kg)** | | | | | | | | | | | | | | | | | |
| Acenaphthene | 3,590 | 45,200 | --- | --- | NA | NA | NA | NA | NA | NA | NA | NA | NA | NA | NA | NA | NA |
| Acenaphthylene | --- | --- | --- | --- | NA | NA | NA | NA | NA | NA | NA | NA | NA | NA | NA | NA | NA |
| Anthracene | 17,200 | 100,000 | 196.9492 | --- | NA | NA | NA | NA | NA | NA | NA | NA | NA | NA | NA | NA | NA |
| Benzo(a)anthracene | 1.14 | 20.8 | --- | --- | NA | NA | NA | NA | NA | NA | NA | NA | NA | NA | NA | NA | NA |
| Benzo(a)pyrene | 0.115 | 2.11 | 0.470 | --- | NA | NA | NA | NA | NA | NA | NA | NA | NA | NA | NA | NA | NA |
| Benzo(b)fluoranthene | 1.15 | 21.1 | 0.4793 | --- | NA | NA | NA | NA | NA | NA | NA | NA | NA | NA | NA | NA | NA |
| Benzo(g,h,i)perylene | --- | --- | --- | --- | NA | NA | NA | NA | NA | NA | NA | NA | NA | NA | NA | NA | NA |
| Benzo(k)fluoranthene | 11.5 | 211 | --- | --- | NA | NA | NA | NA | NA | NA | NA | NA | NA | NA | NA | NA | NA |
| Chrysene | 115 | 2,110 | 0.1446 | --- | NA | NA | NA | NA | NA | NA | NA | NA | NA | NA | NA | NA | NA |
| Dibenzo(a,h)anthracene | 0.115 | 2.11 | --- | --- | NA | NA | NA | NA | NA | NA | NA | NA | NA | NA | NA | NA | NA |
| Fluoranthene | 2,390 | 30,100 | 88.8778 | --- | NA | NA | NA | NA | NA | NA | NA | NA | NA | NA | NA | NA | NA |
| Fluorene | 2,390 | 30,100 | 14.8299 | --- | NA | NA | NA | NA | NA | NA | NA | NA | NA | NA | NA | NA | NA |
| Indeno(1,2,3-cd)pyrene | 1.15 | 21.1 | --- | --- | NA | NA | NA | NA | NA | NA | NA | NA | NA | NA | NA | NA | NA |
| 1-methyl naphthalene | 17.6 | 72.7 | --- | --- | NA | NA | NA | NA | NA | NA | NA | NA | NA | NA | NA | NA | NA |
| 2-methyl naphthalene | 239 | 3,010 | --- | --- | NA | NA | NA | NA | NA | NA | NA | NA | NA | NA | NA | NA | NA |
| Naphthalene | 5.52 | 24.1 | 0.6582 | --- | NA | NA | NA | NA | NA | NA | NA | NA | NA | NA | NA | NA | NA |
| Phenanthrene | --- | --- | --- | --- | NA | NA | NA | NA | NA | NA | NA | NA | NA | NA | NA | NA | NA |
| Pyrene | 1,790 | 22,600 | 54.5455 | --- | NA | NA | NA | NA | NA | NA | NA | NA | NA | NA | NA | NA | NA |
| Total Dectected PAHs | --- | --- | --- | --- | NA | NA | NA | NA | NA | NA | NA | NA | NA | NA | NA | NA | NA |

Bold values exceed protection of groundwater residual contaminant level
Boxed values exceed non-industrial direct contact residual contaminant level
Underlined values exceeded the background threshold value
Metals that exceed the background threshold values are compared to residual contaminant levels
--- - no standard established
B - Compound was found in the blank and sample
F1 - matrix spike and/or matrix spike duplicate recovery is outside acceptance limits
F2 - matrix spike/matrix spike duplicate relative percent difference exceeds control limits

J - Results between laboratory limit of detection and limit of quanitification
bgs - below ground surface
NA - not analyzed or not available
ND - not detected
mg/kg - milligrams per kilogram
PAHs - polynuclear aromatic hydrocarbons
TCLP - toxicity characteristic leaching procedure
VOCs - volatile organic compounds

**Table 1. Soil Analytical Results**

**Former Wayne Pigment Corp, 300 Barclay Street and 139 Oregon Street, Milwaukee, Wisconsin**

| PARAMETERS | Non-Industrial Direct Contact Residual Contaminant Level | Industrial Direct Contact RCL (mg/kg) | Protection of Groundwater Residual Contaminant Level | Background Threshold Value | Sample ID | | | | | | | | | | | | |
|---|---|---|---|---|---|---|---|---|---|---|---|---|---|---|---|---|---|
| | | | | | SB-57 | | SB-58 | | SB-59 | | SB-60 | | SB-61 | | SB-63 | | SB-64 |
| Date Collected | | | | | 9/12/2016 | 9/12/2016 | 9/12/2016 | 9/12/2016 | 9/12/2016 | 9/12/2016 | 9/12/2016 | 9/12/2016 | 9/12/2016 | 9/12/2016 | 9/9/2016 | 9/9/2016 | 9/20/2016 |
| Depth (feet bgs) | | | | | 0-2 | 8-10 | 2-4 | 4-5 | 2-4 | 4-6 | 0-2 | 4-6 | 0-2 | 4-6 | 2-4 | 4-6 | 0-3 |
| Saturated(s)/Unsaturated(u) | | | | | u | s | u | u | u | u | u | u | u | u | u | u | u |
| **VOCs (mg/kg)** | | | | | | | | | | | | | | | | | |
| Benzene | 1.6 | 7.07 | 0.0051 | --- | <0.025 | <0.025 | <0.025 | <0.025 | <0.025 | <0.025 | <0.025 | **0.10** | <0.20 | <0.025 | <0.025 | **0.032J** | <0.025 |
| Bromobenzene | 342 | 679 | --- | --- | <0.025 | <0.025 | <0.025 | <0.025 | <0.025 | <0.025 | <0.025 | <0.025 | <0.20 | <0.025 | <0.025 | <0.025 | <0.025 |
| Bromomethane | 9.6 | 43 | 0.0051 | --- | <0.070 | <0.070 | <0.070 | <0.070 | <0.070 | <0.070 | <0.070 | <0.070 | <0.56 | <0.070 | <0.070 | <0.070 | <0.070 |
| n-Butylbenzene | 108 | 108 | --- | --- | <0.025 | 1.0 | 0.15 | 0.055J | <0.025 | <0.025 | 0.55 | <0.025 | 0.91 | 0.066J | <0.025 | <0.025 | <0.025 |
| sec-Butylbenzene | 145 | 145 | --- | --- | 0.13 | 1.2 | 0.12 | 0.067J | <0.025 | <0.025 | 0.33 | <0.025 | 0.77 | 0.049J | <0.025 | <0.025 | <0.025 |
| tert-Butylbenzene | 183 | 183 | --- | --- | <0.025 | 0.18 | <0.025 | <0.025 | <0.025 | <0.025 | 0.096 | <0.025 | <0.20 | <0.025 | <0.025 | <0.025 | <0.025 |
| Chlorobenzene | 370 | 761 | --- | --- | <0.025 | <0.025 | <0.025 | <0.025 | <0.025 | <0.025 | <0.025 | <0.025 | <0.20 | <0.025 | <0.025 | <0.025 | <0.025 |
| Chloroethane | --- | --- | 0.2266 | --- | <0.067 | <0.067 | <0.067 | <0.067 | <0.067 | <0.067 | <0.067 | <0.067 | <0.54 | <0.067 | <0.067 | <0.067 | <0.067 |
| Chloroform | 0.454 | 1.98 | 0.0033 | --- | <0.046 | <0.046 | <0.046 | <0.046 | <0.046 | <0.046 | <0.046 | <0.046 | <0.37 | <0.046 | <0.046 | <0.046 | <0.046 |
| 1,1-Dichloroethane | 5.06 | 22.2 | 0.4828 | --- | <0.025 | <0.025 | <0.025 | <0.025 | <0.025 | <0.025 | <0.025 | <0.025 | <0.20 | <0.025 | <0.025 | <0.025 | <0.025 |
| 1,2-Dichloroethane | 0.652 | 2.87 | 0.0028 | --- | <0.025 | <0.025 | <0.025 | <0.025 | <0.025 | <0.025 | <0.025 | <0.025 | <0.20 | <0.025 | <0.025 | <0.025 | <0.025 |
| 1,1-Dichloroethene | 320 | 1,190 | 0.005 | --- | <0.025 | <0.025 | <0.025 | <0.025 | <0.025 | <0.025 | <0.025 | <0.025 | <0.20 | <0.025 | <0.025 | <0.025 | <0.025 |
| cis-1,2-Dichloroethene | 156 | 2340 | 0.0412 | --- | <0.025 | <0.025 | <0.025 | <0.025 | <0.025 | <0.025 | <0.025 | <0.025 | <0.20 | <0.025 | <0.025 | <0.025 | <0.025 |
| trans-1,2-Dichloroethene | 1,560 | 1850 | 0.0626 | --- | <0.025 | <0.025 | <0.025 | <0.025 | <0.025 | <0.025 | <0.025 | <0.025 | <0.20 | <0.025 | <0.025 | <0.025 | <0.025 |
| Di-isopropyl ether | 2,260 | 2260 | --- | --- | <0.025 | <0.025 | <0.025 | <0.025 | <0.025 | <0.025 | <0.025 | <0.025 | <0.20 | <0.025 | <0.025 | <0.025 | <0.025 |
| Ethylbenzene | 8.03 | 35.4 | 1.57 | --- | <0.025 | 0.10J | 0.51 | **4.9** | 0.81 | <0.025 | 0.43 | **4.7** | **6.7** | 0.048J | 0.032J | 0.15 | <0.025 |
| Hexachlorobutadiene | 1.63 | 7.49 | --- | --- | <0.025 | <0.025 | <0.025 | <0.025 | <0.025 | <0.025 | <0.025 | <0.025 | <0.20 | <0.025 | <0.025 | <0.025 | <0.025 |
| Isopropylbenzene | --- | --- | --- | --- | 0.11 | 7.2 | 6.2 | 10.6 | 0.23 | 0.043J | 0.84 | 0.20 | 6.4 | 0.15 | <0.025 | <0.025 | <0.025 |
| p-Isopropyltoluene | 162 | 162 | --- | --- | <0.025 | <0.025 | 0.48 | 0.20 | <0.025 | <0.025 | 2.2 | 0.072J | <0.20 | 0.073J | <0.025 | <0.025 | <0.025 |
| 2-Butanone (MEK) | 28,400 | 28,400 | 1.6661 | --- | NA | NA | NA | NA | NA | NA | NA | NA | NA | NA | NA | NA | NA |
| Methylene chloride | 61.8 | 1150 | 0.0026 | --- | <0.025 | <0.025 | <0.025 | <0.025 | <0.025 | <0.025 | <0.025 | <0.025 | <0.20 | <0.025 | <0.025 | <0.025 | <0.025 |
| Naphthalene | 5.52 | 24.1 | 0.6582 | --- | <0.040 | <0.040 | **0.66** | 0.36 | 0.068J | 0.065J | **2.2** | 0.25J | **1.5J** | 0.11J | 0.053J | 0.053J | 0.082J |
| n-Propylbenzene | --- | --- | --- | --- | <0.025 | 3.0 | 3.3 | 4.8 | 0.071J | <0.025 | 0.51 | 0.036J | 0.96 | 0.045J | <0.025 | <0.025 | <0.025 |
| Styrene | 867 | 867 | 0.22 | --- | <0.025 | <0.025 | <0.025 | <0.025 | <0.025 | <0.025 | <0.025 | <0.025 | <0.20 | <0.025 | <0.025 | <0.025 | <0.025 |
| Tetrachloroethene | 33 | 145 | 0.0045 | --- | <0.025 | <0.025 | <0.025 | <0.025 | <0.025 | <0.025 | <0.025 | <0.025 | <0.20 | <0.025 | <0.025 | <0.025 | **0.19** |
| Toluene | 818 | 818 | 1.1072 | --- | <0.025 | <0.025 | <0.025 | <0.025 | <0.025 | <0.025 | <0.025 | <0.025 | <0.20 | <0.025 | 0.14 | 0.81 | 0.10 |
| 1,2,3-Trichlorobenzene | 62.6 | 934 | --- | --- | <0.025 | <0.025 | <0.025 | <0.025 | <0.025 | <0.025 | <0.025 | <0.025 | <0.20 | <0.025 | <0.025 | <0.025 | <0.025 |
| 1,2,4-Trichlorobenzene | 24 | 113 | 0.408 | --- | <0.048 | <0.048 | <0.048 | <0.048 | <0.048 | <0.048 | <0.048 | <0.048 | <0.38 | <0.048 | <0.048 | <0.048 | <0.048 |
| 1,1,1-Trichloroethane | 640 | 640 | 0.1402 | --- | <0.025 | <0.025 | <0.025 | <0.025 | <0.025 | <0.025 | <0.025 | <0.025 | <0.20 | <0.025 | <0.025 | <0.025 | <0.025 |
| 1,1,2-Trichloroethane | 1.59 | 7.01 | 0.0032 | --- | <0.025 | <0.025 | <0.025 | <0.025 | <0.025 | <0.025 | <0.025 | <0.025 | <0.20 | <0.025 | <0.025 | <0.025 | <0.025 |
| Trichloroethene | 1.3 | 8.41 | 0.0036 | --- | <0.025 | <0.025 | <0.025 | <0.025 | <0.025 | <0.025 | <0.025 | <0.025 | <0.20 | <0.025 | <0.025 | <0.025 | **0.98** |
| Trichlorofluoromethane | 1,230 | 1230 | 4.4758 | --- | <0.025 | <0.025 | <0.025 | <0.025 | <0.025 | <0.025 | <0.025 | <0.025 | <0.20 | <0.025 | <0.025 | <0.025 | <0.025 |
| 1,2,3-Trimethylbenzene | 182 | 182 | --- | --- | NA | NA | NA | NA | NA | NA | NA | NA | NA | NA | NA | NA | NA |
| 1,2,4-Trimethylbenzene | 219 | 219 | --- | --- | 0.14 | 0.072J | 3.2 | 1.8 | 0.044J | <0.025 | 1.4 | 0.14 | 5.3 | 0.13 | <0.025 | <0.025 | <0.025 |
| 1,3,5-Trimethylbenzene | 182 | 182 | --- | --- | <0.025 | <0.025 | 2.0 | 0.67 | <0.025 | <0.025 | 0.83 | 0.071J | 1.4 | <0.025 | <0.025 | <0.025 | <0.025 |
| Trimethylbenzenes | --- | --- | 1.3821 | --- | 0.14 | 0.072 | **5.2** | **2.47** | 0.044 | <0.025 | **2.23** | 0.211 | **6.7** | 0.13 | <0.025 | <0.025 | <0.025 |
| Vinyl Chloride | 0.067 | 2.08 | 0.0001 | --- | <0.025 | <0.025 | <0.025 | <0.025 | <0.025 | <0.025 | <0.025 | <0.025 | <0.20 | <0.025 | <0.025 | <0.025 | <0.025 |
| m&p-Xylene | --- | --- | --- | --- | 0.11J | <0.050 | 17.0 | 11.6 | 0.52 | 0.079J | 1.3 | 1.4 | 39.5 | 0.13J | 0.16 | 0.74 | 0.11J |
| o-Xylene | --- | --- | --- | --- | <0.025 | <0.025 | 0.033J | <0.025 | 0.19 | <0.025 | 0.89 | 0.56 | 40.0 | 0.12 | 0.054J | 0.11 | 0.040J |
| Xylenes | 260 | 260 | 3.96 | --- | 0.11 | <0.050 | **17.033** | **11.6** | 0.71 | 0.079 | 2.19 | 1.96 | **79.5** | 0.25 | 0.214 | 0.85 | 0.15 |

**Table 1. Soil Analytical Results**

**Former Wayne Pigment Corp, 300 Barclay Street and 139 Oregon Street, Milwaukee, Wisconsin**

| PARAMETERS | Non-Industrial Direct Contact Residual Contaminant Level | Industrial Direct Contact RCL (mg/kg) | Protection of Groundwater Residual Contaminant Level | Background Threshold Value | Sample ID | | | | | | | | | | | | |
|---|---|---|---|---|---|---|---|---|---|---|---|---|---|---|---|---|---|
| | | | | | SB-57 | | SB-58 | | SB-59 | | SB-60 | | SB-61 | | SB-63 | | SB-64 |
| Date Collected | | | | | 9/12/2016 | 9/12/2016 | 9/12/2016 | 9/12/2016 | 9/12/2016 | 9/12/2016 | 9/12/2016 | 9/12/2016 | 9/12/2016 | 9/12/2016 | 9/9/2016 | 9/9/2016 | 9/20/2016 |
| Depth (feet bgs) | | | | | 0-2 | 8-10 | 2-4 | 4-5 | 2-4 | 4-6 | 0-2 | 4-6 | 0-2 | 4-6 | 2-4 | 4-6 | 0-3 |
| Saturated(s)/Unsaturated(u) | | | | | u | s | u | u | u | u | u | u | u | u | u | u | u |
| **Metals (mg/kg)** | | | | | | | | | | | | | | | | | |
| Arsenic | 0.677 | 3 | 0.584 | 8.0 | **32.2** | 4.2 | **17.7** | **1,120** | **29.6** | **8.5** | **1210** | **191** | **2,610** | **198** | NA | NA | NA |
| Barium | 15,300 | 100,000 | 164.8 | 364 | 60.6 | 39.2 | 149 | 136 | 350 | 95.4 | 71.3 | 69.2 | 89.9 | 78.6 | NA | NA | NA |
| Cadmium | 71 | 985 | 0.752 | 1.0 | <0.074 | 0.79J | <0.065 | <0.37 | <0.074 | <0.10 | <0.35 | <0.078 | <0.36 | <0.091 | NA | NA | NA |
| Chromium | --- | --- | 360,000 | 44 | 31 | 28 | 49 F2, F1 | 74 | 220 | 100 | 2,700 | 32 | 8,500 | 120 | NA | NA | NA |
| Trivalent Chromium | 100,000 | 100,000 | --- | --- | 31 | 28 | 48 | 74 | 220 | 100 | 2,700 | 32 | 8,500 | 120 | NA | NA | NA |
| Hexavalent Chromium | 0.301 | 6 | --- | --- | 0.41J | <0.56 | 0.85J | <0.42 | <0.40 | <0.45 | <0.37 | <0.37 | 16 | <0.38 | NA | NA | NA |
| Lead | 400 | 800 | 27 | 52 | **106** | 34.8 | **96.4** | **361** | **355** | 37.5 | **488** | 26.0 | **417** | **94.7** | NA | NA | NA |
| Mercury | 3.13 | 3.13 | 0.208 | --- | <0.044 | <0.071 | 0.19 | **0.54** | 0.11J | **0.50** | 0.10J | <0.039 | **1.1** | **0.29** | NA | NA | NA |
| Selenium | 391 | 5,840 | 0.52 | --- | <0.86 | <1.4 | <0.76 | <0.86 | 1.0J | <1.2 | <0.81 | <0.90 | <0.84 | <1.1 | NA | NA | NA |
| Silver | 391 | 5,840 | 0.8491 | --- | <0.31 | <0.49 | <0.28 | <0.31 | <0.31 | <0.42 | <0.29 | <0.33 | <0.30 | <0.38 | NA | NA | NA |
| **PAHs (mg/kg)** | | | | | | | | | | | | | | | | | |
| Acenaphthene | 3,590 | 45,200 | --- | --- | NA | NA | NA | NA | NA | NA | NA | NA | NA | NA | NA | NA | NA |
| Acenaphthylene | --- | --- | --- | --- | NA | NA | NA | NA | NA | NA | NA | NA | NA | NA | NA | NA | NA |
| Anthracene | 17,200 | 100,000 | 196.9492 | --- | NA | NA | NA | NA | NA | NA | NA | NA | NA | NA | NA | NA | NA |
| Benzo(a)anthracene | 1.14 | 20.8 | --- | --- | NA | NA | NA | NA | NA | NA | NA | NA | NA | NA | NA | NA | NA |
| Benzo(a)pyrene | 0.115 | 2.11 | 0.470 | --- | NA | NA | NA | NA | NA | NA | NA | NA | NA | NA | NA | NA | NA |
| Benzo(b)fluoranthene | 1.15 | 21.1 | 0.4793 | --- | NA | NA | NA | NA | NA | NA | NA | NA | NA | NA | NA | NA | NA |
| Benzo(g,h,i)perylene | --- | --- | --- | --- | NA | NA | NA | NA | NA | NA | NA | NA | NA | NA | NA | NA | NA |
| Benzo(k)fluoranthene | 11.5 | 211 | --- | --- | NA | NA | NA | NA | NA | NA | NA | NA | NA | NA | NA | NA | NA |
| Chrysene | 115 | 2,110 | 0.1446 | --- | NA | NA | NA | NA | NA | NA | NA | NA | NA | NA | NA | NA | NA |
| Dibenzo(a,h)anthracene | 0.115 | 2.11 | --- | --- | NA | NA | NA | NA | NA | NA | NA | NA | NA | NA | NA | NA | NA |
| Fluoranthene | 2,390 | 30,100 | 88.8778 | --- | NA | NA | NA | NA | NA | NA | NA | NA | NA | NA | NA | NA | NA |
| Fluorene | 2,390 | 30,100 | 14.8299 | --- | NA | NA | NA | NA | NA | NA | NA | NA | NA | NA | NA | NA | NA |
| Indeno(1,2,3-cd)pyrene | 1.15 | 21.1 | --- | --- | NA | NA | NA | NA | NA | NA | NA | NA | NA | NA | NA | NA | NA |
| 1-methyl naphthalene | 17.6 | 72.7 | --- | --- | NA | NA | NA | NA | NA | NA | NA | NA | NA | NA | NA | NA | NA |
| 2-methyl naphthalene | 239 | 3,010 | --- | --- | NA | NA | NA | NA | NA | NA | NA | NA | NA | NA | NA | NA | NA |
| Naphthalene | 5.52 | 24.1 | 0.6582 | --- | NA | NA | NA | NA | NA | NA | NA | NA | NA | NA | NA | NA | NA |
| Phenanthrene | --- | --- | --- | --- | NA | NA | NA | NA | NA | NA | NA | NA | NA | NA | NA | NA | NA |
| Pyrene | 1,790 | 22,600 | 54.5455 | --- | NA | NA | NA | NA | NA | NA | NA | NA | NA | NA | NA | NA | NA |
| Total Dectected PAHs | --- | --- | --- | --- | NA | NA | NA | NA | NA | NA | NA | NA | NA | NA | NA | NA | NA |

Bold values exceed protection of groundwater residual contaminant level
Boxed values exceed non-industrial direct contact residual contaminant level
Underlined values exceeded the background threshold value
Metals that exceed the background threshold values are compared to residual contaminant levels
--- - no standard established
B - Compound was found in the blank and sample
F1 - matrix spike and/or matrix spike duplicate recovery is outside acceptance limits
F2 - matrix spike/matrix spike duplicate relative percent difference exceeds control limits

J - Results between laboratory limit of detection and limit of quanitification
bgs - below ground surface
NA - not analyzed or not available
ND - not detected
mg/kg - milligrams per kilogram
PAHs - polynuclear aromatic hydrocarbons
TCLP - toxicity characteristic leaching procedure
VOCs - volatile organic compounds

**Table 1. Soil Analytical Results**

**Former Wayne Pigment Corp, 300 Barclay Street and 139 Oregon Street, Milwaukee, Wisconsin**

| PARAMETERS | Non-Industrial Direct Contact Residual Contaminant Level | Industrial Direct Contact RCL (mg/kg) | Protection of Groundwater Residual Contaminant Level | Background Threshold Value | Sample ID | | | | | | | | | | | | |
|---|---|---|---|---|---|---|---|---|---|---|---|---|---|---|---|---|---|
| | | | | | SB-64 | SB-65 | | | SB-65 | | | SB-66 | | SB-67 | | SB-68 | |
| Date Collected | | | | | 9/20/2016 | 9/16/2016 | 9/16/2016 | 9/16/2016 | 9/16/2016 | 9/16/2016 | 9/16/2016 | 9/16/2016 | 9/16/2016 | 9/16/2016 | 9/16/2016 | 9/16/2016 | 9/16/2016 |
| Depth (feet bgs) | | | | | 6-8 | 2-4 | 6-8 | 14-16 | 20-24 | 30-32 | 46-48 | 2-4 | 10-12 | 2-4 | 6-8 | 0-2 | 6-8 |
| Saturated(s)/Unsaturated(u) | | | | | s | u | s | s | s | s | s | u | s | u | s | u | s |
| **VOCs (mg/kg)** | | | | | | | | | | | | | | | | | |
| Benzene | 1.6 | 7.07 | 0.0051 | --- | <0.025 | <0.50 | **0.17** | <0.025 | <0.025 | <0.025 | <0.025 | **0.071J** | <0.025 | <5.0 | **0.094** | <0.025 | **0.090J** |
| Bromobenzene | 342 | 679 | --- | --- | <0.025 | <0.50 | <0.025 | <0.025 | <0.025 | <0.025 | <0.025 | <0.025 | <0.025 | <5.0 | <0.025 | <0.025 | <0.025 |
| Bromomethane | 9.6 | 43 | 0.0051 | --- | <0.070 | <1.4 | <0.070 | <0.070 | <0.070 | <0.070 | <0.070 | <0.070 | <0.070 | <14.0 | <0.070 | <0.070 | <0.070 |
| n-Butylbenzene | 108 | 108 | --- | --- | <0.025 | <0.50 | 0.063J | <0.025 | <0.025 | <0.025 | <0.025 | <0.025 | <0.025 | <5.0 | <0.025 | <0.025 | <0.025 |
| sec-Butylbenzene | 145 | 145 | --- | --- | <0.025 | <0.50 | 0.061J | <0.025 | <0.025 | <0.025 | <0.025 | <0.025 | <0.025 | <5.0 | 0.040J | <0.025 | <0.025 |
| tert-Butylbenzene | 183 | 183 | --- | --- | <0.025 | <0.50 | <0.025 | <0.025 | <0.025 | <0.025 | <0.025 | <0.025 | <0.025 | <5.0 | <0.025 | <0.025 | <0.025 |
| Chlorobenzene | 370 | 761 | --- | --- | <0.025 | <0.50 | <0.025 | <0.025 | <0.025 | <0.025 | <0.025 | <0.025 | <0.025 | <5.0 | <0.025 | <0.025 | <0.025 |
| Chloroethane | --- | --- | 0.2266 | --- | <0.067 | <1.3 | <0.067 | **0.27J** | <0.067 | <0.067 | <0.067 | <0.067 | <0.067 | <13.4 | <0.067 | <0.067 | <0.067 |
| Chloroform | 0.454 | 1.98 | 0.0033 | --- | <0.046 | <0.93 | <0.046 | <0.046 | <0.046 | <0.046 | <0.046 | <0.046 | <0.046 | <9.3 | <0.046 | <0.046 | <0.046 |
| 1,1-Dichloroethane | 5.06 | 22.2 | 0.4828 | --- | <0.025 | <0.50 | **0.96** | 0.25 | <0.025 | <0.025 | <0.025 | **3.5** | <0.025 | **20.2** | 0.25 | <0.025 | **1.1** |
| 1,2-Dichloroethane | 0.652 | 2.87 | 0.0028 | --- | <0.025 | <0.50 | <0.025 | <0.025 | <0.025 | <0.025 | <0.025 | <0.025 | <0.025 | <5.0 | <0.025 | <0.025 | <0.025 |
| 1,1-Dichloroethene | 320 | 1,190 | 0.005 | --- | <0.025 | <0.50 | <0.025 | <0.025 | <0.025 | <0.025 | <0.025 | <0.025 | <0.025 | <5.0 | <0.025 | <0.025 | <0.025 |
| cis-1,2-Dichloroethene | 156 | 2340 | 0.0412 | --- | <0.025 | <0.50 | **0.12** | <0.025 | <0.025 | <0.025 | <0.025 | <0.025 | <0.025 | <5.0 | **0.47** | <0.025 | **0.14** |
| trans-1,2-Dichloroethene | 1,560 | 1850 | 0.0626 | --- | <0.025 | <0.50 | **0.44** | **0.14** | <0.025 | <0.025 | <0.025 | <0.025 | <0.025 | <5.0 | **0.58** | <0.025 | **0.093J** |
| Di-isopropyl ether | 2,260 | 2260 | --- | --- | <0.025 | <0.50 | <0.025 | <0.025 | <0.025 | <0.025 | <0.025 | <0.025 | <0.025 | <5.0 | <0.025 | <0.025 | 0.066J |
| Ethylbenzene | 8.03 | 35.4 | 1.57 | --- | 0.030J | <0.50 | **2.1** | <0.025 | <0.025 | <0.025 | <0.025 | 0.049J | <0.025 | <5.0 | **4.8** | 0.035J | **5.6** |
| Hexachlorobutadiene | 1.63 | 7.49 | --- | --- | <0.025 | <0.50 | <0.025 | <0.025 | <0.025 | <0.025 | <0.025 | <0.025 | <0.025 | <5.0 | <0.025 | <0.025 | <0.025 |
| Isopropylbenzene | --- | --- | --- | --- | <0.025 | <0.50 | 0.24 | <0.025 | <0.025 | <0.025 | <0.025 | <0.025 | <0.025 | <5.0 | 0.95 | <0.025 | 0.75 |
| p-Isopropyltoluene | 162 | 162 | --- | --- | <0.025 | <0.50 | 0.074J | <0.025 | <0.025 | <0.025 | <0.025 | <0.025 | <0.025 | <5.0 | 0.13 | <0.025 | 0.30 |
| 2-Butanone (MEK) | 28,400 | 28,400 | 1.6661 | --- | NA | NA | NA | NA | NA | NA | NA | NA | NA | NA | NA | NA | NA |
| Methylene chloride | 61.8 | 1150 | 0.0026 | --- | <0.025 | <0.50 | <0.025 | <0.025 | <0.025 | <0.025 | <0.025 | <0.025 | <0.025 | <5.0 | <0.025 | <0.025 | <0.025 |
| Naphthalene | 5.52 | 24.1 | 0.6582 | --- | 0.17J | <0.80 | 0.090J | <0.040 | <0.040 | <0.040 | <0.040 | **0.77** | <0.040 | <8.0 | 0.13J | 0.12J | <0.040 |
| n-Propylbenzene | --- | --- | --- | --- | <0.025 | <0.50 | 0.13 | <0.025 | <0.025 | <0.025 | <0.025 | <0.025 | <0.025 | <5.0 | 0.10 | <0.025 | 0.080J |
| Styrene | 867 | 867 | 0.22 | --- | <0.025 | <0.50 | <0.025 | <0.025 | <0.025 | <0.025 | <0.025 | <0.025 | <0.025 | <5.0 | <0.025 | <0.025 | <0.025 |
| Tetrachloroethene | 33 | 145 | 0.0045 | --- | **0.20** | **4.7** | <0.025 | <0.025 | <0.025 | <0.025 | <0.025 | <0.025 | <0.025 | <5.0 | <0.025 | **0.040J** | <0.025 |
| Toluene | 818 | 818 | 1.1072 | --- | 0.11 | **1.2J** | 0.65 | <0.025 | <0.025 | <0.025 | <0.025 | 0.11 | <0.025 | <5.0 | **2.0** | 0.64 | **3.1** |
| 1,2,3-Trichlorobenzene | 62.6 | 934 | --- | --- | <0.025 | <0.50 | <0.025 | <0.025 | <0.025 | <0.025 | <0.025 | <0.025 | <0.025 | <5.0 | <0.025 | <0.025 | <0.025 |
| 1,2,4-Trichlorobenzene | 24 | 113 | 0.408 | --- | <0.048 | <0.95 | <0.048 | <0.048 | <0.048 | <0.048 | <0.048 | <0.048 | <0.048 | <9.5 | <0.048 | <0.048 | <0.048 |
| 1,1,1-Trichloroethane | 640 | 640 | 0.1402 | --- | 0.031J | **4.9** | <0.025 | <0.025 | <0.025 | <0.025 | <0.025 | **4.7** | <0.025 | **94.1** | 0.15 | 0.31 | <0.025 |
| 1,1,2-Trichloroethane | 1.59 | 7.01 | 0.0032 | --- | <0.025 | <0.50 | <0.025 | <0.025 | <0.025 | <0.025 | <0.025 | <0.025 | <0.025 | <5.0 | <0.025 | <0.025 | <0.025 |
| Trichloroethene | 1.3 | 8.41 | 0.0036 | --- | **1.2** | **74.2** | **0.099** | **0.070J** | **0.067J** | <0.025 | <0.025 | **0.066J** | **0.032J** | **831** | **2.9** | **6.3** | **0.11** |
| Trichlorofluoromethane | 1,230 | 1230 | 4.4758 | --- | <0.025 | <0.50 | <0.025 | <0.025 | <0.025 | <0.025 | <0.025 | <0.025 | <0.025 | <5.0 | <0.025 | <0.025 | <0.025 |
| 1,2,3-Trimethylbenzene | 182 | 182 | --- | --- | NA | NA | NA | NA | NA | NA | NA | NA | NA | NA | NA | NA | NA |
| 1,2,4-Trimethylbenzene | 219 | 219 | --- | --- | 0.11 | <0.50 | 0.66 | <0.025 | <0.025 | <0.025 | <0.025 | 0.080 | <0.025 | <5.0 | 0.24 | 0.062J | 0.18 |
| 1,3,5-Trimethylbenzene | 182 | 182 | --- | --- | 0.034J | <0.50 | 0.22 | <0.025 | <0.025 | <0.025 | <0.025 | 0.055J | <0.025 | <5.0 | 0.12 | <0.025 | 0.11 |
| Trimethylbenzenes | --- | --- | 1.3821 | --- | 0.144 | <0.50 | 0.88 | <0.025 | <0.025 | <0.025 | <0.025 | 0.135 | <0.025 | <5.0 | 0.36 | 0.062 | 0.29 |
| Vinyl Chloride | 0.067 | 2.08 | 0.0001 | --- | <0.025 | <0.50 | **3.2** | <0.025 | <0.025 | <0.025 | <0.025 | <0.025 | <0.025 | <5.0 | **0.64** | <0.025 | **0.60** |
| m&p-Xylene | --- | --- | --- | --- | 0.19 | <1.0 | 5.7 | <0.050 | <0.050 | <0.050 | <0.050 | 0.15 | <0.050 | <10.0 | 18.3 | 0.18 | 17.2 |
| o-Xylene | --- | --- | --- | --- | 0.097 | <0.50 | 2.3 | <0.025 | <0.025 | <0.025 | <0.025 | 0.061J | <0.025 | <5.0 | 3.6 | 0.087 | 4.1 |
| Xylenes | 260 | 260 | 3.96 | --- | 0.287 | <1.0 | **8.0** | <0.050 | <0.050 | <0.050 | <0.050 | 0.211 | <0.050 | <10.0 | **21.9** | 0.267 | **21.3** |

**Table 1. Soil Analytical Results**

**Former Wayne Pigment Corp, 300 Barclay Street and 139 Oregon Street, Milwaukee, Wisconsin**

| PARAMETERS | Non-Industrial Direct Contact Residual Contaminant Level | Industrial Direct Contact RCL (mg/kg) | Protection of Groundwater Residual Contaminant Level | Background Threshold Value | Sample ID | | | | | | | | | | | | |
|---|---|---|---|---|---|---|---|---|---|---|---|---|---|---|---|---|---|
| | | | | | SB-64 | SB-65 | | | SB-65 | | | SB-66 | | SB-67 | | SB-68 | |
| Date Collected | | | | | 9/20/2016 | 9/16/2016 | 9/16/2016 | 9/16/2016 | 9/16/2016 | 9/16/2016 | 9/16/2016 | 9/16/2016 | 9/16/2016 | 9/16/2016 | 9/16/2016 | 9/16/2016 | 9/16/2016 |
| Depth (feet bgs) | | | | | 6-8 | 2-4 | 6-8 | 14-16 | 20-24 | 30-32 | 46-48 | 2-4 | 10-12 | 2-4 | 6-8 | 0-2 | 6-8 |
| Saturated(s)/Unsaturated(u) | | | | | s | u | s | s | s | s | s | u | s | u | s | u | s |
| **Metals (mg/kg)** | | | | | | | | | | | | | | | | | |
| Arsenic | 0.677 | 3 | 0.584 | 8.0 | NA | NA | NA | NA | NA | NA | NA | NA | NA | NA | NA | NA | NA |
| Barium | 15,300 | 100,000 | 164.8 | 364 | NA | NA | NA | NA | NA | NA | NA | NA | NA | NA | NA | NA | NA |
| Cadmium | 71 | 985 | 0.752 | 1.0 | NA | NA | NA | NA | NA | NA | NA | NA | NA | NA | NA | NA | NA |
| Chromium | --- | --- | 360,000 | 44 | NA | NA | NA | NA | NA | NA | NA | NA | NA | NA | NA | NA | NA |
| Trivalent Chromium | 100,000 | 100,000 | --- | --- | NA | NA | NA | NA | NA | NA | NA | NA | NA | NA | NA | NA | NA |
| Hexavalent Chromium | 0.301 | 6 | --- | --- | NA | NA | NA | NA | NA | NA | NA | NA | NA | NA | NA | NA | NA |
| Lead | 400 | 800 | 27 | 52 | NA | NA | NA | NA | NA | NA | NA | NA | NA | NA | NA | NA | NA |
| Mercury | 3.13 | 3.13 | 0.208 | --- | NA | NA | NA | NA | NA | NA | NA | NA | NA | NA | NA | NA | NA |
| Selenium | 391 | 5,840 | 0.52 | --- | NA | NA | NA | NA | NA | NA | NA | NA | NA | NA | NA | NA | NA |
| Silver | 391 | 5,840 | 0.8491 | --- | NA | NA | NA | NA | NA | NA | NA | NA | NA | NA | NA | NA | NA |
| **PAHs (mg/kg)** | | | | | | | | | | | | | | | | | |
| Acenaphthene | 3,590 | 45,200 | --- | --- | NA | NA | NA | NA | NA | NA | NA | NA | NA | NA | NA | NA | NA |
| Acenaphthylene | --- | --- | --- | --- | NA | NA | NA | NA | NA | NA | NA | NA | NA | NA | NA | NA | NA |
| Anthracene | 17,200 | 100,000 | 196.9492 | --- | NA | NA | NA | NA | NA | NA | NA | NA | NA | NA | NA | NA | NA |
| Benzo(a)anthracene | 1.14 | 20.8 | --- | --- | NA | NA | NA | NA | NA | NA | NA | NA | NA | NA | NA | NA | NA |
| Benzo(a)pyrene | 0.115 | 2.11 | 0.470 | --- | NA | NA | NA | NA | NA | NA | NA | NA | NA | NA | NA | NA | NA |
| Benzo(b)fluoranthene | 1.15 | 21.1 | 0.4793 | --- | NA | NA | NA | NA | NA | NA | NA | NA | NA | NA | NA | NA | NA |
| Benzo(g,h,i)perylene | --- | --- | --- | --- | NA | NA | NA | NA | NA | NA | NA | NA | NA | NA | NA | NA | NA |
| Benzo(k)fluoranthene | 11.5 | 211 | --- | --- | NA | NA | NA | NA | NA | NA | NA | NA | NA | NA | NA | NA | NA |
| Chrysene | 115 | 2,110 | 0.1446 | --- | NA | NA | NA | NA | NA | NA | NA | NA | NA | NA | NA | NA | NA |
| Dibenzo(a,h)anthracene | 0.115 | 2.11 | --- | --- | NA | NA | NA | NA | NA | NA | NA | NA | NA | NA | NA | NA | NA |
| Fluoranthene | 2,390 | 30,100 | 88.8778 | --- | NA | NA | NA | NA | NA | NA | NA | NA | NA | NA | NA | NA | NA |
| Fluorene | 2,390 | 30,100 | 14.8299 | --- | NA | NA | NA | NA | NA | NA | NA | NA | NA | NA | NA | NA | NA |
| Indeno(1,2,3-cd)pyrene | 1.15 | 21.1 | --- | --- | NA | NA | NA | NA | NA | NA | NA | NA | NA | NA | NA | NA | NA |
| 1-methyl naphthalene | 17.6 | 72.7 | --- | --- | NA | NA | NA | NA | NA | NA | NA | NA | NA | NA | NA | NA | NA |
| 2-methyl naphthalene | 239 | 3,010 | --- | --- | NA | NA | NA | NA | NA | NA | NA | NA | NA | NA | NA | NA | NA |
| Naphthalene | 5.52 | 24.1 | 0.6582 | --- | NA | NA | NA | NA | NA | NA | NA | NA | NA | NA | NA | NA | NA |
| Phenanthrene | --- | --- | --- | --- | NA | NA | NA | NA | NA | NA | NA | NA | NA | NA | NA | NA | NA |
| Pyrene | 1,790 | 22,600 | 54.5455 | --- | NA | NA | NA | NA | NA | NA | NA | NA | NA | NA | NA | NA | NA |
| Total Dectected PAHs | --- | --- | --- | --- | NA | NA | NA | NA | NA | NA | NA | NA | NA | NA | NA | NA | NA |

Bold values exceed protection of groundwater residual contaminant level
Boxed values exceed non-industrial direct contact residual contaminant level
Underlined values exceeded the background threshold value
Metals that exceed the background threshold values are compared to residual contaminant levels
--- - no standard established
B - Compound was found in the blank and sample
F1 - matrix spike and/or matrix spike duplicate recovery is outside acceptance limits
F2 - matrix spike/matrix spike duplicate relative percent difference exceeds control limits

J - Results between laboratory limit of detection and limit of quanitification
bgs - below ground surface
NA - not analyzed or not available
ND - not detected
mg/kg - milligrams per kilogram
PAHs - polynuclear aromatic hydrocarbons
TCLP - toxicity characteristic leaching procedure
VOCs - volatile organic compounds

**Table 1. Soil Analytical Results**

**Former Wayne Pigment Corp, 300 Barclay Street and 139 Oregon Street, Milwaukee, Wisconsin**

| PARAMETERS | Non-Industrial Direct Contact Residual Contaminant Level | Industrial Direct Contact RCL (mg/kg) | Protection of Groundwater Residual Contaminant Level | Background Threshold Value | Sample ID | | | | | | | | | | | | |
|---|---|---|---|---|---|---|---|---|---|---|---|---|---|---|---|---|---|
| | | | | | SB-69 | | SB-70 | | SB-71 | | SB-75 | SB-76 | SB-77 | SB-78 | SB-79 | SB-80 | |
| Date Collected | | | | | 9/16/2016 | 9/16/2016 | 9/16/2016 | 9/16/2016 | 9/16/2016 | 9/16/2016 | 9/16/2016 | 9/16/2016 | 9/16/2016 | 9/16/2016 | 9/16/2016 | 9/16/2016 | 9/16/2016 |
| Depth (feet bgs) | | | | | 0-2 | 4-6 | 0-2 | 6-8 | 2-4 | 4-6 | 0-2 | 0-2 | 0-2 | 0-2 | 0-2 | 0-2 | 8-10 |
| Saturated(s)/Unsaturated(u) | | | | | u | s | u | s | u | s | u | u | u | u | u | u | s |
| **VOCs (mg/kg)** | | | | | | | | | | | | | | | | | |
| Benzene | 1.6 | 7.07 | 0.0051 | --- | <2.0 | <0.12 | <0.025 | **0.042J** | <0.025 | **0.077** | <0.025 | <0.025 | <0.025 | <0.025 | <0.025 | <0.025 | <0.025 |
| Bromobenzene | 342 | 679 | --- | --- | <2.0 | <0.12 | <0.025 | <0.025 | <0.025 | <0.025 | <0.025 | <0.025 | <0.025 | <0.025 | <0.025 | <0.025 | <0.025 |
| Bromomethane | 9.6 | 43 | 0.0051 | --- | <5.6 | <0.35 | <0.070 | <0.070 | <0.070 | <0.070 | <0.070 | <0.070 | <0.070 | <0.070 | <0.070 | <0.070 | <0.070 |
| n-Butylbenzene | 108 | 108 | --- | --- | <2.0 | <0.12 | <0.025 | <0.025 | <0.025 | <0.025 | <0.025 | <0.025 | <0.025 | <0.025 | <0.025 | <0.025 | <0.025 |
| sec-Butylbenzene | 145 | 145 | --- | --- | <2.0 | <0.12 | <0.025 | <0.025 | <0.025 | <0.025 | <0.025 | <0.025 | <0.025 | <0.025 | <0.025 | <0.025 | <0.025 |
| tert-Butylbenzene | 183 | 183 | --- | --- | <2.0 | <0.12 | <0.025 | <0.025 | <0.025 | <0.025 | <0.025 | <0.025 | <0.025 | <0.025 | <0.025 | <0.025 | <0.025 |
| Chlorobenzene | 370 | 761 | --- | --- | <2.0 | <0.12 | <0.025 | <0.025 | <0.025 | <0.025 | <0.025 | <0.025 | <0.025 | <0.025 | <0.025 | <0.025 | <0.025 |
| Chloroethane | --- | --- | 0.2266 | --- | <5.4 | <0.34 | <0.067 | <0.067 | <0.067 | <0.067 | <0.067 | <0.067 | <0.067 | <0.067 | <0.067 | <0.067 | <0.067 |
| Chloroform | 0.454 | 1.98 | 0.0033 | --- | <3.7 | <0.23 | <0.046 | <0.046 | <0.046 | <0.046 | <0.046 | <0.046 | <0.046 | <0.046 | <0.046 | <0.046 | <0.046 |
| 1,1-Dichloroethane | 5.06 | 22.2 | 0.4828 | --- | **2.3J** | **30.2** | <0.025 | <0.025 | 0.029J | 0.034J | <0.025 | <0.025 | <0.025 | <0.025 | <0.025 | <0.025 | <0.025 |
| 1,2-Dichloroethane | 0.652 | 2.87 | 0.0028 | --- | <2.0 | **0.21J** | <0.025 | <0.025 | <0.025 | <0.025 | <0.025 | <0.025 | <0.025 | <0.025 | <0.025 | <0.025 | <0.025 |
| 1,1-Dichloroethene | 320 | 1,190 | 0.005 | --- | <2.0 | **3.3** | <0.025 | <0.025 | <0.025 | <0.025 | <0.025 | <0.025 | <0.025 | <0.025 | <0.025 | <0.025 | <0.025 |
| cis-1,2-Dichloroethene | 156 | 2340 | 0.0412 | --- | <2.0 | **0.67** | <0.025 | <0.025 | <0.025 | <0.025 | <0.025 | <0.025 | <0.025 | <0.025 | <0.025 | <0.025 | <0.025 |
| trans-1,2-Dichloroethene | 1,560 | 1850 | 0.0626 | --- | <2.0 | <0.12 | <0.025 | <0.025 | <0.025 | <0.025 | <0.025 | <0.025 | <0.025 | <0.025 | <0.025 | <0.025 | <0.025 |
| Di-isopropyl ether | 2,260 | 2260 | --- | --- | <2.0 | <0.12 | <0.025 | <0.025 | <0.025 | <0.025 | <0.025 | <0.025 | <0.025 | <0.025 | <0.025 | <0.025 | <0.025 |
| Ethylbenzene | 8.03 | 35.4 | 1.57 | --- | <2.0 | <0.12 | <0.025 | <0.025 | <0.025 | 0.042J | <0.025 | <0.025 | <0.025 | <0.025 | <0.025 | <0.025 | <0.025 |
| Hexachlorobutadiene | 1.63 | 7.49 | --- | --- | <2.0 | <0.12 | <0.025 | <0.025 | <0.025 | <0.025 | <0.025 | <0.025 | <0.025 | <0.025 | <0.025 | <0.025 | <0.025 |
| Isopropylbenzene | --- | --- | --- | --- | <2.0 | <0.12 | <0.025 | <0.025 | <0.025 | <0.025 | <0.025 | <0.025 | <0.025 | <0.025 | <0.025 | <0.025 | <0.025 |
| p-Isopropyltoluene | 162 | 162 | --- | --- | <2.0 | <0.12 | <0.025 | <0.025 | <0.025 | <0.025 | <0.025 | <0.025 | <0.025 | <0.025 | <0.025 | <0.025 | <0.025 |
| 2-Butanone (MEK) | 28,400 | 28,400 | 1.6661 | --- | NA | NA | NA | NA | NA | NA | NA | NA | NA | NA | NA | NA | NA |
| Methylene chloride | 61.8 | 1150 | 0.0026 | --- | <2.0 | <0.12 | <0.025 | <0.025 | <0.025 | <0.025 | <0.025 | <0.025 | <0.025 | <0.025 | <0.025 | <0.025 | <0.025 |
| Naphthalene | 5.52 | 24.1 | 0.6582 | --- | <3.2 | <0.20 | 0.049J | **2.2** | 0.25J | 0.41 | 0.068J | 0.045J | <0.040 | <0.040 | <0.040 | 0.061J | <0.040 |
| n-Propylbenzene | --- | --- | --- | --- | <2.0 | <0.12 | <0.025 | <0.025 | <0.025 | 0.031J | <0.025 | <0.025 | <0.025 | <0.025 | <0.025 | <0.025 | <0.025 |
| Styrene | 867 | 867 | 0.22 | --- | <2.0 | <0.12 | <0.025 | <0.025 | <0.025 | <0.025 | <0.025 | <0.025 | <0.025 | <0.025 | <0.025 | <0.025 | <0.025 |
| Tetrachloroethene | 33 | 145 | 0.0045 | --- | <2.0 | <0.12 | **0.58** | <0.025 | **0.057J** | **0.044J** | <0.025 | <0.025 | <0.025 | <0.025 | <0.025 | <0.025 | <0.025 |
| Toluene | 818 | 818 | 1.1072 | --- | <2.0 | <0.12 | 0.056J | 0.058J | 0.074 | 0.24 | 0.20 | <0.025 | <0.025 | 0.043J | 0.054J | <0.025 | <0.025 |
| 1,2,3-Trichlorobenzene | 62.6 | 934 | --- | --- | <2.0 | <0.12 | <0.025 | <0.025 | <0.025 | <0.025 | <0.025 | <0.025 | <0.025 | <0.025 | <0.025 | <0.025 | <0.025 |
| 1,2,4-Trichlorobenzene | 24 | 113 | 0.408 | --- | <3.8 | <0.24 | <0.048 | <0.048 | <0.048 | <0.048 | <0.048 | <0.048 | <0.048 | <0.048 | <0.048 | <0.048 | <0.048 |
| 1,1,1-Trichloroethane | 640 | 640 | 0.1402 | --- | **102** | **32.4** | **0.51** | <0.025 | **0.56** | **0.39** | 0.080 | <0.025 | <0.025 | <0.025 | <0.025 | <0.025 | <0.025 |
| 1,1,2-Trichloroethane | 1.59 | 7.01 | 0.0032 | --- | <2.0 | <0.12 | <0.025 | <0.025 | <0.025 | <0.025 | <0.025 | <0.025 | <0.025 | <0.025 | <0.025 | <0.025 | <0.025 |
| Trichloroethene | 1.3 | 8.41 | 0.0036 | --- | **458** | **7.7** | **6.3** | **0.038J** | **4.5** | **2.7** | **0.21** | **0.13** | <0.025 | <0.025 | <0.025 | **0.65** | **0.054J** |
| Trichlorofluoromethane | 1,230 | 1230 | 4.4758 | --- | <2.0 | <0.12 | <0.025 | <0.025 | <0.025 | <0.025 | <0.025 | <0.025 | <0.025 | <0.025 | <0.025 | <0.025 | <0.025 |
| 1,2,3-Trimethylbenzene | 182 | 182 | --- | --- | NA | NA | NA | NA | NA | NA | NA | NA | NA | NA | NA | NA | NA |
| 1,2,4-Trimethylbenzene | 219 | 219 | --- | --- | <2.0 | <0.12 | 0.058J | <0.025 | 0.043J | 0.16 | 0.045J | <0.025 | <0.025 | 0.048J | 0.064J | <0.025 | <0.025 |
| 1,3,5-Trimethylbenzene | 182 | 182 | --- | --- | <2.0 | <0.12 | 0.039J | <0.025 | <0.025 | 0.037J | <0.025 | <0.025 | <0.025 | 0.029J | 0.028J | <0.025 | <0.025 |
| Trimethylbenzenes | --- | --- | 1.3821 | --- | <2.0 | <0.12 | 0.097 | <0.025 | 0.043 | 0.197 | 0.045 | <0.025 | <0.025 | 0.077 | 0.092 | <0.025 | <0.025 |
| Vinyl Chloride | 0.067 | 2.08 | 0.0001 | --- | <2.0 | **0.16J** | <0.025 | <0.025 | <0.025 | <0.025 | <0.025 | <0.025 | <0.025 | <0.025 | <0.025 | <0.025 | <0.025 |
| m&p-Xylene | --- | --- | --- | --- | <4.0 | <0.25 | 0.13J | <0.050 | 0.086J | 0.31 | 0.12J | <0.050 | <0.050 | 0.11J | 0.14 | <0.050 | <0.050 |
| o-Xylene | --- | --- | --- | --- | <2.0 | <0.12 | 0.12 | <0.025 | 0.058J | 0.24 | 0.042J | <0.025 | <0.025 | <0.025 | 0.058J | <0.025 | <0.025 |
| Xylenes | 260 | 260 | 3.96 | --- | <4.0 | <0.25 | 0.25 | <0.050 | 0.144 | 0.55 | 0.162 | <0.050 | <0.050 | 0.11 | 0.198 | <0.050 | <0.050 |

**Table 1. Soil Analytical Results**

**Former Wayne Pigment Corp, 300 Barclay Street and 139 Oregon Street, Milwaukee, Wisconsin**

| PARAMETERS | Non-Industrial Direct Contact Residual Contaminant Level | Industrial Direct Contact RCL (mg/kg) | Protection of Groundwater Residual Contaminant Level | Background Threshold Value | Sample ID | | | | | | | | | | | | |
|---|---|---|---|---|---|---|---|---|---|---|---|---|---|---|---|---|---|
| | | | | | SB-69 | | SB-70 | | SB-71 | | SB-75 | SB-76 | SB-77 | SB-78 | SB-79 | SB-80 | |
| Date Collected | | | | | 9/16/2016 | 9/16/2016 | 9/16/2016 | 9/16/2016 | 9/16/2016 | 9/16/2016 | 9/16/2016 | 9/16/2016 | 9/16/2016 | 9/16/2016 | 9/16/2016 | 9/16/2016 | 9/16/2016 |
| Depth (feet bgs) | | | | | 0-2 | 4-6 | 0-2 | 6-8 | 2-4 | 4-6 | 0-2 | 0-2 | 0-2 | 0-2 | 0-2 | 0-2 | 8-10 |
| Saturated(s)/Unsaturated(u) | | | | | u | s | u | s | u | s | u | u | u | u | u | u | s |
| **Metals (mg/kg)** | | | | | | | | | | | | | | | | | |
| Arsenic | 0.677 | 3 | 0.584 | 8.0 | NA | NA | NA | NA | NA | NA | NA | NA | NA | NA | NA | NA | NA |
| Barium | 15,300 | 100,000 | 164.8 | 364 | NA | NA | NA | NA | NA | NA | NA | NA | NA | NA | NA | NA | NA |
| Cadmium | 71 | 985 | 0.752 | 1.0 | NA | NA | NA | NA | NA | NA | NA | NA | NA | NA | NA | NA | NA |
| Chromium | --- | --- | 360,000 | 44 | NA | NA | NA | NA | NA | NA | NA | NA | NA | NA | NA | NA | NA |
| Trivalent Chromium | 100,000 | 100,000 | --- | --- | NA | NA | NA | NA | NA | NA | NA | NA | NA | NA | NA | NA | NA |
| Hexavalent Chromium | 0.301 | 6 | --- | --- | NA | NA | NA | NA | NA | NA | NA | NA | NA | NA | NA | NA | NA |
| Lead | 400 | 800 | 27 | 52 | NA | NA | NA | NA | NA | NA | NA | NA | NA | NA | NA | NA | NA |
| Mercury | 3.13 | 3.13 | 0.208 | --- | NA | NA | NA | NA | NA | NA | NA | NA | NA | NA | NA | NA | NA |
| Selenium | 391 | 5,840 | 0.52 | --- | NA | NA | NA | NA | NA | NA | NA | NA | NA | NA | NA | NA | NA |
| Silver | 391 | 5,840 | 0.8491 | --- | NA | NA | NA | NA | NA | NA | NA | NA | NA | NA | NA | NA | NA |
| **PAHs (mg/kg)** | | | | | | | | | | | | | | | | | |
| Acenaphthene | 3,590 | 45,200 | --- | --- | NA | NA | NA | NA | NA | NA | NA | NA | NA | NA | NA | NA | NA |
| Acenaphthylene | --- | --- | --- | --- | NA | NA | NA | NA | NA | NA | NA | NA | NA | NA | NA | NA | NA |
| Anthracene | 17,200 | 100,000 | 196.9492 | --- | NA | NA | NA | NA | NA | NA | NA | NA | NA | NA | NA | NA | NA |
| Benzo(a)anthracene | 1.14 | 20.8 | --- | --- | NA | NA | NA | NA | NA | NA | NA | NA | NA | NA | NA | NA | NA |
| Benzo(a)pyrene | 0.115 | 2.11 | 0.470 | --- | NA | NA | NA | NA | NA | NA | NA | NA | NA | NA | NA | NA | NA |
| Benzo(b)fluoranthene | 1.15 | 21.1 | 0.4793 | --- | NA | NA | NA | NA | NA | NA | NA | NA | NA | NA | NA | NA | NA |
| Benzo(g,h,i)perylene | --- | --- | --- | --- | NA | NA | NA | NA | NA | NA | NA | NA | NA | NA | NA | NA | NA |
| Benzo(k)fluoranthene | 11.5 | 211 | --- | --- | NA | NA | NA | NA | NA | NA | NA | NA | NA | NA | NA | NA | NA |
| Chrysene | 115 | 2,110 | 0.1446 | --- | NA | NA | NA | NA | NA | NA | NA | NA | NA | NA | NA | NA | NA |
| Dibenzo(a,h)anthracene | 0.115 | 2.11 | --- | --- | NA | NA | NA | NA | NA | NA | NA | NA | NA | NA | NA | NA | NA |
| Fluoranthene | 2,390 | 30,100 | 88.8778 | --- | NA | NA | NA | NA | NA | NA | NA | NA | NA | NA | NA | NA | NA |
| Fluorene | 2,390 | 30,100 | 14.8299 | --- | NA | NA | NA | NA | NA | NA | NA | NA | NA | NA | NA | NA | NA |
| Indeno(1,2,3-cd)pyrene | 1.15 | 21.1 | --- | --- | NA | NA | NA | NA | NA | NA | NA | NA | NA | NA | NA | NA | NA |
| 1-methyl naphthalene | 17.6 | 72.7 | --- | --- | NA | NA | NA | NA | NA | NA | NA | NA | NA | NA | NA | NA | NA |
| 2-methyl naphthalene | 239 | 3,010 | --- | --- | NA | NA | NA | NA | NA | NA | NA | NA | NA | NA | NA | NA | NA |
| Naphthalene | 5.52 | 24.1 | 0.6582 | --- | NA | NA | NA | NA | NA | NA | NA | NA | NA | NA | NA | NA | NA |
| Phenanthrene | --- | --- | --- | --- | NA | NA | NA | NA | NA | NA | NA | NA | NA | NA | NA | NA | NA |
| Pyrene | 1,790 | 22,600 | 54.5455 | --- | NA | NA | NA | NA | NA | NA | NA | NA | NA | NA | NA | NA | NA |
| Total Dectected PAHs | --- | --- | --- | --- | NA | NA | NA | NA | NA | NA | NA | NA | NA | NA | NA | NA | NA |

Bold values exceed protection of groundwater residual contaminant level
Boxed values exceed non-industrial direct contact residual contaminant level
Underlined values exceeded the background threshold value
Metals that exceed the background threshold values are compared to residual contaminant levels
--- - no standard established
B - Compound was found in the blank and sample
F1 - matrix spike and/or matrix spike duplicate recovery is outside acceptance limits
F2 - matrix spike/matrix spike duplicate relative percent difference exceeds control limits

J - Results between laboratory limit of detection and limit of quanitification
bgs - below ground surface
NA - not analyzed or not available
ND - not detected
mg/kg - milligrams per kilogram
PAHs - polynuclear aromatic hydrocarbons
TCLP - toxicity characteristic leaching procedure
VOCs - volatile organic compounds

**Table 1. Soil Analytical Results**

**Former Wayne Pigment Corp, 300 Barclay Street and 139 Oregon Street, Milwaukee, Wisconsin**

| PARAMETERS | Non-Industrial Direct Contact Residual Contaminant Level | Industrial Direct Contact RCL (mg/kg) | Protection of Groundwater Residual Contaminant Level | Background Threshold Value | Sample ID | | | | | | | | | | | | |
|---|---|---|---|---|---|---|---|---|---|---|---|---|---|---|---|---|---|
| | | | | | SB-81 | | SB-82 | | SB-83 | | | SB-84 | | | SB-85 | | |
| Date Collected | | | | | 9/16/2016 | 9/16/2016 | 9/20/2016 | 9/20/2016 | 9/20/2016 | 9/20/2016 | 9/20/2016 | 9/20/2016 | 9/20/2016 | 9/20/2016 | 9/20/2016 | 9/20/2016 | 9/20/2016 |
| Depth (feet bgs) | | | | | 2-4 | 6-8 | 0-2 | 6-8 | 2-4 | 6-8 | 10-12 | 0-2 | 6-8 | 10-12 | 0-2 | 8-10 | 10-12 |
| Saturated(s)/Unsaturated(u) | | | | | u | u | u | u | u | u | s | u | u | s | u | u | s |
| **VOCs (mg/kg)** | | | | | | | | | | | | | | | | | |
| Benzene | 1.6 | 7.07 | 0.0051 | --- | <0.025 | <0.20 | <0.23 | <1.2 | <0.025 | <0.50 | <0.62 | <0.025 | <0.10 | <0.12 | <0.025 | <0.062 | <0.025 |
| Bromobenzene | 342 | 679 | --- | --- | <0.025 | <0.20 | <0.23 | <1.2 | <0.025 | <0.50 | <0.62 | <0.025 | <0.10 | <0.12 | <0.025 | <0.062 | <0.025 |
| Bromomethane | 9.6 | 43 | 0.0051 | --- | <0.070 | <0.56 | <0.64 | <3.5 | <0.070 | <1.4 | <1.7 | <0.070 | <0.28 | <0.35 | <0.070 | <0.17 | <0.070 |
| n-Butylbenzene | 108 | 108 | --- | --- | <0.025 | 2.2 | <0.23 | 78.2 | <0.025 | 39.6 | 32.9 | <0.025 | 1.3 | 5.4 | <0.025 | 3.2 | 0.26 |
| sec-Butylbenzene | 145 | 145 | --- | --- | <0.025 | 2.7 | 0.68J | 36.6 | <0.025 | 33.3 | 26.1 | <0.025 | 0.99 | 4.4 | <0.025 | 2.4 | 0.25 |
| tert-Butylbenzene | 183 | 183 | --- | --- | <0.025 | <0.20 | <0.23 | <1.2 | <0.025 | <0.50 | <0.62 | <0.025 | <0.10 | 0.44 | <0.025 | <0.062 | 0.043J |
| Chlorobenzene | 370 | 761 | --- | --- | <0.025 | <0.20 | <0.23 | <1.2 | <0.025 | <0.50 | <0.62 | <0.025 | <0.10 | <0.12 | <0.025 | <0.062 | <0.025 |
| Chloroethane | --- | --- | 0.2266 | --- | <0.067 | <0.54 | <0.62 | <3.4 | <0.067 | <1.3 | <1.7 | <0.067 | <0.27 | <0.34 | <0.067 | <0.17 | <0.067 |
| Chloroform | 0.454 | 1.98 | 0.0033 | --- | <0.046 | <0.37 | <0.43 | <2.3 | <0.046 | <0.93 | <1.2 | <0.046 | <0.19 | <0.23 | <0.046 | <0.12 | <0.046 |
| 1,1-Dichloroethane | 5.06 | 22.2 | 0.4828 | --- | <0.025 | <0.20 | <0.23 | <1.2 | <0.025 | <0.50 | <0.62 | <0.025 | <0.10 | <0.12 | <0.025 | <0.062 | <0.025 |
| 1,2-Dichloroethane | 0.652 | 2.87 | 0.0028 | --- | <0.025 | <0.20 | <0.23 | <1.2 | <0.025 | <0.50 | <0.62 | <0.025 | <0.10 | <0.12 | <0.025 | <0.062 | <0.025 |
| 1,1-Dichloroethene | 320 | 1,190 | 0.005 | --- | <0.025 | <0.20 | <0.23 | <1.2 | <0.025 | <0.50 | <0.62 | <0.025 | <0.10 | <0.12 | <0.025 | <0.062 | <0.025 |
| cis-1,2-Dichloroethene | 156 | 2340 | 0.0412 | --- | <0.025 | <0.20 | <0.23 | <1.2 | <0.025 | <0.50 | <0.62 | <0.025 | <0.10 | <0.12 | <0.025 | <0.062 | <0.025 |
| trans-1,2-Dichloroethene | 1,560 | 1850 | 0.0626 | --- | <0.025 | <0.20 | <0.23 | <1.2 | <0.025 | <0.50 | <0.62 | <0.025 | <0.10 | <0.12 | <0.025 | <0.062 | <0.025 |
| Di-isopropyl ether | 2,260 | 2260 | --- | --- | <0.025 | <0.20 | <0.23 | <1.2 | <0.025 | <0.50 | <0.62 | <0.025 | <0.10 | <0.12 | <0.025 | <0.062 | <0.025 |
| Ethylbenzene | 8.03 | 35.4 | 1.57 | --- | 0.075 | 0.40J | **8.3** | **1,050** | <0.025 | **4.4** | 1.0J | 0.077J | 0.15J | <0.12 | <0.025 | 0.12J | <0.025 |
| Hexachlorobutadiene | 1.63 | 7.49 | --- | --- | <0.025 | <0.20 | <0.23 | <1.2 | <0.025 | <0.50 | <0.62 | <0.025 | <0.10 | <0.12 | <0.025 | <0.062 | <0.025 |
| Isopropylbenzene | --- | --- | --- | --- | <0.025 | 6.3 | 3.4 | 354 | <0.025 | 208 | 30.6 | 0.044J | 7.4 | 9.5 | 0.042J | 5.4 | 1.1 |
| p-Isopropyltoluene | 162 | 162 | --- | --- | <0.025 | 7.6 | 1.1J | 70.6 | <0.025 | 1.8J | 47.1 | 0.050J | 0.28J | 0.58 | <0.025 | 0.44 | <0.025 |
| 2-Butanone (MEK) | 28,400 | 28,400 | 1.6661 | --- | NA | NA | NA | NA | NA | NA | NA | NA | NA | NA | NA | NA | NA |
| Methylene chloride | 61.8 | 1150 | 0.0026 | --- | <0.025 | <0.20 | <0.23 | <1.2 | <0.025 | <0.50 | <0.62 | <0.025 | <0.10 | <0.12 | <0.025 | <0.062 | <0.025 |
| Naphthalene | 5.52 | 24.1 | 0.6582 | --- | <0.040 | **2.6** | **8.2** | **65.4** | 0.30J | **8.3J** | **18.7** | 0.082J | **0.76J** | <0.20 | 0.045J | **1.1** | 0.087J |
| n-Propylbenzene | --- | --- | --- | --- | <0.025 | 5.2 | <0.23 | 127 | <0.025 | 60.0 | 53.3 | <0.025 | 1.4 | 5.6 | <0.025 | 4.5 | 0.75 |
| Styrene | 867 | 867 | 0.22 | --- | <0.025 | <0.20 | <0.23 | <1.2 | <0.025 | <0.50 | <0.62 | <0.025 | <0.10 | <0.12 | <0.025 | <0.062 | <0.025 |
| Tetrachloroethene | 33 | 145 | 0.0045 | --- | <0.025 | <0.20 | <0.23 | <1.2 | <0.025 | <0.50 | <0.62 | <0.025 | <0.10 | <0.12 | <0.025 | <0.062 | <0.025 |
| Toluene | 818 | 818 | 1.1072 | --- | 0.033J | <0.20 | **4.9** | **595** | 0.15J | <0.50 | <0.62 | 0.043J | <0.10 | <0.12 | <0.025 | 0.076J | <0.025 |
| 1,2,3-Trichlorobenzene | 62.6 | 934 | --- | --- | <0.025 | <0.20 | <0.23 | <1.2 | <0.025 | <0.50 | <0.62 | <0.025 | <0.10 | <0.12 | <0.025 | <0.062 | <0.025 |
| 1,2,4-Trichlorobenzene | 24 | 113 | 0.408 | --- | <0.048 | <0.38 | <0.44 | <2.4 | <0.048 | <0.95 | <1.2 | <0.048 | <0.19 | <0.24 | <0.048 | <0.12 | <0.048 |
| 1,1,1-Trichloroethane | 640 | 640 | 0.1402 | --- | <0.025 | <0.20 | <0.23 | <1.2 | <0.025 | <0.50 | <0.62 | <0.025 | <0.10 | <0.12 | <0.025 | <0.062 | <0.025 |
| 1,1,2-Trichloroethane | 1.59 | 7.01 | 0.0032 | --- | <0.025 | <0.20 | <0.23 | <1.2 | <0.025 | <0.50 | <0.62 | <0.025 | <0.10 | <0.12 | <0.025 | <0.062 | <0.025 |
| Trichloroethene | 1.3 | 8.41 | 0.0036 | --- | **0.047J** | **0.28J** | <0.23 | <1.2 | <0.025 | <0.50 | <0.62 | <0.025 | <0.10 | <0.12 | <0.025 | <0.062 | <0.025 |
| Trichlorofluoromethane | 1,230 | 1230 | 4.4758 | --- | <0.025 | <0.20 | <0.23 | <1.2 | <0.025 | <0.50 | <0.62 | <0.025 | <0.10 | <0.12 | <0.025 | <0.062 | <0.025 |
| 1,2,3-Trimethylbenzene | 182 | 182 | --- | --- | NA | NA | NA | NA | NA | NA | NA | NA | NA | NA | NA | NA | NA |
| 1,2,4-Trimethylbenzene | 219 | 219 | --- | --- | 0.054J | 35.2 | 24.1 | 926 | <0.025 | 28.6 | 434 | 0.30 | 1.2 | 2.0 | <0.025 | 28.2 | 0.046J |
| 1,3,5-Trimethylbenzene | 182 | 182 | --- | --- | <0.025 | 3.6 | 77.9 | 387 | <0.025 | 3.4 | <0.62 | 0.14 | 0.21J | 0.31J | <0.025 | 0.81 | <0.025 |
| Trimethylbenzenes | --- | --- | 1.3821 | --- | 0.054 | 38.8 | **102.0** | **1,313** | <0.025 | **32.0** | **434** | 0.44 | **1.41** | **2.31** | <0.025 | **29.01** | 0.046 |
| Vinyl Chloride | 0.067 | 2.08 | 0.0001 | --- | <0.025 | <0.20 | <0.23 | <1.2 | <0.025 | <0.50 | <0.62 | <0.025 | <0.10 | <0.12 | <0.025 | <0.062 | <0.025 |
| m&p-Xylene | --- | --- | --- | --- | 0.18 | 12.3 | 61.2 | 6,070 | 0.21J | 26.7 | 30.4 | 0.44 | 1.4 | 0.62J | 0.065J | 2.2 | <0.050 |
| o-Xylene | --- | --- | --- | --- | 0.11 | 0.63 | 34.2 | 1,910 | <0.025 | 2.2J | <0.62 | 0.15 | 0.14J | <0.12 | <0.025 | <0.062 | <0.025 |
| Xylenes | 260 | 260 | 3.96 | --- | 0.29 | **12.93** | **95.4** | **7,980** | 0.021 | **28.9** | **30.4** | 0.59 | 1.54 | 0.62 | 0.065 | 2.2 | <0.050 |

**Table 1. Soil Analytical Results**

**Former Wayne Pigment Corp, 300 Barclay Street and 139 Oregon Street, Milwaukee, Wisconsin**

| PARAMETERS | Non-Industrial Direct Contact Residual Contaminant Level | Industrial Direct Contact RCL (mg/kg) | Protection of Groundwater Residual Contaminant Level | Background Threshold Value | Sample ID | | | | | | | | | | | | |
|---|---|---|---|---|---|---|---|---|---|---|---|---|---|---|---|---|---|
| | | | | | SB-81 | | SB-82 | | SB-83 | | | SB-84 | | | SB-85 | | |
| Date Collected | | | | | 9/16/2016 | 9/16/2016 | 9/20/2016 | 9/20/2016 | 9/20/2016 | 9/20/2016 | 9/20/2016 | 9/20/2016 | 9/20/2016 | 9/20/2016 | 9/20/2016 | 9/20/2016 | 9/20/2016 |
| Depth (feet bgs) | | | | | 2-4 | 6-8 | 0-2 | 6-8 | 2-4 | 6-8 | 10-12 | 0-2 | 6-8 | 10-12 | 0-2 | 8-10 | 10-12 |
| Saturated(s)/Unsaturated(u) | | | | | u | u | u | u | u | u | s | u | u | s | u | u | s |
| **Metals (mg/kg)** | | | | | | | | | | | | | | | | | |
| Arsenic | 0.677 | 3 | 0.584 | 8.0 | **55.5** | **18.0** | **56,000** | **16,900** | **410** | **129** | **387** | **13,200** | **16.5** | **33.7** | **10.7** | **397** | **9.6** |
| Barium | 15,300 | 100,000 | 164.8 | 364 | 99.1 | **1,500** | **3,550** | **4,810** | 224 | 118 | 95.8 | **1,520** | 70.5 | 30.6 | 24.8 | 68.2 | 53.6 |
| Cadmium | 71 | 985 | 0.752 | 1.0 | **7.2** | **2.6** | **119** | **39.9** | **4.5** | 0.52J | 0.62J | **41.4** | **1.4** | 0.19J | <0.071 | 0.14J | 0.22J |
| Chromium | --- | --- | 360,000 | 44 | 310 | 1600 | 300B | 96B | 32B | 8.0B | 610B | 110B | 57B | 16B | 32B | 13B | 13B |
| Trivalent Chromium | 100,000 | 100,000 | --- | --- | 290 | 1500 | 290 | 96 | 32 | 8.0 | 610 | 100 | 56 | 16 | 31 | 13 | 13 |
| Hexavalent Chromium | 0.301 | 6 | --- | --- | 11 | 15 | 5.8 F1,F2 | <0.39 | <0.37 | <0.41 | <0.39 | 4.9 | 0.37J | <0.40 | 0.78J | <0.37 | <0.39 |
| Lead | 400 | 800 | 27 | 52 | **400** | **1,940** | **22,300** | **15,600** | **152** | **135** | **54.6** | **2,790** | **151** | **72.8** | 26.2 | 13.4 | 9.3 |
| Mercury | 3.13 | 3.13 | 0.208 | --- | **0.40** | **1.8** | **2.3** | **1.0** | 0.16J | **0.22J** | <0.048 | <0.048 | 0.079J | <0.042 | `<0.039 | 0.057J | <0.041 |
| Selenium | 391 | 5,840 | 0.52 | --- | **1.4J** | **3.3** | **15.3** | **48.8** | <2.8 | **3.8J** | **0.99J** | **8.7** | <0.93 | <0.79 | <0.83 | <0.75 | <0.89 |
| Silver | 391 | 5,840 | 0.8491 | --- | 0.49J | **0.98J** | **1.5J** | <1.0 | <1.0 | <0.62 | <0.35 | <0.37 | <0.34 | <0.29 | <0.30 | <0.27 | <0.32 |
| **PAHs (mg/kg)** | | | | | | | | | | | | | | | | | |
| Acenaphthene | 3,590 | 45,200 | --- | --- | NA | NA | NA | NA | NA | NA | NA | NA | NA | NA | NA | NA | NA |
| Acenaphthylene | --- | --- | --- | --- | NA | NA | NA | NA | NA | NA | NA | NA | NA | NA | NA | NA | NA |
| Anthracene | 17,200 | 100,000 | 196.9492 | --- | NA | NA | NA | NA | NA | NA | NA | NA | NA | NA | NA | NA | NA |
| Benzo(a)anthracene | 1.14 | 20.8 | --- | --- | NA | NA | NA | NA | NA | NA | NA | NA | NA | NA | NA | NA | NA |
| Benzo(a)pyrene | 0.115 | 2.11 | 0.470 | --- | NA | NA | NA | NA | NA | NA | NA | NA | NA | NA | NA | NA | NA |
| Benzo(b)fluoranthene | 1.15 | 21.1 | 0.4793 | --- | NA | NA | NA | NA | NA | NA | NA | NA | NA | NA | NA | NA | NA |
| Benzo(g,h,i)perylene | --- | --- | --- | --- | NA | NA | NA | NA | NA | NA | NA | NA | NA | NA | NA | NA | NA |
| Benzo(k)fluoranthene | 11.5 | 211 | --- | --- | NA | NA | NA | NA | NA | NA | NA | NA | NA | NA | NA | NA | NA |
| Chrysene | 115 | 2,110 | 0.1446 | --- | NA | NA | NA | NA | NA | NA | NA | NA | NA | NA | NA | NA | NA |
| Dibenzo(a,h)anthracene | 0.115 | 2.11 | --- | --- | NA | NA | NA | NA | NA | NA | NA | NA | NA | NA | NA | NA | NA |
| Fluoranthene | 2,390 | 30,100 | 88.8778 | --- | NA | NA | NA | NA | NA | NA | NA | NA | NA | NA | NA | NA | NA |
| Fluorene | 2,390 | 30,100 | 14.8299 | --- | NA | NA | NA | NA | NA | NA | NA | NA | NA | NA | NA | NA | NA |
| Indeno(1,2,3-cd)pyrene | 1.15 | 21.1 | --- | --- | NA | NA | NA | NA | NA | NA | NA | NA | NA | NA | NA | NA | NA |
| 1-methyl naphthalene | 17.6 | 72.7 | --- | --- | NA | NA | NA | NA | NA | NA | NA | NA | NA | NA | NA | NA | NA |
| 2-methyl naphthalene | 239 | 3,010 | --- | --- | NA | NA | NA | NA | NA | NA | NA | NA | NA | NA | NA | NA | NA |
| Naphthalene | 5.52 | 24.1 | 0.6582 | --- | NA | NA | NA | NA | NA | NA | NA | NA | NA | NA | NA | NA | NA |
| Phenanthrene | --- | --- | --- | --- | NA | NA | NA | NA | NA | NA | NA | NA | NA | NA | NA | NA | NA |
| Pyrene | 1,790 | 22,600 | 54.5455 | --- | NA | NA | NA | NA | NA | NA | NA | NA | NA | NA | NA | NA | NA |
| Total Dectected PAHs | --- | --- | --- | --- | NA | NA | NA | NA | NA | NA | NA | NA | NA | NA | NA | NA | NA |

Bold values exceed protection of groundwater residual contaminant level
Boxed values exceed non-industrial direct contact residual contaminant level
Underlined values exceeded the background threshold value
Metals that exceed the background threshold values are compared to residual contaminant levels
--- - no standard established
B - Compound was found in the blank and sample
F1 - matrix spike and/or matrix spike duplicate recovery is outside acceptance limits
F2 - matrix spike/matrix spike duplicate relative percent difference exceeds control limits

J - Results between laboratory limit of detection and limit of quanitification
bgs - below ground surface
NA - not analyzed or not available
ND - not detected
mg/kg - milligrams per kilogram
PAHs - polynuclear aromatic hydrocarbons
TCLP - toxicity characteristic leaching procedure
VOCs - volatile organic compounds

**Table 1. Soil Analytical Results**

**Former Wayne Pigment Corp, 300 Barclay Street and 139 Oregon Street, Milwaukee, Wisconsin**

| PARAMETERS | Non-Industrial Direct Contact Residual Contaminant Level | Industrial Direct Contact RCL (mg/kg) | Protection of Groundwater Residual Contaminant Level | Background Threshold Value | Sample ID | | | | | | | | | | | | |
|---|---|---|---|---|---|---|---|---|---|---|---|---|---|---|---|---|---|
| | | | | | SB-86 | | SB-87 | | SB-88 | | SB-89 | | V-1 | | V-2 | | |
| Date Collected | | | | | 9/21/2016 | 9/22/2016 | 9/20/2016 | 9/20/2016 | 9/20/2016 | 9/20/2016 | 9/20/2016 | 9/20/2016 | 2/13/2017 | 2/13/2017 | 2/13/2017 | 2/13/2017 | 2/13/2017 |
| Depth (feet bgs) | | | | | 2-4 | 4-6 | 2-4 | 4-6 | 2-4 | 10-12 | 2-4 | 8-10 | 4-6 | 6-8 | 3-5 | 4-6 | 6-8 |
| Saturated(s)/Unsaturated(u) | | | | | u | u | u | u | u | u | u | s | s | s | u | s | s |
| **VOCs (mg/kg)** | | | | | | | | | | | | | | | | | |
| Benzene | 1.6 | 7.07 | 0.0051 | --- | <2.0 | <2.5 | <0.025 | <0.025 | **0.21J** | <0.50 | <0.025 | <0.025 | <0.011 | <0.017 | NA | **0.035** | **0.12** |
| Bromobenzene | 342 | 679 | --- | --- | <2.0 | <2.5 | <0.025 | <0.025 | <0.12 | <0.50 | <0.025 | <0.025 | <0.026* | <0.041* | NA | <0.025* | <0.054* |
| Bromomethane | 9.6 | 43 | 0.0051 | --- | <5.6 | <7.0 | <0.070 | <0.070 | <0.35 | <1.4 | <0.070 | <0.070 | <0.059 | <0.092 | NA | <0.056 | <0.12 |
| n-Butylbenzene | 108 | 108 | --- | --- | 21.0 | 34.2 | <0.025 | <0.025 | 8.0 | <0.50 | <0.025 | <0.025 | 0.15 | 3.1 | NA | 1.3 | 6.9 |
| sec-Butylbenzene | 145 | 145 | --- | --- | 11.8 | 18.7 | <0.025 | <0.025 | 4.6 | <0.50 | <0.025 | <0.025 | <0.030 | 1.9 | NA | 0.27 | 5.6 |
| tert-Butylbenzene | 183 | 183 | --- | --- | <2.0 | <2.5 | <0.025 | <0.025 | <0.12 | <0.50 | <0.025 | <0.025 | <0.030 | 0.25 | NA | 0.046 J | 0.48 |
| Chlorobenzene | 370 | 761 | --- | --- | <2.0 | <2.5 | <0.025 | <0.025 | <0.12 | <0.50 | <0.025 | <0.025 | <0.029 | <0.045 | NA | <0.027 | <0.058 |
| Chloroethane | --- | --- | 0.2266 | --- | <5.4 | <6.7 | <0.067 | <0.067 | <0.34 | <1.3 | <0.067 | <0.067 | <0.038 | <0.058 | NA | <0.036 | <0.076 |
| Chloroform | 0.454 | 1.98 | 0.0033 | --- | <3.7 | <4.6 | <0.046 | <0.046 | <0.23 | <0.93 | <0.046 | <0.046 | <0.028 | <0.043 | NA | <0.026 | <0.056 |
| 1,1-Dichloroethane | 5.06 | 22.2 | 0.4828 | --- | <2.0 | <2.5 | <0.025 | <0.025 | <0.12 | <0.50 | <0.025 | <0.025 | <0.031 | <0.048 | NA | <0.029 | <0.062 |
| 1,2-Dichloroethane | 0.652 | 2.87 | 0.0028 | --- | <2.0 | <2.5 | <0.025 | <0.025 | <0.12 | <0.50 | <0.025 | <0.025 | <0.029 | <0.045 | NA | <0.028 | <0.059 |
| 1,1-Dichloroethene | 320 | 1,190 | 0.005 | --- | <2.0 | <2.5 | <0.025 | <0.025 | <0.12 | <0.50 | <0.025 | <0.025 | <0.029 | <0.045 | NA | <0.028 | <0.059 |
| cis-1,2-Dichloroethene | 156 | 2340 | 0.0412 | --- | <2.0 | <2.5 | <0.025 | <0.025 | <0.12 | <0.50 | <0.025 | <0.025 | <0.030 | <0.047 | NA | <0.029 | <0.061 |
| trans-1,2-Dichloroethene | 1,560 | 1850 | 0.0626 | --- | <2.0 | <2.5 | <0.025 | <0.025 | <0.12 | <0.50 | <0.025 | <0.025 | <0.026 | <0.041 | NA | <0.025 | <0.053 |
| Di-isopropyl ether | 2,260 | 2260 | --- | --- | <2.0 | <2.5 | <0.025 | <0.025 | <0.12 | <0.50 | <0.025 | <0.025 | <0.021 | <0.032 | NA | <0.019 | <0.041 |
| Ethylbenzene | 8.03 | 35.4 | 1.57 | --- | **639** | **967** | 0.13 | <0.025 | **9.3** | 0.91J | <0.025 | <0.025 | 0.050 | 0.59 | NA | 0.25 | **15** |
| Hexachlorobutadiene | 1.63 | 7.49 | --- | --- | <2.0 | <2.5 | <0.025 | <0.025 | <0.12 | <0.50 | <0.025 | <0.025 | <0.033 | <0.052 | NA | <0.031 | <0.067 |
| Isopropylbenzene | --- | --- | --- | --- | 60.3 | 105 | <0.025 | <0.025 | 43.4 | <0.50 | <0.025 | <0.025 | 0.078 | 1.2 | NA | 0.29 | 5.5 |
| p-Isopropyltoluene | 162 | 162 | --- | --- | 12.3 | 20.5 | <0.025 | <0.025 | 4.2 | <0.50 | <0.025 | <0.025 | <0.027 | 1.8 | NA | <0.026 | 5.0 |
| 2-Butanone (MEK) | 28,400 | 28,400 | 1.6661 | --- | NA | NA | NA | NA | NA | NA | NA | NA | NA | NA | NA | NA | NA |
| Methylene chloride | 61.8 | 1150 | 0.0026 | --- | <2.0 | <2.5 | <0.025 | <0.025 | <0.12 | <0.50 | <0.025 | <0.025 | <0.12 | <0.19 | NA | <0.12 | <0.25 |
| Naphthalene | 5.52 | 24.1 | 0.6582 | --- | **23.2** | **38.8** | 0.13J | <0.040 | **2.3** | <0.80 | 0.33 | <0.040 | 0.20 | 0.33 | NA | **1.3** | **1.0** |
| n-Propylbenzene | --- | --- | --- | --- | 52.6 | 79.8 | 0.034J | <0.025 | 9.3 | <0.50 | <0.025 | <0.025 | 0.15 | 2.8 | NA | 0.41 | 10 |
| Styrene | 867 | 867 | 0.22 | --- | <2.0 | <2.5 | <0.025 | <0.025 | <0.12 | <0.50 | <0.025 | <0.025 | <0.029 | <0.045 | NA | <0.027 | <0.058 |
| Tetrachloroethene | 33 | 145 | 0.0045 | --- | <2.0 | <2.5 | <0.025 | <0.025 | <0.12 | <0.50 | <0.025 | <0.025 | **0.050 J** | <0.043 | NA | <0.026 | <0.056 |
| Toluene | 818 | 818 | 1.1072 | --- | **581** | **886** | 0.25 | <0.025 | 0.32J | **4.1** | <0.025 | <0.025 | 0.030 | 0.088 | NA | 0.019 | **25** |
| 1,2,3-Trichlorobenzene | 62.6 | 934 | --- | --- | <2.0 | <2.5 | <0.025 | <0.025 | <0.12 | <0.50 | <0.025 | <0.025 | <0.034 | <0.053 | NA | <0.032 | <0.069 |
| 1,2,4-Trichlorobenzene | 24 | 113 | 0.408 | --- | <3.8 | <4.8 | <0.048 | <0.048 | <0.24 | <0.95 | <0.048 | <0.048 | <0.025 | <0.040 | NA | <0.024 | <0.051 |
| 1,1,1-Trichloroethane | 640 | 640 | 0.1402 | --- | <2.0 | <2.5 | <0.025 | <0.025 | <0.12 | <0.50 | <0.025 | <0.025 | <0.028 | <0.044 | NA | <0.027 | <0.057 |
| 1,1,2-Trichloroethane | 1.59 | 7.01 | 0.0032 | --- | <2.0 | <2.5 | <0.025 | <0.025 | <0.12 | <0.50 | <0.025 | <0.025 | <0.026* | <0.041* | NA | <0.025* | <0.053* |
| Trichloroethene | 1.3 | 8.41 | 0.0036 | --- | <2.0 | <2.5 | <0.025 | <0.025 | <0.12 | <0.50 | <0.025 | <0.025 | **0.16** | <0.019 | NA | <0.012 | <0.025 |
| Trichlorofluoromethane | 1,230 | 1230 | 4.4758 | --- | <2.0 | <2.5 | <0.025 | <0.025 | <0.12 | <0.50 | <0.025 | <0.025 | <0.032 | <0.050 | NA | <0.030 | <0.064 |
| 1,2,3-Trimethylbenzene | 182 | 182 | --- | --- | NA | NA | NA | NA | NA | NA | NA | NA | NA | NA | NA | NA | NA |
| 1,2,4-Trimethylbenzene | 219 | 219 | --- | --- | 298 | 458 | 0.19 | <0.025 | 31.5 | <0.50 | <0.025 | <0.025 | 0.92 | 18 | NA | 0.51 | 52 |
| 1,3,5-Trimethylbenzene | 182 | 182 | --- | --- | 97.6 | 162 | 0.057J | <0.025 | 7.2 | <0.50 | <0.025 | <0.025 | 0.31 | 5.0 | NA | 0.14 | 16 |
| Trimethylbenzenes | --- | --- | 1.3821 | --- | **395.6** | **620** | 0.247 | <0.025 | **38.7** | <0.50 | <0.025 | <0.025 | 1.23 | **23** | NA | 0.65 | **68** |
| Vinyl Chloride | 0.067 | 2.08 | 0.0001 | --- | <2.0 | <2.5 | <0.025 | <0.025 | <0.12 | <0.50 | <0.025 | <0.025 | <0.020 | <0.030 | NA | <0.018 | <0.039 |
| m&p-Xylene | --- | --- | --- | --- | 2470 | 3730 | 0.51 | <0.050 | 76.5 | 3.5 | <0.050 | <0.050 | NA | NA | NA | NA | NA |
| o-Xylene | --- | --- | --- | --- | 795 | 1200 | 0.19 | <0.025 | 0.64 | 0.91J | <0.025 | <0.025 | NA | NA | NA | NA | NA |
| Xylenes | 260 | 260 | 3.96 | --- | **3,265** | **4,930** | 0.7 | <0.025 | **77.14** | **4.41** | <0.050 | <0.050 | 0.30 | **3.8** | NA | 1.2 | **120** |

**Table 1. Soil Analytical Results**

**Former Wayne Pigment Corp, 300 Barclay Street and 139 Oregon Street, Milwaukee, Wisconsin**

| PARAMETERS | Non-Industrial Direct Contact Residual Contaminant Level | Industrial Direct Contact RCL (mg/kg) | Protection of Groundwater Residual Contaminant Level | Background Threshold Value | Sample ID | | | | | | | | | | | | |
|---|---|---|---|---|---|---|---|---|---|---|---|---|---|---|---|---|---|
| | | | | | SB-86 | | SB-87 | | SB-88 | | SB-89 | | V-1 | | V-2 | | |
| Date Collected | | | | | 9/21/2016 | 9/22/2016 | 9/20/2016 | 9/20/2016 | 9/20/2016 | 9/20/2016 | 9/20/2016 | 9/20/2016 | 2/13/2017 | 2/13/2017 | 2/13/2017 | 2/13/2017 | 2/13/2017 |
| Depth (feet bgs) | | | | | 2-4 | 4-6 | 2-4 | 4-6 | 2-4 | 10-12 | 2-4 | 8-10 | 4-6 | 6-8 | 3-5 | 4-6 | 6-8 |
| Saturated(s)/Unsaturated(u) | | | | | u | u | u | u | u | u | u | s | s | s | u | s | s |
| **Metals (mg/kg)** | | | | | | | | | | | | | | | | | |
| Arsenic | 0.677 | 3 | 0.584 | 8.0 | **26.9** | **27,500** | NA | NA | NA | NA | NA | NA | NA | NA | NA | NA | NA |
| Barium | 15,300 | 100,000 | 164.8 | 364 | 31.1 | **3,320** | NA | NA | NA | NA | NA | NA | NA | NA | NA | NA | NA |
| Cadmium | 71 | 985 | 0.752 | 1.0 | 0.20J | **13.3** | NA | NA | NA | NA | NA | NA | NA | NA | NA | NA | NA |
| Chromium | --- | --- | 360,000 | 44 | 13,000B | 46,000B | NA | NA | NA | NA | NA | NA | NA | NA | NA | NA | NA |
| Trivalent Chromium | 100,000 | 100,000 | --- | --- | 13,000 | 46,000 | NA | NA | NA | NA | NA | NA | NA | NA | NA | NA | NA |
| Hexavalent Chromium | 0.301 | 6 | --- | --- | <0.49 | 1.6J | NA | NA | NA | NA | NA | NA | NA | NA | NA | NA | NA |
| Lead | 400 | 800 | 27 | 52 | **55.7** | **4,210** | NA | NA | NA | NA | NA | NA | NA | NA | **110** | NA | NA |
| Mercury | 3.13 | 3.13 | 0.208 | --- | **1.5** | **2.1** | NA | NA | NA | NA | NA | NA | NA | NA | NA | NA | NA |
| Selenium | 391 | 5,840 | 0.52 | --- | <0.68 | **12.2J** | NA | NA | NA | NA | NA | NA | NA | NA | NA | NA | NA |
| Silver | 391 | 5,840 | 0.8491 | --- | <0.25 | <3.6 | NA | NA | NA | NA | NA | NA | NA | NA | NA | NA | NA |
| **PAHs (mg/kg)** | | | | | | | | | | | | | | | | | |
| Acenaphthene | 3,590 | 45,200 | --- | --- | NA | NA | NA | NA | NA | NA | NA | NA | NA | NA | NA | NA | NA |
| Acenaphthylene | --- | --- | --- | --- | NA | NA | NA | NA | NA | NA | NA | NA | NA | NA | NA | NA | NA |
| Anthracene | 17,200 | 100,000 | 196.9492 | --- | NA | NA | NA | NA | NA | NA | NA | NA | NA | NA | NA | NA | NA |
| Benzo(a)anthracene | 1.14 | 20.8 | --- | --- | NA | NA | NA | NA | NA | NA | NA | NA | NA | NA | NA | NA | NA |
| Benzo(a)pyrene | 0.115 | 2.11 | 0.470 | --- | NA | NA | NA | NA | NA | NA | NA | NA | NA | NA | NA | NA | NA |
| Benzo(b)fluoranthene | 1.15 | 21.1 | 0.4793 | --- | NA | NA | NA | NA | NA | NA | NA | NA | NA | NA | NA | NA | NA |
| Benzo(g,h,i)perylene | --- | --- | --- | --- | NA | NA | NA | NA | NA | NA | NA | NA | NA | NA | NA | NA | NA |
| Benzo(k)fluoranthene | 11.5 | 211 | --- | --- | NA | NA | NA | NA | NA | NA | NA | NA | NA | NA | NA | NA | NA |
| Chrysene | 115 | 2,110 | 0.1446 | --- | NA | NA | NA | NA | NA | NA | NA | NA | NA | NA | NA | NA | NA |
| Dibenzo(a,h)anthracene | 0.115 | 2.11 | --- | --- | NA | NA | NA | NA | NA | NA | NA | NA | NA | NA | NA | NA | NA |
| Fluoranthene | 2,390 | 30,100 | 88.8778 | --- | NA | NA | NA | NA | NA | NA | NA | NA | NA | NA | NA | NA | NA |
| Fluorene | 2,390 | 30,100 | 14.8299 | --- | NA | NA | NA | NA | NA | NA | NA | NA | NA | NA | NA | NA | NA |
| Indeno(1,2,3-cd)pyrene | 1.15 | 21.1 | --- | --- | NA | NA | NA | NA | NA | NA | NA | NA | NA | NA | NA | NA | NA |
| 1-methyl naphthalene | 17.6 | 72.7 | --- | --- | NA | NA | NA | NA | NA | NA | NA | NA | NA | NA | NA | NA | NA |
| 2-methyl naphthalene | 239 | 3,010 | --- | --- | NA | NA | NA | NA | NA | NA | NA | NA | NA | NA | NA | NA | NA |
| Naphthalene | 5.52 | 24.1 | 0.6582 | --- | NA | NA | NA | NA | NA | NA | NA | NA | NA | NA | NA | NA | NA |
| Phenanthrene | --- | --- | --- | --- | NA | NA | NA | NA | NA | NA | NA | NA | NA | NA | NA | NA | NA |
| Pyrene | 1,790 | 22,600 | 54.5455 | --- | NA | NA | NA | NA | NA | NA | NA | NA | NA | NA | NA | NA | NA |
| Total Dectected PAHs | --- | --- | --- | --- | NA | NA | NA | NA | NA | NA | NA | NA | NA | NA | NA | NA | NA |

Bold values exceed protection of groundwater residual contaminant level
Boxed values exceed non-industrial direct contact residual contaminant level
Underlined values exceeded the background threshold value
Metals that exceed the background threshold values are compared to residual contaminant levels
--- - no standard established
B - Compound was found in the blank and sample
F1 - matrix spike and/or matrix spike duplicate recovery is outside acceptance limits
F2 - matrix spike/matrix spike duplicate relative percent difference exceeds control limits

J - Results between laboratory limit of detection and limit of quanitification
bgs - below ground surface
NA - not analyzed or not available
ND - not detected
mg/kg - milligrams per kilogram
PAHs - polynuclear aromatic hydrocarbons
TCLP - toxicity characteristic leaching procedure
VOCs - volatile organic compounds

**Table 1. Soil Analytical Results**

**Former Wayne Pigment Corp, 300 Barclay Street and 139 Oregon Street, Milwaukee, Wisconsin**

| PARAMETERS | Non-Industrial Direct Contact Residual Contaminant Level | Industrial Direct Contact RCL (mg/kg) | Protection of Groundwater Residual Contaminant Level | Background Threshold Value | Sample ID | | | | | | | | | | | |
|---|---|---|---|---|---|---|---|---|---|---|---|---|---|---|---|---|
| | | | | | V-3 | | V-4 | | V-5 | | | V-6 | | | V-7 | |
| Date Collected | | | | | 2/13/2017 | 2/13/2017 | 2/13/2017 | 2/13/2017 | 2/13/2017 | 2/13/2017 | 2/13/2017 | 2/14/2017 | 2/14/2017 | 2/14/2017 | 2/13/2017 | 2/13/2017 |
| Depth (feet bgs) | | | | | 4-6 | 6-8 | 4-6 | 6-8 | 3-5 | 4-6 | 6-8 | 3-5 | 4-6 | 6-8 | 4-6 | 6-8 |
| Saturated(s)/Unsaturated(u) | | | | | s | s | s | s | u | s | s | u | s | s | s | s |
| **VOCs (mg/kg)** | | | | | | | | | | | | | | | | |
| Benzene | 1.6 | 7.07 | 0.0051 | --- | **0.037** | <0.011 | **0.015 J** | <0.011 | NA | <0.011 | <0.011 | NA | **0.022** | <0.011 | **0.029** | <0.015 |
| Bromobenzene | 342 | 679 | --- | --- | <0.024* | <0.027* | <0.026* | <0.026* | NA | <0.026* | <0.026* | NA | <0.025 | <0.026 | <0.029* | <0.037* |
| Bromomethane | 9.6 | 43 | 0.0051 | --- | <0.054 | <0.059 | <0.057 | <0.058 | NA | <0.057 | <0.058 | NA | <0.056 | <0.057 | <0.064 | <0.082 |
| n-Butylbenzene | 108 | 108 | --- | --- | 0.085 | <0.025 | <0.028 | <0.024 | NA | <0.028 | 0.25 | NA | <0.027 | <0.024 | <0.031 | <0.040 |
| sec-Butylbenzene | 145 | 145 | --- | --- | 0.15 | 0.33 | <0.029 | <0.029 | NA | <0.029 | 0.30 | NA | <0.028 | 0.13 | <0.032 | <0.041 |
| tert-Butylbenzene | 183 | 183 | --- | --- | <0.027 | <0.030 | <0.029 | <0.029 | NA | <0.029 | <0.029 | NA | <0.028 | <0.029 | <0.032 | <0.041 |
| Chlorobenzene | 370 | 761 | --- | --- | <0.026 | <0.029 | <0.028 | <0.028 | NA | <0.028 | <0.028 | NA | <0.027 | <0.028 | <0.031 | <0.040 |
| Chloroethane | --- | --- | 0.2266 | --- | <0.034 | <0.038 | <0.036 | <0.037 | NA | <0.036 | <0.037 | NA | <0.035 | <0.036 | <0.041 | <0.052 |
| Chloroform | 0.454 | 1.98 | 0.0033 | --- | <0.025 | <0.028 | <0.027 | <0.027 | NA | <0.027 | <0.027 | NA | <0.026 | <0.027 | <0.030 | <0.038 |
| 1,1-Dichloroethane | 5.06 | 22.2 | 0.4828 | --- | <0.028 | <0.031 | <0.029 | <0.030 | NA | 0.078 | <0.030 | NA | 0.42 | <0.030 | 0.046 J | <0.042 |
| 1,2-Dichloroethane | 0.652 | 2.87 | 0.0028 | --- | <0.027 | <0.029 | <0.028 | <0.029 | NA | <0.028 | <0.029 | NA | <0.028 | <0.028 | <0.032 | <0.041 |
| 1,1-Dichloroethene | 320 | 1,190 | 0.005 | --- | <0.027 | <0.029 | <0.028 | <0.028 | NA | **0.070 J** | <0.028 | NA | **0.073** | <0.028 | <0.031 | <0.040 |
| cis-1,2-Dichloroethene | 156 | 2340 | 0.0412 | --- | **0.045 J** | <0.030 | <0.029 | <0.030 | NA | <0.029 | <0.030 | NA | 0.034 J | <0.029 | <0.033 | <0.042 |
| trans-1,2-Dichloroethene | 1,560 | 1850 | 0.0626 | --- | <0.024 | <0.026 | <0.025 | <0.026 | NA | <0.025 | <0.025 | NA | <0.025 | <0.025 | <0.028 | <0.036 |
| Di-isopropyl ether | 2,260 | 2260 | --- | --- | <0.019 | <0.021 | <0.020 | <0.020 | NA | <0.020 | <0.020 | NA | <0.019 | <0.020 | <0.022 | <0.029 |
| Ethylbenzene | 8.03 | 35.4 | 1.57 | --- | 0.11 | <0.014 | 0.045 | <0.013 | NA | 0.083 | 0.22 | NA | 0.024 | <0.013 | 0.021 | 0.25 |
| Hexachlorobutadiene | 1.63 | 7.49 | --- | --- | <0.030 | <0.033 | <0.032 | <0.033 | NA | <0.032 | <0.032 | NA | <0.031 | <0.032 | <0.036 | <0.046 |
| Isopropylbenzene | --- | --- | --- | --- | 0.14 | 0.25 | <0.028 | <0.028 | NA | <0.028 | 0.44 | NA | <0.027 | 0.11 | <0.031 | 0.12 |
| p-Isopropyltoluene | 162 | 162 | --- | --- | 0.17 | <0.027 | <0.026 | <0.026 | NA | <0.026 | 0.14 | NA | <0.025 | <0.026 | <0.029 | 0.16 |
| 2-Butanone (MEK) | 28,400 | 28,400 | 1.6661 | --- | NA | NA | NA | NA | NA | NA | NA | NA | NA | NA | NA | NA |
| Methylene chloride | 61.8 | 1150 | 0.0026 | --- | <0.11 | <0.12 | <0.12 | <0.12 | NA | <0.12 | <0.12 | NA | <0.11 | <0.12 | <0.13 | <0.17 |
| Naphthalene | 5.52 | 24.1 | 0.6582 | --- | 0.085 | <0.025 | 0.095 | <0.024 | NA | **2.0** | 0.13 | NA | 0.34 | <0.024 | 0.18 | 0.12 |
| n-Propylbenzene | --- | --- | --- | --- | 0.31 | 0.37 | <0.028 | <0.030 | NA | <0.030 | 0.3 | NA | <0.029 | 0.12 | <0.033 | <0.043 |
| Styrene | 867 | 867 | 0.22 | --- | <0.026 | <0.029 | <0.028 | <0.028 | NA | <0.028 | <0.028 | NA | <0.027 | <0.028 | <0.031 | <0.040 |
| Tetrachloroethene | 33 | 145 | 0.0045 | --- | <0.025 | <0.028 | **1.5** | **0.072 J** | NA | <0.027 | <0.027 | NA | **0.41** | <0.027 | <0.030 | <0.038 |
| Toluene | 818 | 818 | 1.1072 | --- | 0.094 | <0.011 | 0.094 | 0.018 | NA | 0.051 | 0.025 | NA | 0.052 | <0.011 | 0.10 | 0.20 |
| 1,2,3-Trichlorobenzene | 62.6 | 934 | --- | --- | <0.031 | <0.034 | <0.033 | <0.033 | NA | <0.033 | <0.033 | NA | <0.032 | <0.033 | <0.037 | <0.047 |
| 1,2,4-Trichlorobenzene | 24 | 113 | 0.408 | --- | <0.023 | <0.026 | <0.025 | <0.025 | NA | <0.025 | <0.025 | NA | <0.024 | <0.025 | <0.028 | <0.035 |
| 1,1,1-Trichloroethane | 640 | 640 | 0.1402 | --- | <0.026 | <0.028 | 0.25 | <0.028 | NA | 2.6 | <0.028 | NA | **3.0** | <0.027 | **0.18** | <0.039 |
| 1,1,2-Trichloroethane | 1.59 | 7.01 | 0.0032 | --- | <0.024* | <0.026* | <0.025* | <0.026* | NA | <0.025* | <0.026* | NA | <0.025 | <0.025 | <0.028* | <0.036* |
| Trichloroethene | 1.3 | 8.41 | 0.0036 | --- | **0.099** | <0.012 | **1.4** | **0.087** | NA | **1.4** | <0.012 | NA | **31** | **0.20** | **0.35** | <0.017 |
| Trichlorofluoromethane | 1,230 | 1230 | 4.4758 | --- | <0.029 | <0.032 | <0.031 | <0.031 | NA | <0.031 | <0.031 F2,F1 | NA | <0.030 | <0.031 | <0.034 | <0.044 |
| 1,2,3-Trimethylbenzene | 182 | 182 | --- | --- | NA | NA | NA | NA | NA | NA | NA | NA | NA | NA | NA | NA |
| 1,2,4-Trimethylbenzene | 219 | 219 | --- | --- | 1.2 | 1.5 | <0.026 | <0.026 | NA | 0.096 | 0.94 | NA | 0.11 | 0.16 | 0.079 J | 0.10 |
| 1,3,5-Trimethylbenzene | 182 | 182 | --- | --- | 0.21 | <0.028 | <0.027 | <0.028 | NA | <0.027 | 0.30 | NA | 0.052 J | <0.027 | <0.031 | <0.039 |
| Trimethylbenzenes | --- | --- | 1.3821 | --- | **1.41** | **1.5** | ND | ND | NA | 0.096 | 1.24 | NA | 0.16 | 0.16 | ND | 0.10 |
| Vinyl Chloride | 0.067 | 2.08 | 0.0001 | --- | <0.018 | <0.020 | <0.019 | <0.019 | NA | <0.019 | <0.019 | NA | <0.018 | <0.019 | <0.021 | <0.027 |
| m&p-Xylene | --- | --- | --- | --- | NA | NA | NA | NA | NA | NA | NA | NA | NA | NA | NA | NA |
| o-Xylene | --- | --- | --- | --- | NA | NA | NA | NA | NA | NA | NA | NA | NA | NA | NA | NA |
| Xylenes | 260 | 260 | 3.96 | --- | 2.6 | 0.093 | 0.27 | 0.040 | NA | 0.40 | 1.7 | NA | 0.18 | 0.093 | 0.21 | 1.1 |

**Table 1. Soil Analytical Results**

**Former Wayne Pigment Corp, 300 Barclay Street and 139 Oregon Street, Milwaukee, Wisconsin**

| PARAMETERS | Non-Industrial Direct Contact Residual Contaminant Level | Industrial Direct Contact RCL (mg/kg) | Protection of Groundwater Residual Contaminant Level | Background Threshold Value | Sample ID | | | | | | | | | | | |
|---|---|---|---|---|---|---|---|---|---|---|---|---|---|---|---|---|
| | | | | | V-3 | | V-4 | | V-5 | | | V-6 | | | V-7 | |
| Date Collected | | | | | 2/13/2017 | 2/13/2017 | 2/13/2017 | 2/13/2017 | 2/13/2017 | 2/13/2017 | 2/13/2017 | 2/14/2017 | 2/14/2017 | 2/14/2017 | 2/13/2017 | 2/13/2017 |
| Depth (feet bgs) | | | | | 4-6 | 6-8 | 4-6 | 6-8 | 3-5 | 4-6 | 6-8 | 3-5 | 4-6 | 6-8 | 4-6 | 6-8 |
| Saturated(s)/Unsaturated(u) | | | | | s | s | s | s | u | s | s | u | s | s | s | s |
| **Metals (mg/kg)** | | | | | | | | | | | | | | | | |
| Arsenic | 0.677 | 3 | 0.584 | 8.0 | NA | NA | NA | NA | NA | NA | NA | NA | NA | NA | NA | NA |
| Barium | 15,300 | 100,000 | 164.8 | 364 | NA | NA | NA | NA | NA | NA | NA | NA | NA | NA | NA | NA |
| Cadmium | 71 | 985 | 0.752 | 1.0 | NA | NA | NA | NA | NA | NA | NA | NA | NA | NA | NA | NA |
| Chromium | --- | --- | 360,000 | 44 | NA | NA | NA | NA | NA | NA | NA | NA | NA | NA | NA | NA |
| Trivalent Chromium | 100,000 | 100,000 | --- | --- | NA | NA | NA | NA | NA | NA | NA | NA | NA | NA | NA | NA |
| Hexavalent Chromium | 0.301 | 6 | --- | --- | NA | NA | NA | NA | NA | NA | NA | NA | NA | NA | NA | NA |
| Lead | 400 | 800 | 27 | 52 | NA | NA | NA | NA | **160** | NA | NA | **380** | NA | NA | NA | NA |
| Mercury | 3.13 | 3.13 | 0.208 | --- | NA | NA | NA | NA | NA | NA | NA | NA | NA | NA | NA | NA |
| Selenium | 391 | 5,840 | 0.52 | --- | NA | NA | NA | NA | NA | NA | NA | NA | NA | NA | NA | NA |
| Silver | 391 | 5,840 | 0.8491 | --- | NA | NA | NA | NA | NA | NA | NA | NA | NA | NA | NA | NA |
| **PAHs (mg/kg)** | | | | | | | | | | | | | | | | |
| Acenaphthene | 3,590 | 45,200 | --- | --- | NA | NA | NA | NA | NA | NA | NA | NA | NA | NA | NA | NA |
| Acenaphthylene | --- | --- | --- | --- | NA | NA | NA | NA | NA | NA | NA | NA | NA | NA | NA | NA |
| Anthracene | 17,200 | 100,000 | 196.9492 | --- | NA | NA | NA | NA | NA | NA | NA | NA | NA | NA | NA | NA |
| Benzo(a)anthracene | 1.14 | 20.8 | --- | --- | NA | NA | NA | NA | NA | NA | NA | NA | NA | NA | NA | NA |
| Benzo(a)pyrene | 0.115 | 2.11 | 0.470 | --- | NA | NA | NA | NA | NA | NA | NA | NA | NA | NA | NA | NA |
| Benzo(b)fluoranthene | 1.15 | 21.1 | 0.4793 | --- | NA | NA | NA | NA | NA | NA | NA | NA | NA | NA | NA | NA |
| Benzo(g,h,i)perylene | --- | --- | --- | --- | NA | NA | NA | NA | NA | NA | NA | NA | NA | NA | NA | NA |
| Benzo(k)fluoranthene | 11.5 | 211 | --- | --- | NA | NA | NA | NA | NA | NA | NA | NA | NA | NA | NA | NA |
| Chrysene | 115 | 2,110 | 0.1446 | --- | NA | NA | NA | NA | NA | NA | NA | NA | NA | NA | NA | NA |
| Dibenzo(a,h)anthracene | 0.115 | 2.11 | --- | --- | NA | NA | NA | NA | NA | NA | NA | NA | NA | NA | NA | NA |
| Fluoranthene | 2,390 | 30,100 | 88.8778 | --- | NA | NA | NA | NA | NA | NA | NA | NA | NA | NA | NA | NA |
| Fluorene | 2,390 | 30,100 | 14.8299 | --- | NA | NA | NA | NA | NA | NA | NA | NA | NA | NA | NA | NA |
| Indeno(1,2,3-cd)pyrene | 1.15 | 21.1 | --- | --- | NA | NA | NA | NA | NA | NA | NA | NA | NA | NA | NA | NA |
| 1-methyl naphthalene | 17.6 | 72.7 | --- | --- | NA | NA | NA | NA | NA | NA | NA | NA | NA | NA | NA | NA |
| 2-methyl naphthalene | 239 | 3,010 | --- | --- | NA | NA | NA | NA | NA | NA | NA | NA | NA | NA | NA | NA |
| Naphthalene | 5.52 | 24.1 | 0.6582 | --- | NA | NA | NA | NA | NA | NA | NA | NA | NA | NA | NA | NA |
| Phenanthrene | --- | --- | --- | --- | NA | NA | NA | NA | NA | NA | NA | NA | NA | NA | NA | NA |
| Pyrene | 1,790 | 22,600 | 54.5455 | --- | NA | NA | NA | NA | NA | NA | NA | NA | NA | NA | NA | NA |
| Total Dectected PAHs | --- | --- | --- | --- | NA | NA | NA | NA | NA | NA | NA | NA | NA | NA | NA | NA |

Bold values exceed protection of groundwater residual contaminant level
Boxed values exceed non-industrial direct contact residual contaminant level
Underlined values exceeded the background threshold value
Metals that exceed the background threshold values are compared to residual contaminant levels
--- - no standard established
B - Compound was found in the blank and sample
F1 - matrix spike and/or matrix spike duplicate recovery is outside acceptance limits
F2 - matrix spike/matrix spike duplicate relative percent difference exceeds control limits

**Table 1. Soil Analytical Results**

**Former Wayne Pigment Corp, 300 Barclay Street and 139 Oregon Street, Milwaukee, Wisconsin**

| PARAMETERS | Non-Industrial Direct Contact Residual Contaminant Level | Industrial Direct Contact RCL (mg/kg) | Protection of Groundwater Residual Contaminant Level | Background Threshold Value | Sample ID | | | | | | | | | | | |
|---|---|---|---|---|---|---|---|---|---|---|---|---|---|---|---|---|
| | | | | | V-8 | | | V-9 | | V-10 | | V-11 | | | V-12 | |
| Date Collected | | | | | 2/13/2017 | 2/13/2017 | 2/13/2017 | 2/14/2017 | 2/14/2017 | 2/13/2017 | 2/13/2017 | 2/13/2017 | 2/13/2017 | 2/13/2017 | 2/14/2017 | 2/14/2017 |
| Depth (feet bgs) | | | | | 3-5 | 4-6 | 6-8 | 4-6 | 6-8 | 4-6 | 6-8 | 3-5 | 4-6 | 6-8 | 4-6 | 6-8 |
| Saturated(s)/Unsaturated(u) | | | | | u | s | s | s | s | s | s | u | s | s | s | s |
| **VOCs (mg/kg)** | | | | | | | | | | | | | | | | |
| Benzene | 1.6 | 7.07 | 0.0051 | --- | NA | **0.11** | **0.10** | <0.023 | **0.19** | <0.011 | <0.015 | NA | **0.056** | **0.095** | <0.12 | **0.070** |
| Bromobenzene | 342 | 679 | --- | --- | NA | <0.025* | <0.026* | <0.057 | <0.029 | <0.026* | <0.037* | NA | <0.026* | <0.031* | <0.30 | <0.064 |
| Bromomethane | 9.6 | 43 | 0.0051 | --- | NA | <0.055 | <0.058 | <0.13 | <0.065 | <0.058 | <0.082 | NA | <0.058 | <0.068 | <0.67 | <0.14 |
| n-Butylbenzene | 108 | 108 | --- | --- | NA | <0.027 | <0.028 | <0.054 | <0.027 | <0.024 | <0.034 | NA | <0.028 | <0.029 | <0.33 | <0.060 |
| sec-Butylbenzene | 145 | 145 | --- | --- | NA | <0.027 | 0.042 J | <0.064 | 0.17 | <0.029 | <0.041 | NA | <0.029 | <0.034 | <0.33 | <0.071 |
| tert-Butylbenzene | 183 | 183 | --- | --- | NA | <0.027 | <0.029 | <0.064 | <0.032 | <0.029 | <0.041 | NA | <0.029 | <0.034 | <0.33 | <0.071 |
| Chlorobenzene | 370 | 761 | --- | --- | NA | <0.027 | <0.028 | <0.062 | <0.031 | <0.028 | <0.040 | NA | <0.028 | <0.033 | <0.32 | <0.069 |
| Chloroethane | --- | --- | 0.2266 | --- | NA | <0.035 | <0.037 | <0.081 | <0.041 | <0.037 | <0.052 | NA | <0.037 | <0.043 | <0.42 | <0.090 |
| Chloroform | 0.454 | 1.98 | 0.0033 | --- | NA | <0.025 | <0.027 | <0.059 | <0.030 | <0.027 | <0.038 | NA | <0.027 | <0.032 | <0.31 | <0.066 |
| 1,1-Dichloroethane | 5.06 | 22.2 | 0.4828 | --- | NA | **1.0** | **0.85** | **1.3** | **1.4** | <0.030 | **1.3** | NA | **19** | **1.5** | **1.0** | **1.7** |
| 1,2-Dichloroethane | 0.652 | 2.87 | 0.0028 | --- | NA | <0.027 | <0.029 | <0.063 | <0.032 | <0.029 | <0.040 | NA | <0.029 | <0.034 | 1.1 | <0.070 |
| 1,1-Dichloroethene | 320 | 1,190 | 0.005 | --- | NA | <0.027 | <0.028 | **0.27** | <0.032 | <0.028 | <0.040 | NA | **0.63** | <0.033 | **3.6** | **0.19** |
| cis-1,2-Dichloroethene | 156 | 2340 | 0.0412 | --- | NA | **0.16** | <0.030 | **9.2** | **2.8** | <0.030 | **0.13** | NA | <0.030 | **1.8** | **16** | **31** |
| trans-1,2-Dichloroethene | 1,560 | 1850 | 0.0626 | --- | NA | <0.024 | **0.16** | **0.43** | **0.72** | <0.025 | **0.17** | NA | <0.026 | **1.1** | **0.97** | **7.0** |
| Di-isopropyl ether | 2,260 | 2260 | --- | --- | NA | 0.065 J | <0.020 | <0.044 | <0.022 | <0.020 | <0.029 | NA | <0.020 | <0.024 | <0.23 | <0.049 |
| Ethylbenzene | 8.03 | 35.4 | 1.57 | --- | NA | 1.2 | 0.25 | 0.067 | **2.3** | <0.013 | <0.019 | NA | 0.050 | 0.92 | 0.22 | 0.70 |
| Hexachlorobutadiene | 1.63 | 7.49 | --- | --- | NA | <0.031 | <0.033 | <0.072 | <0.036 | <0.032 | <0.046 | NA | <0.033 | <0.038 | <0.37 | <0.080 |
| Isopropylbenzene | --- | --- | --- | --- | NA | 0.11 | 0.15 | <0.062 | 0.38 | <0.028 | <0.040 | NA | <0.028 | 0.18 | <0.32 | 0.16 J |
| p-Isopropyltoluene | 162 | 162 | --- | --- | NA | <0.025 | 0.16 | <0.058 | 0.15 | <0.026 | <0.037 | NA | 0.082 | <0.031 | <0.30 | 0.16 J |
| 2-Butanone (MEK) | 28,400 | 28,400 | 1.6661 | --- | NA | NA | NA | NA | NA | NA | NA | NA | NA | NA | NA | NA |
| Methylene chloride | 61.8 | 1150 | 0.0026 | --- | NA | <0.11 | <0.12 | <0.26 | <0.13 | <0.12 | <0.17 | NA | <0.12 | <0.14 | <1.4 | <0.29 |
| Naphthalene | 5.52 | 24.1 | 0.6582 | --- | NA | 0.29 | <0.024 | <0.054 | <0.027 | <0.024 | <0.034 | NA | **0.88** | <0.029 | **0.83 J** | <0.060 |
| n-Propylbenzene | --- | --- | --- | --- | NA | <0.028 | 0.065 J | <0.066 | 0.16 | <0.030 | <0.043 | NA | <0.030 | <0.036 | <0.35 | <0.074 |
| Styrene | 867 | 867 | 0.22 | --- | NA | <0.027 | <0.028 | <0.062 | <0.031 | <0.028 | <0.040 | NA | <0.028 | <0.033 | <0.32 | <0.069 |
| Tetrachloroethene | 33 | 145 | 0.0045 | --- | NA | **0.37** | <0.027 | **0.25** | <0.030 | <0.027 | <0.038 | NA | <0.027 | <0.032 | **0.38 J** | <0.066 |
| Toluene | 818 | 818 | 1.1072 | --- | NA | 0.84 | 0.053 | <0.024 | 0.38 | 0.067 | **5.6** | NA | 0.081 | 0.35 | 0.44 | 0.98 |
| 1,2,3-Trichlorobenzene | 62.6 | 934 | --- | --- | NA | <0.032 | <0.033 | <0.074 | <0.037 | <0.033 | <0.047 | NA | <0.034 | <0.039 | <0.38 | <0.082 |
| 1,2,4-Trichlorobenzene | 24 | 113 | 0.408 | --- | NA | <0.024 | <0.025 | <0.055 | <0.028 | <0.025 | <0.035 | NA | <0.025 | <0.029 | <0.29 | <0.061 |
| 1,1,1-Trichloroethane | 640 | 640 | 0.1402 | --- | NA | **1.7** | <0.028 | **8.9** | **0.58** | **0.22** | **1.1** | NA | **26** | **0.39** | **89** | **0.46** |
| 1,1,2-Trichloroethane | 1.59 | 7.01 | 0.0032 | --- | NA | <0.024* | <0.026* | <0.057 | <0.029 | <0.026* | <0.036* | NA | <0.026* | <0.030* | **0.70 J** | <0.063 |
| Trichloroethene | 1.3 | 8.41 | 0.0036 | --- | NA | **1.4** | <0.012 | **99** | **6.0** | **1.5** | **1.8** | NA | **61** | **2.5** | **1,300** | **81** |
| Trichlorofluoromethane | 1,230 | 1230 | 4.4758 | --- | NA | <0.029 | <0.031 | <0.069 | <0.035 | <0.031 | <0.044 | NA | <0.031 | <0.037 | <0.36 | <0.076 |
| 1,2,3-Trimethylbenzene | 182 | 182 | --- | --- | NA | NA | NA | NA | NA | NA | NA | NA | NA | NA | NA | NA |
| 1,2,4-Trimethylbenzene | 219 | 219 | --- | --- | NA | <0.025 | 0.29 | 0.094 J | 0.57 | <0.026 | <0.037 | NA | 0.064 J | 0.071 J | <0.30 | <0.064 |
| 1,3,5-Trimethylbenzene | 182 | 182 | --- | --- | NA | <0.026 | 0.11 | <0.061 | 0.28 | <0.028 | <0.039 | NA | <0.028 | <0.033 | <0.32 | <0.068 |
| Trimethylbenzenes | --- | --- | 1.3821 | --- | NA | ND | 0.40 | 0.094 | 0.85 | ND | ND | NA | ND | 0.071 | ND | ND |
| Vinyl Chloride | 0.067 | 2.08 | 0.0001 | --- | NA | **0.056** | **1.0** | **0.18** | **4.2** | **0.023 J** | **0.046 J** | NA | **0.061** | **4.2** | **1.9** | **9.0** |
| m&p-Xylene | --- | --- | --- | --- | NA | NA | NA | NA | NA | NA | NA | NA | NA | NA | NA | NA |
| o-Xylene | --- | --- | --- | --- | NA | NA | NA | NA | NA | NA | NA | NA | NA | NA | NA | NA |
| Xylenes | 260 | 260 | 3.96 | --- | NA | 2.7 | 1.7 | 0.25 | 6.6 | 0.038 | <0.023 | NA | 0.33 | 3.3 | 0.82 | 2.8 |

**Table 1. Soil Analytical Results**

**Former Wayne Pigment Corp, 300 Barclay Street and 139 Oregon Street, Milwaukee, Wisconsin**

| PARAMETERS | Non-Industrial Direct Contact Residual Contaminant Level | Industrial Direct Contact RCL (mg/kg) | Protection of Groundwater Residual Contaminant Level | Background Threshold Value | Sample ID | | | | | | | | | | | |
|---|---|---|---|---|---|---|---|---|---|---|---|---|---|---|---|---|
| | | | | | V-8 | | | V-9 | | V-10 | | V-11 | | | V-12 | |
| Date Collected | | | | | 2/13/2017 | 2/13/2017 | 2/13/2017 | 2/14/2017 | 2/14/2017 | 2/13/2017 | 2/13/2017 | 2/13/2017 | 2/13/2017 | 2/13/2017 | 2/14/2017 | 2/14/2017 |
| Depth (feet bgs) | | | | | 3-5 | 4-6 | 6-8 | 4-6 | 6-8 | 4-6 | 6-8 | 3-5 | 4-6 | 6-8 | 4-6 | 6-8 |
| Saturated(s)/Unsaturated(u) | | | | | u | s | s | s | s | s | s | u | s | s | s | s |
| **Metals (mg/kg)** | | | | | | | | | | | | | | | | |
| Arsenic | 0.677 | 3 | 0.584 | 8.0 | NA | NA | NA | NA | NA | NA | NA | NA | NA | NA | NA | NA |
| Barium | 15,300 | 100,000 | 164.8 | 364 | NA | NA | NA | NA | NA | NA | NA | NA | NA | NA | NA | NA |
| Cadmium | 71 | 985 | 0.752 | 1.0 | NA | NA | NA | NA | NA | NA | NA | NA | NA | NA | NA | NA |
| Chromium | --- | --- | 360,000 | 44 | NA | NA | NA | NA | NA | NA | NA | NA | NA | NA | NA | NA |
| Trivalent Chromium | 100,000 | 100,000 | --- | --- | NA | NA | NA | NA | NA | NA | NA | NA | NA | NA | NA | NA |
| Hexavalent Chromium | 0.301 | 6 | --- | --- | NA | NA | NA | NA | NA | NA | NA | NA | NA | NA | NA | NA |
| Lead | 400 | 800 | 27 | 52 | **210** | NA | NA | NA | NA | NA | NA | **430** | NA | **110** | NA | NA |
| Mercury | 3.13 | 3.13 | 0.208 | --- | NA | NA | NA | NA | NA | NA | NA | NA | NA | NA | NA | NA |
| Selenium | 391 | 5,840 | 0.52 | --- | NA | NA | NA | NA | NA | NA | NA | NA | NA | NA | NA | NA |
| Silver | 391 | 5,840 | 0.8491 | --- | NA | NA | NA | NA | NA | NA | NA | NA | NA | NA | NA | NA |
| **PAHs (mg/kg)** | | | | | | | | | | | | | | | | |
| Acenaphthene | 3,590 | 45,200 | --- | --- | NA | NA | NA | NA | NA | NA | NA | NA | NA | NA | NA | NA |
| Acenaphthylene | --- | --- | --- | --- | NA | NA | NA | NA | NA | NA | NA | NA | NA | NA | NA | NA |
| Anthracene | 17,200 | 100,000 | 196.9492 | --- | NA | NA | NA | NA | NA | NA | NA | NA | NA | NA | NA | NA |
| Benzo(a)anthracene | 1.14 | 20.8 | --- | --- | NA | NA | NA | NA | NA | NA | NA | NA | NA | NA | NA | NA |
| Benzo(a)pyrene | 0.115 | 2.11 | 0.470 | --- | NA | NA | NA | NA | NA | NA | NA | NA | NA | NA | NA | NA |
| Benzo(b)fluoranthene | 1.15 | 21.1 | 0.4793 | --- | NA | NA | NA | NA | NA | NA | NA | NA | NA | NA | NA | NA |
| Benzo(g,h,i)perylene | --- | --- | --- | --- | NA | NA | NA | NA | NA | NA | NA | NA | NA | NA | NA | NA |
| Benzo(k)fluoranthene | 11.5 | 211 | --- | --- | NA | NA | NA | NA | NA | NA | NA | NA | NA | NA | NA | NA |
| Chrysene | 115 | 2,110 | 0.1446 | --- | NA | NA | NA | NA | NA | NA | NA | NA | NA | NA | NA | NA |
| Dibenzo(a,h)anthracene | 0.115 | 2.11 | --- | --- | NA | NA | NA | NA | NA | NA | NA | NA | NA | NA | NA | NA |
| Fluoranthene | 2,390 | 30,100 | 88.8778 | --- | NA | NA | NA | NA | NA | NA | NA | NA | NA | NA | NA | NA |
| Fluorene | 2,390 | 30,100 | 14.8299 | --- | NA | NA | NA | NA | NA | NA | NA | NA | NA | NA | NA | NA |
| Indeno(1,2,3-cd)pyrene | 1.15 | 21.1 | --- | --- | NA | NA | NA | NA | NA | NA | NA | NA | NA | NA | NA | NA |
| 1-methyl naphthalene | 17.6 | 72.7 | --- | --- | NA | NA | NA | NA | NA | NA | NA | NA | NA | NA | NA | NA |
| 2-methyl naphthalene | 239 | 3,010 | --- | --- | NA | NA | NA | NA | NA | NA | NA | NA | NA | NA | NA | NA |
| Naphthalene | 5.52 | 24.1 | 0.6582 | --- | NA | NA | NA | NA | NA | NA | NA | NA | NA | NA | NA | NA |
| Phenanthrene | --- | --- | --- | --- | NA | NA | NA | NA | NA | NA | NA | NA | NA | NA | NA | NA |
| Pyrene | 1,790 | 22,600 | 54.5455 | --- | NA | NA | NA | NA | NA | NA | NA | NA | NA | NA | NA | NA |
| Total Dectected PAHs | --- | --- | --- | --- | NA | NA | NA | NA | NA | NA | NA | NA | NA | NA | NA | NA |

Bold values exceed protection of groundwater residual contaminant level
Boxed values exceed non-industrial direct contact residual contaminant level
Underlined values exceeded the background threshold value
Metals that exceed the background threshold values are compared to residual contaminant levels
--- - no standard established
B - Compound was found in the blank and sample
F1 - matrix spike and/or matrix spike duplicate recovery is outside acceptance limits
F2 - matrix spike/matrix spike duplicate relative percent difference exceeds control limits

**Table 1. Soil Analytical Results**

**Former Wayne Pigment Corp, 300 Barclay Street and 139 Oregon Street, Milwaukee, Wisconsin**

| PARAMETERS | Non-Industrial Direct Contact Residual Contaminant Level | Industrial Direct Contact RCL (mg/kg) | Protection of Groundwater Residual Contaminant Level | Background Threshold Value | Sample ID | | | | | | | | | | | | |
|---|---|---|---|---|---|---|---|---|---|---|---|---|---|---|---|---|---|
| | | | | | V-13 | | | V-14 | | V-15 | | V-16 | | V-17 | | V-18 | |
| Date Collected | | | | | 2/14/2017 | 2/14/2017 | 2/14/2017 | 2/14/2017 | 2/14/2017 | 2/14/2017 | 2/14/2017 | 2/14/2017 | 2/14/2017 | 2/14/2017 | 2/14/2017 | 2/14/2017 | 2/14/2017 |
| Depth (feet bgs) | | | | | 3-5 | 4-6 | 6-8 | 4-6 | 6-8 | 4-6 | 6-8 | 4-6 | 6-8 | 4-6 | 6-8 | 4-6 | 6-8 |
| Saturated(s)/Unsaturated(u) | | | | | s | s | s | s | s | s | s | s | s | s | s | s | s |
| **VOCs (mg/kg)** | | | | | | | | | | | | | | | | | |
| Benzene | 1.6 | 7.07 | 0.0051 | --- | NA | <0.011 | <0.013 | <0.013 | <0.011 | **0.033** | **0.019** | **0.053** | **0.019** | <0.010 | **0.027** | **0.023** | <0.012 |
| Bromobenzene | 342 | 679 | --- | --- | NA | <0.026 | <0.031 | <0.033 | <0.027 | <0.025 | <0.027 | <0.031 | <0.027 | <0.025 | <0.025 | <0.029 | <0.030 |
| Bromomethane | 9.6 | 43 | 0.0051 | --- | NA | <0.058 | <0.069 | <0.073 | <0.060 | <0.056 | <0.060 | <0.069 | <0.061 | <0.056 | <0.057 | <0.064 | <0.067 |
| n-Butylbenzene | 108 | 108 | --- | --- | NA | <0.028 | <0.029 | <0.036 | <0.029 | <0.027 | <0.025 | <0.029 | <0.030 | <0.027 | <0.028 | <0.031 | <0.033 |
| sec-Butylbenzene | 145 | 145 | --- | --- | NA | <0.029 | <0.035 | <0.036 | <0.030 | <0.028 | <0.030 | <0.035 | <0.030 | <0.028 | <0.028 | <0.032 | <0.034 |
| tert-Butylbenzene | 183 | 183 | --- | --- | NA | <0.029 | <0.035 | <0.036 | <0.030 | <0.028 | <0.030 | <0.035 | <0.030 | <0.028 | <0.028 | <0.032 | <0.034 |
| Chlorobenzene | 370 | 761 | --- | --- | NA | <0.028 | <0.034 | <0.035 | <0.029 | <0.027 | <0.029 | <0.034 | <0.030 | <0.027 | <0.027 | <0.031 | <0.033 |
| Chloroethane | --- | --- | 0.2266 | --- | NA | <0.037 | <0.044 | <0.046 | <0.038 | **0.25** | **0.31** | <0.044 | <0.039 | <0.036 | <0.036 | <0.041 | <0.043 |
| Chloroform | 0.454 | 1.98 | 0.0033 | --- | NA | <0.027 | <0.032 | <0.034 | <0.028 | <0.026 | <0.028 | <0.032 | <0.028 | <0.026 | <0.026 | <0.030 | <0.031 |
| 1,1-Dichloroethane | 5.06 | 22.2 | 0.4828 | --- | NA | <0.030 | <0.036 | 0.072 J | 0.11 | **8.6** | **0.61** | **1.9** | 0.33 | <0.029 | <0.029 | **6.4** | 0.10 |
| 1,2-Dichloroethane | 0.652 | 2.87 | 0.0028 | --- | NA | <0.029 | <0.034 | <0.036 | <0.030 | <0.027 | <0.030 | <0.034* | <0.030* | <0.028* | <0.028* | <0.032* | <0.033* |
| 1,1-Dichloroethene | 320 | 1,190 | 0.005 | --- | NA | <0.028 | <0.034 | <0.036 | <0.030 | **0.36** | <0.030 | **0.11** | <0.030 | <0.028 | <0.028 | **0.69** | <0.033 |
| cis-1,2-Dichloroethene | 156 | 2340 | 0.0412 | --- | NA | **0.048 J** | <0.036 | **0.070 J** | <0.031 | <0.029 | 0.040 J | **3.5** | 0.40 | **0.097** | <0.029 | **2.9** | **0.24** |
| trans-1,2-Dichloroethene | 1,560 | 1850 | 0.0626 | --- | NA | <0.025 | <0.031 | <0.032 | <0.027 | <0.025 | **0.17** | **0.50** | **0.55** | <0.025 | <0.025 | **3.1** | **2.0** |
| Di-isopropyl ether | 2,260 | 2260 | --- | --- | NA | <0.020 | <0.024 | <0.025 | <0.021 | <0.019 | <0.021 | <0.024 | <0.021 | <0.020 | <0.020 | <0.022 | <0.023 |
| Ethylbenzene | 8.03 | 35.4 | 1.57 | --- | NA | <0.013 | <0.016 | 0.027 | <0.014 | 0.022 | 0.016 J | <0.016 | 0.057 | <0.013 | <0.013 | <0.015 | <0.015 |
| Hexachlorobutadiene | 1.63 | 7.49 | --- | --- | NA | <0.032 | <0.039 | <0.041 | <0.034 | <0.031 | <0.034 | <0.039 | <0.034 | <0.032 | <0.032 | <0.036 | <0.038 |
| Isopropylbenzene | --- | --- | --- | --- | NA | <0.028 | <0.033 | <0.035 | <0.029 | <0.027 | <0.029 | <0.033 | <0.029 | <0.027 | <0.027 | <0.031 | <0.032 |
| p-Isopropyltoluene | 162 | 162 | --- | --- | NA | <0.026 | <0.032 | <0.033 | <0.027 | <0.025 | <0.027 | <0.031 | <0.028 | <0.026 | <0.026 | <0.029 | <0.031 |
| 2-Butanone (MEK) | 28,400 | 28,400 | 1.6661 | --- | NA | NA | NA | NA | NA | NA | NA | NA | NA | NA | NA | NA | NA |
| Methylene chloride | 61.8 | 1150 | 0.0026 | --- | NA | <0.12 | <0.14 | <0.15 | <0.12 | <0.11 | <0.12 | <0.14 | <0.12 | <0.12 | <0.12 | <0.13 | <0.14 |
| Naphthalene | 5.52 | 24.1 | 0.6582 | --- | NA | 0.072 J | <0.029 | **2.1** | 0.27 | 0.26 | <0.025 | <0.029 | 0.44 | **0.72** | 0.079 | <0.027 | **0.95** |
| n-Propylbenzene | --- | --- | --- | --- | NA | <0.030 | <0.036 | <0.038 | <0.031 | <0.029 | <0.031 | <0.036 | <0.032 | <0.029 | <0.029 | <0.033 | <0.035 |
| Styrene | 867 | 867 | 0.22 | --- | NA | <0.028 | <0.034 | <0.035 | <0.029 | <0.027 | <0.029 | <0.034 | <0.030 | <0.027 | 0.08 | <0.031 | <0.033 |
| Tetrachloroethene | 33 | 145 | 0.0045 | --- | NA | <0.027 | <0.032 | **0.071 J** | <0.028 | <0.026 | <0.028 | <0.032 | <0.028 | <0.026 | <0.026 | <0.030 | <0.031 |
| Toluene | 818 | 818 | 1.1072 | --- | NA | <0.011 | <0.013 | 0.032 | 0.019 | 0.063 | 0.037 | 0.036 | 0.039 | <0.010 | <0.010 | 0.025 | <0.012 |
| 1,2,3-Trichlorobenzene | 62.6 | 934 | --- | --- | NA | <0.033 | <0.040 | <0.042 | <0.035 | <0.032 | <0.035 | <0.040 | <0.035 | <0.032 | <0.033 | <0.037 | <0.039 |
| 1,2,4-Trichlorobenzene | 24 | 113 | 0.408 | --- | NA | <0.025 | <0.030 | <0.031 | <0.026 | <0.024 | <0.026 | <0.030* | <0.026* | <0.024* | <0.024* | <0.028* | <0.029* |
| 1,1,1-Trichloroethane | 640 | 640 | 0.1402 | --- | NA | 0.15 | <0.033 | **0.58** | **0.21** | **16** | **0.21** | **0.43** | **0.21** | 0.049 J | <0.027 | **22** | <0.032 |
| 1,1,2-Trichloroethane | 1.59 | 7.01 | 0.0032 | --- | NA | <0.026 | <0.031 | <0.032 | <0.027 | <0.025 | <0.027 | <0.031 | <0.027 | <0.025 | <0.025 | <0.028 | <0.030 |
| Trichloroethene | 1.3 | 8.41 | 0.0036 | --- | NA | **1.5** | <0.014 | **4.6** | **0.26** | **31** | **0.39** | **11** | **2.4** | **2.7** | **0.073** | **20** | **1.3** |
| Trichlorofluoromethane | 1,230 | 1230 | 4.4758 | --- | NA | <0.031 | <0.037 | <0.039 | <0.032 | <0.030 | <0.032 | <0.037 | <0.033 | <0.030 | <0.030 | <0.035 | <0.036 |
| 1,2,3-Trimethylbenzene | 182 | 182 | --- | --- | NA | NA | NA | NA | NA | NA | NA | NA | NA | NA | NA | NA | NA |
| 1,2,4-Trimethylbenzene | 219 | 219 | --- | --- | NA | <0.026 | <0.031 | <0.033 | <0.027 | <0.025 | <0.027 | <0.031 | <0.027 | <0.025 | <0.025 | <0.029 | <0.030 |
| 1,3,5-Trimethylbenzene | 182 | 182 | --- | --- | NA | <0.028 | <0.033 | <0.035 | <0.029 | <0.027 | <0.029 | <0.033 | <0.029 | <0.027 | <0.027 | <0.031 | <0.032 |
| Trimethylbenzenes | --- | --- | 1.3821 | --- | NA | ND | ND | ND | ND | ND | ND | ND | ND | ND | ND | ND | ND |
| Vinyl Chloride | 0.067 | 2.08 | 0.0001 | --- | NA | **0.030 J** | **0.029 J** | <0.024 | **0.034 J** | <0.018 | **0.029 J** | **0.65** | **0.20** | <0.019 | <0.019 | **0.63** | **0.12** |
| m&p-Xylene | --- | --- | --- | --- | NA | NA | NA | NA | NA | NA | NA | NA | NA | NA | NA | NA | NA |
| o-Xylene | --- | --- | --- | --- | NA | NA | NA | NA | NA | NA | NA | NA | NA | NA | NA | NA | NA |
| Xylenes | 260 | 260 | 3.96 | --- | NA | 0.018 J | <0.019 | 0.091 | 0.038 | 0.14 | 0.065 | <0.019 | 0.16 | <0.016 | <0.016 | 0.049 | <0.019 |

**Table 1. Soil Analytical Results**

**Former Wayne Pigment Corp, 300 Barclay Street and 139 Oregon Street, Milwaukee, Wisconsin**

| PARAMETERS | Non-Industrial Direct Contact Residual Contaminant Level | Industrial Direct Contact RCL (mg/kg) | Protection of Groundwater Residual Contaminant Level | Background Threshold Value | Sample ID | | | | | | | | | | | | |
|---|---|---|---|---|---|---|---|---|---|---|---|---|---|---|---|---|---|
| | | | | | V-13 | | | V-14 | | V-15 | | V-16 | | V-17 | | V-18 | |
| Date Collected | | | | | 2/14/2017 | 2/14/2017 | 2/14/2017 | 2/14/2017 | 2/14/2017 | 2/14/2017 | 2/14/2017 | 2/14/2017 | 2/14/2017 | 2/14/2017 | 2/14/2017 | 2/14/2017 | 2/14/2017 |
| Depth (feet bgs) | | | | | 3-5 | 4-6 | 6-8 | 4-6 | 6-8 | 4-6 | 6-8 | 4-6 | 6-8 | 4-6 | 6-8 | 4-6 | 6-8 |
| Saturated(s)/Unsaturated(u) | | | | | s | s | s | s | s | s | s | s | s | s | s | s | s |
| **Metals (mg/kg)** | | | | | | | | | | | | | | | | | |
| Arsenic | 0.677 | 3 | 0.584 | 8.0 | NA | NA | NA | NA | NA | NA | NA | NA | NA | NA | NA | NA | NA |
| Barium | 15,300 | 100,000 | 164.8 | 364 | NA | NA | NA | NA | NA | NA | NA | NA | NA | NA | NA | NA | NA |
| Cadmium | 71 | 985 | 0.752 | 1.0 | NA | NA | NA | NA | NA | NA | NA | NA | NA | NA | NA | NA | NA |
| Chromium | --- | --- | 360,000 | 44 | NA | NA | NA | NA | NA | NA | NA | NA | NA | NA | NA | NA | NA |
| Trivalent Chromium | 100,000 | 100,000 | --- | --- | NA | NA | NA | NA | NA | NA | NA | NA | NA | NA | NA | NA | NA |
| Hexavalent Chromium | 0.301 | 6 | --- | --- | NA | NA | NA | NA | NA | NA | NA | NA | NA | NA | NA | NA | NA |
| Lead | 400 | 800 | 27 | 52 | **410** | NA | NA | NA | NA | NA | NA | NA | NA | NA | NA | NA | NA |
| Mercury | 3.13 | 3.13 | 0.208 | --- | NA | NA | NA | NA | NA | NA | NA | NA | NA | NA | NA | NA | NA |
| Selenium | 391 | 5,840 | 0.52 | --- | NA | NA | NA | NA | NA | NA | NA | NA | NA | NA | NA | NA | NA |
| Silver | 391 | 5,840 | 0.8491 | --- | NA | NA | NA | NA | NA | NA | NA | NA | NA | NA | NA | NA | NA |
| **PAHs (mg/kg)** | | | | | | | | | | | | | | | | | |
| Acenaphthene | 3,590 | 45,200 | --- | --- | NA | NA | NA | NA | NA | NA | NA | NA | NA | NA | NA | NA | NA |
| Acenaphthylene | --- | --- | --- | --- | NA | NA | NA | NA | NA | NA | NA | NA | NA | NA | NA | NA | NA |
| Anthracene | 17,200 | 100,000 | 196.9492 | --- | NA | NA | NA | NA | NA | NA | NA | NA | NA | NA | NA | NA | NA |
| Benzo(a)anthracene | 1.14 | 20.8 | --- | --- | NA | NA | NA | NA | NA | NA | NA | NA | NA | NA | NA | NA | NA |
| Benzo(a)pyrene | 0.115 | 2.11 | 0.470 | --- | NA | NA | NA | NA | NA | NA | NA | NA | NA | NA | NA | NA | NA |
| Benzo(b)fluoranthene | 1.15 | 21.1 | 0.4793 | --- | NA | NA | NA | NA | NA | NA | NA | NA | NA | NA | NA | NA | NA |
| Benzo(g,h,i)perylene | --- | --- | --- | --- | NA | NA | NA | NA | NA | NA | NA | NA | NA | NA | NA | NA | NA |
| Benzo(k)fluoranthene | 11.5 | 211 | --- | --- | NA | NA | NA | NA | NA | NA | NA | NA | NA | NA | NA | NA | NA |
| Chrysene | 115 | 2,110 | 0.1446 | --- | NA | NA | NA | NA | NA | NA | NA | NA | NA | NA | NA | NA | NA |
| Dibenzo(a,h)anthracene | 0.115 | 2.11 | --- | --- | NA | NA | NA | NA | NA | NA | NA | NA | NA | NA | NA | NA | NA |
| Fluoranthene | 2,390 | 30,100 | 88.8778 | --- | NA | NA | NA | NA | NA | NA | NA | NA | NA | NA | NA | NA | NA |
| Fluorene | 2,390 | 30,100 | 14.8299 | --- | NA | NA | NA | NA | NA | NA | NA | NA | NA | NA | NA | NA | NA |
| Indeno(1,2,3-cd)pyrene | 1.15 | 21.1 | --- | --- | NA | NA | NA | NA | NA | NA | NA | NA | NA | NA | NA | NA | NA |
| 1-methyl naphthalene | 17.6 | 72.7 | --- | --- | NA | NA | NA | NA | NA | NA | NA | NA | NA | NA | NA | NA | NA |
| 2-methyl naphthalene | 239 | 3,010 | --- | --- | NA | NA | NA | NA | NA | NA | NA | NA | NA | NA | NA | NA | NA |
| Naphthalene | 5.52 | 24.1 | 0.6582 | --- | NA | NA | NA | NA | NA | NA | NA | NA | NA | NA | NA | NA | NA |
| Phenanthrene | --- | --- | --- | --- | NA | NA | NA | NA | NA | NA | NA | NA | NA | NA | NA | NA | NA |
| Pyrene | 1,790 | 22,600 | 54.5455 | --- | NA | NA | NA | NA | NA | NA | NA | NA | NA | NA | NA | NA | NA |
| Total Dectected PAHs | --- | --- | --- | --- | NA | NA | NA | NA | NA | NA | NA | NA | NA | NA | NA | NA | NA |

Bold values exceed protection of groundwater residual contaminant level
Boxed values exceed non-industrial direct contact residual contaminant level
Underlined values exceeded the background threshold value
Metals that exceed the background threshold values are compared to residual contaminant levels
--- - no standard established
B - Compound was found in the blank and sample
F1 - matrix spike and/or matrix spike duplicate recovery is outside acceptance limits
F2 - matrix spike/matrix spike duplicate relative percent difference exceeds control limits

**Table 1. Soil Analytical Results**

**Former Wayne Pigment Corp, 300 Barclay Street and 139 Oregon Street, Milwaukee, Wisconsin**

| PARAMETERS | Non-Industrial Direct Contact Residual Contaminant Level | Industrial Direct Contact RCL (mg/kg) | Protection of Groundwater Residual Contaminant Level | Background Threshold Value | Sample ID | | | | | | | | | | | | | |
|---|---|---|---|---|---|---|---|---|---|---|---|---|---|---|---|---|---|---|
| | | | | | V-19 | | V-20 | | V-21 | | V-22 | | V-23 | | V-24 | | V-25 | |
| Date Collected | | | | | 2/14/2017 | 2/14/2017 | 2/15/2017 | 2/15/2017 | 2/15/2017 | 2/15/2017 | 2/15/2017 | 2/15/2017 | 2/15/2017 | 2/15/2017 | 2/15/2017 | 2/15/2017 | 2/15/2017 | 2/15/2017 |
| Depth (feet bgs) | | | | | 4-6 | 6-8 | 4-6 | 6-8 | 4-6 | 6-8 | 4-6 | 6-8 | 4-6 | 6-8 | 4-6 | 6-8 | 4-6 | 6-8 |
| Saturated(s)/Unsaturated(u) | | | | | s | s | s | s | s | s | s | s | s | s | s | s | s | s |
| **VOCs (mg/kg)** | | | | | | | | | | | | | | | | | | |
| Benzene | 1.6 | 7.07 | 0.0051 | --- | <0.011 | <0.012 | <0.011 | **0.022** | <0.020 | <0.026 | <0.14 | <0.064 | <0.010 | <0.012 | <0.077 | <0.012 | <0.053 | <0.078 |
| Bromobenzene | 342 | 679 | --- | --- | <0.026 | <0.028 | <0.026 | <0.031 | <0.048 | <0.063 | <0.33 | <0.16 | <0.025 | <0.028 | <0.19 | <0.029 | <0.13 | <0.19 |
| Bromomethane | 9.6 | 43 | 0.0051 | --- | <0.057 | <0.063 | <0.059 | <0.070 | <0.11 | <0.14 | <0.74 | <0.35 | <0.056 | <0.063 | <0.42 | <0.066 | <0.29 | <0.43 |
| n-Butylbenzene | 108 | 108 | --- | --- | <0.024 | <0.027 | <0.025 | <0.030 | <0.045 | <0.059 | <0.31 | 1.4 | <0.027 | <0.026 | <0.18 | <0.028 | <0.12 | <0.18 |
| sec-Butylbenzene | 145 | 145 | --- | --- | <0.029 | <0.032 | <0.030 | <0.035 | <0.054 | <0.070 | <0.37 | 3.4 | <0.028 | <0.031 | <0.21 | <0.033 | <0.15 | <0.21 |
| tert-Butylbenzene | 183 | 183 | --- | --- | <0.029 | <0.032 | <0.030 | <0.035 | <0.054 | <0.070 | <0.37 | <0.17 | <0.028 | <0.031 | <0.21 | <0.033 | <0.15 | <0.21 |
| Chlorobenzene | 370 | 761 | --- | --- | <0.028 | <0.031 | <0.029 | <0.034 | <0.052 | <0.068 | <0.36 | <0.17 | <0.027 | <0.030 | <0.20 | <0.032 | <0.14 | <0.21 |
| Chloroethane | --- | --- | 0.2266 | --- | <0.036 | 0.11 | <0.037 | <0.045 | <0.068 | <0.089 | <0.47 | <0.22 | <0.036 | <0.040 | <0.27 | <0.042 | <0.18 | <0.27 |
| Chloroform | 0.454 | 1.98 | 0.0033 | --- | <0.027 | <0.029 | <0.027 | <0.033 | <0.050 | <0.066 | <0.34 | <0.16 | <0.026 | <0.029 | <0.20 | <0.031 | <0.13 | <0.20 |
| 1,1-Dichloroethane | 5.06 | 22.2 | 0.4828 | --- | 0.14 | **0.79** | 0.094 | **2.1** | 0.074 J | 0.35 | **1.0** | **0.70** | 0.047 J | 0.080 | 0.36 J | 0.46 | <0.15 | **2.7** |
| 1,2-Dichloroethane | 0.652 | 2.87 | 0.0028 | --- | <0.028* | <0.031* | <0.029 | <0.035 | <0.053 | <0.069 | <0.37 | <0.17 | <0.028 | <0.031 | <0.21 | <0.032 | <0.14 | <0.21 |
| 1,1-Dichloroethene | 320 | 1,190 | 0.005 | --- | <0.028 | <0.031 | <0.029 | <0.035 | <0.052 | <0.069 | <0.36 | <0.17 | <0.028 | <0.031 | <0.21 | **0.070 J** | <0.14 | **0.77** |
| cis-1,2-Dichloroethene | 156 | 2340 | 0.0412 | --- | **0.069 J** | **0.17** | **0.26** | **0.17** | **0.80** | **5.5** | **11** | **15** | **0.11** | **0.23** | **0.94** | **1.8** | **2.3** | **15** |
| trans-1,2-Dichloroethene | 1,560 | 1850 | 0.0626 | --- | <0.025 | **0.17** | <0.026 | <0.031 | <0.047 | **1.1** | <0.33 | **10** | <0.025 | <0.028 | <0.19 | **0.30** | <0.13 | **1.0** |
| Di-isopropyl ether | 2,260 | 2260 | --- | --- | <0.020 | <0.022 | <0.021 | <0.024 | <0.037 | <0.049 | <0.26 | <0.12 | <0.019 | <0.022 | <0.15 | <0.023 | <0.10 | <0.15 |
| Ethylbenzene | 8.03 | 35.4 | 1.57 | --- | <0.013 | <0.015 | <0.014 | <0.016 | <0.025 | 0.36 | **1.7** | 0.81 | <0.013 | <0.014 | 0.40 | 0.60 | <0.067 | **2.8** |
| Hexachlorobutadiene | 1.63 | 7.49 | --- | --- | <0.032 | <0.035 | <0.033 | <0.039 | <0.060 | <0.079 | <0.42 | <0.19 | <0.032 | <0.035 | <0.24 | <0.037 | <0.16 | <0.24 |
| Isopropylbenzene | --- | --- | --- | --- | <0.028 | <0.031 | <0.029 | <0.034 | <0.052 | <0.068 | <0.36 | 1.2 | <0.027 | <0.030 | <0.20 | 0.049 J | <0.14 | 0.24 J |
| p-Isopropyltoluene | 162 | 162 | --- | --- | <0.026 | <0.029 | <0.027 | <0.032 | <0.049 | <0.064 | <0.34 | 0.53 | <0.026 | <0.029 | <0.19 | <0.030 | <0.13 | <0.19 |
| 2-Butanone (MEK) | 28,400 | 28,400 | 1.6661 | --- | NA | NA | NA | NA | NA | NA | NA | NA | NA | NA | NA | NA | NA | NA |
| Methylene chloride | 61.8 | 1150 | 0.0026 | --- | <0.12 | <0.13 | <0.12 | <0.14 | <0.22 | <0.29 | <1.5 | <0.71 | <0.12 | <0.13 | <0.86 | <0.13 | <0.59 | <0.87 |
| Naphthalene | 5.52 | 24.1 | 0.6582 | --- | <0.024 | <0.027 | <0.025 | <0.030 | <0.045 | <0.059 | <0.31 | <0.15 | 0.089 | <0.026 | <0.18 | <0.028 | <0.12 | <0.18 |
| n-Propylbenzene | --- | --- | --- | --- | <0.030 | <0.033 | <0.031 | <0.037 | <0.056 | <0.064 | <0.39 | 1.1 | <0.029 | <0.033 | <0.19 | <0.034 | <0.15 | <0.22 |
| Styrene | 867 | 867 | 0.22 | --- | <0.028 | <0.031 | <0.029 | <0.034 | <0.052 | <0.068 | <0.36 | <0.17 | <0.027 | <0.030 | <0.20 | <0.032 | <0.14 | <0.21 |
| Tetrachloroethene | 33 | 145 | 0.0045 | --- | **0.17** | <0.029 | <0.027 | <0.033 | <0.050 | <0.066 | <0.34 | <0.16 | **0.041 J** | **0.038 J** | <0.20 | <0.031 | <0.13 | <0.20 |
| Toluene | 818 | 818 | 1.1072 | --- | 0.029 | <0.012 | <0.011 | 0.020 J | <0.020 | <0.026 | **1.3** | 0.50 | <0.010 | <0.012 | 0.45 | 0.45 | <0.054 | **2.3** |
| 1,2,3-Trichlorobenzene | 62.6 | 934 | --- | --- | <0.033 | <0.036 | <0.034 | <0.041 | <0.062 | <0.081 | <0.43 | <0.20 | <0.032 | <0.036 | <0.24 | <0.038 | <0.17 | <0.24 |
| 1,2,4-Trichlorobenzene | 24 | 113 | 0.408 | --- | <0.025* | <0.027* | <0.025 | <0.030 | <0.046 | <0.061 | <0.32 | <0.15 | <0.024 | <0.027 | <0.18 | <0.028 | <0.12 | <0.18 |
| 1,1,1-Trichloroethane | 640 | 640 | 0.1402 | --- | **1.3** | **0.47** | **0.32** | **0.25** | **2.1** | **1.6** | **15** | **4.6** | **0.19** | **0.18** | **3.6** | **1.4** | **2.5** | **16** |
| 1,1,2-Trichloroethane | 1.59 | 7.01 | 0.0032 | --- | <0.025 | <0.028 | <0.026 | <0.031 | <0.047 | <0.062 | <0.33 | <0.15 | <0.025 | <0.028 | <0.19 | <0.029 | <0.13 | <0.19 |
| Trichloroethene | 1.3 | 8.41 | 0.0036 | --- | **27** | **3.1** | **9.7** | **3.0** | **57** | **65** | **720** | **200** | **7.2** | **8.0** | **210** | **40** | **180** | **260** |
| Trichlorofluoromethane | 1,230 | 1230 | 4.4758 | --- | <0.031 | <0.034 | <0.032 | <0.038 | <0.058 | <0.076 | <0.40 | <0.19 | <0.030 | <0.034 | <0.23 | <0.035 | <0.16 | <0.23 |
| 1,2,3-Trimethylbenzene | 182 | 182 | --- | --- | NA | NA | NA | NA | NA | NA | NA | NA | NA | NA | NA | NA | NA | NA |
| 1,2,4-Trimethylbenzene | 219 | 219 | --- | --- | <0.026 | <0.028 | <0.027 | <0.032 | <0.048 | <0.063 | <0.33 | 5.5 | <0.025 | <0.028 | <0.19 | <0.030 | <0.13 | 0.69 |
| 1,3,5-Trimethylbenzene | 182 | 182 | --- | --- | <0.027 | <0.030 | <0.028 | <0.034 | <0.051 | <0.067 | <0.35 | 0.53 | <0.027 | <0.030 | <0.20 | <0.031 | <0.14 | <0.20 |
| Trimethylbenzenes | --- | --- | 1.3821 | --- | ND | ND | ND | ND | ND | ND | ND | **6.03** | ND | ND | ND | ND | ND | 0.69 |
| Vinyl Chloride | 0.067 | 2.08 | 0.0001 | --- | <0.019 | **0.059** | <0.019 | <0.023 | <0.035 | **2.1** | <0.24 | **2.2** | <0.019 | <0.021 | <0.14 | **0.080** | <0.096 | **0.53** |
| m&p-Xylene | --- | --- | --- | --- | NA | NA | NA | NA | NA | NA | NA | NA | NA | NA | NA | NA | NA | NA |
| o-Xylene | --- | --- | --- | --- | NA | NA | NA | NA | NA | NA | NA | NA | NA | NA | NA | NA | NA | NA |
| Xylenes | 260 | 260 | 3.96 | --- | 0.056 | <0.017 | <0.016 | <0.019 | 0.12 | 1.2 | 7.8 | 2.2 | 0.061 | <0.017 | 1.3 | 2.3 | 0.36 | 13 |

**Table 1. Soil Analytical Results**

**Former Wayne Pigment Corp, 300 Barclay Street and 139 Oregon Street, Milwaukee, Wisconsin**

| PARAMETERS | Non-Industrial Direct Contact Residual Contaminant Level | Industrial Direct Contact RCL (mg/kg) | Protection of Groundwater Residual Contaminant Level | Background Threshold Value | Sample ID | | | | | | | | | | | | | |
|---|---|---|---|---|---|---|---|---|---|---|---|---|---|---|---|---|---|---|
| | | | | | V-19 | | V-20 | | V-21 | | V-22 | | V-23 | | V-24 | | V-25 | |
| Date Collected | | | | | 2/14/2017 | 2/14/2017 | 2/15/2017 | 2/15/2017 | 2/15/2017 | 2/15/2017 | 2/15/2017 | 2/15/2017 | 2/15/2017 | 2/15/2017 | 2/15/2017 | 2/15/2017 | 2/15/2017 | 2/15/2017 |
| Depth (feet bgs) | | | | | 4-6 | 6-8 | 4-6 | 6-8 | 4-6 | 6-8 | 4-6 | 6-8 | 4-6 | 6-8 | 4-6 | 6-8 | 4-6 | 6-8 |
| Saturated(s)/Unsaturated(u) | | | | | s | s | s | s | s | s | s | s | s | s | s | s | s | s |
| **Metals (mg/kg)** | | | | | | | | | | | | | | | | | | |
| Arsenic | 0.677 | 3 | 0.584 | 8.0 | NA | NA | NA | NA | NA | NA | NA | NA | NA | NA | NA | NA | NA | NA |
| Barium | 15,300 | 100,000 | 164.8 | 364 | NA | NA | NA | NA | NA | NA | NA | NA | NA | NA | NA | NA | NA | NA |
| Cadmium | 71 | 985 | 0.752 | 1.0 | NA | NA | NA | NA | NA | NA | NA | NA | NA | NA | NA | NA | NA | NA |
| Chromium | --- | --- | 360,000 | 44 | NA | NA | NA | NA | NA | NA | NA | NA | NA | NA | NA | NA | NA | NA |
| Trivalent Chromium | 100,000 | 100,000 | --- | --- | NA | NA | NA | NA | NA | NA | NA | NA | NA | NA | NA | NA | NA | NA |
| Hexavalent Chromium | 0.301 | 6 | --- | --- | NA | NA | NA | NA | NA | NA | NA | NA | NA | NA | NA | NA | NA | NA |
| Lead | 400 | 800 | 27 | 52 | NA | NA | NA | NA | NA | NA | NA | NA | NA | NA | NA | NA | NA | NA |
| Mercury | 3.13 | 3.13 | 0.208 | --- | NA | NA | NA | NA | NA | NA | NA | NA | NA | NA | NA | NA | NA | NA |
| Selenium | 391 | 5,840 | 0.52 | --- | NA | NA | NA | NA | NA | NA | NA | NA | NA | NA | NA | NA | NA | NA |
| Silver | 391 | 5,840 | 0.8491 | --- | NA | NA | NA | NA | NA | NA | NA | NA | NA | NA | NA | NA | NA | NA |
| **PAHs (mg/kg)** | | | | | | | | | | | | | | | | | | |
| Acenaphthene | 3,590 | 45,200 | --- | --- | NA | NA | NA | NA | NA | NA | NA | NA | NA | NA | NA | NA | NA | NA |
| Acenaphthylene | --- | --- | --- | --- | NA | NA | NA | NA | NA | NA | NA | NA | NA | NA | NA | NA | NA | NA |
| Anthracene | 17,200 | 100,000 | 196.9492 | --- | NA | NA | NA | NA | NA | NA | NA | NA | NA | NA | NA | NA | NA | NA |
| Benzo(a)anthracene | 1.14 | 20.8 | --- | --- | NA | NA | NA | NA | NA | NA | NA | NA | NA | NA | NA | NA | NA | NA |
| Benzo(a)pyrene | 0.115 | 2.11 | 0.470 | --- | NA | NA | NA | NA | NA | NA | NA | NA | NA | NA | NA | NA | NA | NA |
| Benzo(b)fluoranthene | 1.15 | 21.1 | 0.4793 | --- | NA | NA | NA | NA | NA | NA | NA | NA | NA | NA | NA | NA | NA | NA |
| Benzo(g,h,i)perylene | --- | --- | --- | --- | NA | NA | NA | NA | NA | NA | NA | NA | NA | NA | NA | NA | NA | NA |
| Benzo(k)fluoranthene | 11.5 | 211 | --- | --- | NA | NA | NA | NA | NA | NA | NA | NA | NA | NA | NA | NA | NA | NA |
| Chrysene | 115 | 2,110 | 0.1446 | --- | NA | NA | NA | NA | NA | NA | NA | NA | NA | NA | NA | NA | NA | NA |
| Dibenzo(a,h)anthracene | 0.115 | 2.11 | --- | --- | NA | NA | NA | NA | NA | NA | NA | NA | NA | NA | NA | NA | NA | NA |
| Fluoranthene | 2,390 | 30,100 | 88.8778 | --- | NA | NA | NA | NA | NA | NA | NA | NA | NA | NA | NA | NA | NA | NA |
| Fluorene | 2,390 | 30,100 | 14.8299 | --- | NA | NA | NA | NA | NA | NA | NA | NA | NA | NA | NA | NA | NA | NA |
| Indeno(1,2,3-cd)pyrene | 1.15 | 21.1 | --- | --- | NA | NA | NA | NA | NA | NA | NA | NA | NA | NA | NA | NA | NA | NA |
| 1-methyl naphthalene | 17.6 | 72.7 | --- | --- | NA | NA | NA | NA | NA | NA | NA | NA | NA | NA | NA | NA | NA | NA |
| 2-methyl naphthalene | 239 | 3,010 | --- | --- | NA | NA | NA | NA | NA | NA | NA | NA | NA | NA | NA | NA | NA | NA |
| Naphthalene | 5.52 | 24.1 | 0.6582 | --- | NA | NA | NA | NA | NA | NA | NA | NA | NA | NA | NA | NA | NA | NA |
| Phenanthrene | --- | --- | --- | --- | NA | NA | NA | NA | NA | NA | NA | NA | NA | NA | NA | NA | NA | NA |
| Pyrene | 1,790 | 22,600 | 54.5455 | --- | NA | NA | NA | NA | NA | NA | NA | NA | NA | NA | NA | NA | NA | NA |
| Total Dectected PAHs | --- | --- | --- | --- | NA | NA | NA | NA | NA | NA | NA | NA | NA | NA | NA | NA | NA | NA |

Bold values exceed protection of groundwater residual contaminant level
Boxed values exceed non-industrial direct contact residual contaminant level
Underlined values exceeded the background threshold value
Metals that exceed the background threshold values are compared to residual contaminant levels
--- - no standard established
B - Compound was found in the blank and sample
F1 - matrix spike and/or matrix spike duplicate recovery is outside acceptance limits
F2 - matrix spike/matrix spike duplicate relative percent difference exceeds control limits

**Table 1. Soil Analytical Results**

**Former Wayne Pigment Corp, 300 Barclay Street and 139 Oregon Street, Milwaukee, Wisconsin**

| PARAMETERS | Non-Industrial Direct Contact Residual Contaminant Level | Industrial Direct Contact RCL (mg/kg) | Protection of Groundwater Residual Contaminant Level | Background Threshold Value | Sample ID | | | | | | | | | | | | | |
|---|---|---|---|---|---|---|---|---|---|---|---|---|---|---|---|---|---|---|
| | | | | | V-26 | | V-27 | | V-28 | | V-29 | | V-30 | | V-31 | | V-32 | |
| Date Collected | | | | | 2/15/2017 | 2/15/2017 | 2/15/2017 | 2/15/2017 | 2/14/2017 | 2/14/2017 | 2/14/2017 | 2/14/2017 | 2/15/2017 | 2/15/2017 | 2/15/2017 | 2/15/2017 | 2/15/2017 | 2/15/2017 |
| Depth (feet bgs) | | | | | 4-6 | 6-8 | 4-6 | 6-8 | 4-6 | 6-8 | 4-6 | 6-8 | 4-6 | 6-8 | 4-6 | 6-8 | 4-6 | 6-8 |
| Saturated(s)/Unsaturated(u) | | | | | s | s | s | s | s | s | s | s | s | s | s | s | s | s |
| **VOCs (mg/kg)** | | | | | | | | | | | | | | | | | | |
| Benzene | 1.6 | 7.07 | 0.0051 | --- | <0.011 | 0.019 | <0.011 | <0.0095 | <0.013 | <0.011 | <0.010 | <0.010 | <0.010 | **0.018** | <0.010 | **0.016 J** | <0.010 | **0.046** |
| Bromobenzene | 342 | 679 | --- | --- | <0.027 | <0.025 | <0.027 | <0.023 | <0.031 | <0.028 | <0.026 | <0.025 | <0.025 | <0.025 | <0.024 | <0.026 | <0.025 | <0.028 |
| Bromomethane | 9.6 | 43 | 0.0051 | --- | <0.060 | <0.057 | <0.059 | <0.052 | <0.068 | <0.062 | <0.057 | <0.056 | <0.057 | <0.056 | <0.054 | <0.059 | <0.057 | <0.062 |
| n-Butylbenzene | 108 | 108 | --- | --- | <0.025 | <0.024 | <0.025 | <0.022 | <0.029 | <0.026 | <0.024 | <0.024 | <0.024 | <0.023 | <0.026 | <0.029 | <0.028 | <0.026 |
| sec-Butylbenzene | 145 | 145 | --- | --- | <0.030 | <0.028 | <0.030 | <0.026 | <0.034 | <0.031 | <0.029 | <0.028 | <0.028 | <0.028 | <0.027 | <0.029 | <0.028 | <0.031 |
| tert-Butylbenzene | 183 | 183 | --- | --- | <0.030 | <0.028 | <0.030 | <0.026 | <0.034 | <0.031 | <0.029 | <0.028 | <0.028 | <0.028 | <0.027 | <0.029 | <0.028 | <0.031 |
| Chlorobenzene | 370 | 761 | --- | --- | <0.029 | <0.027 | <0.029 | <0.025 | <0.033 | <0.030 | <0.028 | <0.027 | <0.027 | <0.027 | <0.026 | <0.029 | <0.028 | <0.030 |
| Chloroethane | --- | --- | 0.2266 | --- | <0.038* | <0.036* | <0.038* | <0.033* | <0.043 | <0.039 | <0.036 | <0.035 | <0.036* | <0.035* | <0.034 * | <0.037 * | <0.036* | <0.039* |
| Chloroform | 0.454 | 1.98 | 0.0033 | --- | <0.028 | <0.026 | <0.028 | <0.024 | <0.032 | <0.029 | <0.027 | <0.026 | <0.026 | <0.026 | <0.025 | <0.027 | <0.026 | <0.029 |
| 1,1-Dichloroethane | 5.06 | 22.2 | 0.4828 | --- | 0.093 | 0.20 | <0.031 | <0.027 | <0.035 | <0.032 | 0.091 | <0.029 | 0.052 J | 0.21 | 0.13 | 0.28 | 0.15 | **5.4** |
| 1,2-Dichloroethane | 0.652 | 2.87 | 0.0028 | --- | <0.030 | <0.028 | <0.029 | <0.025 | <0.034* | <0.031* | <0.028* | <0.028* | <0.028 | <0.027 | <0.027 | <0.029 | <0.028 | <0.030 |
| 1,1-Dichloroethene | 320 | 1,190 | 0.005 | --- | <0.030 | <0.028 | <0.029 | <0.025 | <0.033 | <0.030 | <0.028 | <0.027 | <0.028 | <0.027 | <0.027 | <0.029 | <0.028 | **0.092** |
| cis-1,2-Dichloroethene | 156 | 2340 | 0.0412 | --- | **0.20** | **0.27** | **0.088** | **0.043 J** | <0.035 | <0.032 | **0.080** | <0.029 | <0.029 | **0.060 J** | **0.21** | **0.45** | **0.24** | **5.6** |
| trans-1,2-Dichloroethene | 1,560 | 1850 | 0.0626 | --- | <0.027 | <0.025 | <0.026 | <0.023 | <0.030 | <0.027 | <0.025 | <0.025 | <0.025 | <0.024 | 0.048 J | **0.12** | <0.025 | **4.1** |
| Di-isopropyl ether | 2,260 | 2260 | --- | --- | <0.021 | <0.020 | <0.021 | <0.018 | <0.024 | <0.021 | <0.020 | <0.019 | <0.020 | <0.019 | <0.019 | <0.020 | <0.020 | <0.021 |
| Ethylbenzene | 8.03 | 35.4 | 1.57 | --- | <0.014 | <0.013 | <0.014 | <0.012 | <0.016 | <0.014 | <0.013 | <0.013 | <0.013 | 0.017 | <0.012 | <0.014 | <0.013 | <0.014 |
| Hexachlorobutadiene | 1.63 | 7.49 | --- | --- | <0.034 | <0.032 | <0.033 | <0.029 | <0.038 | <0.035 | <0.032 | <0.031 | <0.032 | <0.031 | <0.030 | <0.033 | <0.032 | <0.035 |
| Isopropylbenzene | --- | --- | --- | --- | <0.029 | <0.027 | <0.029 | <0.025 | <0.033 | <0.030 | <0.028 | <0.027 | <0.027 | <0.027 | <0.026 | <0.028 | <0.027 | <0.030 |
| p-Isopropyltoluene | 162 | 162 | --- | --- | <0.027 | <0.026 | <0.027 | <0.023 | <0.031 | <0.028 | <0.026 | <0.025 | <0.026 | <0.025 | <0.025 | <0.027 | <0.026 | <0.028 |
| 2-Butanone (MEK) | 28,400 | 28,400 | 1.6661 | --- | NA | NA | NA | NA | NA | NA | NA | NA | NA | NA | NA | NA | NA | NA |
| Methylene chloride | 61.8 | 1150 | 0.0026 | --- | <0.12 | <0.12 | <0.12 | <0.11 | <0.14 | <0.13 | <0.12 | <0.11 | <0.12 | <0.11 | <0.11 | <0.12 | <0.12 | <0.13 |
| Naphthalene | 5.52 | 24.1 | 0.6582 | --- | <0.025 | <0.029 | <0.025 | <0.022 | <0.029 | <0.026 | <0.024 | <0.024 | <0.024 | <0.023 | <0.023 | <0.025 | <0.024 | <0.026 |
| n-Propylbenzene | --- | --- | --- | --- | <0.031 | <0.024 | <0.031 | <0.027 | <0.035 | <0.032 | <0.030 | <0.029 | <0.029 | <0.029 | <0.028 | <0.031 | <0.030 | <0.028 |
| Styrene | 867 | 867 | 0.22 | --- | <0.029 | <0.029 | <0.029 | <0.025 | <0.033 | <0.030 | <0.028 | <0.027 | <0.027 | <0.027 | <0.026 | <0.029 | <0.028 | <0.030 |
| Tetrachloroethene | 33 | 145 | 0.0045 | --- | <0.028 | <0.026 | <0.028 | <0.024 | <0.032 | <0.029 | <0.027 | <0.026 | <0.026 | <0.026 | <0.025 | <0.027 | **0.22** | <0.029 |
| Toluene | 818 | 818 | 1.1072 | --- | 0.030 | <0.010 | 0.038 | <0.0095 | <0.013 | <0.011 | 0.015 J | <0.010 | 0.016 J | 0.036 | 0.080 | 0.021 | <0.010 | 0.042 |
| 1,2,3-Trichlorobenzene | 62.6 | 934 | --- | --- | <0.035 | <0.033 | <0.034 | <0.030 | <0.039 | <0.036 | <0.033 | <0.032 | <0.033 | <0.032 | <0.031 | <0.034 | <0.033 | <0.035 |
| 1,2,4-Trichlorobenzene | 24 | 113 | 0.408 | --- | <0.026 | <0.024 | <0.025 | <0.022 | <0.029* | <0.027* | <0.025* | <0.024* | <0.024 | <0.024 | <0.023 | <0.025 | <0.024 | <0.026 |
| 1,1,1-Trichloroethane | 640 | 640 | 0.1402 | --- | 0.14 | 0.13 | <0.028 | <0.025 | <0.033 | <0.030 | 0.14 | <0.027 | 0.13 | <0.027 | **0.47** | **0.51** | **0.86** | 0.079 |
| 1,1,2-Trichloroethane | 1.59 | 7.01 | 0.0032 | --- | <0.027 | <0.025 | <0.026 | <0.023 | <0.030 | <0.027 | <0.025 | <0.025 | <0.025 | <0.025 | <0.024 | <0.026 | <0.025 | <0.027 |
| Trichloroethene | 1.3 | 8.41 | 0.0036 | --- | **3.1** | **1.5** | **3.1** | **0.47** | **0.22** | <0.013 | **2.0** | **0.23** | **0.79** | **0.53** | **6.6** | **9.8** | **21** | **3.0** |
| Trichlorofluoromethane | 1,230 | 1230 | 4.4758 | --- | <0.032* | <0.030* | <0.032* | <0.028* | <0.037 | <0.033 | <0.031 | <0.030 | <0.030* | <0.030* | <0.029 * | <0.032 * | <0.030* | <0.033* |
| 1,2,3-Trimethylbenzene | 182 | 182 | --- | --- | NA | NA | NA | NA | NA | NA | NA | NA | NA | NA | NA | NA | NA | NA |
| 1,2,4-Trimethylbenzene | 219 | 219 | --- | --- | <0.027 | <0.025 | <0.027 | <0.023 | <0.031 | <0.028 | <0.026 | <0.025 | <0.025 | <0.025 | <0.024 | <0.026 | <0.026 | <0.028 |
| 1,3,5-Trimethylbenzene | 182 | 182 | --- | --- | <0.029 | <0.027 | <0.028 | <0.025 | <0.033 | <0.030 | <0.027 | <0.027 | <0.027 | <0.027 | <0.026 | <0.028 | <0.027 | <0.029 |
| Trimethylbenzenes | --- | --- | 1.3821 | --- | ND | ND | ND | ND | ND | ND | ND | ND | ND | ND | ND | ND | ND | ND |
| Vinyl Chloride | 0.067 | 2.08 | 0.0001 | --- | <0.020* | <0.019* | <0.020* | <0.017* | **0.035 J** | **0.030 J** | <0.019 | <0.018 | <0.019* | <0.018* | <0.018 * | <0.019 * | <0.019* | **1.4 *** |
| m&p-Xylene | --- | --- | --- | --- | NA | NA | NA | NA | NA | NA | NA | NA | NA | NA | NA | NA | NA | NA |
| o-Xylene | --- | --- | --- | --- | NA | NA | NA | NA | NA | NA | NA | NA | NA | NA | NA | NA | NA | NA |
| Xylenes | 260 | 260 | 3.96 | --- | 0.022 J | <0.016 | <0.016 | <0.014 | 0.022 J | <0.017 | <0.016 | <0.015 | 0.020 J | 0.031 J | 0.072 | <0.016 | <0.016 | 0.027 J |

**Table 1. Soil Analytical Results**

**Former Wayne Pigment Corp, 300 Barclay Street and 139 Oregon Street, Milwaukee, Wisconsin**

| PARAMETERS | Non-Industrial Direct Contact Residual Contaminant Level | Industrial Direct Contact RCL (mg/kg) | Protection of Groundwater Residual Contaminant Level | Background Threshold Value | Sample ID | | | | | | | | | | | | | |
|---|---|---|---|---|---|---|---|---|---|---|---|---|---|---|---|---|---|---|
| | | | | | V-26 | | V-27 | | V-28 | | V-29 | | V-30 | | V-31 | | V-32 | |
| Date Collected | | | | | 2/15/2017 | 2/15/2017 | 2/15/2017 | 2/15/2017 | 2/14/2017 | 2/14/2017 | 2/14/2017 | 2/14/2017 | 2/15/2017 | 2/15/2017 | 2/15/2017 | 2/15/2017 | 2/15/2017 | 2/15/2017 |
| Depth (feet bgs) | | | | | 4-6 | 6-8 | 4-6 | 6-8 | 4-6 | 6-8 | 4-6 | 6-8 | 4-6 | 6-8 | 4-6 | 6-8 | 4-6 | 6-8 |
| Saturated(s)/Unsaturated(u) | | | | | s | s | s | s | s | s | s | s | s | s | s | s | s | s |
| **Metals (mg/kg)** | | | | | | | | | | | | | | | | | | |
| Arsenic | 0.677 | 3 | 0.584 | 8.0 | NA | NA | NA | NA | NA | NA | NA | NA | NA | NA | NA | NA | NA | NA |
| Barium | 15,300 | 100,000 | 164.8 | 364 | NA | NA | NA | NA | NA | NA | NA | NA | NA | NA | NA | NA | NA | NA |
| Cadmium | 71 | 985 | 0.752 | 1.0 | NA | NA | NA | NA | NA | NA | NA | NA | NA | NA | NA | NA | NA | NA |
| Chromium | --- | --- | 360,000 | 44 | NA | NA | NA | NA | NA | NA | NA | NA | NA | NA | NA | NA | NA | NA |
| Trivalent Chromium | 100,000 | 100,000 | --- | --- | NA | NA | NA | NA | NA | NA | NA | NA | NA | NA | NA | NA | NA | NA |
| Hexavalent Chromium | 0.301 | 6 | --- | --- | NA | NA | NA | NA | NA | NA | NA | NA | NA | NA | NA | NA | NA | NA |
| Lead | 400 | 800 | 27 | 52 | NA | NA | NA | NA | NA | NA | NA | NA | NA | NA | NA | NA | NA | NA |
| Mercury | 3.13 | 3.13 | 0.208 | --- | NA | NA | NA | NA | NA | NA | NA | NA | NA | NA | NA | NA | NA | NA |
| Selenium | 391 | 5,840 | 0.52 | --- | NA | NA | NA | NA | NA | NA | NA | NA | NA | NA | NA | NA | NA | NA |
| Silver | 391 | 5,840 | 0.8491 | --- | NA | NA | NA | NA | NA | NA | NA | NA | NA | NA | NA | NA | NA | NA |
| **PAHs (mg/kg)** | | | | | | | | | | | | | | | | | | |
| Acenaphthene | 3,590 | 45,200 | --- | --- | NA | NA | NA | NA | NA | NA | NA | NA | NA | NA | NA | NA | NA | NA |
| Acenaphthylene | --- | --- | --- | --- | NA | NA | NA | NA | NA | NA | NA | NA | NA | NA | NA | NA | NA | NA |
| Anthracene | 17,200 | 100,000 | 196.9492 | --- | NA | NA | NA | NA | NA | NA | NA | NA | NA | NA | NA | NA | NA | NA |
| Benzo(a)anthracene | 1.14 | 20.8 | --- | --- | NA | NA | NA | NA | NA | NA | NA | NA | NA | NA | NA | NA | NA | NA |
| Benzo(a)pyrene | 0.115 | 2.11 | 0.470 | --- | NA | NA | NA | NA | NA | NA | NA | NA | NA | NA | NA | NA | NA | NA |
| Benzo(b)fluoranthene | 1.15 | 21.1 | 0.4793 | --- | NA | NA | NA | NA | NA | NA | NA | NA | NA | NA | NA | NA | NA | NA |
| Benzo(g,h,i)perylene | --- | --- | --- | --- | NA | NA | NA | NA | NA | NA | NA | NA | NA | NA | NA | NA | NA | NA |
| Benzo(k)fluoranthene | 11.5 | 211 | --- | --- | NA | NA | NA | NA | NA | NA | NA | NA | NA | NA | NA | NA | NA | NA |
| Chrysene | 115 | 2,110 | 0.1446 | --- | NA | NA | NA | NA | NA | NA | NA | NA | NA | NA | NA | NA | NA | NA |
| Dibenzo(a,h)anthracene | 0.115 | 2.11 | --- | --- | NA | NA | NA | NA | NA | NA | NA | NA | NA | NA | NA | NA | NA | NA |
| Fluoranthene | 2,390 | 30,100 | 88.8778 | --- | NA | NA | NA | NA | NA | NA | NA | NA | NA | NA | NA | NA | NA | NA |
| Fluorene | 2,390 | 30,100 | 14.8299 | --- | NA | NA | NA | NA | NA | NA | NA | NA | NA | NA | NA | NA | NA | NA |
| Indeno(1,2,3-cd)pyrene | 1.15 | 21.1 | --- | --- | NA | NA | NA | NA | NA | NA | NA | NA | NA | NA | NA | NA | NA | NA |
| 1-methyl naphthalene | 17.6 | 72.7 | --- | --- | NA | NA | NA | NA | NA | NA | NA | NA | NA | NA | NA | NA | NA | NA |
| 2-methyl naphthalene | 239 | 3,010 | --- | --- | NA | NA | NA | NA | NA | NA | NA | NA | NA | NA | NA | NA | NA | NA |
| Naphthalene | 5.52 | 24.1 | 0.6582 | --- | NA | NA | NA | NA | NA | NA | NA | NA | NA | NA | NA | NA | NA | NA |
| Phenanthrene | --- | --- | --- | --- | NA | NA | NA | NA | NA | NA | NA | NA | NA | NA | NA | NA | NA | NA |
| Pyrene | 1,790 | 22,600 | 54.5455 | --- | NA | NA | NA | NA | NA | NA | NA | NA | NA | NA | NA | NA | NA | NA |
| Total Dectected PAHs | --- | --- | --- | --- | NA | NA | NA | NA | NA | NA | NA | NA | NA | NA | NA | NA | NA | NA |

Bold values exceed protection of groundwater residual contaminant level
Boxed values exceed non-industrial direct contact residual contaminant level
Underlined values exceeded the background threshold value
Metals that exceed the background threshold values are compared to residual contaminant levels
--- - no standard established
B - Compound was found in the blank and sample
F1 - matrix spike and/or matrix spike duplicate recovery is outside acceptance limits
F2 - matrix spike/matrix spike duplicate relative percent difference exceeds control limits

**Table 1. Soil Analytical Results**

**Former Wayne Pigment Corp, 300 Barclay Street and 139 Oregon Street, Milwaukee, Wisconsin**

| PARAMETERS | Non-Industrial Direct Contact Residual Contaminant Level | Industrial Direct Contact RCL (mg/kg) | Protection of Groundwater Residual Contaminant Level | Background Threshold Value | Sample ID | | | | | | | | | | | | |
|---|---|---|---|---|---|---|---|---|---|---|---|---|---|---|---|---|---|
| | | | | | V-33 | | V-34 | | V-35 | | V-36 | | V-37 | | V-38 | | |
| Date Collected | | | | | 2/15/2017 | 2/15/2017 | 2/15/2017 | 2/15/2017 | 2/15/2017 | 2/15/2017 | 2/15/2017 | 2/15/2017 | 2/14/2017 | 2/14/2017 | 2/14/2017 | 2/14/2017 | 2/14/2017 |
| Depth (feet bgs) | | | | | 4-6 | 6-8 | 4-6 | 6-8 | 4-6 | 6-8 | 4-6 | 6-8 | 4-6 | 6-8 | 3-5 | 4-6 | 6-8 |
| Saturated(s)/Unsaturated(u) | | | | | s | s | s | s | s | s | s | s | s | s | s | s | s |
| **VOCs (mg/kg)** | | | | | | | | | | | | | | | | | |
| Benzene | 1.6 | 7.07 | 0.0051 | --- | **0.017 J** | <0.029 | **0.025** | **0.023** | <0.017 | <0.066 | 0.031 | **0.028** | 0.011 J | **0.22** | NA | <0.011 | <0.010 |
| Bromobenzene | 342 | 679 | --- | --- | <0.029 | <0.071 | <0.024 | <0.026 | <0.042 | <0.16 | <0.027 | <0.028 | <0.032 | <0.17 | NA | <0.026 | <0.025 |
| Bromomethane | 9.6 | 43 | 0.0051 | --- | <0.064 | <0.16 | <0.053 | <0.059 | <0.094 | <0.36 | <0.061 | <0.063 | <0.071 | <0.39 | NA | <0.059 | <0.055 |
| n-Butylbenzene | 108 | 108 | --- | --- | <0.027 | <0.067 | <0.026 | <0.025 | <0.039 | <0.18 | <0.025 | <0.026 | <0.030 | <0.16 | NA | <0.025 | <0.023 |
| sec-Butylbenzene | 145 | 145 | --- | --- | <0.032 | <0.079 | <0.027 | <0.029 | <0.047 | <0.18 | <0.030 | <0.031 | <0.036 | <0.19 | NA | <0.030 | <0.028 |
| tert-Butylbenzene | 183 | 183 | --- | --- | <0.032 | <0.079 | <0.027 | <0.029 | <0.047 | <0.18 | <0.030 | <0.031 | <0.036 | <0.19 | NA | <0.030 | <0.028 |
| Chlorobenzene | 370 | 761 | --- | --- | <0.031 | <0.077 | <0.026 | <0.028 | <0.045 | <0.17 | <0.029 | <0.030 | <0.034 | <0.19 | NA | <0.029 | <0.027 |
| Chloroethane | --- | --- | 0.2266 | --- | <0.041* | <0.10* | <0.034 F1* | <0.037* | <0.059* | <0.23* | <0.038* | <0.040* | <0.045 | <0.25 | NA | <0.038 | <0.035 |
| Chloroform | 0.454 | 1.98 | 0.0033 | --- | <0.030 | <0.074 | <0.025 | <0.027 | <0.044 | <0.17 | <0.028 | <0.029 | <0.033 | <0.18 | NA | <0.028 | <0.026 |
| 1,1-Dichloroethane | 5.06 | 22.2 | 0.4828 | --- | 0.35 | **8.6** | 0.12 | **3.6** | 0.13 | <0.19 | **2.4** | **1.8** | <0.037 | **0.95** | NA | <0.031 | 0.44 |
| 1,2-Dichloroethane | 0.652 | 2.87 | 0.0028 | --- | **0.039 J** | <0.078 | <0.026 | <0.029 | <0.046 | <0.18 | <0.030 | <0.031 | <0.035* | <0.19* | NA | <0.029* | <0.027* |
| 1,1-Dichloroethene | 320 | 1,190 | 0.005 | --- | **0.094** | **0.61** | **0.050 J** | <0.029 | <0.046 | <0.18 | **0.085** | **0.071 J** | **0.12** | **1.4** | NA | **0.047 J** | **0.051 J** |
| cis-1,2-Dichloroethene | 156 | 2340 | 0.0412 | --- | **0.40** | **18** | **0.076** | **0.22** | **3.1** | **0.91** | **0.44** | **0.87** | <0.036 | **1.9** | NA | 0.040 J | **0.13** |
| trans-1,2-Dichloroethene | 1,560 | 1850 | 0.0626 | --- | **0.26** | **4.9** | <0.023 | <0.026 | **0.84** | <0.16 | 0.041 J | **0.36** | <0.031 | **0.92** | NA | <0.026 | **0.096** |
| Di-isopropyl ether | 2,260 | 2260 | --- | --- | <0.022 | <0.055 | <0.018 | <0.020 | <0.032 | <0.12 | <0.021 | <0.022 | <0.025 | <0.13 | NA | <0.021 | <0.019 |
| Ethylbenzene | 8.03 | 35.4 | 1.57 | --- | <0.015 | <0.036 | 0.040 | <0.013 | <0.022 | <0.083 | <0.014 | <0.014 | <0.016 | <0.089 | NA | <0.014 | <0.013 |
| Hexachlorobutadiene | 1.63 | 7.49 | --- | --- | <0.036 | <0.089 | <0.030 | <0.033 | <0.053 | <0.20 | <0.034 | <0.035 | <0.040 | <0.22 | NA | <0.033 | <0.031 |
| Isopropylbenzene | --- | --- | --- | --- | <0.031 | <0.076 | <0.026 | <0.028 | <0.045 | <0.17 | <0.029 | <0.030 | <0.034 | <0.19 | NA | <0.029 | <0.027 |
| p-Isopropyltoluene | 162 | 162 | --- | --- | <0.029 | <0.072 | <0.024 | <0.027 | <0.043 | <0.16 | <0.028 | 0.17 | <0.032 | <0.18 | NA | <0.027 | <0.025 |
| 2-Butanone (MEK) | 28,400 | 28,400 | 1.6661 | --- | NA | NA | NA | NA | NA | NA | NA | NA | NA | NA | NA | NA | NA |
| Methylene chloride | 61.8 | 1150 | 0.0026 | --- | <0.13 | <0.32 | <0.11 | <0.12 | <0.19 | <0.74 | <0.12 | <0.13 | <0.15 | <0.79 | NA | <0.12 | <0.11 |
| Naphthalene | 5.52 | 24.1 | 0.6582 | --- | <0.027 | <0.067 | **2.8** | <0.025 | <0.039 | 0.52 | <0.025 | <0.026 | <0.030 | <0.16 | NA | <0.025 | <0.023 |
| n-Propylbenzene | --- | --- | --- | --- | <0.033 | <0.082 | <0.028 | <0.030 | <0.049 | <0.19 | <0.030 | <0.033 | <0.037 | <0.20 | NA | <0.031 | <0.029 |
| Styrene | 867 | 867 | 0.22 | --- | <0.031 | <0.077 | <0.026 | <0.028 | <0.045 | <0.17 | <0.029 | <0.030 | <0.034 | <0.19 | NA | <0.029 | <0.027 |
| Tetrachloroethene | 33 | 145 | 0.0045 | --- | **1.0** | <0.074 | **0.27** | <0.027 | **0.31** | **1.3** | <0.028 | <0.029 | **2.2** | **3.8** | NA | **0.38** | <0.026 |
| Toluene | 818 | 818 | 1.1072 | --- | 0.021 | 0.057 | 0.23 | 0.031 | 0.16 | 0.74 | 0.023 | 0.027 | 0.036 | <0.072 | NA | <0.011 | <0.010 |
| 1,2,3-Trichlorobenzene | 62.6 | 934 | --- | --- | <0.037 | <0.091 | <0.031 | <0.034 | <0.054 | <0.21 | <0.035 | <0.036 | <0.041 | <0.22 | NA | <0.034 | <0.032 |
| 1,2,4-Trichlorobenzene | 24 | 113 | 0.408 | --- | <0.028 | <0.068 | <0.023 | <0.025 | <0.040 | <0.15 | <0.026 | <0.027 | <0.031* | <0.17* | NA | <0.025* | <0.024* |
| 1,1,1-Trichloroethane | 640 | 640 | 0.1402 | --- | **2.1** | **0.73** | **1.2** | 0.075 | **1.9** | **7.0** | **0.94** | **0.39** | **5.8** | **38** | NA | **1.7** | **0.67** |
| 1,1,2-Trichloroethane | 1.59 | 7.01 | 0.0032 | --- | <0.028 | <0.070 | <0.024 | <0.026 | <0.041 | <0.16 | <0.027 | <0.028 | <0.031 | <0.17 | NA | <0.026 | <0.025 |
| Trichloroethene | 1.3 | 8.41 | 0.0036 | --- | **37** | **82** | **8.9** | **1.3** | **54** | **150** | **1.9** | **0.98** | **21** | **410** | NA | **23** | **4.1** |
| Trichlorofluoromethane | 1,230 | 1230 | 4.4758 | --- | <0.035* | <0.085* | <0.029* | <0.032* | <0.050* | <0.19* | <0.033* | <0.034* | <0.038 | <0.21 | NA | <0.032 | <0.030 |
| 1,2,3-Trimethylbenzene | 182 | 182 | --- | --- | NA | NA | NA | NA | NA | NA | NA | NA | NA | NA | NA | NA | NA |
| 1,2,4-Trimethylbenzene | 219 | 219 | --- | --- | <0.029 | <0.071 | 0.053 J | <0.026 | <0.042 | <0.16 | <0.027 | <0.028 | <0.032 | <0.17 | NA | <0.027 | <0.025 |
| 1,3,5-Trimethylbenzene | 182 | 182 | --- | --- | <0.031 | <0.076 | <0.025 | <0.028 | <0.045 | <0.17 | <0.029 | <0.030 | <0.034 | <0.18 | NA | <0.028 | <0.026 |
| Trimethylbenzenes | --- | --- | 1.3821 | --- | ND | ND | 0.053 | ND | ND | ND | ND | ND | ND | ND | NA | ND | ND |
| Vinyl Chloride | 0.067 | 2.08 | 0.0001 | --- | <0.021* | **0.97 *** | <0.018* | **0.10 *** | **0.036 J*** | <0.12* | **0.065 *** | **0.085 *** | <0.023 | <0.13 | NA | <0.019 | <0.018 |
| m&p-Xylene | --- | --- | --- | --- | NA | NA | NA | NA | NA | NA | NA | NA | NA | NA | NA | NA | NA |
| o-Xylene | --- | --- | --- | --- | NA | NA | NA | NA | NA | NA | NA | NA | NA | NA | NA | NA | NA |
| Xylenes | 260 | 260 | 3.96 | --- | <0.018 | <0.044 | 0.20 | <0.016 | 0.14 | 1.0 | 0.026 J | <0.017 | <0.020 | <0.11 | NA | <0.016 | <0.015 |

**Table 1. Soil Analytical Results**

**Former Wayne Pigment Corp, 300 Barclay Street and 139 Oregon Street, Milwaukee, Wisconsin**

| PARAMETERS | Non-Industrial Direct Contact Residual Contaminant Level | Industrial Direct Contact RCL (mg/kg) | Protection of Groundwater Residual Contaminant Level | Background Threshold Value | Sample ID | | | | | | | | | | | | |
|---|---|---|---|---|---|---|---|---|---|---|---|---|---|---|---|---|---|
| | | | | | V-33 | | V-34 | | V-35 | | V-36 | | V-37 | | V-38 | | |
| Date Collected | | | | | 2/15/2017 | 2/15/2017 | 2/15/2017 | 2/15/2017 | 2/15/2017 | 2/15/2017 | 2/15/2017 | 2/15/2017 | 2/14/2017 | 2/14/2017 | 2/14/2017 | 2/14/2017 | 2/14/2017 |
| Depth (feet bgs) | | | | | 4-6 | 6-8 | 4-6 | 6-8 | 4-6 | 6-8 | 4-6 | 6-8 | 4-6 | 6-8 | 3-5 | 4-6 | 6-8 |
| Saturated(s)/Unsaturated(u) | | | | | s | s | s | s | s | s | s | s | s | s | s | s | s |
| **Metals (mg/kg)** | | | | | | | | | | | | | | | | | |
| Arsenic | 0.677 | 3 | 0.584 | 8.0 | NA | NA | NA | NA | NA | NA | NA | NA | NA | NA | NA | NA | NA |
| Barium | 15,300 | 100,000 | 164.8 | 364 | NA | NA | NA | NA | NA | NA | NA | NA | NA | NA | NA | NA | NA |
| Cadmium | 71 | 985 | 0.752 | 1.0 | NA | NA | NA | NA | NA | NA | NA | NA | NA | NA | NA | NA | NA |
| Chromium | --- | --- | 360,000 | 44 | NA | NA | NA | NA | NA | NA | NA | NA | NA | NA | NA | NA | NA |
| Trivalent Chromium | 100,000 | 100,000 | --- | --- | NA | NA | NA | NA | NA | NA | NA | NA | NA | NA | NA | NA | NA |
| Hexavalent Chromium | 0.301 | 6 | --- | --- | NA | NA | NA | NA | NA | NA | NA | NA | NA | NA | NA | NA | NA |
| Lead | 400 | 800 | 27 | 52 | NA | NA | NA | NA | NA | NA | NA | NA | NA | NA | **70** | NA | NA |
| Mercury | 3.13 | 3.13 | 0.208 | --- | NA | NA | NA | NA | NA | NA | NA | NA | NA | NA | NA | NA | NA |
| Selenium | 391 | 5,840 | 0.52 | --- | NA | NA | NA | NA | NA | NA | NA | NA | NA | NA | NA | NA | NA |
| Silver | 391 | 5,840 | 0.8491 | --- | NA | NA | NA | NA | NA | NA | NA | NA | NA | NA | NA | NA | NA |
| **PAHs (mg/kg)** | | | | | | | | | | | | | | | | | |
| Acenaphthene | 3,590 | 45,200 | --- | --- | NA | NA | NA | NA | NA | NA | NA | NA | NA | NA | NA | NA | NA |
| Acenaphthylene | --- | --- | --- | --- | NA | NA | NA | NA | NA | NA | NA | NA | NA | NA | NA | NA | NA |
| Anthracene | 17,200 | 100,000 | 196.9492 | --- | NA | NA | NA | NA | NA | NA | NA | NA | NA | NA | NA | NA | NA |
| Benzo(a)anthracene | 1.14 | 20.8 | --- | --- | NA | NA | NA | NA | NA | NA | NA | NA | NA | NA | NA | NA | NA |
| Benzo(a)pyrene | 0.115 | 2.11 | 0.470 | --- | NA | NA | NA | NA | NA | NA | NA | NA | NA | NA | NA | NA | NA |
| Benzo(b)fluoranthene | 1.15 | 21.1 | 0.4793 | --- | NA | NA | NA | NA | NA | NA | NA | NA | NA | NA | NA | NA | NA |
| Benzo(g,h,i)perylene | --- | --- | --- | --- | NA | NA | NA | NA | NA | NA | NA | NA | NA | NA | NA | NA | NA |
| Benzo(k)fluoranthene | 11.5 | 211 | --- | --- | NA | NA | NA | NA | NA | NA | NA | NA | NA | NA | NA | NA | NA |
| Chrysene | 115 | 2,110 | 0.1446 | --- | NA | NA | NA | NA | NA | NA | NA | NA | NA | NA | NA | NA | NA |
| Dibenzo(a,h)anthracene | 0.115 | 2.11 | --- | --- | NA | NA | NA | NA | NA | NA | NA | NA | NA | NA | NA | NA | NA |
| Fluoranthene | 2,390 | 30,100 | 88.8778 | --- | NA | NA | NA | NA | NA | NA | NA | NA | NA | NA | NA | NA | NA |
| Fluorene | 2,390 | 30,100 | 14.8299 | --- | NA | NA | NA | NA | NA | NA | NA | NA | NA | NA | NA | NA | NA |
| Indeno(1,2,3-cd)pyrene | 1.15 | 21.1 | --- | --- | NA | NA | NA | NA | NA | NA | NA | NA | NA | NA | NA | NA | NA |
| 1-methyl naphthalene | 17.6 | 72.7 | --- | --- | NA | NA | NA | NA | NA | NA | NA | NA | NA | NA | NA | NA | NA |
| 2-methyl naphthalene | 239 | 3,010 | --- | --- | NA | NA | NA | NA | NA | NA | NA | NA | NA | NA | NA | NA | NA |
| Naphthalene | 5.52 | 24.1 | 0.6582 | --- | NA | NA | NA | NA | NA | NA | NA | NA | NA | NA | NA | NA | NA |
| Phenanthrene | --- | --- | --- | --- | NA | NA | NA | NA | NA | NA | NA | NA | NA | NA | NA | NA | NA |
| Pyrene | 1,790 | 22,600 | 54.5455 | --- | NA | NA | NA | NA | NA | NA | NA | NA | NA | NA | NA | NA | NA |
| Total Dectected PAHs | --- | --- | --- | --- | NA | NA | NA | NA | NA | NA | NA | NA | NA | NA | NA | NA | NA |

Bold values exceed protection of groundwater residual contaminant level
Boxed values exceed non-industrial direct contact residual contaminant level
Underlined values exceeded the background threshold value
Metals that exceed the background threshold values are compared to residual contaminant levels
--- - no standard established
B - Compound was found in the blank and sample
F1 - matrix spike and/or matrix spike duplicate recovery is outside acceptance limits
F2 - matrix spike/matrix spike duplicate relative percent difference exceeds control limits

**Table 1. Soil Analytical Results**

**Former Wayne Pigment Corp, 300 Barclay Street and 139 Oregon Street, Milwaukee, Wisconsin**

| PARAMETERS | Non-Industrial Direct Contact Residual Contaminant Level | Industrial Direct Contact RCL (mg/kg) | Protection of Groundwater Residual Contaminant Level | Background Threshold Value | Sample ID | | | | | | | |
|---|---|---|---|---|---|---|---|---|---|---|---|---|
| | | | | | V-39 | | V-40 | | V-41 | | V-42 | |
| Date Collected | | | | | 2/14/2017 | 2/14/2017 | 2/14/2017 | 2/14/2017 | 2/14/2017 | 2/14/2017 | 2/14/2017 | 2/14/2017 |
| Depth (feet bgs) | | | | | 4-6 | 6-8 | 4-6 | 6-8 | 4-6 | 6-8 | 4-6 | 6-8 |
| Saturated(s)/Unsaturated(u) | | | | | s | s | s | s | s | s | s | s |
| **VOCs (mg/kg)** | | | | | | | | | | | | |
| Benzene | 1.6 | 7.07 | 0.0051 | --- | <0.016 | <0.013 | <0.010 | <0.010 | <0.013 | <0.014 | <0.015 | <0.013 |
| Bromobenzene | 342 | 679 | --- | --- | <0.040 | <0.031 | <0.025 | <0.025 | <0.030 | <0.035 | <0.036 | <0.032 |
| Bromomethane | 9.6 | 43 | 0.0051 | --- | <0.090 | <0.070 | <0.055 | <0.056 | <0.068 | <0.079 | <0.081 | <0.072 |
| n-Butylbenzene | 108 | 108 | --- | --- | <0.038 | <0.029 | 0.25 | <0.024 | <0.029 | <0.033 | <0.034 | <0.030 |
| sec-Butylbenzene | 145 | 145 | --- | --- | <0.045 | <0.035 | <0.028 | <0.028 | <0.034 | <0.039 | <0.041 | <0.036 |
| tert-Butylbenzene | 183 | 183 | --- | --- | <0.045 | <0.035 | <0.028 | <0.028 | <0.034 | <0.039 | <0.041 | <0.036 |
| Chlorobenzene | 370 | 761 | --- | --- | <0.043 | <0.034 | <0.027 | <0.027 | <0.033 | <0.038 | <0.040 | <0.035 |
| Chloroethane | --- | --- | 0.2266 | --- | <0.057 | <0.044 | <0.035 | <0.036 | <0.043 | <0.050 | <0.052 | <0.046 |
| Chloroform | 0.454 | 1.98 | 0.0033 | --- | <0.042 | <0.033 | <0.026 | <0.026 | <0.032 | <0.037 | <0.038 | <0.033 |
| 1,1-Dichloroethane | 5.06 | 22.2 | 0.4828 | --- | **0.81** | <0.036 | <0.028 | <0.029 | 0.078 J | 0.077 J | 0.33 | <0.037 |
| 1,2-Dichloroethane | 0.652 | 2.87 | 0.0028 | --- | <0.044* | <0.035* | <0.027* | <0.028* | <0.034* | <0.039* | <0.040* | <0.035* |
| 1,1-Dichloroethene | 320 | 1,190 | 0.005 | --- | <0.044 | <0.034 | <0.027 | <0.027 | <0.033 | <0.039 | <0.040 | <0.035 |
| cis-1,2-Dichloroethene | 156 | 2340 | 0.0412 | --- | **3.3** | <0.036 | <0.028 | <0.029 | **0.19** | **0.22** | **0.11** | <0.037 |
| trans-1,2-Dichloroethene | 1,560 | 1850 | 0.0626 | --- | **0.13** | <0.031 | <0.024 | <0.025 | <0.030 | <0.035 | <0.036 | <0.032 |
| Di-isopropyl ether | 2,260 | 2260 | --- | --- | <0.031 | <0.024 | <0.019 | <0.019 | <0.024 | <0.027 | <0.028 | <0.025 |
| Ethylbenzene | 8.03 | 35.4 | 1.57 | --- | <0.021 | <0.016 | <0.013 | <0.013 | <0.016 | <0.018 | <0.019 | <0.017 |
| Hexachlorobutadiene | 1.63 | 7.49 | --- | --- | <0.050 | <0.039 | <0.031 | <0.031 | <0.038 | <0.044 | <0.046 | <0.040 |
| Isopropylbenzene | --- | --- | --- | --- | <0.043 | <0.034 | <0.027 | <0.027 | <0.033 | <0.038 | <0.039 | <0.035 |
| p-Isopropyltoluene | 162 | 162 | --- | --- | <0.041 | <0.032 | <0.025 | <0.026 | 0.99 | 1.0 F1 | <0.037 | <0.033 |
| 2-Butanone (MEK) | 28,400 | 28,400 | 1.6661 | --- | NA | NA | NA | NA | NA | NA | NA | NA |
| Methylene chloride | 61.8 | 1150 | 0.0026 | --- | <0.18 | <0.14 | <0.11 | <0.11 | <0.14 | <0.16 | <0.17 | <0.15 |
| Naphthalene | 5.52 | 24.1 | 0.6582 | --- | <0.038 | <0.029 | 0.25 | <0.024 | <0.029 | <0.033 | <0.042 | <0.030 |
| n-Propylbenzene | --- | --- | --- | --- | <0.047 | <0.037 | <0.029 | <0.026 | <0.035 | <0.041 | <0.040 | <0.033 |
| Styrene | 867 | 867 | 0.22 | --- | <0.043 | <0.034 | <0.027 | <0.027 | <0.033 | <0.038 | <0.040 | <0.035 |
| Tetrachloroethene | 33 | 145 | 0.0045 | --- | <0.042 | <0.033 | <0.026 | <0.026 | **0.048 J** | <0.037 | <0.038 | <0.033 |
| Toluene | 818 | 818 | 1.1072 | --- | <0.017 | 0.030 | 0.022 | <0.010 | 0.061 | 0.065 | <0.015 | <0.013 |
| 1,2,3-Trichlorobenzene | 62.6 | 934 | --- | --- | <0.052 | <0.040 | <0.032 | <0.032 | <0.039 | <0.045 | <0.047 | <0.041 |
| 1,2,4-Trichlorobenzene | 24 | 113 | 0.408 | --- | <0.039* | <0.030* | <0.024* | <0.024* | <0.029* | <0.034* | <0.035* | <0.031* |
| 1,1,1-Trichloroethane | 640 | 640 | 0.1402 | --- | **1.3** | <0.034 | <0.026 | <0.027 | **0.15** | **0.15** | **0.60** | <0.034 |
| 1,1,2-Trichloroethane | 1.59 | 7.01 | 0.0032 | --- | <0.040 | <0.031 | <0.024 | <0.025 | <0.030 | <0.035 | <0.036 | <0.032 |
| Trichloroethene | 1.3 | 8.41 | 0.0036 | --- | **22** | **0.11** | **1.6** | **0.025 J** | **1.8** | **1.7** | **4.0** | <0.015 |
| Trichlorofluoromethane | 1,230 | 1230 | 4.4758 | --- | <0.048 | <0.038 | <0.030 | <0.030 | <0.037 | <0.042 | <0.044 | <0.039 |
| 1,2,3-Trimethylbenzene | 182 | 182 | --- | --- | NA | NA | NA | NA | NA | NA | NA | NA |
| 1,2,4-Trimethylbenzene | 219 | 219 | --- | --- | <0.040 | <0.032 | <0.025 | <0.025 | <0.031 | <0.035 | <0.037 | <0.032 |
| 1,3,5-Trimethylbenzene | 182 | 182 | --- | --- | <0.043 | <0.034 | <0.026 | <0.027 | <0.033 | <0.038 | <0.039 | <0.034 |
| Trimethylbenzenes | --- | --- | 1.3821 | --- | ND | ND | ND | ND | ND | ND | ND | ND |
| Vinyl Chloride | 0.067 | 2.08 | 0.0001 | --- | **0.066** | <0.023 | <0.018 | <0.018 | <0.022 | <0.026 | <0.027 | <0.024 |
| m&p-Xylene | --- | --- | --- | --- | NA | NA | NA | NA | NA | NA | NA | NA |
| o-Xylene | --- | --- | --- | --- | NA | NA | NA | NA | NA | NA | NA | NA |
| Xylenes | 260 | 260 | 3.96 | --- | <0.025 | <0.019 | 0.060 | <0.016 | 0.051 | 0.054 | 0.086 | <0.020 |

**Table 1. Soil Analytical Results**

**Former Wayne Pigment Corp, 300 Barclay Street and 139 Oregon Street, Milwaukee, Wisconsin**

| PARAMETERS | Non-Industrial Direct Contact Residual Contaminant Level | Industrial Direct Contact RCL (mg/kg) | Protection of Groundwater Residual Contaminant Level | Background Threshold Value | Sample ID | | | | | | | |
|---|---|---|---|---|---|---|---|---|---|---|---|---|
| | | | | | V-39 | | V-40 | | V-41 | | V-42 | |
| Date Collected | | | | | 2/14/2017 | 2/14/2017 | 2/14/2017 | 2/14/2017 | 2/14/2017 | 2/14/2017 | 2/14/2017 | 2/14/2017 |
| Depth (feet bgs) | | | | | 4-6 | 6-8 | 4-6 | 6-8 | 4-6 | 6-8 | 4-6 | 6-8 |
| Saturated(s)/Unsaturated(u) | | | | | s | s | s | s | s | s | s | s |
| **Metals (mg/kg)** | | | | | | | | | | | | |
| Arsenic | 0.677 | 3 | 0.584 | 8.0 | NA | NA | NA | NA | NA | NA | NA | NA |
| Barium | 15,300 | 100,000 | 164.8 | 364 | NA | NA | NA | NA | NA | NA | NA | NA |
| Cadmium | 71 | 985 | 0.752 | 1.0 | NA | NA | NA | NA | NA | NA | NA | NA |
| Chromium | --- | --- | 360,000 | 44 | NA | NA | NA | NA | NA | NA | NA | NA |
| Trivalent Chromium | 100,000 | 100,000 | --- | --- | NA | NA | NA | NA | NA | NA | NA | NA |
| Hexavalent Chromium | 0.301 | 6 | --- | --- | NA | NA | NA | NA | NA | NA | NA | NA |
| Lead | 400 | 800 | 27 | 52 | NA | NA | NA | NA | NA | NA | NA | NA |
| Mercury | 3.13 | 3.13 | 0.208 | --- | NA | NA | NA | NA | NA | NA | NA | NA |
| Selenium | 391 | 5,840 | 0.52 | --- | NA | NA | NA | NA | NA | NA | NA | NA |
| Silver | 391 | 5,840 | 0.8491 | --- | NA | NA | NA | NA | NA | NA | NA | NA |
| **PAHs (mg/kg)** | | | | | | | | | | | | |
| Acenaphthene | 3,590 | 45,200 | --- | --- | NA | NA | NA | NA | NA | NA | NA | NA |
| Acenaphthylene | --- | --- | --- | --- | NA | NA | NA | NA | NA | NA | NA | NA |
| Anthracene | 17,200 | 100,000 | 196.9492 | --- | NA | NA | NA | NA | NA | NA | NA | NA |
| Benzo(a)anthracene | 1.14 | 20.8 | --- | --- | NA | NA | NA | NA | NA | NA | NA | NA |
| Benzo(a)pyrene | 0.115 | 2.11 | 0.470 | --- | NA | NA | NA | NA | NA | NA | NA | NA |
| Benzo(b)fluoranthene | 1.15 | 21.1 | 0.4793 | --- | NA | NA | NA | NA | NA | NA | NA | NA |
| Benzo(g,h,i)perylene | --- | --- | --- | --- | NA | NA | NA | NA | NA | NA | NA | NA |
| Benzo(k)fluoranthene | 11.5 | 211 | --- | --- | NA | NA | NA | NA | NA | NA | NA | NA |
| Chrysene | 115 | 2,110 | 0.1446 | --- | NA | NA | NA | NA | NA | NA | NA | NA |
| Dibenzo(a,h)anthracene | 0.115 | 2.11 | --- | --- | NA | NA | NA | NA | NA | NA | NA | NA |
| Fluoranthene | 2,390 | 30,100 | 88.8778 | --- | NA | NA | NA | NA | NA | NA | NA | NA |
| Fluorene | 2,390 | 30,100 | 14.8299 | --- | NA | NA | NA | NA | NA | NA | NA | NA |
| Indeno(1,2,3-cd)pyrene | 1.15 | 21.1 | --- | --- | NA | NA | NA | NA | NA | NA | NA | NA |
| 1-methyl naphthalene | 17.6 | 72.7 | --- | --- | NA | NA | NA | NA | NA | NA | NA | NA |
| 2-methyl naphthalene | 239 | 3,010 | --- | --- | NA | NA | NA | NA | NA | NA | NA | NA |
| Naphthalene | 5.52 | 24.1 | 0.6582 | --- | NA | NA | NA | NA | NA | NA | NA | NA |
| Phenanthrene | --- | --- | --- | --- | NA | NA | NA | NA | NA | NA | NA | NA |
| Pyrene | 1,790 | 22,600 | 54.5455 | --- | NA | NA | NA | NA | NA | NA | NA | NA |
| Total Dectected PAHs | --- | --- | --- | --- | NA | NA | NA | NA | NA | NA | NA | NA |

Bold values exceed protection of groundwater residual contaminant level
Boxed values exceed non-industrial direct contact residual contaminant level
Underlined values exceeded the background threshold value
Metals that exceed the background threshold values are compared to residual contaminant levels
--- - no standard established
B - Compound was found in the blank and sample
F1 - matrix spike and/or matrix spike duplicate recovery is outside acceptance limits
F2 - matrix spike/matrix spike duplicate relative percent difference exceeds control limits

**Table 2. Groundwater Analytical Results**
**Former Wayne Pigment Corp, 300 Barclay Street and 139 East Oregon Street, Milwaukee, Wisconsin**

| PARAMETERS | Preventive Action Limit | Enforcement Standard | TW-1 | TW-2 | TW-3 | TW-4 | TW-5 | TW-6 | TW-7 | TW-8 | TW-9 | TW-10 | TW-2 | TW-42 |
|---|---|---|---|---|---|---|---|---|---|---|---|---|---|---|
| Date Collected | | | 3/29/2006 | 3/29/2006 | 3/29/2006 | 3/29/2006 | 3/29/2006 | 3/29/2006 | 3/29/2006 | 3/29/2006 | 3/29/2006 | 3/29/2006 | 8/27/2015 | 9/19/2016 |
| **VOCs (ug/l)** | | | | | | | | | | | | | | |
| Acetone | 1800 | 9000 | NA | NA | NA | NA | NA | NA | NA | NA | NA | NA | NA | 7.6J |
| Benzene | 0.5 | 5 | <0.033 | <0.33 | <0.33 | <0.33 | *2.8* | *0.75* | <160 | <160 | 1.8 | <33 | *1.3* | <0.50 |
| n-Butylbenzene | --- | --- | <0.33 | <0.33 | <0.33 | <0.33 | <0.33 | <0.33 | 270 | <160 | <0.33 | <33 | <0.50 | <0.50 |
| sec-Butylbenzene | --- | --- | <0.33 | <0.33 | <0.33 | <0.33 | 25 | <0.33 | 250 | <160 | 0.66 | <33 | <2.2 | <2.2 |
| tert-Butylbenzene | --- | --- | <0.33 | <0.33 | <0.33 | <0.33 | 20 | 1.9 | <160 | <160 | <0.33 | <33 | <0.18 | <0.18 |
| Chlorobenzene | --- | --- | <0.33 | <0.33 | <0.33 | <0.33 | <0.33 | <0.33 | <160 | <160 | <0.33 | <33 | <0.50 | <0.50 |
| Chloroethane | 80 | 400 | <0.33 | <0.33 | <0.33 | <0.33 | <0.33 | <0.33 | <160 | <160 | <0.33 | <33 | <0.37 | <0.37 |
| Chloroform | 0.6 | 6 | <1.6 | <1.6 | <1.6 | <1.6 | <1.6 | <1.6 | <820 | <820 | <1.6 | <160 | <2.5 | <2.5 |
| Chloromethane | 3 | 30 | <0.33 | <0.33 | <0.33 | <0.33 | <0.33 | <0.33 | <160 | <160 | <0.33 | <33 | <0.50 | <0.50 |
| 1,1-Dichloroethane | 85 | 850 | 2.7 | 35 | 0.53 | 11 | <0.33 | <0.33 | <160 | <160 | <0.33 | <33 | <0.24 | <0.24 |
| 1,2-Dichloroethane | 0.5 | 5 | <0.33 | <0.33 | <0.33 | <0.33 | <0.33 | <0.33 | <160 | <160 | <0.33 | <33 | <0.17 | <0.17 |
| 1,1-Dichloroethene | 0.7 | 7 | <0.33 | <0.33 | <0.33 | <0.33 | <0.33 | <0.33 | <160 | <160 | <0.33 | <33 | <0.41 | <0.41 |
| cis-1,2,-Dichloroethene | 7 | 70 | <0.33 | 5.4 | 0.88 | 1.1 | 0.4 | <0.33 | <160 | <160 | <0.33 | <33 | <0.26 | <0.26 |
| trans-1,2-Dichloroethene | 20 | 100 | <0.33 | <0.33 | <0.33 | <0.33 | <0.33 | <0.33 | <160 | <160 | <0.33 | <33 | <0.26 | <0.26 |
| 1,2-Dichloropropane | 0.5 | 5 | <0.33 | <0.33 | <0.33 | <0.33 | <0.33 | <0.33 | <160 | <160 | <0.33 | <33 | <0.23 | <0.23 |
| Diisopropyl ether | --- | --- | NA | NA | NA | NA | NA | NA | NA | NA | NA | NA | <0.50 | 0.66J |
| Ethylbenzene | 140 | 700 | <0.33 | <0.33 | <0.33 | <0.33 | 4.4 | <0.33 | ***2,000*** | ***900*** | 2.1 | ***5,700*** | 0.96J | <0.50 |
| Isopropylbenzene | --- | --- | <0.33 | <0.33 | <0.33 | <0.33 | 8.2 | <0.33 | 610 | <160 | <0.33 | 110 | 1.3 | 0.25J |
| p-Isopropyltoluene | --- | --- | <0.33 | <0.33 | <0.33 | <0.33 | 11 | 2.5 | 510 | <160 | <0.33 | <33 | 6.5 | <0.50 |
| Methylene Chloride | 0.5 | 5 | <1.6 | <1.6 | <1.6 | <1.6 | <1.6 | <1.6 | <820 | <820 | <1.6 | <160 | <0.23 | <0.23 |
| Naphthalene | 10 | 100 | <1.6 | <1.6 | <1.6 | <1.6 | <1.6 | <1.6 | <820 | <820 | <1.6 | ***160*** | <2.5 | <2.5 |
| n-Propylbenzene | --- | --- | <0.33 | <0.33 | <0.33 | <0.33 | <0.33 | <0.33 | <160 | <160 | 0.6 | <33 | <0.50 | <0.50 |
| Styrene | 10 | 100 | <0.33 | <0.33 | <0.33 | <0.33 | <0.33 | <0.33 | <160 | <160 | <0.33 | <33 | <0.50 | <0.50 |
| Tetrachloroethene | 0.5 | 5 | <0.33 | <0.33 | <0.33 | <0.33 | <0.33 | <0.33 | <160 | <160 | <0.33 | <33 | <0.50 | <0.50 |
| Toluene | 160 | 800 | <1.6 | <1.6 | <1.6 | <1.6 | <1.6 | <1.6 | ***10,000*** | ***1,900*** | <1.6 | *250* | 23.1 | <0.50 |
| 1,1,1-Trichloroethane | 40 | 200 | 1.8 | *57* | <0.33 | *56* | <0.33 | <0.33 | <160 | <160 | <0.33 | <33 | <0.50 | <0.50 |
| 1,1,2-Trichloroethane | 0.5 | 5 | <0.33 | <0.33 | <0.33 | <0.33 | <0.33 | <0.33 | <160 | <160 | <0.33 | <33 | <0.20 | <0.20 |
| Trichloroethene | 0.5 | 5 | <0.33 | ***36*** | ***5.6*** | ***17*** | *0.98* | <0.33 | <160 | <160 | *1.7* | <33 | <0.33 | <0.33 |
| 1,2,4-Trimethylbenzene | --- | --- | <0.33 | <0.33 | <0.33 | <0.33 | 420 | 32 | 5,700 | 1,900 | 4.4 | 120 | <0.50 | <0.50 |
| 1,3,5-Trimethylbenzene | --- | -- | <0.33 | <0.33 | <0.33 | <0.33 | 1.1 | 3.6 | 2,600 | 980 | 2.3 | 36 | <0.50 | <0.50 |
| Trimethylbenzenes | 96 | 480 | <0.33 | <0.33 | <0.33 | <0.33 | *421.1* | <0.33 | ***8,300*** | ***2,880*** | <0.33 | <33 | <0.50 | <0.50 |
| Vinyl chloride | 0.02 | 0.2 | <0.33 | <0.33 | <0.33 | <0.33 | <0.33 | <0.33 | <160 | <160 | <0.33 | <33 | <0.18 | <0.18 |
| m&p Xylene | --- | --- | NA | NA | NA | NA | NA | NA | NA | NA | NA | NA | 9.0 | <1.0 |
| o-Xylene | --- | --- | NA | NA | NA | NA | NA | NA | NA | NA | NA | NA | 0.71J | <0.50 |
| Total Xylene | 400 | 2000 | <0.66 | <0.66 | <0.66 | <0.66 | 1.7 | 8 | ***19,000*** | ***8,100*** | 4.2 | ***12,000*** | 9.71J | <1.0 |

**Table 2. Groundwater Analytical Results**
**Former Wayne Pigment Corp, 300 Barclay Street and 139 East Oregon Street, Milwaukee, Wisconsin**

| PARAMETERS | Preventive Action Limit | Enforcement Standard | TW-1 | TW-2 | TW-3 | TW-4 | TW-5 | TW-6 | TW-7 | TW-8 | TW-9 | TW-10 | TW-2 | TW-42 |
|---|---|---|---|---|---|---|---|---|---|---|---|---|---|---|
| Date Collected | | | 3/29/2006 | 3/29/2006 | 3/29/2006 | 3/29/2006 | 3/29/2006 | 3/29/2006 | 3/29/2006 | 3/29/2006 | 3/29/2006 | 3/29/2006 | 8/27/2015 | 9/19/2016 |
| **RCRA Metals (ug/l)** | | | | | | | | | | | | | | |
| Arsenic, Dissolved | 1 | 10 | NA | NA | NA | NA | NA | NA | NA | NA | NA | NA | ***27.6*** | NA |
| Barium, Dissolved | 400 | 2000 | NA | NA | NA | NA | NA | NA | NA | NA | NA | NA | 64.4 | NA |
| Cadmium, Dissolved | 0.5 | 5 | NA | NA | NA | NA | NA | NA | NA | NA | NA | NA | <0.60 | NA |
| Chromium, Dissolved | 10 | 100 | NA | NA | NA | NA | NA | NA | NA | NA | NA | NA | <2.1 | NA |
| Chromium, Total | 10 | 100 | NA | NA | NA | NA | NA | NA | NA | NA | NA | NA | NA | NA |
| Hexavalent Chromium, Total | --- | --- | NA | NA | NA | NA | NA | NA | NA | NA | NA | NA | NA | NA |
| Trivalent Chromium, Total | --- | --- | NA | NA | NA | NA | NA | NA | NA | NA | NA | NA | NA | NA |
| Lead, Dissolved | 1.5 | 15 | NA | NA | NA | NA | NA | NA | NA | NA | NA | NA | <3.0 | NA |
| Selenium, Dissolved | 10 | 50 | NA | NA | NA | NA | NA | NA | NA | NA | NA | NA | <6.7 | NA |
| Silver, Dissolved | 10 | 50 | NA | NA | NA | NA | NA | NA | NA | NA | NA | NA | <2.7 | NA |
| Mercury, Dissolved | 0.2 | 2 | NA | NA | NA | NA | NA | NA | NA | NA | NA | NA | <0.10 | NA |
| **PAHs (ug/l)** | | | | | | | | | | | | | | |
| Acenaphthene | --- | --- | <0.36 | <0.36 | <0.36 | <0.36 | 6.0 | 0.78 | 68 | 9.6 | 4.0 | NA | 2.0 | NA |
| Acenaphthylene | --- | --- | <0.29 | <0.29 | <0.29 | <0.29 | <2.9 | 0.53 | 8.4 | 0.36 | <0.29 | NA | 2.1 | NA |
| Anthracene | 600 | 3000 | <0.35 | <0.35 | <0.35 | <0.35 | 6.8 | <0.35 | 100 | 7.6 | <0.35 | NA | 6.9 | NA |
| Benzo(a)anthracene | --- | --- | <0.30 | <0.30 | <0.30 | <0.30 | <3.0 | <0.30 | 100 | 6.9 | <0.30 | NA | 19.1 | NA |
| Benzo(a)pyrene | 0.02 | 0.2 | <0.29 | <0.29 | <0.29 | <0.29 | <2.9 | <0.29 | ***69*** | ***3.3*** | <0.29 | NA | ***20.0*** | NA |
| Benzo(b)fluoranthene | 0.02 | 0.2 | <0.36 | <0.36 | <0.36 | <0.36 | ***3.7*** | <0.36 | ***120*** | ***4.7*** | <0.36 | NA | ***24.9*** | NA |
| Benzo(g,h,i)perylene | --- | --- | <0.28 | <0.28 | <0.28 | <0.28 | <2.8 | <0.28 | 32 | 10 | <0.28 | NA | 11.3 | NA |
| Benzo(k)fluoranthene | --- | --- | <0.46 | <0.46 | <0.46 | <0.46 | <4.6 | <0.46 | 130 | 2.4 | <0.46 | NA | 10.1 | NA |
| Chrysene | 0.02 | 0.2 | <0.34 | <0.34 | <0.34 | <0.34 | <3.4 | <0.34 | ***84*** | ***4.8*** | <0.34 | NA | ***22.5*** | NA |
| Dibenzo(a,h)anthracene | --- | --- | <0.29 | <0.29 | <0.29 | <0.29 | <2.9 | <0.29 | 10 | 0.32 | <0.29 | NA | 2.5 | NA |
| Fluoranthrene | 80 | 400 | <0.25 | <0.25 | <0.25 | <0.25 | 10 | 0.39 | ***310*** | 24 | <0.25 | NA | 51.7 | NA |
| Fluorene | 80 | 400 | <0.30 | <0.30 | <0.30 | <0.30 | 7.6 | 0.46 | *91* | 7.4 | 1.1 | NA | 2.5 | NA |
| Indeno(1,2,3-cd)pyrene | --- | --- | <0.35 | <0.35 | <0.35 | <0.35 | <3.5 | <0.35 | 29 | 1.1 | <0.35 | NA | 9.9 | NA |
| 1-Methyl Naphthalene | --- | --- | NA | NA | NA | NA | NA | NA | NA | NA | NA | NA | 1.7 | NA |
| 2-Methyl Naphthalene | --- | --- | NA | NA | NA | NA | NA | NA | NA | NA | NA | NA | 1.7 | NA |
| Naphthalene | 10 | 100 | 0.59 | 0.3 | <0.25 | <0.25 | *33* | 3.3 | ***1,600*** | ***180*** | *32* | NA | 1.7 | NA |
| Phenanthrene | --- | --- | <0.20 | <0.20 | <0.20 | <0.20 | 20 | 1.4 | 440 | 46 | 1.6 | NA | 28.5 | NA |
| Pyrene | 50 | 250 | <0.29 | <0.29 | <0.29 | <0.29 | 8.7 | 0.29 | ***270*** | 21 | <0.29 | NA | 29.6 | NA |

*Notes:*
Bold concentrations exceed NR 140 enforcement standards
Italicized concentrations exceed NR 140 preventive action limits
--- - not analyzed
* Total metal concentration, not field filtered
J - Results between the limit of detection and limit of quantitation
NA - not analyzed or not available
PAHs - polycyclic aromatic hydrocarbons
RCRA - resource conservation recovery act
ug/l - micrograms per liter
VOCs - volatile organic compounds

**Table 2. Groundwater Analytical Results**
**Former Wayne Pigment Corp, 300 Barclay Street and 139 East Oregon S**

| PARAMETERS | Preventive Action Limit | Enforcement Standard | TW-45 | TW-47 | TW-50 | TW-51 | TW-52 | TW-54 | TW-57 | TW-59 | TW-61 | TW-83 | TW-85 | TW-86 |
|---|---|---|---|---|---|---|---|---|---|---|---|---|---|---|
| Date Collected | | | 9/19/2016 | 9/19/2016 | 9/19/2016 | 9/19/2016 | 9/19/2016 | 9/19/2016 | 9/19/2016 | 9/19/2016 | 9/19/2016 | 9/26/2016 | 9/26/2016 | 9/26/2016 |
| **VOCs (ug/l)** | | | | | | | | | | | | | | |
| Acetone | 1800 | 9000 | 21.2 | ***189,000*** | <3.0 | 3.0J | 6.3J | <3.0 | <29.5 | 7.3J | <2,950 | <59.1 | <7.4 | <591 |
| Benzene | 0.5 | 5 | <0.50 | <500 | ***5.2*** | <0.50 | ***5.0*** | <0.50 | <5.0 | <0.50 | <500 | ***66.9*** | <1.2 | <100 |
| n-Butylbenzene | --- | --- | <0.50 | <500 | 22.9 | <0.50 | 8.5 | <0.50 | 135 | <0.50 | <500 | 24.9 | 27.3 | <100 |
| sec-Butylbenzene | --- | --- | <2.2 | <2190 | 49.4 | <2.2 | 23.0 | <2.2 | 181 | <2.2 | <2,190 | <43.7 | 32.2 | <437 |
| tert-Butylbenzene | --- | --- | <0.18 | <180 | 6.3 | <0.18 | 5.4 | <0.18 | 28.3 | 1.7 | <180 | 5.0J | 6.1 | <36.1 |
| Chlorobenzene | --- | --- | <0.50 | <500 | <0.50 | <0.50 | <0.50 | <0.50 | <5.0 | <0.50 | <500 | <10.0 | <1.2 | <100 |
| Chloroethane | 80 | 400 | <0.37 | <375 | 3.1 | <0.37 | 0.72J | <0.37 | <3.7 | <0.37 | <375 | <7.5 | <0.94 | <74.9 |
| Chloroform | 0.6 | 6 | <2.5 | <2500 | <2.5 | <2.5 | <2.5 | <2.5 | <25.0 | <2.5 | <2500 | <50.0 | <6.2 | <500 |
| Chloromethane | 3 | 30 | <0.50 | <500 | <0.50 | <0.50 | <0.50 | <0.50 | <5.0 | <0.50 | <500 | <10.0 | <1.2 | <100 |
| 1,1-Dichloroethane | 85 | 850 | <0.24 | <242 | 0.48J | 3.0 | 0.67J | <0.24 | <2.4 | <0.24 | <242 | <4.8 | <0.60 | <48.3 |
| 1,2-Dichloroethane | 0.5 | 5 | <0.17 | <168 | 0.41J | <0.17 | <0.17 | <0.17 | <1.7 | <0.17 | <168 | <3.4 | <0.42 | <33.6 |
| 1,1-Dichloroethene | 0.7 | 7 | <0.41 | <410 | <0.41 | <0.41 | <0.41 | <0.41 | <4.1 | <0.41 | <410 | <8.2 | <1.0 | <82.0 |
| cis-1,2,-Dichloroethene | 7 | 70 | <0.26 | <256 | 0.51J | <0.26 | 0.38J | <0.26 | <2.6 | <0.26 | <256 | <5.1 | <0.64 | <51.2 |
| trans-1,2-Dichloroethene | 20 | 100 | <0.26 | <257 | 1.7 | <0.26 | <0.26 | <0.26 | <2.6 | <0.26 | <257 | <5.1 | <0.64 | <51.3 |
| 1,2-Dichloropropane | 0.5 | 5 | <0.23 | <233 | <0.23 | <0.23 | <0.23 | <0.23 | <2.3 | <0.23 | <233 | <4.7 | <0.58 | <46.6 |
| Diisopropyl ether | --- | --- | 6.6 | <500 | 0.95J | <0.50 | <0.50 | <0.50 | <5.0 | <0.50 | <500 | <10.0 | <1.2 | <100 |
| Ethylbenzene | 140 | 700 | 1.8 | <500 | <0.50 | <0.50 | <0.50 | 0.55J | 5.2J | <0.50 | ***63,400*** | ***1,180*** | 2.3J | ***1,690*** |
| Isopropylbenzene | --- | --- | 2.4 | <143 | 143 | <0.14 | 64.9 | 0.31J | 1,580 | 0.71J | 2,230 | 276 | 713 | 78.2J |
| p-Isopropyltoluene | --- | --- | <0.50 | <500 | <0.50 | <0.50 | <0.50 | <0.50 | 10.0 | <0.50 | <500 | 43.8 | <1.2 | <100 |
| Methylene Chloride | 0.5 | 5 | <0.23 | <233 | <0.23 | <0.23 | <0.23 | <0.23 | <2.3 | <0.23 | <233 | <4.7 | <0.58 | <46.5 |
| Naphthalene | 10 | 100 | <2.5 | <2500 | <2.5 | <2.5 | <2.5 | <2.5 | <25.0 | <2.5 | <2500 | ***124*** | <6.2 | <500 |
| n-Propylbenzene | --- | --- | 1.0 | <500 | 184 | <0.50 | 72.6 | <0.50 | 561 | <0.50 | 1,300 | 117 | 92.4 | <100 |
| Styrene | 10 | 100 | <0.50 | <500 | <0.50 | <0.50 | <0.50 | <0.50 | <5.0 | <0.50 | <500 | <10.0 | <1.2 | <100 |
| Tetrachloroethene | 0.5 | 5 | <0.50 | <500 | <0.50 | <0.50 | <0.50 | <0.50 | <5.0 | <0.50 | <500 | <10.0 | <1.2 | <100 |
| Toluene | 160 | 800 | 2.3 | ***894J*** | <0.50 | <0.50 | 0.57J | <0.50 | <5.0 | <0.50 | *764J* | ***824*** | 1.5J | ***4,580*** |
| 1,1,1-Trichloroethane | 40 | 200 | <0.50 | <500 | 1.9 | 1.3 | <0.50 | <0.50 | <5.0 | <0.50 | <500 | <10.0 | <1.2 | <100 |
| 1,1,2-Trichloroethane | 0.5 | 5 | <0.20 | <197 | <0.20 | <0.20 | <0.20 | <0.20 | <2.0 | <0.20 | <197 | <3.9 | <0.49 | <39.5 |
| Trichloroethene | 0.5 | 5 | <0.33 | <331 | ***7.7*** | 0.44J | 1.2 | <0.33 | <3.3 | <0.33 | <331 | <6.6 | <0.83 | <66.1 |
| 1,2,4-Trimethylbenzene | --- | --- | <0.50 | <500 | 10.7 | <0.50 | 19.5 | <0.50 | <5.0 | <0.50 | 3,220 | 1,030 | 62.5 | 1,130 |
| 1,3,5-Trimethylbenzene | --- | -- | <0.50 | <500 | <0.50 | <0.50 | <0.50 | <0.50 | <5.0 | <0.50 | 1,280 | 312 | 3.2 | 506 |
| Trimethylbenzenes | 96 | 480 | <0.50 | <500 | 10.7 | <0.50 | 19.5 | <0.50 | <5.0 | <0.50 | ***4,500*** | ***1,342*** | 65.7 | ***1,636*** |
| Vinyl chloride | 0.02 | 0.2 | <0.18 | <176 | ***0.39J*** | <0.18 | <0.18 | <0.18 | <1.8 | <0.18 | <176 | <3.5 | <0.44 | <35.1 |
| m&p Xylene | --- | --- | 5.3 | 1,410J | <1.0 | <1.0 | 2.3 | 1.8J | <10.0 | <1.0 | 194,000 | 7,700 | 7.3 | 26,300 |
| o-Xylene | --- | --- | 1.2 | <500 | <0.50 | <0.50 | <0.50 | <0.50 | <5.0 | 0.65J | 76,000 | 2,150 | <1.2 | 12,700 |
| Total Xylene | 400 | 2000 | 6.5 | *1,410* | <1.0 | <1.0 | 2.3 | 1.8J | <10.0 | 0.65J | ***270,000*** | ***9,850*** | 7.3 | ***39,000*** |

**Table 2. Groundwater Analytical Results**
**Former Wayne Pigment Corp, 300 Barclay Street and 139 East Oregon S**

| PARAMETERS | Preventive Action Limit | Enforcement Standard | TW-45 | TW-47 | TW-50 | TW-51 | TW-52 | TW-54 | TW-57 | TW-59 | TW-61 | TW-83 | TW-85 | TW-86 |
|---|---|---|---|---|---|---|---|---|---|---|---|---|---|---|
| Date Collected | | | 9/19/2016 | 9/19/2016 | 9/19/2016 | 9/19/2016 | 9/19/2016 | 9/19/2016 | 9/19/2016 | 9/19/2016 | 9/19/2016 | 9/26/2016 | 9/26/2016 | 9/26/2016 |
| **RCRA Metals (ug/l)** | | | | | | | | | | | | | | |
| Arsenic, Dissolved | 1 | 10 | NA | NA | NA | NA | NA | *8.0J* | ***24.4*** | ***41.2*** | ***4,480*** | ***202,000*** | ***547*** | ***507,000*** |
| Barium, Dissolved | 400 | 2000 | NA | NA | NA | NA | NA | 178 | 236 | 65.2 | 22.1 | 391 | *662* | 173 |
| Cadmium, Dissolved | 0.5 | 5 | NA | NA | NA | NA | NA | <0.60 | <0.60 | <0.60 | ***6.8*** | ***49.0J*** | <0.60 | ***151J*** |
| Chromium, Dissolved | 10 | 100 | NA | NA | NA | NA | NA | *15.7* | *16.4* | ***6,820*** | ***148*** | NA | NA | NA |
| Chromium, Total | 10 | 100 | NA | NA | NA | NA | NA | *76* | *73* | ***8,300*** | ***1,500*** | ***950*** | ***720*** | ***15,000*** |
| Hexavalent Chromium, Total | --- | --- | NA | NA | NA | NA | NA | <2.5H | <2.5 | 6,600 | 2.9J | 4.1J, F1 | 6.1J | <5.1 |
| Trivalent Chromium, Total | --- | --- | NA | NA | NA | NA | NA | 76 | 73 | 1,700 | 1,500 | 950 | 710 | 15,000 |
| Lead, Dissolved | 1.5 | 15 | NA | NA | NA | NA | NA | ***25.9*** | ***22*** | <3.0 | <3.0 | *9.0J* | <3.0 | ***210*** |
| Selenium, Dissolved | 10 | 50 | NA | NA | NA | NA | NA | 7.2J | <6.7 | *16.5J* | 7.4J | 9.0J | <6.7 | *18.5J* |
| Silver, Dissolved | 10 | 50 | NA | NA | NA | NA | NA | <2.7 | <2.7 | <2.7 | <2.7 | <2.7 | <2.7 | <2.7 |
| Mercury, Dissolved | 0.2 | 2 | NA | NA | NA | NA | NA | <0.13 | <0.13 | <0.13 | <0.13 | <0.13 | <0.13 | *0.32J* |
| **PAHs (ug/l)** | | | | | | | | | | | | | | |
| Acenaphthene | --- | --- | NA | NA | NA | NA | NA | NA | NA | NA | NA | NA | NA | NA |
| Acenaphthylene | --- | --- | NA | NA | NA | NA | NA | NA | NA | NA | NA | NA | NA | NA |
| Anthracene | 600 | 3000 | NA | NA | NA | NA | NA | NA | NA | NA | NA | NA | NA | NA |
| Benzo(a)anthracene | --- | --- | NA | NA | NA | NA | NA | NA | NA | NA | NA | NA | NA | NA |
| Benzo(a)pyrene | 0.02 | 0.2 | NA | NA | NA | NA | NA | NA | NA | NA | NA | NA | NA | NA |
| Benzo(b)fluoranthene | 0.02 | 0.2 | NA | NA | NA | NA | NA | NA | NA | NA | NA | NA | NA | NA |
| Benzo(g,h,i)perylene | --- | --- | NA | NA | NA | NA | NA | NA | NA | NA | NA | NA | NA | NA |
| Benzo(k)fluoranthene | --- | --- | NA | NA | NA | NA | NA | NA | NA | NA | NA | NA | NA | NA |
| Chrysene | 0.02 | 0.2 | NA | NA | NA | NA | NA | NA | NA | NA | NA | NA | NA | NA |
| Dibenzo(a,h)anthracene | --- | --- | NA | NA | NA | NA | NA | NA | NA | NA | NA | NA | NA | NA |
| Fluoranthrene | 80 | 400 | NA | NA | NA | NA | NA | NA | NA | NA | NA | NA | NA | NA |
| Fluorene | 80 | 400 | NA | NA | NA | NA | NA | NA | NA | NA | NA | NA | NA | NA |
| Indeno(1,2,3-cd)pyrene | --- | --- | NA | NA | NA | NA | NA | NA | NA | NA | NA | NA | NA | NA |
| 1-Methyl Naphthalene | --- | --- | NA | NA | NA | NA | NA | NA | NA | NA | NA | NA | NA | NA |
| 2-Methyl Naphthalene | --- | --- | NA | NA | NA | NA | NA | NA | NA | NA | NA | NA | NA | NA |
| Naphthalene | 10 | 100 | NA | NA | NA | NA | NA | NA | NA | NA | NA | NA | NA | NA |
| Phenanthrene | --- | --- | NA | NA | NA | NA | NA | NA | NA | NA | NA | NA | NA | NA |
| Pyrene | 50 | 250 | NA | NA | NA | NA | NA | NA | NA | NA | NA | NA | NA | NA |

*Notes:*
Bold concentrations exceed NR 140 enforcement standards
Italicized concentrations exceed NR 140 preventive action limits
--- - not analyzed
* Total metal concentration, not field filtered
J - Results between the limit of detection and limit of quantitation
NA - not analyzed or not available
PAHs - polycyclic aromatic hydrocarbons
RCRA - resource conservation recovery act
ug/l - micrograms per liter
VOCs - volatile organic compounds

**Table 2. Groundwater Analytical Results**
**Former Wayne Pigment Corp, 300 Barclay Street and 139 East Oregon S**

| PARAMETERS | Preventive Action Limit | Enforcement Standard | MW-1 | | | | | | | |
|---|---|---|---|---|---|---|---|---|---|---|
| Date Collected | | | 10/17/2006 | 2/21/2007 | 5/22/2007 | 8/8/2007 | 12/18/2007 | 4/15/2008 | 8/27/2008 | 12/21/2015 |
| **VOCs (ug/l)** | | | | | | | | | | |
| Acetone | 1800 | 9000 | NA | NA | NA | NA | NA | NA | NA | NA |
| Benzene | 0.5 | 5 | <0.33 | <0.31 | <0.31 | <0.31 | <0.29 | <0.29 | <0.29 | <0.50 |
| n-Butylbenzene | --- | --- | <0.33 | <0.24 | <0.24 | <0.24 | <0.23 | <0.23 | <0.23 | <0.50 |
| sec-Butylbenzene | --- | --- | <0.33 | <0.28 | <0.28 | <0.28 | <0.22 | <0.22 | <0.22 | <2.2 |
| tert-Butylbenzene | --- | --- | <0.33 | <0.30 | <0.30 | <0.30 | <0.20 | <0.20 | <0.20 | <0.18 |
| Chlorobenzene | --- | --- | <0.33 | <0.31 | <0.31 | <0.31 | <0.26 | <0.26 | <0.26 | <0.50 |
| Chloroethane | 80 | 400 | <0.33 | <0.46 | <0.46 | <0.46 | <0.86 | <0.86 | <0.86 | <0.37 |
| Chloroform | 0.6 | 6 | <1.6 | <0.54 | <0.54 | <0.54 | <0.33 | <0.33 | <0.33 | <2.5 |
| Chloromethane | 3 | 30 | <0.33 | <0.65 | <0.65 | <0.65 | <0.25 | <0.25 | <0.25 | <0.50 |
| 1,1-Dichloroethane | 85 | 850 | <0.33 | 5 | 4.1 | 9.3 | 7.9 | 10 | 12 | 5.0 |
| 1,2-Dichloroethane | 0.5 | 5 | <0.33 | <0.34 | <0.34 | <0.34 | <0.27 | <0.27 | <0.27 | <0.17 |
| 1,1-Dichloroethene | 0.7 | 7 | *4.0* | 0.5 | 0.44 | 0.44 | <0.50 | <0.50 | <0.50 | <0.41 |
| cis-1,2,-Dichloroethene | 7 | 70 | <0.33 | <0.44 | <0.44 | <0.44 | <0.38 | 0.67 | 0.40 | 0.52J |
| trans-1,2-Dichloroethene | 20 | 100 | <0.33 | <0.33 | <0.33 | <0.33 | <0.30 | <0.30 | <0.30 | <0.26 |
| 1,2-Dichloropropane | 0.5 | 5 | <0.33 | <0.54 | <0.54 | <0.54 | <0.52 | <0.52 | <0.52 | <0.23 |
| Diisopropyl ether | --- | --- | NA | NA | NA | NA | NA | NA | NA | <0.50 |
| Ethylbenzene | 140 | 700 | <0.33 | <0.26 | <0.26 | <0.26 | <0.22 | <0.22 | <0.22 | <0.50 |
| Isopropylbenzene | --- | --- | <0.33 | <0.29 | <0.29 | <0.29 | <0.19 | <0.19 | <0.19 | <0.14 |
| p-Isopropyltoluene | --- | --- | <0.33 | <0.29 | <0.29 | <0.29 | <0.21 | <0.21 | <0.21 | <0.50 |
| Methylene Chloride | 0.5 | 5 | <1.6 | <0.38 | <0.38 | <0.38 | <0.30 | <0.30 | <0.30 | <0.23 |
| Naphthalene | 10 | 100 | <1.6 | <0.27 | <0.27 | <0.27 | <0.17 | <0.17 | <0.17 | <2.5 |
| n-Propylbenzene | --- | --- | <0.33 | <0.31 | <0.31 | <0.31 | <0.22 | <0.22 | <0.22 | <0.50 |
| Styrene | 10 | 100 | <0.33 | <0.27 | <0.27 | <0.27 | <0.38 | <0.38 | <0.38 | <0.50 |
| Tetrachloroethene | 0.5 | 5 | <0.33 | <0.43 | <0.43 | <0.43 | <0.29 | <0.29 | <0.29 | <0.50 |
| Toluene | 160 | 800 | <1.6 | <0.32 | <0.32 | <0.32 | <0.27 | <0.27 | <0.27 | <0.50 |
| 1,1,1-Trichloroethane | 40 | 200 | 10.0 | 3.5 | 3.9 | 3.4 | 1.8 | 22 | 2.2 | 8.2 |
| 1,1,2-Trichloroethane | 0.5 | 5 | <0.33 | <0.40 | <0.40 | <0.40 | <0.45 | <0.45 | <0.45 | <0.20 |
| Trichloroethene | 0.5 | 5 | ***6.0*** | *2.6* | *2.2* | *2.6* | *1.7* | ***12*** | *2.1* | ***15.5*** |
| 1,2,4-Trimethylbenzene | --- | --- | <0.33 | <0.25 | <0.25 | <0.25 | <0.20 | <0.20 | <0.20 | <0.50 |
| 1,3,5-Trimethylbenzene | --- | -- | <0.33 | <0.25 | <0.25 | <0.25 | <0.20 | <0.20 | <0.20 | <0.50 |
| Trimethylbenzenes | 96 | 480 | <0.33 | <0.25 | <0.25 | <0.25 | <0.20 | <0.20 | <0.20 | <0.50 |
| Vinyl chloride | 0.02 | 0.2 | <0.33 | <0.31 | <0.31 | <0.31 | <0.27 | <0.27 | <0.27 | <0.18 |
| m&p Xylene | --- | --- | NA | NA | NA | NA | NA | NA | NA | <1.0 |
| o-Xylene | --- | --- | NA | NA | NA | NA | NA | NA | NA | <0.50 |
| Total Xylene | 400 | 2000 | <0.33 | <0.52 | <0.52 | <0.52 | <0.86 | <0.86 | <0.86 | <1.0 |

**Table 2. Groundwater Analytical Results**
**Former Wayne Pigment Corp, 300 Barclay Street and 139 East Oregon S**

| PARAMETERS | Preventive Action Limit | Enforcement Standard | MW-1 | | | | | | | |
|---|---|---|---|---|---|---|---|---|---|---|
| Date Collected | | | 10/17/2006 | 2/21/2007 | 5/22/2007 | 8/8/2007 | 12/18/2007 | 4/15/2008 | 8/27/2008 | 12/21/2015 |
| **RCRA Metals (ug/l)** | | | | | | | | | | |
| Arsenic, Dissolved | 1 | 10 | <7.9 | <7.9 | NA | NA | NA | NA | NA | <7.2 |
| Barium, Dissolved | 400 | 2000 | 55 | 25 | NA | NA | NA | NA | NA | 93.3 |
| Cadmium, Dissolved | 0.5 | 5 | <0.70 | <0.70 | NA | NA | NA | NA | NA | <0.60 |
| Chromium, Dissolved | 10 | 100 | <2.3 | <2.3 | NA | NA | NA | NA | NA | 2.3J |
| Chromium, Total | 10 | 100 | NA | NA | NA | NA | NA | NA | NA | NA |
| Hexavalent Chromium, Total | --- | --- | NA | NA | NA | NA | NA | NA | NA | NA |
| Trivalent Chromium, Total | --- | --- | NA | NA | NA | NA | NA | NA | NA | NA |
| Lead, Dissolved | 1.5 | 15 | <2.4 | <0.22 | NA | NA | NA | NA | NA | <3.0 |
| Selenium, Dissolved | 10 | 50 | <9.2 | NA | NA | NA | NA | NA | NA | <6.7 |
| Silver, Dissolved | 10 | 50 | <2.5 | <2.5 | NA | NA | NA | NA | NA | <2.7 |
| Mercury, Dissolved | 0.2 | 2 | <0.044 | <0.044 | NA | NA | NA | NA | NA | <0.10 |
| **PAHs (ug/l)** | | | | | | | | | | |
| Acenaphthene | --- | --- | <0.35 | <0.35 | NA | NA | NA | NA | NA | <0.0048 |
| Acenaphthylene | --- | --- | <0.36 | <0.36 | NA | NA | NA | NA | NA | <0.0048 |
| Anthracene | 600 | 3000 | <0.29 | <0.29 | NA | NA | NA | NA | NA | <0.0039 |
| Benzo(a)anthracene | --- | --- | <0.30 | <0.30 | NA | NA | NA | NA | NA | <0.0050 |
| Benzo(a)pyrene | 0.02 | 0.2 | <0.29 | <0.29 | NA | NA | NA | NA | NA | <0.0043 |
| Benzo(b)fluoranthene | 0.02 | 0.2 | <0.36 | <0.36 | NA | NA | NA | NA | NA | <0.0052 |
| Benzo(g,h,i)perylene | --- | --- | <0.28 | <0.28 | NA | NA | NA | NA | NA | <0.0034 |
| Benzo(k)fluoranthene | --- | --- | <0.46 | <0.46 | NA | NA | NA | NA | NA | <0.0055 |
| Chrysene | 0.02 | 0.2 | <0.34 | <0.34 | NA | NA | NA | NA | NA | <0.0041 |
| Dibenzo(a,h)anthracene | --- | --- | <0.29 | <0.29 | NA | NA | NA | NA | NA | <0.0054 |
| Fluoranthrene | 80 | 400 | <0.25 | <0.25 | NA | NA | NA | NA | NA | <0.0091 |
| Fluorene | 80 | 400 | <0.30 | <0.30 | NA | NA | NA | NA | NA | <0.0039 |
| Indeno(1,2,3-cd)pyrene | --- | --- | <0.35 | <0.35 | NA | NA | NA | NA | NA | <0.0035 |
| 1-Methyl Naphthalene | --- | --- | NA | NA | NA | NA | NA | NA | NA | 0.0057J |
| 2-Methyl Naphthalene | --- | --- | NA | NA | NA | NA | NA | NA | NA | 0.0040J |
| Naphthalene | 10 | 100 | <0.25 | <0.25 | NA | NA | NA | NA | NA | 0.0092J |
| Phenanthrene | --- | --- | <0.20 | <0.20 | NA | NA | NA | NA | NA | <0.0074 |
| Pyrene | 50 | 250 | <0.29 | <0.29 | NA | NA | NA | NA | NA | <0.0075 |

*Notes:*
Bold concentrations exceed NR 140 enforcement standards
Italicized concentrations exceed NR 140 preventive action limits
--- - not analyzed
* Total metal concentration, not field filtered
J - Results between the limit of detection and limit of quantitation
NA - not analyzed or not available
PAHs - polycyclic aromatic hydrocarbons
RCRA - resource conservation recovery act
ug/l - micrograms per liter
VOCs - volatile organic compounds

**Table 2. Groundwater Analytical Results**
**Former Wayne Pigment Corp, 300 Barclay Street and 139 East Oregon S**

| PARAMETERS | Preventive Action Limit | Enforcement Standard | MW-2 | | | | | | | | |
|---|---|---|---|---|---|---|---|---|---|---|---|
| Date Collected | | | 10/17/2006 | 2/21/2007 | 5/22/2007 | 8/8/2007 | 12/18/2007 | 4/15/2008 | 8/27/2008 | 1/21/2009 | 12/21/2015 |
| **VOCs (ug/l)** | | | | | | | | | | | |
| Acetone | 1800 | 9000 | NA | NA | NA | NA | NA | NA | NA | NA | NA |
| Benzene | 0.5 | 5 | *1.8* | *2.7* | *0.59* | *1.5* | *0.5* | <0.29 | *2.3* | <0.29 | <2.5 |
| n-Butylbenzene | --- | --- | <0.33 | <0.24 | <0.24 | <0.24 | <0.23 | <0.23 | 0.26 | <0.23 | <2.5 |
| sec-Butylbenzene | --- | --- | <0.33 | <0.28 | <0.28 | <0.28 | <0.22 | <0.22 | <0.22 | <0.22 | <10.9 |
| tert-Butylbenzene | --- | --- | <0.33 | <0.30 | <0.30 | <0.30 | <0.20 | <0.20 | <0.20 | <0.20 | <0.90 |
| Chlorobenzene | --- | --- | <0.33 | <0.31 | <0.31 | <0.31 | <0.26 | <0.26 | <0.26 | <0.26 | <2.5 |
| Chloroethane | 80 | 400 | 6.9 | 7.9 | 3.6 | 6.2 | 6.5 | 1.6 | <0.86 | <0.86 | <1.9 |
| Chloroform | 0.6 | 6 | <1.6 | <0.54 | *1* | *0.81* | *0.77* | *2* | <0.33 | <0.33 | <12.5 |
| Chloromethane | 3 | 30 | <0.33 | <0.65 | <0.65 | <0.65 | <0.25 | <0.25 | <0.25 | <0.25 | <2.5 |
| 1,1-Dichloroethane | 85 | 850 | *340* | *300* | *350* | *340* | *440* | *340* | *150* | *160* | *537* |
| 1,2-Dichloroethane | 0.5 | 5 | *2.0* | *1.5* | *1.4* | *2.2* | *1.1* | *2* | *1.3* | <0.27 | *1.6J* |
| 1,1-Dichloroethene | 0.7 | 7 | ***19*** | ***36*** | ***18*** | ***15*** | ***8.6*** | ***11*** | ***14*** | *5.0* | ***9.0*** |
| cis-1,2,-Dichloroethene | 7 | 70 | ***270*** | ***410*** | ***82*** | ***200*** | ***71*** | *17* | ***140*** | *32* | *9.1* |
| trans-1,2-Dichloroethene | 20 | 100 | ***110*** | ***140*** | *25* | ***100*** | *35* | 5.4 | *49* | *24* | 5.1 |
| 1,2-Dichloropropane | 0.5 | 5 | <0.33 | <0.54 | <0.54 | <0.54 | <0.52 | <0.52 | <0.52 | <0.52 | <1.2 |
| Diisopropyl ether | --- | --- | NA | NA | NA | NA | NA | NA | NA | NA | <2.5 |
| Ethylbenzene | 140 | 700 | 0.92 | 0.84 | 0.84 | 0.38 | <0.22 | <0.22 | <0.22 | <0.22 | <2.5 |
| Isopropylbenzene | --- | --- | <0.33 | <0.29 | <0.29 | <0.29 | <0.19 | <0.19 | <0.19 | <0.19 | 1.2J |
| p-Isopropyltoluene | --- | --- | <0.33 | <0.29 | <0.29 | <0.29 | <0.21 | <0.21 | <0.21 | <0.21 | <2.5 |
| Methylene Chloride | 0.5 | 5 | <1.6 | <0.38 | <0.38 | <0.38 | <0.30 | <0.30 | 0.41 | <0.30 | <1.2 |
| Naphthalene | 10 | 100 | 1.8 | 1.2 | <0.27 | <0.27 | <0.17 | <0.17 | 1.8 | <0.17 | <12.5 |
| n-Propylbenzene | --- | --- | <0.33 | <0.31 | <0.31 | <0.31 | <0.22 | <0.22 | 0.38 | <0.22 | <2.5 |
| Styrene | 10 | 100 | <0.33 | <0.27 | <0.27 | <0.27 | <0.38 | <0.38 | <0.38 | <0.38 | <2.5 |
| Tetrachloroethene | 0.5 | 5 | <0.33 | <0.43 | <0.43 | <0.43 | <0.29 | <0.29 | <0.29 | <0.29 | <2.5 |
| Toluene | 160 | 800 | <1.6 | 2.3 | 2.3 | 0.93 | <0.27 | <0.27 | 0.44 | <0.27 | <2.5 |
| 1,1,1-Trichloroethane | 40 | 200 | *130* | *81* | ***410*** | *190* | ***320*** | ***500*** | *52* | ***520*** | ***302*** |
| 1,1,2-Trichloroethane | 0.5 | 5 | *0.7* | <0.40 | *0.6* | *0.65* | <0.45 | *1.1* | <0.45 | <0.45 | <0.99 |
| Trichloroethene | 0.5 | 5 | ***100*** | ***120*** | ***110*** | ***100*** | ***76*** | ***300*** | ***140*** | ***150*** | ***271*** |
| 1,2,4-Trimethylbenzene | --- | --- | <0.33 | <0.25 | <0.25 | <0.25 | <0.20 | <0.20 | <0.20 | <0.26 | <2.5 |
| 1,3,5-Trimethylbenzene | --- | -- | <0.33 | <0.25 | <0.25 | <0.25 | <0.22 | <0.22 | <0.22 | <0.20 | <2.5 |
| Trimethylbenzenes | 96 | 480 | <0.33 | <0.25 | <0.25 | <0.25 | <0.22 | <0.22 | <0.22 | <0.20 | <2.5 |
| Vinyl chloride | 0.02 | 0.2 | ***250*** | ***720*** | ***30*** | ***130*** | ***60*** | ***7.2*** | ***210*** | ***51*** | ***11.5*** |
| m&p Xylene | --- | --- | NA | NA | NA | NA | NA | NA | NA | NA | <5.0 |
| o-Xylene | --- | --- | NA | NA | NA | NA | NA | NA | NA | NA | <2.5 |
| Total Xylene | 400 | 2000 | 2.5 | 2.0 | <0.52 | 0.5 | <0.86 | <0.86 | <0.86 | <0.86 | <5.0 |

**Table 2. Groundwater Analytical Results**
**Former Wayne Pigment Corp, 300 Barclay Street and 139 East Oregon S**

| PARAMETERS | Preventive Action Limit | Enforcement Standard | MW-2 | | | | | | | | |
|---|---|---|---|---|---|---|---|---|---|---|---|
| Date Collected | | | 10/17/2006 | 2/21/2007 | 5/22/2007 | 8/8/2007 | 12/18/2007 | 4/15/2008 | 8/27/2008 | 1/21/2009 | 12/21/2015 |
| **RCRA Metals (ug/l)** | | | | | | | | | | | |
| Arsenic, Dissolved | 1 | 10 | <7.9 | <7.9 | NA | NA | NA | NA | NA | NA | <7.2 |
| Barium, Dissolved | 400 | 2000 | 180 | 120 | NA | NA | NA | NA | NA | NA | 68.7 |
| Cadmium, Dissolved | 0.5 | 5 | <0.70 | <0.70 | NA | NA | NA | NA | NA | NA | <0.60 |
| Chromium, Dissolved | 10 | 100 | <2.3 | <2.3 | NA | NA | NA | NA | NA | NA | <2.1 |
| Chromium, Total | 10 | 100 | NA | NA | NA | NA | NA | NA | NA | NA | NA |
| Hexavalent Chromium, Total | --- | --- | NA | NA | NA | NA | NA | NA | NA | NA | NA |
| Trivalent Chromium, Total | --- | --- | NA | NA | NA | NA | NA | NA | NA | NA | NA |
| Lead, Dissolved | 1.5 | 15 | <2.4 | <0.22 | NA | NA | NA | NA | NA | NA | *3.4J* |
| Selenium, Dissolved | 10 | 50 | <9.2 | NA | NA | NA | NA | NA | NA | NA | <6.7 |
| Silver, Dissolved | 10 | 50 | <2.5 | <2.5 | NA | NA | NA | NA | NA | NA | <2.7 |
| Mercury, Dissolved | 0.2 | 2 | <0.044 | <0.044 | NA | NA | NA | NA | NA | NA | <0.10 |
| **PAHs (ug/l)** | | | | | | | | | | | |
| Acenaphthene | --- | --- | 0.43 | 0.54 | NA | NA | NA | NA | NA | NA | 0.019J |
| Acenaphthylene | --- | --- | 3.9 | 4.2 | NA | NA | NA | NA | NA | NA | <0.0046 |
| Anthracene | 600 | 3000 | <0.29 | <0.29 | NA | NA | NA | NA | NA | NA | 0.019J |
| Benzo(a)anthracene | --- | --- | <0.30 | <0.30 | NA | NA | NA | NA | NA | NA | 0.021J |
| Benzo(a)pyrene | 0.02 | 0.2 | <0.29 | <0.29 | NA | NA | NA | NA | NA | NA | 0.011J |
| Benzo(b)fluoranthene | 0.02 | 0.2 | <0.36 | <0.36 | NA | NA | NA | NA | NA | NA | *0.020J* |
| Benzo(g,h,i)perylene | --- | --- | <0.28 | <0.28 | NA | NA | NA | NA | NA | NA | 0.0087J |
| Benzo(k)fluoranthene | --- | --- | <0.46 | <0.46 | NA | NA | NA | NA | NA | NA | 0.0090J |
| Chrysene | 0.02 | 0.2 | <0.34 | <0.34 | NA | NA | NA | NA | NA | NA | *0.020J* |
| Dibenzo(a,h)anthracene | --- | --- | <0.29 | <0.29 | NA | NA | NA | NA | NA | NA | <0.0052 |
| Fluoranthrene | 80 | 400 | 0.32 | 0.31 | NA | NA | NA | NA | NA | NA | 0.039J |
| Fluorene | 80 | 400 | 3.1 | 3.2 | NA | NA | NA | NA | NA | NA | 0.022J |
| Indeno(1,2,3-cd)pyrene | --- | --- | <0.35 | <0.35 | NA | NA | NA | NA | NA | NA | 0.0074J |
| 1-Methyl Naphthalene | --- | --- | NA | NA | NA | NA | NA | NA | NA | NA | <0.0029 |
| 2-Methyl Naphthalene | --- | --- | NA | NA | NA | NA | NA | NA | NA | NA | <0.0026 |
| Naphthalene | 10 | 100 | 1.8 | 1.2 | NA | NA | NA | NA | NA | NA | 0.0057J |
| Phenanthrene | --- | --- | 2.0 | 2.2 | NA | NA | NA | NA | NA | NA | 0.051 |
| Pyrene | 50 | 250 | <0.29 | <0.29 | NA | NA | NA | NA | NA | NA | 0.032J |

*Notes:*
Bold concentrations exceed NR 140 enforcement standards
Italicized concentrations exceed NR 140 preventive action limits
--- - not analyzed
* Total metal concentration, not field filtered
J - Results between the limit of detection and limit of quantitation
NA - not analyzed or not available
PAHs - polycyclic aromatic hydrocarbons
RCRA - resource conservation recovery act
ug/l - micrograms per liter
VOCs - volatile organic compounds

**Table 2. Groundwater Analytical Results**
**Former Wayne Pigment Corp, 300 Barclay Street and 139 East Oregon S**

| PARAMETERS | Preventive Action Limit | Enforcement Standard | MW-3 | | | | | | | | |
|---|---|---|---|---|---|---|---|---|---|---|---|
| Date Collected | | | 10/17/2006 | 2/21/2007 | 5/22/2007 | 8/8/2007 | 12/18/2007 | 4/15/2008 | 8/27/2008 | 1/21/2009 | 12/21/2015 |
| **VOCs (ug/l)** | | | | | | | | | | | |
| Acetone | 1800 | 9000 | NA | NA | NA | NA | NA | NA | NA | NA | NA |
| Benzene | 0.5 | 5 | 0.42 | *0.84* | <0.31 | <0.31 | *1.0* | <0.31 | *1.1* | *0.65* | <0.50 |
| n-Butylbenzene | --- | --- | <0.33 | <0.24 | <0.24 | <0.24 | <0.23 | <0.23 | <0.23 | <0.23 | <0.50 |
| sec-Butylbenzene | --- | --- | <0.33 | <0.28 | <0.28 | <0.28 | <0.22 | <0.22 | <0.22 | <0.22 | <2.2 |
| tert-Butylbenzene | --- | --- | <0.33 | <0.30 | <0.30 | <0.30 | <0.20 | <0.20 | <0.20 | <0.20 | <0.18 |
| Chlorobenzene | --- | --- | <0.33 | <0.31 | <0.31 | <0.31 | <0.26 | <0.26 | <0.26 | <0.26 | <0.50 |
| Chloroethane | 80 | 400 | <0.33 | 7.9 | <0.46 | <0.46 | <0.86 | <0.86 | <0.86 | <0.86 | <0.37 |
| Chloroform | 0.6 | 6 | <1.6 | <0.54 | <0.54 | <0.54 | <0.33 | <0.33 | <0.33 | <0.33 | <2.5 |
| Chloromethane | 3 | 30 | <0.33 | <0.65 | <0.65 | <0.65 | <0.25 | <0.25 | <0.25 | <0.25 | <0.50 |
| 1,1-Dichloroethane | 85 | 850 | <0.33 | 2.6 | 1.1 | 2 | 2.4 | 1.2 | 1.8 | <0.31 | <0.24 |
| 1,2-Dichloroethane | 0.5 | 5 | <0.33 | <0.34 | <0.34 | <0.34 | <0.27 | <0.27 | <0.27 | <0.31 | <0.17 |
| 1,1-Dichloroethene | 0.7 | 7 | *1.7* | <0.44 | <0.44 | <0.44 | <0.50 | <0.50 | <0.50 | <0.27 | <0.41 |
| cis-1,2,-Dichloroethene | 7 | 70 | <0.33 | 6.5 | <0.44 | 2.7 | 3.7 | <0.38 | 3.1 | 1.5 | <0.26 |
| trans-1,2-Dichloroethene | 20 | 100 | <0.33 | 0.43 | <0.33 | <0.33 | 1.1 | <0.30 | 0.59 | <0.30 | <0.26 |
| 1,2-Dichloropropane | 0.5 | 5 | *4.4* | <0.54 | <0.54 | <0.54 | <0.52 | <0.52 | <0.52 | <0.52 | <0.23 |
| Diisopropyl ether | --- | --- | NA | NA | NA | NA | NA | NA | NA | NA | <0.50 |
| Ethylbenzene | 140 | 700 | <0.33 | <0.26 | <0.26 | <0.26 | <0.22 | <0.22 | <0.22 | <0.22 | <0.50 |
| Isopropylbenzene | --- | --- | <0.33 | <0.29 | <0.29 | <0.29 | <0.19 | <0.19 | <0.19 | <0.19 | <0.14 |
| p-Isopropyltoluene | --- | --- | <0.33 | <0.29 | <0.29 | <0.29 | <0.21 | <0.21 | <0.21 | <0.21 | <0.50 |
| Methylene Chloride | 0.5 | 5 | <1.6 | <0.38 | <0.38 | <0.38 | <0.30 | <0.30 | <0.30 | <0.30 | <0.23 |
| Naphthalene | 10 | 100 | <1.6 | <0.27 | <0.27 | <0.27 | <0.17 | <0.17 | 1.5 | <0.17 | <2.5 |
| n-Propylbenzene | --- | --- | <0.33 | <0.31 | <0.31 | <0.31 | <0.22 | <0.22 | <0.22 | <0.22 | <0.50 |
| Styrene | 10 | 100 | <0.33 | <0.27 | <0.27 | <0.27 | <0.38 | <0.38 | <0.38 | <0.38 | <0.50 |
| Tetrachloroethene | 0.5 | 5 | <0.33 | <0.43 | <0.43 | <0.43 | <0.29 | <0.29 | 0.45 | <0.29 | <0.50 |
| Toluene | 160 | 800 | <1.6 | <0.32 | <0.32 | <0.32 | <0.27 | <0.27 | <0.27 | <0.27 | <0.50 |
| 1,1,1-Trichloroethane | 40 | 200 | <0.33 | <0.38 | <0.38 | 1.3 | 0.41 | 1.2 | <0.27 | <0.27 | <0.50 |
| 1,1,2-Trichloroethane | 0.5 | 5 | <0.33 | <0.40 | <0.40 | <0.40 | <0.45 | <0.45 | <0.45 | <0.45 | <0.20 |
| Trichloroethene | 0.5 | 5 | *1.2* | *2.8* | *4.0* | *4.1* | *1.5* | *3.1* | *2.2* | <0.37 | <0.33 |
| 1,2,4-Trimethylbenzene | --- | --- | <0.33 | <0.25 | <0.25 | <0.25 | <0.20 | <0.20 | 0.64 | <0.20 | <0.50 |
| 1,3,5-Trimethylbenzene | --- | -- | <0.33 | <0.25 | <0.25 | <0.25 | <0.20 | <0.20 | <0.20 | <0.20 | <0.50 |
| Trimethylbenzenes | 96 | 480 | <0.33 | <0.25 | <0.25 | <0.25 | <0.20 | <0.20 | 0.64 | <0.20 | <0.50 |
| Vinyl chloride | 0.02 | 0.2 | <0.33 | <0.31 | <0.31 | <0.31 | ***4.5*** | <0.27 | <0.27 | ***1.1*** | <0.18 |
| m&p Xylene | --- | --- | NA | NA | NA | NA | NA | NA | NA | NA | <1.0 |
| o-Xylene | --- | --- | NA | NA | NA | NA | NA | NA | NA | NA | <0.50 |
| Total Xylene | 400 | 2000 | <0.33 | <0.52 | <0.52 | <0.52 | <0.86 | <0.86 | 0.98 | <0.86 | <1.0 |

**Table 2. Groundwater Analytical Results**
**Former Wayne Pigment Corp, 300 Barclay Street and 139 East Oregon S**

| PARAMETERS | Preventive Action Limit | Enforcement Standard | MW-3 | | | | | | | | |
|---|---|---|---|---|---|---|---|---|---|---|---|
| Date Collected | | | 10/17/2006 | 2/21/2007 | 5/22/2007 | 8/8/2007 | 12/18/2007 | 4/15/2008 | 8/27/2008 | 1/21/2009 | 12/21/2015 |
| **RCRA Metals (ug/l)** | | | | | | | | | | | |
| Arsenic, Dissolved | 1 | 10 | <7.9 | <7.9 | NA | NA | NA | NA | NA | NA | ***15.8J*** |
| Barium, Dissolved | 400 | 2000 | 120 | 56 | NA | NA | NA | NA | NA | NA | 65.8 |
| Cadmium, Dissolved | 0.5 | 5 | <0.70 | <0.70 | NA | NA | NA | NA | NA | NA | <0.60 |
| Chromium, Dissolved | 10 | 100 | <2.3 | <2.3 | NA | NA | NA | NA | NA | NA | <2.1 |
| Chromium, Total | 10 | 100 | NA | NA | NA | NA | NA | NA | NA | NA | NA |
| Hexavalent Chromium, Total | --- | --- | NA | NA | NA | NA | NA | NA | NA | NA | NA |
| Trivalent Chromium, Total | --- | --- | NA | NA | NA | NA | NA | NA | NA | NA | NA |
| Lead, Dissolved | 1.5 | 15 | <2.4 | <0.22 | NA | NA | NA | NA | NA | NA | *3.5J* |
| Selenium, Dissolved | 10 | 50 | <9.2 | NA | NA | NA | NA | NA | NA | NA | <6.7 |
| Silver, Dissolved | 10 | 50 | <2.5 | <2.5 | NA | NA | NA | NA | NA | NA | <2.7 |
| Mercury, Dissolved | 0.2 | 2 | <0.044 | <0.044 | NA | NA | NA | NA | NA | NA | <0.10 |
| **PAHs (ug/l)** | | | | | | | | | | | |
| Acenaphthene | --- | --- | <0.35 | <0.35 | NA | NA | NA | NA | NA | NA | 0.0070J |
| Acenaphthylene | --- | --- | <0.36 | <0.36 | NA | NA | NA | NA | NA | NA | <0.0045 |
| Anthracene | 600 | 3000 | <0.29 | <0.29 | NA | NA | NA | NA | NA | NA | <0.0037 |
| Benzo(a)anthracene | --- | --- | <0.30 | <0.30 | NA | NA | NA | NA | NA | NA | <0.0047 |
| Benzo(a)pyrene | 0.02 | 0.2 | <0.29 | <0.29 | NA | NA | NA | NA | NA | NA | <0.0040 |
| Benzo(b)fluoranthene | 0.02 | 0.2 | <0.36 | <0.36 | NA | NA | NA | NA | NA | NA | <0.0048 |
| Benzo(g,h,i)perylene | --- | --- | <0.28 | <0.28 | NA | NA | NA | NA | NA | NA | *<0.0032* |
| Benzo(k)fluoranthene | --- | --- | <0.46 | <0.46 | NA | NA | NA | NA | NA | NA | <0.0051 |
| Chrysene | 0.02 | 0.2 | <0.34 | <0.34 | NA | NA | NA | NA | NA | NA | <0.0039 |
| Dibenzo(a,h)anthracene | --- | --- | <0.29 | <0.29 | NA | NA | NA | NA | NA | NA | <0.0051 |
| Fluoranthrene | 80 | 400 | <0.25 | <0.25 | NA | NA | NA | NA | NA | NA | <0.0085 |
| Fluorene | 80 | 400 | <0.30 | <0.30 | NA | NA | NA | NA | NA | NA | <0.0037 |
| Indeno(1,2,3-cd)pyrene | --- | --- | <0.35 | <0.35 | NA | NA | NA | NA | NA | NA | <0.0033 |
| 1-Methyl Naphthalene | --- | --- | NA | NA | NA | NA | NA | NA | NA | NA | 0.0034J |
| 2-Methyl Naphthalene | --- | --- | NA | NA | NA | NA | NA | NA | NA | NA | 0.0037J |
| Naphthalene | 10 | 100 | <0.25 | <0.25 | NA | NA | NA | NA | NA | NA | 0.0051J |
| Phenanthrene | --- | --- | <0.20 | <0.20 | NA | NA | NA | NA | NA | NA | 0.0080J |
| Pyrene | 50 | 250 | <0.29 | <0.29 | NA | NA | NA | NA | NA | NA | 0.0080J |

*Notes:*
Bold concentrations exceed NR 140 enforcement standards
Italicized concentrations exceed NR 140 preventive action limits
--- - not analyzed
* Total metal concentration, not field filtered
J - Results between the limit of detection and limit of quantitation
NA - not analyzed or not available
PAHs - polycyclic aromatic hydrocarbons
RCRA - resource conservation recovery act
ug/l - micrograms per liter
VOCs - volatile organic compounds

**Table 2. Groundwater Analytical Results**
**Former Wayne Pigment Corp, 300 Barclay Street and 139 East Oregon S**

| PARAMETERS | Preventive Action Limit | Enforcement Standard | MW-4 | | | | | | | | |
|---|---|---|---|---|---|---|---|---|---|---|---|
| Date Collected | | | 10/16/2006 | 2/21/2007 | 5/22/2007 | 8/8/2007 | 12/18/2007 | 4/15/2008 | 8/27/2008 | 1/21/2009 | 12/21/2015 |
| **VOCs (ug/l)** | | | | | | | | | | | |
| Acetone | 1800 | 9000 | NA | NA | NA | NA | NA | NA | NA | NA | NA |
| Benzene | 0.5 | 5 | ***58*** | ***59*** | ***19*** | ***40*** | ***43*** | ***56*** | ***76*** | ***50*** | ***82.4*** |
| n-Butylbenzene | --- | --- | <3.3 | 34 | <12 | <0.24 | <0.23 | <0.23 | 8.2 | <5.7 | 18.7 |
| sec-Butylbenzene | --- | --- | 0.046 | 50 | <14 | <0.28 | 4.1 | 33 | 18 | 34 | 27.9 |
| tert-Butylbenzene | --- | --- | 11 | 12 | <15 | 11 | 8.4 | 9.6 | 8 | <4.9 | 6.8 |
| Chlorobenzene | --- | --- | <3.3 | <6.1 | <15 | 0.39 | <0.26 | <0.26 | 0.32 | <6.5 | <2.5 |
| Chloroethane | 80 | 400 | <3.3 | <9.2 | <23 | <0.46 | <0.86 | <0.86 | <0.86 | <21 | <1.9 |
| Chloroform | 0.6 | 6 | <16 | <11 | <27 | <0.54 | <1.4 | <1.4 | <1.4 | <8.2 | <12.5 |
| Chloromethane | 3 | 30 | <3.3 | <13 | <32 | <0.65 | <0.33 | <0.33 | <0.33 | <6.3 | <2.5 |
| 1,1-Dichloroethane | 85 | 850 | <3.3 | <6.3 | <16 | <0.34 | <0.31 | <0.31 | <0.31 | <14 | <1.2 |
| 1,2-Dichloroethane | 0.5 | 5 | <3.3 | <6.8 | <17 | <0.34 | <0.27 | <0.27 | <0.27 | <7.8 | <0.84 |
| 1,1-Dichloroethene | 0.7 | 7 | <3.3 | <8.8 | <22 | <0.44 | <0.50 | <0.50 | <0.50 | <6.8 | <2.1 |
| cis-1,2,-Dichloroethene | 7 | 70 | <3.3 | <8.8 | <22 | 0.8 | 0.7 | 0.6 | 1.1 | <12 | <1.3 |
| trans-1,2-Dichloroethene | 20 | 100 | <3.3 | <6.5 | <16 | <0.33 | <0.30 | <0.30 | <0.30 | <9.5 | <1.3 |
| 1,2-Dichloropropane | 0.5 | 5 | <3.3 | <11 | <27 | <0.54 | <0.52 | <0.52 | <0.52 | <7.5 | <1.2 |
| Diisopropyl ether | --- | --- | NA | NA | NA | NA | NA | NA | NA | NA | <2.5 |
| Ethylbenzene | 140 | 700 | 3.6 | 30 | <13 | <0.26 | 4.1 | 41 | 36 | <6.2 | *220* |
| Isopropylbenzene | --- | --- | 440 | 560 | <14 | <0.29 | 20 | 270 | 170 | 66 | 388 |
| p-Isopropyltoluene | --- | --- | 140 | 730 | 440 | 6.1 | 240 | 290 | 96 | 27 | 16.7 |
| Methylene Chloride | 0.5 | 5 | <16 | <7.6 | <19 | <0.38 | <0.30 | <0.30 | <0.30 | <7.4 | ***6.9*** |
| Naphthalene | 10 | 100 | *19* | *15* | <13 | *22* | *12* | *24* | *18* | *17* | *53.0* |
| n-Propylbenzene | --- | --- | 22 | 200 | <15 | <0.31 | 1.4 | 110 | 52 | <5.5 | 147 |
| Styrene | 10 | 100 | <3.3 | <5.4 | <13 | <0.27 | <0.38 | <0.38 | <0.38 | <9.5 | <2.5 |
| Tetrachloroethene | 0.5 | 5 | <3.3 | <8.5 | <21 | <0.43 | <0.29 | <0.29 | 0.34 | <7.3 | <2.5 |
| Toluene | 160 | 800 | <16 | 13 | <16 | 0.97 | 0.88 | 2.8 | 3.1 | <6.8 | *245* |
| 1,1,1-Trichloroethane | 40 | 200 | <3.3 | <7.5 | <19 | <0.38 | <0.27 | <0.27 | <0.27 | <6.8 | <2.5 |
| 1,1,2-Trichloroethane | 0.5 | 5 | <3.3 | <8 | <20 | <0.40 | <0.45 | <0.45 | <0.45 | <11 | <0.99 |
| Trichloroethene | 0.5 | 5 | <3.3 | <5.3 | <13 | <0.26 | <0.37 | 0.39 | *0.78* | *<9.2* | <1.7 |
| 1,2,4-Trimethylbenzene | --- | --- | 180 | 140 | 50 | 15 | 44 | 190 | 140 | 150 | 433 |
| 1,3,5-Trimethylbenzene | --- | -- | 56 | 46 | 33 | 41 | 4 | 26 | 24 | 37 | 152 |
| Trimethylbenzenes | 96 | 480 | *236* | *186* | 83 | 56 | 48 | *216* | *164* | *187* | ***585*** |
| Vinyl chloride | 0.02 | 0.2 | <3.3 | <6.1 | <15 | <0.31 | <0.27 | <0.27 | <0.27 | <6.8 | <0.88 |
| m&p Xylene | --- | --- | NA | NA | NA | NA | NA | NA | NA | NA | 2,110 |
| o-Xylene | --- | --- | NA | NA | NA | NA | NA | NA | NA | NA | 526 |
| Total Xylene | 400 | 2000 | 180 | 216 | 123 | 70 | 32 | 210 | 270 | 280 | ***2,636*** |

**Table 2. Groundwater Analytical Results**
**Former Wayne Pigment Corp, 300 Barclay Street and 139 East Oregon S**

| PARAMETERS | Preventive Action Limit | Enforcement Standard | MW-4 | | | | | | | | |
|---|---|---|---|---|---|---|---|---|---|---|---|
| Date Collected | | | 10/16/2006 | 2/21/2007 | 5/22/2007 | 8/8/2007 | 12/18/2007 | 4/15/2008 | 8/27/2008 | 1/21/2009 | 12/21/2015 |
| **RCRA Metals (ug/l)** | | | | | | | | | | | |
| Arsenic, Dissolved | 1 | 10 | *4.3* | ***2,200*** | ***4,100*** | ***3,500*** | ***2,000*** | ***4,700*** | ***4,600**** | ***2,400*** | ***9,080*** |
| Barium, Dissolved | 400 | 2000 | 0.075 | 31 | 51 | 52 | 39 | 76 | 67 | 33 | 71.7 |
| Cadmium, Dissolved | 0.5 | 5 | <0.70 | <0.70 | <0.70 | <0.70 | <0.70 | 1 | *1.6** | *1.6* | ***47.2*** |
| Chromium, Dissolved | 10 | 100 | 0.03 | *14* | *15* | *20* | *19* | *40* | ***380**** | *17* | *27.0* |
| Chromium, Total | 10 | 100 | NA | NA | NA | NA | NA | NA | NA | NA | *41.5* |
| Hexavalent Chromium, Total | --- | --- | NA | NA | NA | NA | NA | NA | NA | NA | <97 |
| Trivalent Chromium, Total | --- | --- | NA | NA | NA | NA | NA | NA | NA | NA | <97 |
| Lead, Dissolved | 1.5 | 15 | <2.4 | <0.22 | <2.4 | <2.4 | <2.4 | <2.4 | ***16**** | *1.9* | *<3.0* |
| Selenium, Dissolved | 10 | 50 | <9.2 | NA | *21* | <9.2 | <9.2 | <9.2 | <6.5 | 6.5 | <6.7 |
| Silver, Dissolved | 10 | 50 | <2.5 | *21* | <2.5 | <2.5 | <2.5 | <2.5 | <3.2 | 3.2 | <2.7 |
| Mercury, Dissolved | 0.2 | 2 | <0.044 | <0.044 | <0.044 | <0.044 | <0.044 | <0.044 | 0.10 | <0.044 | <0.10 |
| **PAHs (ug/l)** | | | | | | | | | | | |
| Acenaphthene | --- | --- | 4.5 | 3.1 | <0.35 | 2.7 | 1.2 | 1.4 | 1.5 | 0.5 | 2.4 |
| Acenaphthylene | --- | --- | 2.8 | 3.1 | 4.4 | 3.2 | 3.5 | 3.4 | 4.1 | 1.3 | 0.056J |
| Anthracene | 600 | 3000 | 0.32 | <0.29 | <0.29 | <0.58 | <0.38 | <0.0017 | <0.0014 | <0.0014 | 0.67 |
| Benzo(a)anthracene | --- | --- | 0.68 | <0.30 | <0.30 | <0.60 | <0.39 | 0.29 | 0.11 | 0.23 | 0.083J |
| Benzo(a)pyrene | 0.02 | 0.2 | ***0.29*** | <0.29 | <0.29 | <0.58 | <0.38 | *0.10* | *0.05* | *0.11* | *0.024J* |
| Benzo(b)fluoranthene | 0.02 | 0.2 | ***0.38*** | <0.36 | <0.36 | <0.72 | <0.47 | *0.11* | *0.051* | *0.11* | *0.032J* |
| Benzo(g,h,i)perylene | --- | --- | <0.28 | <0.28 | <0.28 | <0.56 | <0.36 | <0.0013 | 0.018 | 0.053 | <0.014 |
| Benzo(k)fluoranthene | --- | --- | <0.48 | <0.46 | <0.46 | <0.92 | <0.60 | <0.0026 | 0.033 | 0.066 | <0.022 |
| Chrysene | 0.02 | 0.2 | ***0.53*** | <0.34 | <0.34 | <0.68 | <0.44 | *0.16* | *0.10* | *0.16* | *0.062J* |
| Dibenzo(a,h)anthracene | --- | --- | <0.29 | <0.29 | <0.29 | <0.58 | <0.38 | <0.0012 | <0.00096 | <0.00096 | <0.022 |
| Fluoranthrene | 80 | 400 | 3.2 | 0.92 | 1.4 | 1.4 | 1.2 | 1.4 | 1.5 | 1 | 0.81 |
| Fluorene | 80 | 400 | 2.9 | 2.5 | 3.7 | 3.2 | 2.9 | 2.9 | 3.9 | 1.1 | 1.9 |
| Indeno(1,2,3-cd)pyrene | --- | --- | <0.35 | <0.35 | <0.35 | <0.70 | <0.46 | <0.0014 | 0.015 | <0.0012 | <0.014 |
| 1-Methyl Naphthalene | --- | --- | NA | NA | NA | NA | NA | NA | NA | NA | 5.5 |
| 2-Methyl Naphthalene | --- | --- | NA | NA | NA | NA | NA | NA | NA | NA | 4.3 |
| Naphthalene | 10 | 100 | *10* | 9.2 | *14* | *13* | *12* | *15* | *18* | 5.9 | *30.4* |
| Phenanthrene | --- | --- | 8.8 | 5.1 | 7.2 | 6.5 | 6.0 | 6.0 | 7.7 | 2.6 | 3.5 |
| Pyrene | 50 | 250 | 2.4 | 0.58 | 0.96 | 0.9 | 0.81 | 0.97 | 1.1 | 0.65 | 0.80 |

*Notes:*
Bold concentrations exceed NR 140 enforcement standards
Italicized concentrations exceed NR 140 preventive action limits
--- - not analyzed
* Total metal concentration, not field filtered
J - Results between the limit of detection and limit of quantitation
NA - not analyzed or not available
PAHs - polycyclic aromatic hydrocarbons
RCRA - resource conservation recovery act
ug/l - micrograms per liter
VOCs - volatile organic compounds

**Table 2. Groundwater Analytical Results**
**Former Wayne Pigment Corp, 300 Barclay Street and 139 East Oregon S**

| PARAMETERS | Preventive Action Limit | Enforcement Standard | MW-5 | | | | | | | | |
|---|---|---|---|---|---|---|---|---|---|---|---|
| Date Collected | | | 10/16/2006 | 2/21/2007 | 5/22/2007 | 8/8/2007 | 12/18/2007 | 4/15/2008 | 8/27/2008 | 1/21/2009 | 12/21/2015 |
| **VOCs (ug/l)** | | | | | | | | | | | |
| Acetone | 1800 | 9000 | NA | NA | NA | NA | NA | NA | NA | NA | NA |
| Benzene | 0.5 | 5 | <0.33 | *3.2* | <0.31 | *1.4* | ***5.5*** | <0.29 | *0.98* | *3.5* | ***6.8*** |
| n-Butylbenzene | --- | --- | <0.33 | 3.6 | <0.24 | <0.24 | <0.23 | <0.23 | 0.28 | 13 | 2.2 |
| sec-Butylbenzene | --- | --- | <0.33 | 6.2 | <0.28 | 0.46 | 12 | <0.22 | 0.51 | 19 | 5.0J |
| tert-Butylbenzene | --- | --- | 2.4 | 30 | <0.30 | 7.8 | 7.6 | <0.20 | 4.1 | 9.7 | 3.3 |
| Chlorobenzene | --- | --- | <0.33 | <1.5 | 0.39 | 0.39 | <0.26 | <0.26 | <0.26 | <0.26 | <0.50 |
| Chloroethane | 80 | 400 | <0.33 | <2.3 | <0.46 | <0.46 | <0.86 | <0.86 | <0.86 | <0.86 | <0.37 |
| Chloroform | 0.6 | 6 | <1.6 | <2.7 | <0.54 | <0.54 | <1.4 | <1.4 | <1.4 | <1.4 | <2.5 |
| Chloromethane | 3 | 30 | <0.33 | <3.2 | <0.65 | <0.65 | <0.33 | <0.33 | <0.33 | <0.33 | <0.50 |
| 1,1-Dichloroethane | 85 | 850 | <0.33 | <1.6 | <0.34 | <0.32 | <0.31 | <0.31 | <0.31 | <0.31 | <0.24 |
| 1,2-Dichloroethane | 0.5 | 5 | <0.33 | <1.7 | <0.34 | <0.34 | <0.27 | <0.27 | <0.27 | <0.27 | <0.17 |
| 1,1-Dichloroethene | 0.7 | 7 | <0.33 | <2.2 | <0.44 | <0.44 | *0.98* | <0.50 | <0.50 | <0.50 | <0.41 |
| cis-1,2,-Dichloroethene | 7 | 70 | <0.33 | <2.2 | <0.44 | 0.45 | 0.52 | <0.38 | <0.38 | <0.38 | 0.43J |
| trans-1,2-Dichloroethene | 20 | 100 | <0.33 | <1.6 | <0.33 | <0.33 | <0.30 | <0.30 | <0.30 | <0.30 | <0.26 |
| 1,2-Dichloropropane | 0.5 | 5 | <0.33 | <2.7 | <0.54 | <0.54 | <0.52 | <0.52 | <0.52 | <0.52 | <0.23 |
| Diisopropyl ether | --- | --- | NA | NA | NA | NA | NA | NA | NA | NA | <0.50 |
| Ethylbenzene | 140 | 700 | <0.33 | <1.3 | <0.26 | <0.26 | 1.1 | <0.22 | <0.22 | <0.22 | 0.93J |
| Isopropylbenzene | --- | --- | <0.33 | 12 | <0.29 | 0.53 | 120 | <0.19 | <0.19 | 150 | 61.6 |
| p-Isopropyltoluene | --- | --- | <0.33 | 3.6 | 1.1 | 1.3 | 2.5 | 0.6 | <0.21 | 2.8 | <0.50 |
| Methylene Chloride | 0.5 | 5 | <1.6 | <1.9 | <0.38 | <0.38 | <0.30 | 0.31 | <0.30 | <0.30 | <0.23 |
| Naphthalene | 10 | 100 | <1.6 | <1.3 | <0.27 | 0.36 | <0.17 | 0.8 | 1.4 | <17 | <2.5 |
| n-Propylbenzene | --- | --- | <0.33 | 1.8 | <0.31 | <0.31 | 30 | <0.22 | <0.22 | 41 | 10.8 |
| Styrene | 10 | 100 | <0.33 | <1.3 | <0.27 | <0.27 | <0.38 | <0.38 | <0.38 | <0.38 | <0.50 |
| Tetrachloroethene | 0.5 | 5 | <0.33 | <2.1 | <0.43 | <0.43 | <0.29 | <0.29 | <0.29 | <0.29 | <0.50 |
| Toluene | 160 | 800 | <1.6 | <1.6 | <0.32 | <0.32 | 0.94 | <0.27 | <0.27 | 0.82 | 0.61J |
| 1,1,1-Trichloroethane | 40 | 200 | <0.33 | <1.9 | <0.38 | <0.38 | 0.41 | <0.27 | <0.27 | <0.27 | 0.73J |
| 1,1,2-Trichloroethane | 0.5 | 5 | <0.33 | <2 | <0.40 | <0.40 | <0.45 | <0.45 | <0.45 | <0.45 | <0.20 |
| Trichloroethene | 0.5 | 5 | <0.33 | <1.3 | <0.26 | <0.26 | 0.8 | <0.37 | <0.37 | <0.37 | *1.2* |
| 1,2,4-Trimethylbenzene | --- | --- | <0.33 | 10 | <0.25 | 9 | 47 | <0.20 | 1.4 | 19 | 0.68J |
| 1,3,5-Trimethylbenzene | --- | -- | <0.33 | <1.3 | <0.25 | 0.33 | 17 | <0.20 | <0.20 | <20 | <0.50 |
| Trimethylbenzenes | 96 | 480 | <0.33 | 10 | <0.025 | 9.33 | 58 | <0.20 | 1.4 | 19 | 0.68J |
| Vinyl chloride | 0.02 | 0.2 | <0.33 | <1.5 | <0.31 | <0.31 | <0.27 | <0.27 | <0.27 | <0.27 | <0.18 |
| m&p Xylene | --- | --- | NA | NA | NA | NA | NA | NA | NA | NA | 1.1J |
| o-Xylene | --- | --- | NA | NA | NA | NA | NA | NA | NA | NA | <0.50 |
| Total Xylene | 400 | 2000 | <0.33 | 1.4 | <0.52 | 0.9 | 2.5 | <0.86 | <0.86 | <0.86 | 1.1J |

**Table 2. Groundwater Analytical Results**
**Former Wayne Pigment Corp, 300 Barclay Street and 139 East Oregon S**

| PARAMETERS | Preventive Action Limit | Enforcement Standard | MW-5 | | | | | | | | |
|---|---|---|---|---|---|---|---|---|---|---|---|
| Date Collected | | | 10/16/2006 | 2/21/2007 | 5/22/2007 | 8/8/2007 | 12/18/2007 | 4/15/2008 | 8/27/2008 | 1/21/2009 | 12/21/2015 |
| **RCRA Metals (ug/l)** | | | | | | | | | | | |
| Arsenic, Dissolved | 1 | 10 | ***140*** | ***150*** | ***1,600*** | ***300*** | ***260*** | <7.9 | ***1,600**** | <5.4 | ***555*** |
| Barium, Dissolved | 400 | 2000 | *470* | *440* | 92 | *520* | 350 | 110 | *730** | 370 | 312 |
| Cadmium, Dissolved | 0.5 | 5 | <0.70 | <0.70 | <0.70 | <0.70 | <0.70 | *1.7* | *2.7** | <0.74 | *2.7J* |
| Chromium, Dissolved | 10 | 100 | *12* | <2.3 | *11* | <2.3 | <2.3 | 2.9 | ***210**** | <2 | *24.8* |
| Chromium, Total | 10 | 100 | NA | NA | NA | NA | NA | NA | NA | NA | ***892*** |
| Hexavalent Chromium, Total | --- | --- | NA | NA | NA | NA | NA | NA | NA | NA | <97 |
| Trivalent Chromium, Total | --- | --- | NA | NA | NA | NA | NA | NA | NA | NA | 890 |
| Lead, Dissolved | 1.5 | 15 | <2.4 | <0.22 | <2.4 | *9.3* | *9.5* | *<2.4* | ***22**** | <1.9 | *5.3J* |
| Selenium, Dissolved | 10 | 50 | <9.2 | NA | ***64*** | <9.2 | <9.2 | *11* | <6.5 | *23* | <6.7 |
| Silver, Dissolved | 10 | 50 | <2.5 | <2.5 | <2.5 | <2.5 | <2.5 | <2.5 | 3.6 | <3.2 | <2.7 |
| Mercury, Dissolved | 0.2 | 2 | <0.044 | <0.044 | <0.044 | <0.044 | <0.044 | <0.044 | *0.28* | <0.044 | <0.10 |
| **PAHs (ug/l)** | | | | | | | | | | | |
| Acenaphthene | --- | --- | 9.6 | 0.62 | NA | NA | NA | NA | NA | NA | 0.10J |
| Acenaphthylene | --- | --- | 4.1 | 0.93 | NA | NA | NA | NA | NA | NA | 0.026J |
| Anthracene | 600 | 3000 | <2.9 | <0.29 | NA | NA | NA | NA | NA | NA | 0.066J |
| Benzo(a)anthracene | --- | --- | 3.1 | 0.5 | NA | NA | NA | NA | NA | NA | 0.054J |
| Benzo(a)pyrene | 0.02 | 0.2 | <2.9 | <0.29 | NA | NA | NA | NA | NA | NA | *0.030J* |
| Benzo(b)fluoranthene | 0.02 | 0.2 | <3.6 | <0.36 | NA | NA | NA | NA | NA | NA | *0.046J* |
| Benzo(g,h,i)perylene | --- | --- | <2.8 | <0.28 | NA | NA | NA | NA | NA | NA | 0.029J |
| Benzo(k)fluoranthene | --- | --- | <4.6 | <0.46 | NA | NA | NA | NA | NA | NA | 0.020J |
| Chrysene | 0.02 | 0.2 | <3.4 | <0.34 | NA | NA | NA | NA | NA | NA | *0.045J* |
| Dibenzo(a,h)anthracene | --- | --- | <2.9 | <0.29 | NA | NA | NA | NA | NA | NA | <0.016 |
| Fluoranthrene | 80 | 400 | 7.9 | 1.3 | NA | NA | NA | NA | NA | NA | 0.13J |
| Fluorene | 80 | 400 | 4.2 | 0.83 | NA | NA | NA | NA | NA | NA | 0.086J |
| Indeno(1,2,3-cd)pyrene | --- | --- | <3.5 | <0.35 | NA | NA | NA | NA | NA | NA | 0.020J |
| 1-Methyl Naphthalene | --- | --- | NA | NA | NA | NA | NA | NA | NA | NA | 0.35 |
| 2-Methyl Naphthalene | --- | --- | NA | NA | NA | NA | NA | NA | NA | NA | 0.24 |
| Naphthalene | 10 | 100 | <2.5 | 2.2 | NA | NA | NA | NA | NA | NA | 0.37 |
| Phenanthrene | --- | --- | 9.6 | 1.8 | NA | NA | NA | NA | NA | NA | 0.095J |
| Pyrene | 50 | 250 | 6.5 | 1.0 | NA | NA | NA | NA | NA | NA | 0.13J |

*Notes:*
Bold concentrations exceed NR 140 enforcement standards
Italicized concentrations exceed NR 140 preventive action limits
--- - not analyzed
* Total metal concentration, not field filtered
J - Results between the limit of detection and limit of quantitation
NA - not analyzed or not available
PAHs - polycyclic aromatic hydrocarbons
RCRA - resource conservation recovery act
ug/l - micrograms per liter
VOCs - volatile organic compounds

**Table 2. Groundwater Analytical Results**
**Former Wayne Pigment Corp, 300 Barclay Street and 139 East Oregon S**

| PARAMETERS | Preventive Action Limit | Enforcement Standard | MW-6 | | | | | | | | |
|---|---|---|---|---|---|---|---|---|---|---|---|
| Date Collected | | | 10/16/2006 | 2/21/2007 | 5/22/2007 | 8/8/2007 | 12/18/2007 | 4/15/2008 | 8/27/2008 | 1/21/2009 | 12/21/2015 |
| **VOCs (ug/l)** | | | | | | | | | | | |
| Acetone | 1800 | 9000 | NA | NA | NA | NA | NA | NA | NA | NA | NA |
| Benzene | 0.5 | 5 | ***170*** | ***120*** | <160 | ***52*** | ***61*** | ***94*** | ***180*** | ***120*** | ***26.8J*** |
| n-Butylbenzene | --- | --- | <16 | <24 | <120 | <24 | <11 | <11 | <11 | <45 | 22.7J |
| sec-Butylbenzene | --- | --- | 19 | <28 | <140 | <28 | <11 | <11 | <11 | <44 | <87.4 |
| tert-Butylbenzene | --- | --- | <16 | <30 | <150 | <30 | <9.8 | <9.8 | <9.8 | <39 | <7.2 |
| Chlorobenzene | --- | --- | <16 | <31 | <150 | <31 | <13 | <13 | <13 | <52 | <20.0 |
| Chloroethane | 80 | 400 | <16 | <46 | <230 | <46 | <43 | <43 | <43 | <170 | <15.0 |
| Chloroform | 0.6 | 6 | <82 | <54 | <270 | <54 | <72 | <72 | <72 | <66 | <100 |
| Chloromethane | 3 | 30 | <16 | <65 | <320 | <65 | <16 | <16 | <16 | <50 | <20.0 |
| 1,1-Dichloroethane | 85 | 850 | <16 | <32 | <160 | <32 | <16 | <16 | <16 | <110 | <9.7 |
| 1,2-Dichloroethane | 0.5 | 5 | <16 | <34 | <170 | <34 | <14 | <14 | <14 | <62 | <6.7 |
| 1,1-Dichloroethene | 0.7 | 7 | <16 | <44 | <220 | <44 | <25 | <25 | <25 | <55 | <16.4 |
| cis-1,2,-Dichloroethene | 7 | 70 | <16 | <44 | <220 | <44 | <19 | <19 | <19 | <99 | <10.2 |
| trans-1,2-Dichloroethene | 20 | 100 | <16 | <33 | <160 | <33 | <15 | <15 | <15 | <76 | <10.3 |
| 1,2-Dichloropropane | 0.5 | 5 | <16 | <54 | <270 | <54 | <26 | <26 | <26 | <60 | <9.3 |
| Diisopropyl ether | --- | --- | NA | NA | NA | NA | NA | NA | NA | NA | <20.0 |
| Ethylbenzene | 140 | 700 | ***850*** | 99 | ***1,600*** | ***3,700*** | ***2,500*** | <11 | ***2,600*** | ***5,700*** | ***3,280*** |
| Isopropylbenzene | --- | --- | 68 | 100 | <140 | 130 | 72 | <9.4 | 94 | 190 | 112 |
| p-Isopropyltoluene | --- | --- | 120 | 99 | <140 | 350 | 80 | 56 | 120 | 150 | 60.1 |
| Methylene Chloride | 0.5 | 5 | <82 | <38 | <190 | <38 | <15 | ***16*** | ***32*** | <59 | ***71.8*** |
| Naphthalene | 10 | 100 | <82 | *70* | **<130** | *30* | ***210*** | *74* | ***150*** | ***150*** | <100 |
| n-Propylbenzene | --- | --- | <16 | <31 | <150 | 110 | 59 | <11 | 37 | 160 | 95.9 |
| Styrene | 10 | 100 | <16 | *28* | *<130* | <27 | <19 | <19 | <38 | <76 | <20.0 |
| Tetrachloroethene | 0.5 | 5 | <16 | <43 | <210 | <43 | <15 | <15 | <15 | <59 | <20.0 |
| Toluene | 160 | 800 | 100 | <32 | <160 | <32 | <13 | 20 | <27 | <54 | <20.0 |
| 1,1,1-Trichloroethane | 40 | 200 | <16 | <38 | <190 | <38 | <14 | <14 | <14 | <54 | <20.0 |
| 1,1,2-Trichloroethane | 0.5 | 5 | <16 | <40 | <200 | <40 | <22 | <22 | <22 | <90 | <7.9 |
| Trichloroethene | 0.5 | 5 | <16 | <26 | <130 | <26 | <18 | <18 | <18 | <74 | <13.2 |
| 1,2,4-Trimethylbenzene | --- | --- | 1,300 | 1,500 | 960 | 1,300 | 710 | 1,100 | 1,400 | 1,700 | 1,060 |
| 1,3,5-Trimethylbenzene | --- | -- | 420 | 490 | 350 | 490 | 210 | 380 | 500 | 600 | 322 |
| Trimethylbenzenes | 96 | 480 | ***1,720*** | ***1,990*** | ***1,310*** | ***1,790*** | ***920*** | ***1,480*** | ***1,900*** | ***2,300*** | ***1,382*** |
| Vinyl chloride | 0.02 | 0.2 | <16 | <31 | <150 | <31 | <14 | <14 | <27 | <55 | <7.0 |
| m&p Xylene | --- | --- | NA | NA | NA | NA | NA | NA | NA | NA | 6,600 |
| o-Xylene | --- | --- | NA | NA | NA | NA | NA | NA | NA | NA | 304 |
| Total Xylene | 400 | 2000 | ***8,500*** | **17,870** | ***12,400*** | ***13,000*** | ***7,900*** | ***22,000*** | *1,700* | ***20,000*** | ***6,904*** |

**Table 2. Groundwater Analytical Results**
**Former Wayne Pigment Corp, 300 Barclay Street and 139 East Oregon S**

| PARAMETERS | Preventive Action Limit | Enforcement Standard | MW-6 | | | | | | | | |
|---|---|---|---|---|---|---|---|---|---|---|---|
| Date Collected | | | 10/16/2006 | 2/21/2007 | 5/22/2007 | 8/8/2007 | 12/18/2007 | 4/15/2008 | 8/27/2008 | 1/21/2009 | 12/21/2015 |
| **RCRA Metals (ug/l)** | | | | | | | | | | | |
| Arsenic, Dissolved | 1 | 10 | ***610*** | ***630*** | ***890*** | ***410*** | ***660*** | ***1,800*** | ***720**** | ***180*** | ***625*** |
| Barium, Dissolved | 400 | 2000 | 36 | 30 | 27 | 36 | 63 | 23 | 65 | 32 | 28.2 |
| Cadmium, Dissolved | 0.5 | 5 | <0.70 | <0.70 | <0.70 | <0.70 | <0.70 | *1.2* | *2.5** | *1.2* | *2.8J* |
| Chromium, Dissolved | 10 | 100 | *36* | *17* | *81* | *19* | *49* | *16* | ***640**** | *18* | *57.7* |
| Chromium, Total | 10 | 100 | NA | NA | NA | NA | NA | NA | NA | NA | ***465*** |
| Hexavalent Chromium, Total | --- | --- | NA | NA | NA | NA | NA | NA | NA | NA | <97 |
| Trivalent Chromium, Total | --- | --- | NA | NA | NA | NA | NA | NA | NA | NA | 460J |
| Lead, Dissolved | 1.5 | 15 | <2.4 | <0.22 | <2.4 | <2.4 | *9.1* | <2.4 | ***19**** | *4.9* | <3.0 |
| Selenium, Dissolved | 10 | 50 | <9.2 | NA | *25* | <9.2 | <9.2 | <9.2 | <6.5 | *26* | <6.7 |
| Silver, Dissolved | 10 | 50 | <2.5 | <2.5 | <2.5 | <2.5 | <2.5 | <2.5 | <3.2 | <3.2 | <2.7 |
| Mercury, Dissolved | 0.2 | 2 | <0.044 | <0.044 | <0.044 | <0.044 | <0.044 | <0.044 | 0.08 | <0.044 | <0.10 |
| **PAHs (ug/l)** | | | | | | | | | | | |
| Acenaphthene | --- | --- | 2,300 | 1.5 | 2.4 | 1.1 | <0.42 | 6.4 | 3.9 | 1.9 | 1.4 |
| Acenaphthylene | --- | --- | 2,000 | 2.3 | 3.3 | 2.1 | 1.1 | 8.0 | 4.2 | 3.1 | 0.54J |
| Anthracene | 600 | 3000 | 170 | <0.29 | <2.9 | <0.29 | <0.35 | 0.69 | <0.0014 | 0.19 | 0.94J |
| Benzo(a)anthracene | --- | --- | 1,900 | 1.4 | 2.2 | 0.89 | <0.36 | 6.0 | 4.3 | 1.7 | 1.7 |
| Benzo(a)pyrene | 0.02 | 0.2 | ***1,300*** | ***0.68*** | ***1.2*** | ***0.48*** | <0.35 | ***3.1*** | ***2.1*** | ***0.99*** | ***1.2*** |
| Benzo(b)fluoranthene | 0.02 | 0.2 | ***1,500*** | ***1.1*** | ***1.5*** | ***0.71*** | <0.43 | ***4.1*** | ***3.0*** | ***1.2*** | ***1.9*** |
| Benzo(g,h,i)perylene | --- | --- | 620 | 0.43 | 0.52 | <0.28 | <0.34 | 1.40 | 0.91 | 0.48 | 0.85J |
| Benzo(k)fluoranthene | --- | --- | 520 | <0.46 | 0.7 | <0.46 | <0.55 | 2.0 | 0.90 | 0.49 | 0.60J |
| Chrysene | 0.02 | 0.2 | ***2,000*** | ***1.0*** | ***1.4*** | ***0.64*** | <0.41 | ***4.40*** | ***2.70*** | ***1.3*** | ***1.5*** |
| Dibenzo(a,h)anthracene | --- | --- | 300 | <0.29 | <0.29 | <0.29 | <0.35 | 0.5 | 0.3 | 0.1 | 0.17J |
| Fluoranthrene | 80 | 400 | ***6,600*** | 4.6 | 7.2 | 3.2 | 0.8 | 22 | 11 | 8 | 3.6 |
| Fluorene | 80 | 400 | ***2,800*** | 2.1 | 3.1 | 1.7 | 0.8 | 7.1 | 4.0 | 2.6 | 1.1 |
| Indeno(1,2,3-cd)pyrene | --- | --- | 640 | 0.39 | 0.58 | <0.35 | <0.42 | 1.40 | 0.87 | 0.44 | 0.51J |
| 1-Methyl Naphthalene | --- | --- | NA | NA | NA | NA | NA | NA | NA | NA | 13.8 |
| 2-Methyl Naphthalene | --- | --- | NA | NA | NA | NA | NA | NA | NA | NA | 17.2 |
| Naphthalene | 10 | 100 | ***27,000*** | ***100*** | *99* | ***110*** | *68* | ***190*** | ***170*** | ***160*** | *88.9* |
| Phenanthrene | --- | --- | 9,400 | 7.7 | 11 | 5.3 | 2.2 | 28 | 16 | 11 | 6.2 |
| Pyrene | 50 | 250 | ***5,600*** | 3.6 | 5.6 | 2.4 | 0.61 | 14 | 10 | 4.4 | 2.9 |

*Notes:*
Bold concentrations exceed NR 140 enforcement standards
Italicized concentrations exceed NR 140 preventive action limits
--- - not analyzed
* Total metal concentration, not field filtered
J - Results between the limit of detection and limit of quantitation
NA - not analyzed or not available
PAHs - polycyclic aromatic hydrocarbons
RCRA - resource conservation recovery act
ug/l - micrograms per liter
VOCs - volatile organic compounds

**Table 2. Groundwater Analytical Results**
**Former Wayne Pigment Corp, 300 Barclay Street and 139 East Oregon S**

| PARAMETERS | Preventive Action Limit | Enforcement Standard | MW-7 | | | | | | |
|---|---|---|---|---|---|---|---|---|---|
| Date Collected | | | 10/17/2006 | 2/21/2007 | 5/22/2007 | 8/8/2007 | 12/18/2007 | 4/16/2008 | 12/21/2015 |
| **VOCs (ug/l)** | | | | | | | | | |
| Acetone | 1800 | 9000 | NA | NA | NA | NA | NA | NA | NA |
| Benzene | 0.5 | 5 | <0.33 | <0.31 | <0.31 | <0.31 | <0.29 | <0.29 | <0.50 |
| n-Butylbenzene | --- | --- | <0.33 | <0.24 | <0.24 | <0.24 | <0.23 | <0.23 | <0.50 |
| sec-Butylbenzene | --- | --- | <0.33 | 1.0 | <0.28 | <0.28 | 1.3 | <0.22 | <2.2 |
| tert-Butylbenzene | --- | --- | <0.33 | 1.2 | 1.2 | 1.9 | 0.67 | 0.38 | <0.18 |
| Chlorobenzene | --- | --- | <0.33 | <0.31 | <0.31 | <0.31 | 0.65 | <0.26 | <0.50 |
| Chloroethane | 80 | 400 | <0.33 | <0.46 | <0.46 | <0.46 | <0.86 | <0.86 | <0.37 |
| Chloroform | 0.6 | 6 | <1.6 | <0.54 | <0.54 | <0.54 | <1.4 | <1.4 | <2.5 |
| Chloromethane | 3 | 30 | <0.33 | <0.65 | <0.65 | <0.65 | <0.33 | <0.33 | <0.50 |
| 1,1-Dichloroethane | 85 | 850 | <0.33 | <0.34 | <0.34 | <0.34 | <0.31 | <0.31 | <0.24 |
| 1,2-Dichloroethane | 0.5 | 5 | <0.33 | <0.34 | <0.34 | <0.34 | <0.27 | <0.27 | <0.17 |
| 1,1-Dichloroethene | 0.7 | 7 | <0.33 | <0.44 | <0.44 | <0.44 | <0.50 | <0.50 | <0.41 |
| cis-1,2,-Dichloroethene | 7 | 70 | <0.33 | <0.44 | <0.44 | <0.44 | <0.38 | <0.38 | <0.26 |
| trans-1,2-Dichloroethene | 20 | 100 | <0.33 | <0.33 | <0.33 | <0.33 | <0.30 | <0.30 | <0.26 |
| 1,2-Dichloropropane | 0.5 | 5 | <0.33 | <0.54 | <0.54 | <0.54 | <0.52 | <0.52 | <0.23 |
| Diisopropyl ether | --- | --- | NA | NA | NA | NA | NA | NA | <0.50 |
| Ethylbenzene | 140 | 700 | <0.33 | 0.65 | <0.26 | <0.26 | <0.22 | <0.22 | <0.50 |
| Isopropylbenzene | --- | --- | <0.33 | <0.29 | <0.29 | <0.29 | <0.19 | <0.19 | <0.14 |
| p-Isopropyltoluene | --- | --- | 0.52 | <0.29 | 3.6 | 3.6 | <0.21 | <0.21 | <0.50 |
| Methylene Chloride | 0.5 | 5 | <1.6 | <0.38 | <0.38 | <0.38 | <0.30 | <0.30 | <0.23 |
| Naphthalene | 10 | 100 | <1.6 | <0.27 | <0.27 | <0.27 | 4.4 | <0.17 | <2.5 |
| n-Propylbenzene | --- | --- | <0.33 | <0.31 | <0.31 | <0.31 | <0.22 | <0.22 | <0.50 |
| Styrene | 10 | 100 | <0.33 | <0.27 | <0.27 | <0.27 | <0.38 | <0.38 | <0.50 |
| Tetrachloroethene | 0.5 | 5 | <0.33 | <0.43 | <0.43 | <0.43 | <0.29 | <0.29 | <0.50 |
| Toluene | 160 | 800 | <1.6 | <0.32 | <0.32 | <0.32 | <0.27 | <0.27 | <0.50 |
| 1,1,1-Trichloroethane | 40 | 200 | <0.33 | <0.38 | <0.38 | <0.38 | <0.27 | <0.27 | <0.50 |
| 1,1,2-Trichloroethane | 0.5 | 5 | <0.33 | <0.40 | <0.40 | <0.40 | <0.45 | <0.45 | <0.20 |
| Trichloroethene | 0.5 | 5 | <0.33 | <0.26 | <0.26 | <0.26 | <0.37 | <0.37 | <0.33 |
| 1,2,4-Trimethylbenzene | --- | --- | <0.33 | <0.25 | <0.25 | <0.25 | 0.34 | 0.34 | <0.50 |
| 1,3,5-Trimethylbenzene | --- | -- | <0.33 | <0.25 | <0.25 | <0.25 | <0.20 | <0.20 | <0.50 |
| Trimethylbenzenes | 96 | 480 | <0.33 | <0.25 | <0.25 | <0.25 | 0.34 | 0.34 | <0.50 |
| Vinyl chloride | 0.02 | 0.2 | <0.33 | <0.31 | <0.31 | <0.31 | <0.27 | <0.27 | <0.18 |
| m&p Xylene | --- | --- | NA | NA | NA | NA | NA | NA | <1.0 |
| o-Xylene | --- | --- | NA | NA | NA | NA | NA | NA | <0.50 |
| Total Xylene | 400 | 2000 | <0.33 | 0.78 | <0.52 | <0.52 | <0.86 | <0.86 | <1.0 |

**Table 2. Groundwater Analytical Results**
**Former Wayne Pigment Corp, 300 Barclay Street and 139 East Oregon S**

| PARAMETERS | Preventive Action Limit | Enforcement Standard | MW-7 | | | | | | |
|---|---|---|---|---|---|---|---|---|---|
| Date Collected | | | 10/17/2006 | 2/21/2007 | 5/22/2007 | 8/8/2007 | 12/18/2007 | 4/16/2008 | 12/21/2015 |
| **RCRA Metals (ug/l)** | | | | | | | | | |
| Arsenic, Dissolved | 1 | 10 | <7.9 | <7.9 | <7.9 | <7.9 | NA | NA | <7.2 |
| Barium, Dissolved | 400 | 2000 | 190 | 94 | 190 | 94 | NA | NA | 18.9 |
| Cadmium, Dissolved | 0.5 | 5 | <0.70 | <0.70 | <0.70 | <0.70 | NA | NA | <0.60 |
| Chromium, Dissolved | 10 | 100 | <2.3 | <2.3 | <2.3 | <2.3 | NA | NA | *62.6* |
| Chromium, Total | 10 | 100 | NA | NA | NA | NA | NA | NA | ***121*** |
| Hexavalent Chromium, Total | --- | --- | NA | NA | NA | NA | NA | NA | 78 |
| Trivalent Chromium, Total | --- | --- | NA | NA | NA | NA | NA | NA | 43 |
| Lead, Dissolved | 1.5 | 15 | <2.4 | <0.22 | <2.4 | <0.22 | NA | NA | <3.0 |
| Selenium, Dissolved | 10 | 50 | <9.2 | NA | <9.2 | NA | NA | NA | <6.7 |
| Silver, Dissolved | 10 | 50 | <2.5 | <2.5 | <2.5 | <2.5 | NA | NA | <2.7 |
| Mercury, Dissolved | 0.2 | 2 | <0.044 | <0.044 | <0.044 | <0.044 | NA | NA | <0.10 |
| **PAHs (ug/l)** | | | | | | | | | |
| Acenaphthene | --- | --- | <0.35 | <0.35 | NA | NA | NA | NA | 0.013J |
| Acenaphthylene | --- | --- | <0.36 | <0.36 | NA | NA | NA | NA | 0.015J |
| Anthracene | 600 | 3000 | <0.29 | <0.29 | NA | NA | NA | NA | 0.038J |
| Benzo(a)anthracene | --- | --- | <0.30 | <0.30 | NA | NA | NA | NA | 0.17 |
| Benzo(a)pyrene | 0.02 | 0.2 | <0.29 | <0.29 | NA | NA | NA | NA | ***0.22*** |
| Benzo(b)fluoranthene | 0.02 | 0.2 | <0.36 | <0.36 | NA | NA | NA | NA | ***0.42*** |
| Benzo(g,h,i)perylene | --- | --- | <0.28 | <0.28 | NA | NA | NA | NA | 0.23 |
| Benzo(k)fluoranthene | --- | --- | <0.46 | <0.46 | NA | NA | NA | NA | 0.14 |
| Chrysene | 0.02 | 0.2 | <0.34 | <0.34 | NA | NA | NA | NA | ***0.34*** |
| Dibenzo(a,h)anthracene | --- | --- | <0.29 | <0.29 | NA | NA | NA | NA | 0.041J |
| Fluoranthrene | 80 | 400 | <0.25 | <0.25 | NA | NA | NA | NA | 0.57 |
| Fluorene | 80 | 400 | <0.30 | <0.30 | NA | NA | NA | NA | 0.017J |
| Indeno(1,2,3-cd)pyrene | --- | --- | <0.35 | <0.35 | NA | NA | NA | NA | 0.17 |
| 1-Methyl Naphthalene | --- | --- | NA | NA | NA | NA | NA | NA | 0.010J |
| 2-Methyl Naphthalene | --- | --- | NA | NA | NA | NA | NA | NA | 0.015J |
| Naphthalene | 10 | 100 | <0.25 | <0.25 | NA | NA | NA | NA | 0.026J |
| Phenanthrene | --- | --- | <0.20 | <0.20 | NA | NA | NA | NA | 0.30 |
| Pyrene | 50 | 250 | <0.29 | <0.29 | NA | NA | NA | NA | 0.43 |

*Notes:*
Bold concentrations exceed NR 140 enforcement standards
Italicized concentrations exceed NR 140 preventive action limits
--- - not analyzed
* Total metal concentration, not field filtered
J - Results between the limit of detection and limit of quantitation
NA - not analyzed or not available
PAHs - polycyclic aromatic hydrocarbons
RCRA - resource conservation recovery act
ug/l - micrograms per liter
VOCs - volatile organic compounds

**Table 2. Groundwater Analytical Results**
**Former Wayne Pigment Corp, 300 Barclay Street and 139 East Oregon S**

| PARAMETERS | Preventive Action Limit | Enforcement Standard | MW-8 | | | | | | | | |
|---|---|---|---|---|---|---|---|---|---|---|---|
| Date Collected | | | 10/16/2006 | 2/21/2007 | 5/22/2007 | 8/8/2007 | 12/18/2007 | 4/15/2008 | 8/27/2008 | 1/21/2009 | 12/21/2015 |
| **VOCs (ug/l)** | | | | | | | | | | | |
| Acetone | 1800 | 9000 | NA | NA | NA | NA | NA | NA | NA | NA | NA |
| Benzene | 0.5 | 5 | ***33*** | ***98*** | ***42*** | <16 | ***30*** | ***12*** | ***78*** | ***89*** | ***40.2*** |
| n-Butylbenzene | --- | --- | <3.3 | <12 | 26 | <44 | <11 | <0.23 | <0.23 | <44 | 22.5 |
| sec-Butylbenzene | --- | --- | <3.3 | <14 | <28 | <12 | <11 | 2.1 | <5.5 | <11 | <43.7 |
| tert-Butylbenzene | --- | --- | <3.3 | <15 | <30 | <14 | <9.8 | 2.8 | <4.9 | <11 | 6.0J |
| Chlorobenzene | --- | --- | <3.3 | <15 | <31 | <18 | <13 | <0.26 | <6.5 | <16 | <10.0 |
| Chloroethane | 80 | 400 | <3.3 | <23 | <46 | <15 | <43 | <0.86 | <21 | <21 | <7.5 |
| Chloroform | 0.6 | 6 | <16 | <27 | <54 | <23 | <72 | <0.33 | <8.2 | <43 | <50.0 |
| Chloromethane | 3 | 30 | <3.3 | <32 | <65 | <27 | <16 | <0.25 | <6.3 | <16 | <10.0 |
| 1,1-Dichloroethane | 85 | 850 | <3.3 | <16 | <32 | <20 | <16 | <0.54 | <7.8 | <16 | <4.8 |
| 1,2-Dichloroethane | 0.5 | 5 | <3.3 | <17 | <34 | <16 | <14 | <0.27 | <6.8 | <14 | <3.4 |
| 1,1-Dichloroethene | 0.7 | 7 | <3.3 | <22 | <44 | <17 | <25 | <0.50 | <12 | <25 | <8.2 |
| cis-1,2,-Dichloroethene | 7 | 70 | <3.3 | <22 | <44 | <22 | <19 | <0.38 | <9.5 | <19 | <5.1 |
| trans-1,2-Dichloroethene | 20 | 100 | <3.3 | <16 | <33 | <22 | <15 | <0.30 | <7.5 | <15 | <5.1 |
| 1,2-Dichloropropane | 0.5 | 5 | <3.3 | <27 | <54 | <16 | <26 | <0.52 | <13 | <26 | <4.7 |
| Diisopropyl ether | --- | --- | NA | NA | NA | NA | NA | NA | NA | NA | <10.0 |
| Ethylbenzene | 140 | 700 | <3.3 | *230* | <26 | <13 | 36 | <0.22 | 6.7 | *250* | *328* |
| Isopropylbenzene | --- | --- | <3.3 | 28 | <29 | <14 | <9.4 | <0.19 | <4.7 | 16 | 36.0 |
| p-Isopropyltoluene | --- | --- | 17 | 51 | 41 | 52 | 42 | <0.21 | 90 | 130 | 29.7 |
| Methylene Chloride | 0.5 | 5 | <16 | <19 | <38 | <19 | <15 | <0.30 | <7.4 | <15 | <4.7 |
| Naphthalene | 10 | 100 | *62* | ***180*** | *97* | *75* | ***210*** | *39* | ***250*** | ***330*** | ***205*** |
| n-Propylbenzene | --- | --- | 28 | <15 | 56 | <15 | <11 | <0.22 | <5.5 | <11 | 22.2 |
| Styrene | 10 | 100 | <3.3 | <13 | <27 | <13 | <19 | <0.38 | <9.5 | <19 | <10.0 |
| Tetrachloroethene | 0.5 | 5 | <3.3 | <21 | <43 | <21 | <15 | <0.29 | <7.3 | <15 | <10.0 |
| Toluene | 160 | 800 | 100 | **1,500** | *190* | <16 | 40 | 24 | *310* | *250* | 16.0J |
| 1,1,1-Trichloroethane | 40 | 200 | <3.3 | <19 | <38 | <19 | <14 | <0.26 | <6.8 | <14 | <10.0 |
| 1,1,2-Trichloroethane | 0.5 | 5 | <3.3 | <20 | <40 | <20 | <22 | <0.27 | <11 | <22 | <3.9 |
| Trichloroethene | 0.5 | 5 | <3.3 | <13 | <26 | <13 | <18 | <0.45 | <9.2 | <18 | <6.6 |
| 1,2,4-Trimethylbenzene | --- | --- | 820 | 2,400 | 1,200 | 1,400 | 1,300 | 890 | 1,600 | 2,300 | 1,720 |
| 1,3,5-Trimethylbenzene | --- | -- | 770 | 1,100 | 640 | 860 | 590 | 610 | 800 | 1,100 | 910 |
| Trimethylbenzenes | 96 | 480 | ***1,590*** | ***3,500*** | ***1,840*** | ***2,260*** | ***1,890*** | ***1,500*** | ***2,400*** | ***3,400*** | ***2,630*** |
| Vinyl chloride | 0.02 | 0.2 | <3.3 | ***1.0*** | <31 | <15 | <14 | <0.27 | <6.8 | <13 | <3.5 |
| m&p Xylene | --- | --- | NA | NA | NA | NA | NA | NA | NA | NA | 5,770 |
| o-Xylene | --- | --- | NA | NA | NA | NA | NA | NA | NA | NA | 419 |
| Total Xylene | 400 | 2000 | ***3,300*** | ***12,900*** | ***6,600*** | ***8,000*** | ***7,900*** | *1,200* | ***8,600*** | ***12,000*** | ***6,189*** |

**Table 2. Groundwater Analytical Results**
**Former Wayne Pigment Corp, 300 Barclay Street and 139 East Oregon S**

| PARAMETERS | Preventive Action Limit | Enforcement Standard | MW-8 | | | | | | | | |
|---|---|---|---|---|---|---|---|---|---|---|---|
| Date Collected | | | 10/16/2006 | 2/21/2007 | 5/22/2007 | 8/8/2007 | 12/18/2007 | 4/15/2008 | 8/27/2008 | 1/21/2009 | 12/21/2015 |
| **RCRA Metals (ug/l)** | | | | | | | | | | | |
| Arsenic, Dissolved | 1 | 10 | ***760*** | ***890*** | ***42*** | ***3,000*** | ***1,900*** | ***880*** | ***6,600**** | ***1,400*** | ***3,930*** |
| Barium, Dissolved | 400 | 2000 | 20 | 17 | 90 | 150 | 120 | 110 | 260 | 81 | 127 |
| Cadmium, Dissolved | 0.5 | 5 | <0.70 | <0.70 | <0.70 | <0.70 | <0.70 | *0.8* | *3.7** | *0.89* | ***19.9*** |
| Chromium, Dissolved | 10 | 100 | ***36,000*** | *20* | *80* | *20* | *41* | ***6,400*** | ***1,300**** | *33* | *48.0* |
| Chromium, Total | 10 | 100 | NA | NA | NA | NA | NA | NA | NA | NA | *57.1* |
| Hexavalent Chromium, Total | --- | --- | NA | NA | NA | NA | NA | NA | NA | NA | <39 |
| Trivalent Chromium, Total | --- | --- | NA | NA | NA | NA | NA | NA | NA | NA | 57J |
| Lead, Dissolved | 1.5 | 15 | <2.4 | <0.22 | <2.4 | <2.4 | <2.4 | <2.4 | ***110**** | *6* | *4.9J* |
| Selenium, Dissolved | 10 | 50 | <9.2 | NA | <9.2 | <9.2 | <9.2 | <9.2 | <6.5 | *37* | <6.7 |
| Silver, Dissolved | 10 | 50 | <2.5 | <2.5 | <2.5 | <2.5 | <2.5 | <2.5 | <3.2 | <3.2 | <2.7 |
| Mercury, Dissolved | 0.2 | 2 | <0.044 | <0.044 | <0.044 | <0.004 | <0.044 | 0.07 | *0.26* | <0.044 | <0.10 |
| **PAHs (ug/l)** | | | | | | | | | | | |
| Acenaphthene | --- | --- | 2.6 | 4.7 | 7.6 | 3.5 | 8.8 | 14 | 39 | 4.2 | 11.0 |
| Acenaphthylene | --- | --- | 3.3 | 5.9 | 12 | 6.7 | 12 | 16 | 26 | 3.9 | 0.54J |
| Anthracene | 600 | 3000 | <0.29 | 0.35 | 0.59 | 0.39 | 0.55 | 0.81 | 2.0 | 0.3 | 7.9 |
| Benzo(a)anthracene | --- | --- | 0.99 | 2.0 | 0.97 | 0.91 | 4.6 | 6.3 | 54 | 3.8 | 1.6 |
| Benzo(a)pyrene | 0.02 | 0.2 | ***0.37*** | ***0.95*** | ***0.31*** | ***0.29*** | ***2.3*** | ***2.6*** | ***27*** | ***2.2*** | ***0.63J*** |
| Benzo(b)fluoranthene | 0.02 | 0.2 | ***0.4*** | ***1.2*** | ***0.43*** | ***0.37*** | ***2.6*** | ***3.5*** | ***24*** | ***2.5*** | ***0.95J*** |
| Benzo(g,h,i)perylene | --- | --- | <0.28 | 0.4 | <0.28 | <0.28 | 1.0 | 1.1 | 11 | 1 | 0.39J |
| Benzo(k)fluoranthene | --- | --- | <0.46 | <0.46 | <0.46 | <0.46 | 1.2 | 1.4 | 15 | 1.2 | 0.55J |
| Chrysene | 0.02 | 0.2 | ***0.67*** | ***1.4*** | ***0.87*** | ***0.55*** | ***2.9*** | ***4.3*** | ***28*** | ***2.7*** | ***1.7*** |
| Dibenzo(a,h)anthracene | --- | --- | <0.29 | <0.29 | <0.29 | <0.29 | <0.35 | 0.37 | 4 | 0.36 | 0.52J |
| Fluoranthrene | 80 | 400 | 6.4 | 9.9 | 11 | 7 | 25 | 37 | *140* | 19 | 13.4 |
| Fluorene | 80 | 400 | 3.0 | 7.2 | 15 | 8.4 | 15 | 21 | 38 | 5.5 | 14.7 |
| Indeno(1,2,3-cd)pyrene | --- | --- | <0.35 | 0.43 | <0.35 | <0.35 | 0.98 | 1.1 | 11 | 1.2 | 0.49J |
| 1-Methyl Naphthalene | --- | --- | NA | NA | NA | NA | NA | NA | NA | NA | 25.5 |
| 2-Methyl Naphthalene | --- | --- | NA | NA | NA | NA | NA | NA | NA | NA | 24.4 |
| Naphthalene | 10 | 100 | *13* | ***130*** | ***160*** | ***110*** | ***130*** | *81* | ***240*** | *46* | ***169*** |
| Phenanthrene | --- | --- | 2.4 | 29 | 43 | 19 | 68 | 69 | 190 | 27 | 50.4 |
| Pyrene | 50 | 250 | 5.1 | 7.1 | 7.5 | 5.3 | 18 | 23 | *130* | 12 | 12.0 |

*Notes:*
Bold concentrations exceed NR 140 enforcement standards
Italicized concentrations exceed NR 140 preventive action limits
--- - not analyzed
* Total metal concentration, not field filtered
J - Results between the limit of detection and limit of quantitation
NA - not analyzed or not available
PAHs - polycyclic aromatic hydrocarbons
RCRA - resource conservation recovery act
ug/l - micrograms per liter
VOCs - volatile organic compounds

**Table 2. Groundwater Analytical Results**
**Former Wayne Pigment Corp, 300 Barclay Street and 139 East Oregon S**

| PARAMETERS | Preventive Action Limit | Enforcement Standard | MW-9 | | | | | | | | |
|---|---|---|---|---|---|---|---|---|---|---|---|
| Date Collected | | | 10/16/2006 | 2/21/2007 | 5/22/2007 | 8/8/2007 | 12/18/2007 | 4/15/2008 | 8/27/2008 | 1/21/2009 | 12/21/2015 |
| **VOCs (ug/l)** | | | | | | | | | | | |
| Acetone | 1800 | 9000 | NA | NA | NA | NA | NA | NA | NA | NA | NA |
| Benzene | 0.5 | 5 | <0.33 | <0.31 | <0.31 | <0.31 | NA | NA | NA | <0.29 | ***5.1*** |
| n-Butylbenzene | --- | --- | <0.33 | <0.24 | <0.24 | <0.24 | NA | NA | NA | <0.23 | <0.50 |
| sec-Butylbenzene | --- | --- | <0.33 | <0.28 | <0.28 | <0.28 | NA | NA | NA | <0.22 | <2.2 |
| tert-Butylbenzene | --- | --- | <0.33 | <0.30 | <0.30 | <0.30 | NA | NA | NA | 0.38 | 0.33J |
| Chlorobenzene | --- | --- | <0.33 | <0.31 | <0.31 | <0.31 | NA | NA | NA | <0.26 | <0.50 |
| Chloroethane | 80 | 400 | <0.33 | <0.46 | <0.46 | <0.46 | NA | NA | NA | <0.86 | <0.37 |
| Chloroform | 0.6 | 6 | <1.6 | <0.54 | <0.54 | <0.54 | NA | NA | NA | <1.4 | <2.5 |
| Chloromethane | 3 | 30 | <0.33 | <0.65 | <0.65 | <0.65 | NA | NA | NA | <0.33 | <0.50 |
| 1,1-Dichloroethane | 85 | 850 | <0.33 | <0.34 | <0.34 | <0.34 | NA | NA | NA | <0.31 | <0.24 |
| 1,2-Dichloroethane | 0.5 | 5 | <0.33 | <0.34 | <0.34 | <0.34 | NA | NA | NA | <0.27 | <0.17 |
| 1,1-Dichloroethene | 0.7 | 7 | <0.33 | <0.44 | <0.44 | <0.44 | NA | NA | NA | <0.50 | <0.41 |
| cis-1,2,-Dichloroethene | 7 | 70 | <0.33 | <0.44 | <0.44 | <0.44 | NA | NA | NA | <0.38 | 0.31J |
| trans-1,2-Dichloroethene | 20 | 100 | <0.33 | <0.33 | <0.33 | <0.33 | NA | NA | NA | <0.30 | <0.26 |
| 1,2-Dichloropropane | 0.5 | 5 | <0.33 | <0.54 | <0.54 | <0.54 | NA | NA | NA | <0.52 | <0.23 |
| Diisopropyl ether | --- | --- | NA | NA | NA | NA | NA | NA | NA | NA | <0.50 |
| Ethylbenzene | 140 | 700 | <0.33 | <0.26 | <0.26 | <0.26 | NA | NA | NA | <0.22 | <0.50 |
| Isopropylbenzene | --- | --- | <0.33 | <0.29 | <0.29 | <0.29 | NA | NA | NA | <0.19 | 0.24J |
| p-Isopropyltoluene | --- | --- | <0.33 | <0.29 | <0.29 | <0.29 | NA | NA | NA | <0.21 | <0.50 |
| Methylene Chloride | 0.5 | 5 | <1.6 | <0.38 | <0.38 | <0.38 | NA | NA | NA | <0.30 | <0.23 |
| Naphthalene | 10 | 100 | <1.6 | <0.27 | <0.27 | <0.27 | NA | NA | NA | <0.17 | <2.5 |
| n-Propylbenzene | --- | --- | <0.33 | <0.31 | <0.31 | <0.31 | NA | NA | NA | <0.22 | <0.50 |
| Styrene | 10 | 100 | <0.33 | <0.27 | <0.27 | <0.27 | NA | NA | NA | <0.38 | <0.50 |
| Tetrachloroethene | 0.5 | 5 | <0.33 | <0.43 | <0.43 | <0.43 | NA | NA | NA | <0.29 | <0.50 |
| Toluene | 160 | 800 | <1.6 | <0.32 | <0.32 | <0.32 | NA | NA | NA | <0.27 | <0.50 |
| 1,1,1-Trichloroethane | 40 | 200 | <0.33 | <0.38 | <0.38 | <0.38 | NA | NA | NA | <0.27 | <0.50 |
| 1,1,2-Trichloroethane | 0.5 | 5 | <0.33 | <0.40 | <0.40 | <0.40 | NA | NA | NA | <0.45 | <0.20 |
| Trichloroethene | 0.5 | 5 | <0.33 | <0.26 | <0.26 | <0.26 | NA | NA | NA | <0.37 | <0.33 |
| 1,2,4-Trimethylbenzene | --- | --- | 0.36 | 0.32 | 0.32 | <0.25 | NA | NA | NA | 0.34 | <0.50 |
| 1,3,5-Trimethylbenzene | --- | -- | <0.33 | <0.25 | <0.25 | <0.25 | NA | NA | NA | <0.20 | <0.50 |
| Trimethylbenzenes | 96 | 480 | 0.36 | 0.32 | 0.32 | <0.25 | NA | NA | NA | 0.34 | <0.50 |
| Vinyl chloride | 0.02 | 0.2 | <0.33 | <0.31 | <0.31 | <0.31 | NA | NA | NA | <0.27 | <0.18 |
| m&p Xylene | --- | --- | NA | NA | NA | NA | NA | NA | NA | NA | <1.0 |
| o-Xylene | --- | --- | NA | NA | NA | NA | NA | NA | NA | NA | <0.50 |
| Total Xylene | 400 | 2000 | 0.70 | <0.52 | <0.52 | <0.52 | NA | NA | NA | <0.86 | <1.0 |

**Table 2. Groundwater Analytical Results**
**Former Wayne Pigment Corp, 300 Barclay Street and 139 East Oregon S**

| PARAMETERS | Preventive Action Limit | Enforcement Standard | MW-9 | | | | | | | | |
|---|---|---|---|---|---|---|---|---|---|---|---|
| Date Collected | | | 10/16/2006 | 2/21/2007 | 5/22/2007 | 8/8/2007 | 12/18/2007 | 4/15/2008 | 8/27/2008 | 1/21/2009 | 12/21/2015 |
| **RCRA Metals (ug/l)** | | | | | | | | | | | |
| Arsenic, Dissolved | 1 | 10 | ***71*** | ***28*** | ***760*** | ***56*** | ***130*** | <7.9 | ***470**** | ***28*** | ***112*** |
| Barium, Dissolved | 400 | 2000 | 390 | 120 | 170 | 94 | 120 | 110 | 360 | 130 | 39.8 |
| Cadmium, Dissolved | 0.5 | 5 | <0.70 | <0.70 | <0.70 | <0.70 | <5 | 0.9 | ***5.5**** | *1.4* | <0.60 |
| Chromium, Dissolved | 10 | 100 | ***760*** | <2.3 | <2.3 | <2.3 | <10 | <2.3 | ***130**** | 3 | *37.8* |
| Chromium, Total | 10 | 100 | NA | NA | NA | NA | NA | NA | NA | NA | *53.3* |
| Hexavalent Chromium, Total | --- | --- | NA | NA | NA | NA | NA | NA | NA | NA | 38 |
| Trivalent Chromium, Total | --- | --- | NA | NA | NA | NA | NA | NA | NA | NA | 15J |
| Lead, Dissolved | 1.5 | 15 | <2.4 | <0.22 | <2.4 | <2.4 | <5 | <2.4 | ***190**** | *12* | *3.6J* |
| Selenium, Dissolved | 10 | 50 | <9.2 | NA | <9.2 | <9.2 | <20 | <9.2 | <6.5 | *65* | <6.7 |
| Silver, Dissolved | 10 | 50 | <2.5 | <2.5 | <2.5 | <2.5 | <10 | <2.5 | <3.2 | <3.2 | <2.7 |
| Mercury, Dissolved | 0.2 | 2 | <0.044 | <0.044 | <0.044 | <0.044 | *0.24* | <0.044 | *1.0* | <0.044 | <0.10 |
| **PAHs (ug/l)** | | | | | | | | | | | |
| Acenaphthene | --- | --- | <0.35 | <0.35 | NA | NA | NA | NA | NA | NA | <0.0048 |
| Acenaphthylene | --- | --- | <0.36 | <0.36 | NA | NA | NA | NA | NA | NA | <0.0048 |
| Anthracene | 600 | 3000 | <0.29 | <0.29 | NA | NA | NA | NA | NA | NA | 0.0058J |
| Benzo(a)anthracene | --- | --- | <0.30 | <0.30 | NA | NA | NA | NA | NA | NA | <0.0049 |
| Benzo(a)pyrene | 0.02 | 0.2 | <0.29 | <0.29 | NA | NA | NA | NA | NA | NA | <0.0042 |
| Benzo(b)fluoranthene | 0.02 | 0.2 | <0.36 | <0.36 | NA | NA | NA | NA | NA | NA | <0.0051 |
| Benzo(g,h,i)perylene | --- | --- | <0.28 | <0.28 | NA | NA | NA | NA | NA | NA | <0.0034 |
| Benzo(k)fluoranthene | --- | --- | <0.46 | <0.46 | NA | NA | NA | NA | NA | NA | <0.0054 |
| Chrysene | 0.02 | 0.2 | <0.34 | <0.34 | NA | NA | NA | NA | NA | NA | <0.0041 |
| Dibenzo(a,h)anthracene | --- | --- | <0.29 | <0.29 | NA | NA | NA | NA | NA | NA | <0.0053 |
| Fluoranthrene | 80 | 400 | <0.25 | <0.25 | NA | NA | NA | NA | NA | NA | <0.0090 |
| Fluorene | 80 | 400 | <0.30 | <0.30 | NA | NA | NA | NA | NA | NA | 0.0052J |
| Indeno(1,2,3-cd)pyrene | --- | --- | <0.35 | <0.35 | NA | NA | NA | NA | NA | NA | <0.0034 |
| 1-Methyl Naphthalene | --- | --- | NA | NA | NA | NA | NA | NA | NA | NA | <0.0030 |
| 2-Methyl Naphthalene | --- | --- | NA | NA | NA | NA | NA | NA | NA | NA | <0.0026 |
| Naphthalene | 10 | 100 | <0.25 | <0.25 | NA | NA | NA | NA | NA | NA | 0.0080J |
| Phenanthrene | --- | --- | <0.20 | <0.20 | NA | NA | NA | NA | NA | NA | <0.0074 |
| Pyrene | 50 | 250 | <0.29 | <0.29 | NA | NA | NA | NA | NA | NA | <0.0074 |

*Notes:*
Bold concentrations exceed NR 140 enforcement standards
Italicized concentrations exceed NR 140 preventive action limits
--- - not analyzed
* Total metal concentration, not field filtered
J - Results between the limit of detection and limit of quantitation
NA - not analyzed or not available
PAHs - polycyclic aromatic hydrocarbons
RCRA - resource conservation recovery act
ug/l - micrograms per liter
VOCs - volatile organic compounds

**Table 2. Groundwater Analytical Results**
**Former Wayne Pigment Corp, 300 Barclay Street and 139 East Oregon S**

| PARAMETERS | Preventive Action Limit | Enforcement Standard | MW-10 | | | | | | MW-11 | | MW-12 | |
|---|---|---|---|---|---|---|---|---|---|---|---|---|
| Date Collected | | | 10/16/2006 | 2/21/2007 | 5/22/2007 | 8/8/2007 | 8/27/2008 | 12/21/2015 | 11/9/2010 | 12/21/2015 | 11/9/2010 | 12/21/2015 |
| **VOCs (ug/l)** | | | | | | | | | | | | |
| Acetone | 1800 | 9000 | NA | NA | NA | NA | NA | NA | NA | NA | NA | NA |
| Benzene | 0.5 | 5 | <0.33 | <0.31 | <0.31 | <0.31 | *0.57* | <0.50 | *0.56* | <0.50 | <0.23 | <0.50 |
| n-Butylbenzene | --- | --- | <0.33 | <0.24 | <0.24 | <0.24 | <0.23 | <0.50 | <0.31 | <0.50 | 6.4 | <0.50 |
| sec-Butylbenzene | --- | --- | <0.33 | <0.28 | <0.28 | <0.28 | <0.22 | <2.2 | <0.22 | <2.2 | 8.8 | <2.2 |
| tert-Butylbenzene | --- | --- | <0.33 | <0.30 | <0.30 | <0.30 | <0.20 | <0.18 | <0.20 | <0.18 | 3.1 | <0.18 |
| Chlorobenzene | --- | --- | <0.33 | <0.31 | <0.31 | <0.31 | <0.26 | <0.50 | <0.30 | <0.50 | <0.30 | <0.50 |
| Chloroethane | 80 | 400 | <0.33 | <0.46 | <0.46 | <0.46 | <0.86 | <0.37 | <0.87 | <0.37 | <0.87 | <0.37 |
| Chloroform | 0.6 | 6 | <1.6 | <0.54 | <0.54 | <0.54 | <0.33 | <2.5 | <0.27 | <2.5 | <0.27 | <2.5 |
| Chloromethane | 3 | 30 | <0.33 | <0.65 | <0.65 | <0.65 | <0.25 | <0.50 | <0.76 | <0.50 | <0.76 | <0.50 |
| 1,1-Dichloroethane | 85 | 850 | <0.33 | <0.34 | <0.34 | <0.34 | <0.31 | <0.24 | <0.32 | <0.24 | <0.32 | <0.24 |
| 1,2-Dichloroethane | 0.5 | 5 | <0.33 | <0.34 | <0.34 | <0.34 | <0.27 | <0.17 | <0.25 | <0.17 | <0.25 | <0.17 |
| 1,1-Dichloroethene | 0.7 | 7 | <0.33 | <0.44 | <0.44 | <0.44 | <0.50 | <0.41 | <0.41 | <0.41 | <0.41 | <0.41 |
| cis-1,2,-Dichloroethene | 7 | 70 | <0.33 | <0.44 | <0.44 | <0.44 | <0.38 | <0.26 | <0.34 | <0.26 | <0.34 | <0.26 |
| trans-1,2-Dichloroethene | 20 | 100 | <0.33 | <0.33 | <0.33 | <0.33 | <0.30 | <0.26 | <0.26 | <0.26 | <0.26 | <0.26 |
| 1,2-Dichloropropane | 0.5 | 5 | <0.33 | <0.54 | <0.54 | <0.54 | <0.52 | <0.23 | <0.39 | <0.23 | <0.39 | <0.23 |
| Diisopropyl ether | --- | --- | NA | NA | NA | NA | NA | <0.50 | NA | <0.50 | NA | <0.50 |
| Ethylbenzene | 140 | 700 | 0.42 | 49 | 3.6 | <0.26 | 0.36 | <0.50 | 0.41 | <0.50 | ***3,300*** | <0.50 |
| Isopropylbenzene | --- | --- | <0.33 | 0.75 | 0.75 | 0.75 | 1.4 | <0.14 | <0.20 | <0.14 | 310 | <0.14 |
| p-Isopropyltoluene | --- | --- | <0.33 | <0.29 | <0.29 | <0.29 | <0.21 | <0.50 | <0.31 | <0.50 | 54 | <0.50 |
| Methylene Chloride | 0.5 | 5 | <1.6 | <0.38 | <0.38 | <0.38 | <0.30 | <0.23 | <0.91 | <0.23 | <0.91 | <0.23 |
| Naphthalene | 10 | 100 | <1.6 | 1.3 | 1.0 | <0.27 | 2.4 | <2.5 | <0.98 | <2.5 | *12* | <2.5 |
| n-Propylbenzene | --- | --- | <0.33 | <0.31 | <0.31 | <0.31 | <0.22 | <0.50 | <0.31 | <0.50 | 110 | <0.50 |
| Styrene | 10 | 100 | <0.33 | <0.27 | <0.27 | <0.27 | <0.38 | <0.50 | <0.24 | <0.50 | <0.24 | <0.50 |
| Tetrachloroethene | 0.5 | 5 | <0.33 | <0.43 | <0.43 | <0.43 | <0.29 | <0.50 | <0.32 | <0.50 | <0.32 | <0.50 |
| Toluene | 160 | 800 | <1.6 | <0.32 | <0.32 | <0.32 | 0.35 | <0.50 | <0.32 | <0.50 | 0.33 | <0.50 |
| 1,1,1-Trichloroethane | 40 | 200 | <0.33 | <0.38 | <0.38 | <0.38 | <0.27 | <0.50 | <0.31 | <0.50 | <0.31 | <0.50 |
| 1,1,2-Trichloroethane | 0.5 | 5 | <0.33 | <0.40 | <0.40 | <0.40 | <0.45 | <0.20 | <0.29 | <0.20 | <0.29 | <0.20 |
| Trichloroethene | 0.5 | 5 | <0.33 | <0.26 | <0.26 | <0.26 | <0.37 | <0.33 | <0.31 | <0.33 | <0.31 | <0.33 |
| 1,2,4-Trimethylbenzene | --- | --- | 1.3 | 0.49 | <0.25 | <0.25 | 1.2 | <0.50 | <0.18 | <0.50 | 160 | <0.50 |
| 1,3,5-Trimethylbenzene | --- | -- | 0.62 | <0.25 | <0.25 | <0.25 | <0.2 | <0.50 | <0.33 | <0.50 | 80 | <0.50 |
| Trimethylbenzenes | 96 | 480 | 1.92 | 0.49 | <0.25 | <0.25 | 1.2 | <0.50 | <0.33 | <0.50 | *240* | <0.50 |
| Vinyl chloride | 0.02 | 0.2 | <0.33 | <0.31 | <0.31 | <0.31 | <0.27 | <0.18 | <0.34 | <0.18 | <0.34 | <0.18 |
| m&p Xylene | --- | --- | NA | NA | NA | NA | NA | <1.0 | NA | <1.0 | NA | <1.0 |
| o-Xylene | --- | --- | NA | NA | NA | NA | NA | <0.50 | NA | <0.50 | NA | <0.50 |
| Total Xylene | 400 | 2000 | 270 | 9.66 | 11 | <0.52 | <0.86 | <1.0 | 3.4 | <1.0 | ***11,000*** | <1.0 |

**Table 2. Groundwater Analytical Results**
**Former Wayne Pigment Corp, 300 Barclay Street and 139 East Oregon S**

| PARAMETERS | Preventive Action Limit | Enforcement Standard | MW-10 | | | | | | MW-11 | | MW-12 | |
|---|---|---|---|---|---|---|---|---|---|---|---|---|
| Date Collected | | | 10/16/2006 | 2/21/2007 | 5/22/2007 | 8/8/2007 | 8/27/2008 | 12/21/2015 | 11/9/2010 | 12/21/2015 | 11/9/2010 | 12/21/2015 |
| **RCRA Metals (ug/l)** | | | | | | | | | | | | |
| Arsenic, Dissolved | 1 | 10 | <7.9 | <7.9 | NA | NA | NA | ***229*** | *7.4* | ***36.6*** | <6.5 | <7.2 |
| Barium, Dissolved | 400 | 2000 | 240 | 67 | NA | NA | NA | 120 | 100 | 98.6 | 280 | *439* |
| Cadmium, Dissolved | 0.5 | 5 | <0.70 | <0.70 | NA | NA | NA | *1.0J* | <0.80 | <0.60 | <0.80 | <0.60 |
| Chromium, Dissolved | 10 | 100 | *27* | <2.3 | NA | NA | NA | 2.8J | <1.7 | 3.6J | <1.7 | <2.1 |
| Chromium, Total | 10 | 100 | NA | NA | NA | NA | NA | ***854*** | NA | *65.6* | NA | 1.9J |
| Hexavalent Chromium, Total | --- | --- | NA | NA | NA | NA | NA | <97 | <2.5 | <3.9 | <2.5 | <39 |
| Trivalent Chromium, Total | --- | --- | NA | NA | NA | NA | NA | 850 | 180 | 66 | 17 | <39 |
| Lead, Dissolved | 1.5 | 15 | <2.4 | <0.22 | NA | NA | NA | <3.0 | <9.0 | <3.0 | <9.0 | *4.1J* |
| Selenium, Dissolved | 10 | 50 | *<9.2* | NA | NA | NA | NA | <6.7 | <6.3 | <6.7 | <6.3 | <6.7 |
| Silver, Dissolved | 10 | 50 | <2.5 | <2.5 | NA | NA | NA | <2.7 | <3.3 | <2.7 | <3.3 | <2.7 |
| Mercury, Dissolved | 0.2 | 2 | <0.044 | <0.044 | NA | NA | NA | <0.10 | <0.017 | <0.10 | <0.017 | <0.10 |
| **PAHs (ug/l)** | | | | | | | | | | | | |
| Acenaphthene | --- | --- | 0.61 | 0.43 | NA | NA | NA | 0.26 | 0.01 | <0.0047 | 0.28 | <0.0061 |
| Acenaphthylene | --- | --- | 3.0 | 1.7 | NA | NA | NA | 0.070 | <0.014 | <0.0047 | 0.73 | <0.0061 |
| Anthracene | 600 | 3000 | <0.29 | <0.29 | NA | NA | NA | 0.38 | <0.0095 | <0.0038 | 0.024 | 0.0053J |
| Benzo(a)anthracene | --- | --- | <0.30 | <0.30 | NA | NA | NA | 0.93 | 0.073 | <0.0048 | 0.46 | <0.0063 |
| Benzo(a)pyrene | 0.02 | 0.2 | <0.29 | <0.29 | NA | NA | NA | ***0.88*** | *0.064* | <0.0042 | ***0.44*** | 0.0076J |
| Benzo(b)fluoranthene | 0.02 | 0.2 | <0.36 | <0.36 | NA | NA | NA | ***1.1*** | *0.096* | <0.0050 | ***0.54*** | 0.0089J |
| Benzo(g,h,i)perylene | --- | --- | <0.28 | <0.28 | NA | NA | NA | 0.51 | 0.075 | <0.0033 | 0.32 | 0.011J |
| Benzo(k)fluoranthene | --- | --- | <0.46 | <0.46 | NA | NA | NA | 0.49 | <0.0046 | <0.0053 | 0.22 | <0.0070 |
| Chrysene | 0.02 | 0.2 | <0.34 | <0.34 | NA | NA | NA | ***1.1*** | *0.049* | <0.0040 | ***0.31*** | <0.0052 |
| Dibenzo(a,h)anthracene | --- | --- | <0.29 | <0.29 | NA | NA | NA | 0.11 | 0.094 | <0.0052 | 0.19 | <0.0069 |
| Fluoranthrene | 80 | 400 | 0.48 | 0.45 | NA | NA | NA | 2.3 | 0.09 | <0.0089 | 0.97 | <0.012 |
| Fluorene | 80 | 400 | 1.6 | 1.2 | NA | NA | NA | 0.23 | <0.0048 | <0.0038 | 0.44 | <0.0050 |
| Indeno(1,2,3-cd)pyrene | --- | --- | <0.35 | <0.35 | NA | NA | NA | 0.43 | 0.051 | <0.0034 | 0.28 | 0.010J |
| 1-Methyl Naphthalene | --- | --- | NA | NA | NA | NA | NA | 0.036J | NA | <0.0029 | NA | <0.0038 |
| 2-Methyl Naphthalene | --- | --- | NA | NA | NA | NA | NA | 0.024J | NA | <0.0026 | NA | <0.0034 |
| Naphthalene | 10 | 100 | <0.25 | 0.94 | NA | NA | NA | 0.056 | 0.033 | <0.0043 | 7.8 | 0.0069J |
| Phenanthrene | --- | --- | 0.43 | 2.4 | NA | NA | NA | 1.2 | 0.063 | <0.0072 | 1.2 | <0.0095 |
| Pyrene | 50 | 250 | 0.32 | 0.29 | NA | NA | NA | 1.8 | 0.065 | <0.0073 | 0.74 | <0.0095 |

*Notes:*
Bold concentrations exceed NR 140 enforcement standards
Italicized concentrations exceed NR 140 preventive action limits
--- - not analyzed
* Total metal concentration, not field filtered
J - Results between the limit of detection and limit of quantitation
NA - not analyzed or not available
PAHs - polycyclic aromatic hydrocarbons
RCRA - resource conservation recovery act
ug/l - micrograms per liter
VOCs - volatile organic compounds

**Table 2. Groundwater Analytical Results**
**Former Wayne Pigment Corp, 300 Barclay Street and 139 East Oregon S**

| PARAMETERS | Preventive Action Limit | Enforcement Standard | MW-13 | | MW-14 | MW-14R | MW-15 | | MW-16 | | MW-17 | MW-18 | MW-19 | PZ-1 | |
|---|---|---|---|---|---|---|---|---|---|---|---|---|---|---|---|
| Date Collected | | | 11/9/2010 | 12/21/2015 | 11/9/2010 | 12/21/2015 | 11/9/2010 | 12/21/2015 | 11/9/2010 | 12/21/2015 | 12/21/2015 | 12/21/2015 | 12/21/2015 | 11/3/2016 | 11/14/2016 |
| **VOCs (ug/l)** | | | | | | | | | | | | | | | |
| Acetone | 1800 | 9000 | NA | NA | NA | NA | NA | NA | NA | NA | NA | NA | NA | NA | NA |
| Benzene | 0.5 | 5 | *0.97* | *3.4* | <0.23 | <0.50 | <0.23 | <0.50 | <0.23 | <0.50 | <0.50 | <0.50 | <0.50 | <0.50 | <0.50 |
| n-Butylbenzene | --- | --- | <0.31 | <0.50 | <0.31 | <0.50 | <0.31 | <0.50 | <0.31 | <0.50 | <0.50 | <0.50 | <0.50 | <0.50 | <0.50 |
| sec-Butylbenzene | --- | --- | 0.34 | <2.2 | <0.22 | <2.2 | <0.22 | <2.2 | <0.22 | <2.2 | <2.2 | <2.2 | <2.2 | <2.2 | <2.2 |
| tert-Butylbenzene | --- | --- | 0.56 | 0.23J | <0.20 | <0.18 | <0.20 | <0.18 | <0.20 | <0.18 | <0.18 | <0.18 | <0.18 | <0.18 | <0.18 |
| Chlorobenzene | --- | --- | <0.30 | <0.50 | <0.30 | <0.50 | <0.30 | <0.50 | <0.30 | <0.50 | <0.50 | <0.50 | <0.50 | <0.50 | <0.50 |
| Chloroethane | 80 | 400 | <0.87 | <0.37 | <0.87 | <0.37 | <0.87 | <0.37 | <0.87 | <0.37 | <0.37 | <0.37 | <0.37 | <0.37 | <0.37 |
| Chloroform | 0.6 | 6 | <0.27 | <2.5 | <0.27 | <2.5 | <0.27 | <2.5 | <0.27 | <2.5 | <2.5 | <2.5 | <2.5 | <2.5 | <2.5 |
| Chloromethane | 3 | 30 | <0.76 | <0.50 | <0.76 | <0.50 | <0.76 | <0.50 | <0.76 | <0.50 | <0.50 | <0.50 | <0.50 | <0.50 | 1.6 |
| 1,1-Dichloroethane | 85 | 850 | <0.32 | <0.24 | <0.32 | <0.24 | <0.32 | <0.24 | <0.32 | <0.24 | 1.5 | <0.24 | <0.24 | 0.60J | <0.24 |
| 1,2-Dichloroethane | 0.5 | 5 | <0.25 | <0.17 | <0.25 | <0.17 | <0.25 | <0.17 | <0.25 | <0.17 | <0.17 | <0.17 | <0.17 | <0.17 | <0.17 |
| 1,1-Dichloroethene | 0.7 | 7 | <0.41 | <0.41 | <0.41 | <0.41 | <0.41 | <0.41 | <0.41 | <0.41 | <0.41 | <0.41 | <0.41 | <0.41 | <0.41 |
| cis-1,2,-Dichloroethene | 7 | 70 | <0.34 | <0.26 | <0.34 | <0.26 | <0.34 | <0.26 | <0.34 | <0.26 | <0.26 | <0.26 | 0.62J | 2.8 | 1.1 |
| trans-1,2-Dichloroethene | 20 | 100 | <0.26 | <0.26 | <0.26 | <0.26 | <0.26 | <0.26 | <0.26 | <0.26 | <0.26 | <0.26 | <0.26 | <0.26 | <0.26 |
| 1,2-Dichloropropane | 0.5 | 5 | <0.39 | <0.23 | <0.39 | <0.23 | <0.39 | <0.23 | <0.39 | <0.23 | <0.23 | <0.23 | <0.23 | <0.23 | <0.23 |
| Diisopropyl ether | --- | --- | NA | <0.50 | NA | <0.50 | NA | <0.50 | NA | <0.50 | <0.50 | <0.50 | <0.50 | <0.50 | <0.50 |
| Ethylbenzene | 140 | 700 | ***1,100*** | <0.50 | 1.1 | <0.50 | <0.22 | <0.50 | <0.22 | <0.50 | <0.50 | <0.50 | <0.50 | <0.50 | <0.50 |
| Isopropylbenzene | --- | --- | 40 | <0.14 | 0.68 | <0.14 | <0.20 | <0.14 | <0.20 | <0.14 | <0.14 | <0.14 | <0.14 | <0.14 | <0.14 |
| p-Isopropyltoluene | --- | --- | 0.81 | <0.50 | 3.7 | 0.53J | <0.31 | <0.50 | <0.31 | <0.50 | <0.50 | <0.50 | <0.50 | <0.50 | <0.50 |
| Methylene Chloride | 0.5 | 5 | <0.91 | <0.23 | <0.91 | <0.23 | <0.91 | <0.23 | <0.91 | <0.23 | <0.23 | <0.23 | <0.23 | <0.23 | <0.23 |
| Naphthalene | 10 | 100 | 1.3 | <2.5 | <0.98 | <2.5 | <0.98 | <2.5 | <0.98 | <2.5 | <2.5 | <2.5 | <2.5 | <2.5 | <2.5 |
| n-Propylbenzene | --- | --- | 1.5 | <0.50 | <0.31 | <0.50 | <0.31 | <0.50 | <0.31 | <0.50 | <0.50 | <0.50 | <0.50 | <0.50 | <0.50 |
| Styrene | 10 | 100 | <0.24 | <0.50 | <0.24 | <0.50 | <0.24 | <0.50 | <0.24 | <0.50 | <0.50 | <0.50 | <0.50 | <0.50 | <0.50 |
| Tetrachloroethene | 0.5 | 5 | <0.32 | <0.50 | <0.32 | <0.50 | <0.32 | <0.50 | <0.32 | <0.50 | <0.50 | <0.50 | <0.50 | <0.50 | <0.50 |
| Toluene | 160 | 800 | 3.7 | <0.50 | <0.32 | <0.50 | <0.32 | <0.50 | <0.32 | <0.50 | <0.50 | <0.50 | <0.50 | <0.50 | <0.50 |
| 1,1,1-Trichloroethane | 40 | 200 | <0.31 | <0.50 | <0.31 | <0.50 | <0.31 | <0.50 | <0.31 | <0.50 | 7.6 | <0.50 | 0.61J | <0.50 | <0.50 |
| 1,1,2-Trichloroethane | 0.5 | 5 | <0.29 | <0.20 | <0.29 | <0.20 | <0.29 | <0.20 | <0.29 | <0.20 | <0.20 | <0.20 | <0.20 | <0.20 | <0.20 |
| Trichloroethene | 0.5 | 5 | <0.31 | <0.33 | <0.31 | <0.33 | <0.31 | <0.33 | <0.31 | *<0.33* | *3.7* | 3.0 | ***54.0*** | ***31.4*** | ***5.4*** |
| 1,2,4-Trimethylbenzene | --- | --- | 56 | <0.50 | 0.52 | <0.50 | <0.18 | <0.50 | <0.18 | <0.50 | <0.50 | <0.50 | <0.50 | <0.50 | <0.50 |
| 1,3,5-Trimethylbenzene | --- | -- | 4.3 | <0.50 | <0.33 | <0.50 | <0.33 | <0.50 | <0.33 | <0.50 | <0.50 | <0.50 | <0.50 | <0.50 | <0.50 |
| Trimethylbenzenes | 96 | 480 | 60.3 | <0.50 | 0.52 | <0.50 | <0.33 | <0.50 | <0.33 | <0.50 | <0.50 | <0.50 | <0.50 | <0.50 | <0.50 |
| Vinyl chloride | 0.02 | 0.2 | <0.34 | <0.18 | <0.34 | <0.18 | <0.34 | <0.18 | <0.34 | <0.18 | <0.18 | <0.18 | <0.18 | ***0.33J*** | ***0.51J*** |
| m&p Xylene | --- | --- | NA | <1.0 | NA | <1.0 | NA | <1.0 | NA | <1.0 | <1.0 | <1.0 | <1.0 | <1.0 | <1.0 |
| o-Xylene | --- | --- | NA | <0.50 | NA | <0.50 | NA | <0.50 | NA | <0.50 | <0.50 | <0.50 | <0.50 | <0.50 | <0.50 |
| Total Xylene | 400 | 2000 | *4,600* | <1.0 | 5.1 | <1.0 | <0.86 | <1.0 | <0.86 | <1.0 | <1.0 | <1.0 | <1.0 | <1.0 | <1.0 |

**Table 2. Groundwater Analytical Results**
**Former Wayne Pigment Corp, 300 Barclay Street and 139 East Oregon S**

| PARAMETERS | Preventive Action Limit | Enforcement Standard | MW-13 | | MW-14 | MW-14R | MW-15 | | MW-16 | | MW-17 | MW-18 | MW-19 | PZ-1 | |
|---|---|---|---|---|---|---|---|---|---|---|---|---|---|---|---|
| Date Collected | | | 11/9/2010 | 12/21/2015 | 11/9/2010 | 12/21/2015 | 11/9/2010 | 12/21/2015 | 11/9/2010 | 12/21/2015 | 12/21/2015 | 12/21/2015 | 12/21/2015 | 11/3/2016 | 11/14/2016 |
| **RCRA Metals (ug/l)** | | | | | | | | | | | | | | | |
| Arsenic, Dissolved | 1 | 10 | **110** | ***115*** | ***1,100*** | ***101*** | <6.5 | <7.2 | *7* | <7.2 | <7.2 | *8.4J* | <7.2 | <5.4 | NA |
| Barium, Dissolved | 400 | 2000 | 30 | 39.3 | 17 | 23.8 | 110 | 29.6 | *460* | 85.1 | 100 | 45.4 | 226 | 282 | NA |
| Cadmium, Dissolved | 0.5 | 5 | <0.80 | *0.71J* | <0.80 | <1.0 | <0.80 | <0.60 | <0.80 | <0.60 | <0.60 | <0.60 | *0.88J* | <1.3 | NA |
| Chromium, Dissolved | 10 | 100 | 5 | *40.2* | ***4,300*** | ***5,670*** | 3 | ***1,220*** | <1.7 | <2.1 | <2.1 | <2.1 | <2.1 | <2.5 | NA |
| Chromium, Total | 10 | 100 | NA | ***310*** | NA | ***4,270*** | NA | ***1,260*** | NA | 1.7J | NA | NA | NA | *29.5* | NA |
| Hexavalent Chromium, Total | --- | --- | <2.5 | <3.9 | 3,600 | <390 | <0.25 | 790 | 44 | <3.9 | NA | NA | NA | <0.051 | NA |
| Trivalent Chromium, Total | --- | --- | 38 | 310 | 9,500 | 4300 | 57 | 470 | <2.5 | <3.9 | NA | NA | NA | <0.051 | NA |
| Lead, Dissolved | 1.5 | 15 | <9.0 | *4.5J* | <1.8 | *6.3J* | <9.0 | *4.0J* | <18 | *3.8J* | <3.0 | <3.0 | <3.0 | <4.3 | NA |
| Selenium, Dissolved | 10 | 50 | <6.3 | <6.7 | <6.3 | 9.1J | <6.3 | <6.7 | *10* | <6.7 | *15.7J* | 8.6J | <6.7 | <5.6 | NA |
| Silver, Dissolved | 10 | 50 | <3.3 | <2.7 | <3.3 | <3.2 | <3.3 | <2.7 | <3.3 | <2.7 | <2.7 | <2.7 | <2.7 | <3.2 | NA |
| Mercury, Dissolved | 0.2 | 2 | <0.017 | <0.10 | 0.04 | 0.12J | <0.017 | <0.10 | <0.017 | <0.10 | <0.10 | <0.10 | <0.10 | <0.13 | NA |
| **PAHs (ug/l)** | | | | | | | | | | | | | | | |
| Acenaphthene | --- | --- | 0.061 | <0.0046 | <0.0051 | 0.011J | 0.01 | <0.0047 | 0.012 | 0.040J | <0.0046 | <0.0048 | 0.0076J | 0.030J | <0.0058 |
| Acenaphthylene | --- | --- | 0.12 | <0.0046 | 0.016 | <0.0048 | <0.014 | <0.0047 | 0.014 | <0.0057 | <0.0045 | <0.0048 | <0.0045 | 0.0078J | <0.0048 |
| Anthracene | 600 | 3000 | 0.012 | 0.0071J | 0.015 | 0.014J | <0.0095 | 0.0071J | <0.0095 | 0.029J | <0.0037 | 0.0043J | <0.0036 | 0.088 | <0.010 |
| Benzo(a)anthracene | --- | --- | 0.15 | <0.0048 | 0.056 | 0.0086J | 0.03 | <0.0048 | 0.038 | 0.017J | <0.0047 | <0.0049 | <0.0046 | 0.088 | <0.0073 |
| Benzo(a)pyrene | 0.02 | 0.2 | *0.091* | <0.0041 | *0.028* | 0.0052J | <0.0029 | <0.0042 | 0.013 | 0.0055J | <0.0041 | <0.0042 | <0.0040 | *0.059J* | <0.010 |
| Benzo(b)fluoranthene | 0.02 | 0.2 | *0.11* | <0.0050 | *0.038* | 0.013J | <0.0067 | 0.0050J | *0.025* | 0.0080J | 0.0058J | <0.0051 | <0.0048 | *0.071* | <0.0055 |
| Benzo(g,h,i)perylene | --- | --- | 0.063 | <0.0033 | 0.03 | 0.013J | <0.0052 | <0.0033 | 0.01 | <0.0040 | <0.0032 | <0.0034 | <0.0032 | 0.058 | <0.0065 |
| Benzo(k)fluoranthene | --- | --- | 0.053 | <0.0053 | <0.0046 | <0.0055 | <0.0046 | <0.0053 | <0.0046 | <0.0065 | <0.0052 | <0.0054 | <0.0051 | 0.022J | <0.0073 |
| Chrysene | 0.02 | 0.2 | *0.099* | <0.0040 | *0.026* | 0.013J | <0.016 | 0.0045J | <0.016 | 0.0098J | <0.0039 | <0.0041 | <0.0038 | *0.088* | <0.013 |
| Dibenzo(a,h)anthracene | --- | --- | 0.096 | <0.0052 | 0.09 | <0.0055 | 0.091 | <0.0052 | 0.086 | <0.0064 | <0.0051 | <0.0053 | <0.0050 | <0.012 | <0.0096 |
| Fluoranthrene | 80 | 400 | 0.34 | <0.0088 | 0.075 | 0.048J | 0.03 | <0.0089 | 0.035 | 0.062 | <0.0086 | <0.0090 | <0.0085 | 0.21 | 0.015J |
| Fluorene | 80 | 400 | 0.054 | <0.0038 | 0.018 | 0.015J | <0.0048 | <0.0038 | <0.0048 | 0.020J | <0.0037 | <0.0039 | 0.0053J | 0.056 | <0.0077 |
| Indeno(1,2,3-cd)pyrene | --- | --- | 0.047 | <0.0033 | 0.022 | 0.0058J | <0.0054 | <0.0034 | <0.0054 | <0.0041 | 0.0034J | <0.0034 | <0.0032 | 0.032J | <0.017 |
| 1-Methyl Naphthalene | --- | --- | NA | <0.0029 | NA | 0.077 | NA | <0.0029 | NA | 0.0068J | <0.0028 | <0.0030 | 0.0052J | 0.019J | <0.0057 |
| 2-Methyl Naphthalene | --- | --- | NA | <0.0026 | NA | 0.025J | NA | <0.0026 | NA | 0.0079J | <0.0025 | <0.0026 | 0.0084J | 0.023J | <0.0047 |
| Naphthalene | 10 | 100 | 0.84 | 0.0087J | 0.033 | 0.0087J | <0.010 | <0.0043 | <0.010 | 0.016J | <0.0042 | <0.0044 | 0.0047J | 0.024J | <0.018 |
| Phenanthrene | --- | --- | 0.091 | 0.0076J | 0.088 | 0.038J | 0.034 | <0.0072 | 0.039 | 0.13 | <0.0070 | <0.0074 | 0.0095J | 0.27 | 0.016J |
| Pyrene | 50 | 250 | 0.27 | <0.0072 | 0.057 | 0.049J | 0.022 | <0.0073 | <0.0055 | 0.058 | <0.0071 | <0.0074 | <0.0069 | 0.17 | 0.017J |

*Notes:*
Bold concentrations exceed NR 140 enforcement standards
Italicized concentrations exceed NR 140 preventive action limits
--- - not analyzed
* Total metal concentration, not field filtered
J - Results between the limit of detection and limit of quantitation
NA - not analyzed or not available
PAHs - polycyclic aromatic hydrocarbons
RCRA - resource conservation recovery act
ug/l - micrograms per liter
VOCs - volatile organic compounds

**Table 3. Sub-Slab Vapor Analytical Results, Buildings 33 and 34**
**Former Wayne Pigment Corp, 300 Barclay Street and 139 Oregon Street, Milwaukee, Wisconsin**

| Sample Type - Ambient Air (AA)/Sub-Slab (SS) | Target Sub-Slab Vapor Risk Screening Levels | SS | SS | SS | SS | SS |
|---|---|---|---|---|---|---|
| Sample I.D. | | **VP-1** | **VP-2** | **VP-3** | **VP-4** | **VP-5** |
| Location in Building/Property | | Building 33 | Building 33 | Building 33 | Building 33 | Building 34 |
| Tracer Gas - Present (P) Not Present (NP) | | NP | NP | NP | NP | NP |
| Laboratory | | Pace | Pace | Pace | Pace | Pace |
| Duration of Sample Collection (hrs) | | 0.5 | 0.5 | 0.5 | 0.5 | 0.5 |
| Date Collected | | 11/23/15 | 11/23/15 | 11/23/15 | 11/23/15 | 11/23/15 |
| **VOCs (ug/m$^3$) by EPA Method TO-15** | | | | | | |
| Acetone | 1,066,667 | 35.3 | 18.4 | 22.3 | 20.9 | 75.7 |
| Benzene | 120 | 1.8 | 4.3 | 2.0 | 2.2 | 2.2 |
| Benzyl Chloride | 19 | <0.28 | <0.28 | <0.28 | <0.28 | <0.28 |
| Bromodichloromethane | 25 | <0.33 | <0.33 | <0.33 | <0.33 | <0.33 |
| Bromoform | 867 | <1.5 | <1.5 | <1.5 | <1.5 | <1.5 |
| Bromomethane | 173 | <0.52 | <0.52 | <0.52 | <0.52 | <0.52 |
| 1,3-Butadiene | 31 | <0.30 | <0.30 | <0.30 | <0.30 | <0.30 |
| 2-Butanone (MEK) | 173,333 | 2.3J | <0.38 | <0.38 | <0.38 | <0.38 |
| Carbon disulfide | 24,333 | 14.4 | 0.65J | 8.0 | <0.17 | 1.30 |
| Carbon tetrachloride | 157 | <0.32 | <0.32 | <0.32 | <0.32 | <0.32 |
| Chlorobenzene | 1,733 | <0.23 | <0.23 | <0.23 | <0.23 | <0.23 |
| Chloroethane | --- | <0.33 | <0.33 | <0.33 | <0.33 | <0.33 |
| Chloroform | 40 | 5.5 | 1.8 | 1.4 | 2.4 | 5.4 |
| Chloromethane | 3,133 | <0.18 | <0.18 | <0.18 | <0.18 | <0.18 |
| Cyclohexane | 210,000 | 4.8 | 8.4 | 2.8 | 6.4 | 68.7 |
| Dibromochloromethane | 33 | <1.4 | <1.4 | <1.4 | <1.4 | <1.4 |
| 1,2-Dibromoethane | 2 | <1.3 | <1.3 | <1.3 | <1.3 | <1.3 |
| 1,2-Dichlorobenzene | 7,000 | <0.86 | <0.86 | <0.86 | <0.86 | <0.86 |
| 1,3-Dichlorobenzene | --- | <0.89 | 4.7 | <0.89 | <0.89 | <0.89 |
| 1,4-Dichlorobenzene | 87 | <0.84 | <0.84 | <0.84 | <0.84 | <0.84 |
| Dichlorodifluoromethane | 3,333 | 1.7J | 2.1 | 2.5 | 1.6J | 5.3 |
| 1,1-Dichloroethane | 600 | 3.9 | <0.26 | <0.26 | 11.2 | 142 |
| 1,2-Dichloroethane | 37 | <0.34 | <0.34 | 3.7 | 33.2 | **88.8** |
| 1,1-Dichloroethene | 7,000 | <0.40 | <0.40 | <0.40 | <0.40 | <0.40 |
| cis-1,2-Dichloroethene | --- | <0.41 | <0.41 | <0.41 | <0.41 | 1,030 |
| trans-1,2-Dichloroethene | --- | <0.65 | <0.65 | <0.65 | <0.65 | 7.5 |
| 1,2-Dichloropropane | 93 | <0.45 | <0.45 | <0.45 | <0.45 | <0.45 |
| cis-1,3-Dichloropropene | --- | <0.62 | <0.62 | <0.62 | <0.62 | <0.62 |
| trans-1,3-Dichloropropene | --- | <0.44 | <0.44 | <0.44 | <0.44 | <0.44 |
| Dichlorotetrafluoroethane | --- | <0.52 | <0.52 | <0.52 | <0.52 | <0.52 |
| Ethanol | --- | 33.2 | 92.4 | 20.5 | <0.45 | 66.6 |
| Ethyl acetate | 2,433 | 2.5 | <0.58 | <0.58 | <0.58 | <0.58 |
| Ethylbenzene | 367 | 1.5 | 4.6 | 2.1 | 2.8 | 3.0 |
| 4-Ethyltoluene | --- | <0.32 | 1.0J | 0.89J | <0.32 | <0.32 |
| N-Heptane | --- | 3.0 | 9.6 | 3.9 | 7.7 | 4.3 |
| Hexachloro-1,3-butadiene | --- | <1.1 | <1.1 | <1.1 | <1.1 | <1.1 |
| n-Hexane | 24,333 | 13.5 | 10.3 | 9.3 | 6.6 | 3.6 |
| 2-Hexanone | 1,033 | <0.69 | <0.69 | <0.69 | <0.69 | <0.69 |
| Methylene Chloride | 21,000 | 220 | <0.91 | 102 | <0.91 | <0.91 |
| 4-Methyl-2-pentanone (MIBK) | 103,333 | <0.36 | <0.36 | <0.36 | <0.36 | <0.36 |
| Methyl-tert-butyl ether (MTBE) | 3,667 | <0.51 | <0.51 | <0.51 | <0.51 | <0.51 |
| Naphthalene | 28 | 10.5 | <0.51 | <0.51 | <0.51 | <0.51 |
| 2-Propanol | --- | 3.1J | 15.3 | <0.40 | <0.40 | 55.3 |
| Propene | 103,333 | 9.2 | 21.1 | 5.4 | 7.3 | 3.4 |
| Styrene | 33,333 | <0.32 | <0.32 | <0.32 | <0.32 | <0.32 |
| 1,1,2,2-Tetrachloroethane | 16 | <0.55 | <0.55 | <0.55 | <0.55 | <0.55 |
| Tetrachloroethylene | 1,400 | 2.6 | 1.9 | 3.3 | 4.9 | 5.6 |
| Tetrahydrofuran | --- | <0.20 | <0.20 | <0.20 | <0.20 | <0.20 |
| Toluene | 173,333 | 4.4 | 8.1 | 4.3 | 5.4 | 4.3 |
| 1,2,4-Trichlorobenzene | 70 | <1.5 | <1.5 | <1.5 | <1.5 | <1.5 |
| 1,1,1-Trichloroethane | 173,333 | 181 | 17.5 | 57.3 | 1100 | 5800 |
| 1,1,2-Trichloroethane | 60 | <0.41 | <0.41 | <0.41 | <0.41 | <0.41 |
| Trichloroethylene | 70 | **171** | 3.6 | 9.2 | **219** | **26,200** |
| Trichlorofluoromethane | 24,333 | 2.2 | 1.5J | 2.3 | 1.7J | 1.2J |
| 1,1,2-Trichlorotrifluoroethane | --- | <0.51 | <0.51 | <0.51 | <0.51 | <0.51 |
| 1,2,4-Trimethylbenzene | 243 | 1.5J | 1.6J | 1.6J | <0.21 | <0.21 |
| 1,3,5-Trimethylbenzene | --- | <0.31 | 1.2J | 1.2J | <0.31 | <0.31 |
| Vinyl Acetate | 7,000 | <0.55 | <0.55 | <0.55 | <0.55 | <0.55 |
| Vinyl Chloride | 57 | <0.33 | <0.33 | <0.33 | <0.33 | <0.33 |
| m&p-Xylene | 3,333 | 3.5 | 7.5 | 4.5 | 3.8 | 2.8J |
| o-Xylene | 3,333 | 1.4J | 2.5 | 1.9 | 1.4J | 0.88J |

Bold values exceed target levels
Vapor Action Levels based on USEPA Regional Screening Levels (RSLs), November 2014
ug/m3 = Micrograms per cubic meter
- - no target subslab vapor or indoor air standard
Sub-Slab and near-slab samples colleced using the helium shroud and shut-in test method
Helium meter used to detect tracer gas during sub-slab aqnd near-slab sample collection procedure
All vapor samples collected into 6 liter Summa canisters

**Table 3. Sub-Slab Vapor Analytical Results, Buildings 33 and 34**
**Former Wayne Pigment Corp, 300 Barclay Street and 139 Oregon Street,**

| Sample Type - Ambient Air (AA)/Sub-Slab (SS) | Target Sub-Slab Vapor Risk Screening Levels | SS | SS |
|---|---|---|---|
| Sample I.D. | | **VP-6** | **VP-7** |
| Location in Building/Property | | Building 34 | Building 34 |
| Tracer Gas - Present (P) Not Present (NP) | | NP | NP |
| Laboratory | | Pace | Pace |
| Duration of Sample Collection (hrs) | | 0.5 | 0.5 |
| Date Collected | | 11/23/15 | 11/23/15 |
| **VOCs (ug/m$^3$) by EPA Method TO-15** | | | |
| Acetone | 1,066,667 | 574 | 88.4 |
| Benzene | 120 | 4.8 | 4.2 |
| Benzyl Chloride | 19 | <0.22 | <0.28 |
| Bromodichloromethane | 25 | <0.26 | <0.33 |
| Bromoform | 867 | <1.2 | <1.5 |
| Bromomethane | 173 | <0.42 | <0.52 |
| 1,3-Butadiene | 31 | <0.24 | <0.30 |
| 2-Butanone (MEK) | 173,333 | 22.7 | 19.1 |
| Carbon disulfide | 24,333 | 8.0 | 1.8 |
| Carbon tetrachloride | 157 | <0.26 | <0.32 |
| Chlorobenzene | 1,733 | <0.18 | <0.23 |
| Chloroethane | --- | <0.26 | <0.33 |
| Chloroform | 40 | 5.0 | 2.0 |
| Chloromethane | 3,133 | <0.14 | <0.18 |
| Cyclohexane | 210,000 | 81.0 | 9.5 |
| Dibromochloromethane | 33 | <1.1 | <1.4 |
| 1,2-Dibromoethane | 2 | <1.0 | <1.3 |
| 1,2-Dichlorobenzene | 7,000 | <0.69 | <0.86 |
| 1,3-Dichlorobenzene | --- | <0.71 | <0.89 |
| 1,4-Dichlorobenzene | 87 | <0.67 | <0.84 |
| Dichlorodifluoromethane | 3,333 | 1.7 | 1.5J |
| 1,1-Dichloroethane | 600 | 94.7 | 19.3 |
| 1,2-Dichloroethane | 37 | **74.6** | 22.8 |
| 1,1-Dichloroethene | 7,000 | 5.4 | <0.40 |
| cis-1,2-Dichloroethene | --- | 893 | 10.5 |
| trans-1,2-Dichloroethene | --- | 8.7 | <0.65 |
| 1,2-Dichloropropane | 93 | <0.36 | <0.45 |
| cis-1,3-Dichloropropene | --- | <0.49 | <0.62 |
| trans-1,3-Dichloropropene | --- | <0.35 | <0.44 |
| Dichlorotetrafluoroethane | --- | <0.42 | <0.52 |
| Ethanol | --- | 119 | 6.8 |
| Ethyl acetate | 2,433 | <0.47 | <0.58 |
| Ethylbenzene | 367 | 4.4 | 3.6 |
| 4-Ethyltoluene | --- | 0.95J | <0.32 |
| N-Heptane | --- | 7.0 | 8.2 |
| Hexachloro-1,3-butadiene | --- | <0.87 | <1.1 |
| n-Hexane | 24,333 | 10.4 | 10.9 |
| 2-Hexanone | 1,033 | <0.55 | <0.69 |
| Methylene Chloride | 21,000 | 16.6 | <0.91 |
| 4-Methyl-2-pentanone (MIBK) | 103,333 | 11.6 | <0.36 |
| Methyl-tert-butyl ether (MTBE) | 3,667 | <0.41 | <0.51 |
| Naphthalene | 28 | <0.41 | <0.51 |
| 2-Propanol | --- | 243 | 32.8 |
| Propene | 103,333 | 15.5 | 16.3 |
| Styrene | 33,333 | <0.26 | <0.32 |
| 1,1,2,2-Tetrachloroethane | 16 | <0.44 | <0.55 |
| Tetrachloroethylene | 1,400 | 4.7 | 15.9 |
| Tetrahydrofuran | --- | <0.16 | <0.20 |
| Toluene | 173,333 | 30.8 | 7.0 |
| 1,2,4-Trichlorobenzene | 70 | <1.2 | <1.5 |
| 1,1,1-Trichloroethane | 173,333 | 4740 | 878 |
| 1,1,2-Trichloroethane | 60 | <0.33 | <0.41 |
| Trichloroethylene | 70 | **41,600** | **3,950** |
| Trichlorofluoromethane | 24,333 | 1.2J | 0.98J |
| 1,1,2-Trichlorotrifluoroethane | --- | <0.40 | <0.51 |
| 1,2,4-Trimethylbenzene | 243 | 2.0 | 1.4J |
| 1,3,5-Trimethylbenzene | --- | 1.1J | <0.31 |
| Vinyl Acetate | 7,000 | <0.44 | <0.55 |
| Vinyl Chloride | 57 | <0.26 | <0.33 |
| m&p-Xylene | 3,333 | 11.2 | 6.6 |
| o-Xylene | 3,333 | 3.6 | 2.7 |

Bold values exceed target levels
Vapor Action Levels based on USEPA Regional Screening Levels (RSLs), No
ug/m3 = Micrograms per cubic meter
- - no target subslab vapor or indoor air standard
Sub-Slab and near-slab samples colleced using the helium shroud and shut-ir
Helium meter used to detect tracer gas during sub-slab aqnd near-slab sampl
All vapor samples collected into 6 liter Summa canisters

**Table 4. Near-Slab Soil Gas Analytical Results, Building 11**
**Former Wayne Pigment Corp, 300 Barclay Street and 139 Oregon Street, Milwaukee, Wisconsin**

| Sample Type - Near Slab Soil Gas (NSSG) | Target Soil Gas Risk Screening Levels | Target Indoor Air Vapor Action Levels | NSSG | NSSG | NSSG | NSSG |
|---|---|---|---|---|---|---|
| Sample I.D. | | | **SG-1** | **SG-2** | **SG-3** | **SG-4** |
| Location in Building/Property | | | Building 11 | Building 11 | Building 11 | Building 11 |
| Tracer Gas - Present (P) Not Present (NP) | | | NP | NP | NP | NP |
| Laboratory | | | PACE | PACE | PACE | PACE |
| Duration of Sample Collection (hrs) | | | 0.5 | 0.5 | 0.5 | 0.5 |
| Date Collected | | | 12/24/15 | 12/24/15 | 12/24/15 | 12/24/15 |
| **VOCs (ug/m$^3$) by EPA Method TO-15** | | | | | | |
| Acetone | 3,200,000 | 32,000 | 17.5 | 9.6 | 18.4 | <25.8 |
| Benzene | 360 | 3.6 | 169 | 1.6 | 0.60 | <3.8 |
| Benzyl Chloride | 57 | 0.57 | <0.27 | <0.28 | <0.30 | <5.1 |
| Bromodichloromethane | 76 | 0.76 | <0.31 | <0.33 | <0.36 | <6.0 |
| Bromoform | 2,600 | 26 | <1.5 | <1.5 | <1.6 | <27.9 |
| Bromomethane | 520 | 5.2 | <0.50 | <0.52 | <0.57 | <9.6 |
| 1,3-Butadiene | 94 | 0.94 | <0.28 | <0.30 | <0.32 | <5.5 |
| 2-Butanone (MEK) | 520,000 | 5,200 | 4.8J | <0.38 | 4.5J | <7.1 |
| Carbon disulfide | 73,000 | 730 | 17.8 | 3.9 | 0.74J | <3.1 |
| Carbon tetrachloride | 470 | 4.7 | <0.31 | <0.32 | <0.35 | <6.0 |
| Chlorobenzene | 5,200 | 52 | <0.22 | <0.23 | <0.25 | <4.2 |
| Chloroethane | -- | --- | <0.31 | <0.33 | <0.36 | <6.0 |
| Chloroform | 120 | 1.2 | <0.31 | <0.32 | <0.35 | <5.9 |
| Chloromethane | 9,400 | 94 | 1.4 | 1.1 | 0.80 | <3.3 |
| Cyclohexane | 630,000 | 6,300 | 18.0 | 3.0 | 1.2J | <9.8 |
| Dibromochloromethane | 100 | 1 | <1.4 | <1.4 | <1.6 | <26.5 |
| 1,2-Dibromoethane | 5 | 0.047 | <1.2 | <1.3 | <1.4 | <24.0 |
| 1,2-Dichlorobenzene | 21,000 | 210 | <0.82 | <0.86 | <0.94 | <15.9 |
| 1,3-Dichlorobenzene | -- | --- | <0.85 | <0.89 | <0.97 | <16.4 |
| 1,4-Dichlorobenzene | 260 | 2.6 | 1.1J | <0.84 | 1.3J | <15.5 |
| Dichlorodifluoromethane | 10,000 | 100 | 2.7 | 2.8 | 2.4 | <14.9 |
| 1,1-Dichloroethane | 1,800 | 18 | <0.25 | <0.26 | <0.29 | <4.9 |
| 1,2-Dichloroethane | 110 | 1.1 | <0.33 | <0.34 | 0.38 | <6.4 |
| 1,1-Dichloroethene | 21,000 | 210 | <0.38 | <0.40 | <0.44 | <7.4 |
| cis-1,2-Dichloroethene | -- | --- | <0.40 | <0.41 | <0.45 | <7.6 |
| trans-1,2-Dichloroethene | -- | --- | <0.62 | <0.65 | <0.70 | <11.9 |
| 1,2-Dichloropropane | 280 | 2.8 | <0.43 | <0.45 | <0.49 | <8.4 |
| cis-1,3-Dichloropropene | -- | --- | <0.59 | <0.62 | <0.68 | <11.4 |
| trans-1,3-Dichloropropene | -- | --- | <0.42 | <0.44 | <0.48 | <8.1 |
| Dichlorotetrafluoroethane | -- | --- | <0.50 | <0.52 | <0.57 | <9.6 |
| Ethanol | -- | --- | 6.5 | 7.0 | 7.8 | <8.2 |
| Ethyl acetate | 7,300 | 73 | <0.56 | <0.58 | <0.64 | <10.8 |
| Ethylbenzene | 1,100 | 11 | 19.4 | 1.9 | 22.6 | <13.2 |
| 4-Ethyltoluene | -- | --- | 1.5J | <0.32 | <0.34 | <5.8 |
| N-Heptane | -- | --- | 14.3 | 5.6 | 0.92J | <8.6 |
| Hexachloro-1,3-butadiene | -- | --- | <1.0 | <1.1 | <1.2 | <20.2 |
| n-Hexane | 73,000 | 730 | 16.2 | 10.5 | 1.6 | <11.1 |
| 2-Hexanone | 3,100 | 31 | <0.66 | <0.69 | <0.75 | <12.7 |
| Methylene Chloride | 63,000 | 630 | <0.87 | <0.91 | <0.99 | <16.8 |
| 4-Methyl-2-pentanone (MIBK) | 310,000 | 3,100 | 0.87J | <0.36 | <0.40 | <6.7 |
| Methyl-tert-butyl ether (MTBE) | 11,000 | 110 | <0.49 | <0.51 | <0.55 | <9.4 |
| Naphthalene | 83 | 0.83 | 5.4 | <0.51 | <0.56 | <9.5 |
| 2-Propanol | -- | --- | <0.39 | <0.40 | <0.44 | <7.4 |
| Propene | 310,000 | 3,100 | 49.1 | 10.9 | 3.6 | <4.2 |
| Styrene | 100,000 | 1,000 | <0.31 | <0.32 | <0.35 | <6.0 |
| 1,1,2,2-Tetrachloroethane | 48 | 0.48 | <0.53 | <0.55 | <0.60 | <10.2 |
| Tetrachloroethylene | 4,200 | 42 | 1.0J | <0.47 | 0.75J | **9400** |
| Tetrahydrofuran | -- | --- | <0.19 | <0.20 | <0.22 | <3.7 |
| Toluene | 520,000 | 5,200 | 25.0 | 15.5 | 3.7 | 6.1J |
| 1,2,4-Trichlorobenzene | 210 | 2.1 | <1.5 | <1.5 | <1.7 | <28.2 |
| 1,1,1-Trichloroethane | 520,000 | 5,200 | <0.40 | <0.41 | <0.45 | <7.7 |
| 1,1,2-Trichloroethane | 180 | 1.8 | <0.40 | <0.41 | <0.45 | <7.6 |
| Trichloroethylene | 210 | 2.1 | 0.61J | <0.46 | <0.51 | <8.6 |
| Trichlorofluoromethane | 73,000 | 730 | 1.3J | 1.6J | 1.5J | <4.1 |
| 1,1,2-Trichlorotrifluoroethane | -- | --- | 0.48 | <0.51 | <0.55 | <9.3 |
| 1,2,4-Trimethylbenzene | 730 | 7.3 | 3.5 | 2.5 | <0.23 | <3.9 |
| 1,3,5-Trimethylbenzene | -- | --- | 1.7 | 0.89J | <0.33 | <5.7 |
| Vinyl Acetate | 21,000 | 210 | <0.53 | <0.55 | 1.6 | <10.2 |
| Vinyl Chloride | 170 | 1.7 | <0.31 | <0.33 | <0.36 | <6.0 |
| m&p-Xylene | 10,000 | 100 | 72.3 | 7.2 | 84.4 | <24.4 |
| o-Xylene | 10,000 | 100 | 34.8 | 2.7 | 30.4 | <10.9 |

Bold values exceed target levels
Vapor Action Levels based on USEPA Regional Screening Levels (RSLs), November 2014
µg/m$^3$ = Micrograms per cubic meter
- - no target deep soil gas or indoor air standard
Deep soil gas samples were colleced using the helium shroud and shut-in test method
Helium meter used to detect tracer gas during deep soil gas sample collection procedure
All vapor samples collected into 6 liter Summa canisters

**Table 4. Near-Slab Soil Gas Analytical Results, Building 11**
**Former Wayne Pigment Corp, 300 Barclay Street and 139 Oregon Street, Milwaukee, Wisco**

| Sample Type - Near Slab Soil Gas (NSSG) | Target Soil Gas Risk Screening Levels | Target Indoor Air Vapor Action Levels | NSSG | NSSG | NSSG |
|---|---|---|---|---|---|
| Sample I.D. | | | **SG-5** | **SG-6** | **SG-7** |
| Location in Building/Property | | | Building 11 | Building 11 | Building 11 |
| Tracer Gas - Present (P) Not Present (NP) | | | NP | NP | NP |
| Laboratory | | | PACE | PACE | PACE |
| Duration of Sample Collection (hrs) | | | 0.5 | 0.5 | 0.5 |
| Date Collected | | | 12/24/15 | 12/24/15 | 12/24/15 |
| **VOCs (ug/m$^3$) by EPA Method TO-15** | | | | | |
| Acetone | 3,200,000 | 32,000 | 9.3 | 23.5 | 9.4 |
| Benzene | 360 | 3.6 | <0.25 | <0.23 | 0.73 |
| Benzyl Chloride | 57 | 0.57 | <0.35 | <0.31 | <0.26 |
| Bromodichloromethane | 76 | 0.76 | <0.40 | <0.36 | <0.30 |
| Bromoform | 2,600 | 26 | <1.9 | <1.7 | <1.4 |
| Bromomethane | 520 | 5.2 | <0.64 | <0.58 | <0.48 |
| 1,3-Butadiene | 94 | 0.94 | <0.37 | <0.33 | <0.27 |
| 2-Butanone (MEK) | 520,000 | 5,200 | 2.3J | 12.2 | 1.4J |
| Carbon disulfide | 73,000 | 730 | 1.3J | 6.5 | 0.61J |
| Carbon tetrachloride | 470 | 4.7 | <0.40 | <0.36 | <0.30 |
| Chlorobenzene | 5,200 | 52 | <0.28 | <0.25 | <0.21 |
| Chloroethane | -- | --- | <0.40 | <0.36 | <0.30 |
| Chloroform | 120 | 1.2 | 1.8 | <0.35 | <0.29 |
| Chloromethane | 9,400 | 94 | 0.47J | 0.70J | 1.1 |
| Cyclohexane | 630,000 | 6,300 | 1.1J | 1.3J | 1.5 |
| Dibromochloromethane | 100 | 1 | <1.8 | <1.6 | <1.3 |
| 1,2-Dibromoethane | 5 | 0.047 | <1.6 | <1.4 | <1.2 |
| 1,2-Dichlorobenzene | 21,000 | 210 | <1.1 | <0.95 | <0.79 |
| 1,3-Dichlorobenzene | -- | --- | <1.1 | <0.99 | 8.3 |
| 1,4-Dichlorobenzene | 260 | 2.6 | 1.5J | 1.3J | 1.5J |
| Dichlorodifluoromethane | 10,000 | 100 | 2.8 | 2.4 | 2.9 |
| 1,1-Dichloroethane | 1,800 | 18 | <0.33 | <0.29 | <0.24 |
| 1,2-Dichloroethane | 110 | 1.1 | <0.43 | <0.38 | <0.32 |
| 1,1-Dichloroethene | 21,000 | 210 | <0.50 | <0.44 | <0.37 |
| cis-1,2-Dichloroethene | -- | --- | <0.51 | <0.46 | <0.38 |
| trans-1,2-Dichloroethene | -- | --- | <0.80 | <0.71 | <0.60 |
| 1,2-Dichloropropane | 280 | 2.8 | <0.56 | <0.50 | <0.42 |
| cis-1,3-Dichloropropene | -- | --- | <0.77 | <0.69 | <0.57 |
| trans-1,3-Dichloropropene | -- | --- | <0.54 | <0.48 | <0.40 |
| Dichlorotetrafluoroethane | -- | --- | <0.64 | <0.58 | <0.48 |
| Ethanol | -- | --- | 4.0 | 11.6 | 3.9 |
| Ethyl acetate | 7,300 | 73 | <0.72 | 2.3 | <0.54 |
| Ethylbenzene | 1,100 | 11 | 5.0 | 2.3 | 2.5 |
| 4-Ethyltoluene | -- | --- | <0.39 | <0.35 | <0.29 |
| N-Heptane | -- | --- | <0.58 | 1.2J | 1.4 |
| Hexachloro-1,3-butadiene | -- | --- | <1.4 | <1.2 | <1.0 |
| n-Hexane | 73,000 | 730 | <0.74 | 1.8 | 1.2 |
| 2-Hexanone | 3,100 | 31 | <0.85 | <0.76 | <0.64 |
| Methylene Chloride | 63,000 | 630 | 1.5J | 2.2J | 1.7J |
| 4-Methyl-2-pentanone (MIBK) | 310,000 | 3,100 | <0.45 | 6.0J | <0.34 |
| Methyl-tert-butyl ether (MTBE) | 11,000 | 110 | <0.63 | <0.56 | <0.47 |
| Naphthalene | 83 | 0.83 | <0.63 | 5.2 | <0.47 |
| 2-Propanol | -- | --- | <0.50 | <0.45 | 23.9 |
| Propene | 310,000 | 3,100 | <0.28 | <0.25 | <0.21 |
| Styrene | 100,000 | 1,000 | <0.40 | <0.36 | <0.30 |
| 1,1,2,2-Tetrachloroethane | 48 | 0.48 | <0.68 | <0.61 | <0.51 |
| Tetrachloroethylene | 4,200 | 42 | 5.5 | <0.52 | <0.43 |
| Tetrahydrofuran | -- | --- | 2.2 | 31.8 | <0.18 |
| Toluene | 520,000 | 5,200 | 3.3 | 6.9 | 6.8 |
| 1,2,4-Trichlorobenzene | 210 | 2.1 | <1.9 | <1.7 | <1.4 |
| 1,1,1-Trichloroethane | 520,000 | 5,200 | <0.51 | <0.46 | <0.38 |
| 1,1,2-Trichloroethane | 180 | 1.8 | <0.51 | <0.46 | <0.38 |
| Trichloroethylene | 210 | 2.1 | <0.57 | <0.51 | 1.0 |
| Trichlorofluoromethane | 73,000 | 730 | 6.0 | 2.1J | 1.5J |
| 1,1,2-Trichlorotrifluoroethane | -- | --- | <0.63 | <0.56 | <0.47 |
| 1,2,4-Trimethylbenzene | 730 | 7.3 | 1.2J | 1.6J | 1.2J |
| 1,3,5-Trimethylbenzene | -- | --- | <0.38 | <0.34 | <0.28 |
| Vinyl Acetate | 21,000 | 210 | <0.69 | <0.61 | <0.51 |
| Vinyl Chloride | 170 | 1.7 | <0.41 | <0.36 | <0.30 |
| m&p-Xylene | 10,000 | 100 | 21.8 | 9.6 | 7.3 |
| o-Xylene | 10,000 | 100 | 9.6 | 3.5 | 2.3 |

Bold values exceed target levels
Vapor Action Levels based on USEPA Regional Screening Levels (RSLs), November 2014
µg/m$^3$ = Micrograms per cubic meter
- - no target deep soil gas or indoor air standard
Deep soil gas samples were colleced using the helium shroud and shut-in test method
Helium meter used to detect tracer gas during deep soil gas sample collection procedure
All vapor samples collected into 6 liter Summa canisters

**Table 5. Soil Gas Measurements**
**Former Wayne Pigment Corp, 300 Barclay Street and 139 Oregon Street, Milwaukee, Wisconsin**

| Soil Gas Point | Date | Open Test | | | | |
|---|---|---|---|---|---|---|
| | | Methane (%) | O2 (%) | CO (ppm) | H2S (ppm) | PID (ppm) |
| SG-8 | 2/16/2017 | 0.0 | 21.9 | 0.0 | 0.0 | 1.1 |
| SG-9 | 2/16/2017 | 0.0 | 23.3 | 0.0 | 0.0 | 0.1 |
| SG-10 | 2/16/2017 | 0.0 | 21.6 | 0.0 | 0.0 | 0.0 |
| | | | | | | |
| SG-8 | 2/17/2017 | 0.0 | 21.2 | 0.0 | 0.0 | 1.5 |
| SG-9 | 2/17/2017 | 0.0 | 22.3 | 0.0 | 0.0 | 0.9 |
| SG-10 | 2/17/2017 | 0.0 | 21.5 | 0.0 | 0.0 | 8.6 |

| Soil Gas Point | Date | Closed Test | | | | |
|---|---|---|---|---|---|---|
| | | Methane (%) | O2 (%) | CO (ppm) | H2S (ppm) | PID (ppm) |
| SG-8 | 2/16/2017 | 0.0 | 19.4 | 0.0 | 0.0 | 38.3 |
| SG-9 | 2/16/2017 | 0.0 | 19.5 | 5.0 | 0.0 | 17.0 |
| SG-10 | 2/16/2017 | 0.0 | 20.9 | 0.0 | 0.0 | 66.7 |
| | | | | | | |
| SG-8 | 2/17/2017 | 0.0 | 19.4 | 3.0 | 0.0 | 19.7 |
| SG-9 | 2/17/2017 | 0.0 | 19.5 | 0.0 | 0.0 | 9.4 |
| SG-10 | 2/17/2017 | 0.0 | 20.7 | 0.0 | 0.0 | 49.2 |

% - percent
ppm - parts per million

# Appendix 1

Key Engineering Group, Ltd.

**PHOTOGRAPH 1:**

View of north and west sides of Building 11 looking south down South Barclay Street.

**PHOTOGRAPH 2:**

View of south side of Building 11 including asphalt lot and former AST concrete saddles and containment area.

**PHOTOGRAPH 3:**

View of alley and east side of Building 11 looking south.

**PHOTOGRAPH 4:**

View of east and north side of Building 33 looking south down South Barclay Street.

**PHOTOGRAPH 5:**

View of Building 33 (left) and Building 34 (right) and elevated walkway connecting buildings. View looking east.

**PHOTOGRAPH 6:**

View of loading dock on west side of Building 34 looking southeast.

**PHOTOGRAPH 7:**

View of Buildings 33 and 34 and asphalt lot looking southeast.

**PHOTOGRAPH 8:**

View of Building 35 (left) and elevated railroad line (right) looking southwest.

**PHOTOGRAPH 9:**

View of elevated railroad line between Building 34 (right) and Building 35 (left) looking west.

# Appendix 2

Key Engineering Group, Ltd.

# THE BARCLAY - BUILDING 11

300 S. BARCLAY AVE.,
MILWAUKEE, WI 53204

03/03/17

CAP PROJECT #: 150302

## PLAN EXAMINATION - RESUBMITTAL

CONTINUUM
ARCHITECTS + PLANNERS, S.C.

PLANNING - INTERIOR DESIGN

ARCHITECTURE - MASTER

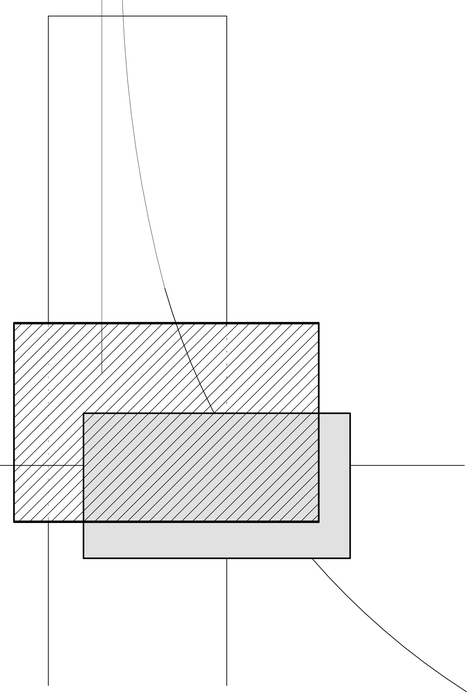


OWNER:
SHERMAN ASSOCIATES, INC
223 PARK AVENUE, SUITE 201
MINNEAPOLIS, MN 55415
TEL. (612) 332-3000
FAX. (612) 332-8119

ARCHITECT:
CONTINUUM ARCHITECTS + PLANNERS, S.C.
228 SOUTH FIRST STREET - SUITE 301
MILWAUKEE, WI 53204
TEL. (414) 220-9640
FAX. (414) 220-9595

GENERAL CONTRACTOR:
GREENFIRE MANAGEMENT SERVICES, LLC
3215 WEST STATE STREET SUITE 300
MILWAUKEE, WI 53208
TEL. (414) 290-9400
FAX. (414) 345-9525

STRUCTURAL ENGINEER:
SPIRE ENGINEERING
600 W. VIRGINIA STREET - SUITE 102
MILWAUKEE, WI 53204
TEL. (414) 278-9200

CIVIL ENGINEER:
AYRES ASSOCIATES
101 EAST BADGER ROAD
MADISON, WI 53719
TEL. (608) 255-0800

MECHANICAL ENGINEER:
MATRIX GROUP (SCOPE DOCUMENTS ONLY)
311 EAST CHICAGO STREET
MILWAUKEE, WI 5322
TEL. (414) 329-2827

PLUMBING ENGINEER:
MATRIX GROUP (SCOPE DOCUMENTS ONLY)
311 EAST CHICAGO STREET
MILWAUKEE, WI 5322
TEL. (414) 329-2827

FIRE PROTECTION ENGINEER:
MATRIX GROUP
311 EAST CHICAGO STREET
MILWAUKEE, WI 5322
TEL. (414) 329-2827

ELECTRICAL ENGINEER:
MATRIX GROUP (SCOPE DOCUMENTS ONLY)
311 EAST CHICAGO STREET
MILWAUKEE, WI 5322
TEL. (414) 329-2827


WISCONSIN
KATHERINE A. MACDONALD
E - 39030
MADISON, WI
PROFESSIONAL ENGINEER
3-3-17

SHEET INDEX


T1.000 TITLE SHEET - 11

CIVIL
C0.00 SURVEY
C1.10 EXISTING CONDITIONS, SITE DEMOLITION & EROSION CONTROL PLAN
C1.20 SITE PLAN
C1.30 SITE GRADING & DRAINAGE PLAN

ARCHITECTURAL
A0.01 GENERAL INFORMATION SHEET
A0.02 PARTITION TYPES

A1.01 LIFE SAFETY PLANS - EAST BUILDING
A1.02 LIFE SAFETY PLANS - EAST BUILDING
A1.03 ARCHITECTURAL SITE PLAN - EAST BUILDING
A1.10 DEMOLITION PLANS - EAST BUILDING
A1.11 NEW WORK PLAN - BASEMENT & LEVEL 1 - EAST BUILDING
A1.22 NEW WORK PLAN - LEVELS 2 & 3 - EAST BUILDING
A1.23 NEW WORK PLAN - LEVELS 4 & 5 - EAST BUILDING
A1.24 NEW WORK PLAN - ROOF LEVEL - EAST BUILDING
A1.30 REFLECTED CEILING PLAN - BASEMENT & LEVEL 1 - EAST BUILDING
A1.31 REFLECTED CEILING PLAN - LEVELS 2-5 - EAST BUILDING
A1.32 NEW WORK PLAN - INFILL & PATCH - EAST BUILDING
A1.39 WINDOW TYPES - EAST BUILDING
A1.40 WINDOW TYPES - EAST BUILDING
A1.41 WINDOW DETAILS - EAST BUILDING
A1.42 EXTERIOR ELEVATIONS - EAST BUILDING
A1.43 EXTERIOR ELEVATIONS - EAST BUILDING
A1.50 BUILDING SECTIONS AND EXTERIOR WALL SECTIONS - EAST BUILDING
A1.51 EXTERIOR WALL SECTIONS - EAST BUILDING
A1.55 EXTERIOR DETAILS - EAST BUILDING
A1.56 EXTERIOR DETAILS - EAST BUILDING
A1.60 ENLARGED UNIT PLANS - EAST BUILDING
A1.61 ENLARGED UNIT PLANS - EAST BUILDING
A1.62 ENLARGED UNIT PLANS - EAST BUILDING
A1.63 ENLARGED UNIT PLANS - EAST BUILDING
A1.70 INTERIOR ELEVATIONS
A1.71 INTERIOR DETAILS
A1.75 STAIR DETAILS
A1.80 DOOR SCHEDULE AND DETAILS
A1.90 ROOM FINISH SCHEDULE

STRUCTURAL
S0.01 STRUCTURAL NOTES AND SCHEDULES
S1.20 FOUNDATION & LEVEL 1 FRAMING PLAN
S1.21 LEVEL 2 & LEVEL 3 FRAMING PLAN
S1.22 LEVEL 4 & LEVEL 5 FRAMING PLAN
S1.26 ROOF AND PENTHOUSE ROOF FRAMING PLAN
S3.00 STRUCTURAL DETAILS
S3.01 STRUCTURAL DETAILS
S4.00 STRUCTURAL DETAILS
S4.01 STRUCTURAL DETAILS

PLUMBING
P0.01 SYMBOLS, ABBREVIATIONS AND SCHEDULES - PLUMBING
P0.02 DETAILS - PLUMBING
P1.20 FOUNDATION AND BASEMENT LEVEL - EAST BUILDING - PLUMBING
P1.21 LEVEL 1 AND LEVEL 2 - EAST BUILDING - PLUMBING
P1.22 LEVEL 3 AND LEVEL 4 - EAST BUILDING - PLUMBING
P1.23 LEVEL 5 AND ROOF LEVEL - EAST BUILDING - PLUMBING
P2.00 ENLARGED UNIT PLANS - EAST BUILDING - PLUMBING

FIRE PROTECTION
FP1.20 FIRE PROTECTION SCOPE FLOORPLAN - LOWER LEVEL - EAST BUILDING
FP1.21 FIRE PROTECTION SCOPE FLOOR PLAN - LEVEL 1 - EAST BUILDING
FP1.23 FIRE PROTECTION SCOPE FLOOR PLAN - LEVLE 3 - EAST BUILDING
FP1.24 FIRE PROTECTION SCOPE FLOOR PLAN - LEVLE 4 - EAST BUILDING
FP1.25 FIRE PROTECTION SCOPE FLOOR PLAN - LEVLE 5 - EAST BUILDING
FP1.26 FIRE PROTECTION SCOPE FLOOR PLAN - ROOF - EAST BUILDING

MECHANICAL
M1.10 MECHANICAL PLANS - BASEMENT & LEVEL 1 - EAST BUILDING
M1.11 MECHANICAL PLANS - LEVELS 2 & 3 - EAST BUILDING
M1.12 MECHANICAL PLANS LEVELS 4& 5 - EAST BUILDING
M1.13 MECHANICAL PLAN - ROOF LEVEL - EAST BUILDING
M1.20 ENLARGED MECHANICAL UNIT PLANS - EAST BUILDING

ELECTRICAL
E1.00 ELECTRICAL SYMBOLS, ABBREVIATIONS, AND DETAILS
E1.01 ELECTRICAL SITE PLAN
E1.20 ELECTRICAL FLOOR PLAN - LOWER LEVEL - EAST BUILDING
E1.21 ELECTRICAL FLOOR PLAN - LEVEL 1 - EAST BUILDING
E1.22 ELECTRICAL FLOOR PLAN - LEVEL 2 - EAST BUILDING
E1.23 ELECTRICAL FLOOR PLAN - LEVEL 3 - EAST BUILDING
E1.24 ELECTRICAL FLOOR PLAN - LEVEL 4 - EAST BUILDING
E1.25 ELECTRICAL FLOOR PLAN - LEVEL 5 - EAST BUILDING
E1.26 ELECTRICAL FLOOR PLAN - ROOF - EAST BUILDING
E1.30 ELECTRICAL ENLARGED UNIT PLAN - EAST BUILDING
E1.40 ELECTRICAL SERVICE ONE LINE DIAGRAM - EAST BUILDING
E1.41 ELECTRICAL SCHEDULES AND DETAILS


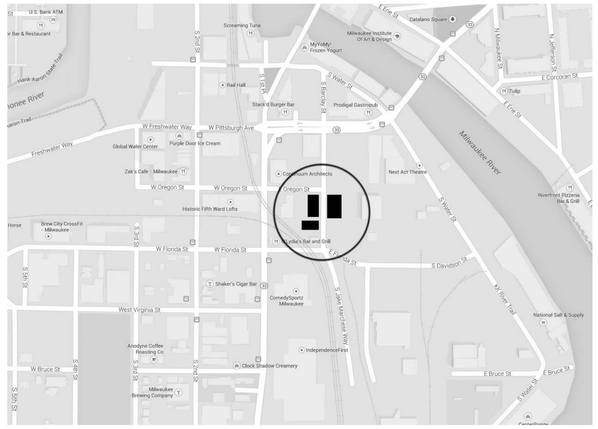


AREA LOCATION MAP
NO SCALE

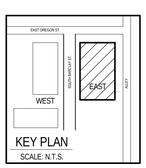


KEY PLAN
SCALE: N.T.S.


CONTINUUM
ARCHITECTS+PLANNERS,S.C.
P.O. BOX 5,00663
MILWAUKEE,WI 53203
T 414.220.9640
F 414.220.9595


CONSULTANTS:

AYRES ASSOCIATES

spire ENGINEERING

THE MATRIX GROUP ENGINEERING CONSULTANTS
311 EAST CHICAGO STREET, SUITE 310, MILWAUKEE, WI 53202
PHONE: (414) 329-2827 FAX: (414) 329-2820


© COPYRIGHT 2017, CONTINUUM ARCHITECTS + PLANNERS S.C.


THE BARCLAY - BUILDING 11
300 S. BARCLAY AVE., MILWAUKEE, WI 53204

SHEET TITLE:
TITLE SHEET - 11

REVISIONS:

| | |
|---|---|
| SCALE | VARIES |
| PROJECT NUMBER | 150302 |
| SET TYPE | PLAN EXAMINATION - RESUBMITTAL |
| DATE ISSUED | 03/03/17 |
| SHEET NUMBER | T1.000 |

C:\Users\corey.lapworth\Documents\150302-PPG_corey.lapworth.rvt
3/10/2017 2:22:38 PM

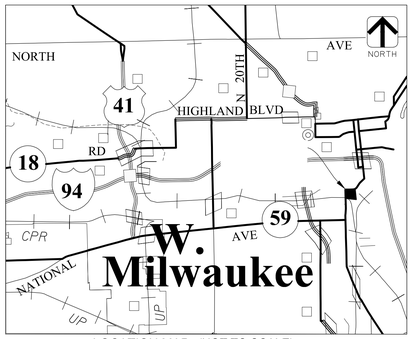


LOCATION MAP (NOT TO SCALE)

| Control Point Table | | | |
|---|---|---|---|
| Point # | Northing | Easting | Description |
| CP 100 | 295642.66' | 605781.71' | MAG NAIL |
| CP 101 | 295628.34' | 605906.80' | MAG NAIL |
| CP 102 | 295860.62' | 605798.12' | 8" SPIKE |
| CP 103 | 295857.93' | 605902.26' | MAG NAIL |
| CP 104 | 295561.21' | 606058.01 | MAG NAIL |
| CP 105 | 295561.99' | 605953.56' | MAG NAIL |
| CP 106 | 295417.81' | 605926.93' | 7" SPIKE |
| CP 107 | 295533.66' | 606042.49' | MAG NAIL |
| CP 106 | 295417.81' | 605926.93' | 7" SPIKE |
| CP 107 | 295533.66' | 606042.49' | MAG NAIL |
| CP 109 | 295545.40' | 605848.26 | 7" SPIKE |

Coordinates are based on the County Coordinate System NAD 83 (2011), Milwaukee County Zone.

| Benchmark Table | | |
|---|---|---|
| BM # | Elevation | Description |
| 1 | 11.52' | SW. UPPER FLANGE BOLT OF HYDRANT |
| 2 | 11.09' | S. UPPER FLANGE BOLT OF HYDRANT |
| 3 | 8.53' | N. UPPER FLANGE BOLT OF HYDRANT |

Elevations based on the City of Milwaukee Vertical Datum.

SURVEY NOTES

1. Publicly owned underground utilities were marked and surveyed as part of this survey and are shown hereon. (Diggers Hotline ticket nos. 201512009039, 20152009055, 20151823072, 20151823224, 20151823207, 20151823193, and 20152009066)

2. Location of underground utilities shown are based on a typical analysis of the location of visible structures, markings set by Diggers Hotline and record plans provided by the City of Milwaukee. Actual underground utility locations and extent are not known and may vary from that shown. Contact Diggers Hotline at least 3 days prior to any excavation.

3. Field work completed May 2015

LEGEND

- BENCHMARK
- CP 1 CONTROL POINT
- LIGHTPOLE
- CONIFEROUS TREE (W/ DIA.)
- DECIDUOUS TREE (W/ DIA.)
- SHRUB
- BUSH
- MH MANHOLE
- STORM/SANITARY STRUCTURE NO.
- PROTECTIVE BOLLARD
- GAS VALVE
- POWER POLE
- HYDRANT
- WV WATER VALVE
- MWEL MONITORING WELL
- W WATER MAIN
- SS STORM SEWER
- SAN SANITARY SEWER
- FO FIBER OPTIC
- G UNDERGROUND GAS LINE
- E UNDERGROUND ELECTRIC
- OH OVERHEAD ELECTRIC
- FOUND CHISELED "X"
- FOUND IRON PIPE

| SANITARY/STORM STRUCTURES | | | | |
|---|---|---|---|---|
| STRUCTURE NO. | STRUCTURE TYPE | RIM | INVERT ELEV./ DIRECTION | PIPE SIZE/ MATERIAL |
| 150 | STORM MH | 6.22' | -4.40' - N<br>-5.00' - NW<br>-5.40' - SE | 24" CONCRETE<br>60" CONCRETE<br>60" CONCRETE |
| 151 | SANITARY MH | 6.83' | -0.70' - N/S<br>-0.30' - W | 18" CONCRETE<br>12" CONCRETE |
| 152 | STORM MH | 7.20' | -2.80' - N<br>0.40' - NE<br>-3.70' - SE | 24" CONCRETE<br>8" CONCRETE<br>24" CONCRETE |
| 153 | STORM MH | 7.38' | -2.62' - N<br>-2.62' - S<br>0.78' - W | 24" CONCRETE<br>24" CONCRETE<br>8" CONCRETE |
| 154 | STORM INLET | 7.49' | 2.69' - SW | 8" CONCRETE |
| 155 | STORM MH | 9.07' | -2.53' - N<br>2.27' - NE<br>-5.40' - E<br>-2.53' - S<br>1.37' - NW | 18" CONCRETE<br>8" CONCRETE<br>12" CONCRETE<br>24" CONCRETE<br>8" CLAY |
| 156 | STORM INLET | 8.34' | 3.14' - SW | 8" CONCRETE |
| 157 | STORM MH | 8.73' | 1.43' - E<br>-0.97' - E<br>-0.97' - W | 12" IRON<br>12" CONCRETE<br>12" CONCRETE |

| SANITARY/STORM STRUCTURES | | | | |
|---|---|---|---|---|
| STRUCTURE NO. | STRUCTURE TYPE | RIM | INVERT ELEV./ DIRECTION | PIPE SIZE/ MATERIAL |
| 158 | STORM MH | 9.76' | -2.43' - N<br>-1.83' - E<br>-2.43' - S | 18" CONCRETE<br>12" CONCRETE<br>18" CONCRETE |
| 159 | SANITARY MH | 9.76' | -0.34' - N<br>0.06' - E<br>-0.44' - S<br>-0.54' - W | 12" CONCRETE<br>8" CONCRETE<br>12" CONCRETE<br>12" CONCRETE |
| 160 | SANITARY MH | 9.96' | -0.24' - N<br>-0.04' - E<br>-0.24' - S | 12" CONCRETE<br>8" CONCRETE<br>12" CONCRETE |
| 161 | STORM MH | 9.41' | -9.89' - E<br>-9.99' - W<br>-2.29' - W<br>-2.29' - NW | 36" CONCRETE<br>36" CONCRETE<br>12" CONCRETE<br>12" CONCRETE |
| 162 | STORM MH | 9.08' | -0.52' - E<br>-0.22' - SW | 12" CONCRETE<br>12" CONCRETE |
| 163 | STORM INLET | 8.88' | FILLED WITH DIRT AND DEBRIS | |
| 164 | STORM MH | 9.04' | 2.04' - N<br>-0.66' - E<br>2.94' - W<br>-0.66' - W<br>3.34' - NW | 15" PVC<br>12" CONCRETE<br>8" PVC<br>12" CONCRETE<br>8" PVC |

| SANITARY/STORM STRUCTURES | | | | |
|---|---|---|---|---|
| STRUCTURE NO. | STRUCTURE TYPE | RIM | INVERT ELEV./ DIRECTION | PIPE SIZE/ MATERIAL |
| 200 | STORM INLET | 4.79' | FILLED WITH DIRT AND DEBRIS | |
| 201 | STORM MH | 6.41' | 0.71 - E | 8" CONCRETE |
| 202 | STORM MH | 8.81' | -1.71' - SE<br>4.41' - NW | 8" CLAY<br>8" IRON |
| 203 | STORM INLET | 8.66' | 4.96' - SE | 8" IRON |
| 204 | STORM INLET | 9.14' | 5.14' | 8" UNKNOWN |
| 205 | STORM MH | 9.52' | 2.92' - N<br>2.62' - N<br>4.52' - SE<br>3.52' - S<br>-0.68' - W | 8" PVC<br>8" PVC<br>8" PVC<br>8" PVC<br>15" CONCRETE |
| 206 | STORM INLET | 8.81' | 3.01' - S | 8" UNKNOWN |
| 207 | STORM MH | 9.18' | -0.32' - N<br>-0.62' - E<br>-0.12' - S<br>-0.92' - W<br>-0.42' - NW | 8" PVC<br>15" CONCRETE<br>8" PVC<br>15" CONCRETE<br>8" PVC |

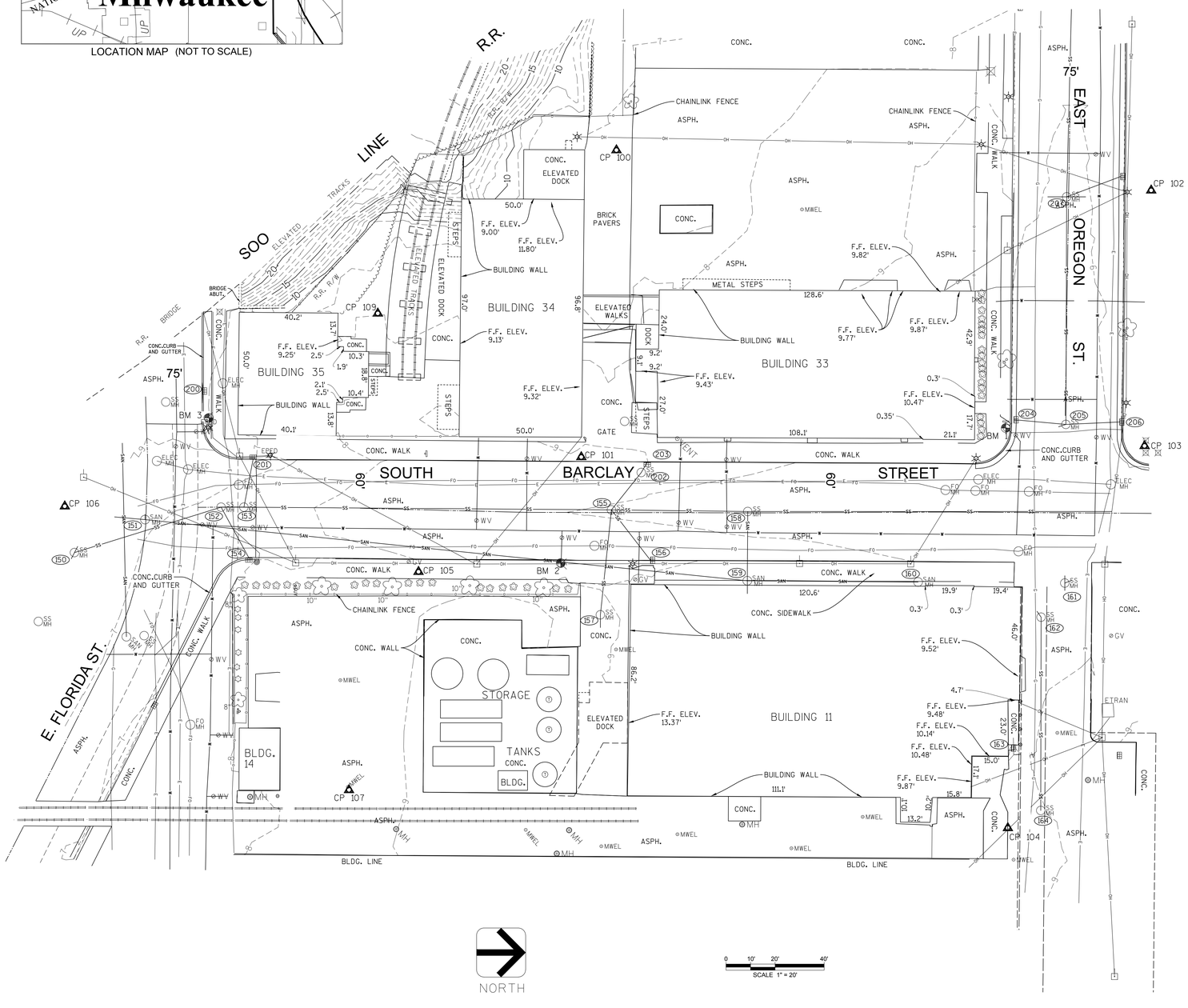


C0.00

| DES BY | BOOK NO 761 & 762 |
|---|---|
| DR BY CRB | PROJ NO 27-1005.00 |
| CHK BY JLR | DATE 3/10/2017 |

| NO | DATE | REVISION | NO | DATE | REVISION |
|---|---|---|---|---|---|
| | | | | | |

PPG Apartments

AYRES ASSOCIATES
Madison, WI

Topographic Survey
PPG Apartments, Milwaukee, WI

SHEET NO
1 of 1

wisdot-gshade.stb
3/10/2017
V:\Surveys\MD\27-1005.00 PPG Milwaukee Apartments\CADD\27-1005.00 PPG TOPO Map Sheets.dwg

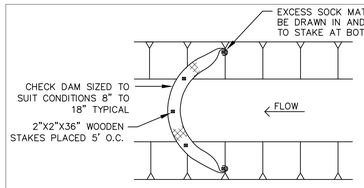


NOTES:
1. SEDIMENT SHOULD BE REMOVED FROM BEHIND CHECK DAM ONCE THE ACCUMULATED HEIGHT HAS REACHED ½ THE HEIGHT OF THE CHECK DAM.
2. CHECK DAM CAN BE DIRECT SEEDED AT THE TIME OF INSTALLATION.

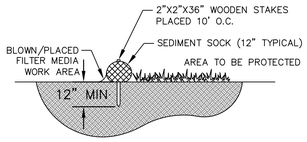


SECTION

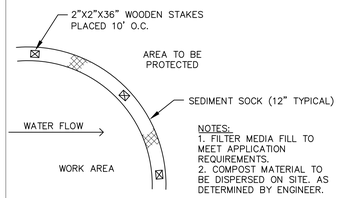


NOTES:
1. FILTER MEDIA FILL TO MEET APPLICATION REQUIREMENTS.
2. COMPOST MATERIAL TO BE DISPERSED ON SITE, AS DETERMINED BY ENGINEER.

PLAN

1 / C110 SEDIMENT SOCK

SCALE: NTS

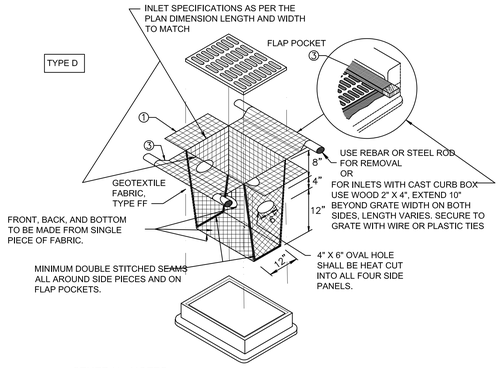


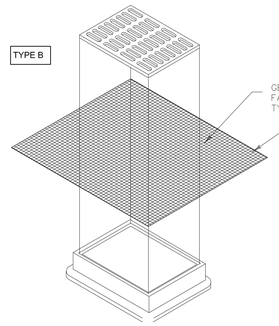


GENERAL NOTES:

INLET PROTECTION DEVICES SHALL BE MAINTAINED OR REPLACED AT THE DIRECTION OF THE ENGINEER.

WHEN REMOVING OR MAINTAINING INLET PROTECTION, CARE SHALL BE TAKEN SO THAT THE SEDIMENT TRAPPED ON THE GEOTEXTILE FABRIC DOES NOT FALL INTO THE INLET. ANY MATERIAL FALLING INTO THE INLET SHALL BE REMOVED IMMEDIATELY

1. FINISHED SIZE, INCLUDING FLAP POCKETS WHERE REQUIRED, SHALL EXTEND A MINIMUM OF 10" AROUND THE PERIMETER TO FACILITATE MAINTENANCE OR REMOVAL
2. FOR INSTALLATION WITH CURB BOX, AN ADDITIONAL 18" OF FABRIC IS WRAPPED AROUND THE WOOD AND SECURED WITH STAPLES. THE WOOD SHALL NOT BLOCK THE ENTIRE HEIGHT OF THE CURB BOX OPENING.
3. FLAP POCKETS SHALL BE LARGE ENOUGH TO ACCEPT WOOD 2x4.

CONSTRUCT PER WDNR TECHNICAL STANDARD 1060.

GENERAL NOTES:

CONSTRUCT PER WDNR TECHNICAL STANDARD 1060

INLET PROTECTION DEVICES SHALL BE MAINTAINED OR REPLACED AT THE DIRECTION OF THE ENGINEER.

WHEN REMOVING OR MAINTAINING INLET PROTECTION, CARE SHALL BE TAKEN SO THAT THE SEDIMENT TRAPPED ON THE GEOTEXTILE FABRIC DOES NOT FALL INTO THE INLET. ANY MATERIAL FALLING INTO THE INLET SHALL BE REMOVED IMMEDIATELY

1. FINISHED SIZE, INCLUDING FLAP POCKETS WHERE REQUIRED, SHALL EXTEND A MINIMUM OF 10" AROUND THE PERIMETER TO FACILITATE MAINTENANCE OR REMOVAL

NOTE:
INLET PROTECTION TYPE D SHALL BE INSTALLED ON ALL INLETS GREATER THAN 30" DEEP. USE INLET PROTECTION TYPE B ON SHALLOWER INLETS.

2 / C110 INLET PROTECTION TYPE B & D

SCALE: NTS

EROSION NOTES:

A. ANY PROPOSED CHANGES TO THE EROSION CONTROL PLAN MUST BE SUBMITTED TO THE CITY FOR APPROVAL AND INDICATED ON THE PLAN.
B. INSTALL WISDOT TYPE B OR D (AS APPLICABLE) INLET PROTECTION AT ALL INLETS SHOWN ON THE PLANS. IF OTHER INLETS ARE FOUND WITHIN THE DRAINAGE AREA. THE CONTRACTOR SHALL PLACE INLET PROTECTION.
C. A TRACKING PAD WILL NOT BE REQUIRED FOR THIS CONSTRUCTION
D. CONSTRUCTION ACCESS TO THE SITE WILL ONLY BE FROM BARCLAY AVENUE. CONTRACTOR SHALL ENSURE THAT ACCESS TO THE SITE AND BARCLAY AVENUE ARE CLEANED UP FROM DIRT AND TRACKED MUD AT THE END OF EACH DAY.
E. CONTRACTOR SHALL POST A COPY OF THE COVERAGE UNDER WPDES GENERAL PERMIT APPROVAL AT A CONSPICUOUS LOCATION ON THE PROJECT SITE FOR AT LEAST FIVE DAYS PRIOR TO CONSTRUCTION, AND REMAINING AT LEAST FIVE DAYS AFTER CONSTRUCTION. CONTRACTOR MUST ALSO HAVE A COPY OF THE PERMIT AND APPROVED PLAN AVAILABLE AT THE PROJECT SITE AT ALL TIMES UNTIL THE PROJECT IS COMPLETE.
F. CONTRACTOR SHALL EMPLOY EROSION CONTROL METHODS AS SHOWN AND SPECIFIED IN THE WISCONSIN DEPARTMENT OF NATURAL RESOURCES CONSTRUCTION SITE TECHNICAL STANDARDS AND THE WISDOT EROSION CONTROL PRODUCT ACCEPTABILITY LISTS (PAL).
G. ALL EROSION CONTROL MEASURES SHALL BE ADJUSTED TO MEET FIELD CONDITIONS AT THE TIME OF CONSTRUCTION AND SHALL BE INSTALLED PRIOR TO ANY GRADING OR DISTURBANCE OF EXISTING SURFACE MATERIAL ON THE SITE.
H. ALL EROSION AND SEDIMENT CONTROL MEASURES WILL BE CHECKED FOR STABILITY AND OPERATION AFTER A RAINFALL OF 0.5 INCHES OR MORE BUT NOT LESS THAN ONCE EVERY WEEK. ANY NEEDED REPAIRS WILL BE MADE IMMEDIATELY. WRITTEN REPORTS WILL BE KEPT OF ALL EROSION AND SEDIMENT CONTROL INSPECTIONS AS REQUIRED BY THE WISCONSIN DEPARTMENT OF NATURAL RESOURCES (WDNR).
I. SILT FENCE/SEDIMENT SOCK SHALL BE INSTALLED IN THE LOCATIONS SHOWN ON THE CONSTRUCTION PLANS PER DETAILS. SEDIMENT DEPOSITS WILL BE REMOVED FROM BEHIND THE SILT FENCE/SEDIMENT SOCK WHEN DEPOSITS REACH A DEPTH OF 6 INCHES. THE SILT FENCE/SEDIMENT SOCK WILL BE REPAIRED OR REPLACED AS NECESSARY TO MAINTAIN A BARRIER.
J. EROSION CONTROL MEASURES MUST BE IN PLACE AT THE END OF EACH WORK DAY.
K. ALL OFF-SITE SEDIMENT DEPOSITS OCCURRING AS A RESULT OF CONSTRUCTION WORK OR A STORM EVENT SHALL BE CLEANED UP BY THE END OF EACH DAY. FLUSHING SHALL NOT BE ALLOWED.
L. WHERE CONSTRUCTION ACTIVITIES HAVE PERMANENTLY CEASED OR HAVE BEEN TEMPORARILY SUSPENDED FOR MORE THAN SEVEN DAYS, OR WHEN FINAL GRADES ARE REACHED IN ANY PORTION OF THE SITE, STABILIZATION SHALL BE IMPLEMENTED WITHIN SEVEN DAYS. TEMPORARY STABILIZATION PRACTICES SUCH AS MULCH/TACKIFIER, EROSION MAT, OR WISDOT TYPE B SOIL STABILIZER SHALL BE APPLIED TO THE SOIL SURFACE WHEN THE SITE IS NOT READY FOR PERMANENT RESTORATION. WHEN STABILIZATION IS NOT POSSIBLE DUE TO SNOW COVER, STABILIZATION MEASURES SHALL BE INITIATED AS SOON AS POSSIBLE. THE CONTRACTOR SHALL USE CLASS I URBAN TYPE B EROSION MATTING ON ALL SWALE CENTERLINES AND SIDE SLOPES STEEPER THAN 4:1 (25%)
M. STORM WATER AND GROUND WATER PUMPED FROM EXCAVATIONS AND/OR DEWATERING WELLS SHALL BE DISPOSED OF IN ACCORDANCE WITH THE WISCONSIN STATUTES. SEDIMENT BASINS, SEDIMENT TRAPS AND/OR THE USE OF POLYMERS TO CONTROL SEDIMENT SHALL BE UTILIZED AND MEET THE REQUIREMENTS OF THE WISCONSIN WDNR TECHNICAL STANDARDS.
N. ALL TEMPORARY EROSION AND SEDIMENT CONTROL MEASURES SHALL BE REMOVED WITHIN 30 DAYS AFTER FINAL SITE STABILIZATION IS ACHIEVED OR AFTER THE TEMPORARY MEASURES ARE NO LONGER NEEDED.
O. THIS PLAN SHOWS NEW FINISHED GRADES. FOR ALL PAVEMENT AREAS, SUBTRACT THICKNESS OF PAVEMENT AND BASE COURSE SPECIFIED.
P. ALL DIMENSIONS SHOWN ARE TO DECIMAL FEET AND MEASURED TO EDGE OF PAVEMENT, UNLESS SPECIFIED OTHERWISE. PRIOR TO START OF CONSTRUCTION, THE CONTRACTOR SHALL FIELD VERIFY ALL DIMENSIONS AND REPORT ANY DISCREPANCIES TO THE OWNERS REPRESENTATIVE.
Q. CONTRACTOR TO PROVIDE UPDATED CONSTRUCTION SCHEDULE ON BI-WEEKLY BASIS.
R. PROVIDE TRAFFIC CONTROL DURING CONSTRUCTION AS REQUIRED TO MAINTAIN SAFE CONDITIONS FOR WORKERS AND THE PUBLIC.
S. CONTRACTOR TO INSTALL AND USE CONCRETE WASH-OUT AREAS AS NEEDED IN AREAS DESIGNATED ON THE PLAN
T. IF DEWATERING IS NECESSARY, MAXIMUM OUTPUT MAY NOT EXCEED 70 GPM WITHOUT A PERMIT.

*SEEDING AND STABILIZATION INFORMATION & DEADLINES ARE AS FOLLOWS:
-CONTRACTOR TO USE WISDOT MIX #40 AT A RATE OF 3.0 LBS/1000 SF
-CONTRACTOR TO USE ANNUAL SEEDING AT A RATE OF 2.0 LBS/1000 SF
-CONTRACTOR TO APPLY FERTILIZER AT A RATE OF 2 LBS/1000 SF
AFTER SEPTEMBER 15TH, A COOL WEATHER SEEDING COVER CROP MUST BE APPLIED (I.E. OATS)
AFTER OCTOBER 15TH, A DORMANT SEEDING COVER CROP MUST BE APPLIED
(I.E. WINTER WHEAT)
AFTER NOVEMBER 15TH, A DORMANT SEEDING MUST BE APPLIED WITH AN ACCEPTABLE SOIL STABILIZER. (POLYACRYLIMIDE)

DIGGERS HOTLINE
Toll Free (800) 242-8511
Milwaukee Area (414) 259-1181
Hearing Impaired TDD (800) 542-2289
www.DiggersHotline.com

N
0 10' 20'

LEGEND

- SILT SOCK
- REMOVE PAVEMENT ONLY
- REMOVE PAVEMENT & BASE
- CLEAR AND GRUB AREA
- REMOVE ELEMENT
- REMOVE FENCE/CURB
- SAW CUT PAVEMENT
- INLET PROTECTION

NOTES:

1. CONTRACTOR SHALL CONTACT DIGGERS HOTLINE, APPROPRIATE UTILITY COMPANIES AND CITY DEPARTMENTS A MINIMUM OF THREE (3) DAYS PRIOR TO THE START OF ANY CONSTRUCTION TO FIELD VERIFY UTILITIES.
2. CONTRACTOR SHALL TAKE CARE NOT TO DAMAGE TREES THAT ARE TO REMAIN. CONTRACTOR SHALL KEEP HEAVY EQUIPMENT A MINIMUM OF 15 FEET AWAY FROM ALL TREES UNLESS CONSTRUCTION DICTATES A CLOSER PROXIMITY.
3. CONTRACTOR TO PROPOSE LOCATION OF SITE TRAILER, STAGING, AND PARKING TO PROJECT ENGINEER PRIOR TO LOCATION OF ITEMS IN THE FIELD.
4. EXISTING COMBINED SEWERS RUN THROUGH THE SITE. COORDINATE CONSTRUCTION ACTIVITIES WITH THE CITY OF MILWAUKEE.
5. CONTRACTOR WILL PROTECT ALL MONITORING WELLS LOCATED IN OR AROUND THE SITE.

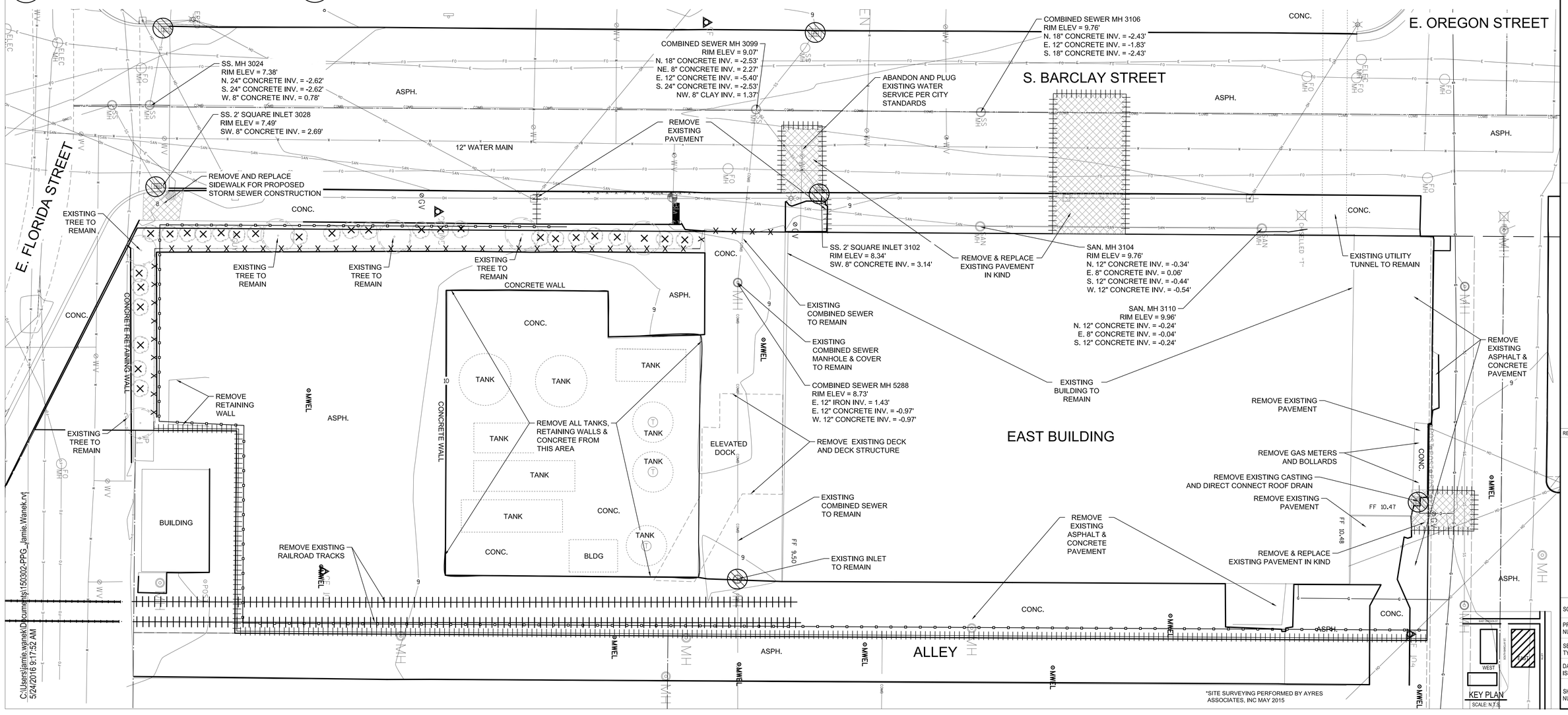


C:\Users\jamie.wanek\Documents\150302-PPG_Jamie.Wanek.rvt
5/24/2016 9:17:52 AM


CONTINUUM
ARCHITECTS + PLANNERS, S.C.
P.O. BOX 092663
MILWAUKEE, WI 53203
T 414.220.9640
F 414.220.9595

CONSULTANTS:

Spire Engineering, Inc.
130 W. Bruce St, Suite 420
Milwaukee, WI 53204
(414) 278-6200
SE Project #: 13021

AYRES ASSOCIATES
Ayres-SAA Design Group
101 East Badger Road
Madison, WI 53719
Office (608)215-0900

THE MATRIX GROUP
ENGINEERING CONSULTANTS
311 EAST CHICAGO STREET, SUITE 310, MILWAUKEE, WI 53202
PHONE: (414) 329-2827 FAX: (414) 329-2820


COPYRIGHT 2016, CONTINUUM ARCHITECTS + PLANNERS S.C.

THE BARCLAY - BUILDING 11
301 S. BARCLAY AVE., MILWAUKEE, WI 53204

SHEET TITLE: EXISTING CONDITIONS, SITE DEMOLITION & EROSION CONTROL PLAN

REVISIONS:

| | |
|---|---|
| SCALE | VARIES |
| PROJECT NUMBER | 150302 |
| SET TYPE | PLAN EXAMINATION |
| DATE ISSUED | 03/03/2017 |
| SHEET NUMBER | C110 |

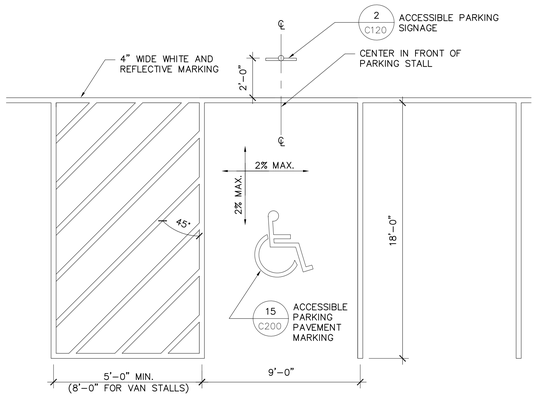


1 C120 ACCESSIBLE PARKING NTS

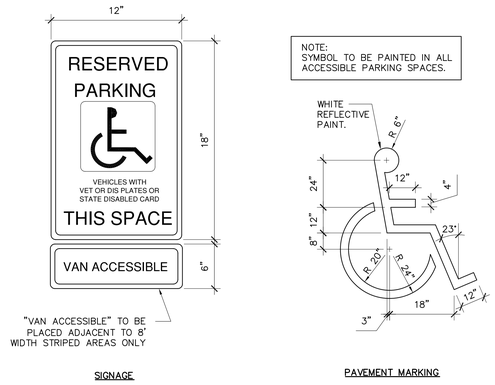


2 C120 ACCESSIBLE PARKING SIGNAGE AND PAVEMENT MARKING NTS

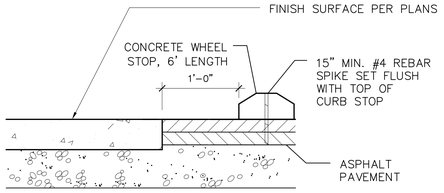


NOTE:

1. CENTER WHEEL STOP IN PARKING SPACE WIDTH

3 C120 WHEEL STOP NTS

## LEGEND

- CONCRETE
- PAVERS (SEE LANDSCAPE PLAN)
- PLANTING AREAS (SEE LANDSCAPE PLAN)
- EX. WATER MAIN
- EX. FIBER OPTIC
- EX. ELECTRICAL SERVICE
- EX. GAS SERVICE
- EX. STORM SEWER
- EX. OVERHEAD ELECTRIC

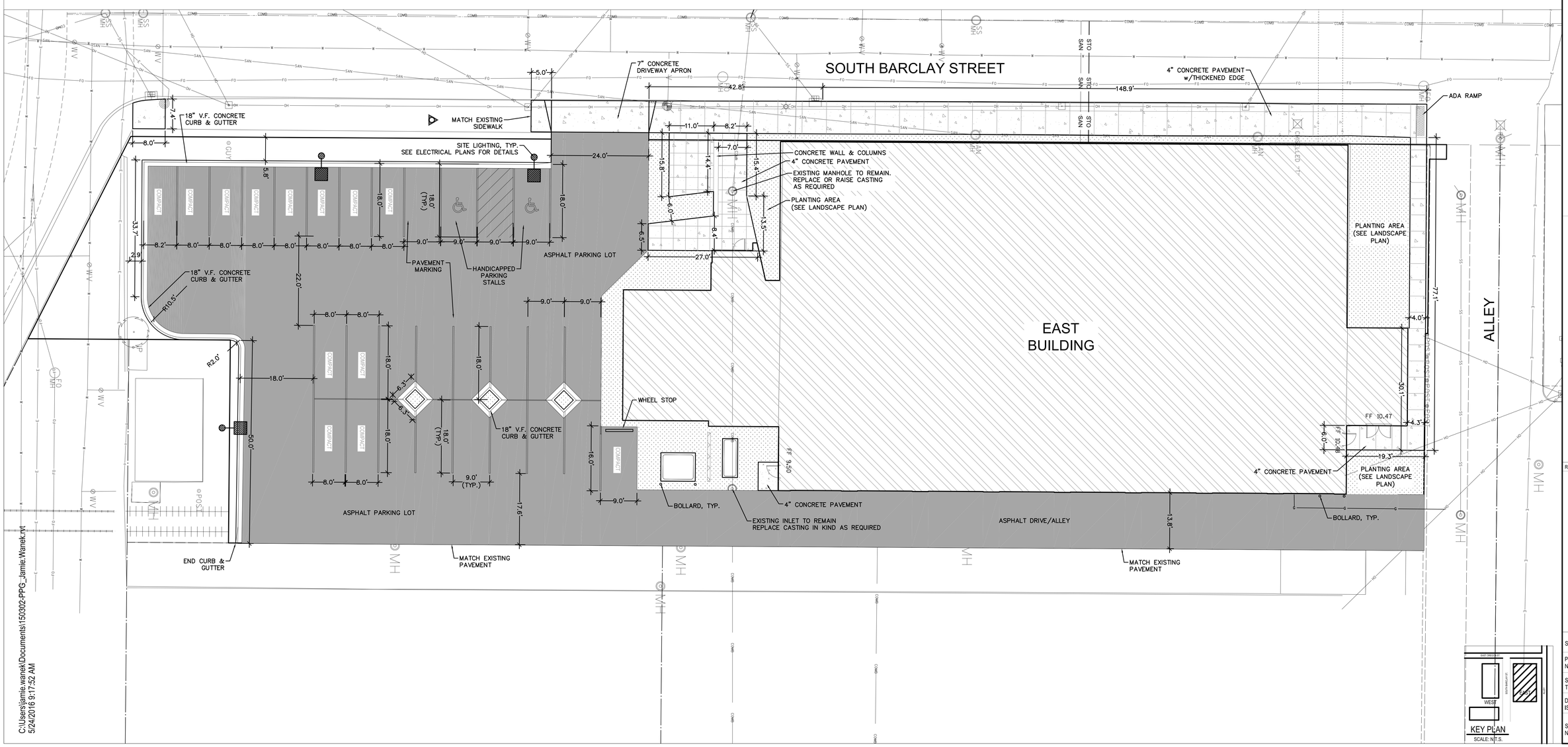


KEY PLAN
SCALE: N.T.S.

C:\Users\jamie.wanek\Documents\150302-PPG_Jamie.Wanek.rvt
5/24/2016 9:17:52 AM


DIGGERS HOTLINE
Toll Free (800) 242-8511
Milwaukee Area (414) 259-1181
Hearing Impaired TDD (800) 542-2289
www.DiggersHotline.com

CONTINUUM ARCHITECTS + PLANNERS, S.C.
P. O. BOX 510663
MILWAUKEE, WI 53203
T 414.270.9640
F 414.270.9595


COPYRIGHT 2016, CONTINUUM ARCHITECTS + PLANNERS S.C.

CONSULTANTS:


Spire Engineering, Inc.
130 W. Bruce St, Suite 420
Milwaukee, WI 53204
(414) 278-9200
SE Project #: 13021

AYRES ASSOCIATES
Ayres&AA Design Group
101 East Badger Road
Madison, WI 53719
Office (608)255-0800

THE MATRIX GROUP
ENGINEERING CONSULTANTS
311 EAST CHICAGO STREET, SUITE 310, MILWAUKEE, WI 53202
PHONE: (414) 329-2827 FAX: (414) 329-2820


THE BARCLAY - BUILDING 11
301 S. BARCLAY AVE., MILWAUKEE, WI 53204

SHEET TITLE: SITE PLAN

REVISIONS:

| | |
|---|---|
| SCALE | VARIES |
| PROJECT NUMBER | 150302 |
| SET TYPE | PLAN EXAMINATION |
| DATE ISSUED | 03/03/2017 |
| SHEET NUMBER | C 120 |

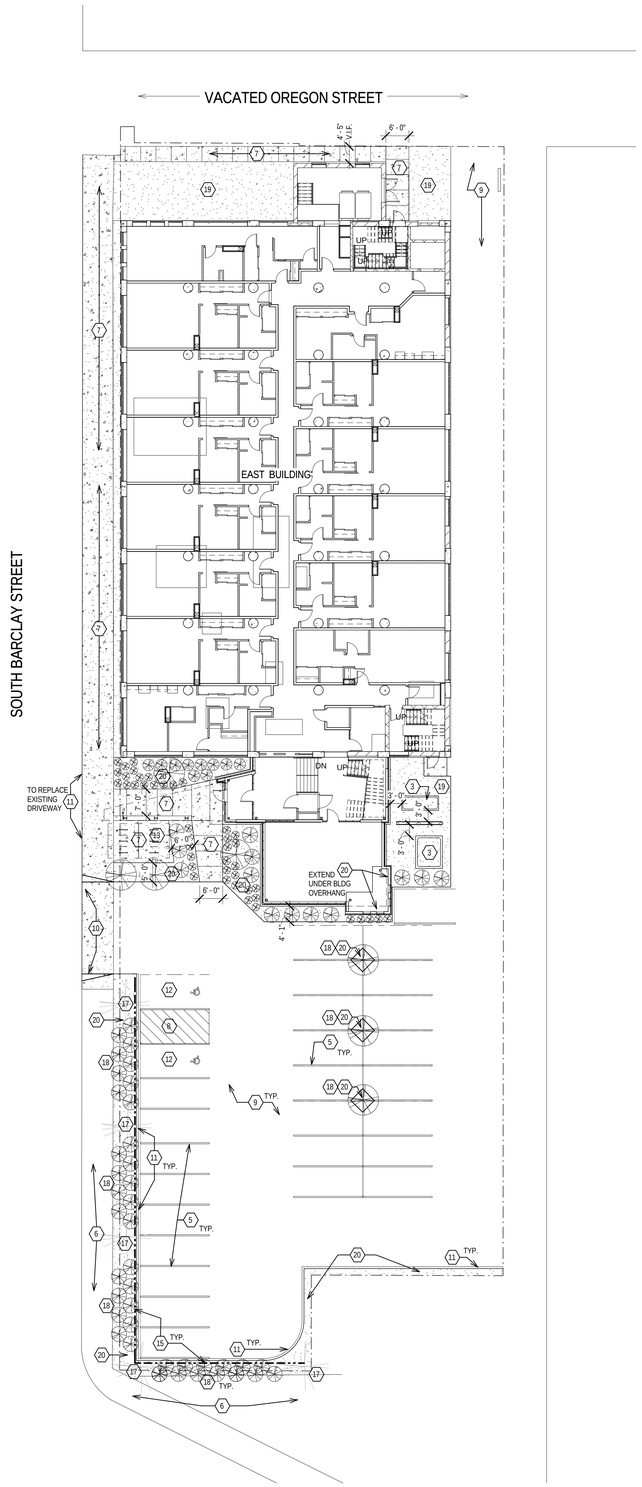


1 NEW WORK PLAN - SITE PLAN - EAST BUILDING
Scale: 1/16" = 1'-0"
0' 4' 8' 16' 24'

## SITE PLAN KEYNOTES

ALL KEY NOTES MAY NOT BE USED ON ALL SHEETS

1. NOT USED
2. EXISTING CONCRETE LOADING DOCK TO REMAIN
3. ELECTRICAL TRANSFORMER AND GENERATOR W/ CONC. PADS. PROVIDE EVERGREEN SHRUBS ALL AROUND. COORDINATE WITH ELECTRICAL ENGINEER AND WE ENERGIES.
4. LANDSCAPE PATIO WITH PAVERS AND SITE FURNITURE, TYP. SUBMIT CUT SHEETS FOR DESIGN PER ALLOWANCE
5. PARKING STALLS WITH STRIPING, TYP. SEE CIVIL DRAWINGS FOR DIMENSIONS AND DETAILS.
6. EXISTING CITY SIDEWALK TO REMAIN, TYP. CUT AND DEMO AS REQUIRED FOR NEW CONSTRUCTION. PATCH SIDEWALK DAMAGED DURING CONSTRUCTION PER CITY STANDARDS.
7. NEW SIDEWALK. SEE CIVIL DRAWINGS.
8. PEDESTRIAN STRIPING, TYP. SEE CIVIL FOR ADDITIONAL INFO.
9. NEW ASPHALT PAVING, TYP. SEE CIVIL DRAWINGS
10. NEW CONC. CURB CUT, SEE CIVIL DRAWINGS
11. NEW CONC. CURB & GUTTER, SEE CIVIL DRAWINGS
12. HANDICAP PARKING STALL. PROVIDE REQUIRED SIGNAGE PER CODE AT ALL STALLS INCLUDING VAN ACCESSIBLE (SEE CIVIL DWGS)
13. BIKE RACK. SUBMIT CUT SHEETS FOR DESIGN PER ALLOWANCE
14. EXISTING CONCRETE STRUCTURAL SUPPORTS FOR RAILROAD SPUR TO REMAIN TYP. PAINT.
15. NEW PRE-FINISHED METAL PICKET FENCE, TYP.
16. EXISTING STEEL FRAME STRUCTURE TO REMAIN.
17. EXISTING TREE TO REMAIN
18. PER MILWAUKEE ZONING REGULATIONS PROVIDE THE FOLLOWING MINIMUM:
    1. 1 DECIDUOUS TREE PER 25'
    2. 2 STAGGERED ROWS WITH SHRUBS, MAX. OF 4' O.C. EACH ROW
    3. SHRUB SIZE: 2' DIAMETER AT PLANTING, 2' HIGH AT PLANTING, 3.5' HIGH AT MATURITY
    4. INTERIOR LOT: (2 EA.)TREES & SHRUBS / 8 SPACES= (6 EA.)
    5. 5% OF LOT AREA SHOULD BE LANDSCAPED (10,800 SF, MIN. 550SF LANDSCAPING REQUIRED)
    6. PROVIDE 3'-0" HIGH DECORATIVE METAL FENCE
    7. REFER TO MILWAUKEE ZONING CODE 295-405 FOR ADDITIONAL REQUIREMENTS.
19. NEW LANDSCAPE AREA OF GRASS, WITH MINIMUM OF 6" OF TOPSOIL, TYPICAL
20. NEW LANDSCAPE AREA OF MULCH BED WITH MINIUM OF 12" TOPSOIL, AND 4" OF WOOD MULCH, TYPICAL
21. FUTURE STAIR UP TO EXISTING RAILWAY SPUR

## SITE PLAN KEY

GENERAL NOTES:

1. SUBMIT LANDSCAPE PLAN TO ARCHITECT FOR REVIEW
2. PROVIDE NATIVE LANDSCAPE PLANTING
3. PROVIDE GRASS THAT USES LESS WATER SUCH AS BLUE GAMMA, FESCUE, OR 'NO MOW'
4. PROVIDE MULCH IN ALL AREAS LANDSCAPED WITH SHRUBS AND TREES.
5. EXISTING SOILS HAVE BEEN DETERMINED TO BE HAZARDOUS PER THE ENVIRONMENTAL REPORT AND WILL NEED TO BE ENCAPSULATED OR REMOVED. ANY SOIL THAT IS REMOVED FROM SITE WILL NEED TO BE DISPOSED OFF IN AN APPROPRIATE MANNER. ANY EXISTING UNENCAPSULATED SOIL THAT WILL BE EXPOSED WILL NEED REMEDIAL ACTION. SEE ENVIRONMENTAL REPORT FOR REQUIREMENTS RELATED TO ENCAPSULATION, REMEDIAL ACTION AND DISPOSAL.

- SHRUBS AND LANDSCAPED AREA
- EXISTING TREE
- ORNAMENTAL TREE
- GRASS
- PAVERS
- ASPHALT PAVING
- CONCRETE WALKWAY

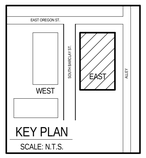


KEY PLAN
SCALE: N.T.S.

CONTINUUM
ARCHITECTS + PLANNERS, S.C.
P.O. BOX 510663
MILWAUKEE, WI 53203
T 414.390.9640
F 414.220.9595

© COPYRIGHT 2017, CONTINUUM ARCHITECTS + PLANNERS S.C.

CONSULTANTS:

AVRES ASSOCIATES

spire ENGINEERING

THE MATRIX GROUP
ENGINEERING CONSULTANTS
311 EAST CHICAGO STREET, SUITE 310, MILWAUKEE, WI 53202
PHONE: (414) 329-9827 FAX: (414) 329-9820

THE BARCLAY - BUILDING 11
300 S. BARCLAY AVE., MILWAUKEE, WI 53204

SHEET TITLE:
ARCHITECTURAL SITE PLAN - EAST BUILDING

REVISIONS:

| | |
|---|---|
| SCALE | VARIES |
| PROJECT NUMBER | 150302 |
| SET TYPE | PLAN EXAMINATION - RESUBMITTAL |
| DATE ISSUED | 03/03/17 |
| SHEET NUMBER | A1.03 |

C:\Users\heather.pease\Documents\150302-PPG_heather.pease.rvt
3/8/2017 3:27:49 PM

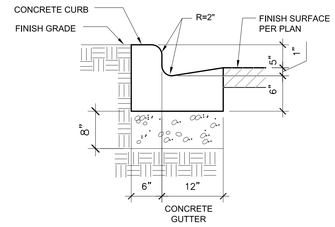


STANDARD CURB

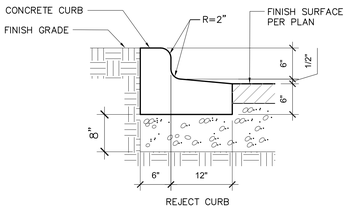


REJECT CURB

1 C130 CONCRETE CURB & GUTTER 18-INCH

SCALE NTS

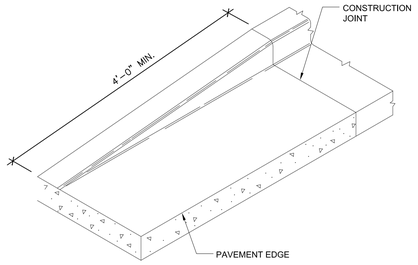


2 C130 CURB TAPER

SCALE: NTS

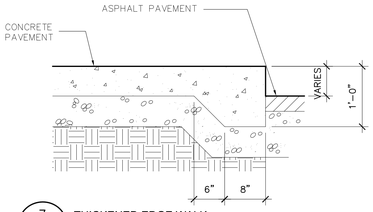


7 C130 THICKENED EDGE WALK

SCALE: NTS

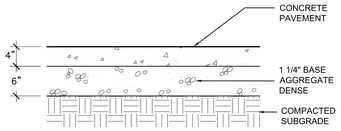


NOTES:
1. STANDARD COLOR CONCRETE
2. MEDIUM BROOM FINISH, PERP. TO DIR. OF TRAVEL
3. PROVIDE EXPANSION JOINTS 30' ALL WAYS, MINIMUM

3 C130 CONCRETE PAVEMENT

NTS

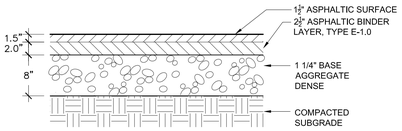


4 C130 ASPHALT PAVEMENT

NTS

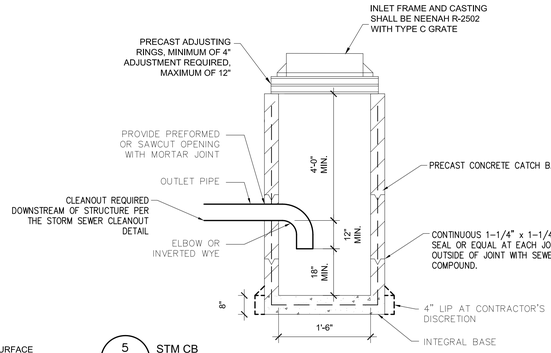


5 C130 STM CB

NTS

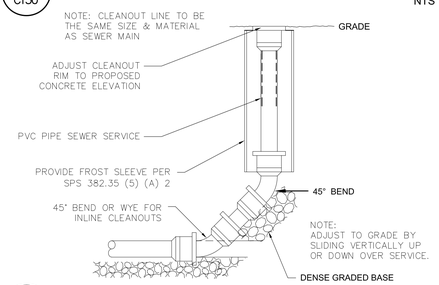


5 C130 STORM CLEANOUT

NTS

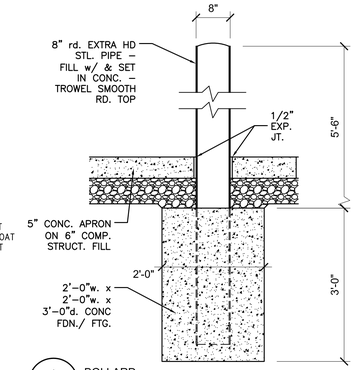


6 C130 BOLLARD

NTS

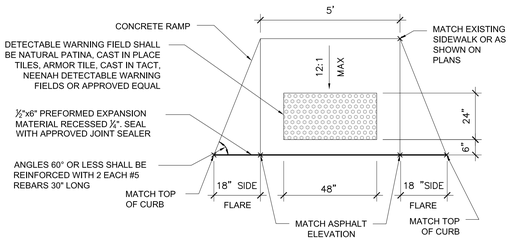


8 C130 ACCESSIBLE RAMP

NTS

DIGGERS HOTLINE

Toll Free (800) 242-8511
Milwaukee Area (414) 259-1181
Hearing Impaired TDD (800) 542-2289
www.DiggersHotline.com

N

0 10' 20'

SPOT ELEVATION ABBREVIATIONS:

(XXX.XX) = EXISTING SURFACE
P = PAVEMENT
C = CONCRETE
EP = EXISTING PAVEMENT
EC = EXISTING CONCRETE
EW = EXISTING SIDEWALK
FS = FINISHED SURFACE
FG = FINISHED GRADE
TS = TOP OF STAIRS
BS = BOTTOM OF STAIRS
TC = TOP OF CURB
TW = TOP OF WALL
BW = BOTTOM OF WALL
IE = INVERT ELEVATION

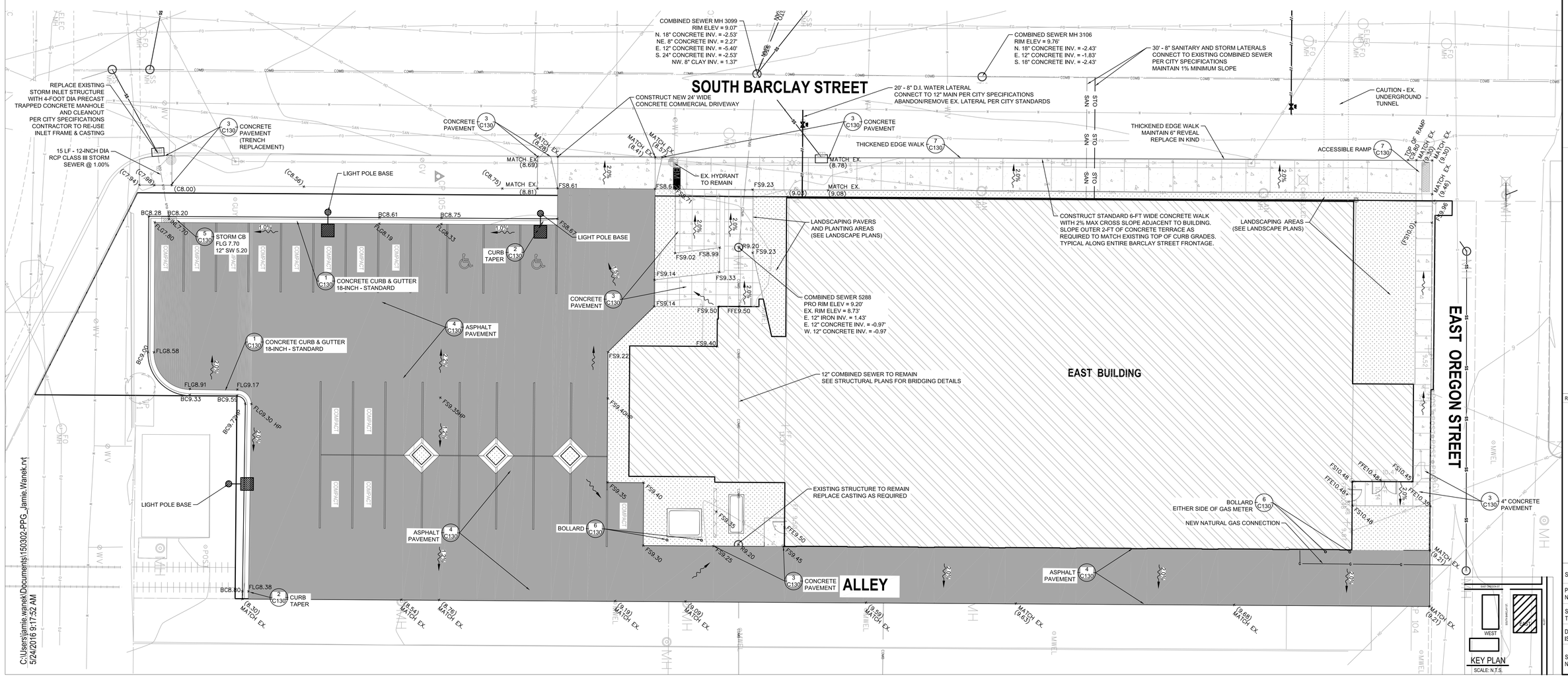





C:\Users\jamie.wanek\Documents\150302-PPG_Jamie.Wanek.rvt
5/24/2016 9:17:52 AM

CONTINUUM
ARCHITECTS + PLANNERS, S.C.
P.O. BOX 170663
MILWAUKEE, WI 53203
T 414.220.9640
F 414.220.9595

CONSULTANTS:

Spire Engineering, Inc.
130 W. Bruce St, Suite 420
Milwaukee, WI 53204
(414) 276-6200
SE Project #: 13021

AYRES ASSOCIATES
Ayres-SAA Design Group
101 East Badger Road
Madison, WI 53719
Office (608)233-0900

THE MATRIX GROUP
ENGINEERING CONSULTANTS
311 EAST CHICAGO STREET, SUITE 310, MILWAUKEE, WI 53202
PHONE: (414) 329-2827 FAX: (414) 329-2820

COPYRIGHT 2016, CONTINUUM ARCHITECTS + PLANNERS S.C.

THE BARCLAY - BUILDING 11

301 S. BARCLAY AVE., MILWAUKEE, WI 53204

SHEET TITLE: SITE GRADING & DRAINAGE PLAN

REVISIONS:

| | |
|---|---|
| SCALE | VARIES |
| PROJECT NUMBER | 150302 |
| SET TYPE | PLAN EXAMINATION |
| DATE ISSUED | 03/03/2017 |
| SHEET NUMBER | C 130 |

# THE BARCLAY - BUILDING 33 & 34

139 E. Oregon St,
MILWAUKEE, WI 53204

03/03/17

## PLAN EXAMINATION - RESUBMITTAL

CAP PROJECT #: 150302

CONTINUUM
ARCHITECTS + PLANNERS, S.C.

ARCHITECTURE - MASTER PLANNING - INTERIOR DESIGN

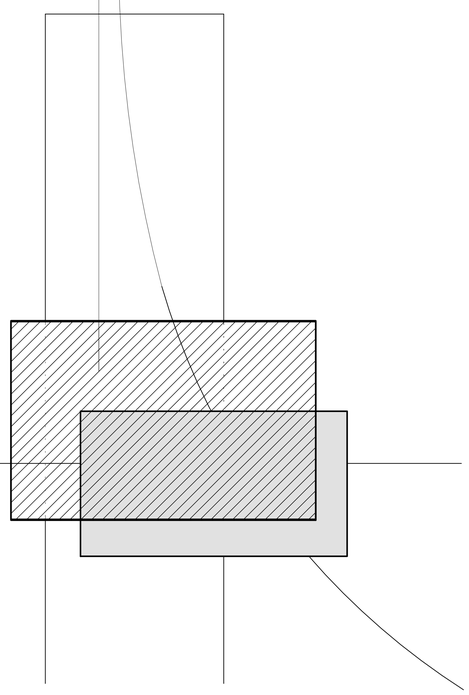


OWNER:
SHERMAN ASSOCIATES, INC
223 PARK AVENUE, SUITE 201
MINNEAPOLIS, MN 55415
TEL. (612) 332-3000
FAX. (612) 332-8119

ARCHITECT:
CONTINUUM ARCHITECTS + PLANNERS, S.C.
228 SOUTH FIRST STREET - SUITE 301
MILWAUKEE, WI 53204
TEL. (414) 220-9640
FAX. (414) 220-9595

GENERAL CONTRACTOR:
GREENFIRE MANAGEMENT SERVICES, LLC
3215 WEST STATE STREET SUITE 300
MILWAUKEE, WI 53208
TEL. (414) 290-9400
FAX. (414) 345-9525

STRUCTURAL ENGINEER:
SPIRE ENGINEERING
130 W. BRUCE STREET - SUITE 420
MILWAUKEE, WI 53204
TEL. (414) 278-9200

CIVIL ENGINEER:
AYRES ASSOCIATES
101 EAST BADGER ROAD
MADISON, WI 53719
TEL. (608) 255-0800

MECHANICAL ENGINEER:
MATRIX GROUP (SCOPE DOCUMENTS ONLY)
311 EAST CHICAGO STREET
MILWAUKEE, WI 5322
TEL. (414) 329-2827

PLUMBING ENGINEER:
MATRIX GROUP (SCOPE DOCUMENTS ONLY)
311 EAST CHICAGO STREET
MILWAUKEE, WI 5322
TEL. (414) 329-2827

FIRE PROTECTION ENGINEER:
MATRIX GROUP
311 EAST CHICAGO STREET
MILWAUKEE, WI 5322
TEL. (414) 329-2827

ELECTRICAL ENGINEER:
MATRIX GROUP (SCOPE DOCUMENTS ONLY)
311 EAST CHICAGO STREET
MILWAUKEE, WI 5322
TEL. (414) 329-2827


WISCONSIN
KATHERINE A. MACDONALD
E - 39030
MADISON, WI
PROFESSIONAL ENGINEER
3-3-17

SHEET INDEX


T2.000 TITLE SHEET - 33 & 34

CIVIL
C0.00 SURVEY
C2.10 EXISTING CONDITIONS, SITE DEMOLITION & EROSION CONTROL PLAN
C2.20 SITE PLAN
C2.30 SITE GRADING & DRAINAGE PLAN

ARCHITECTURAL
A0.01 GENERAL INFORMATION SHEET
A0.02 PARTITION TYPES

A2.01 LIFE SAFETY PLANS - WEST BUILDINGS
A2.02 LIFE SAFETY PLANS - WEST BUILDINGS
A2.03 ARCHITECTURAL SITE PLAN - WEST BUILDINGS
A2.10 DEMOLITION PLANS - WEST BUILDINGS
A2.21 NEW WORK PLAN - BASEMENT & LEVEL 1 - WEST BUILDINGS
A2.22 NEW WORK PLAN - LEVELS 2 & 3 - WEST BUILDINGS
A2.24 NEW WORK PLAN - ROOF LEVEL - WEST BUILDINGS
A2.31 REFLECTED CEILING PLAN - LEVEL 1 - WEST BUILDINGS
A2.32 NEW WORK PLAN - INFILL & PATCH - WEST BUILDING
A2.39 WINDOW TYPES - WEST BUILDING
A2.40 WINDOW TYPES - WEST BUILDINGS
A2.41 WINDOW DETAILS - WEST BUILDINGS
A2.42 EXTERIOR ELEVATIONS - WEST BUILDINGS
A2.43 EXTERIOR ELEVATIONS - WEST BUILDINGS
A2.44 EXTERIOR ELEVATIONS - WEST BUILDINGS
A2.51 EXTERIOR WALL SECTIONS - WEST BUILDINGS
A2.52 EXTERIOR WALL SECTIONS - WEST BUILDINGS
A2.55 EXTERIOR DETAILS - WEST BUILDINGS
A2.56 EXTERIOR DETAILS - WEST BUILDINGS
A2.60 ENLARGED STAIR PLANS - WEST BUILDINGS
A2.61 ENLARGED UNIT PLANS - WEST BUILDINGS
A2.62 ENLARGED UNIT PLANS - WEST BUILDINGS
A2.63 ENLARGED FLOOR PLANS - WEST BUILDINGS
A2.70 INTERIOR ELEVATIONS
A2.71 INTERIOR DETAILS
A2.72 INTERIOR DETAILS
A2.75 STAIR DETAILS
A2.80 DOOR SCHEDULE AND DETAILS
A2.90 ROOM FINISH SCHEDULE

STRUCTURAL
S0.01 STRUCTURAL NOTES AND SCHEDULES
S2.21 FOUNDATION & LEVEL 1 FRAMING PLAN
S2.22 LEVEL 2 & LEVEL 3 FRAMING PLAN
S2.24 ROOF FRAMING PLAN
S3.00 STRUCTURAL DETAILS
S4.00 STRUCTURAL DETAILS
S4.01 STRUCTURAL DETAILS

PLUMBING
P0.01 SYMBOLS, ABBREVIATIONS AND SCHEDULES - PLUMBING
P0.02 DETAILS - PLUMBING
P2.20 BASEMENT LEVEL AND LEVEL 1 - WEST BUILDING - PLUMBING
P2.21 LEVEL 2 AND LEVEL 3 - WEST BUILDING - PLUMBING
P2.22 ROOF LEVEL - WEST BUILDING - PLUMBING
P3.00 ENLARGED UNIT PLANS - WEST BUILDING - PLUMBING
P3.01 ENLARGED UNIT PLANS - WEST BUILDING - PLUMBING

FIRE PROTECTION
FP2.00 FIRE PROTECTION SCOPE SITE PLAN AND DETAILS
FP2.21 FIRE PROTECTION SCOPE FLOOR PLAN - LEVEL 1 - WEST BUILDING
FP2.22 FIRE PROTECTION SCOPE FLOOR PLAN - LEVEL 2 - WEST BUILDING
FP2.23 FIRE PROTECTION SCOPE FLOOR PLAN - LEVEL 3 - WEST BUILDING
FP2.24 FIRE PROTECTION SCOPE FLOOR PLAN - ROOF - WEST BUILDING

MECHANICAL
M2.10 MECHANICAL PLANS - BASEMENT & LEVEL 1 - WEST BUILDING
M2.11 MECHANICAL PLANS - LEVELS 2 & 3 - WEST BUILDING
M2.12 MECHANICAL PLANS - ROOF LEVEL - WEST BUILDING
M2.20 ENLARGED MECHANICAL UNIT PLANS - WEST BUILDING
M2.21 ENLARGED MECHANICAL UNIT PLANS - WEST BUILDING

ELECTRICAL
E2.00 ELECTRICAL SYMBOLS, ABBREVIATIONS, AND DETAILS
E2.01 ELECTRICAL SITE PLAN
E2.21 ELECTRICAL FLOOR PLAN - LEVEL 1 - WEST BUILDING
E2.22 ELECTRICAL FLOOR PLAN - LEVEL 2 - WEST BUILDING
E2.23 ELECTRICAL FLOOR PLAN - LEVEL 3 - WEST BUILDING
E2.24 ELECTRICAL FLOOR PLAN - ROOF - WEST BUILDING
E2.30 ELECTRICAL ENLARGED UNIT PLAN - WEST BUILDING (ZONE 1)
E2.31 ELECTRICAL ENLARGED UNIT PLAN - WEST BUILDING (ZONE 2)
E2.40 ELECTRICAL SERVICE ONE LINE DIAGRAM - WEST BUILDING
E2.41 ELECTRICAL SCHEDULES AND DETAILS


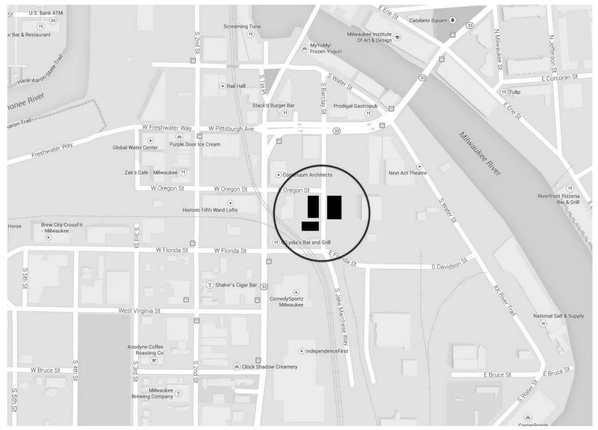


AREA LOCATION MAP
NO SCALE

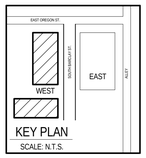


KEY PLAN
SCALE: N.T.S.


CONTINUUM
ARCHITECTS + PLANNERS, S.C.
P.O. BOX 5 0 0 6 3
MILWAUKEE, WI 53203
T 4 1 4 . 3 2 0 . 9 6 4 0
F 4 1 4 . 2 2 0 . 9 5 9 5



© COPYRIGHT 2017, CONTINUUM ARCHITECTS + PLANNERS S.C.


CONSULTANTS:
AYRES ASSOCIATES
spire ENGINEERING
THE MATRIX GROUP ENGINEERING CONSULTANTS
311 EAST CHICAGO STREET, SUITE 310, MILWAUKEE, WI 53202
PHONE: (414) 329-2827 FAX: (414) 329-2820

THE BARCLAY - BUILDING 33 & 34
305 S. BARCLAY ST., MILWAUKEE, WI 53204

SHEET TITLE:
TITLE SHEET - 33 & 34

REVISIONS:

| | |
|---|---|
| SCALE | VARIES |
| PROJECT NUMBER | 150302 |
| SET TYPE | PLAN EXAMINATION - RESUBMITTAL |
| DATE ISSUED | 03/03/17 |
| SHEET NUMBER | T2.000 |

C:\Users\corey.lapworth\Documents\150302-PPG_corey.lapworth.rvt
3/10/2017 2:24:48 PM

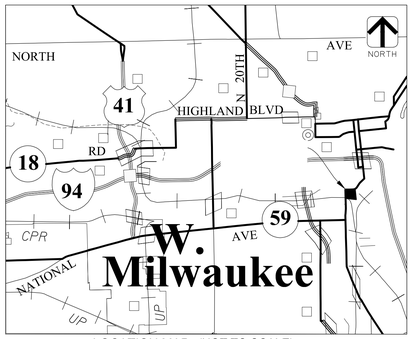


LOCATION MAP (NOT TO SCALE)

| Control Point Table | | | |
|---|---|---|---|
| Point # | Northing | Easting | Description |
| CP 100 | 295642.66' | 605781.71' | MAG NAIL |
| CP 101 | 295628.34' | 605906.80' | MAG NAIL |
| CP 102 | 295860.62' | 605798.12' | 8" SPIKE |
| CP 103 | 295857.93' | 605902.26' | MAG NAIL |
| CP 104 | 295561.21' | 606058.01 | MAG NAIL |
| CP 105 | 295561.99' | 605953.56' | MAG NAIL |
| CP 106 | 295417.81' | 605926.93' | 7" SPIKE |
| CP 107 | 295533.66' | 606042.49' | MAG NAIL |
| CP 106 | 295417.81' | 605926.93' | 7" SPIKE |
| CP 107 | 295533.66' | 606042.49' | MAG NAIL |
| CP 109 | 295545.40' | 605848.26 | 7" SPIKE |

Coordinates are based on the County Coordinate System NAD 83 (2011), Milwaukee County Zone.

| Benchmark Table | | |
|---|---|---|
| BM # | Elevation | Description |
| 1 | 11.52' | SW. UPPER FLANGE BOLT OF HYDRANT |
| 2 | 11.09' | S. UPPER FLANGE BOLT OF HYDRANT |
| 3 | 8.53' | N. UPPER FLANGE BOLT OF HYDRANT |

Elevations based on the City of Milwaukee Vertical Datum.

SURVEY NOTES

1. Publicly owned underground utilities were marked and surveyed as part of this survey and are shown hereon. (Diggers Hotline ticket nos. 201512009039, 20152009055, 20151823072, 20151823224, 20151823207, 20151823193, and 20152009066)

2. Location of underground utilities shown are based on a typical analysis of the location of visible structures, markings set by Diggers Hotline and record plans provided by the City of Milwaukee. Actual underground utility locations and extent are not known and may vary from that shown. Contact Diggers Hotline at least 3 days prior to any excavation.

3. Field work completed May 2015

LEGEND

- BENCHMARK
- CP 1 CONTROL POINT
- LIGHTPOLE
- CONIFEROUS TREE (W/ DIA.)
- DECIDUOUS TREE (W/ DIA.)
- SHRUB
- BUSH
- MH MANHOLE
- STORM/SANITARY STRUCTURE NO.
- PROTECTIVE BOLLARD
- GAS VALVE
- POWER POLE
- HYDRANT
- WV WATER VALVE
- MWEL MONITORING WELL
- W WATER MAIN
- SS STORM SEWER
- SAN SANITARY SEWER
- FO FIBER OPTIC
- G UNDERGROUND GAS LINE
- E UNDERGROUND ELECTRIC
- OH OVERHEAD ELECTRIC
- FOUND CHISELED "X"
- FOUND IRON PIPE

| SANITARY/STORM STRUCTURES | | | | |
|---|---|---|---|---|
| STRUCTURE NO. | STRUCTURE TYPE | RIM | INVERT ELEV./ DIRECTION | PIPE SIZE/ MATERIAL |
| 150 | STORM MH | 6.22' | -4.40' - N<br>-5.00' - NW<br>-5.40' - SE | 24" CONCRETE<br>60" CONCRETE<br>60" CONCRETE |
| 151 | SANITARY MH | 6.83' | -0.70' - N/S<br>-0.30' - W | 18" CONCRETE<br>12" CONCRETE |
| 152 | STORM MH | 7.20' | -2.80' - N<br>0.40' - NE<br>-3.70' - SE | 24" CONCRETE<br>8" CONCRETE<br>24" CONCRETE |
| 153 | STORM MH | 7.38' | -2.62' - N<br>-2.62' - S<br>0.78' - W | 24" CONCRETE<br>24" CONCRETE<br>8" CONCRETE |
| 154 | STORM INLET | 7.49' | 2.69' - SW | 8" CONCRETE |
| 155 | STORM MH | 9.07' | -2.53' - N<br>2.27' - NE<br>-5.40' - E<br>-2.53' - S<br>1.37' - NW | 18" CONCRETE<br>8" CONCRETE<br>12" CONCRETE<br>24" CONCRETE<br>8" CLAY |
| 156 | STORM INLET | 8.34' | 3.14' - SW | 8" CONCRETE |
| 157 | STORM MH | 8.73' | 1.43' - E<br>-0.97' - E<br>-0.97' - W | 12" IRON<br>12" CONCRETE<br>12" CONCRETE |

| SANITARY/STORM STRUCTURES | | | | |
|---|---|---|---|---|
| STRUCTURE NO. | STRUCTURE TYPE | RIM | INVERT ELEV./ DIRECTION | PIPE SIZE/ MATERIAL |
| 158 | STORM MH | 9.76' | -2.43' - N<br>-1.83' - E<br>-2.43' - S | 18" CONCRETE<br>12" CONCRETE<br>18" CONCRETE |
| 159 | SANITARY MH | 9.76' | -0.34' - N<br>0.06' - E<br>-0.44' - S<br>-0.54' - W | 12" CONCRETE<br>8" CONCRETE<br>12" CONCRETE<br>12" CONCRETE |
| 160 | SANITARY MH | 9.96' | -0.24' - N<br>-0.04' - E<br>-0.24' - S | 12" CONCRETE<br>8" CONCRETE<br>12" CONCRETE |
| 161 | STORM MH | 9.41' | -9.89' - E<br>-9.99' - W<br>-2.29' - W<br>-2.29' - NW | 36" CONCRETE<br>36" CONCRETE<br>12" CONCRETE<br>12" CONCRETE |
| 162 | STORM MH | 9.08' | -0.52' - E<br>-0.22' - SW | 12" CONCRETE<br>12" CONCRETE |
| 163 | STORM INLET | 8.88' | FILLED WITH DIRT AND DEBRIS | |
| 164 | STORM MH | 9.04' | 2.04' - N<br>-0.66' - E<br>2.94' - W<br>-0.66' - W<br>3.34' - NW | 15" PVC<br>12" CONCRETE<br>8" PVC<br>12" CONCRETE<br>8" PVC |

| SANITARY/STORM STRUCTURES | | | | |
|---|---|---|---|---|
| STRUCTURE NO. | STRUCTURE TYPE | RIM | INVERT ELEV./ DIRECTION | PIPE SIZE/ MATERIAL |
| 200 | STORM INLET | 4.79' | FILLED WITH DIRT AND DEBRIS | |
| 201 | STORM MH | 6.41' | 0.71 - E | 8" CONCRETE |
| 202 | STORM MH | 8.81' | -1.71' - SE<br>4.41' - NW | 8" CLAY<br>8" IRON |
| 203 | STORM INLET | 8.66' | 4.96' - SE | 8" IRON |
| 204 | STORM INLET | 9.14' | 5.14' | 8" UNKNOWN |
| 205 | STORM MH | 9.52' | 2.92' - N<br>2.62' - N<br>4.52' - SE<br>3.52' - S<br>-0.68' - W | 8" PVC<br>8" PVC<br>8" PVC<br>8" PVC<br>15" CONCRETE |
| 206 | STORM INLET | 8.81' | 3.01' - S | 8" UNKNOWN |
| 207 | STORM MH | 9.18' | -0.32' - N<br>-0.62' - E<br>-0.12' - S<br>-0.92' - W<br>-0.42' - NW | 8" PVC<br>15" CONCRETE<br>8" PVC<br>15" CONCRETE<br>8" PVC |

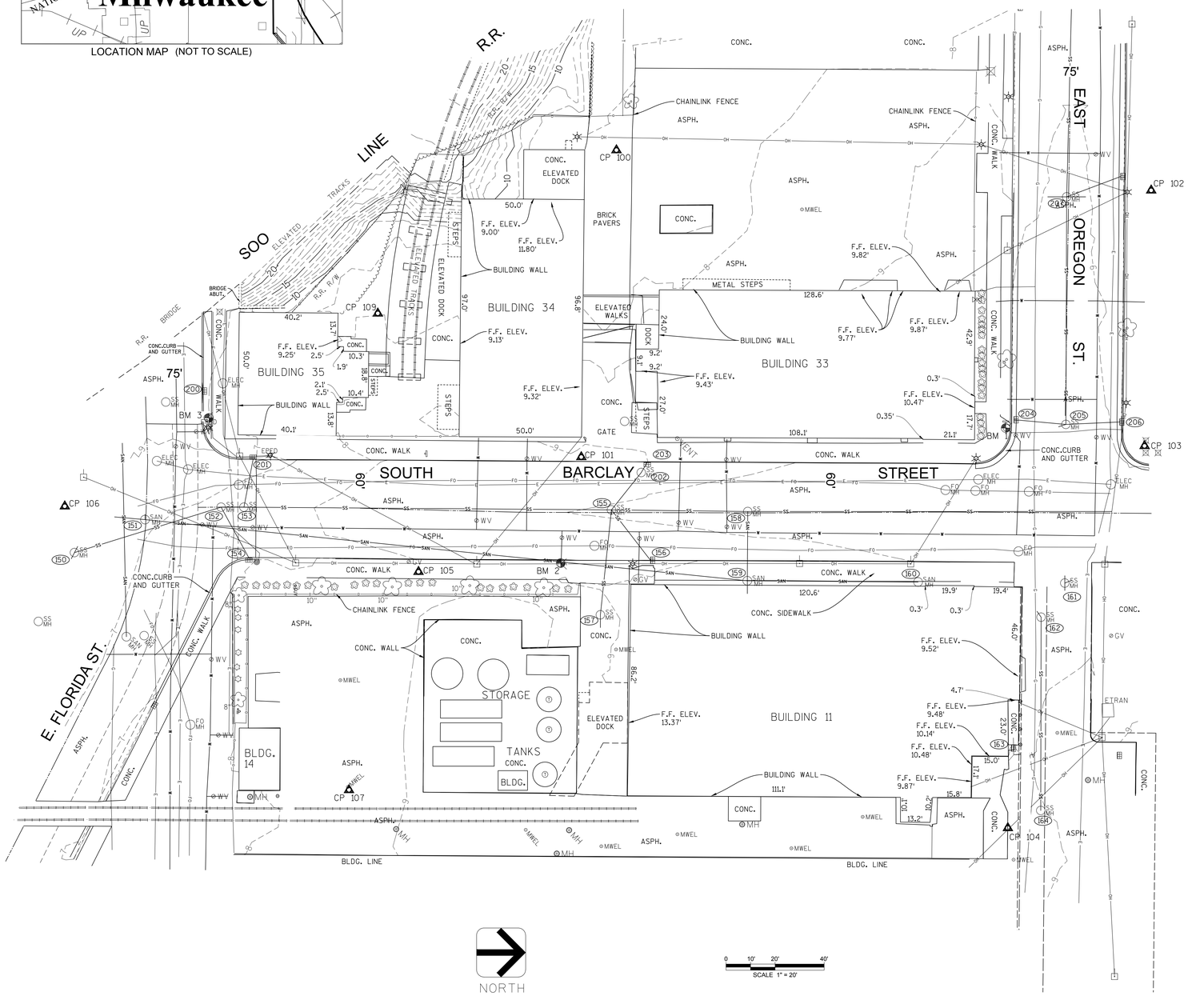


C0.00

| DES BY | BOOK NO 761 & 762 |
|---|---|
| DR BY CRB | PROJ NO 27-1005.00 |
| CHK BY JLR | DATE 3/10/2017 |

| NO | DATE | REVISION | NO | DATE | REVISION |
|---|---|---|---|---|---|
| | | | | | |

PPG Apartments

AYRES ASSOCIATES
Madison, WI

Topographic Survey
PPG Apartments, Milwaukee, WI

SHEET NO
1 of 1

wisdot-gshade.stb
3/10/2017
V:\Surveys\MD\27-1005.00 PPG Milwaukee Apartments\CADD\27-1005.00 PPG TOPO Map Sheets.dwg

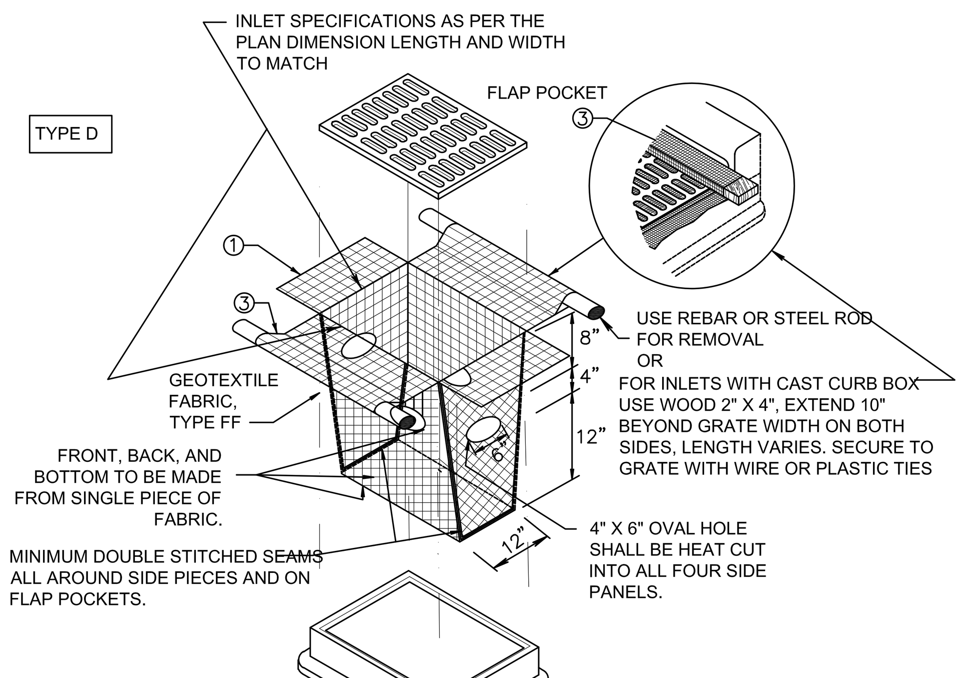


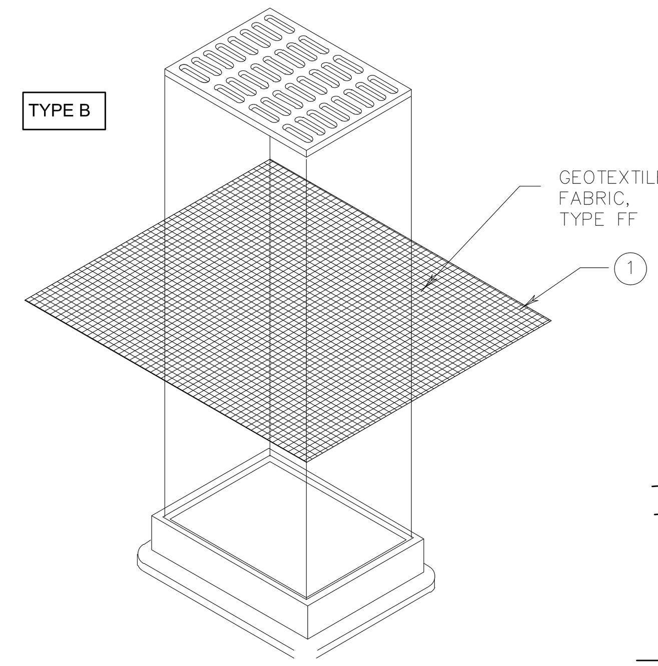


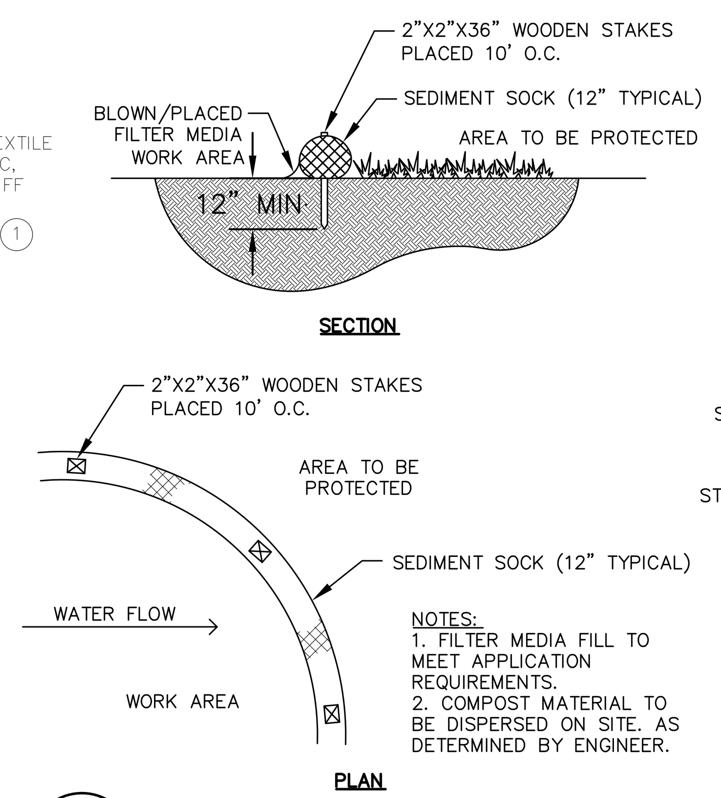


NOTES:
1. FILTER MEDIA FILL TO MEET APPLICATION REQUIREMENTS.
2. COMPOST MATERIAL TO BE DISPERSED ON SITE. AS DETERMINED BY ENGINEER.

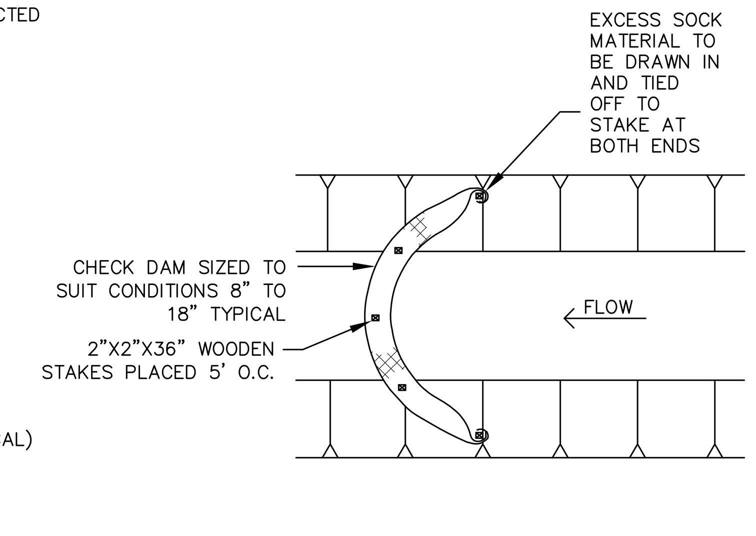


NOTES:
1. SEDIMENT SHOULD BE REMOVED FROM BEHIND CHECK DAM ONCE THE ACCUMULATED HEIGHT HAS REACHED ½ THE HEIGHT OF THE CHECK DAM.
2. CHECK DAM CAN BE DIRECT SEEDED AT THE TIME OF INSTALLATION.

1 / C210 SEDIMENT SOCK — SCALE: NTS

GENERAL NOTES:

INLET PROTECTION DEVICES SHALL BE MAINTAINED OR REPLACED AT THE DIRECTION OF THE ENGINEER.

WHEN REMOVING OR MAINTAINING INLET PROTECTION, CARE SHALL BE TAKEN SO THAT THE SEDIMENT TRAPPED ON THE GEOTEXTILE FABRIC DOES NOT FALL INTO THE INLET. ANY MATERIAL FALLING INTO THE INLET SHALL BE REMOVED IMMEDIATELY

(1) FINISHED SIZE, INCLUDING FLAP POCKETS WHERE REQUIRED, SHALL EXTEND A MINIMUM OF 10" AROUND THE PERIMETER TO FACILITATE MAINTENANCE OR REMOVAL

(2) FOR INSTALLATION WITH CURB BOX, AN ADDITIONAL 18" OF FABRIC IS WRAPPED AROUND THE WOOD AND SECURED WITH STAPLES. THE WOOD SHALL NOT BLOCK THE ENTIRE HEIGHT OF THE CURB BOX OPENING.

(3) FLAP POCKETS SHALL BE LARGE ENOUGH TO ACCEPT WOOD 2x4.

CONSTRUCT PER WDNR TECHNICAL STANDARD 1060.

GENERAL NOTES:

CONSTRUCT PER WDNR TECHNICAL STANDARD 1060

INLET PROTECTION DEVICES SHALL BE MAINTAINED OR REPLACED AT THE DIRECTION OF THE ENGINEER.

WHEN REMOVING OR MAINTAINING INLET PROTECTION, CARE SHALL BE TAKEN SO THAT THE SEDIMENT TRAPPED ON THE GEOTEXTILE FABRIC DOES NOT FALL INTO THE INLET. ANY MATERIAL FALLING INTO THE INLET SHALL BE REMOVED IMMEDIATELY

(1) FINISHED SIZE, INCLUDING FLAP POCKETS WHERE REQUIRED, SHALL EXTEND A MINIMUM OF 10" AROUND THE PERIMETER TO FACILITATE MAINTENANCE OR REMOVAL

NOTE:
INLET PROTECTION TYPE D SHALL BE INSTALLED ON ALL INLETS GREATER THAN 30" DEEP. USE INLET PROTECTION TYPE B ON SHALLOWER INLETS.

2 / C210 INLET PROTECTION TYPE B & D — SCALE: NTS

EROSION NOTES:

A. ANY PROPOSED CHANGES TO THE EROSION CONTROL PLAN MUST BE SUBMITTED TO THE CITY FOR APPROVAL AND INDICATED ON THE PLAN.
B. INSTALL WISDOT TYPE B OR D (AS APPLICABLE) INLET PROTECTION AT ALL INLETS SHOWN ON THE PLANS. IF OTHER INLETS ARE FOUND WITHIN THE DRAINAGE AREA. THE CONTRACTOR SHALL PLACE INLET PROTECTION.
C. A TRACKING PAD WILL NOT BE REQUIRED FOR THIS CONSTRUCTION
D. CONSTRUCTION ACCESS TO THE SITE WILL ONLY BE FROM BARCLAY AVENUE. CONTRACTOR SHALL ENSURE THAT ACCESS TO THE SITE AND BARCLAY AVENUE ARE CLEANED UP FROM DIRT AND TRACKED MUD AT THE END OF EACH DAY.
E. CONTRACTOR SHALL POST A COPY OF THE COVERAGE UNDER WPDES GENERAL PERMIT APPROVAL AT A CONSPICUOUS LOCATION ON THE PROJECT SITE FOR AT LEAST FIVE DAYS PRIOR TO CONSTRUCTION, AND REMAINING AT LEAST FIVE DAYS AFTER CONSTRUCTION. CONTRACTOR MUST ALSO HAVE A COPY OF THE PERMIT AND APPROVED PLAN AVAILABLE AT THE PROJECT SITE AT ALL TIMES UNTIL THE PROJECT IS COMPLETE.
F. CONTRACTOR SHALL EMPLOY EROSION CONTROL METHODS AS SHOWN AND SPECIFIED IN THE WISCONSIN DEPARTMENT OF NATURAL RESOURCES CONSTRUCTION SITE TECHNICAL STANDARDS AND THE WISDOT EROSION CONTROL PRODUCT ACCEPTABILITY LISTS (PAL).
G. ALL EROSION CONTROL MEASURES SHALL BE ADJUSTED TO MEET FIELD CONDITIONS AT THE TIME OF CONSTRUCTION AND SHALL BE INSTALLED PRIOR TO ANY GRADING OR DISTURBANCE OF EXISTING SURFACE MATERIAL ON THE SITE.
H. ALL EROSION AND SEDIMENT CONTROL MEASURES WILL BE CHECKED FOR STABILITY AND OPERATION AFTER A RAINFALL OF 0.5 INCHES OR MORE BUT NOT LESS THAN ONCE EVERY WEEK. ANY NEEDED REPAIRS WILL BE MADE IMMEDIATELY. WRITTEN REPORTS WILL BE KEPT OF ALL EROSION AND SEDIMENT CONTROL INSPECTIONS AS REQUIRED BY THE WISCONSIN DEPARTMENT OF NATURAL RESOURCES (WDNR).
I. SILT FENCE/SEDIMENT SOCK SHALL BE INSTALLED IN THE LOCATIONS SHOWN ON THE CONSTRUCTION PLANS PER DETAILS. SEDIMENT DEPOSITS WILL BE REMOVED FROM BEHIND THE SILT FENCE/SEDIMENT SOCK WHEN DEPOSITS REACH A DEPTH OF 6 INCHES. THE SILT FENCE/SEDIMENT SOCK WILL BE REPAIRED OR REPLACED AS NECESSARY TO MAINTAIN A BARRIER.
J. EROSION CONTROL MEASURES MUST BE IN PLACE AT THE END OF EACH WORK DAY.
K. ALL OFF-SITE SEDIMENT DEPOSITS OCCURRING AS A RESULT OF CONSTRUCTION WORK OR A STORM EVENT SHALL BE CLEANED UP BY THE END OF EACH DAY. FLUSHING SHALL NOT BE ALLOWED.
L. WHERE CONSTRUCTION ACTIVITIES HAVE PERMANENTLY CEASED OR HAVE BEEN TEMPORARILY SUSPENDED FOR MORE THAN SEVEN DAYS, OR WHEN FINAL GRADES ARE REACHED IN ANY PORTION OF THE SITE, STABILIZATION SHALL BE IMPLEMENTED WITHIN SEVEN DAYS. TEMPORARY STABILIZATION PRACTICES SUCH AS MULCH/TACKIFIER, EROSION MAT, OR WISDOT TYPE B SOIL STABILIZER SHALL BE APPLIED TO THE SOIL SURFACE WHEN THE SITE IS NOT READY FOR PERMANENT RESTORATION. WHEN STABILIZATION IS NOT POSSIBLE DUE TO SNOW COVER, STABILIZATION MEASURES SHALL BE INITIATED AS SOON AS POSSIBLE. THE CONTRACTOR SHALL USE CLASS I URBAN TYPE B EROSION MATTING ON ALL SWALE CENTERLINES AND SIDE SLOPES STEEPER THAN 4:1 (25%)
M. STORM WATER AND GROUND WATER PUMPED FROM EXCAVATIONS AND/OR DEWATERING WELLS SHALL BE DISPOSED OF IN ACCORDANCE WITH THE WISCONSIN STATUTES. SEDIMENT BASINS, SEDIMENT TRAPS AND/OR THE USE OF POLYMERS TO CONTROL SEDIMENT SHALL BE UTILIZED AND MEET THE REQUIREMENTS OF THE WISCONSIN WDNR TECHNICAL STANDARDS.
N. ALL TEMPORARY EROSION AND SEDIMENT CONTROL MEASURES SHALL BE REMOVED WITHIN 30 DAYS AFTER FINAL SITE STABILIZATION IS ACHIEVED OR AFTER THE TEMPORARY MEASURES ARE NO LONGER NEEDED.
O. THIS PLAN SHOWS NEW FINISHED GRADES. FOR ALL PAVEMENT AREAS, SUBTRACT THICKNESS OF PAVEMENT AND BASE COURSE SPECIFIED.
P. ALL DIMENSIONS SHOWN ARE TO DECIMAL FEET AND MEASURED TO EDGE OF PAVEMENT, UNLESS SPECIFIED OTHERWISE. PRIOR TO START OF CONSTRUCTION, THE CONTRACTOR SHALL FIELD VERIFY ALL DIMENSIONS AND REPORT ANY DISCREPANCIES TO THE OWNERS REPRESENTATIVE.
Q. CONTRACTOR TO PROVIDE UPDATED CONSTRUCTION SCHEDULE ON BI-WEEKLY BASIS.
R. PROVIDE TRAFFIC CONTROL DURING CONSTRUCTION AS REQUIRED TO MAINTAIN SAFE CONDITIONS FOR WORKERS AND THE PUBLIC.
S. CONTRACTOR TO INSTALL AND USE CONCRETE WASH-OUT AREAS AS NEEDED IN AREAS DESIGNATED ON THE PLAN
T. IF DEWATERING IS NECESSARY, MAXIMUM OUTPUT MAY NOT EXCEED 70 GPM WITHOUT A PERMIT.

DIGGERS HOTLINE
Toll Free (800) 242-8511
Milwaukee Area (414) 259-1181
Hearing Impaired TDD (800) 542-2289
www.DiggersHotline.com

## LEGEND

- SILT SOCK
- REMOVE PAVEMENT ONLY
- REMOVE PAVEMENT & BASE
- CLEAR AND GRUB AREA
- REMOVE ELEMENT
- REMOVE FENCE/CURB
- SAW CUT PAVEMENT
- INLET PROTECTION

*SITE SURVEYING PERFORMED BY AYRES ASSOCIATES, INC MAY 2015

*SEEDING AND STABILIZATION INFORMATION & DEADLINES ARE AS FOLLOWS:
-CONTRACTOR TO USE WISDOT MIX #40 AT A RATE OF 3.0 LBS/1000 SF
-CONTRACTOR TO USE ANNUAL SEEDING AT A RATE OF 2.0 LBS/1000 SF
-CONTRACTOR TO APPLY FERTILIZER AT A RATE OF 2 LBS/1000 SF
AFTER SEPTEMBER 15TH, A COOL WEATHER SEEDING COVER CROP MUST BE APPLIED (I.E. OATS)
AFTER OCTOBER 15TH, A DORMANT SEEDING COVER CROP MUST BE APPLIED (I.E. WINTER WHEAT)
AFTER NOVEMBER 15TH, A DORMANT SEEDING MUST BE APPLIED WITH AN ACCEPTABLE SOIL STABILIZER. (POLYACRYLIMIDE)

NOTES:

1. CONTRACTOR SHALL CONTACT DIGGERS HOTLINE, APPROPRIATE UTILITY COMPANIES AND CITY DEPARTMENTS A MINIMUM OF THREE (3) DAYS PRIOR TO THE START OF ANY CONSTRUCTION TO FIELD VERIFY UTILITIES.
2. CONTRACTOR SHALL TAKE CARE NOT TO DAMAGE TREES THAT ARE TO REMAIN. CONTRACTOR SHALL KEEP HEAVY EQUIPMENT A MINIMUM OF 15 FEET AWAY FROM ALL TREES UNLESS CONSTRUCTION DICTATES A CLOSER PROXIMITY.
3. CONTRACTOR TO PROPOSE LOCATION OF SITE TRAILER, STAGING, AND PARKING TO PROJECT ENGINEER PRIOR TO LOCATION OF ITEMS IN THE FIELD.
4. COORDINATE CONSTRUCTION ACTIVITIES WITH THE CITY OF MILWAUKEE.
5. CONTRACTOR WILL PROTECT ALL MONITORING WELLS LOCATED IN OR AROUND THE SITE.

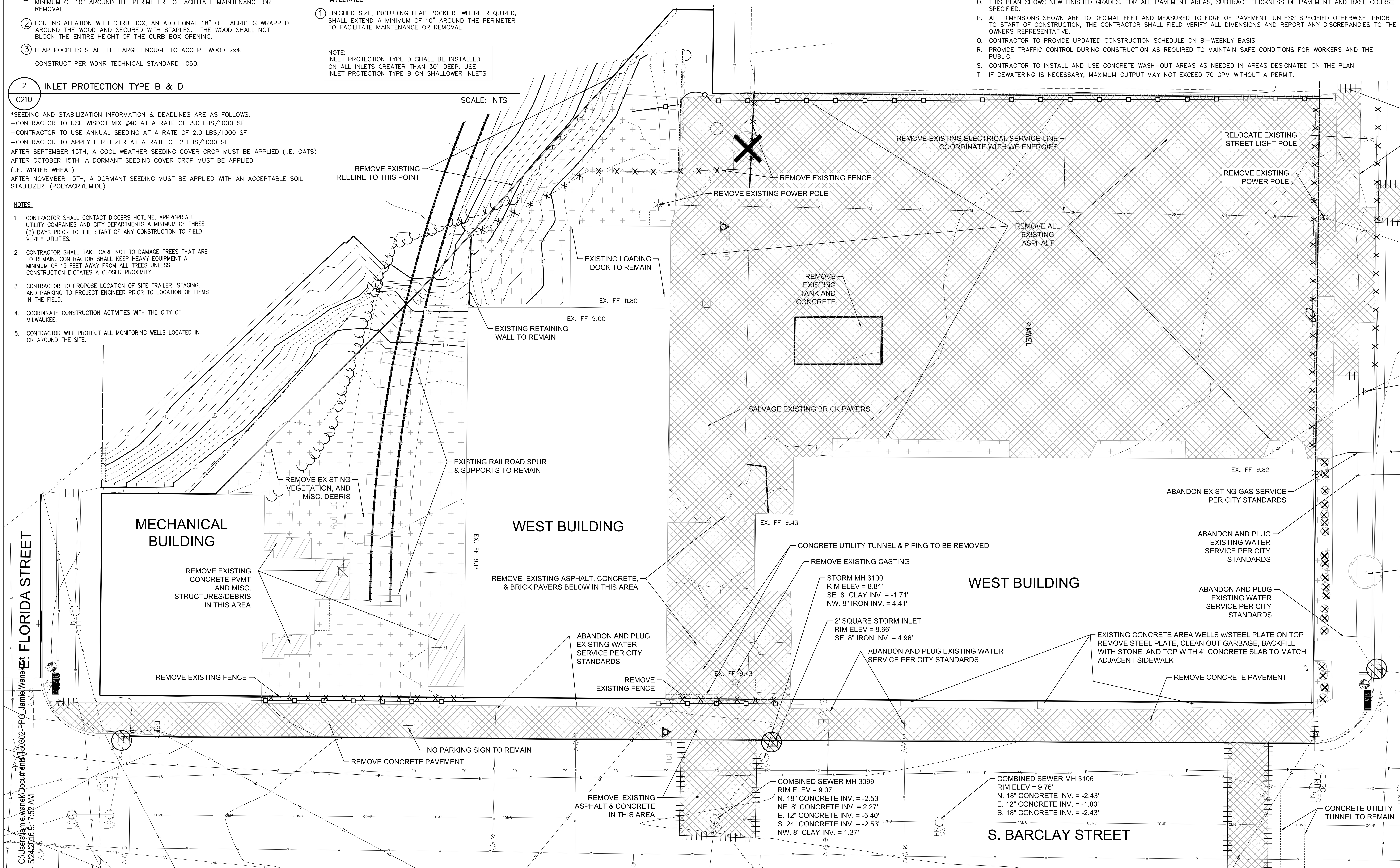


C:\Users\jamie.wanek\Documents\150302-PPG_Jamie.Wanek
5/24/2016 9:17:52 AM

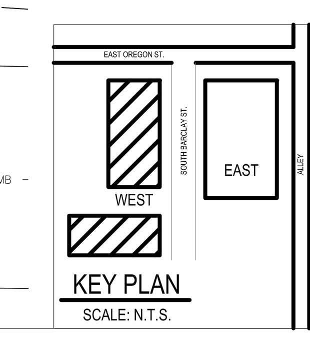


CONTINUUM
ARCHITECTS + PLANNERS, S.C.

CONSULTANTS:

Spire Engineering, Inc.
130 W. Bruce St. Suite 420
Milwaukee, WI 53204
SE Project #: 13021

AYRES ASSOCIATES

THE MATRIX GROUP ENGINEERING CONSULTANTS

THE BARCLAY - BUILDING 33 & 34
300 S. BARCLAY AVE., MILWAUKEE, WI 53204

SHEET TITLE: EXISTING CONDITIONS, SITE DEMOLITION & EROSION CONTROL PLAN

REVISIONS:

| | |
|---|---|
| SCALE | VARIES |
| PROJECT NUMBER | 150302 |
| SET TYPE | PLAN EXAMINATION |
| DATE ISSUED | 03/03/2017 |
| SHEET NUMBER | C210 |

COPYRIGHT 2016, CONTINUUM ARCHITECTS + PLANNERS S.C.

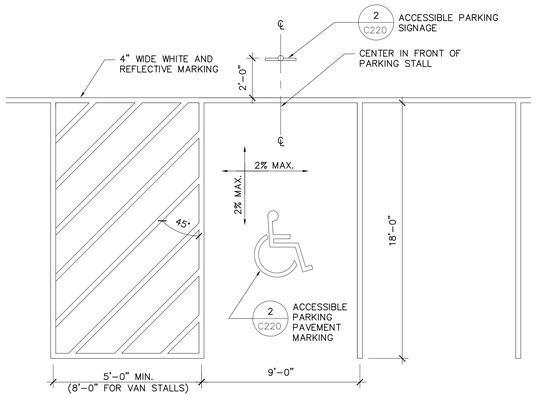


1 C220 ACCESSIBLE PARKING

NTS

NOTE:
SYMBOL TO BE PAINTED IN ALL ACCESSIBLE PARKING SPACES.

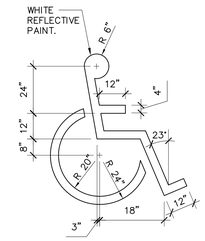


2 C220 ACCESSIBLE PARKING SIGNAGE AND PAVEMENT MARKING

NTS

## LEGEND

- CONCRETE
- PAVERS (SEE LANDSCAPE PLAN)
- PLANTING AREAS (SEE LANDSCAPE PLAN)
- EX. WATER MAIN
- EX. FIBER OPTIC
- EX. ELECTRICAL SERVICE
- EX. GAS SERVICE
- EX. STORM SEWER
- EX. OVERHEAD ELECTRIC

PROVIDE CONCRETE PADS FOR NEW TRANSFORMER AND GENERATOR. SEE MEP PLANS FOR SIZING AND LOCATION.

N

0 10' 20'

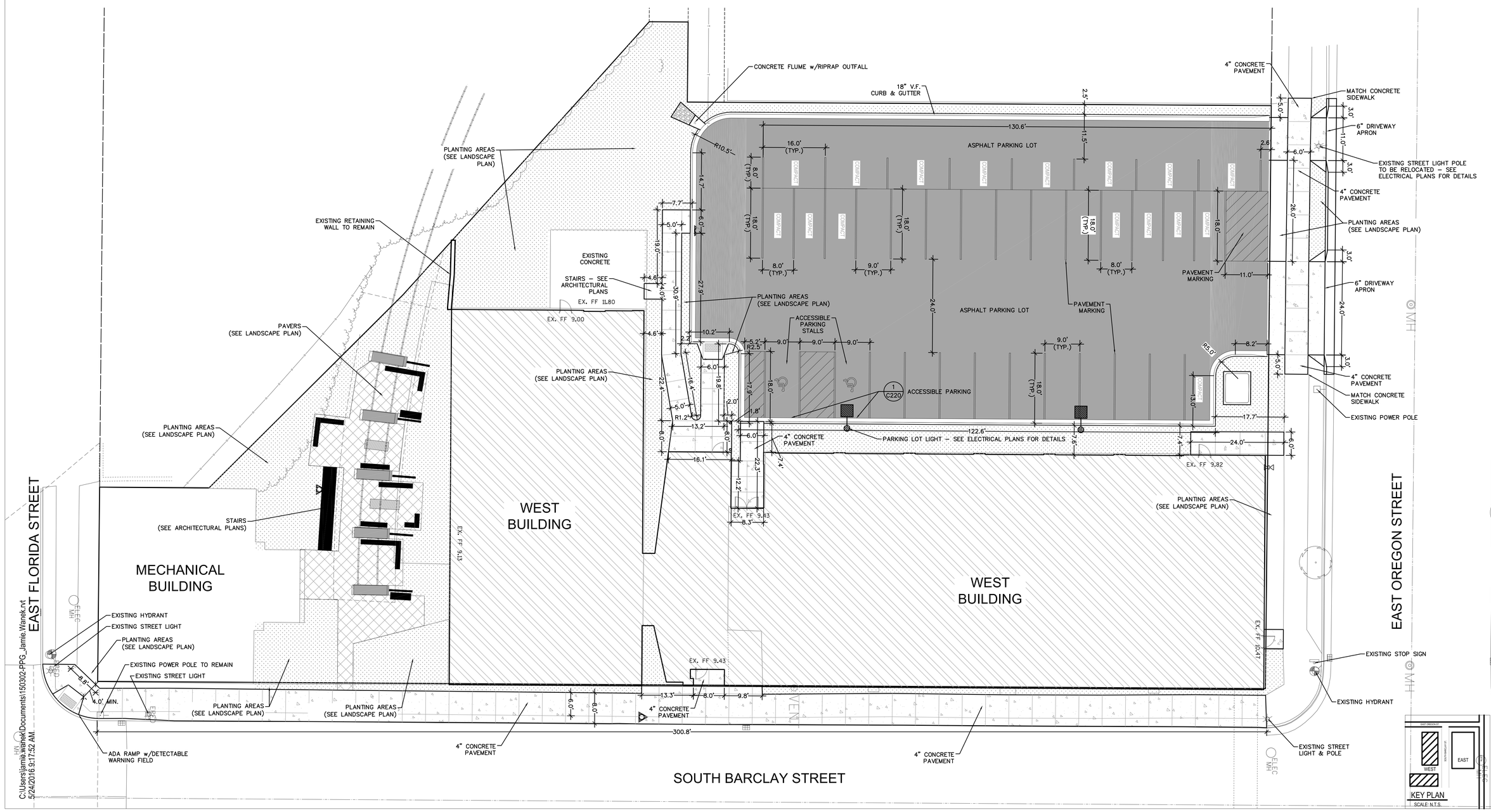


C:\Users\jamie.wanek\Documents\150302-PPG_Jamie.Wanek.rvt
5/24/2016 9:17:52 AM

DIGGERS HOTLINE
Toll Free (800) 242-8511
Milwaukee Area (414) 259-1181
Hearing Impaired TDD (800) 542-2289
www.DiggersHotline.com

CONTINUUM
ARCHITECTS + PLANNERS, S.C.
P.O. BOX 1102663
MILWAUKEE, WI 53203
T 414.290.9640
F 414.290.9595

COPYRIGHT 2016, CONTINUUM ARCHITECTS + PLANNERS S.C.

CONSULTANTS:

Spire Engineering, Inc.
130 W. Bruce St, Suite 420
Milwaukee, WI 53204
(414) 278-6200
SE Project #: 13021

AYRES ASSOCIATES
Ayres-SAA Design Group
101 East Badger Road
Madison, WI 53719
Office (608)233-0900

THE MATRIX GROUP
ENGINEERING CONSULTANTS
311 EAST CHICAGO STREET, SUITE 310, MILWAUKEE, WI 53202
PHONE: (414) 329-28527 FAX: (414) 329-28520

THE BARCLAY - BUILDING 33 & 34

300 S. BARCLAY AVE., MILWAUKEE, WI 53204

SHEET TITLE: SITE PLAN

REVISIONS:

| | |
|---|---|
| SCALE | VARIES |
| PROJECT NUMBER | 150302 |
| SET TYPE | **PLAN EXAMINATION** |
| DATE ISSUED | **03/03/2017** |
| SHEET NUMBER | C 220 |

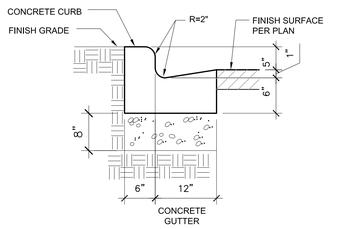


STANDARD CURB

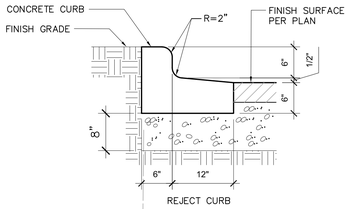


REJECT CURB

1 / C230 CONCRETE CURB & GUTTER 18-INCH

SCALE NTS

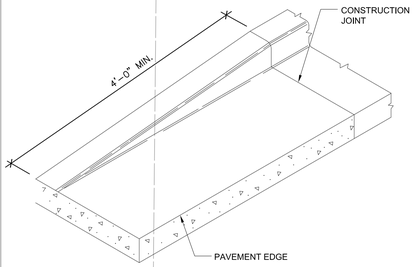


2 / C230 CURB TAPER

SCALE: NTS

| PAVEMENT TYPE: | CONCRETE THICKNESS (A) | BASE THICKNESS (B) | LOCATION |
|---|---|---|---|
| TYPE 1 CONCRETE PAVEMENT | 4" | 6" | SIDEWALK |
| TYPE 2 CONCRETE PAVEMENT | 7" | 6" | DRIVEWAY |

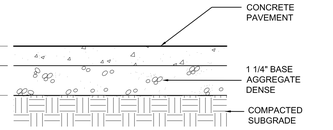


NOTES:
1. STANDARD COLOR CONCRETE
2. MEDIUM BROOM FINISH, PERP. TO DIR. OF TRAVEL
3. PROVIDE EXPANSION JOINTS 30' ALL WAYS, MINIMUM

3 / C230 CONCRETE PAVEMENT

NTS

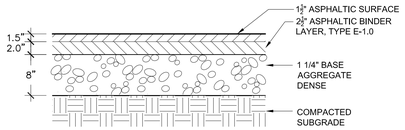


4 / C230 ASPHALT PAVEMENT

NTS

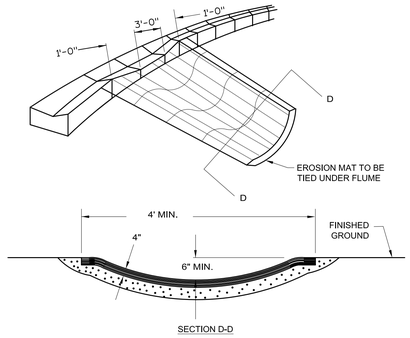


5 / C230 CONCRETE FLUME

NTS

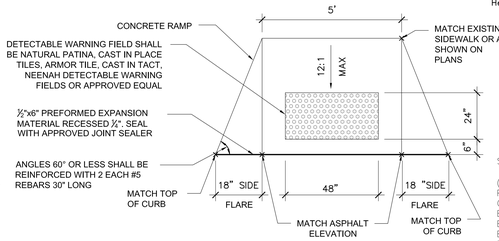


6 / C230 ACCESSIBLE RAMP

NTS

SPOT ELEVATION ABBREVIATIONS:

(XXX.XX) = EXISTING SURFACE
P = PAVEMENT
C = CONCRETE
EP = EXISTING PAVEMENT
EC = EXISTING CONCRETE
EW = EXISTING SIDEWALK
FS = FINISHED SURFACE
FG = FINISHED GRADE
TS = TOP OF STAIRS
BS = BOTTOM OF STAIRS
TC = TOP OF CURB
TW = TOP OF WALL
BW = BOTTOM OF WALL
IE = INVERT ELEVATION




7 / C230 THICKENED EDGE WALK

SCALE: NTS

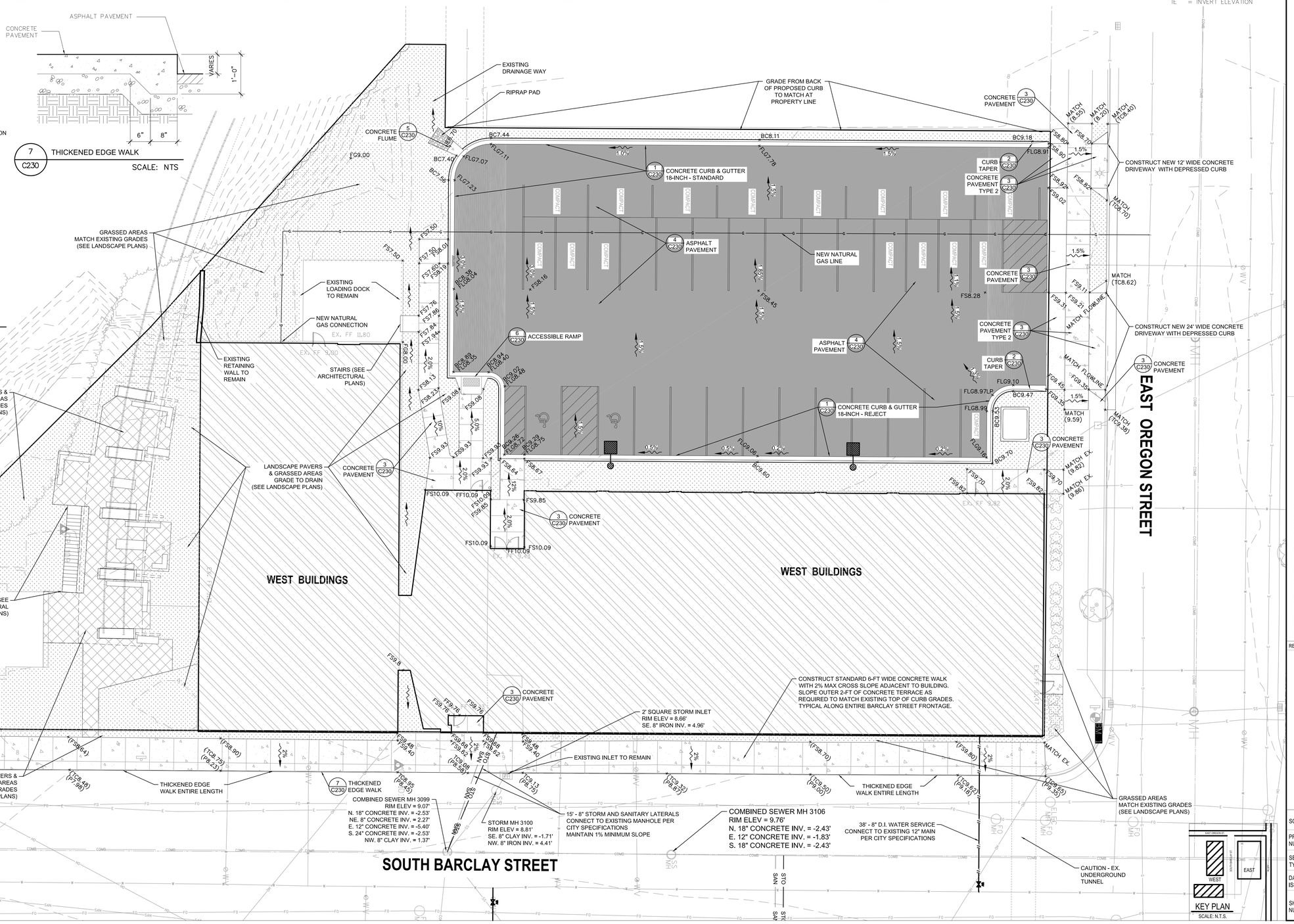


C:\Users\jamie.wanek\Documents\150302-PPG_Jamie.Wanek.rvt
5/24/2016 9:17:52 AM

DIGGERS HOTLINE
Toll Free (800) 242-8511
Milwaukee Area (414) 259-1181
Hearing Impaired TDD (800) 542-2289
www.DiggersHotline.com

CONTINUUM ARCHITECTS + PLANNERS, S.C.
P.O. BOX 1982
MILWAUKEE, WI 53203
T 414.220.9640
F 414.220.9595

CONSULTANTS:

Spire Engineering, Inc.
130 W. Bruce St, Suite 420
Milwaukee, WI 53204
(414) 278-6200
SE Project #: 13021

AYRES ASSOCIATES
Ayres-SAA Design Group
101 East Badger Road
Madison, WI 53719
Office (608)215-0900

THE MATRIX GROUP
ENGINEERING CONSULTANTS
311 EAST CHICAGO STREET, SUITE 310, MILWAUKEE, WI 53202
PHONE: (414) 329-28520 FAX: (414) 329-28527

COPYRIGHT 2016, CONTINUUM ARCHITECTS + PLANNERS S.C.

THE BARCLAY - BUILDING 33 & 34
300 S. BARCLAY AVE., MILWAUKEE, WI 53204

SHEET TITLE: SITE GRADING & DRAINAGE PLAN

REVISIONS:

| | |
|---|---|
| SCALE | VARIES |
| PROJECT NUMBER | 150302 |
| SET TYPE | PLAN EXAMINATION |
| DATE ISSUED | 03/03/2017 |
| SHEET NUMBER | C 230 |

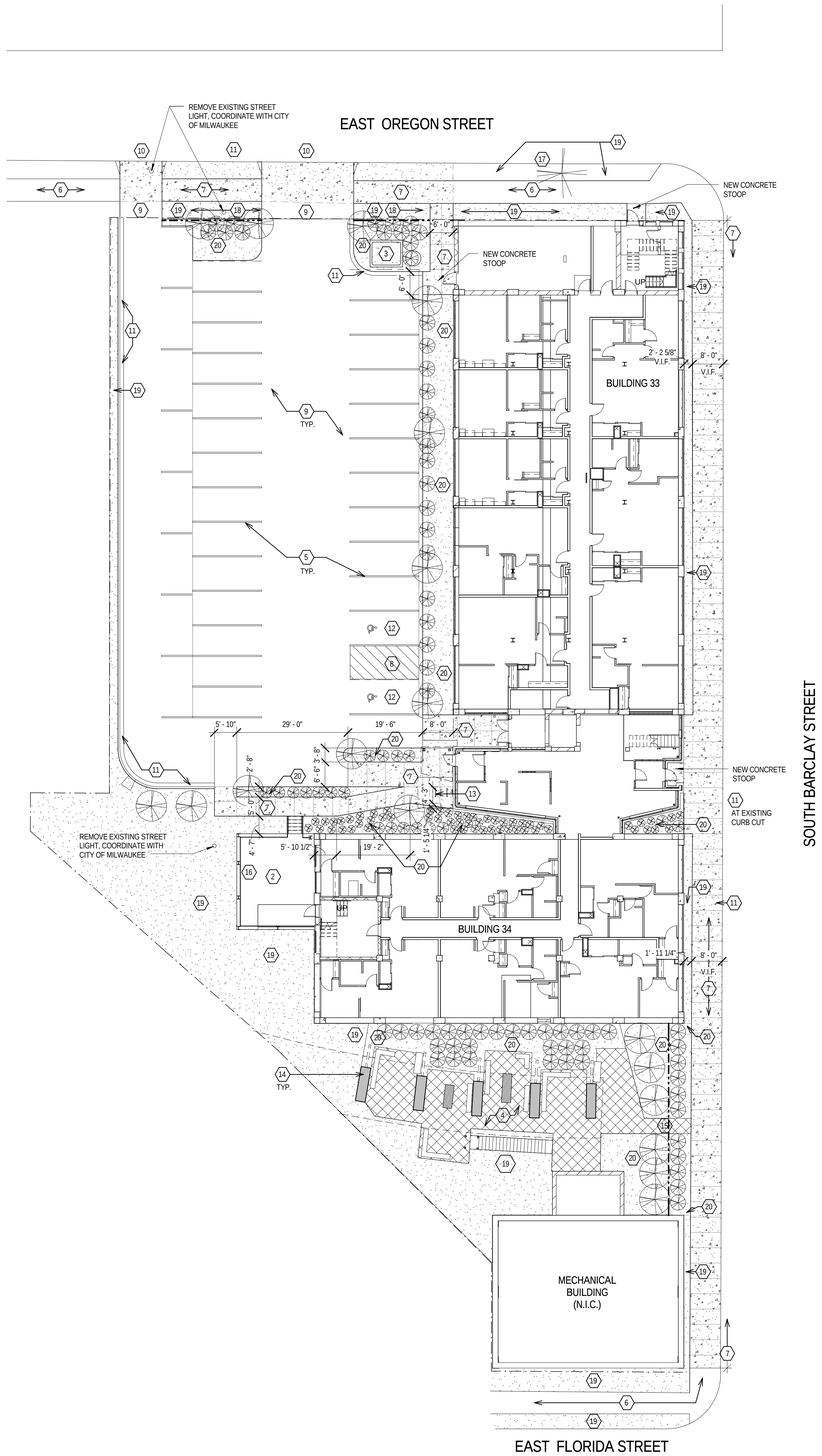


1 NEW WORK PLAN - SITE PLAN - WEST BUILDINGS

Scale: 1/16" = 1'-0"

0' 4' 8' 16' 24'

## SITE PLAN KEYNOTES

ALL KEY NOTES MAY NOT BE USED ON ALL SHEETS

1. NOT USED
2. EXISTING CONCRETE LOADING DOCK TO REMAIN
3. ELECTRICAL TRANSFORMER AND GENERATOR W/ CONC. PADS. PROVIDE EVERGREEN SHRUBS ALL AROUND. COORDINATE WITH ELECTRICAL ENGINEER AND WE ENERGIES.
4. LANDSCAPE PATIO WITH PAVERS AND SITE FURNITURE, TYP. SUBMIT CUT SHEETS FOR DESIGN PER ALLOWANCE
5. PARKING STALLS WITH STRIPING, TYP. SEE CIVIL DRAWINGS FOR DIMENSIONS AND DETAILS.
6. EXISTING CITY SIDEWALK TO REMAIN, TYP. CUT AND DEMO AS REQUIRED FOR NEW CONSTRUCTION. PATCH SIDEWALK DAMAGED DURING CONSTRUCTION PER CITY STANDARDS.
7. NEW SIDEWALK. SEE CIVIL DRAWINGS.
8. PEDESTRIAN STRIPING, TYP. SEE CIVIL FOR ADDITIONAL INFO.
9. NEW ASPHALT PAVING, TYP. SEE CIVIL DRAWINGS
10. NEW CONC. CURB CUT, SEE CIVIL DRAWINGS
11. NEW CONC. CURB & GUTTER, SEE CIVIL DRAWINGS
12. HANDICAP PARKING STALL. PROVIDE REQUIRED SIGNAGE PER CODE AT ALL STALLS INCLUDING VAN ACCESSIBLE (SEE CIVIL DWGS)
13. BIKE RACK. SUBMIT CUT SHEETS FOR DESIGN PER ALLOWANCE
14. EXISTING CONCRETE STRUCTURAL SUPPORTS FOR RAILROAD SPUR TO REMAIN TYP. PAINT.
15. NEW PRE-FINISHED METAL PICKET FENCE, TYP.
16. EXISTING STEEL FRAME STRUCTURE TO REMAIN.
17. EXISTING TREE TO REMAIN
18. PER MILWAUKEE ZONING REGULATIONS PROVIDE THE FOLLOWING MINIMUM:
    1. 1 DECIDUOUS TREE PER 25'
    2. 2 STAGGERED ROWS WITH SHRUBS, MAX. OF 4' O.C. EACH ROW
    3. SHRUB SIZE: 2' DIAMETER AT PLANTING, 2' HIGH AT PLANTING, 3.5' HIGH AT MATURITY
    4. INTERIOR LOT: (2 EA.)TREES & SHRUBS / 8 SPACES= (6 EA.)
    5. 5% OF LOT AREA SHOULD BE LANDSCAPED (10,800 SF. MIN. 550SF LANDSCAPING REQUIRED)
    6. PROVIDE 3'-0" HIGH DECORATIVE METAL FENCE
    7. REFER TO MILWAUKEE ZONING CODE 295-405 FOR ADDITIONAL REQUIREMENTS.
19. NEW LANDSCAPE AREA OF GRASS, WITH MINIMUM OF 6" OF TOPSOIL, TYPICAL
20. NEW LANDSCAPE AREA OF MULCH BED WITH MINIUM OF 12" TOPSOIL, AND 4" OF WOOD MULCH, TYPICAL
21. FUTURE STAIR UP TO EXISTING RAILWAY SPUR

## SITE PLAN KEY

GENERAL NOTES:

1. SUBMIT LANDSCAPE PLAN TO ARCHITECT FOR REVIEW
2. PROVIDE NATIVE LANDSCAPE PLANTING
3. PROVIDE GRASS THAT USES LESS WATER SUCH AS BLUE GAMMA, FESCUE, OR 'NO MOW'
4. PROVIDE MULCH IN ALL AREAS LANDSCAPED WITH SHRUBS AND TREES.
5. EXISTING SOILS HAVE BEEN DETERMINED TO BE HAZARDOUS PER THE ENVIRONMENTAL REPORT AND WILL NEED TO BE ENCAPSULATED OR REMOVED. ANY SOIL THAT IS REMOVED FROM SITE WILL NEED TO BE DISPOSED OFF IN AN APPROPRIATE MANNER. ANY EXISTING UNENCAPSULATED SOIL THAT WILL BE EXPOSED WILL NEED REMEDIAL ACTION. SEE ENVIRONMENTAL REPORT FOR REQUIREMENTS RELATED TO ENCAPSULATION, REMEDIAL ACTION AND DISPOSAL.

SHRUBS AND LANDSCAPED AREA

EXISTING TREE

ORNAMENTAL TREE

GRASS

PAVERS

ASPHALT PAVING

CONCRETE WALKWAY

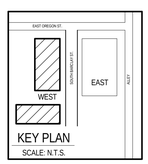


KEY PLAN

SCALE: N.T.S.

CONTINUUM
ARCHITECTS + PLANNERS, S.C.
P.O. BOX 5,0063
MILWAUKEE, WI 53203
T 414.320.9640
F 414.220.9595

COPYRIGHT 2017, CONTINUUM ARCHITECTS + PLANNERS S.C.

CONSULTANTS:

AVRES ASSOCIATES

spire ENGINEERING

THE MATRIX GROUP ENGINEERING CONSULTANTS
311 EAST CHICAGO STREET, SUITE 310, MILWAUKEE, WI 53202
PHONE: (414) 329-9827 FAX: (414) 329-9820

THE BARCLAY - BUILDING 33 & 34

305 S. BARCLAY ST., MILWAUKEE, WI 53204

SHEET TITLE: ARCHITECTURAL SITE PLAN - WEST BUILDINGS

REVISIONS:

| | |
|---|---|
| SCALE | VARIES |
| PROJECT NUMBER | 150302 |
| SET TYPE | PLAN EXAMINATION - RESUBMITTAL |
| DATE ISSUED | 03/03/17 |
| SHEET NUMBER | A2.03 |

C:\Users\corey.lapworth\Documents\150302-PPG_corey.lapworth.rvt
3/10/2017 11:56:53 AM

# SECTION 33 05 00
# COMMON WORK RESULTS FOR UTILITIES

## PART 1 - G E N E R A L

### 1.1 SCOPE
This section provides information common to two or more technical site work specification sections or items that are of a general nature, and not included in other sections. This section applies to ALL site work, as applicable.

### 1.2 RELATED WORK
Section 33 40 00 – Storm Drainage Facilities

### 1.3 REFERENCE

A. Applicable provisions of Division 1 govern work under this Section.

### 1.4 REFERENCED ORGANIZATIONS

A. Applicable provisions of Division 1 shall govern all work under this section.

B. Abbreviations of organizations referenced in these specifications are as follows:
1. AASHTO American Association of State Highway and Transportation Officials
2. ACPA American Concrete Pipe Association
3. ANSI American National Standards Institute
4. ASCE American Society of Civil Engineers
5. ASME American Society of Mechanical Engineers
6. ASTM American Society for Testing and Materials
7. AWWA American Water Works Association
8. AWS American Welding Society
9. FHA Federal Highway Administration
10. EPA Environmental Protection Agency
11. NEC National Electric Code
12. NEMA National Electrical Manufacturers Association
13. NFPA National Fire Protection Association
14. NSF National Sanitation Foundation
15. OSHA Occupational Safety and Health Administration
16. STI Steel Tank Institute
17. UL Underwriters Laboratories Inc.
18. WDNR State of Wisconsin Department of Natural Resources
19. WISDOT State of Wisconsin Department of Transportation

### 1.5 REFERENCED DOCUMENTS

A. Where reference is made to the "SSHSC", it shall mean the pertinent sections of the State of Wisconsin, Department of Transportation, Standard Specifications for Highway and Structure Construction, current edition, and all supplemental and interim supplemental specifications. Where reference is made to the “SSSWC”, it shall mean pertinent sections of the Standard Specifications for Sewer and Water Construction in Wisconsin, current edition. Where reference is made to the “BMPH”, it shall mean the

Wisconsin Construction Site Best Management Practice Handbook, current edition as published by the WDNR. Method of measurement and basis of payment sections in referenced documents shall not apply.

1.6 QUALITY ASSURANCE

A. Provide materials and products as required by individual specification sections. Refer to General Conditions of the Contract regarding substitutions.

B. Provide quality assurance testing and reporting as required by individual specification sections.

1.7 SAFETY

A. Contractor is solely responsible for worksite safety.

B. Perform all work in accordance with applicable OSHA, state and local safety standards.

C. Contact Diggers Hotline at 1-800-242-8511 in accordance with statutory requirements. Request that non-member utilities and private utilities be located by the appropriate parties.

1.8 PERMITS

A. Unless otherwise noted in the Contract Documents, Contractor shall be responsible for obtaining and paying for all permits necessary to complete the work.

1.9 CONSTRUCTION LIMITS

A. Construction Limits are indicated on the drawings. In the absence of such a designation on the drawings, confine work to the minimum area reasonably necessary to undertake the work as determined by the A/E or owner. In no case shall construction activities extend beyond state property lines or construction easements.

B. The Contractor shall restore all disturbed areas in accordance with the drawings and specifications. If plans and specifications do not address restoration of specific areas, these areas will be restored to pre-construction conditions as approved by the A/E or owner.

1.10 WORK BY OTHERS

A. Coordinate work under this project with work by Owner and other contractors on the site.

1.11 SUBMITTALS

A. Refer also to General Conditions of the Contract and Division 1.

B. Submit manufacturer's shop drawings, product data, samples, substitutions and operation and maintenance (O&M) data for approval as required by individual specification sections.

C. Unless otherwise noted, provide digital copies of each submittal. Submit to project architect/engineer (A/E) unless otherwise directed at the Pre-Construction Meeting.

1.12 OFF SITE STORAGE

A. Refer to Division 1.

B. In general, the payments for materials stored off site will only be considered in instances where there is limited space available for storage on the site. Prior approval by the owner, together with the execution of a Storage Agreement will be required.

1.13 CODES

A. Comply with the requirements of all applicable, local, state and federal codes.

1.14 CERTIFICATIONS AND INSPECTIONS

A. Refer to General Conditions.

B. Obtain and pay for all required sampling, testing, inspections, and certifications except those expressly listed as provided by the Engineer or other third party in the Contract Documents. Deliver originals of certificates and documents to the owner w/I 3 days; provide copies to the A/E. Include copies of the certifications and documents in the O&M Manual.

1.15 OPERATION AND MAINTENANCE DATA

A. All operations and maintenance data shall comply with the submission and content requirements specified under section GENERAL REQUIREMENTS.

PART 2 - M A T E R I A L S

2.1 BARRICADES, SIGNS, AND WARNING DEVICES

A. Traffic barricades, traffic signs, and warning devices shall meet the requirements of applicable OSHA standards and the FHA Manual of Uniform Traffic Control Devices (MUTCD).

2.2 TEMPORARY PLASTIC BARRIER FENCING

A. UV stabilized high-density polyethylene barrier fence free of holes tears and other defects. Provide 4’ tall fence in diamond or rectangular pattern. Fencing shall be “safety orange” color, unless otherwise noted.

B. Posts for temporary plastic barrier fencing shall be 5’ tall, minimum 12 gauge, painted metal posts.

PART 3 - E X E C U T I O N

3.1 MAINTENANCE OF SITE AND BUILDING ACCESS/EGRESS

A. Unless otherwise shown or directed, maintain existing access and egress to the facility throughout construction. Maintain ANSI A117 compliant access for disabled persons, delivery access, emergency

vehicle access, and emergency egress. Do not interrupt access and egress without prior written approval from the owner.

3.2 CONTINUITY OF EXISTING TRAFFIC/PARKING AND TRAFFIC CONTROL

A. Refer also to Section GR - General Requirements.

B. Do not interrupt or change existing traffic, delivery, or parking without prior written approval from the owner. When interruption is required, coordinate schedule with the Owner to minimize disruptions. When working in public right-of-way, obtain all necessary approvals and permits from applicable municipalities and WISDOT.

C. When Contractor's activities impede or obstruct traffic flow, Contractor shall provide traffic control devices, signs and flaggers in accordance with other Contract Documents and the current version of the MUTCD, or as shown on the Drawings.

3.3 PROTECTION AND CONTINUITY OF EXISTING UTILITIES

A. Verify the locations of any water, drainage, gas, sewer, electric, drainage, gas, sewer, electric, telephone/communication, fuel, steam lines or other utilities and site features which may be encountered in any excavations or other sitework. All lines shall be properly underpinned and supported to avoid disruption of service.

B. Do not interrupt or change existing utilities without prior written approval from A/E or owner, affected utilities and users. Notify all users impacted by outages a minimum of 48 hours in advance of outage. Notification shall be provided in writing and describe the nature and duration of outages and provide the name and number of Contractor's foreman or other contact.

C. Any service connections encountered which are to be removed shall be cut off at the limits of the excavation and capped in accordance with the requirements of applicable codes and any specifications governing such removals.

3.4 PROTECTION OF EXISTING WORK AND FACILITIES

A. Verify the locations of, and protect, any signs, paved surfaces, buildings, structures, landscaping, streetlights, utilities, and all other such facilities that may be encountered or interfered with during the progress of the work. Take measures necessary to safeguard all existing work and facilities that are outside the limits of the work or items that are within the construction limits but are intended to remain. Report any damage to existing facilities to the A/E or owner immediately. Correct and pay for all damages.

3.5 STORMWATER/EXCAVATION WATER MANAGEMENT

A. Control grading around structures, pitch ground to prevent water running into excavated areas.

B. Pits, trenches within building lines and other excavations shall be maintained free of water.

C. Provide trenching, pumping, other facilities required.

D. Notify Architect/Engineer if springs or running water are encountered in excavation; provide discharge by trenches, drains, pumping to point outside of excavation. Provide information to Architect/Engineer

of points and areas that water will be discharged. At the Engineer's option, the Contractor shall drain the spring to the storm sewer system by the use of field tile.

E. Be responsible for control measures to prevent damage from flooding, erosion, and sedimentation to on-site and off-site areas.

END OF SECTION 330500

# SECTION 33 11 00
# WATER UTILITY DISTRIBUTION PIPING

## PART 1 - G E N E R A L

### 1.1 SCOPE

The work under this section shall consist of providing all work, materials, labor, equipment, and supervision necessary to provide water distribution system components and other work, as required in these specifications, on the drawings and as otherwise deemed necessary to complete the work.

### 1.2 RELATED WORK

A. Section 02 00 00 – Existing Conditions

B. Section 31 25 00 – Erosion Control

### 1.3 REFERENCE

A. Applicable provisions of Division 1 govern work under this Section.

### 1.4 REFERENCED STANDARDS

A. American Society for Testing and Materials (ASTM):
1. B88 Standard Specifications for Seamlesss Copper Water Tube
2. F477 Standard Specifications for Elastomeric Gaskets for Joining Plastic Pipe
3. D3139 Standard Specifications for Joints for Plastic Pressure Pipes Using Flexible Elastomeric Seals
4. D3350 Standard Specifications for Polyethylene Plastic Pipe and Fittings Materials American Water Works Association (AWWA):
5. C104/ANSI A21.4-95 Standard for Cement-Mortar Lining for Ductile-Iron Pipe and Fittings for Water
6. C105/ANSI A21.5-99 Standard for Polyethylene Encasement for Ductile-Iron Piping for Water and Other Liquids
7. C111/ANSI A21.11-00 Standard for Rubber-Gasket Joints for Ductile Iron Pressure Pipe and Fittings
8. C151/ANSI A21.51-02 Standard for Ductile Iron Pipe, Centrifugally Cast for Water or Other Liquids
9. C153/ANSI A21.53-00 Standard for Ductile Iron Compact Fittings for Water or Other Liquids
10. C502-94 Dry Barel Fire Hydrants
11. C504-00 Rubber-Seated Butterfly Valves
12. C509-01 Resilient-Seated Gate Valves for Water Supply Service
13. C515-01 Reduced Wall, Resilient Seated Gate Valves for Water Supply Service
14. C550-01 Protective Epoxy Interior Coatings for Valves and Hydrants
15. C800-01 Underground Service Line Valves and Fittings
16. C900-97 Polyvinyl Chloride Pressure Pipe, and Fabricated Fittings for Water Distribution (4”-12”)
17. C905-97 Polyvinyl Chloride Pressure Pipe, and Fabricated Fittings for Water Distribution (14”-48”)
18. C906-99 Polyethylene Pressure Pipe, and Fabricated Fittings for Water Distribution (4”-63”)Applicable provisions of Division 1 shall govern all work under this section.

## 1.5 SUBMITTALS

A. Provide manufacturers product information (cut sheets) and O&M information for watermain materials including:
   1. Pipe
   2. Fittings

B. Provide reports that document pressure and continuity testing proceedures and results.

C. Provide reports that document safe sample collection proceedures and results.

D. Provide copies of record drawings.

## 1.6 UALITY ASSURANCE

A. Maintain and submit record drawings.

B. Conduct pressure testing, continuity testing and safe sampling as required in Part 3 – Execution.

## 1.7 PERMITS/FEES

A. Contractor shall be solely responsible for obtaining all permits necessary to complete the work. Contractor shall pay all fees associated with obtaining permits. These include, but are not limited to permits for work within public right-of-way, street opening permits, utility connection permits, and plumbing permits.

## 1.8 PROVISIONS FOR FUTURE WORK

A. Construct watermain system in a manner that will facilitate future extension or connection.

B. Review plans prior to installation, and notify Owner's Construction Representative if proposed design does not appear to accommodate future extension or connection.

C. Unless otherwise shown on the plans provide valves on "dead end" mains that will allow dry connection to the watermain system. Terminate "dead end" mains with full length of pipe beyond the valve, and a bell end with restrained plug.

## 1.9 SURVEY AND STAKING

A. Owner will provide benchmarks or control points for the project.

B. Contractor shall be responsible for transfering benchmarks, control points, lines and grades necessary to complete his work.

## 1.10 RECORD DRAWINGS

A. Maintain record drawings that show the actual locations, sizes and types of utilities and other features encountered.

B. Note any modifications to proposed watermain size, alignment, or grades. Record any other deviations from the original design.

## PART 2 - M A T E R I A L S

### 2.1 PVC WATERMAIN

A. Polyvinyl chloride pipe conforming to the requirements of AWWA C900 (4”-12”) or AWWA C905 (14”-48”). Unless otherwise noted, PVC watermain pipe shall have a dimension ratio (DR) of 18 or less. Pipe shall meet applicable NSF standards for use in a potable water distribution system.

B. PVC watermain joints shall be rubber gasket push-on joint conforming to ASTM D 3139, using a gasket that conforms to ASTM F477.

### 2.2 HDPE WATERMAIN

A. High density polyethylene pipe conforming to the requirements of AWWA C906 (4”-63), current version. Unless otherwise noted, HDPE watermain shall have a DR of 11.

B. Polyethylene resisn used for manufacturing piping shall meet or exceed the requirements of ASTM D3350 for PE 3408 material with a cell classification of 345434C. The polyethylene compound sahll be combined with carbon black to provide protection against degredation by ultraviolet light.

### 2.3 COPPER WATER SERVICE

A. Type K, soft copper tubing meeting the requirements of ASTM B88. Copper watermain 1 ½” in diameter and larger shall be provided in straight lengths, not roll stock.

### 2.4 BRASS WATER SERVICE FITTINGS

A. Service Saddles
1. Double strap, bronze service saddles meeting the requirements of AWWA C800. Service saddles shall be provided with nitrile O-ring gasket and AWWA Taper outlet.
2. Service saddles shall be properly sized to accommodate both the main and service lines.
3. Mueller BR 2B Series, or approved equal.

B. Corporation Stops
1. Corporation stops shall be brass, ball style. Inlets shall be AWWA Taper; outlet connection shall be compression having a positive indicator to avoid over-tightening.
2. Corporation stops shall be Mueller B-25008, or approved equal.

C. Curb Stops
1. Curb stops shall be brass, with compression connections having a positive indicator to avoid over-tightening . Curb stops shall be provided with a quarter turn check.
2. Corporation stops shall be Mueller B-25209, or approved equal.

D. Unions
1. Unions shall be 3-piece brass, with compression connections having a positive indicator to avoid over-tightening.
2. Unions shall be Mueller H-15403, or approved equal.

E. U-Branch, Wyes, Etc.

1. U-branch, wye and other fittings shall be brass, with compression connections having a positive indicator to avoid over-tightening. Fittings shall be produced specifically for water supply applications.
2. Mueller or approved equal.

F. CHLORINE
1. Calcium hypochlorite tablets or granuels. Calcium hypochlorite product shall meet all applicable AWWA and NSF standards for use as a watermain disinfectant.
2. Arch "HTH", or approved equal.

G. PIPE JOINT LUBRICANT
1. Petroleum free pipe lubricant formulated for use with potable water systems. Product shall meet the requirements of ANSI/NSF Standard #61.

## PART 3 - E X E C U T I O N

### 3.1 GENERAL

A. Complete exploratory excavations at utility crossings as shown on the plans and as necessary to complete the work.

B. Maintain clearances between watermains and existing or proposed sewer lines as follows:
1. 8' horizontal separation (measured center to center) between watermains and existing or proposed sanitary or storm sewers.
2. 6" vertical separation (measured from outsides of pipes) where watermains cross over sanitary or storm sewers.
3. 18' vertical separation (measured from outsides of pipes) where watermains cross under sanitary or storm sewers.

C. Notify the Owner's Construction Representative of utility conflicts as soon as they are encountered.

D. Store and handle pipe in accordance with manufacturers recommendations. Keep pipes clean of soil, debris and animals.

### 3.2 CONTINUITY OF EXISTING WATER DISTRIBUTION SYSTEM

A. Provide a construction schedule to Owner's Construction Representative, municipal water utility (if applicable) and local fire department (if applicable) for review and approval prior to starting construction. Schedule shall indicate the date and time of all required water supply interruptions.

B. Do not interrupt existing water supply without approval from Owner's Construction Represenative, municipal water utility, and local fire department.

C. Once approved, notify all distribution system users impacted by outages a minimum of 48 hours in advance of outage. Notification shall be provided in writing and describe the nature and duration of outages, and provide the name and number of Contractor's foreman or other contact.

D. Watermain construction shall be completed in a manner that minimizes interruptions to existing services.

## 3.3 CONNECTIONS TO EXISTING WATERMAINS/TAPPING

A. Connect to existing watermains at the locations shown on the plans. Unless otherwise shown on the plans, connections shall be made by "live tapping" the main. Contractor shall provide all materials and labor required to complete the "live tap".

B. Provide tapping sleeves, valves, cutting-in sleeves and other materials specifically manufactured for use with the type of pipe to which the connection is being made.

C. Notify the Owner's Construction Repressentative if the proposed point of connection is located within 4' of an existing joint.

D. Whenever possible, connections shall be made at existing pipe stubs, valves or other fittings.

E. When connecting to existing mains, locate the proposed valve as close to the existing main as possible. Swab the interior surfaces of all pipe, fittings, valves that will be exposed to the existing system. Swab solution shall consist of a 5% (by weight) solution of calcium hypochlorite.

## 3.4 BEDDING AND INITIAL COVER

A. Provide bedding and initial cover in accordance with the applicable requirements of Section 31 23 16.13 – Trenching.

B. Watermain and water service piping shall be provided with 4" of bedding material and 12" of initial cover material (both measured at the bell of the pipe).

C. Bedding and cover material for various types of pipe shall consist of the following:
   1. Ductile Iron Watermain: Bedding sand or crushed stone screenings.
   2. PVC Watermain: Crushed stone bedding.
   3. Copper Water Services: Bedding sand or crushed stone screenings.

D. LAYING WATERMAIN

E. Install watermain at locations and depths shown on the plans.

F. Provide a minimum of 6.5' of cover over watermain, unless otherwise shown on the drawings or directed by the Owner's Construction representative. For watermains with less than 6.5' of cover, provide insulation as shown on the drawings, or as directed by the Owner's Construction Representative.

G. Check watermain grades regularly using rotating level or other accurate method. Lay watermain at uniform grades between deflection points shown on the plans; do not install watermains with intermediate high points.

H. Unless otherwise shown or approved by the Owner's Construction Representative, lay pipe with bell end facing the direction of pipe laying.

I. For ductile iron watermain, place polyethylene encasement bag on watermain prior to lowering into trench. Once pipe is joined, pull bag over entire length of pipe, overlap joint at adjacent pipe and secure using "Duct" tape or other approved method.

J. Prepare pipe bell and gasket in accordance with manufacturers requirements. Lubricate bell and/or pipe with AWWA/NSF approved lubricant.

K. Push pipe home in accordance with manufacturer's recommendations regarding tools and methods.

L. Pipe joint deflection shall not exceed manufacturer's requirements.

M. For ductile iron pipe, connect bonding straps or lugs to provide electrical continuity along entire watermain. Provide exothermic weld to attach new bonding straps, when existing straps are missing or damaged. Follow manufacturer's requirements for exothermic welding proceedures.

N. Disinfect pipe by placing calcium hypochlorite in each section of pipe as pipelaying progresses. Provide dosage as indicated on Table 02530-1.

| Watermain Nominal Diameter (inches) | Dose Calcium Hypochlorite* (oz/length pipe) |
|---|---|
| 4-6 | 1 |
| 8 | 3 |
| 10 | 5 |
| 12 | 7 |

O. Granular/tablet calcium hypochlorite with 68% (weight) available chlorine Table 02530-1

P. When required, provide installation in the thickness and width shown on the drawings. Unless otherwise shown, insulation shall be provided at a minimum thickness of 2".

Q. Install insulation on compacted initial cover material 6" above the top of pipe. Stagger joints when placing multiple layers of insulation.

R. Provide insulation with a minimum of 1' of initial cover material. Place backfill material in manner that does not damage insulation; replace damaged insulation.

S. Mark the location of dead-end mains with an 8' long 4x4 timber and steel "U" fence post.

## 3.5 INSTALLING FITTING SAND VALVES

A. Install fittings, valves and hydrants at locations shown on the drawings.

B. Unless otherwise shown, provide mechanical joint connections. Install materials in accordance with manufacturer's recommendations.

C. Maintain electircal continuity through all fittings, valves and hydrants. Provide and install suitable jumper cables for epoxy coated valves.

D. Place hydrants and valves on 4"x8"x16" solid concrete masonry units set on compacted soil.

E. Install joint restraints in accordance with the requirements of this section.

F. Install valve box so that bonnet rests on compacted initial backfill material at the same elevation as the top of the valve stuffing box. Center the valve box over the valve nut.

G. Install valve box plumb and level, backfilling evenly. Extend valve box to proposed final grade; provide valve box extensions as necessary. Valve boxes that shift during backfilling or restoration shall be excavated and re-set.

H. Mark all valve boxes with a steel "U" fence post to protect them from damage.

I. Install hydrants at elevation shown on plans or as required to provide a minimum of 6.5' cover over the hydrant lead.

J. Place approximately ½ cy of clear stone bedding material from the base of the hydrant to 6" above the drain holes on the hydrant elbow. Cover clear stone material with a "skirt" of polyethylene encasement bag material to prevent backfill material from migrating into the clear stone.

K. Install hydrant plumb and level, backfilling all sides evenly.

L. Cover all new hydrants with a plastic garbage bag or similar cover until the main has been filled and placed in service.

## 3.6 INSTALLATION OF COPPER WATER SERVICES AND BRASS FITTINGS

A. Connect copper water service piping to watermain, wellhouse, or other supply as shown on the drawings.

B. Watermain taps shall be made under pressure using a tapping machine specifically designed to tap and install corporation stops. Dry watermain taps are not allowed.

C. Service saddles shall installed on services where the corporation stop is 1 ½" nominal diameter or greater.

D. Provide a horizontal offset adjacent to the main for all copper services. Comply with pipe manufacturer's requirements with respect to minimum radius on bends.

E. Install curb stops as shown on the drawings. If specific curb stop location is not shown on the plans, consult with Owner's Construction Representative to determine acceptable location prior to installing.

F. Place curb stop box on a 4"x8"x8" solid concrete masonry unit set on compacted ground. Orient box so that no portion of the box bears on the water service or curb stop.

G. Install curb stop box plumb and level, backfilling evenly. Extend curb stop box to proposed final grade; provide extensions as necessary. Curb stop boxes that shift during backfilling or restoration shall be excavated and re-set.

H. Mark all curb stop boxes with a steel "U" fence post to protect them from damage.

I. Install copper water service as shown on the drawings. Limit the number of water service joints, using full lengths of pipe whenever possible.

J. Prepare copper pipe joints in accordance with pipe and fitting manufacturer recommendations. Cut pipe squarely, remove burs and round ends as necessary.

K. Install fittings in accordance with manufacturers recommendations. Torque compression connections to recommended tightness; do not over-tighten compression joints.

L. Provide dead-end copper water services with compression connectors fitted with plugs. Do not tap the ends of copper water services shut. Mark the location of dead-end services with an 8' long 4x4 timber and steel "U" fence post.

## 3.7 FILLLING WATERMAIN

A. Fill watermain after main has been installed and completely backfilled.

B. Fill main slowly to limit entrapped air and evenly distribute calcium hypochlorite. Open all hydrants completely to allow air to escape and monitor filling.

C. Once main is full, allow a minimum of 48 hours time for disinfection to occur before flushing.

## 3.8 PRESSURE TESTING

A. Pressure test all watermain and copper water services.

B. Provide all valves fittings, joint restraints, hoses, compressors, and water and power supply as necessary to complete pressure testing. Utilize testing apparatus that is fabricated specifically for testing watermains. Calibrate pressure gauges as necessary.

C. Flush main as necessary to remove air prior to testing. Comply with the requirements of this section with respect to flushing.

D. For longer installations or installations consisting of watermain and copper water service, the Contractor may elect to pressure test the system in short segments.

E. All pressure testing shall be conducted in the presence of the Owner's Construction Representative. Provide minimum of 48 hours advanced notice of testing.

F. Conduct a combined pressure/leakage test for 1 hour at a pressure equal to 150% of system normal operating pressure (as measured at the lowest point in the system), or a minimum pressure of 150 psig.

G. When conducting test, pressure test equipment shall be set-up as close to the highest point in the line as possible.

H. Make-up water for the test shall be clean potable water suplemented with ½ oz of dry calcium hypochlorite per 35 gallons of water.

I. Leakage for test shall not exceed gallons per hour as allowed by the attached formula:

$$G = (ND\sqrt{P})/7400$$

Where: G= Allowable leakage (gallons per hour of test)
N=Number of joints under test
D=Nominal diameter of main (inches)
P=Average pressure during test (psig)

J. Record and document pressure test by recording the following information:
1. Date of test
2. Section tested
3. Diameter and length of main under test
4. Number of fittings, valves hydrants, etc.
5. Results of test including test length, pressure, actual water loss
6. Calculation of allowable leakage
7. If a failed test, describe actions taken to eliminate leaks and results of re-testing

K. Submit reports documenting pressure testing.

## 3.9 CONTINUITY TESTING

A. At the request of the Owner's Construction Representative, conduct continuity test on all ductile iron watermain and copper water services.

B. The continuity test shall be performed using an multi-meter to verify electrical continuity of the watermain system.

C. The Contractor shall furnish all labor and equipment necessary to conduct the continuity test.

D. Document continuity testing by recording the following information:
   1. Date of test
   2. Test methods and equipment
   3. Section tested
   4. Diameter and length of main under test
   5. Number of fittings, valves hydrants, etc.
   6. Results of test including resistance
   7. If a failed test, describe actions taken to eliminate leaks and results of re-testing

E. Submit reports documenting continuity testing.

## 3.10 DISINFECTION/FLUSHING

A. After filling the main, allow a minimum of 48 hours time for disinfection to occur before flushing.

B. Flush all sections of watermain and water service. When possible, utilize hydrants or other large diameter orifices to complete flushing and achieve 2.5 fps water velocity. If needed, utilize services or temporary connections to complete flushing.

C. All watermain and services shall be flushed for a minimum of 10 minutes, or as necessary to obtain a sediment-free and bacteriologically safe sample.

D. Utilize diffusers, hoses, settling basins and other devices as necessary to limit erosion and other damage to the site and downstream areas.

E. Contractor shall be responsible for providing all necessary fitting, valves, joint restraints, hydrants and other materials necessary to conduct flushing.

F. Submit reports documenting disinfection and flushing.

## 3.11 BACTERIOLOGICAL SAMPLE

A. Following all pressure testing and flushing, the contractor shall collect a sample from the newly installed watermain or water service(s). Samples shall be submitted to the State Laboratory of Hygiene, or other licensed testing laboratory for bacteriological (colliform bacteria) analysis.

B. The Contractor shall be responsible for all costs associated with sample collection(s) and analysis.

C. Document bacteriological sample collection and analysis by recording the following information:
   1. Date of sample collection
   2. Sample collection methods and equipment
   3. Person collecting the sample
   4. Location(s) sample was collected

5. Results of sample analysis

D. If sample results indicate water is “Unsafe – Colliform Bacteria Present”, Contractor shall re-disinfect watemain and water services by introducing additional chlorine into the line and re-flushing the main. This process shall be repeated as necessary until a clean sample is obtained. The Contractor shall be responsible for all costs associated with all efforts necessary to obtain a “Safe – Coliform Bacteria Not Present” sample.

E. Submit reports documenting bacteriological sample collection and analysis.

F. CONSTRUCTION VERIFICATION

G. Contractor is responsible for utilizing the construction verification checklists supplied under specification Section 33 08 00 in accordance with the procedures defined for construction verification in Section 01 91 01 or 01 91 02.

END OF SECTION 331100

# SECTION 33 30 00
# SANITARY SEWERAGE UTILITIES

## PART 1 - G E N E R A L

### 1.1 SCOPE

A. The work under this section shall consist of providing all work, materials, labor, equipment, and supervision necessary to provide for the sanitary sewer work required in these specifications and on the drawings. The limits of the work, including the responsible party for testing purposes, shall be clearly defined on the Drawings.

### 1.2 RELATED WORK

A. Applicable provisions of Division 1 govern work under this section.

B. Related work specified elsewhere:
1. Section 22 11 00 – Facility Water Distribution
2. Section 22 13 00 – Facility Sanitary Sewerage
3. Section 31 25 00 – Erosion Control

### 1.3 REFERENCE DOCUMENTS

A. Where reference is made to the “SSSWC”, it shall mean pertinent sections of the Standard Specifications for Sewer and Water Construction in Wisconsin, current edition. Method of measurement and basis of payment sections in referenced documents shall not apply.

B. Where these specifications do not cover portions of the work to be undertaken, the Standard Specifications for Sewer and Water Construction in Wisconsin, current edition, shall govern the work.

### 1.4 REFERENCE STANDARDS

A. American Society for Testing and Materials (ASTM) International:
1. C425 Standard Specification for Compression Joints for Vitrified Clay Pipe and Fittings
2. C700 Standard Specification for Vitrified Clay Pipe, Extra Strength, Standard Strength, and Perforated
3. D1784 Standard Specification for Rigid Poly(Vinyl Chloride) (PVC) Compounds and Chlorinated Poly(Vinyl Chloride) (CPVC) Compounds
4. D2235 Standard Specification for Solvent Cement for Acrylonitrile-Butadiene-Styrene (ABS) Plastic Pipe and Fittings
5. D2564 Standard Specification for Solvent Cements for Poly(Vinyl Chloride) (PVC) Plastic Piping Systems
6. D2680 Standard Specification for Acrylonitrile-Butadiene-Styrene (ABS) and Poly(Vinyl Chloride) (PVC) Composite Sewer Piping
7. D3034 Standard Specification for Type PSM Poly(Vinyl Chloride) (PVC) Sewer Pipe and Fittings
8. D3212 Standard Specification for Joints for Drain and Sewer Plastic Pipes Using Flexible Elastomeric Seals
9. D3350 Standard Specification for Polyethylene Plastics Pipe and Fittings Materials
10. D4673 Standard Classification System for Acrylonitrile-Butadiene-Styrene (ABS) Plastics and Alloys Molding and Extrusion Materials

11. F477 Standard Specification for Elastomeric Seals (Gaskets) for Joining Plastic Pipe
12. F679 Standard Specification for Poly(Vinyl Chloride) (PVC) Large-Diameter Plastic Gravity Sewer Pipe and Fittings

B. American Water Works Association (AWWA):
1. C104/ANSI A21.4 Standard for Cement-Mortar Lining for Ductile-Iron Pipe and Fittings
2. C151/ANSI A21.53 Standard for Ductile Iron Pipe, Centrifugally Cast
3. C153/A21.53 Standard for Ductile Iron Compact Fittings

## 1.5 SUBMITTALS

A. Provide manufacturer's product information (cut sheets), shop drawings and O&M information for sewer materials including:
1. Pipe
2. Fittings
3. Pre-Cast and Cast-in-Place Structures
4. Castings and Covers

B. Provide wastewater diversion and pumping plan.

C. Provide reports documenting all required testing and televising. testing results for the project to the Owners Project Representative and the Engineer within 48 hours of completing the individual tests.

## 1.6 PROVISIONS FOR FUTURE WORK

A. Construct sanitary sewer system in a manner that will facilitate future extension or connection.

B. When drawings indicate future connection at a manhole or other structure, install a full length of pipe beyond the structure, providing plugged bell at terminal end of pipe. Provide marker board at terminal end of stubbed pipe.

## 1.7 AS-BUILT DRAWINGS

A. Show the actual locations of sanitary sewer pipes and service lines, manholes and cleanouts on drawings. Show changes to proposed sanitary sewer pipe, alignment, or grades. Show the actual locations, sizes and types of underground utilities and other features encountered during construction.

# PART 2 - M A T E R I A L S

## 2.1 PVC PIPE

A. Conform to ASTM D-3034 with solvent weld or elastomeric joints. Pipe shall be SDR-35, unless otherwise noted. Pipe over 15 inches in diameter shall meet the requirements of ASTM F679-03. Do not mix different manufacturer's products, or fittings.

B. PVC fittings shall be same joint type and SDR as connecting PVC sanitary sewer pipe.

## 2.2 HDPE PIPE

A. Polyethylene Resin

1. Polyethylene resin used for manufacturing piping and fittings shall meet ASTM D1248 for Type III, Class C, Grade P34, Category 5, with a PPI recommended designation of PE3408 and a minimum cell classification of PE 345434C in accordance with ASTM D3350. The polyethylene compound shall be combined with carbon black to provide protection against degradation by ultraviolet light. Pipe shall be made from virgin material with no rework compound, except that obtained from the manufacturer's own production of the same formulation.

B. Polyethylene Piping

1. High density polyethylene (HDPE) piping, shall meet the requirements of AWWA C906, current version. Pipe dimensions and workmanship shall be in accordance with ASTM F714 and ASTM D2122. Pipe shall be of diameter shown on the drawings, with dimension ratio (DR) of DR11, unless otherwise noted.

C. Pipe, fittings, and joints shall meet or exceed the following physical properties:

| PROPERTY | ASTM TEST METHOD | VALUE |
|---|---|---|
| Density, gm/cc | D1505 | 0.955 |
| Melt Index, gm/10 min | D1238-E | 0.10 |
| High Load Melt Index, gm/10 min | D1238-F | 12.0 |
| Tensile Strength @ Break, psi | D638 | 4,500 |
| Tensile Strength @ Yield, psi | D638 | >3,200 |
| Elongation, % | D638 | >800 |
| Flexural Modulus, psi | D790 | 136,000 |
| Environmental Stress Cracking Resistance $F_{20}$' Hours (100°C) | D1693 (Cond. C) | >5,000 |
| Brittleness Temperature, °F | D746 | <-180 |
| Melting Point, °F | D789 | 261 |
| Vicat Softening Temperature, °F | D1525 | 255 |
| Hardness, Shore D | D2240 | 66 |
| Volume Resistivity, ohm-cm | D991 | $2.6\ 10^{16}$ |
| Recommended Hydrostatic Design Stress: | | 1600 psi @ 73.4°F<br>800 psi @ 140°F |

D. Pipe Marking

1. Each length of straight and special HDPE pipe and each HDPE fitting shall be plainly marked on the outside to identify the design pressure or class of pipe, proper location of the pipe or fitting in the pipeline, and the date of manufacture.

## 2.3 DUCTILE IRON WATERMAIN

A. Ductile watermain shall be Class 52, ANSI/AWWA C151/A21.51centrifugally cast, cement mortar lined meeting the requirements of ANSI/AWWA C104/A21.4.

B. Ductile iron watermain joints shall be rubber gasket push-on joint or mechanical joint meeting the requirements of ANSI/AWWA C111/A21.11.

C. Pipe shall be provided with conductive bonding straps to provide electrical continuity.

D. Pipe shall be manufactured in the United States.

## 2.4 CONNECTIONS FOR DISSIMILAR PIPE MATERIALS

A. Where new sewer connects to and existing dissimilar pipe, the connection shall be made with a no hub type coupling meeting the requirements of CISPI 310.

B. Couplings shall have neoprene gaskets with stainless steel shield, and multiple stainless steel clamps with worm gear tightening device. The couplings shall be made specifically for the type and size of pipe materials being connected.

C. Couplings shall be Fernco, Husky, or approved equal.

## 2.5 BOARD INSULATION

A. Insulation shall be rigid, closed-cell extruded polystyrene insulation suitable for buried insulation. Individual boards shall have dimensions of 8’x4’x2”.

B. Owens Corning, Dow Styrofoam, or approved equal.

## 2.6 TRACER WIRE

A. Tracer wire shall be #10 solid copper wire with green insulated jacket.

## 2.7 LOCATOR TAPE

A. Tape shall be detectable metallic locator tape, specifically manufactured for marking utilities with a minimum width of 6 inches and detectable at a depth of 18”.

B. Tape shall be marked “SEWER” and green colored.

# PART 3 - E X E C U T I O N

## 3.1 GENERAL

A. Complete exploratory excavations at utility crossings as shown on the drawings and as necessary to complete the work.

B. Maintain clearances between existing or proposed sewer lines and watermains as follows:

C. 8’ horizontal separation (measured center to center) between existing or proposed sanitary or storm sewers and watermains.

D. 12” vertical separation (measured from outsides of pipes) where watermains cross over sanitary or storm sewers.

E. 18” vertical separation (measured from outsides of pipes) where watermains cross under sanitary or storm sewers.

F. Notify the Engineer and Owner of utility conflicts as soon as they are encountered.

G. Store and handle pipe in accordance with manufacturers' recommendations. Keep pipes clean of soil, debris and animals.

## 3.2 DIVERTING SEWAGE

A. Tributary buildings and services will remain occupied during construction. Wastewater will continue to be discharged to the sanitary sewers during construction. Contractor shall provide, operate and maintain all diversion and pumping equipment necessary to carry out the work and allow wastewater to continue to be discharged to the sanitary sewer system. Provide all necessary generators or other power source necessary to operate pumps on a continuous basis. Extra pumping and power equipment shall be staged onsite to maintain sewage diversion in the event of failure of the primary pumping equipment. The Contractor is solely responsible for sewage diversion.

## 3.3 DIVERSION PLAN

A. Contractor shall provide a wastewater diversion and pumping plan indicating the order and schedule for completion of the work and associated diversion provisions. The plan shall indicate the location of proposed diversion, pipe size and type, discharge locations, and the type and size of pumping equipment to be used. The plan shall describe contingencies to be used in the event of failure of the primary pumps. Contractor's diversion plan is subject to Owner's approval prior to implementation.

## 3.4 LAYING PIPE

A. Install pipe in accordance with the SSSWC and ASTM specifications that pertain to the specified type of pipe material and the installation situation.

B. Do not use pipe or fittings that are cracked or contain defects.

C. Clean all pipe of any dirt and/or debris both inside and outside prior to placing in the trench.

D. Make joints in accordance with manufacturer's directions with due care to avoid damaging pipe and/or disturbing previously laid pipe.

E. Cut pipe only according to manufacturer's directions.

F. Lay all sewer pipes to horizontal alignment and grade shown on the drawings with bell ends up hill. Establish and maintain horizontal alignment. Discrepancies from the required horizontal alignment or grade at any location shall not be greater than 0.10' or 0.05', respectively.

## 3.5 BEDDING/UTILITY COVER

A. Provide Crushed Stone Bedding shall be used for both bedding and utility cover in accordance with the applicable requirements of Section 31 23 16.13 – Trenching.

B. Where excavation extends below the bottom of the structure's base or the trench, bring the excavation to the required elevation by the use of compacted Crushed Stone Bedding.

C. A minimum of 8" of compacted Crushed Stone Bedding shall be placed below manhole base.

D. A minimum of 6" of compacted Crushed Stone Bedding shall be placed below the sanitary sewer pipe and 12" of cover material shall be placed over the sanitary sewer pipe (both measured at the bell of the pipe).

## 3.6 CONNECTIONS TO EXISTING STRUCTURES

A. Make all necessary openings into existing structures or sewers including the reconstruction of existing inverts or benches, as necessary. Patch all openings permanently watertight with hydraulic cement and flexible watertight boots.

## 3.7 SEWER LATERALS

A. Connect existing sewer laterals in accordance with all of the requirements of the sewer mains, including bedding, backfill, compaction, and jointing of the pipe. Connect sewer laterals to the sewer main by means of an approved "wye" fitting. Connect the new pipe to the existing lateral material using a no-hub coupling or approved transition fitting. Coupling/fitting shall be selected for the specific pipe material being connected.

B. Subject to local municipality requirements, cut-in type saddle wyes are permitted on existing sanitary sewers where service laterals are to be connected to the sewer. Unless otherwise indicated, the saddle fitting shall be gasketed PVC, with stainless steel bands and hardware.

## 3.8 PIPE INSULATION

A. Provide board insulation where indicated on drawings or where depth of cover is less than 6 feet.

B. Install insulation on compacted utility cover material, 6” above the top of the pipe. Stagger joints where more than one layer of insulation is required. Provide insulation with a minimum of 1’ of utility cover material. Place cover and backfill material in manner that does not damage insulation; replace any damaged insulation.

## 3.9 TRACER WIRE

A. Provide tracer wire for buried non-metallic sewer piping. Tracer wire shall be installed directly above the top of pipe and within six inches of the pipe.

B. Splices in tracer wire shall be made with split-bolt or compression-type connectors.

C. Access points are required every 400 feet or closer. At access points the tracer wire shall be brought to grade with manholes or other covered access devices.

## 3.10 LOCATOR TAPE

A. Install locator tape directly above new non-metallic sanitary sewer pipe approximately 15 inches below finished grade. Bring tape to surface and terminate in valve box or other structure.

## 3.11 DEFLECTION TESTING

A. Test all PVC sewer pipe in the presence of the Owner’s Project Representative by a "go-no-go" deflection test mandrel furnished by the Contractor. Do not perform deflection testing any sooner than 30 days following the installation of the PVC pipe. Pull the mandrel by hand, or hand operated winch so as to avoid any damages to the pipe that may be caused by mechanized pulling equipment.

B. Size the mandrel to test the pipeline for a maximum allowable internal deflection of the pipe (in any direction) of not to exceed five (5) percent of the original internal diameter for the pipelines tested, regardless of how long after installation the testing takes place.

C. Deflection testing may be done concurrently with any necessary televising of the sewers. When done concurrently with sewer televising, the mandrel may be pulled by mechanized equipment, provided the mandrel is visible in the television picture during the testing and the operation of the mandrel can be quickly halted before damage to the pipe occurs.

D. Where poor trench soils conditions require the pipe excavation to be undercut and/or over excavated, the Owner’s Construction Representative reserves the right to require an additional deflection test prior to the expiration of the Contractor's one year performance guarantee.

E. Remove and replace all pipe that fails to pass the five (5) percent vertical deflection testing until the pipe passes the deflection test.

## 3.12 LEAKAGE TESTING

A. All new sanitary sewer lines shall be leakage tested in accordance with Chapter 3.7.0 of the SSSWC.

## 3.13 SEWER TELEVISING

A. Upon completion of the sewer construction all new sewers shall be televised to provide a record of the actual conditions inside the newly constructed sewers via closed circuit televising equipment. The Owner’s Project Representative may or may not be present during sewer inspections via this method.

B. Utilize televising equipment with a color camera specially designed and equipped for the conditions of the sewers to be televised, and with a monitor screen.

C. Transport the camera equipment through the sewers by means of mechanical or hand operated winches, coordinated to provide speed and directional control necessary to fully observe the sewer interior. Provide a light source for the necessary illumination.

D. Provide televising equipment equipped with an on-screen distance meter, capable of registering distances in the sewer from the starting manhole, and accurate to the nearest 0.5’ station, so as to facilitate in the locating of sewer features and/or defects from the ground surface.

E. Provide televising equipment with an on-screen date and time clock, so as to permit the verification of the date and time of the television inspection.

F. All video files of the sewer inspection shall contain audio notes describing the sewer location, direction of inspection, and a description of any pertinent features observed during the televised inspection (service locations, leaking or faulty joints, debris in the line, offset joints, etc.). In addition, record this information on a written log or record, in a format of the Contractor's choosing.

G. The Contractor shall provide to the Owner’s Project Representative with 1 DVD copies of the CCTV inspection videos and all inspection forms.

3.14 ABANDON SEWER

A. Existing sewer that is no longer in service, but is left in place shall be abandoned in accordance with Section 3.2.24 of the SSSWC. Sewer shall not be abandoned until existing services have been reconnected to the replacement sewer.

END OF SECTION 333000

# SECTION 33 40 00
# STORM DRAINAGE UTILITIES

## PART 1 - GENERAL

### 1.1 SCOPE

A. The work under this section shall consist of providing all work, materials, labor, equipment, and supervision necessary to provide for the storm sewer work required in these specifications and on the drawings. This specification shall apply to all storm sewer work beginning at a point 5' outside of the building wall, unless otherwise specified. Included are the following topics:

### 1.2 RELATED WORK

A. Section 31 25 00 – Erosion Control

### 1.3 REFERENCE

A. Applicable provisions of Division 1 shall govern all work under this section.

### 1.4 REFERENCE STANDARDS

A. Where these specifications do not cover portions of the work to be undertaken, the Standard Specifications for Sewer and Water Construction in Wisconsin, current edition, shall govern the work.

B. American Society for Testing and Materials (ASTM):
1. C76-05b Standard Specification for Reinforced Concrete Culvert, Storm Drain, and Sewer Pipe
2. C425-04 Standard Specification for Compression Joints for Vitrified Clay Pipe and Fittings
3. C443-05a Standard Specification for Joints for Concrete Pipe and Manholes, Using Rubber Gaskets
4. C507-05a Standard Specification for Reinforced Concrete Elliptical Culvert, Storm Drain, and Sewer Pipe
5. C700-05 Standard Specification for Vitrified Clay Pipe, Extra Strength, Standard Strength, and Perforated
6. C877-02e1 Standard Specification for External Sealing Bands for Concrete Pipe, Manholes, and Precast Box Sections
7. D1784-03 Standard Specification for Rigid Poly(Vinyl Chloride) (PVC) Compounds and Chlorinated Poly(Vinyl Chloride) (CPVC) Compounds
8. D2235-04 Standard Specification for Solvent Cement for Acrylonitrile-Butadiene-Styrene (ABS) Plastic Pipe and Fittings
9. D2564-04 Standard Specification for Solvent Cements for Poly(Vinyl Chloride) (PVC) Plastic Piping Systems
10. D2680-01 Standard Specification for Acrylonitrile-Butadiene-Styrene (ABS) and Poly(Vinyl Chloride) (PVC) Composite Sewer Piping
11. D3034-04a Standard Specification for Type PSM Poly(Vinyl Chloride) (PVC) Sewer Pipe and Fittings
12. D3212-96a(2003)e1 Standard Specification for Joints for Drain and Sewer Plastic Pipes Using Flexible Elastomeric Seals
13. D3350-05 Standard Specification for Polyethylene Plastics Pipe and Fittings Materials

14. D4673-02 Standard Classification System for Acrylonitrile-Butadiene-Styrene (ABS) Plastics and Alloys Molding and Extrusion Materials
15. F477-02e1 Standard Specification for Elastomeric Seals (Gaskets) for Joining Plastic Pipe
16. F679-03 Standard Specification for Poly(Vinyl Chloride) (PVC) Large-Diameter Plastic Gravity Sewer Pipe and Fittings

C. American Water Works Association (AWWA):
1. C104/ANSI A21.4-95 Standard For Cement-Mortar Lining for Ductile-Iron Pipe and Fittings for Water
2. C111/A21.11-00 Rubber-Gasket Joints for Ductile-Iron Pressure Pipe and Fittings
3. C151/ANSIA21.53-00 Standard for Ductile Iron Pipe, Centrifugally Cast for Water or Other Liquids

D. American Association of State Highway and Transportation Officials (AASHTO)
1. AASHTO M252 Corrugated Polyethylene Drainage Pipe
2. AASHTO M294 Corrugated Polyethylene Pipe, 12- to 48-in Diameter

## 1.5 SUBMITTALS

A. Provide manufacturers product information (cut sheets), shop drawings and O&M information for storm sewer materials including:
1. Pipe
2. Fittings
3. Structures
4. Castings

B. Provide reports documenting any required testing.

C. Provide copies of record drawings.

## 1.6 PROVISIONS FOR FUTURE WORK

A. Construct sewer system in a manner that will facilitate future extension or connection.

B. Review plans prior to installation, and notify Engineer or owner if proposed design does not appear to accommodate future extension or connection.

C. When drawings indicate future connection at a manhole or other structure, install a full length of pipe beyond the structure, providing plugged bell at terminal end of pipe. Provide marker board at terminal end of stubbed pipe.

## 1.7 RECORD DRAWINGS

A. Refer to General Requirements.

B. Maintain record drawings that show the actual locations, sizes and types of utilities and other features encountered.

C. Note any modifications to proposed sewer system size, location or elevation. Record any other deviations from the drawings.

## PART 2 - MATERIALS

### 2.1 GENERAL

A. Conform all materials to the size and type shown on the plans or as called for in the specifications and to applicable Laws, Codes, and Ordinances.

B. All products and materials are to be new, undamaged, clean, and in good condition. Existing products and materials are not to be reused unless specifically indicated.

C. Be responsible for the safe storage and handling of all materials utilized in the work. Store all materials in areas designated by the Construction Representative in cooperation with the Owner.

D. Perform all work in accordance with any applicable manufacturer's instructions.

### 2.2 PIPE

A. Provide the size, type and class/schedule of pipe as indicated on the drawings.

B. Use only pipe supplied from the same manufacturer, and of the same type, unless otherwise specified or approved in advance by the Engineer.

C. When applicable, only pipe, joints, material and installation approved by Wisconsin Department of Natural Resources and/or the Department of Safety & Professional Services for the intended use in the State of Wisconsin shall be used.

### 2.3 REINFORCED CONCRETE PIPE

A. Pipe and fittings shall conform to ASTM C-76 for circular pipe and ASTM C-507 for elliptical pipe. Unless otherwise specified, provide Class III for circular pipe and Class HE-III for elliptical pipe.

B. Joints for reinforced concrete pipe shall be bell and spigot or tongue and groove. Joints shall be provided with rubber gaskets conforming to ASTM C433. Joints for elliptical pipe shall be provided with trowelable impervious bituminous joint sealer that is manufactured for sealing reinforced concrete sewer pipe joints.

C. When required, external sealing bands shall meet the requirements of ASTM C877 (Type II), and shall be Mar Mac Mac Wrap, or approved equal.

### 2.4 HDPE SOLID WALL PIPE

A. Conform to ASTM D-3350 for PE material with a cell classification of 335434C or better. Pipe shall be SDR 11, unless otherwise noted. Joints shall be thermal butt fusion in accordance with the manufacturer’s recommendation.

### 2.5 CONNECTIONS FOR DISSIMILAR PIPE MATERIALS

A. Where new sewer connects to and existing dissimilar pipe, the connection shall be made with a no hub type couplings meeting the requirements of CISPI 310. Couplings shall have neoprene gaskets with stainless steel shield, and multiple stainless steel clamps with worm gear tightening device. The

couplings shall be made specifically for the type and size of pipe materials being connected. Couplings shall be Fernco Husky or approved equal.

## 2.6 MANHOLES

A. General
1. Provide precast concrete manholes unless otherwise shown or required. Concrete block or cast-in-place manholes may only be used after receiving written approval by the owner and the A/E for customized manhole sizes and shapes.
2. Submit manufacturer's preproduction (shop) drawings for approval prior to the start of manufacturing.
3. Contractor shall carefully locate all pipe locations, sizes, orientation and elevation prior to ordering new manholes. For sewer re-lays, verify if each pipe encountered is active. In- active pipe shall not be connected to the new sewer.
4. All new storm sewer connections to combined sewer systems must be trapped and built in accordance with State, City of Milwaukee, and/or MMSD standards.

B. Precast Manhole Sections
1. Precast concrete manhole sections, including bottom and top shall meet the requirements of ASTM C478.
2. Provide manholes of the diameter indicated on the drawings. If field conditions require a larger structure contact the Architect or Engineer.
3. For 4’ diameter manholes, provide eccentric cone top sections with a minimum clear opening of 24 inches. Flat top slabs may be used on manholes greater than 4’ in diameter – provide in-bell cover with offset 24” opening.
4. Manhole wall thickness shall be minimum of 5” for 4’ diameter manholes, 6” for 5’ diameter manholes and 7” for 6’ and 7’ diameter manholes.
5. Provide pre-cast manhole base. Manhole bottom section may be pre-cast with integral base.

C. Joints
1. Provide manhole riser and barrel sections, cones, and flat tops, with standard pipe section tongue and groove joints.
2. Seal joints watertight with prefabricated rubber or plastic gaskets or formed in place butyl rubber seal.
3. Joint sealers: Kent Seal, ConSeal, or approved equal.

D. Connections
1. Openings for connections in pre-cast structures shall be knock-outs or cut-outs. Cut-outs shall not extend into the joint of the bottom manhole section . Provide a minimum of 12” of separation between the edge of adjacent cut-outs or knock-outs.

E. Manhole Steps
1. Provide steps at 16 inches (400 mm) o.c.+ and project approximately 6” from wall.
2. Unless otherwise indicated on the drawings, locate manhole steps over the downstream pipe opening.
3. Manhole steps shall be steel reinforced polypropylene with ½-inch diameter deformed reinforcing bar. Steps shall be permanently secured in the manhole wall. Manhole steps shall be American Step Company, M.A. Industries or approved equal.

F. Bench and Flowline
1. Provide either pre-cast or cast-in-place bench and flowline.
2. Unless otherwise indicated on the drawings, bench height shall be 1/2 the diameter of the downstream pipe. Slope bench towards flowlines at a minimum ½” per foot. Provide light broom finish on bench.

3. Flowlines shall be formed with gradual, uniform sweeps directed towards the downstream pipe. Provide smooth, troweled finish for flowlines.

G. Adjusting Rings
1. Fiber-reinforced pre-cast concrete adjusting rings meeting the requirements of ASTM C-478. Provide rings of 2” or 4” thickness.
2. Precompressed butyl gasket, 3/8”x3 ½” shall be used between the top of the manhole and first adjustment ring, and between all subsequent rings. Butyl material shall be E-Z Stick, or equal.

## 2.7 ROUND CATCH BASINS

A. General
1. Round catchbasins shall be 30” inside diameter precast concrete unless otherwise shown or required.
2. Submit manufacturer's preproduction (shop) drawings for approval prior to the start of manufacturing.
3. Contractor shall carefully locate all pipe locations, sizes, orientation and elevation prior to ordering catchbasin.
4. Round catchbasins shall meet the requirements of ASTM C478.
5. Pre-cast catchbasin wall thickness shall be minimum of 4”.
6. Provide 6” thick pre-cast catchbasin base. Catchbasin bottom section may be pre-cast with integral base.
7. Catchbasins shall be provided with precast reinforced concrete concrete in-bell cover designed to accommodate AASHTO H20 loading. In-bell cover shall be provided with 24” opening for casting.

B. Joints
1. Catchbasins requiring separate base and riser sections, must be provided with standard pipe tongue and groove joints.
2. Seal joints watertight with prefabricated rubber or plastic gaskets or formed in place butyl rubber seal.
3. Joint sealers: Kent Seal, ConSeal, or approved equal.

C. Connections
1. Provide custom knock-outs/cut-outs based on project and location specific conditions.
2. A minimum of 2” of the precast structure is required between the top of a knock-out/cut-out and the top of the structure. A minimum of 2” of precast structure is required between the side of a knock-out/cut-out and the inside face of an adjacent sidewall.

D. Flowline
1. Provide either pre-cast or cast-in-place flowline that provides positive flow through the structure. Provide bench that directs water towards the flowline.
2. Flowlines and benches shall be formed with gradual, uniform sweeps directed towards the downstream pipe. Provide smooth, troweled finish for flowlines.

E. Adjusting Rings
1. Fiber-reinforced pre-cast concrete adjusting rings meeting the requirements of ASTM C-478. Provide rings of 2” or 4” thickness.
2. Precompressed butyl gasket , 3/8”x3 ½” shall be used between the top of the catchbasin and first adjustment ring, and between all subsequent rings. Butyl material shall be E-Z Stick, or equal.

## 2.8 CASTINGS

A. General
   1. All castings shall be heavy duty iron conforming to ASTM A48, Class 20 and rated for AASHTO H-20 loading. Provide non-rocking or machined castings with concealed pickhole.

B. Standard Manhole Frame and Casting (Open Grate)
   1. Neenah Foundry R-2502, with Type C grate; or approved equal.

## 2.9 LOCATOR TAPE

A. Detectable metallic locator tape, specifically manufactured for marking utilities.

B. Tape shall be a minimum of 6” wide and shall be marked “SEWER”.

# PART 3 - EXECUTI0N

## 3.1 NOTIFICATION

A. Contractor, prior to excavation work, shall notify all utilities, governmental agencies, or entities, known to, or which can reasonably be assumed to, have above or below ground pipe, conduit cables, structures or similar items within limits of project, to locate and mark location of such items. The Contractor shall expose potential pipe conflicts prior to installation of sewers to allow for any field changes to the design to be made.

## 3.2 LAYING PIPE

A. Install all pipe in accordance with ASTM specifications which pertain to the specified type of pipe material and the installation situation.

B. Do not use any pipe or fittings cracked in cutting or handling or otherwise not free from defects.

C. Clean all pipe of any dirt and/or debris both inside and out prior to placing in the trench.

D. Make joints in accordance with manufacturer's directions with due care to avoid damaging pipe and/or disturbing previously laid pipe.

E. Cut pipe only according to manufacturer's directions.

F. Lay all sewer pipes to horizontal alignment and grade shown on the plans with bell ends up hill. Establish and maintain horizontal alignment using total station, transit or theodolite. Use pipe laser or level to establish and maintain grade of pipe. Discrepancies from the required horizontal alignment or grade at any location shall not be greater than 0.10’ or 0.05’, respectively.

G. Do not exceed specified trench widths.

## 3.3 BEDDING/INITIAL COVER

A. Provide bedding and initial cover in accordance with the applicable requirements of State Standard Specifications.

B. Storm sewer and sewer services shall be provided with 4” of bedding material and 12” of initial cover material (both measured at the bell of the pipe). Crushed Stone Bedding shall be used for both bedding and initial cover.

## 3.4 STRUCTURES (MANHOLES, INLETS, ROUND CATCH BASINS)

A. Contractor shall determine the proper location, size, elevation, and orientation of all pipes entering new structures before ordering. Do not connect abandoned pipes to new structures. Structures having improper location and/or orientation of the pipe connections will be rejected. Field repairs or adjustments of connection points are not permitted.

B. Limit the excavation for structures so as to provide only the necessary amount of space to sufficiently prepare the subgrade, set the base, set the structure, and lay pipe. Provide a minimum of 1’ of clearance between structure and trench wall for adequate backfilling and compaction.

C. Where excavation occurs below the bottom elevation of the structure's base, bring the excavation to the required elevation by the use of compacted crushed stone bedding. A minimum of 8 inches of compacted Crushed Stone Bedding shall be placed below the bottom of the structure base.

D. Set structure base in accordance with elevation and location as indicated on the plans. Install base plumb and level. Install subsequent pre-cast sections in accordance with shop drawing layout. Provide watertight gaskets between each section.

E. Pour inverts with smooth surface draining to downstream pipe. Where two or more lines meet at an angle, provide curved channel. Slope bench or floor at 2 inches/ft towards flow channel.

F. Structures shall be provided with between 4” and 8” of adjusting rings, with the top adjusting ring being 2” thick. Provide butyl sealant material between rings. Once rings are in place, tuck point the exterior joint and provide the entire exterior surface of the adjusting ring riser with a coating of mortar.

## 3.5 CASTING INSTALLATION

A. Install casting type as indicated on the plans or in the specifications.

B. Provide butyl sealant material between last adjusting ring and casting base. Adjust casting elevation and slope to match adjacent proposed grades.

## 3.6 CONNECTIONS TO EXISTING STRUCTURES

A. Make all necessary openings into existing structures or sewers including the reconstruction of existing inverts or benches, as necessary. Patch all openings permanently watertight with concrete brick and mortar, hydraulic cement, or flexible watertight boots.

## 3.7 SEWER LATERALS

A. Connect existing sewer laterals in accordance with all of the requirements of the sewer mains, including bedding, backfill, compaction, and jointing of the pipe. Connect sewer laterals to the sewer main by means of an approved "wye" fitting. Connect the new pipe to the existing lateral material using a no-hub coupling or approved transition fitting. Coupling/fitting shall be selected for the specific pipe material being connected.

B. Subject to local municipality requirements, cut-in type saddle wyes are permitted on existing sanitary sewers where service laterals are to be connected to the sewer. Unless otherwise indicated, the saddle fitting shall be gasketed PVC, with stainless steel bands and hardware.

## 3.8 LOCATOR TAPE

A. Provide locator tape when indicated on the Drawings. Install locator tape approximately 2’ above the top of the pipe.

## 3.9 ABANDON SEWER

A. Where indicated on the plans, existing sewer to be left in place shall be abandoned in accordance with Section 3.2.24 of the Standard Specifications for Sewer & Water Construction. Sewer shall not be abandoned until existing services have been reconnected to the replacement sewer. Abandoning sewers is considered incidental to the construction.

END OF SECTION 334000

# LANDSCAPING

# PLANS

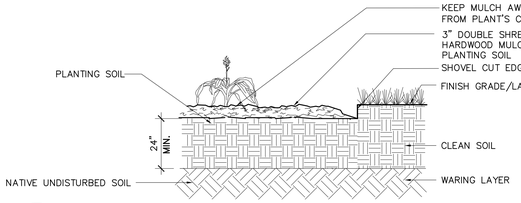


1 C120 SHOVEL CUT EDGE

NTS

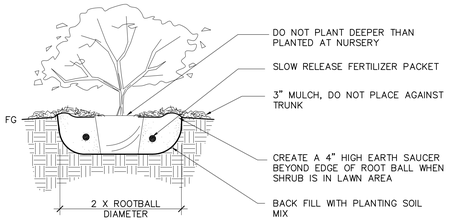


2 C120 POTTED/CONTAINER PLANTING DETAIL

NTS

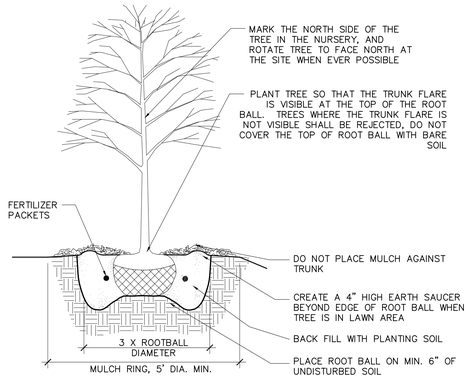


3 C120 B&B TREE PLANTING DETAIL

NTS

## LANDSCAPE DATA

OVERALL SITE AREA = 31,372 SF (.72 AC)
ZONING DESIGNATION = IM, INDUSTRIAL-MIXED

INTERIOR PARKING LOT LANDSCAPING REQUIREMENTS
PARKING LOT AREA = 9,919
REQUIRED LANDSCAPE AREA – 5% OF LOT AREA = 495 SF
PROPOSED LANDSCAPE AREA = 1,483 SF
PARKING SPACES TOTAL 28 / 8 = 3.5 x 2 = 7 TREES AND 7 SHRUBS REQUIRED
TOTAL TREES PROPOSED – 7 CANOPY (4 EXISTING TO REMAIN) AND 1 ORNAMENTAL
TOTAL SHRUBS PROPOSED 25

NOTES:

1. DO NOT HEAVILY PRUNE THE TREE AT PLANTING, PRUNE ONLY CROSSOVER LIMBS, CO-DOMINANT LEADERS, AND BROKEN OR DEAD BRANCHES. SOME INTERIOR TWIGS AND LATERAL BRANCHES MAY BE PRUNED; HOWEVER, DO NOT REMOVE THE TERMINAL BUDS OF BRANCHES THAT EXTEND TO
THE EDGE OF THE CROWN

2. STAKE TREES ONLY UPON THE APPROVAL OF THE LANDSCAPE ARCHITECT

3. WRAP TREE TRUNKS ONLY UPON THE APPROVAL OF THE LANDSCAPE ARCHITECT

4. REMOVE ALL TWINE, ROPE, WIRE AND BURLAP FROM TOP AND SIDES OF ROOT BALL.

5. EXISTING SOILS HAVE BEEN DETERMINED TO BE HAZARDOUS PER THE ENVIRONMENTAL REPORT AND WILL NEED TO BE ENCAPSULATED OR REMOVED. ANY SOIL THAT IS REMOVED FROM SITE WILL NEED TO BE DISPOSED OF IN AN APPROPRIATE MANNER. ANY EXISTING UNENCAPSULATED SOIL THAT WILL BE EXPOSED WILL NEED REMEDIAL ACTION. SEE ENVIRONMENTAL REPORT FOR REQUIREMENTS RELATED TO ENCAPSULATION, REMEDIAL ACTION AND DISPOSAL.

6. ALL LANDSCAPE AREAS TO HAVE 3" DEPTH DOUBLE SHREDDED HARDWOOD MULCH.

## LANDSCAPE PLANT SCHEDULE

| Symbol | Botanical name | Common Name | Size/Root | Quantity | Comments |
|---|---|---|---|---|---|
| TREES | | | | | |
| GT | Gleditsia tri. 'Skycole' | Skyline Honeylocust | 2.5" Cal-B&B | 3 | Male cultivar, thornless |
| SHRUBS | | | | | |
| Am | Aronia melanocarpa 'Autumn Magic' | Autumn Magic Chokeberry | 3 Gal. Container | 12 | |
| Cs | Cornus sericea | Red Twig Dogwood | 3 Gal. Container | 3 | |
| Dl | Diervilla lonicera | Northern Bush Honeysuckle | 3 Gal. Container | 3 | |
| Iv | Ilex verticillata 'Red Sprite' | Red Sprite Winterberry | 3 Gal. Container | 7 | |
| Vp | Virburnum prunifolium | Blackhaw Viburnum | 7 Gal. Container | 1 | Single Stem |
| Vr | Viburnum rafinesquianum | Downy Arrowwood | 3 Gal. Container | 1 | |
| EVERGREEN TREES/SHRUBS | | | | | |
| Ho | Thuja occidentalis 'Holmstrup' | Holmstrup Arborvitae | 4' Ht. B&B | 3 | |
| PERENNIALS/GRASSES | | | | | |
| | | | | | |
| ep | echinacea purpurea | Purple Coneflower | 1 Gal. Container | 10 | |
| ls | Liatris Spicata | Blazingstar | 1 Gal. Container | 14 | |
| rf | Rudbeckia fulgida var. deamii | Deamii Black-eyed Susan | 1 Gal. Container | 17 | |
| pv | Panicum virgatum 'Shenandoah' | Shenandoah Switchgrass | 1 Gal. Container | 6 | |
| sh | Sporobolus heterolepis | Prairie Dropseed | 1 Gal. Container | 40 | |
| ss | Schizachyrium scoparium | Little Bluestem | 1 Gal. Container | 15 | |

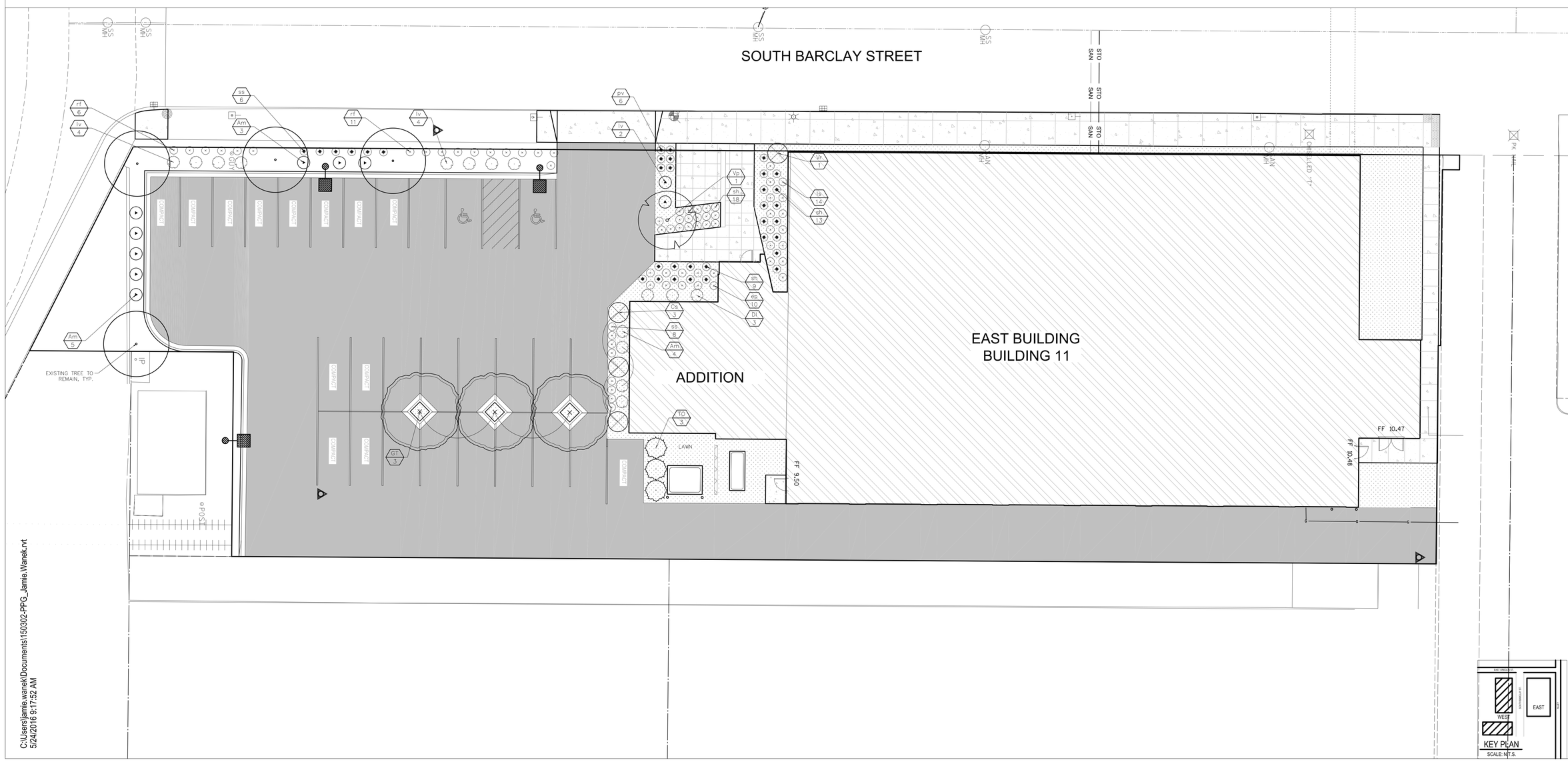





C:\Users\jamie.wanek\Documents\150302-PPG_Jamie.Wanek.rvt
5/24/2016 9:17:52 AM

DIGGERS HOTLINE
Toll Free (800) 242-8511
Milwaukee Area (414) 259-1181
Hearing Impaired TDD (800) 542-2289
www.DiggersHotline.com

N
0 10' 20'

CONTINUUM
ARCHITECTS + PLANNERS, S.C.
P. O. BOX 170663
MILWAUKEE, WI 53203
T 414.220.9640
F 414.220.9595

COPYRIGHT 2016, CONTINUUM ARCHITECTS + PLANNERS S.C.

CONSULTANTS:

Spire Engineering, Inc.
130 W. Bruce St, Suite 420
Milwaukee, WI 53204
(414) 278-9200
SE Project #: 13021

AYRES ASSOCIATES
Ayres-SAA Design Group
101 East Badger Road
Madison, WI 53719
Office (608)215-0900

THE MATRIX GROUP
ENGINEERING CONSULTANTS
311 EAST CHICAGO STREET, SUITE 310, MILWAUKEE, WI 53202
PHONE: (414) 329-28527 FAX: (414) 329-28520

THE BARCLAY - BUILDING 33 & 34

305 S. BARCLAY AVE., MILWAUKEE, WI 53204

SHEET TITLE: LANDSCAPE PLAN

REVISIONS:

| | |
|---|---|
| SCALE | VARIES |
| PROJECT NUMBER | 150302 |
| SET TYPE | PLAN EXAMINATION |
| DATE ISSUED | 07/11/2017 |
| SHEET NUMBER | C 120 |

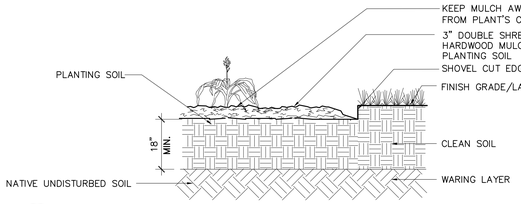


1 / C220 SHOVEL CUT EDGE

NTS

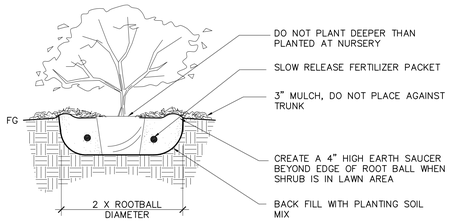


2 / C220 POTTED/CONTAINER PLANTING DETAIL

NTS

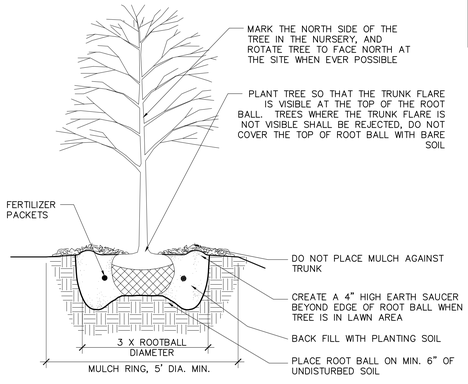


3 / C220 B&B TREE PLANTING DETAIL

NTS

## LANDSCAPE DATA

OVERALL SITE AREA = 37,799 SF (.86 AC)
ZONING DESIGNATION = IM, INDUSTRIAL–MIXED

INTERIOR PARKING LOT LANDSCAPING REQUIREMENTS
PARKING LOT AREA = 10,802
REQUIRED LANDSCAPE AREA – 5% OF LOT AREA = 540 SF
PROPOSED LANDSCAPE AREA = 1,777 SF
PARKING SPACES TOTAL 34 / 8 = 4.25 x 2 = 8.5 TREES AND 8.5 SHRUBS REQUIRED
TOTAL TREES PROPOSED 8 CANOPY AND 1 ORNAMENTAL
TOTAL SHRUBS PROPOSED 23

NOTES:

1. DO NOT HEAVILY PRUNE THE TREE AT PLANTING, PRUNE ONLY CROSSOVER LIMBS, CO–DOMINANT LEADERS, AND BROKEN OR DEAD BRANCHES. SOME INTERIOR TWIGS AND LATERAL BRANCHES MAY BE PRUNED; HOWEVER, DO NOT REMOVE THE TERMINAL BUDS OF BRANCHES THAT EXTEND TO THE EDGE OF THE CROWN

2. STAKE TREES ONLY UPON THE APPROVAL OF THE LANDSCAPE ARCHITECT

3. WRAP TREE TRUNKS ONLY UPON THE APPROVAL OF THE LANDSCAPE ARCHITECT

4. REMOVE ALL TWINE, ROPE, WIRE AND BURLAP FROM TOP AND SIDES OF ROOT BALL.

5. EXISTING SOILS HAVE BEEN DETERMINED TO BE HAZARDOUS PER THE ENVIRONMENTAL REPORT AND WILL NEED TO BE ENCAPSULATED OR REMOVED. ANY SOIL THAT IS REMOVED FROM SITE WILL NEED TO BE DISPOSED OF IN AN APPROPRIATE MANNER. ANY EXISTING UNENCAPSULATED SOIL THAT WILL BE EXPOSED WILL NEED REMEDIAL ACTION. SEE ENVIRONMENTAL REPORT FOR REQUIREMENTS RELATED TO ENCAPSULATION, REMEDIAL ACTION AND DISPOSAL.

6. ALL LANDSCAPE AREAS TO HAVE 3" DEPTH DOUBLE SHREDDED HARDWOOD MULCH.

## LANDSCAPE PLANT SCHEDULE

| Symbol | Botanical name | Common Name | Size/Root | Quantity | Comments |
|---|---|---|---|---|---|
| TREES | | | | | |
| AC | Amelanchier canadensis | Shadblow Serviceberry | 2.0" Cal–B&B | 2 | |
| CO | Celtis occidentalis 'Prairie Pride' | Prairie Pride Common Hackberry | 2.5" Cal–B&B | 2 | |
| GT | Gleditsia tri. 'Skycole' | Skyline Honeylocust | 2.5" Cal–B&B | 3 | Male cultivar, thornless |
| QB | Quercus bicolor | Swamp White Oak | 2.5" Cal–B&B | 2 | |
| UA | Ulmus x 'New Horizon' | New Horizon Elm | 2.5" Cal–B&B | 1 | |
| SHRUBS | | | | | |
| Am | Aronia melanocarpa 'Autumn Magic' | Autumn Magic Chokeberry | 3 Gal. Container | 22 | |
| Cs | Cornus sericea | Red Twig Dogwood | 3 Gal. Container | 15 | |
| Dl | Diervilla lonicera | Northern Bush Honeysuckle | 3 Gal. Container | 19 | |
| Iv | Ilex verticillata 'Red Sprite' | Red Sprite Winterberry | 3 Gal. Container | 3 | |
| Vp | Virburnum prunifolium | Blackhaw Viburnum | 7 Gal. Container | 1 | Single Stem |
| Vr | Viburnum rafinesquianum | Downy Arrowwood | 3 Gal. Container | 2 | |
| EVERGREEN TREES/SHRUBS | | | | | |
| Ho | Thuja occidentalis 'Holmstrup' | Holmstrup Arborvitae | 4' Ht. B&B | 4 | |
| Jv | Junipurus virginiana 'Taylor' | Taylor Juniper | 4' Ht. B&B | 5 | |
| PERENNIALS/GRASSES | | | | | |
| bc | Bouteloua curtipendula | Sideoats Grama | 1 Gal. Container | 24 | |
| ep | echinacea purpurea | Purple Coneflower | 1 Gal. Container | 4 | |
| rf | Rudbeckia fulgida var. deamii | Deamii Black–eyed Susan | 1 Gal. Container | 26 | |
| pv | Panicum virgatum 'Shenandoah' | Shenandoah Switchgrass | 1 Gal. Container | 27 | |
| sh | Sporobolus heterolepis | Prairie Dropseed | 1 Gal. Container | 77 | |
| ss | Schizachyrium scoparium | Little Bluestem | 1 Gal. Container | 20 | |

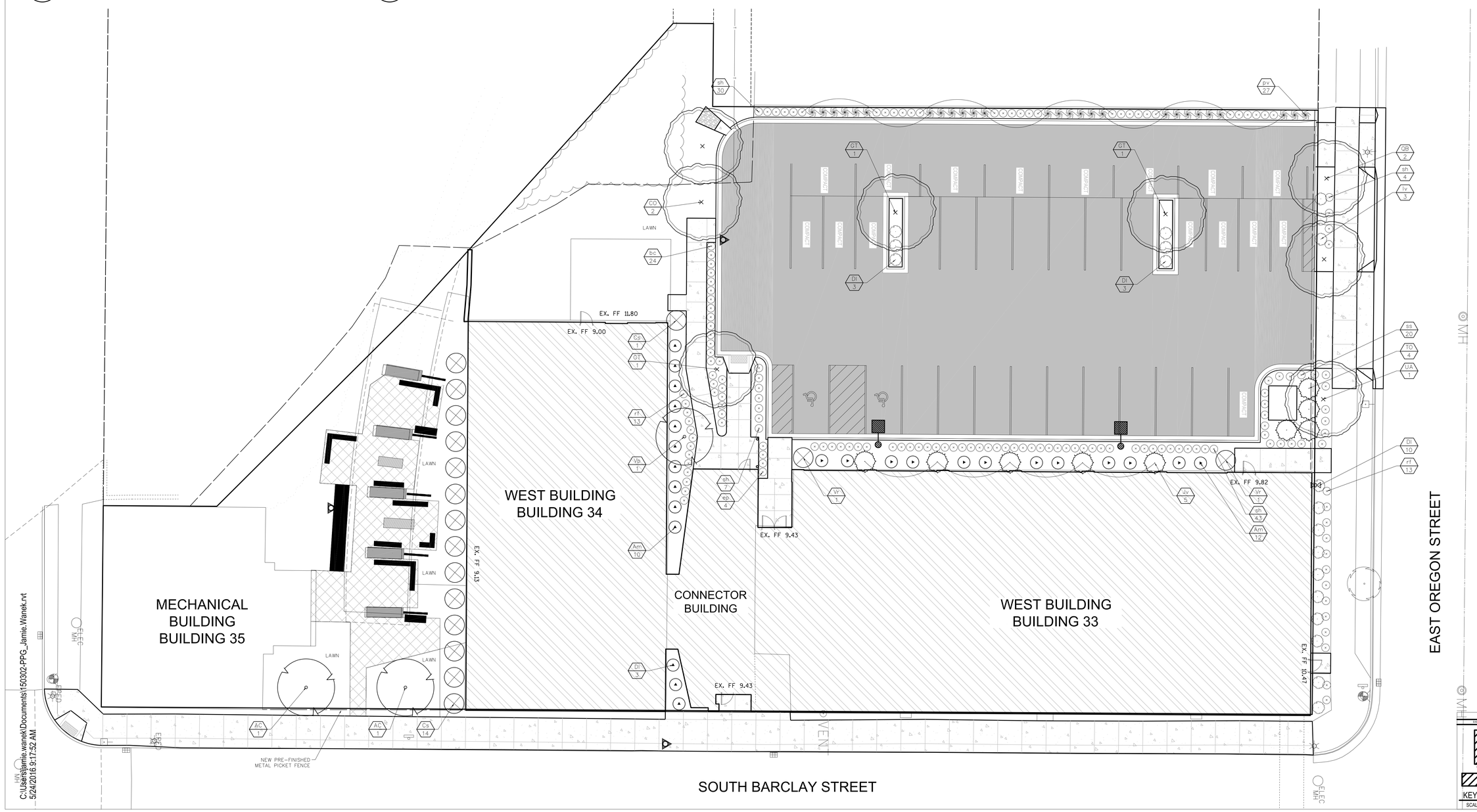


C:\Users\jamie.wanek\Documents\150302-PPG_Jamie.Wanek.rvt
5/24/2016 9:17:52 AM

DIGGERS HOTLINE
Toll Free (800) 242–8511
Milwaukee Area (414) 259–1181
Hearing Impaired TDD (800) 542–2289
www.DiggersHotline.com

N
0 10' 20'


CONTINUUM ARCHITECTS + PLANNERS, S.C.
P.O. BOX 170663
MILWAUKEE, WI 53203
T 414.220.9640
F 414.220.9595


CONSULTANTS:


Spire Engineering, Inc.
130 W. Bruce St, Suite 420
Milwaukee, WI 53204
(414) 278-9200
SE Project #: 13021

AYRES ASSOCIATES
Ayres-SAA Design Group
101 East Badger Road
Madison, WI 53719
Office (608)233-0600

THE MATRIX GROUP
ENGINEERING CONSULTANTS
311 EAST CHICAGO STREET, SUITE 310, MILWAUKEE, WI 53202
PHONE: (414) 329-28527 FAX: (414) 329-28520


COPYRIGHT 2016, CONTINUUM ARCHITECTS + PLANNERS S.C.

THE BARCLAY - BUILDING 33 & 34
305 S. BARCLAY AVE., MILWAUKEE, WI 53204

SHEET TITLE: LANDSCAPE PLAN

REVISIONS:

| | |
|---|---|
| SCALE | VARIES |
| PROJECT NUMBER | 150302 |
| SET TYPE | PLAN EXAMINATION |
| DATE ISSUED | 07/11/2017 |
| SHEET NUMBER | C 220 |

KEY PLAN
SCALE: N.T.S.

# Appendix 3

Key Engineering Group, Ltd.

State of Wisconsin
Department of Natural Resources

# SOIL BORING LOG INFORMATION

Form 4400-122 Rev. 7-98

Route To: Watershed/Wastewater ☐ Waste Management ☐
Remediation/Revelopment ☒ Other ☐ _____

Page 1 of 1

| | | |
|---|---|---|
| Facility/Project Name: Barclay | License/Permit/Monitoring Number | Boring Number: SG-8 |
| Boring Drilled By: Name of crew chief (first, last) and Firm — First Name: Mitch Last Name: P Firm: Cestra | Date Drilling Started: 02/13/2017 (mm dd yyyy) | Date Drilling Completed: 02/13/2017 (mm dd yyyy) — Drilling Method: Direct Push |
| WI Unique Well No. _ _ _ _ _ _ — DNR Well ID No. _ _ _ _ — Well Name | Final Static Water Level _____ Feet MSL | Surface Elevation _____ Feet MSL — Borehole Diameter 2 inches |
| Local Grid Origin ☐ (estimated: ☐ ) or Boring Location ☐ — State Plane _____ N, _____ E — ____ 1/4 of ____ 1/4 of Section ____, T ____ N, R ____ | Lat ___ ° ___ ' ___ " — Long ___ ° ___ ' ___ " | Local Grid Location — ____ Feet ☐ N ☐ S — ____ Feet ☐ E ☐ W |
| Facility ID | County: Milwaukee — County Code: 41 | Civil Town/City/ or Village: City of Milwaukee |

| Sample Number and Type | Length Att. & Recovered (in) | Blow Counts | Depth in Feet (Below ground surface) | Soil/Rock Description And Geologic Origin For Each Major Unit | U S C S | Graphic Log | Well Diagram | PID/FID | Soil Properties: Compressive Strength | Moisture Content | Liquid Limit | Plasticity Index | P 200 | RQD/ Comments |
|---|---|---|---|---|---|---|---|---|---|---|---|---|---|---|
| | | | | Blind drilled | | | | | | | | | | |
| | | | 4 | EOBCA' | | | | | | | | | | |

I hereby certify that the information on this form is true and correct to the best of my knowledge.

Signature: Cam — Firm: KEY Engineering

This form is authorized by Chapters 281, 283, 289, 291, 292, 293, 295, and 299, Wis. Stats. Completion of this form is mandatory. Failure to file this form may result in forfeiture of between $10 and $25,000, or imprisonment for up to one year, depending on the program and conduct involved. Personally identifiable information on this form is not intended to be used for any other purpose. NOTE: See instructions for more information, including where the completed form should be sent.

State of Wisconsin
Department of Natural Resources

# SOIL BORING LOG INFORMATION

Form 4400-122 Rev. 7-98

Route To: Watershed/Wastewater ☐ Waste Management ☐
Remediation/Revelopment ☒ Other ☐ _____

Page 1 of 1

| | | |
|---|---|---|
| Facility/Project Name: Barclay | License/Permit/Monitoring Number | Boring Number: SG-9 |
| Boring Drilled By: Name of crew chief (first, last) and Firm — First Name: Mitch Last Name: P Firm: Geotra | Date Drilling Started: 02/13/2017 (m m d d y y y y) | Date Drilling Completed: 02/13/2017 (m m d d y y y y) — Drilling Method: Direct Push |
| WI Unique Well No. _ _ _ _ _ — DNR Well ID No. _ _ _ — Well Name | Final Static Water Level: _____ Feet MSL | Surface Elevation: _____ Feet MSL — Borehole Diameter: 2 inches |
| Local Grid Origin ☐ (estimated: ☐ ) or Boring Location ☐ — State Plane _____ N, _____ E — ____ 1/4 of ____ 1/4 of Section ____, T ____ N, R ____ | Lat ___ ° ___ ' ___ " — Long ___ ° ___ ' ___ " | Local Grid Location: ☐ N ☐ E — ____ Feet ☐ S ____ Feet ☐ W |
| Facility ID | County: Milwaukee — County Code: 41 | Civil Town/City/ or Village: City of Milwaukee |

| Sample: Number and Type | Length Att. & Recovered (in) | Blow Counts | Depth in Feet (Below ground surface) | Soil/Rock Description And Geologic Origin For Each Major Unit | U S C S | Graphic Log | Well Diagram | PID/FID | Soil Properties: Compressive Strength | Moisture Content | Liquid Limit | Plasticity Index | P 200 | RQD/ Comments |
|---|---|---|---|---|---|---|---|---|---|---|---|---|---|---|
| | | | | Blind Drilled | | | | | | | | | | |
| | | | 4 | EOB@4' | | | | | | | | | | |

I hereby certify that the information on this form is true and correct to the best of my knowledge.

Signature: [signature] Firm: KEY Engineering

This form is authorized by Chapters 281, 283, 289, 291, 292, 293, 295, and 299, Wis. Stats. Completion of this form is mandatory. Failure to file this form may result in forfeiture of between $10 and $25,000, or imprisonment for up to one year, depending on the program and conduct involved. Personally identifiable information on this form is not intended to be used for any other purpose. NOTE: See instructions for more information, including where the completed form should be sent.

State of Wisconsin
Department of Natural Resources

**SOIL BORING LOG INFORMATION**
Form 4400-122 Rev. 7-98

Route To: Watershed/Wastewater ☐ Waste Management ☐
Remediation/Revelopment ☐ Other ☐ _____

Page 1 of 1

| | | |
|---|---|---|
| Facility/Project Name: Barclay | License/Permit/Monitoring Number | Boring Number: SB-10 |
| Boring Drilled By: Name of crew chief (first/last) and Firm — First Name: Mitch Last Name: B Firm: Beotra | Date Drilling Started: 12/13/2017 (mm dd yyyy) | Date Drilling Completed: 12/13/2017 (mm dd yyyy) — Drilling Method: Direct Push |
| WI Unique Well No. _ _ _ _ _ _ — DNR Well ID No. _ _ _ — Well Name | Final Static Water Level: _____ Feet MSL | Surface Elevation: _____ Feet MSL — Borehole Diameter: 2 inches |
| Local Grid Origin ☐ (estimated: ☐ ) or Boring Location ☐ — State Plane _____ N, _____ E; ____ 1/4 of ____ 1/4 of Section ____, T ____ N, R ____ | Lat ___ ° ___ ' ___ " Long ___ ° ___ ' ___ " | Local Grid Location: ☐ N ____ Feet ☐ S ☐ E ____ Feet ☐ W |
| Facility ID | County: Milwaukee — County Code: 41 | Civil Town/City/ or Village: City of Milwaukee |

| Sample: Number and Type | Length Att. & Recovered (in) | Blow Counts | Depth in Feet (Below ground surface) | Soil/Rock Description And Geologic Origin For Each Major Unit | U S C S | Graphic Log | Well Diagram | PID/FID | Soil Properties: Compressive Strength | Moisture Content | Liquid Limit | Plasticity Index | P 200 | RQD/ Comments |
|---|---|---|---|---|---|---|---|---|---|---|---|---|---|---|
| | | | | Blind drilled | | | | | | | | | | |
| | | | 4 | EOB 4' | | | | | | | | | | |

I hereby certify that the information on this form is true and correct to the best of my knowledge.

Signature: [signature] Firm: KEY Engineering

This form is authorized by Chapters 281, 283, 289, 291, 292, 293, 295, and 299, Wis. Stats. Completion of this form is mandatory. Failure to file this form may result in forfeiture of between $10 and $25,000, or imprisonment for up to one year, depending on the program and conduct involved. Personally identifiable information on this form is not intended to be used for any other purpose. NOTE: See instructions for more information, including where the completed form should be sent.

State of Wis., Dept. of Natural Resources
dnr.wi.gov

# Well / Drillhole / Borehole Filling & Sealing Report

Form 3300-005 (R 4/2015)



**Notice:** Completion of this report is required by chs. 160, 281, 283, 289, 291-293, 295, and 299, Wis. Stats., and chs. NR 141 and 812, Wis. Adm. Code. In accordance with chs. 281, 289, 291-293, 295, and 299, Wis. Stats., failure to file this form may result in a forfeiture of between $10-25,000, or imprisonment for up to one year, depending on the program and conduct involved. Personally identifiable information on this form is not intended to be used for any other purpose. Return form to the appropriate DNR office and bureau. See instructions on reverse for more information.

☐ **Verification Only of Fill and Seal**

**Route to DNR Bureau:** ☐ Drinking Water ☐ Watershed/Wastewater ☒ Remediation/Redevelopment ☐ Waste Management ☐ Other: _____

## 1. Well Location Information

County: Milwaukee
WI Unique Well # of Removed Well: _ _ _ _ _
Hicap #:
Latitude / Longitude (see instructions): _____ N _____ W
Format Code: ☐ DD ☐ DDM
Method Code: ☐ GPS008 ☐ SCR002 ☐ OTH001
¼ / ¼: ¼: Section: Township: N Range: ☐ E ☐ W
or Gov't Lot #:
Well Street Address: 1351 East Oregon Street
Well City, Village or Town: City of Milwaukee
Well ZIP Code:
Subdivision Name:
Lot #:
Reason for Removal from Service:
WI Unique Well # of Replacement Well: _ _ _ _ _

## 2. Facility / Owner Information

Facility Name: Barclay
Facility ID (FID or PWS):
License/Permit/Monitoring #: SG-8
Original Well Owner:
Present Well Owner:
Mailing Address of Present Owner:
City of Present Owner: State: ZIP Code:

## 3. Filled & Sealed Well / Drillhole / Borehole Information

☐ Monitoring Well ☐ Water Well ☒ Borehole / Drillhole
Original Construction Date (mm/dd/yyyy): 02/3/2017
If a Well Construction Report is available, please attach.
Construction Type: ☐ Drilled ☐ Driven (Sandpoint) ☐ Dug ☒ Other (specify): Direct Push
Formation Type: ☒ Unconsolidated Formation ☐ Bedrock
Total Well Depth From Ground Surface (ft.): 4
Casing Diameter (in.): 2
Lower Drillhole Diameter (in.): —
Casing Depth (ft.): —
Was well annular space grouted? ☐ Yes ☐ No ☒ Unknown
If yes, to what depth (feet)? —
Depth to Water (feet): —

## 4. Pump, Liner, Screen, Casing & Sealing Material

| | | | |
|---|---|---|---|
| Pump and piping removed? | ☐ Yes | ☐ No | ☒ N/A |
| Liner(s) removed? | ☐ Yes | ☐ No | ☒ N/A |
| Liner(s) perforated? | ☐ Yes | ☐ No | ☒ N/A |
| Screen removed? | ☐ Yes | ☐ No | ☒ N/A |
| Casing left in place? | ☐ Yes | ☐ No | ☒ N/A |
| Was casing cut off below surface? | ☐ Yes | ☐ No | ☒ N/A |
| Did sealing material rise to surface? | ☒ Yes | ☐ No | ☐ N/A |
| Did material settle after 24 hours? | ☐ Yes | ☒ No | ☐ N/A |
| If yes, was hole retopped? | ☐ Yes | ☐ No | ☒ N/A |
| If bentonite chips were used, were they hydrated with water from a known safe source? | ☐ Yes | ☐ No | ☒ N/A |

Required Method of Placing Sealing Material: ☐ Conductor Pipe-Gravity ☐ Conductor Pipe-Pumped ☐ Screened & Poured (Bentonite Chips) ☒ Other (Explain): gravity

Sealing Materials: ☐ Neat Cement Grout ☐ Concrete ☐ Sand-Cement (Concrete) Grout ☒ Bentonite Chips

*For Monitoring Wells and Monitoring Well Boreholes Only:* ☐ Bentonite Chips ☐ Bentonite - Cement Grout ☐ Granular Bentonite ☐ Bentonite - Sand Slurry

## 5. Material Used to Fill Well / Drillhole

| Material | From (ft.) | To (ft.) | No. Yards, Sacks Sealant or Volume (circle one) | Mix Ratio or Mud Weight |
|---|---|---|---|---|
| Bentonite chips | Surface | 4 | 0.085 | |
| | | | | |
| | | | | |

## 6. Comments

## 7. Supervision of Work

Name of Person or Firm Doing Filling & Sealing: KEY Engineering
License #:
Date of Filling & Sealing or Verification (mm/dd/yyyy): 03/15/2017
Street or Route: 735 N. Water St. Suite 510
Telephone Number: (414) 243-300
City: Milwaukee State: WI ZIP Code: 53202
Signature of Person Doing Work:
Date Signed: 03/15/2017

**DNR Use Only**
Date Received:
Noted By:
Comments:

State of Wis., Dept. of Natural Resources
dnr.wi.gov

# Well / Drillhole / Borehole Filling & Sealing Report

Form 3300-005 (R 4/2015)



**Notice:** Completion of this report is required by chs. 160, 281, 283, 289, 291-293, 295, and 299, Wis. Stats., and chs. NR 141 and 812, Wis. Adm. Code. In accordance with chs. 281, 289, 291-293, 295, and 299, Wis. Stats., failure to file this form may result in a forfeiture of between $10-25,000, or imprisonment for up to one year, depending on the program and conduct involved. Personally identifiable information on this form is not intended to be used for any other purpose. Return form to the appropriate DNR office and bureau. See instructions on reverse for more information.

☐ **Verification Only of Fill and Seal**

**Route to DNR Bureau:** ☐ Drinking Water ☐ Watershed/Wastewater ☒ Remediation/Redevelopment ☐ Waste Management ☐ Other: _____

## 1. Well Location Information

County: Milwaukee
WI Unique Well # of Removed Well: _ _ _ _ _
Hicap #:
Latitude / Longitude (see instructions): _____ N _____ W
Format Code: ☐ DD ☐ DDM
Method Code: ☐ GPS008 ☐ SCR002 ☐ OTH001
¼ / ¼ | ¼ | Section | Township N | Range ☐ E ☐ W
or Gov't Lot #
Well Street Address: 139 East Oregon Street
Well City, Village or Town: City of Milwaukee
Well ZIP Code:
Subdivision Name:
Lot #:
Reason for Removal from Service:
WI Unique Well # of Replacement Well: _ _ _ _ _

## 2. Facility / Owner Information

Facility Name: Barclay
Facility ID (FID or PWS):
License/Permit/Monitoring #: SG-9
Original Well Owner:
Present Well Owner:
Mailing Address of Present Owner:
City of Present Owner | State | ZIP Code:

## 3. Filled & Sealed Well / Drillhole / Borehole Information

☐ Monitoring Well
☐ Water Well
☒ Borehole / Drillhole

Original Construction Date (mm/dd/yyyy): 02/13/2017
If a Well Construction Report is available, please attach.

Construction Type:
☐ Drilled ☐ Driven (Sandpoint) ☐ Dug
☒ Other (specify): Direct Push

Formation Type:
☒ Unconsolidated Formation ☐ Bedrock

Total Well Depth From Ground Surface (ft.): 4
Casing Diameter (in.): 2
Lower Drillhole Diameter (in.): —
Casing Depth (ft.): —
Was well annular space grouted? ☐ Yes ☐ No ☒ Unknown
If yes, to what depth (feet)? —
Depth to Water (feet): —

## 4. Pump, Liner, Screen, Casing & Sealing Material

| | | | |
|---|---|---|---|
| Pump and piping removed? | ☐ Yes | ☐ No | ☒ N/A |
| Liner(s) removed? | ☐ Yes | ☐ No | ☒ N/A |
| Liner(s) perforated? | ☐ Yes | ☐ No | ☒ N/A |
| Screen removed? | ☐ Yes | ☐ No | ☒ N/A |
| Casing left in place? | ☐ Yes | ☐ No | ☒ N/A |
| Was casing cut off below surface? | ☐ Yes | ☐ No | ☒ N/A |
| Did sealing material rise to surface? | ☒ Yes | ☐ No | ☐ N/A |
| Did material settle after 24 hours? | ☐ Yes | ☒ No | ☐ N/A |
| If yes, was hole retopped? | ☐ Yes | ☐ No | ☒ N/A |
| If bentonite chips were used, were they hydrated with water from a known safe source? | ☐ Yes | ☐ No | ☒ N/A |

Required Method of Placing Sealing Material
☐ Conductor Pipe-Gravity ☐ Conductor Pipe-Pumped
☐ Screened & Poured (Bentonite Chips) ☒ Other (Explain): gravity

Sealing Materials
☐ Neat Cement Grout ☐ Concrete
☐ Sand-Cement (Concrete) Grout ☒ Bentonite Chips

*For Monitoring Wells and Monitoring Well Boreholes Only:*
☐ Bentonite Chips ☐ Bentonite - Cement Grout
☐ Granular Bentonite ☐ Bentonite - Sand Slurry

## 5. Material Used to Fill Well / Drillhole

| Material | From (ft.) | To (ft.) | No. Yards, Sacks Sealant or Volume (circle one) | Mix Ratio or Mud Weight |
|---|---|---|---|---|
| Bentonite chips | Surface | 4 | 0.039 | |
| | | | | |
| | | | | |

## 6. Comments

## 7. Supervision of Work

Name of Person or Firm Doing Filling & Sealing: KEY Engineering
License #:
Date of Filling & Sealing or Verification (mm/dd/yyyy): 03/15/2017
Street or Route: 735 N. Water St. Suite 510
Telephone Number: (414) 224 8300
City | State | ZIP Code
Signature of Person Doing Work
Date Signed

**DNR Use Only**
Date Received
Noted By
Comments

State of Wis., Dept. of Natural Resources
dnr.wi.gov

# Well / Drillhole / Borehole Filling & Sealing Report

Form 3300-005 (R 4/2015)



**Notice:** Completion of this report is required by chs. 160, 281, 283, 289, 291-293, 295, and 299, Wis. Stats., and chs. NR 141 and 812, Wis. Adm. Code. In accordance with chs. 281, 289, 291-293, 295, and 299, Wis. Stats., failure to file this form may result in a forfeiture of between $10-25,000, or imprisonment for up to one year, depending on the program and conduct involved. Personally identifiable information on this form is not intended to be used for any other purpose. Return form to the appropriate DNR office and bureau. See instructions on reverse for more information.

☐ **Verification Only of Fill and Seal**

**Route to DNR Bureau:** ☐ Drinking Water ☐ Watershed/Wastewater ☒ Remediation/Redevelopment ☐ Waste Management ☐ Other: _____

## 1. Well Location Information

County: Milwaukee
WI Unique Well # of Removed Well: _ _ _ _ _
Hicap #:
Latitude / Longitude (see instructions): _____ N _____ W
Format Code: ☐ DD ☐ DDM
Method Code: ☐ GPS008 ☐ SCR002 ☐ OTH001
¼ / ¼: ¼: or Gov't Lot #:
Section:
Township: N
Range: ☐ E ☐ W
Well Street Address: 300 South Barclay Street
Well City, Village or Town: City of Milwaukee
Well ZIP Code:
Subdivision Name:
Lot #:
Reason for Removal from Service:
WI Unique Well # of Replacement Well: _ _ _ _ _

## 2. Facility / Owner Information

Facility Name: Barclay
Facility ID (FID or PWS):
License/Permit/Monitoring #: S67-10
Original Well Owner:
Present Well Owner:
Mailing Address of Present Owner:
City of Present Owner: State: ZIP Code:

## 3. Filled & Sealed Well / Drillhole / Borehole Information

☐ Monitoring Well ☐ Water Well ☒ Borehole / Drillhole
Original Construction Date (mm/dd/yyyy): 02/13/2017
If a Well Construction Report is available, please attach.
Construction Type: ☐ Drilled ☐ Driven (Sandpoint) ☐ Dug ☒ Other (specify): Direct Push
Formation Type: ☒ Unconsolidated Formation ☐ Bedrock
Total Well Depth From Ground Surface (ft.): 4
Casing Diameter (in.): 2
Lower Drillhole Diameter (in.): —
Casing Depth (ft.): —
Was well annular space grouted? ☐ Yes ☐ No ☒ Unknown
If yes, to what depth (feet)? —
Depth to Water (feet): —

## 4. Pump, Liner, Screen, Casing & Sealing Material

| | | | |
|---|---|---|---|
| Pump and piping removed? | ☐ Yes | ☐ No | ☒ N/A |
| Liner(s) removed? | ☐ Yes | ☐ No | ☒ N/A |
| Liner(s) perforated? | ☐ Yes | ☐ No | ☒ N/A |
| Screen removed? | ☐ Yes | ☐ No | ☒ N/A |
| Casing left in place? | ☐ Yes | ☐ No | ☒ N/A |
| Was casing cut off below surface? | ☐ Yes | ☐ No | ☒ N/A |
| Did sealing material rise to surface? | ☒ Yes | ☐ No | ☐ N/A |
| Did material settle after 24 hours? | ☐ Yes | ☒ No | ☐ N/A |
| If yes, was hole retopped? | ☐ Yes | ☐ No | ☒ N/A |
| If bentonite chips were used, were they hydrated with water from a known safe source? | ☐ Yes | ☐ No | ☒ N/A |

Required Method of Placing Sealing Material: ☐ Conductor Pipe-Gravity ☐ Conductor Pipe-Pumped ☐ Screened & Poured (Bentonite Chips) ☒ Other (Explain): Gravity

Sealing Materials: ☐ Neat Cement Grout ☐ Concrete ☐ Sand-Cement (Concrete) Grout ☒ Bentonite Chips

*For Monitoring Wells and Monitoring Well Boreholes Only:* ☐ Bentonite Chips ☐ Bentonite - Cement Grout ☐ Granular Bentonite ☐ Bentonite - Sand Slurry

## 5. Material Used to Fill Well / Drillhole

| Material | From (ft.) | To (ft.) | No. Yards, Sacks Sealant or Volume (circle one) | Mix Ratio or Mud Weight |
|---|---|---|---|---|
| Bentonite Chips | Surface | 4 | 0.089 | |
| | | | | |

## 6. Comments

## 7. Supervision of Work

Name of Person or Firm Doing Filling & Sealing: KEY Engineering
License #:
Date of Filling & Sealing or Verification (mm/dd/yyyy): 03/15/2017
Street or Route: 735 N. Water St. Suite 510
Telephone Number: (414) 224 8300
City: Milwaukee State: WI ZIP Code: 53202
Signature of Person Doing Work: [signature]
Date Signed: 03/15/2017

**DNR Use Only**
Date Received:
Noted By:
Comments:

STS Consultants Ltd.

| OWNER | LOG OF BORING NUMBER |
|---|---|
| WAYNE CHEMICAL | B-1 |
| **PROJECT NAME** | **ARCHITECT-ENGINEER** |
| Kiln Foundation | Klug & Smith |

SITE LOCATION: Milwaukee, Wisconsin

| DEPTH / ELEVATION | SAMPLE NO | SAMPLE TYPE | SAMPLE DISTANCE | RECOVERY | DESCRIPTION OF MATERIAL | UNIT DRY WT LBS/FT³ |
|---|---|---|---|---|---|---|
| | | PA | | | SURFACE ELEVATION | |
| | 1 | SS | | | Clayey sand fill, some brick fragments-black-moist-medium dense (SC & Misc Fill) | |
| | 2 | SS | | | "B" | |
| | | PA | | | | |
| 5ft | 3 | SS | | | Foundry sand & cinder fill-black-wet-loose (Misc Fill) | |
| | | PA | | | | |
| | 4 | SS | | | Silty fine to medium sand fill, trace gravel-brownish grey to black-wet-loose (SM-Fill) | |
| | | PA | | | | |
| | 5 | SS | | | Silty clay, little sand-brownish grey-stiff (CL) | |
| 10ft | | RB | | | | |
| | 6 | SS | | | | |
| | | RB | | | | |
| | 7 | 3" ST | | | Silty clay, trace sand-grey-soft (CL) | |
| 15ft | | RB | | | | |
| | 8 | SS | | | Clayey fibrous peat-black (PT) | |
| | | RB | | | | |
| 20ft | | | | | | |
| | 9 | SS | | | Slightly organic clayey fine to medium sand, trace shells-grey-wet-loose (SC) | |
| | | RB | | | | |
| 25ft | | | | | | |
| | 10 | ST | | | | |
| | | RB | | | | |
| 30ft | | | | | | |
| | 11 | SS | | | | |
| | | RB | | | | |
| 33ft | | | | | | |
| | | | | | (Cont'd) | |

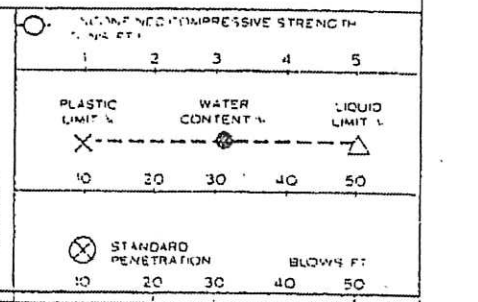


THE STRATIFICATION LINES REPRESENT THE APPROXIMATE BOUNDARY LINES BETWEEN SOIL TYPES. IN SITU, THE TRANSITION MAY BE GRADUAL.

SHEET NO. 1 OF 3

STS JOB NO. 81763

BL: 2-983

STS Consultants Ltd.

| OWNER | LOG OF BORING NUMBER |
|---|---|
| WAYNE CHEMICAL | B-1 |
| **PROJECT NAME** | **ARCHITECT-ENGINEER** |
| Kiln Foundation | Klug & Smith |

SITE LOCATION: Milwaukee, Wisconsin

| DEPTH | ELEVATION | SAMPLE NO | SAMPLE TYPE | SAMPLE DISTANCE | RECOVERY | DESCRIPTION OF MATERIAL / SURFACE ELEVATION | UNIT DRY WT LBS./FT.³ |
|---|---|---|---|---|---|---|---|
| 30ft | | | RB | | | Slightly organic clayey fine to medium sand, trace shells-grey-wet-loose (SC) | |
| 35ft | | 12 | 3" ST | | | Clayey organic silt with thin fine sand seams, trace shells-dark grey-medium (OL) | |
| | | | RB | | | | |
| 40ft | | 13 | SS | | | | |
| | | | RB | | | | |
| 45ft | | 14 | ST | | | | |
| | | | RB | | | | |
| 50ft | | 15 | SS | | | Slightly organic silty clay-grey-soft (CL-OL) | |
| | | | RB | | | | |
| 55ft | | 16 | ST | | | | |
| | | | RB | | | | |
| 60ft | | 17 | SS | | | | |
| | | | RB | | | | |

(Cont'd)

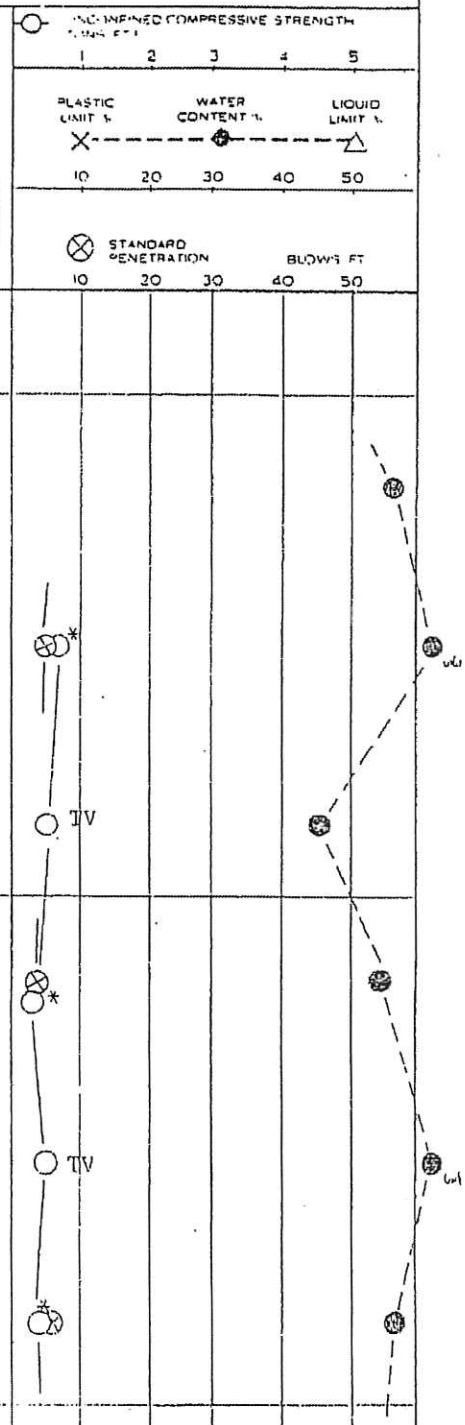


THE STRATIFICATION LINES REPRESENT THE APPROXIMATE BOUNDARY LINES BETWEEN SOIL TYPES. IN SITU, THE TRANSITION MAY BE GRADUAL.

SHEET NO. 2 OF 3

STS JOB NO. 81763

BL: 2-983

STS Consultants Ltd.

| OWNER | LOG OF BORING NUMBER |
|---|---|
| WAYNE CHEMICAL | B-1 |
| PROJECT NAME: Kiln Foundation | ARCHITECT-ENGINEER: Klug & Smith |

SITE LOCATION: Milwaukee, Wisconsin

| DEPTH / ELEVATION | SAMPLE NO | SAMPLE TYPE | SAMPLE DISTANCE | RECOVERY | DESCRIPTION OF MATERIAL / SURFACE ELEVATION | UNIT DRY WT LBS. FT³ |
|---|---|---|---|---|---|---|
| 60 ft | | RB | | | Slightly organic silty clay-grey-soft (CL-OL) | |
| 65 ft | 18 | ST | | | Clayey organic silt, with very thin irregular silt seams- dark grey (OL) | |
| | | RB | | | | |
| 70 ft | 19 | SS | | | Clayey silt-grey-wet-loose (ML) | |
| | | RB | | | | |
| 75 ft | 20 | SS | | | Fine to medium sand, little silt-brownish grey-wet-medium dense (SM) | |
| | | RB | | | | |
| 80 ft | 21 | SS | | | Fine to coarse sand & gravel, little silt-brownish grey-wet-very dense to dense (SM-GM) | |
| | | RB | | | | |
| 85 ft | 22 | SS | | | | |
| 86.5 ft | | | | | END OF BORING<br>Installed 10 feet of HW casing<br>"A"--3-1/2" asphalt<br>"B"--Sand & gravel fill, some brick fragments, little silt-brown, grey & black-moist-loose (SM-GM & Misc Fill) | |

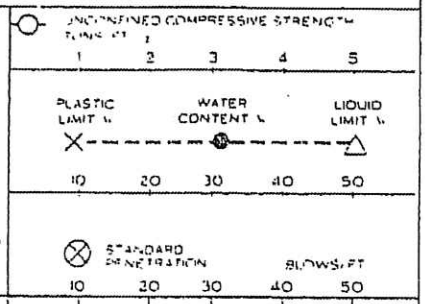


○* Calibrated Penetrometer
○TV Torvane Device

THE STRATIFICATION LINES REPRESENT THE APPROXIMATE BOUNDARY LINES BETWEEN SOIL TYPES IN SITU, THE TRANSITION MAY BE GRADUAL.

| | | | |
|---|---|---|---|
| WL 4-5.5' WS | BORING STARTED 3-28-84 | STS OFFICE Milwaukee | |
| WL BCR ACR | BORING COMPLETED 3-28-84 | DRAWN BY RM | SHEET NO. 3 OF 3 |
| WL | RIG CME 55 FOREMAN PW | APP'D BY ABW | STS JOB NO. 81763 |

BL: 1-983

**DRAKE**
ENVIRONMENTAL, INC.

| PROJECT NAME | PROJ MGR | BORING NUMBER |
|---|---|---|
| WAYNE PIGMENT CORP. | MRG | B-2 |

| BORING DRILLED BY | CREW CHEIF |
|---|---|
| FIRM: KITSON ENVIRONMENTAL SERVICES, INC. | FIRST NAME: DUSTY LAST NAME: |

| DATE DRILLING STARTED | DATE DRILLING COMPLETED | LOCATION DESCRIPTION |
|---|---|---|
| 03/28/06 | 03/28/06 | NE ¼ NE ¼ SEC 32 T7N R22E |

| DRILLING METHOD | BOREHOLE DIAMETER |
|---|---|
| DIRECT PUSH | 2 INCHES |

| FACILITY ID | COUNTY | COUNTY CODE | TOWN/CITY/OR VILLAGE |
|---|---|---|---|
| 677757 | MILWAUKEE | 40 | CITY OF MILWAUKEE |

| DEPTH | SAMPLE | TYPE | N | QP | DEPTH (bgs) | DESCRIPTION | USCS | PID |
|---|---|---|---|---|---|---|---|---|
| 0–2 | | | | | | NO RECOVERY | NA | NA |
| 2–4 | | | | | | SANDY GRAVELLY FILL W/BRICK FRAGMENTS<br>GRAVELLY CLAY W/ROCK FRAGMENTS | GW | <1 |
| 4–6 | LAB SAMPLE | | | | | NO RECOVERY<br>BLACK ROCKY SAND W/WOOD FRAGMENTS | GW | NA |
| 6–8 | | | | | | WET GRAY SILTY CLAY | CL | <1 |
| 8–10 | | | | | | NO RECOVERY<br>GRAY SILTY CLAY | CL | NA |
| 10–12 | | | | | | GRAY SILTY CLAY | CL | NA |
| 12–21 | | | | | | EOB @ 12 FEET | | |

NOTES: NA = NOT ANALYZED

7\C\AutoCAD LT 2000\Drake Drawings\Drake Boring Log Form.dwg

**DRAKE**
ENVIRONMENTAL, INC.

| | | | |
|---|---|---|---|
| PROJECT NAME: WAYNE PIGMENT CORP. | | PROJ MGR: MRG | BORING NUMBER: B-3 |
| BORING DRILLED BY FIRM: KITSON ENVIRONMENTAL SERVICES, INC. | | CREW CHEIF FIRST NAME: DUSTY | LAST NAME: |
| DATE DRILLING STARTED: 03/28/06 | DATE DRILLING COMPLETED: 03/28/06 | LOCATION DESCRIPTION: NE ¼ NE ¼ SEC 32 T7N R22E | |
| DRILLING METHOD: DIRECT PUSH | BOREHOLE DIAMETER: 2 INCHES | | |
| FACILITY ID: 677757 | COUNTY: MILWAUKEE | COUNTY CODE: 40 | TOWN/CITY/OR VILLAGE: CITY OF MILWAUKEE |

| DEPTH | SAMPLE | TYPE | N | QP | DEPTH (bgs) | DESCRIPTION | USCS | PID |
|---|---|---|---|---|---|---|---|---|
| 0–2 | | | | | | NO RECOVERY 0–1.5'<br>SANDY GRAVELLY FILL | NA | NA |
| 2–4 | | | | | | GRAVELLY FILL W/ROCK, WOOD, AND COAL FRAGMENTS | GW | 4.1 |
| 4–6 | LAB SAMPLE | | | | | NO RECOVERY<br>ROCKY/SANDY GRAVELLY FILL | GW | 2.9 |
| 6–8 | | | | | | WET GRAY SILTY SANDY CLAY | CL | NA |
| 8–10 | | | | | | NO RECOVERY<br>GRAY SILTY SAND | CL | NA |
| 10–12 | | | | | | GRAY SILTY CLAY | CL | NA |
| 12–21 | | | | | | EOB @ 12 FEET | | |

NOTES: NA = NOT ANALYZED

7\C\AutoCAD LT 2000\Drake Drawings\Drake Boring Log Form.dwg

**DRAKE**
ENVIRONMENTAL, INC.

| PROJECT NAME | PROJ MGR | BORING NUMBER |
|---|---|---|
| WAYNE PIGMENT CORP. | MRG | B-6 |

| BORING DRILLED BY | CREW CHEIF |
|---|---|
| FIRM: KITSON ENVIRONMENTAL SERVICES, INC. | FIRST NAME: DUSTY LAST NAME: |

| DATE DRILLING STARTED | DATE DRILLING COMPLETED | LOCATION DESCRIPTION |
|---|---|---|
| 03/28/06 | 03/28/06 | NE ¼ NE ¼ SEC 32 T7N R22E |

| DRILLING METHOD | BOREHOLE DIAMETER |
|---|---|
| DIRECT PUSH | 2 INCHES |

| FACILITY ID | COUNTY | COUNTY CODE | TOWN/CITY/OR VILLAGE |
|---|---|---|---|
| 677757 | MILWAUKEE | 40 | CITY OF MILWAUKEE |

| DEPTH | SAMPLE | TYPE | N | QP | DEPTH (bgs) | DESCRIPTION | USCS | PID |
|---|---|---|---|---|---|---|---|---|
| 0–2 | | | | | | NO RECOVERY<br>SANDY GRAVELLY FILL W/SOME ROCK & WOOD FRAGMENTS | NA | NA |
| 2–4 | | | | | | SANDY GRAVELLY FILL W/SOME ROCK & WOOD FRAGMENTS | GW | 69.9 |
| 4–6 | | | | | | NO RECOVERY<br>SANDY GRAVELLY FILL W/SOME ROCK FRAGMENTS | GW | NA |
| 6–8 | LAB SAMPLE | | | | | WET SANDY GRAVELLY FILL<br>GRAY SILTY SAND W/SLIGHT PETROLEUM ODOR | GW | MAX @ 250 |
| 8–10 | | | | | | SAND AND GRAVEL FILL | GW | NA |
| 10–12 | | | | | | BROWN SILTY SANDY CLAY | CL | NA |
| 12–21 | | | | | | EOB @ 12 FEET | | |

NOTES: NA = NOT ANALYZED

State of Wisconsin
Department of Natural Resources

**SOIL BORING LOG INFORMATION**
Form 4400-122 Rev. 7-98

Route To: Watershed/Wastewater ☐ Waste Management ☐
Remediation/Revelopment ☒ Other ☐ _____

Page 1 of 2

| | | | |
|---|---|---|---|
| Facility/Project Name: 300 South Barclay | License/Permit/Monitoring Number | Boring Number SB-18 | |
| Boring Drilled By: Name of crew chief (first, last) and Firm<br>First Name: Adam Last Name: Sweet<br>Firm: Horizon | Date Drilling Started 12/03/2015 (mm dd yyyy) | Date Drilling Completed 12/03/2015 (mm dd yyyy) | Drilling Method Direct Push |
| WI Unique Well No. _ _ _ _ _ _ | DNR Well ID No. _ _ _ | Well Name | Final Static Water Level _____ Feet MSL | Surface Elevation _____ Feet MSL | Borehole Diameter 2 inches |
| Local Grid Origin ☐ (estimated: ☐) or Boring Location ☐<br>State Plane _____ N, _____ E<br>SE 1/4 of NE 1/4 of Section 32, T 07 N, R 22 E | Lat ° ' "<br>Long ° ' " | Local Grid Location<br>☐ N ☐ E<br>_____ Feet ☐ S _____ Feet ☐ W | |
| Facility ID 241029470 | County Milwaukee | County Code 41 | Civil Town/City/ or Village City of Milwaukee |

| Sample Number and Type | Length Att. & Recovered (in) | Blow Counts | Depth in Feet (Below ground surface) | Soil/Rock Description And Geologic Origin For Each Major Unit | USCS | Graphic Log | Well Diagram | PID/FID | Soil Properties: Compressive Strength | Moisture Content | Liquid Limit | Plasticity Index | P 200 | RQD/ Comments |
|---|---|---|---|---|---|---|---|---|---|---|---|---|---|---|
| | | | | 4" silty sand + gravel, grey | | | | | | | | | | |
| | 20 | | | 10" sand w/ slag + gravel black / dark brown<br>6" silt w/ some sand and crushed brick, dark brown | | | | | | | | | | |
| | | | 5 | | | | | | | | | | | |
| | 20 | | | 5" silt w/ some sand, slag, and wood, dark brown / black<br>3" sand w/ some silt, dark grey, brown<br>12" silt, grey, brown mottling | | | | | | ▽ | 8' | | | |
| | | | 10 | | | | | | | | | | | |
| | 50 | | | 18" silt grey, brown mottling<br>32" silt + fine sand, grey | | | | | | | | | | |
| | | | 15 | | | | | | | | | | | |

I hereby certify that the information on this form is true and correct to the best of my knowledge.

Signature [signature] Firm LEY Engineering

This form is authorized by Chapters 281, 283, 289, 291, 292, 293, 295, and 299, Wis. Stats. Completion of this form is mandatory. Failure to file this form may result in forfeiture of between $10 and $25,000, or imprisonment for up to one year, depending on the program and conduct involved. Personally identifiable information on this form is not intended to be used for any other purpose. NOTE: See instructions for more information, including where the completed form should be sent.

| Sample Number and Type | Sample Length Att. & Recovered (in) | Blow Counts | Depth in Feet | Soil/Rock Description And Geologic Origin For Each Major Unit | U S C S | Graphic Log | Well Diagram | PID/FID | Soil Properties: Compressive Strength | Moisture Content | Liquid Limit | Plasticity Index | P 200 | RQD/ Comments |
|---|---|---|---|---|---|---|---|---|---|---|---|---|---|---|
| | 60 | | | 32" silt + fine sand, grey<br>12" clay w/some silt, grey<br>12" peat | | | | | | | | | | |
| | | | 20 | E.O.B.@ 20' | | | | | | | | | | |

State of Wisconsin
Department of Natural Resources

# SOIL BORING LOG INFORMATION

Form 4400-122 Rev. 7-98

Route To: Watershed/Wastewater ☐ Waste Management ☐
Remediation/Revelopment ☒ Other ☐ _____

Page 1 of 2

| | | |
|---|---|---|
| Facility/Project Name: 300 South Barclay | License/Permit/Monitoring Number | Boring Number: SB-21 |
| Boring Drilled By: Name of crew chief (first, last) and Firm — First Name: Adam Last Name: Sweet Firm: Horizon | Date Drilling Started: 12/03/2015 (mm dd yyyy) | Date Drilling Completed: 12/03/2015 (mm dd yyyy) — Drilling Method: Direct Push |
| WI Unique Well No. _ _ _ _ _ _ — DNR Well ID No. _ _ _ — Well Name | Final Static Water Level: _____ Feet MSL | Surface Elevation: _____ Feet MSL — Borehole Diameter: 2 inches |
| Local Grid Origin ☐ (estimated: ☐) or Boring Location ☐ — State Plane _____ N, _____ E | Lat ° ' " Long ° ' " | Local Grid Location: ☐ N ☐ E _____ Feet ☐ S _____ Feet ☐ W |
| SE 1/4 of NE 1/4 of Section 32, T 07 N, R 22 E | | |
| Facility ID: 241029470 — County: Milwaukee | County Code: 41 | Civil Town/City/ or Village: City of Milwaukee |

| Sample Number and Type | Length Att. & Recovered (in) | Blow Counts | Depth in Feet (Below ground surface) | Soil/Rock Description And Geologic Origin For Each Major Unit | USCS | Graphic Log | Well Diagram | PID/FID | Soil Properties: Compressive Strength | Moisture Content | Liquid Limit | Plasticity Index | P 200 | RQD/ Comments |
|---|---|---|---|---|---|---|---|---|---|---|---|---|---|---|
| | 12 | | | 3" silt w/ some organic material, soft, red brown<br>3" silty sand & gravel, brown<br>6" slag w/ some silt & small gravel, brown | | | | | | | | | | |
| | | | 5 | | | | | | | | | | | |
| | 28 | | | 15" silty sand & gravel, brown<br>2" crushed brick & fill material<br>4" sandy silt, soft<br>4" sand w/ some wood & silt, dark brown/black | | | | 8<br>8/3 | 8<br>10 | | | | | |
| | | | 10 | | | | | | | | | | | |
| | 0 | | | no return | | | | | | | | | | |
| | | | 15 | | | | | | | | | | | |

I hereby certify that the information on this form is true and correct to the best of my knowledge.

Signature: [signature] Firm: LEY Engineering

This form is authorized by Chapters 281, 283, 289, 291, 292, 293, 295, and 299, Wis. Stats. Completion of this form is mandatory. Failure to file this form may result in forfeiture of between $10 and $25,000, or imprisonment for up to one year, depending on the program and conduct involved. Personally identifiable information on this form is not intended to be used for any other purpose. NOTE: See instructions for more information, including where the completed form should be sent.

| Sample: Number and Type | Sample: Length Att. & Recovered (in.) | Blow Counts | Depth in Feet | Soil/Rock Description And Geologic Origin For Each Major Unit | USCS | Graphic Log | Well Diagram | PID/FID | Soil Properties: Compressive Strength | Soil Properties: Moisture Content | Soil Properties: Liquid Limit | Soil Properties: Plasticity Index | Soil Properties: P 200 | RQD/ Comments |
|---|---|---|---|---|---|---|---|---|---|---|---|---|---|---|
| | 50 | | | 3" peat, soft, sticky brown, ul petroleum odor<br>33" silt, med brown, wet<br>24" silt w/ some fine sandy wet, grey | | | | | | 4 ex | | | | |
| | | | 20 | E.O.B.C<br>20' | | | | | | | | | | |

State of Wisconsin
Department of Natural Resources

# SOIL BORING LOG INFORMATION

Form 4400-122 Rev. 7-98

Route To: Watershed/Wastewater ☐ Waste Management ☐
Remediation/Revelopment ☒ Other ☐ _____

Page 1 of 1

| | | |
|---|---|---|
| Facility/Project Name: 300 Barclay | License/Permit/Monitoring Number | Boring Number: SB-44 |
| Boring Drilled By: Name of crew chief (first, last) and Firm — First Name: Mike; Last Name: ; Firm: Geotra | Date Drilling Started: 09/07/2016 (m m d d y y y y) | Date Drilling Completed: 09/07/2016 (m m d d y y y y) — Drilling Method: Direct Push |
| WI Unique Well No. ___ | DNR Well ID No. ___ | Well Name ___ |
| Final Static Water Level: ____ Feet MSL | Surface Elevation: ____ Feet MSL | Borehole Diameter: 2 inches |
| Local Grid Origin ☐ (estimated: ☐ ) or Boring Location ☐ — State Plane ____ N, ____ E; ____ 1/4 of ____ 1/4 of Section ____, T ____ N, R ____ | Lat ° ' " ; Long ° ' " | Local Grid Location: ____ Feet ☐ N ☐ S ____ Feet ☐ E ☐ W |
| Facility ID | County: Milwaukee | County Code: 41 — Civil Town/City/ or Village: City of Milwaukee |

| Sample Number and Type | Length Att. & Recovered (in) | Blow Counts | Depth in Feet (Below ground surface) | Soil/Rock Description And Geologic Origin For Each Major Unit | USCS | Graphic Log | Well Diagram | PID/FID | Compressive Strength | Moisture Content | Liquid Limit | Plasticity Index | P 200 | RQD/ Comments |
|---|---|---|---|---|---|---|---|---|---|---|---|---|---|---|
| * concrete 4" | 30 | | | 30" silt, fine-coarse gravel, light brown-tan | | | | 1.5 / 1.6 / 2.3 | 2 / 4 | | | | | |
| | 36 | | 5 | 3" silt, fine-coarse gravel, light brown to tan; 3" silt, fine-coarse gravel black; 30" silt w/ trace fine-med gravel wood, black hard chunks (unknown), black | | | | 2.6 / 2.5 | 6 / 8 / 10 | wet at 7' | | | | |
| | 36 | | 10 | 36" silt, trace fine gravel, grey | | | | 1.8 / 1.4 | 12 / 15 | | | | | |
| | | | 15 | | | | | | | | | | | |

I hereby certify that the information on this form is true and correct to the best of my knowledge.

Signature: [signature] Firm: KEY Engineering

This form is authorized by Chapters 281, 283, 289, 291, 292, 293, 295, and 299, Wis. Stats. Completion of this form is mandatory. Failure to file this form may result in forfeiture of between $10 and $25,000, or imprisonment for up to one year, depending on the program and conduct involved. Personally identifiable information on this form is not intended to be used for any other purpose. NOTE: See instructions for more information, including where the completed form should be sent.

State of Wisconsin
Department of Natural Resources

# SOIL BORING LOG INFORMATION

Form 4400-122 Rev. 7-98

Route To: Watershed/Wastewater ☐ Waste Management ☐
Remediation/Revelopment ☒ Other ☐ _____

Page 1 of 1

| Facility/Project Name | License/Permit/Monitoring Number | Boring Number |
|---|---|---|
| 500 Barclay | | SB-50 / TW-50 |

| Boring Drilled By: Name of crew chief (first, last) and Firm | Date Drilling Started | Date Drilling Completed | Drilling Method |
|---|---|---|---|
| First Name: Mike Last Name: Firm: Bestra | m m / d d / y y y y | m m / d d / y y y y | Direct Push |

| WI Unique Well No. | DNR Well ID No. | Well Name | Final Static Water Level | Surface Elevation | Borehole Diameter |
|---|---|---|---|---|---|
| _ _ _ _ _ | _ _ _ | | _____ Feet MSL | _____ Feet MSL | _____ inches |

Local Grid Origin ☐ (estimated: ☐ ) or Boring Location ☐
State Plane _____ N, _____ E
_____ 1/4 of _____ 1/4 of Section _____, T _____ N, R _____
Lat ___ ° ___ ' ___ "
Long ___ ° ___ ' ___ "
Local Grid Location ☐ N ☐ E _____ Feet ☐ S _____ Feet ☐ W

| Facility ID | County | County Code | Civil Town/City/ or Village |
|---|---|---|---|
| | Milwaukee | 41 | City of Milwaukee |

| Sample Number and Type | Length Att. & Recovered (in) | Blow Counts | Depth in Feet (Below ground surface) | Soil/Rock Description And Geologic Origin For Each Major Unit | U S C S | Graphic Log | Well Diagram | PID/FID | Soil Properties: Compressive Strength | Moisture Content | Liquid Limit | Plasticity Index | P 200 | RQD/ Comments |
|---|---|---|---|---|---|---|---|---|---|---|---|---|---|---|
| *concrete 4" | | | | 4" med-coarse angular gravel, w/silt, black | | | | 49 | 5 | | | | | |
| | 12 | | | 8" med-coarse gravel ang. w/brick and silt, black | | | | — 38 | 2 5 | | | | | |
| | | | 5 | | | | | — 19.8 | 4 | | | | | |
| | 18 | | | 4" fine-med ang. gravel, w/silt, black; 4" clay w/silt, grey w/ black mottling; 10" silt w/fine sand, wood w/ fine-med. ang. gravel, grey | | | | — 154 — 150 | 6 1 8 10 | | | | | |
| | | | 10 | | | | | | | | | | | |
| | 12 | | | 6" clay w/ trace silt, trace fine subang. gravel grey; 6" silt w/ trace fine-med ang. gravel, grey | | | | 497 — 497 | 12 | wet | | | | |
| | | | 15 | | | | | | 15 | | | | | |

I hereby certify that the information on this form is true and correct to the best of my knowledge.

Signature: [signature] Firm: KEY Engineering

This form is authorized by Chapters 281, 283, 289, 291, 292, 293, 295, and 299, Wis. Stats. Completion of this form is mandatory. Failure to file this form may result in forfeiture of between $10 and $25,000, or imprisonment for up to one year, depending on the program and conduct involved. Personally identifiable information on this form is not intended to be used for any other purpose. NOTE: See instructions for more information, including where the completed form should be sent.

State of Wisconsin
Department of Natural Resources

# SOIL BORING LOG INFORMATION

Form 4400-122 Rev. 7-98

Route To: Watershed/Wastewater ☐ Waste Management ☐
Remediation/Revelopment ☒ Other ☐ _____

Page 1 of 1

| | | |
|---|---|---|
| Facility/Project Name: 300 Barclay | License/Permit/Monitoring Number | Boring Number: SB-51/MW-51 |
| Boring Drilled By: Name of crew chief (first, last) and Firm — First Name: Mike; Last Name: ; Firm: Geotra | Date Drilling Started: 09.09.2016 (mm dd yyyy) | Date Drilling Completed: 09.09.2016 (mm dd yyyy) — Drilling Method: Direct Push |
| WI Unique Well No. ___ | DNR Well ID No. ___ — Well Name ___ | Final Static Water Level ___ Feet MSL — Surface Elevation ___ Feet MSL — Borehole Diameter: 2 inches |
| Local Grid Origin ☐ (estimated: ☐) or Boring Location ☐ — State Plane ___ N, ___ E | Lat ___ ° ___ ' ___ " — Long ___ ° ___ ' ___ " | Local Grid Location ___ Feet ☐ N ☐ S ___ Feet ☐ E ☐ W |
| ___ 1/4 of ___ 1/4 of Section ___, T ___ N, R ___ | | |
| Facility ID | County: Milwaukee | County Code: 41 — Civil Town/City/ or Village: City of Milwaukee |

| Sample: Number and Type | Length Att. & Recovered (in) | Blow Counts | Depth in Feet (Below ground surface) | Soil/Rock Description And Geologic Origin For Each Major Unit | USCS | Graphic Log | Well Diagram | PID/FID | Compressive Strength | Moisture Content | Liquid Limit | Plasticity Index | P 200 | RQD/ Comments |
|---|---|---|---|---|---|---|---|---|---|---|---|---|---|---|
| ~~concrete~~ 4" | | | | 2" med-coarse gravel w/ trace silt, black | | | | 38.0 | | | | | | |
| | 24 | | | 2" silt w/ some gravel, fine ang. black | | | | 2 | | | | | | |
| | | | | 2" fine-med ang. gravel w/ trace silt, black | | | | 12.6 | | | | | | |
| | | | | 18" silt, w/ some fine-med ang gravel, wood and black material | | | | 4 | | | | | | |
| | | | 5 | | | | | 10.7 | | | | | | |
| | | | | 12" fine-coarse ang. gravel, w/ trace silt and brick, black | | | | 6 | | | | | | |
| | 36 | | | 18" fine sand w/ silt and trace fine to med ang gravel, black | | | | 20.3 | | wet | | | | |
| | | | | 4" fine-med ang. gravel w/ silt fine to coarse metallic material black | | | | 8 | | | | | | |
| | | | | 2" fine-med sand w/ fine ang gravel, grey | | | | 190.5 | | | | | | |
| | | | 10 | | | | | 10 | | | | | | |
| | | | | 12" silt w/ trace med ang gravel angular, grey w/ orange mottling | | | | 6.8 | | | | | | |
| | 42 | | | 4" clay, mod tough, w/ trace med-coarse gravel, grey | | | | 12 | | | | | | |
| | | | | 26" silt w/ clay, trace fine ang. gravel, w/ trace orange mottling, grey | | | | 9.3 | | | | | | |
| | | | 15 | | | | | 15 | | | | | | |

I hereby certify that the information on this form is true and correct to the best of my knowledge.

Signature: [signature] Firm: KEY Engineering

This form is authorized by Chapters 281, 283, 289, 291, 292, 293, 295, and 299, Wis. Stats. Completion of this form is mandatory. Failure to file this form may result in forfeiture of between $10 and $25,000, or imprisonment for up to one year, depending on the program and conduct involved. Personally identifiable information on this form is not intended to be used for any other purpose. NOTE: See instructions for more information, including where the completed form should be sent.

State of Wisconsin
Department of Natural Resources

# SOIL BORING LOG INFORMATION

Form 4400-122 Rev. 7-98

Route To: Watershed/Wastewater ☐ Waste Management ☐ Remediation/Revelopment ☒ Other ☐ _____



| | | | |
|---|---|---|---|
| Facility/Project Name: 300 S. Barclay | License/Permit/Monitoring Number | Boring Number: SB-55 | |
| Boring Drilled By: Name of crew chief (first, last) and Firm — First Name: Mike; Last Name: ; Firm: Lesfra | Date Drilling Started: 09/13/2016 | Date Drilling Completed: 09/13/2016 | Drilling Method: Hand Auger |
| WI Unique Well No. | DNR Well ID No. | Well Name | Final Static Water Level: ____ Feet MSL |
| Surface Elevation: ____ Feet MSL | Borehole Diameter: 2 inches | | |
| Local Grid Origin ☐ (estimated: ☐ ) or Boring Location ☐ State Plane ____ N, ____ E | Lat ___ ° ___ ' ___ " Long ___ ° ___ ' ___ " | Local Grid Location: ____ Feet ☐ N ☐ S ____ Feet ☐ E ☐ W | |
| ____ 1/4 of ____ 1/4 of Section ____, T ____ N, R ____ | | | |
| Facility ID: 241029470 | County: Milwaukee | County Code: ____ | Civil Town/City/ or Village: Milwaukee |

| Sample Number and Type | Length Att. & Recovered (in) | Blow Counts | Depth in Feet (Below ground surface) | Soil/Rock Description And Geologic Origin For Each Major Unit | USCS | Graphic Log | Well Diagram | PID/FID | Soil Properties: Compressive Strength | Moisture Content | Liquid Limit | Plasticity Index | P 200 | RQD/ Comments |
|---|---|---|---|---|---|---|---|---|---|---|---|---|---|---|
| | | | 0 | 11" concrete | | | | | | | | | | |
| LP-1 | 18/24 | | 1 | 1-3 ft<br>2" gravel w/ silt. Med to coarse A. Gray<br>1'2"-3'<br>Silt w/ clay. Gray. | | | | 0-2 1.5<br>2-4 1.1 | | Da mp | | | | Sampled at 0-2, 8-10 |
| LP-2 | 8/24 | | 3 | 3-5 ft<br>Silt w/ clay. Wood present. | | | | 4-6 1.1 | | Da mp | | | | |
| LP-3 | 18/24 | | 5 | 5-7 ft<br>Same as 3-5 ft above. | | | | 6-8 1.4 | | Da mp | | | | |
| LP-4 | 18/24 | | 7 | 7-9 ft<br>8" Tan clay w/ silt. Med A gravel - trace.<br>7'5"-9'<br>Black silt. organic matter. Roots | | | | 8-10 2.0 | | Da mp | | | | |
| | | | 9 | | | | | | | | | | | |

I hereby certify that the information on this form is true and correct to the best of my knowledge.

Signature: [signature] Firm: Key Engineering Group

This form is authorized by Chapters 281, 283, 289, 291, 292, 293, 295, and 299, Wis. Stats. Completion of this form is mandatory. Failure to file this form may result in forfeiture of between $10 and $25,000, or imprisonment for up to one year, depending on the program and conduct involved. Personally identifiable information on this form is not intended to be used for any other purpose. NOTE: See instructions for more information, including where the completed form should be sent.

| Sample Number and Type | Sample Length Att. & Recovered (in) | Blow Counts | Depth in Feet | Soil/Rock Description And Geologic Origin For Each Major Unit | USCS | Graphic Log | Well Diagram | PID/FID | Soil Properties: Compressive Strength | Moisture Content | Liquid Limit | Plasticity Index | P 200 | RQD/ Comments |
|---|---|---|---|---|---|---|---|---|---|---|---|---|---|---|
| GP-5 | 12/24 | | 9 | 9-11 ft<br>8" same as 7'8"-9' above<br>9'8"-11'<br>Fine to med sand w/ silt. Trace shells. Gray. | | | | 10-12<br>1.8 | | w | | | | |
| | | | 11 | E.O.B. at 11 ft. | | | | | | | | | | |

State of Wisconsin
Department of Natural Resources

**SOIL BORING LOG INFORMATION**
Form 4400-122 Rev. 7-98

Route To: Watershed/Wastewater ☐ Waste Management ☐
Remediation/Revelopment ☒ Other ☐ _____

Page 1 of 2

| Facility/Project Name | License/Permit/Monitoring Number | Boring Number |
|---|---|---|
| 300 S. Barclay | | SB-57/TW-57 |

| Boring Drilled By: Name of crew chief (first, last) and Firm | Date Drilling Started | Date Drilling Completed | Drilling Method |
|---|---|---|---|
| First Name: Mike Last Name: Firm: Lestra | 09/12/2016 (mm dd yyyy) | 09/12/2016 (mm dd yyyy) | Hand Auger |

| WI Unique Well No. | DNR Well ID No. | Well Name | Final Static Water Level | Surface Elevation | Borehole Diameter |
|---|---|---|---|---|---|
| | | | Feet MSL | Feet MSL | 2 inches |

Local Grid Origin ☐ (estimated: ☐ ) or Boring Location ☐
State Plane _____ N, _____ E
____ 1/4 of ____ 1/4 of Section ____, T ____ N, R ____
Lat ° ' "
Long ° ' "
Local Grid Location ____ Feet ☐ N ☐ S ____ Feet ☐ E ☐ W

| Facility ID | County | County Code | Civil Town/City/ or Village |
|---|---|---|---|
| 241029470 | Milwaukee | | Milwaukee |

| Sample Number and Type | Length Att. & Recovered (in) | Blow Counts | Depth in Feet (Below ground surface) | Soil/Rock Description And Geologic Origin For Each Major Unit | U S C S | Graphic Log | Well Diagram | PID/FID | Compressive Strength | Moisture Content | Liquid Limit | Plasticity Index | P 200 | RQD/ Comments |
|---|---|---|---|---|---|---|---|---|---|---|---|---|---|---|
| | | | 0 | 8" Concrete | | | | | | | | | | |
| GP-1 | 18/24 | | 1 | 1-3 ft<br>2" silt w/ fine sand and fine, ∡ gravel. Black.<br>8" clay w/ silt and fine, ∡ gravel. Gray.<br>1'10"-3'<br>Tan silt w/ clay and fine to med, ∡ gravel. Dark modelling. | | | | 0-2<br>139<br>2-4<br>54.7 | | D | | | | Sampled 0-2, 8-10 |
| GP-2 | 16/24 | | 3 | 3-5 ft<br>3" same as 1'10"-3' above.<br>1" Gravel w/ silt. Fine to med. Black.<br>3" silt w/ wood. Black.<br>3'7"-5'<br>silt w/ fine sand. Tan. | | | | 4-6<br>60.1 | | D | | | | |
| | | | 5 | | | | | | | | | | | |

I hereby certify that the information on this form is true and correct to the best of my knowledge.

| Signature | Firm |
|---|---|
| [signature] | Key Engineering Group |

This form is authorized by Chapters 281, 283, 289, 291, 292, 293, 295, and 299, Wis. Stats. Completion of this form is mandatory. Failure to file this form may result in forfeiture of between $10 and $25,000, or imprisonment for up to one year, depending on the program and conduct involved. Personally identifiable information on this form is not intended to be used for any other purpose. NOTE: See instructions for more information, including where the completed form should be sent.

| Sample: Number and Type | Sample: Length Att. & Recovered (in) | Blow Counts | Depth in Feet | Soil/Rock Description And Geologic Origin For Each Major Unit | USCS | Graphic Log | Well Diagram | PID/FID | Soil Properties: Compressive Strength | Soil Properties: Moisture Content | Soil Properties: Liquid Limit | Soil Properties: Plasticity Index | Soil Properties: P 200 | RQD/ Comments |
|---|---|---|---|---|---|---|---|---|---|---|---|---|---|---|
| | | | 5 | | | | | | | | | | | |
| LP-3 | 12/24 | | | 5-7 ft<br>Tan clay w/ silt. 1.5" ribbon. | | | | 6-8<br>17.0 | | Dq mp. | | | | |
| | | | 7 | | | | | | | | | | | |
| LP-4 | 10/24 | | | 7-9 ft<br>Black silt organic, roots. wood | | | | 8-10<br>25.4 | | Dq mp | | | | |
| | | | 9 | | | | | | | | | | | |
| LP-5 | 18/24 | | | 9-11 ~~ft~~<br>10" Black silt w/ organics.<br>9'10"-11'<br>Fine to med sand and silt Brown, shells present. | | | | | | W | | | | |
| | | | 11 | E.O.B. @ 11 ft. | | | | | | | | | | |

State of Wisconsin
Department of Natural Resources

# SOIL BORING LOG INFORMATION

Form 4400-122 Rev. 7-98

Route To: Watershed/Wastewater ☐ Waste Management ☐
Remediation/Revelopment ☒ Other ☐ _____

Page 1 of 1

| | | |
|---|---|---|
| Facility/Project Name: 300 Barclay | License/Permit/Monitoring Number | Boring Number: SB-63 |
| Boring Drilled By: Name of crew chief (first, last) and Firm — First Name: Mike; Last Name: ; Firm: Geotra | Date Drilling Started: 09/09/2016 (m m d d y y y y) | Date Drilling Completed: 09/09/2016 (m m d d y y y y); Drilling Method: Direct Push |
| WI Unique Well No. ___ | DNR Well ID No. ___ | Well Name ___ |
| Final Static Water Level: ____ Feet MSL | Surface Elevation: ____ Feet MSL | Borehole Diameter: 2 inches |
| Local Grid Origin ☐ (estimated: ☐ ) or Boring Location ☐ — State Plane ____ N, ____ E; ____ 1/4 of ____ 1/4 of Section ____, T ____ N, R ____ | Lat ° ' "; Long ° ' " | Local Grid Location: ____ Feet ☐ N ☐ S ____ Feet ☐ E ☐ W |
| Facility ID | County: Milwaukee | County Code: 41 |
| Civil Town/City/ or Village: City of Milwaukee | | |

| Sample Number and Type | Length Att. & Recovered (in) | Blow Counts | Depth in Feet (Below ground surface) | Soil/Rock Description And Geologic Origin For Each Major Unit | USCS | Graphic Log | Well Diagram | PID/FID | Compressive Strength | Moisture Content | Liquid Limit | Plasticity Index | P 200 | RQD/ Comments |
|---|---|---|---|---|---|---|---|---|---|---|---|---|---|---|
| | 30 | | | 2" fine-coarse gravel w/silt, brown | | | | 8.9 | | | | | | |
| | | | | 1" coarse sand, tan | | | | — | 2 | | | | | |
| | | | | 6" silt w/ crushed rock and med ang. gravel, tan | | | | 33.4 | | | | | | |
| | | | | 5" crushed brick | | | | — | 4 | | | | | |
| | | | | 16" crushed rock w/silt brown | | | | 32.9 | | | | | | |
| | | | 5 | | | | | | | | | | | |
| | 18 | | | 9" rock, and wood | | | | — | 6 | | | | | |
| | | | | 9" clay w/silt, mod stiff, mod plast. grey | | | | 110.4 | | | | | | |
| | | | | | | | | — | 8 | | | | | |
| | | | | | | | | 23.2 | | | | | | |
| | | | 10 | | | | | | 10 | | | | | |
| | 18 | | | 18" silt, grey | | | | 99.2 | | | | | | |
| | | | 12 | | | | | | 12 | | | | | |
| | | | 15 | EOB @ 12' | | | | | | | | | | |

I hereby certify that the information on this form is true and correct to the best of my knowledge.

Signature: [signature] Firm: KEY Engineering

This form is authorized by Chapters 281, 283, 289, 291, 292, 293, 295, and 299, Wis. Stats. Completion of this form is mandatory. Failure to file this form may result in forfeiture of between $10 and $25,000, or imprisonment for up to one year, depending on the program and conduct involved. Personally identifiable information on this form is not intended to be used for any other purpose. NOTE: See instructions for more information, including where the completed form should be sent.

State of Wisconsin
Department of Natural Resources

# SOIL BORING LOG INFORMATION

Form 4400-122 Rev. 7-98

Route To: Watershed/Wastewater ☐ Waste Management ☐
Remediation/Revelopment ☒ Other ☐ _____

Page 1 of 1

| | | |
|---|---|---|
| Facility/Project Name: 300 S. Barclay | License/Permit/Monitoring Number | Boring Number: SB-106 |
| Boring Drilled By: Name of crew chief (first, last) and Firm<br>First Name: Dan Last Name: Fisher<br>Firm: Horizon | Date Drilling Started: 09/16/2016 (mm dd yyyy) | Date Drilling Completed: 09/16/2016 (mm dd yyyy) |
| Drilling Method: Direct Push | | |
| WI Unique Well No. _ _ _ _ _ _ | DNR Well ID No. _ _ _ _ _ | Well Name |
| Final Static Water Level: _____ Feet MSL | Surface Elevation: _____ Feet MSL | Borehole Diameter: 2 inches |
| Local Grid Origin ☐ (estimated: ☐ ) or Boring Location ☐<br>State Plane _____ N, _____ E<br>____ 1/4 of ____ 1/4 of Section ____, T ____ N, R ____ | Lat ___ ° ___ ' ___ "<br>Long ___ ° ___ ' ___ " | Local Grid Location<br>_____ Feet ☐ N ☐ S _____ Feet ☐ E ☐ W |
| Facility ID | County: Milwaukee | County Code: 41 |
| Civil Town/City/ or Village: City of Milwaukee | | |

| Sample Number and Type | Length Att. & Recovered (in) | Blow Counts | Depth in Feet (Below ground surface) | Soil/Rock Description And Geologic Origin For Each Major Unit | USCS | Graphic Log | Well Diagram | PID/FID | Soil Properties: Compressive Strength | Moisture Content | Liquid Limit | Plasticity Index | P 200 | RQD/ Comments |
|---|---|---|---|---|---|---|---|---|---|---|---|---|---|---|
| | 48 | | 5 | 2" Crushed concrete<br>2" med-coarse gravel, angular<br>8" silty/med sand, fine-med gravel, angular, brown/orange<br>18" silty/fine-med ang. gravel, black<br>18" silty/fine-med ang. gravel. wood, black | | | | | | Dry | | | | |
| | 42 | | 10 | 3" silty/fine-med ang. gravel, wood, black<br>2" silty/trace clay, soft, grey<br>4" fine-med gravel, ang. w/silt, black<br>33" clay w/silt, soft, tacky, grey low plasticity | | | | | | Damp | | | | |
| | 24 | | 12 | 24" clay w/silt, soft, tacky low plasticity, grey | | | | | | | | | | |
| | | | | EOBE 12' | | | | | | | | | | |

I hereby certify that the information on this form is true and correct to the best of my knowledge.

Signature: [signature] Firm: KEY Engineering

This form is authorized by Chapters 281, 283, 289, 291, 292, 293, 295, and 299, Wis. Stats. Completion of this form is mandatory. Failure to file this form may result in forfeiture of between $10 and $25,000, or imprisonment for up to one year, depending on the program and conduct involved. Personally identifiable information on this form is not intended to be used for any other purpose. NOTE: See instructions for more information, including where the completed form should be sent.

State of Wisconsin
Department of Natural Resources

# SOIL BORING LOG INFORMATION

Form 4400-122 Rev. 7-98

Route To: Watershed/Wastewater ☐ Waste Management ☐
Remediation/Revelopment ☒ Other ☐ _____

Page 1 of 1

| | | |
|---|---|---|
| Facility/Project Name: 300 S. Barclay | License/Permit/Monitoring Number | Boring Number: SB-67 |
| Boring Drilled By: Name of crew chief (first, last) and Firm<br>First Name: Dan Last Name: Fisher<br>Firm: Horizon | Date Drilling Started: 09/16/2016 (m m d d y y y y) | Date Drilling Completed: 09/16/2016 (m m d d y y y y) |
| Drilling Method: Direct Push | | |
| WI Unique Well No. _ _ _ _ _ _ | DNR Well ID No. _ _ _ | Well Name |
| Final Static Water Level: _____ Feet MSL | Surface Elevation: _____ Feet MSL | Borehole Diameter: 2 inches |
| Local Grid Origin ☐ (estimated: ☐ ) or Boring Location ☐<br>State Plane _____ N, _____ E<br>_____ 1/4 of _____ 1/4 of Section _____, T _____ N, R _____ | Lat ___ ° ___ ' ___ "<br>Long ___ ° ___ ' ___ " | Local Grid Location<br>_____ Feet ☐ N ☐ S _____ Feet ☐ E ☐ W |
| Facility ID | County: Milwaukee | County Code: 41 |
| Civil Town/City/ or Village: City of Milwaukee | | |

| Sample Number and Type | Length Att. & Recovered (in) | Blow Counts | Depth in Feet (Below ground surface) | Soil/Rock Description And Geologic Origin For Each Major Unit | USCS | Graphic Log | Well Diagram | PID/FID | Soil Properties: Compressive Strength | Moisture Content | Liquid Limit | Plasticity Index | P 200 | RQD/ Comments |
|---|---|---|---|---|---|---|---|---|---|---|---|---|---|---|
| | | | | 4" brick | | | | | | | | | | |
| | 30 | | | 4" crushed gravel w/ silt<br>22" silt w/ fine-med gravel angular, wood, black w/ orange mottling | | | | | | Dry | | | | |
| | | | 5 | | | | | | | | | | | |
| | 30 | | | 24" silt w/ fine gravel angular, slag, black<br>6" silt w/ trace clay, soft tacky, grey w/ black mottling | | | | | | Wet | | | | |
| | | | 10 | | | | | | | | | | | |
| | 4 | | | 4" silt w/ trace clay, soft, tacky, grey w/ black mottling | | | | | | | | | | |
| | | | 12 | EOB @ 12' | | | | | | | | | | |

I hereby certify that the information on this form is true and correct to the best of my knowledge.

Signature: [signature] Firm: KEY Engineering

This form is authorized by Chapters 281, 283, 289, 291, 292, 293, 295, and 299, Wis. Stats. Completion of this form is mandatory. Failure to file this form may result in forfeiture of between $10 and $25,000, or imprisonment for up to one year, depending on the program and conduct involved. Personally identifiable information on this form is not intended to be used for any other purpose. NOTE: See instructions for more information, including where the completed form should be sent.

State of Wisconsin
Department of Natural Resources

**SOIL BORING LOG INFORMATION**
Form 4400-122 Rev. 7-98

Route To: Watershed/Wastewater ☐ Waste Management ☐
Remediation/Revelopment ☒ Other ☐ _____

Page 1 of 1

| | | | |
|---|---|---|---|
| Facility/Project Name: 300 S. Barclay | License/Permit/Monitoring Number | Boring Number: SB-68 | |
| Boring Drilled By: Name of crew chief (first, last) and Firm<br>First Name: Dan Last Name: Fisher<br>Firm: Horizon | Date Drilling Started: 09/16/2016 (mm dd yyyy) | Date Drilling Completed: 09/16/2016 (mm dd yyyy) | Drilling Method: Direct Push |
| WI Unique Well No. ___ DNR Well ID No. ___ Well Name | Final Static Water Level ___ Feet MSL | Surface Elevation ___ Feet MSL | Borehole Diameter 2 inches |
| Local Grid Origin ☐ (estimated: ☐ ) or Boring Location ☐<br>State Plane ___ N, ___ E<br>___ 1/4 of ___ 1/4 of Section ___, T ___ N, R ___ | Lat ° ' "<br>Long ° ' " | Local Grid Location<br>___ Feet ☐ N ☐ S ___ Feet ☐ E ☐ W | |
| Facility ID | County: Milwaukee | County Code: 41 | Civil Town/City/ or Village: City of Milwaukee |

| Sample Number and Type | Length Att. & Recovered (in) | Blow Counts | Depth in Feet (Below ground surface) | Soil/Rock Description And Geologic Origin For Each Major Unit | U S C S | Graphic Log | Well Diagram | PID/FID | Soil Properties: Compressive Strength | Moisture Content | Liquid Limit | Plasticity Index | P 200 | RQD/ Comments |
|---|---|---|---|---|---|---|---|---|---|---|---|---|---|---|
| | 24 | | | 4" asphalt<br>4" med-coarse ang. gravel<br>16" silt w/ brick, wood, fine-coarse gravel ang. black | | | | | | Dry | | | | |
| | 36 | | 5 | 24" fine-med gravel, ang. silt, black<br>6" silt, crumbly, roots, black<br>6" silt, grey | | | | | | Wet | | | | |
| | 36 | | 10 | 36" silt, grey | | | | | | | | | | |
| | | | 15 | | | | | | | | | | | |

I hereby certify that the information on this form is true and correct to the best of my knowledge.

Signature: [signature] Firm: KEY Engineering

This form is authorized by Chapters 281, 283, 289, 291, 292, 293, 295, and 299, Wis. Stats. Completion of this form is mandatory. Failure to file this form may result in forfeiture of between $10 and $25,000, or imprisonment for up to one year, depending on the program and conduct involved. Personally identifiable information on this form is not intended to be used for any other purpose. NOTE: See instructions for more information, including where the completed form should be sent.

State of Wisconsin
Department of Natural Resources

# SOIL BORING LOG INFORMATION

Form 4400-122 Rev. 7-98

Route To: Watershed/Wastewater ☐ Waste Management ☐
Remediation/Revelopment ☒ Other ☐ _____

Page 1 of 1

| | | | |
|---|---|---|---|
| Facility/Project Name: 300 S. Barclay | License/Permit/Monitoring Number | Boring Number: SB-71 | |
| Boring Drilled By: Name of crew chief (first, last) and Firm<br>First Name: Dan Last Name: Fisher<br>Firm: Horizon | Date Drilling Started: 09/16/2016 (mm dd yyyy) | Date Drilling Completed: 09/16/2016 (mm dd yyyy) | Drilling Method: Direct Push |
| WI Unique Well No. _ _ _ _ _ | DNR Well ID No. _ _ _ | Well Name | Final Static Water Level: _____ Feet MSL |
| Surface Elevation: _____ Feet MSL | Borehole Diameter: 2 inches | | |
| Local Grid Origin ☐ (estimated: ☐ ) or Boring Location ☐<br>State Plane _____ N, _____ E<br>_____ 1/4 of _____ 1/4 of Section _____, T _____ N, R _____ | Lat ___ ° ___ ' ___ "<br>Long ___ ° ___ ' ___ " | Local Grid Location<br>_____ Feet ☐ N ☐ S _____ Feet ☐ E ☐ W | |
| Facility ID | County: Milwaukee | County Code: 41 | Civil Town/City/ or Village: City of Milwaukee |

| Sample Number and Type | Length Att. & Recovered (in) | Blow Counts | Depth in Feet (Below ground surface) | Soil/Rock Description And Geologic Origin For Each Major Unit | USCS | Graphic Log | Well Diagram | PID/FID | Soil Properties: Compressive Strength | Moisture Content | Liquid Limit | Plasticity Index | P 200 | RQD/ Comments |
|---|---|---|---|---|---|---|---|---|---|---|---|---|---|---|
| | 24 | | 5 | 4" asphalt<br>4" med-coarse gravel<br>16" silt w/ brick, wood, fine-coarse ang. gravel, black | | | | | | Dry | | | | |
| | 36 | | 10 | 24" silt w/ med sand, fine-med ang. gravel, black<br>12" silt w/ clay, trace, soft, med gravel ang. grey | | | | | | Ex | | | | |
| | | | 15 | no recovery | | | | | | | | | | |

I hereby certify that the information on this form is true and correct to the best of my knowledge.

Signature: [illegible] Firm: KEY Engineering

This form is authorized by Chapters 281, 283, 289, 291, 292, 293, 295, and 299, Wis. Stats. Completion of this form is mandatory. Failure to file this form may result in forfeiture of between $10 and $25,000, or imprisonment for up to one year, depending on the program and conduct involved. Personally identifiable information on this form is not intended to be used for any other purpose. NOTE: See instructions for more information, including where the completed form should be sent.

State of Wisconsin
Department of Natural Resources

# SOIL BORING LOG INFORMATION

Form 4400-122 Rev. 7-98

Route To: Watershed/Wastewater ☐ Waste Management ☐
Remediation/Revelopment ☒ Other ☐ _____

Page 1 of 1

| | | |
|---|---|---|
| Facility/Project Name: 300 S. Barclay | License/Permit/Monitoring Number | Boring Number: SB-72 |
| Boring Drilled By: Name of crew chief (first, last) and Firm<br>First Name: Dan Last Name: Fisher<br>Firm: Honzan | Date Drilling Started: 09/16/2016 (mm dd yyyy) | Date Drilling Completed: 09/16/2016 (mm dd yyyy) |
| Drilling Method: Direct Push | | |
| WI Unique Well No. _ _ _ _ _ | DNR Well ID No. _ _ _ | Well Name |
| Final Static Water Level: _____ Feet MSL | Surface Elevation: _____ Feet MSL | Borehole Diameter: 2 inches |
| Local Grid Origin ☐ (estimated: ☐ ) or Boring Location ☐<br>State Plane _____ N, _____ E<br>____ 1/4 of ____ 1/4 of Section ____, T ____ N, R ____ | Lat ___ ° ___ ' ___ "<br>Long ___ ° ___ ' ___ " | Local Grid Location<br>☐ N ☐ E<br>____ Feet ☐ S ____ Feet ☐ W |
| Facility ID | County: Milwaukee | County Code: 4 |
| Civil Town/City/or Village: City of Milwaukee | | |

| Sample: Number and Type | Length Att. & Recovered (in) | Blow Counts | Depth in Feet (Below ground surface) | Soil/Rock Description And Geologic Origin For Each Major Unit | U S C S | Graphic Log | Well Diagram | PID/FID | Soil Properties: Compressive Strength | Moisture Content | Liquid Limit | Plasticity Index | P 200 | RQD/ Comments |
|---|---|---|---|---|---|---|---|---|---|---|---|---|---|---|
| | 24 | | | 4" asphalt<br>2" med-coarse ang. gravel<br>4" silty med-coarse gravel angular, black<br>2" wood<br>12" fine-med ang. gravel, w/silt, black | | | | | | | | | | |
| | | | 4 | EOBR 4' | | | | | | | | | | |

I hereby certify that the information on this form is true and correct to the best of my knowledge.

Signature: [signature] Firm: KEY Engineering

This form is authorized by Chapters 281, 283, 289, 291, 292, 293, 295, and 299, Wis. Stats. Completion of this form is mandatory. Failure to file this form may result in forfeiture of between $10 and $25,000, or imprisonment for up to one year, depending on the program and conduct involved. Personally identifiable information on this form is not intended to be used for any other purpose. NOTE: See instructions for more information, including where the completed form should be sent.

State of Wisconsin
Department of Natural Resources

# SOIL BORING LOG INFORMATION

Form 4400-122 Rev. 7-98

Route To: Watershed/Wastewater ☐ Waste Management ☐
Remediation/Revelopment ☒ Other ☐ _____

Page 1 of 1

| | | |
|---|---|---|
| Facility/Project Name: 300 S. Barclay | License/Permit/Monitoring Number | Boring Number: SB-79 |
| Boring Drilled By: Name of crew chief (first, last) and Firm<br>First Name: Dan Last Name: Fisher<br>Firm: Hontan | Date Drilling Started: 09/20/2016 (mm dd yyyy) | Date Drilling Completed: 09/20/2016 (mm dd yyyy) |
| Drilling Method: Direct Push | | |
| WI Unique Well No. _ _ _ _ _ _ | DNR Well ID No. _ _ _ | Well Name |
| Final Static Water Level: _____ Feet MSL | Surface Elevation: _____ Feet MSL | Borehole Diameter: 2 inches |
| Local Grid Origin ☐ (estimated: ☐ ) or Boring Location ☐<br>State Plane _____ N, _____ E<br>_____ 1/4 of _____ 1/4 of Section _____, T _____ N, R _____ | Lat ___ ° ___ ' ___ "<br>Long ___ ° ___ ' ___ " | Local Grid Location<br>_____ Feet ☐ N ☐ S<br>_____ Feet ☐ E ☐ W |
| Facility ID | County: Milwaukee | County Code: 41 |
| Civil Town/City/or Village: City of Milwaukee | | |

| Sample Number and Type | Length Att. & Recovered (in) | Blow Counts | Depth in Feet (Below ground surface) | Soil/Rock Description And Geologic Origin For Each Major Unit | USCS | Graphic Log | Well Diagram | PID/FID | Soil Properties: Compressive Strength | Moisture Content | Liquid Limit | Plasticity Index | P 200 | RQD/ Comments |
|---|---|---|---|---|---|---|---|---|---|---|---|---|---|---|
| | 24 | | | 18" silty trace fine-med angular gravel, brown<br>2" wood chips<br>8" fine | | | | | | 23 | | | | |
| | | | 5 | | | | | | | | | | | |
| | 24 | | | 24" fine-med angular gravel, w/silt, black and green | | | | | | 42 | | | | |
| | | | 8 | | | | | | | | | | | |
| | | | | EOBC 8 | | | | | | | | | | |

I hereby certify that the information on this form is true and correct to the best of my knowledge.

Signature: [signature] Firm: KEY Engineering

This form is authorized by Chapters 281, 283, 289, 291, 292, 293, 295, and 299, Wis. Stats. Completion of this form is mandatory. Failure to file this form may result in forfeiture of between $10 and $25,000, or imprisonment for up to one year, depending on the program and conduct involved. Personally identifiable information on this form is not intended to be used for any other purpose. NOTE: See instructions for more information, including where the completed form should be sent.

State of Wisconsin
Department of Natural Resources

# SOIL BORING LOG INFORMATION

Form 4400-122 Rev. 7-98

Route To: Watershed/Wastewater ☐ Waste Management ☐
Remediation/Revelopment ☒ Other ☐ _____

Page 1 of 1

| | | | |
|---|---|---|---|
| Facility/Project Name: 300 S. Barclay | License/Permit/Monitoring Number | Boring Number: SB-80 | |
| Boring Drilled By: Name of crew chief (first, last) and Firm<br>First Name: Dan Last Name: Fisher<br>Firm: Honzan | Date Drilling Started: 09/16/2016 (mm dd yyyy) | Date Drilling Completed: 09/16/2016 (mm dd yyyy) | Drilling Method: Direct Push |
| WI Unique Well No. _____ | DNR Well ID No. _____ | Well Name | Final Static Water Level _____ Feet MSL |
| Surface Elevation _____ Feet MSL | Borehole Diameter 2 inches | | |
| Local Grid Origin ☐ (estimated: ☐ ) or Boring Location ☐<br>State Plane _____ N, _____ E<br>____ 1/4 of ____ 1/4 of Section ____, T ____ N, R ____ | Lat ___ ° ___ ' ___ "<br>Long ___ ° ___ ' ___ " | Local Grid Location<br>____ Feet ☐ N ☐ S ____ Feet ☐ E ☐ W | |
| Facility ID | County: Milwaukee | County Code: 41 | Civil Town/City/or Village: City of Milwaukee |

| Sample: Number and Type | Length Att. & Recovered (in) | Blow Counts | Depth in Feet (Below ground surface) | Soil/Rock Description And Geologic Origin For Each Major Unit | USCS | Graphic Log | Well Diagram | PID/FID | Soil Properties: Compressive Strength | Moisture Content | Liquid Limit | Plasticity Index | P 200 | RQD/ Comments |
|---|---|---|---|---|---|---|---|---|---|---|---|---|---|---|
| | 36 | | | 2" asphalt<br>2" med-coarse ang. gravel<br>32" silt w/ fine-med ang. gravel, brick, wood, slag, black | | | | | | Dry | | | | |
| | | | 5 | | | | | | | | | | | |
| | 36 | | | 15" silt w/ clay, soft, crumbly, grey w/ black mottling<br>21" clay w/ silt, med gravel ang., grey | | | | | | Ex | | | | |
| | | | 10 | | | | | | | | | | | |
| | 12 | | | 12" clay w/ silt, med ang. gravel, grey | | | | | | | | | | |
| | | | 12 | EOBE 12 | | | | | | | | | | |

I hereby certify that the information on this form is true and correct to the best of my knowledge.

Signature: [signature] Firm: KEY Engineering

This form is authorized by Chapters 281, 283, 289, 291, 292, 293, 295, and 299, Wis. Stats. Completion of this form is mandatory. Failure to file this form may result in forfeiture of between $10 and $25,000, or imprisonment for up to one year, depending on the program and conduct involved. Personally identifiable information on this form is not intended to be used for any other purpose. NOTE: See instructions for more information, including where the completed form should be sent.

State of Wisconsin
Department of Natural Resources

**SOIL BORING LOG INFORMATION**
Form 4400-122 Rev. 7-98

Route To: Watershed/Wastewater ☐ Waste Management ☐
Remediation/Revelopment ☒ Other ☐ _____

Page 1 of 1

| | | | |
|---|---|---|---|
| Facility/Project Name: 300 S. Barclay | License/Permit/Monitoring Number | Boring Number: SB-81 | |
| Boring Drilled By: Name of crew chief (first, last) and Firm<br>First Name: Dan Last Name: Fisher<br>Firm: Horizon | Date Drilling Started: 09/16/2016 (mm dd yyyy) | Date Drilling Completed: 09/16/2016 (mm dd yyyy) | Drilling Method: Direct Push |
| WI Unique Well No. ___ DNR Well ID No. ___ Well Name | Final Static Water Level ___ Feet MSL | Surface Elevation ___ Feet MSL | Borehole Diameter 2 inches |
| Local Grid Origin ☐ (estimated: ☐ ) or Boring Location ☐<br>State Plane ___ N, ___ E<br>___ 1/4 of ___ 1/4 of Section ___, T ___ N, R ___ | Lat ° ' "<br>Long ° ' " | Local Grid Location<br>___ Feet ☐ N ☐ S ___ Feet ☐ E ☐ W | |
| Facility ID | County: Milwaukee | County Code: 41 | Civil Town/City/ or Village: City of Milwaukee |

| Sample Number and Type | Length Att. & Recovered (in) | Blow Counts | Depth in Feet (Below ground surface) | Soil/Rock Description And Geologic Origin For Each Major Unit | U S C S | Graphic Log | Well Diagram | PID/FID | Soil Properties: Compressive Strength | Moisture Content | Liquid Limit | Plasticity Index | P 200 | RQD/ Comments |
|---|---|---|---|---|---|---|---|---|---|---|---|---|---|---|
| | 30 | | 5 | 3" concrete<br>4" med-coarse gravel, silt, peagravel<br>18" silt w/clay, crumbly, low plast. fine-med gravel, any, brown w/ orange mottling<br>5" silt w/clay, soft, med plast., grey | | | | | | dry | | | | |
| | 24 | | 8 | 18" clay w/silt, crumbly w/trace med gravel, grey<br>2" silt, w/wood, brick, grey<br>4" fine-med gravel, any, silt, black, smell | | | | | | damp | | | | |
| | | | | EOB @ 8' | | | | | | | | | | |

I hereby certify that the information on this form is true and correct to the best of my knowledge.

Signature: [signature] Firm: KEY Engineering

This form is authorized by Chapters 281, 283, 289, 291, 292, 293, 295, and 299, Wis. Stats. Completion of this form is mandatory. Failure to file this form may result in forfeiture of between $10 and $25,000, or imprisonment for up to one year, depending on the program and conduct involved. Personally identifiable information on this form is not intended to be used for any other purpose. NOTE: See instructions for more information, including where the completed form should be sent.

State of Wisconsin
Department of Natural Resources

# SOIL BORING LOG INFORMATION

Form 4400-122 Rev. 7-98

Route To: Watershed/Wastewater ☐ Waste Management ☐
Remediation/Revelopment ☒ Other ☐ _____

Page _____ of _____

| Facility/Project Name | License/Permit/Monitoring Number | Boring Number |
|---|---|---|
| 300 S Barclay | | SB-87 |

| Boring Drilled By: Name of crew chief (first, last) and Firm | Date Drilling Started | Date Drilling Completed | Drilling Method |
|---|---|---|---|
| First Name: Adam Last Name: Sweet Firm: Horizon | 09/20/2016 (mm dd yyyy) | 09/20/2016 (mm dd yyyy) | Direct Push |

| WI Unique Well No. | DNR Well ID No. | Well Name | Final Static Water Level | Surface Elevation | Borehole Diameter |
|---|---|---|---|---|---|
| _ _ _ _ _ _ | _ _ _ | | _____ Feet MSL | _____ Feet MSL | 2 inches |

Local Grid Origin ☐ (estimated: ☐ ) or Boring Location ☐
State Plane _____ N, _____ E
_____ 1/4 of _____ 1/4 of Section _____, T _____ N, R _____

Lat ___ ° ___ ' ___ "
Long ___ ° ___ ' ___ "

Local Grid Location
_____ Feet ☐ N ☐ S _____ Feet ☐ E ☐ W

| Facility ID | County | County Code | Civil Town/City/ or Village |
|---|---|---|---|
| 241029470 | Milwaukee | | Milwaukee |

| Sample Number and Type | Length Att. & Recovered (in) | Blow Counts | Depth in Feet (Below ground surface) | Soil/Rock Description And Geologic Origin For Each Major Unit | USCS | Graphic Log | Well Diagram | PID/FID | Soil Properties: Compressive Strength | Moisture Content | Liquid Limit | Plasticity Index | P 200 | RQD/ Comments |
|---|---|---|---|---|---|---|---|---|---|---|---|---|---|---|
| LP-1 | 4ft 60 Rec 24 | | 0 | 0-5ft<br>6" concrete<br>6" Med to coarse gravel w/ ∅ sand and silt. Black.<br>10" Broken up concrete and brick.<br>Rest<br>Tan clay. High plasticity, 75" ribbon. | | | | 0-2 0.9<br>2-4 1.5<br>4-6 1.4 | | D | | | | |
| | | | 5 | | | | | | | | | | | |
| LP-2 | 4ft 60 Rec 36 | | | 5'-10<br>2" same as "rest" above.<br>Rest<br>silt w/ trace clay, crumbly fine to med trace gravel w/ brick. | | | | 6-8 0.7<br>8-10 0.8 | | W | | | | |
| | | | 10 | | | | | | | | | | | |

I hereby certify that the information on this form is true and correct to the best of my knowledge.

Signature _____ Firm Key Engineering

This form is authorized by Chapters 281, 283, 289, 291, 292, 293, 295, and 299, Wis. Stats. Completion of this form is mandatory. Failure to file this form may result in forfeiture of between $10 and $25,000, or imprisonment for up to one year, depending on the program and conduct involved. Personally identifiable information on this form is not intended to be used for any other purpose. NOTE: See instructions for more information, including where the completed form should be sent.

| Sample: Number and Type | Sample: Length Att. & Recovered (in) | Blow Counts | Depth in Feet | Soil/Rock Description And Geologic Origin For Each Major Unit | USCS | Graphic Log | Well Diagram | PID/FID | Soil Properties: Compressive Strength | Soil Properties: Moisture Content | Soil Properties: Liquid Limit | Soil Properties: Plasticity Index | Soil Properties: P 200 | RQD/ Comments |
|---|---|---|---|---|---|---|---|---|---|---|---|---|---|---|
| LP-3 | 24 in<br>Rec 18 | | 10 | 10-12<br>All<br>Same as "rest" above. | | | | 10-0<br>1.2 | | W | | | | |
| | | | 12 | End of boring at 12 ft. | | | | | | | | | | |

State of Wisconsin
Department of Natural Resources

# SOIL BORING LOG INFORMATION

Form 4400-122 Rev. 7-98

Route To: Watershed/Wastewater ☐ Waste Management ☐
Remediation/Revelopment ☒ Other ☐ _____

Page 1 of 1

| | | |
|---|---|---|
| Facility/Project Name: 300 Barclay | License/Permit/Monitoring Number | Boring Number: GP-2 / TW-2 |
| Boring Drilled By: Name of crew chief (first, last) and Firm — First Name: Dan Last Name: Fischer Firm: Horizon | Date Drilling Started: 08/27/2015 (mm dd yyyy) | Date Drilling Completed: 08/27/2015 (mm dd yyyy) — Drilling Method: Direct Push |
| WI Unique Well No.: _ _ _ _ _ _ — DNR Well ID No.: _ _ _ — Well Name: | Final Static Water Level: ____ Feet MSL | Surface Elevation: ____ Feet MSL — Borehole Diameter: 4 inches |
| Local Grid Origin ☐ (estimated: ☐ ) or Boring Location ☐ — State Plane ____ N, ____ E — SE 1/4 of NE 1/4 of Section 32, T 7 N, R 22 E | Lat ° ' " — Long ° ' " | Local Grid Location: ____ Feet ☐ N ☐ S ____ Feet ☐ E ☐ W |
| Facility ID: 241029470 | County: Milwaukee | County Code: 40 — Civil Town/City/ or Village: Milwaukee |

| Sample Number and Type | Length Att. & Recovered (in) | Blow Counts | Depth in Feet (Below ground surface) | Soil/Rock Description And Geologic Origin For Each Major Unit | USCS | Graphic Log | Well Diagram | PID/FID | Compressive Strength | Moisture Content | Liquid Limit | Plasticity Index | P 200 | RQD/ Comments |
|---|---|---|---|---|---|---|---|---|---|---|---|---|---|---|
| | | | | Gravel | | | | | | | | | | |
| | | | | Dark brown Silty, Sandy Clay FILL | | | | <1 | | | | | | *2-4 |
| 1 | 19/60 | | | | | | | <1 | | | | | | |
| | | | 5 | | | | | <1 | | | | | | |
| | | | | wood fragments | | | | <1 | | | | | | |
| 2 | 22/60 | | | wood fragments | | | | | | | | | | *6-8 |
| | | | | wet | | | | | | | | | | |
| | | | 10 | | | | | | | | | | | |
| 3 | 60/60 | | | Gray silty CLAY | | | | | | | | | | |
| | | | 15 | END OF BORING at 15' bgs | | | | | | | | | | |

I hereby certify that the information on this form is true and correct to the best of my knowledge.

Signature: [signature] Firm: KEY ENGINEERING

This form is authorized by Chapters 281, 283, 289, 291, 292, 293, 295, and 299, Wis. Stats. Completion of this form is mandatory. Failure to file this form may result in forfeiture of between $10 and $25,000, or imprisonment for up to one year, depending on the program and conduct involved. Personally identifiable information on this form is not intended to be used for any other purpose. NOTE: See instructions for more information, including where the completed form should be sent.

State of Wisconsin
Department of Natural Resources

# SOIL BORING LOG INFORMATION

Form 4400-122 Rev. 7-98

Route To: Watershed/Wastewater ☐ Waste Management ☐
Remediation/Revelopment ☒ Other ☐ _____

Page 1 of 2

| | | | |
|---|---|---|---|
| Facility/Project Name: 300 South Barclay | License/Permit/Monitoring Number | Boring Number: SB-18 | |
| Boring Drilled By: Name of crew chief (first, last) and Firm<br>First Name: Adam Last Name: Sweet<br>Firm: Horizon | Date Drilling Started: 12/03/2015 (mm dd yyyy) | Date Drilling Completed: 12/03/2015 (mm dd yyyy) | Drilling Method: Direct Push |
| WI Unique Well No. _ _ _ _ _ _ / DNR Well ID No. _ _ _ / Well Name | Final Static Water Level: _____ Feet MSL | Surface Elevation: _____ Feet MSL | Borehole Diameter: 2 inches |
| Local Grid Origin ☐ (estimated: ☐) or Boring Location ☐<br>State Plane _____ N, _____ E<br>SE 1/4 of NE 1/4 of Section 32, T 07 N, R 22 E | Lat ___ ° ___ ' ___ "<br>Long ___ ° ___ ' ___ " | Local Grid Location<br>_____ Feet ☐ N ☐ S _____ Feet ☐ E ☐ W | |
| Facility ID: 241029470 | County: Milwaukee | County Code: 41 | Civil Town/City/ or Village: City of Milwaukee |

| Sample Number and Type | Length Att. & Recovered (in) | Blow Counts | Depth in Feet (Below ground surface) | Soil/Rock Description And Geologic Origin For Each Major Unit | USCS | Graphic Log | Well Diagram | PID/FID | Soil Properties: Compressive Strength | Moisture Content | Liquid Limit | Plasticity Index | P 200 | RQD/ Comments |
|---|---|---|---|---|---|---|---|---|---|---|---|---|---|---|
| | | | | 4" silty sand + gravel, grey | | | | | | | | | | |
| | 20 | | | 10" sand w/ slag + gravel black / dark brown<br>6" silt w/ some sand and crushed brick, dark brown | | | | | | | | | | |
| | | | 5 | | | | | | | | | | | |
| | 20 | | | 5" silt w/ some sand, slag, and wood, dark brown / black<br>3" sand w/ some silt, dark grey, brown<br>12" silt, grey, brown mottling | | | | | | ▽ 8' | | | | |
| | | | 10 | | | | | | | | | | | |
| | 50 | | | 18" silt grey, brown mottling<br>32" silt + fine sand, grey | | | | | | | | | | |
| | | | 15 | | | | | | | | | | | |

I hereby certify that the information on this form is true and correct to the best of my knowledge.

Signature: [signature] Firm: LEY Engineering

This form is authorized by Chapters 281, 283, 289, 291, 292, 293, 295, and 299, Wis. Stats. Completion of this form is mandatory. Failure to file this form may result in forfeiture of between $10 and $25,000, or imprisonment for up to one year, depending on the program and conduct involved. Personally identifiable information on this form is not intended to be used for any other purpose. NOTE: See instructions for more information, including where the completed form should be sent.

| Sample Number and Type | Sample Length Att. & Recovered (in) | Blow Counts | Depth in Feet | Soil/Rock Description And Geologic Origin For Each Major Unit | USCS | Graphic Log | Well Diagram | PID/FID | Soil Properties: Compressive Strength | Moisture Content | Liquid Limit | Plasticity Index | P 200 | RQD/ Comments |
|---|---|---|---|---|---|---|---|---|---|---|---|---|---|---|
| | 60 | | | 32" silt + fine sand, grey<br>12" clay w/some silt, grey<br>12" peat | | | | | | | | | | |
| | | | 20 | T.O.B.C<br>20' | | | | | | | | | | |

State of Wisconsin
Department of Natural Resources

# SOIL BORING LOG INFORMATION

Form 4400-122 Rev. 7-98

Route To: Watershed/Wastewater ☐ Waste Management ☐
Remediation/Revelopment ☒ Other ☐ _____



| | | |
|---|---|---|
| Facility/Project Name: 300 South Barclay | License/Permit/Monitoring Number | Boring Number: SB-21 |
| Boring Drilled By: Name of crew chief (first, last) and Firm — First Name: Adam Last Name: Sweet — Firm: Horizon | Date Drilling Started: 12/03/2015 (mm dd yyyy) | Date Drilling Completed: 12/03/2015 (mm dd yyyy) — Drilling Method: Direct Push |
| WI Unique Well No. ___ — DNR Well ID No. ___ — Well Name | Final Static Water Level: ____ Feet MSL | Surface Elevation: ____ Feet MSL — Borehole Diameter: 2 inches |
| Local Grid Origin ☐ (estimated: ☐ ) or Boring Location ☐ — State Plane ____ N, ____ E — SE 1/4 of NE 1/4 of Section 32, T 07 N, R 22 E | Lat ___ ° ___ ' ___ " — Long ___ ° ___ ' ___ " | Local Grid Location: ____ Feet ☐ N ☐ S — ____ Feet ☐ E ☐ W |
| Facility ID: 241029470 | County: Milwaukee | County Code: 41 — Civil Town/City/ or Village: City of Milwaukee |

| Sample: Number and Type | Length Att. & Recovered (in) | Blow Counts | Depth in Feet (Below ground surface) | Soil/Rock Description And Geologic Origin For Each Major Unit | U S C S | Graphic Log | Well Diagram | PID/FID | Soil Properties: Compressive Strength | Moisture Content | Liquid Limit | Plasticity Index | P 200 | RQD/ Comments |
|---|---|---|---|---|---|---|---|---|---|---|---|---|---|---|
| | 12 | | 5 | 3" silt w/ some organic material, soft, red brown<br>3" silty sand & gravel, brown<br>6" slag w/ some silt & small gravel, brown | | | | | | | | | | |
| | 28 | | 10 | 15" silty sand & gravel, brown<br>2" crushed brick & fill material<br>4" sandy silt, soft<br>4" sand w/ some wood & silt, dark brown/black | | | | 8/3 | 8<br>10 | | | | | |
| | 0 | | 15 | no return | | | | | | | | | | |

I hereby certify that the information on this form is true and correct to the best of my knowledge.

Signature: [signature] Firm: KEY Engineering

This form is authorized by Chapters 281, 283, 289, 291, 292, 293, 295, and 299, Wis. Stats. Completion of this form is mandatory. Failure to file this form may result in forfeiture of between $10 and $25,000, or imprisonment for up to one year, depending on the program and conduct involved. Personally identifiable information on this form is not intended to be used for any other purpose. NOTE: See instructions for more information, including where the completed form should be sent.

| Sample: Number and Type | Sample: Length Att. & Recovered (in.) | Blow Counts | Depth in Feet | Soil/Rock Description And Geologic Origin For Each Major Unit | USCS | Graphic Log | Well Diagram | PID/FID | Soil Properties: Compressive Strength | Soil Properties: Moisture Content | Soil Properties: Liquid Limit | Soil Properties: Plasticity Index | Soil Properties: P 200 | RQD/ Comments |
|---|---|---|---|---|---|---|---|---|---|---|---|---|---|---|
| | 50 | | | 3" peat, soft, sticky brown, ul petroleum odor<br>33" silt, med brown, wet<br>24" silt w/ some fine sand, wet, grey | | | | | | wet | | | | |
| | | | 20 | E.O.B.@ 20' | | | | | | | | | | |

State of Wisconsin
Department of Natural Resources

# SOIL BORING LOG INFORMATION

Form 4400-122 Rev. 7-98

Route To: Watershed/Wastewater ☐ Waste Management ☐
Remediation/Revelopment ☒ Other ☐ _____

Page 1 of 1

| | | | |
|---|---|---|---|
| Facility/Project Name: 300 S. Barclay | License/Permit/Monitoring Number | Boring Number: GP-41 | |
| Boring Drilled By: Name of crew chief (first, last) and Firm<br>First Name: Dan Last Name: Fisher<br>Firm: Horizon Construction and Exploration | Date Drilling Started: 03/07/2016 (mm dd yyyy) | Date Drilling Completed: 03/07/2016 (mm dd yyyy) | Drilling Method: Direct Push |
| WI Unique Well No. _ _ _ _ _ _ / DNR Well ID No. _ _ _ _ / Well Name | Final Static Water Level: ____ Feet MSL | Surface Elevation: ____ Feet MSL | Borehole Diameter: ____ inches |
| Local Grid Origin ☐ (estimated: ☐ ) or Boring Location ☐<br>State Plane ____ N, ____ E<br>____ 1/4 of ____ 1/4 of Section ____, T ____ N, R ____ | Lat ___ ° ___ ' ___ "<br>Long ___ ° ___ ' ___ " | Local Grid Location<br>____ Feet ☐ N ☐ S ____ Feet ☐ E ☐ W | |
| Facility ID: 241029470 | County: Milwaukee | County Code: 41 | Civil Town/City/ or Village |

| Sample Number and Type | Length Att. & Recovered (in) | Blow Counts | Depth in Feet (Below ground surface) | Soil/Rock Description And Geologic Origin For Each Major Unit | USCS | Graphic Log | Well Diagram | PID/FID | Soil Properties: Compressive Strength | Moisture Content | Liquid Limit | Plasticity Index | P 200 | RQD/ Comments |
|---|---|---|---|---|---|---|---|---|---|---|---|---|---|---|
| | | | 4" | Asphalt | | | | | | | | | | |
| | 36/60 | | | Tan silty sand with some small gravel | | | | <2 | | D | | | | |
| | | | 3' | Dark brown silt with some sand and small gravel | | | | 7.3 | | D | | | | |
| | | | 4' | Brownish-yellow silty sand and large 1" gravel | | | | | | | | | | |
| 5' | | | 4'8" | Medium brown sand and some wood fill material | | | | 136 | | D | | | | |
| | | | 5'6" | Dark brown silt with some small gravel | | | | | | | | | | |
| | 40/60 | | 7' | Black silt with some sand and small gravel, strong petroleum odor | | | | 958 | | M | | | | |
| | | | | | | | | 641 | | W | | | | |
| 10' | | | | EOB @ 10' BGS | | | | | | | | | | |

I hereby certify that the information on this form is true and correct to the best of my knowledge.

Signature: [signature] Firm: Key Engineering Group

This form is authorized by Chapters 281, 283, 289, 291, 292, 293, 295, and 299, Wis. Stats. Completion of this form is mandatory. Failure to file this form may result in forfeiture of between $10 and $25,000, or imprisonment for up to one year, depending on the program and conduct involved. Personally identifiable information on this form is not intended to be used for any other purpose. NOTE: See instructions for more information, including where the completed form should be sent.

State of Wisconsin
Department of Natural Resources

**SOIL BORING LOG INFORMATION**
Form 4400-122 Rev. 7-98

Route To: Watershed/Wastewater ☐ Waste Management ☐
Remediation/Revelopment ☑ Other ☐ _____

Page 1 of 2

| | | | |
|---|---|---|---|
| Facility/Project Name: WAYNE PIGMENT CORP. | License/Permit/Monitoring Number | Boring Number: MW-1 | |
| Boring Drilled By: Name of crew chief (first, last) and Firm — First Name: TONY Last Name: KAPUGI — Firm: ON-SITE ENVIRONMENTAL, INC. | Date Drilling Started: 10/09/2006 (mm dd yyyy) | Date Drilling Completed: 10/10/2006 (mm dd yyyy) | Drilling Method: DIRECT-PUSH |
| WI Unique Well No. _ _ _ _ _ _ / DNR Well ID No. _ _ _ / Well Name | Final Static Water Level: _____ Feet MSL | Surface Elevation: _____ Feet MSL | Borehole Diameter: 2 inches |
| Local Grid Origin ☐ (estimated: ☐) or Boring Location ☐ — State Plane _____ N, _____ E — NE 1/4 of NE 1/4 of Section 32, T 7 N, R 22 E | Lat ___ ° ___ ' ___ " Long ___ ° ___ ' ___ " | Local Grid Location: _____ Feet ☐ N ☐ S _____ Feet ☐ E ☐ W | |
| Facility ID: N/A | County: MILWAUKEE | County Code: 41 | Civil Town/City/ or Village: MILWAUKEE |

| Sample Number and Type | Length Att. & Recovered (in) | Blow Counts | Depth in Feet (Below ground surface) | Soil/Rock Description And Geologic Origin For Each Major Unit | U S C S | Graphic Log | Well Diagram | PID/FID | Soil Properties: Compressive Strength | Moisture Content | Liquid Limit | Plasticity Index | P 200 | RQD/ Comments |
|---|---|---|---|---|---|---|---|---|---|---|---|---|---|---|
| | | | | 6" asphalt | | | | | | | | | | |
| | | | 2' | No recovery | | | | | | | | | | |
| | | | | light brown silty clay w/ med. grain pebbles + cobble & rock frgmts | CL | | | 0.0 | | | | | | |
| | | | 4 | | | | | | | | | | | |
| | | | | SAA | | | | | | | | | | |
| | | | 6 | No recovery | N/A | | | N/A | | | | | | |
| | | | | ▽ Silty clay w/ med. grain pebbles rock & shell frgmts. + cobble, fill | SW | | | " | | | | | | |
| | | | 8 | | | | | | | | | | | |
| | | | | gray silty clay w/ wood frgmts. | CL | | | " | | | | | | |
| | | | 10 | | | | | | | | | | | |
| | | | | Blind | N/A | | | " | | | | | | |

I hereby certify that the information on this form is true and correct to the best of my knowledge.

Signature: [signature] Firm: DRAKE ENVIRONMENTAL, INC.

This form is authorized by Chapters 281, 283, 289, 291, 292, 293, 295, and 299, Wis. Stats. Completion of this form is mandatory. Failure to file this form may result in forfeiture of between $10 and $25,000, or imprisonment for up to one year, depending on the program and conduct involved. Personally identifiable information on this form is not intended to be used for any other purpose. NOTE: See instructions for more information, including where the completed form should be sent.

| Sample | | | | | | | | | Soil Properties | | | | | |
|---|---|---|---|---|---|---|---|---|---|---|---|---|---|---|
| Number and Type | Length Att. & Recovered (in) | Blow Counts | Depth in Feet | Soil/Rock Description And Geologic Origin For Each Major Unit | U S C S | Graphic Log | Well Diagram | PID/FID | Compressive Strength | Moisture Content | Liquid Limit | Plasticity Index | P 200 | RQD/ Comments |
| | | | | Blnd | N/A | | | N/A | | | | | | |
| | | | 12 | | | | | | | | | | | |
| | | | | Blnd | " | | | " | | | | | | |
| | | | | EOB @ 13' | | | | | | | | | | |
| | | | 14 | | | | | | | | | | | |
| | | | 16 | | | | | | | | | | | |

State of Wisconsin
Department of Natural Resources

**SOIL BORING LOG INFORMATION**
Form 4400-122 Rev. 7-98

Route To: Watershed/Wastewater ☐ Waste Management ☐
Remediation/Revelopment ☑ Other ☐ _____

Page 1 of 2

| Facility/Project Name | License/Permit/Monitoring Number | Boring Number |
|---|---|---|
| WAYNE PIGMENT CORP. | | MW-6 |

| Boring Drilled By: Name of crew chief (first, last) and Firm | Date Drilling Started | Date Drilling Completed | Drilling Method |
|---|---|---|---|
| First Name: TONY Last Name: KAPUGI<br>Firm: ON-SITE ENVIRONMENTAL, INC. | 10/09/2006 (mm dd yyyy) | 10/09/2006 (mm dd yyyy) | DIRECT-PUSH |

| WI Unique Well No. | DNR Well ID No. | Well Name | Final Static Water Level | Surface Elevation | Borehole Diameter |
|---|---|---|---|---|---|
| _ _ _ _ _ _ | _ _ _ _ | | _____ Feet MSL | _____ Feet MSL | 2 inches |

Local Grid Origin ☐ (estimated: ☐ ) or Boring Location ☐
State Plane _____ N, _____ E
NE 1/4 of NE 1/4 of Section 32, T 7 N, R 22 E

Lat ___ ° ___ ' ___ "
Long ___ ° ___ ' ___ "

Local Grid Location
☐ N _____ Feet ☐ S ☐ E _____ Feet ☐ W

| Facility ID | County | County Code | Civil Town/City/or Village |
|---|---|---|---|
| N/A | MILWAUKEE | 41 | MILWAUKEE |

| Sample: Number and Type | Length Att. & Recovered (in) | Blow Counts | Depth in Feet (Below ground surface) | Soil/Rock Description And Geologic Origin For Each Major Unit | USCS | Graphic Log | Well Diagram | PID/FID | Soil Properties: Compressive Strength | Moisture Content | Liquid Limit | Plasticity Index | P 200 | RQD/ Comments |
|---|---|---|---|---|---|---|---|---|---|---|---|---|---|---|
| | | | | 6" asphalt | | | | | | | | | | |
| | | | | no recovery | N/A | | | N/A | | | | | | |
| | | | 2' | | | | | | | | | | | |
| | | | | sandy gravelly mix w/ some fines "probable fill" w/wood fragments | SW | | | 0.0 | | | | | | |
| | | | 4 | | | | | | | | | | | |
| | | | | SAA | | | | | | | | | | |
| | | | | no recovery | | | | | | | | | | |
| | | | 6 | | | | | | | | | | | |
| | | | | silty sand w/ med. grain pebbles wet - some petroleum odor | SP | | | 1,320 | | | | | | |
| | | | 8 ▽ | | | | | | | | | | | |
| | | | | SAA | | | | | | | | | | |
| | | | 10 | | | | | | | | | | | |
| | | | | no recovery | | | | | | | | | | |

I hereby certify that the information on this form is true and correct to the best of my knowledge.

Signature _____ Firm DRAKE ENVIRONMENTAL, INC.

This form is authorized by Chapters 281, 283, 289, 291, 292, 293, 295, and 299, Wis. Stats. Completion of this form is mandatory. Failure to file this form may result in forfeiture of between $10 and $25,000, or imprisonment for up to one year, depending on the program and conduct involved. Personally identifiable information on this form is not intended to be used for any other purpose. NOTE: See instructions for more information, including where the completed form should be sent.

| Sample | | | | | | | | | Soil Properties | | | | | |
|---|---|---|---|---|---|---|---|---|---|---|---|---|---|---|
| Number and Type | Length Att. & Recovered (in) | Blow Counts | Depth in Feet | Soil/Rock Description And Geologic Origin For Each Major Unit | U S C S | Graphic Log | Well Diagram | PID/FID | Compressive Strength | Moisture Content | Liquid Limit | Plasticity Index | P 200 | RQD/ Comments |
| | | | | no recovery | | | | | | | | | | |
| | | | 12 | Silty sandy clay w/ petroleum odor | CL | | | N/A | | | | | | |
| | | | 14 | SAA | CL | | | N/A | | | | | | |
| | | | | EOB @ 15' | | | | | | | | | | |
| | | | 16 | | | | | | | | | | | |

State of Wisconsin
Department of Natural Resources

# SOIL BORING LOG INFORMATION

Form 4400-122 Rev. 7-98

Route To: Watershed/Wastewater ☐ Waste Management ☐
Remediation/Revelopment ☑ Other ☐ _____

Page 1 of 2

| Facility/Project Name | License/Permit/Monitoring Number | Boring Number |
|---|---|---|
| WAYNE PIGMENT CORP. | | MW-9 |

| Boring Drilled By: Name of crew chief (first, last) and Firm | Date Drilling Started | Date Drilling Completed | Drilling Method |
|---|---|---|---|
| First Name: TONY Last Name: CAPUGI<br>Firm: ON-SITE ENVIRONMENTAL, INC. | 10/09/2006 (mm dd yyyy) | 10/09/2006 (mm dd yyyy) | DIRECT-PUSH |

| WI Unique Well No. | DNR Well ID No. | Well Name | Final Static Water Level | Surface Elevation | Borehole Diameter |
|---|---|---|---|---|---|
| _ _ _ _ _ _ | _ _ _ _ | | _____ Feet MSL | _____ Feet MSL | 2 inches |

Local Grid Origin ☐ (estimated: ☐ ) or Boring Location ☐
State Plane _____ N, _____ E
NE 1/4 of NE 1/4 of Section 32, T 7 N, R 22 E

Lat ___ ° ___ ' ___ "
Long ___ ° ___ ' ___ "

Local Grid Location
... _____ Feet ☐ N ☐ S _____ Feet ☐ E ☐ W

| Facility ID | County | County Code | Civil Town/City/ or Village |
|---|---|---|---|
| N/A | MILWAUKEE | 41 | MILWAUKEE |

| Sample: Number and Type | Length Att. & Recovered (in) | Blow Counts | Depth in Feet (Below ground surface) | Soil/Rock Description And Geologic Origin For Each Major Unit | USCS | Graphic Log | Well Diagram | PID/FID | Soil Properties: Compressive Strength | Moisture Content | Liquid Limit | Plasticity Index | P 200 | RQD/ Comments |
|---|---|---|---|---|---|---|---|---|---|---|---|---|---|---|
| | | | | 6" gravel | | | | | | | | | | |
| | | | | no recovery | N/A | | | N/A | | | | | | |
| | | | 2' | black sandy gravelly 'fill' w/ rock frgmts. | SW | | | 0.3 | | | | | | |
| | | | 4 | SAA | " | | | N/A | | | | | | |
| | | | | no recovery | N/A | | | " | | | | | | |
| | | | 6 | black sandy gravelly mix | SW | | | 0.0 | | | | | | |
| | | | | no recovery ▽ | | | | | | | | | | |
| | | | 8 | black sandy gravelly 'fill' w/ wood & cobblestone frgmts. | SW | | | N/A | | | | | | |
| | | | 10 | light brwn. clay | CL | | | " | | | | | | |
| | | | | Blind | | | | | | | | | | |

I hereby certify that the information on this form is true and correct to the best of my knowledge.

Signature _____ Firm DRAKE ENVIRONMENTAL, INC.

This form is authorized by Chapters 281, 283, 289, 291, 292, 293, 295, and 299, Wis. Stats. Completion of this form is mandatory. Failure to file this form may result in forfeiture of between $10 and $25,000, or imprisonment for up to one year, depending on the program and conduct involved. Personally identifiable information on this form is not intended to be used for any other purpose. NOTE: See instructions for more information, including where the completed form should be sent.

| Sample | | | | | | | | | Soil Properties | | | | | |
|---|---|---|---|---|---|---|---|---|---|---|---|---|---|---|
| Number and Type | Length Att. & Recovered (in) | Blow Counts | Depth in Feet | Soil/Rock Description And Geologic Origin For Each Major Unit | U S C S | Graphic Log | Well Diagram | PID/FID | Compressive Strength | Moisture Content | Liquid Limit | Plasticity Index | P 200 | RQD/ Comments |
| | | | | Blind | N/A | | | N/A | | | | | | |
| | | | 12 | | | | | | | | | | | |
| | | | | Blind | " | | | " | | | | | | |
| | | | 14 | | | | | | | | | | | |
| | | | | EOB: @ 14' | | | | | | | | | | |
| | | | 16 | | | | | | | | | | | |

State of Wisconsin
Department of Natural Resources

**SOIL BORING LOG INFORMATION**
Form 4400-122 Rev. 7-98

Route To: Watershed/Wastewater ☐ Waste Management ☐
Remediation/Revelopment ☑ Other ☐ _____

Page 1 of 2

| Facility/Project Name | License/Permit/Monitoring Number | Boring Number |
|---|---|---|
| WAYNE PIGMENT CORP. | | MW-10 |

| Boring Drilled By: Name of crew chief (first, last) and Firm | Date Drilling Started | Date Drilling Completed | Drilling Method |
|---|---|---|---|
| First Name: TONY Last Name: CAPUGI Firm: ON-SITE ENVIRONMENTAL, INC. | 10/09/2006 (mm dd yyyy) | 10/10/2006 (mm dd yyyy) | DIRECT-PUSH |

| WI Unique Well No. | DNR Well ID No. | Well Name | Final Static Water Level | Surface Elevation | Borehole Diameter |
|---|---|---|---|---|---|
| _ _ _ _ _ _ | _ _ _ _ | | _____ Feet MSL | _____ Feet MSL | 2 inches |

Local Grid Origin ☐ (estimated: ☐ ) or Boring Location ☐
State Plane _____ N, _____ E
NE 1/4 of NE 1/4 of Section 32, T 7 N, R 22 E

Lat ___ ° ___ ' ___ "
Long ___ ° ___ ' ___ "

Local Grid Location
☐ N ☐ E
Feet ☐ S _____ Feet ☐ W

| Facility ID | County | County Code | Civil Town/City/ or Village |
|---|---|---|---|
| N/A | MILWAUKEE | 41 | MILWAUKEE |

| Sample Number and Type | Length Att. & Recovered (in) | Blow Counts | Depth in Feet (Below ground surface) | Soil/Rock Description And Geologic Origin For Each Major Unit | USCS | Graphic Log | Well Diagram | PID/FID | Compressive Strength | Moisture Content | Liquid Limit | Plasticity Index | P 200 | RQD/ Comments |
|---|---|---|---|---|---|---|---|---|---|---|---|---|---|---|
| | | | | 6" asphalt | | | | | | | | | | |
| | | | | no recovery | N/A | | | N/A | | | | | | |
| | | | 2' | Sandy gravelly 'fill' w/ rock frgmnts. | SW | | | 0.0 | | | | | | |
| | | | 4 | black sandy gravelly 'fill' w/ metal & wood frgmnts. | " | | | N/A | | | | | | |
| | | | | No recovery | | | | " | | | | | | |
| | | | 6 | " | " | | | " | | | | | | |
| | | | | ▽ Sandy gravelly 'fill' w/ paint odor | SW | | | 606 | | | | | | |
| | | | 8 | brown silty clay w/ fine sand - paint odor | CL | | | N/A | | | | | | |
| | | | | No recovery | N/A | | | " | | | | | | |
| | | | 10 | Blind | | | | | | | | | | |

I hereby certify that the information on this form is true and correct to the best of my knowledge.

Signature _____ Firm DRAKE ENVIRONMENTAL, INC.

This form is authorized by Chapters 281, 283, 289, 291, 292, 293, 295, and 299, Wis. Stats. Completion of this form is mandatory. Failure to file this form may result in forfeiture of between $10 and $25,000, or imprisonment for up to one year, depending on the program and conduct involved. Personally identifiable information on this form is not intended to be used for any other purpose. NOTE: See instructions for more information, including where the completed form should be sent.

| Sample | | Blow Counts | Depth in Feet | Soil/Rock Description And Geologic Origin For Each Major Unit | U S C S | Graphic Log | Well Diagram | PID/FID | Soil Properties | | | | | RQD/ Comments |
|---|---|---|---|---|---|---|---|---|---|---|---|---|---|---|
| Number and Type | Length Att. & Recovered (in) | | | | | | | | Compressive Strength | Moisture Content | Liquid Limit | Plasticity Index | P 200 | |
| | | | | Blind | N/A | | | N/A | | | | | | |
| | | | 12 | | | | | | | | | | | |
| | | | | Blind | " | | | " | | | | | | |
| | | | 14 | | | | | | | | | | | |
| | | | | EOB @ 14' | | | | | | | | | | |
| | | | 16 | | | | | | | | | | | |

DRAKE CONSULTING GROUP, LLC

| PROJECT NAME | PROJ MGR | BORING NUMBER |
|---|---|---|
| 214 EAST FLORIDA STREET, LLC | CMC | MW-14 |

| BORING DRILLED BY | CREW CHEIF |
|---|---|
| FIRM: MORAINE ENVIRONMENTAL, INC. | FIRST NAME: ADAM LAST NAME: SWEET |

| DATE DRILLING STARTED | DATE DRILLING COMPLETED | LOCATION DESCRIPTION |
|---|---|---|
| 10/28/10 | 10/28/10 | NE ¼ NE ¼ SEC 32 T7N R22E |

| DRILLING METHOD | BOREHOLE DIAMETER |
|---|---|
| HYDRO-VAC (0-5') DIRECT PUSH (5-EOB) | 2 INCHES |

| FACILITY ID | COUNTY | COUNTY CODE | TOWN/CITY/OR VILLAGE |
|---|---|---|---|
| | MILWAUKEE | 41 | CITY OF MILWAUKEE |

| DEPTH | SAMPLE | TYPE | N | QP | DEPTH (bgs) | DESCRIPTION | USCS | PID |
|---|---|---|---|---|---|---|---|---|
| 0–1 | LAB SAMPLE | | | | | 0-6" ASPHALT<br>SANDY/GRAVELLY MIX W/BRICK FRAGMENTS ("FILL") | GM | 216 |
| 2–3 | | | | | | SANDY/GRAVELLY MIX W/BRICK FRAGMENTS ("FILL") | GM | NA |
| 4–5 | | | | | | GRAY SILT AND TRACE GRAVEL W/BRICK FRAGMENTS (WET) | ML | 89 |
| 6–7 | LAB SAMPLE | | | | | GRAY SILT AND TRACE GRAVEL W/BRICK FRAGMENTS (WET) | ML | >256 |
| 8–9 | | | | | | SANDY SILT W/WOOD FRAGMENTS ("ODOR") | ML | 42 |
| 10–11 | | | | | | BLACK GRAVELLY SAND W/WOOD FRAGMENTS | SW | 14 |
| 12–13 | | | | | | BLACK GRAVELLY SAND W/WOOD FRAGMENTS | SW | 23 |
| 14–15 | | | | | | BROWN SANDY SILT W/WOOD FRAGMENTS | SW/ML | |
| 16–17 | | | | | | SAND W/SHELL FRAGMENTS | SW | 13.7 |
| 18–19 | | | | | | EOB @ 18 FEET | | |
| 20–21 | | | | | | | | |

NOTES: HYDRO-VAC UNIT EMPLOYED AT 0-5' BGS. FIELD SCREEN SAMPLES AND LABORATORY SAMPLES COLLECTED FROM ANNULAR SPACE AT 0-2 FEET BGS.

MW-14 CONVERTED TO NR 141 MONITORING WELL (SCREENED 3-18 FEET)

NA – NOT ANALYZED

State of Wisconsin
Department of Natural Resources

# SOIL BORING LOG INFORMATION

Form 4400-122 Rev. 7-98

Route To: Watershed/Wastewater ☐ Waste Management ☐ Remediation/Revelopment ☐ Other ☐ _____

Page 1 of 2

| | | |
|---|---|---|
| Facility/Project Name: 300 South Barclay | License/Permit/Monitoring Number | Boring Number: MW-14R |
| Boring Drilled By: Name of crew chief (first, last) and firm — First Name: Adam Last Name: Sweet — Firm: Horizon | Date Drilling Started: 12/04/2015 (mm dd yyyy) | Date Drilling Completed: 12/04/2015 (mm dd yyyy) — Drilling Method: HSA |
| WI Unique Well No.: _ _ _ _ _ _ — DNR Well ID No.: _ _ _ — Well Name: | Final Static Water Level: _____ Feet MSL | Surface Elevation: _____ Feet MSL — Borehole Diameter: _____ inches |
| Local Grid Origin ☐ (estimated: ☐ ) or Boring Location ☐ — State Plane _____ N, _____ E — SE 1/4 of NE 1/4 of Section 32, T 07 N, R 22 E | Lat ___ ° ___ ' ___ " — Long ___ ° ___ ' ___ " | Local Grid Location: _____ Feet ☐ N ☐ S _____ Feet ☐ E ☐ W |
| Facility ID: 241029470 | County: Milwaukee | County Code: 41 — Civil Town/City/ or Village: City of Milwaukee |

| Sample: Number and Type | Length Att. & Recovered (in) | Blow Counts | Depth in Feet (Below ground surface) | Soil/Rock Description And Geologic Origin For Each Major Unit | USCS | Graphic Log | Well Diagram | PID/FID | Soil Properties: Compressive Strength | Moisture Content | Liquid Limit | Plasticity Index | P 200 | RQD/ Comments |
|---|---|---|---|---|---|---|---|---|---|---|---|---|---|---|
| | 48/60 | | 5' | Blind Drilled to EOB | | | | | | | ~5' | | | |
| | 50/60 | | 10' | | | | | | | | | | | |
| | 52/60 | | 15' | | | | | | | | | | | |

I hereby certify that the information on this form is true and correct to the best of my knowledge.

Signature: [signature] Firm: KEY Engineering

This form is authorized by Chapters 281, 283, 289, 291, 292, 293, 295, and 299, Wis. Stats. Completion of this form is mandatory. Failure to file this form may result in forfeiture of between $10 and $25,000, or imprisonment for up to one year, depending on the program and conduct involved. Personally identifiable information on this form is not intended to be used for any other purpose. NOTE: See instructions for more information, including where the completed form should be sent.

| Sample | | | | | | | | | Soil Properties | | | | | |
|---|---|---|---|---|---|---|---|---|---|---|---|---|---|---|
| Number and Type | Length Att. & Recovered (in) | Blow Counts | Depth in Feet | Soil/Rock Description And Geologic Origin For Each Major Unit | U S C S | Graphic Log | Well Diagram | PID/FID | Compressive Strength | Moisture Content | Liquid Limit | Plasticity Index | P 200 | RQD/ Comments |
| | 60/60 | 20' | | Blind Drilled to EOB | | | | | | | | | | |
| | | | | EOB @ 20' BGS | | | | | | | | | | |

DRAKE CONSULTING GROUP, LLC

| PROJECT NAME | PROJ MGR | BORING NUMBER |
|---|---|---|
| 214 EAST FLORIDA STREET, LLC | CMC | MW-15 |

BORING DRILLED BY FIRM: MORAINE ENVIRONMENTAL, INC.
CREW CHEIF FIRST NAME: ADAM LAST NAME: SWEET

| DATE DRILLING STARTED | DATE DRILLING COMPLETED | LOCATION DESCRIPTION |
|---|---|---|
| 10/28/10 | 10/28/10 | NE ¼ NE ¼ SEC 32 T7N R22E |

| DRILLING METHOD | BOREHOLE DIAMETER |
|---|---|
| HYDRO-VAC (0-5') DIRECT PUSH (5-EOB) | 2 INCHES |

| FACILITY ID | COUNTY | COUNTY CODE | TOWN/CITY/OR VILLAGE |
|---|---|---|---|
| | MILWAUKEE | 41 | CITY OF MILWAUKEE |

| DEPTH | SAMPLE | TYPE | N | QP | DEPTH (bgs) | DESCRIPTION | USCS | PID |
|---|---|---|---|---|---|---|---|---|
| 0–1 | | | | | | 0-6" ASPHALT<br>NO SAMPLE RECOVERY | NA | <1 |
| 2–3 | | | | | | SANDY/GRAVELLY MIX W/BRICK FRAGMENTS ("FILL") | GM | NA |
| 4–5 | | | | | | SANDY/GRAVELLY MIX W/WOOD FRAGMENTS ("FILL")<br>NO SAMPLE RECOVERY | GM | 3.7 |
| 6–7 | LAB SAMPLE | | | | | BROWN SANDY SILT W/TRACE CLAY & SOME SHELL FRAGMENTS ("MOIST") | GM | 5.3 |
| 8–9 | | | | | | BLACK SANDY SILT W/TRACE SHELL FRAGMENTS (WET) | ML | 5.3 |
| 10–11 | | | | | | MEDIUM GRAIN SAND W/SHELL FRAGMENTS | SW | NA |
| 12–13 | | | | | | MEDIUM GRAIN SAND W/SHELL FRAGMENTS | SW | 6.5 |
| 14–15 | | | | | | CLAYEY SILT W/SHELL FRAGMENTS<br>CLAYEY SILTY SAND W/WOOD FRAGMENTS (WET) | CL/ML | |
| 16–17 | | | | | | SANDY SILT W/TRACE CLAY & W/WOOD & SHELL FRAGMENTS ("FILL") | SW/ML | 1.7 |
| 18–19 | | | | | | EOB @ 18 FEET | | |
| 20–21 | | | | | | | | |

NOTES: HYDRO-VAC UNIT EMPLOYED AT 0-5' BGS. FIELD SCREEN SAMPLES AND LABORATORY SAMPLES COLLECTED FROM ANNULAR SPACE AT 0-2 FEET BGS.

MW-15 CONVERTED TO NR 141 MONITORING WELL (SCREENED 3-18 FEET)

NA – NOT ANALYZED

DRAKE CONSULTING GROUP, LLC

| PROJECT NAME | PROJ MGR | BORING NUMBER |
|---|---|---|
| 214 EAST FLORIDA STREET, LLC | CMC | MW-16 |

| BORING DRILLED BY | CREW CHEIF |
|---|---|
| FIRM: MORAINE ENVIRONMENTAL, INC. | FIRST NAME: ADAM LAST NAME: SWEET |

| DATE DRILLING STARTED | DATE DRILLING COMPLETED | LOCATION DESCRIPTION |
|---|---|---|
| 10/28/10 | 10/28/10 | NE ¼ NE ¼ SEC 32 T7N R22E |

| DRILLING METHOD | BOREHOLE DIAMETER |
|---|---|
| HYDRO-VAC (0-5') DIRECT PUSH (5-EOB) | 2 INCHES |

| FACILITY ID | COUNTY | COUNTY CODE | TOWN/CITY/OR VILLAGE |
|---|---|---|---|
| | MILWAUKEE | 41 | CITY OF MILWAUKEE |

| DEPTH | SAMPLE | TYPE | N | QP | DEPTH (bgs) | DESCRIPTION | USCS | PID |
|---|---|---|---|---|---|---|---|---|
| 0–1 | | | | | | 0-6" ASPHALT<br>NO SAMPLE RECOVERY | NA | NA |
| 2–3 | | | | | | SANDY/GRAVELLY MIX W/BRICK FRAGMENTS ("FILL") | GM | NA |
| 4–6 | | | | | | SANDY/GRAVELLY MIX W/WOOD FRAGMENTS ("FILL")<br>NO SAMPLE RECOVERY | GM | 1.7 |
| 7–8 | LAB SAMPLE | | | | | BROWN SANDY SILT W/TRACE CLAY & SOME SHELL FRAGMENTS ("MOIST") | GM | 5.3 |
| 9–10 | | | | | | BLACK SANDY SILT W/TRACE SHELL FRAGMENTS | ML | <1 |
| 11–12 | | | | | | MEDIUM GRAIN SAND W/SHELL FRAGMENTS (WET) | SW | NA |
| 13–14 | | | | | | MEDIUM GRAIN SAND W/SHELL FRAGMENTS | SW | NA |
| 15–16 | | | | | | MEDIUM GRAIN SANDY SILT W/SHELL FRAGMENTS<br>MEDIUM GRAIN SANDY SILT W/SHELL FRAGMENTS | SW/ML | NA |
| 17–18 | | | | | | SAA<br>SANDY SILT W/WOOD & SHELL FRAGMENTS ("FILL") | SW/ML | NA |
| 19–20 | | | | | | EOB @ 18 FEET | | |
| 21 | | | | | | | | |

NOTES: HYDRO-VAC UNIT EMPLOYED AT 0-5' BGS. FIELD SCREEN SAMPLES AND LABORATORY SAMPLES COLLECTED FROM ANNULAR SPACE AT 0-2 FEET BGS.

MW-16 CONVERTED TO NR 141 MONITORING WELL (SCREENED 3-18 FEET)

NA – NOT ANALYZED

7\C\AutoCAD LT 2000\Drake Drawings\Drake Boring Log Form.dwg

# Appendix 4

Key Engineering Group, Ltd.

# *GEOTECHNICAL ENGINEERING REPORT*

***Proposed Building Additions-***
***Barclay Development***
***300 S. Barclay Street and 139 E. Oregon Street***
***Milwaukee, Wisconsin***

***GESTRA Project No.: 17030-10***
***March 13, 2017***

***Prepared For:***
***Key Engineering, Inc.***
***735 N. Water Street, Suite 510***
***Milwaukee, WI 53202***

# Geotechnical Engineering Report

**Proposed Building Additions-Barclay Development**
**300 S. Barclay Street and 139 E. Oregon Street**
**Milwaukee, Wisconsin**

**GESTRA Project No.: 17030-10**
**March 13, 2017**

**Prepared for:**

**Key Engineering Group, Ltd.**
**735 N. Water Street, Suite 510**
**Milwaukee, WI 53202**

**Report Prepared by:**

**GESTRA Engineering, Inc.**
**191 W. Edgerton Avenue**
**Milwaukee, WI 53207**
**(414) 933-7444**

## TABLE OF CONTENTS

**1.0 INTRODUCTION ..... 3**

1.1 Project Information ..... 3

**2.0 SCOPE OF WORK ..... 3**

**3.0 EXPLORATION RESULTS ..... 4**

3.1 Site and Existing Building Conditions ..... 4

3.2 Subsurface Soil Profile ..... 4

3.3 Groundwater Observations ..... 5

**4.0 ANALYSIS AND RECOMMENDATIONS ..... 5**

4.1 Helical Pier Foundation Recommendations ..... 5

4.2 Methane Mitigation Recommendations ..... 6

**5.0 EXPLORATION AND TESTING PROCEDURES ..... 6**

5.1 Layout and Elevation Procedures ..... 6

5.2 Field Testing Procedures ..... 6

5.3 Laboratory Testing Procedures ..... 6

**STANDARD OF CARE ..... 7**

**APPENDIX I** BOREHOLE LOCATION MAP, TEST BORING LOGS, NOMENCLATURE, AND MIDWEST DRILLED FOUNDATIONS & ENGINEERING, INC. LETTER DATED MARCH 7, 2017

**APPENDIX II** LABORATORY TEST RESULTS

© GESTRA Engineering, Inc. 2017

**Geotechnical Engineering Report**

**Proposed Building Additions-Barclay Development**
**300 S. Barclay Street and 139 E. Oregon Street**
**Milwaukee, Wisconsin**

**GESTRA Project No.: 17030-10**
**March 13, 2017**

## 1.0 INTRODUCTION

GESTRA Engineering, Inc. (GESTRA) was authorized by Key Engineering Group, Ltd. (Key) to complete a subsurface exploration and geotechnical investigation for the Proposed Building Additions located at 300 S. Barclay Street and 139 E. Oregon Street in Milwaukee, Wisconsin. This report presents the results from the subsurface soil exploration, laboratory test results, our review of the planned Helical Foundation design, and recommendations for vapor mitigation.

The engineering recommendations and analysis contained within this report are based on the following project information which is a projection of GESTRA's understanding of the project. If for any reason the actual project information differs from what is reported below, GESTRA should be contacted so that we can review our recommendations in light of any new information.

### 1.1 Project Information

The project will consist of a three story, slab on grade building addition between two existing buildings (Building 33 and Building 34) located at 139 E. Oregon Street and a two story, slab on grade building addition south of the existing building (Building 11) located at 300 S. Barclay Street.

Based on a phone discussion with Greenfire Management Services, LLC (Greenfire, Construction Manager) and Midwest Drilled Foundation & Engineering, Inc. (Midwest, Foundation Design Build Contractor), it is our understanding the planned building additions will be supported on a helical pier foundation system. The current helical pier design by Midwest is planned as three flights (8 inch, 10 inch and 12 inch), installed to an approximate depth between 85 feet to 90 feet, with an allowable capacity of 25 kips. Midwest based the length and design from the soil borings provided by GESTRA and drilled on February 6 and 7, 2017.

## 2.0 SCOPE OF WORK

GESTRA has performed the following services for the project:

- Completed two (2) standard penetration test (SPT) soil borings to depths of 101 feet to 121 feet below the ground surface. The borings were sampled at 2½ foot intervals to 16 feet and then at 5 foot intervals to the termination depth. Our site work included abandonment of the boreholes with cement grout per WDNR requirements.
- Spoils produced from the boreholes were containerized in 55 gallon drums and transported to a designated location on-site selected by Key.

- Performed laboratory soil tests to assign classification and engineering properties to the soils encountered. These tests included hand penetrometer, moisture and organic content, Atterberg limits, dry density, and unconfined compressive strength.
- Prepared this geotechnical engineering report presenting the results of the subsurface soil exploration, laboratory tests, our review and comments pertaining to the current Helical Pier foundation design, and discussion for methane mitigation.

## 3.0 EXPLORATION RESULTS

### 3.1 Site and Existing Building Conditions

The existing project site consists of three buildings located on two separate properties, two at 139 E. Oregon Street and one at 300 S. Barclay Street. The addition between the existing buildings at 139 E. Oregon Street will be located east of the existing catwalk connecting the two buildings. The addition to the building at 300 S. Barclay Street will be south of the existing building in the area of the existing outdoor receiving dock for the former business.

### 3.2 Subsurface Soil Profile

Both of the borings were drilled on the existing pavement that surrounds the buildings. The pavement at boring GT-1 (139 E. Oregon St.) consisted of 6 inches of asphalt overlying 6 inches of concrete and 8 inches of base course material. GT-2 (300 S. Barclay St.) consisted of 6 inches of concrete with no discernable base course.

*Fill:* Below the pavement structure at each location, fill material was encountered. The fill material varied in depth from 13 feet to 17 feet and consisted of a mixed of silt, sand and clay layers, with foundry material in the upper 6 feet to 8 feet. Fuel odors were present in the samples collected from boring GT-1. The moisture contents of cohesive fill soils tested ranged from 11% to 16%.

*Native Soils:* Native soils were encountered below the fill material in both of the borings. The native soils consisted of a layer of peat/ elastic silt with peat layers overlying very loose to loose sand. At an approximate depth of 28 feet to 33 feet the very loose to loose sand transitioned to soft elastic silt which extend to a depth of 73 feet. At 73 feet, the soils transitioned to medium dense to dense sand/ silt to 93 feet. However, a five foot layer of very loose silt was encountered in boring GT-2 from 78 feet to 83 feet. At 93 feet, a 10 foot thick clay layer was observed in both of the borehole and in boring GT-1 the soils transitioned back to medium dense silty sand/ sandy/ silt at 103 feet.

Results of the field and laboratory tests and observations are depicted on the individual test boring logs included in Appendix I of this report. Soils were grouped together based on similar observed properties. The stratification lines were estimated by the reviewing engineer based on the available data and experience. The actual in-situ changes between layers may differ slightly and may be more gradual than depicted on the boring logs. Subsurface and groundwater conditions can vary between borehole locations and in areas not explored.

It is important to note that the soil observations and soil layer thickness estimates were made in small diameter boreholes. Therefore, it should be understood that thicker or thinner deposits of the individual strata are likely to be encountered within other portions of the project. Furthermore, the estimation of strata thickness, such as base course or fill, at a particular location can differ from person to person due to a sometimes indistinct transition between the soils

encountered. Additionally, it must be recognized that, in the absence of foreign substances and/or debris within the soil samples obtained, it is sometimes difficult to distinguish between natural soils and clean soil fill.

### 3.3 Groundwater Observations

Groundwater observations were made during drilling operations prior to the driller converting to mud rotary drilling. Groundwater measurements could not be made after the driller converted to mud rotary due to the introduction of drilling fluid into the borehole. Water was observed in only GT-1 at a depth of 8 feet within a sand fill layer overlying a clayey fill soils.

Groundwater level fluctuations may occur with time and seasonal changes due to variations in precipitation, evaporation, surface water runoff and local dewatering. Perched water pockets at higher elevations may also be encountered during wet weather periods, particularly in more permeable silt and sand seams or granular fill material overlying less permeable clays. Installation and monitoring of an observation well would be required to assess true groundwater elevation.

## 4.0 ANALYSIS AND RECOMMENDATIONS

### 4.1 Helical Pier Foundation Recommendations

Based on conversations with Greenfire and Midwest, it is our understanding the current foundation design will consist of helical piers. Midwest is responsible for the helical pier design and the current helical pier design will consist of three flights, (8 inch, 10 inch and 12 inch) with an allowable capacity of 25 kips. It is our understanding Midwest estimates the piers will need to be installed to an approximate depth between 85 feet to 90 feet based on the soil borings provided by GESTRA.

As part of our scope of services, GESTRA performed an independent review of the pier length and capacity provided. Based on our analysis of the current design, the planned helical pier design should be suitable to support the proposed building additions provided the design follows the applicable design standards and pier manufacturers standards. Our analysis assumed that a factor of safety of 3 was applied to the ultimate bearing capacity.

Regardless of estimated depth, we assume that the helical piers will extend through the existing fill and soft native soils and bear in the medium dense to dense sandy soils. Additionally, the deposits of fill and the thickness of the very loose to loose soft soils above the bearing material could be a concern for lateral confinement and may result in the pier buckling. The designer of the helical pier (Midwest) should evaluate whether the design should incorporate a grout column around the shaft. GESTRA did not review any plans or evaluate the piers for the need of a grout column and/ or perform any analysis of lateral strength since this was out of scope for the project.

GESTRA was provided with a copy of a letter from Midwest dated March 7, 2013. The letter was prepared by Midwest after they reviewed the above discussion in a previous version of this report dated February 28, 2017. In the letter, Midwest acknowledges that pier buckling evaluation will be part of their foundation design. A copy of this letter is attached to this report.

### 4.2 Methane Mitigation Recommendations

It is our understanding that both additions will be a slab on grade structure supported above fill the existing fill material. Fill material and underlying organic soil was observed in the soil borings within the building footprint. The fill material and organic soil may indicate a potential for methane generation. The presence of methane beneath the proposed building may create a potentially hazardous situation. It is our understanding that the potential for methane generation and the need for a methane mitigation system have been evaluated by an Environmental Specialist. Evaluation of the methane, slab design and overall slab on grade support and performance is outside GESTRA's scope of work for this project.

## 5.0 EXPLORATION AND TESTING PROCEDURES

### 5.1 Layout and Elevation Procedures

A total of two (2) soil borings were completed at the locations shown on the attached Borehole Location Map in Appendix I. The borings were located in the field by Key. Estimated elevations of the borehole locations were provided by Key.

### 5.2 Field Testing Procedures

All of the boreholes were drilled using a truck mounted CME 75 drill rig. The boreholes were initiated and advanced by using 3¼ inch hollow stem augers. During drilling, soil samples were collected at 2½ foot intervals to 16 feet and then at 5 foot intervals to the termination depth of the borings. All representative soil samples were taken in general accordance with the "Standard Method for Penetration Test and Split-Barrel Sampling of Soils" (ASTM D1586) and "Standard Practice for Thin-Walled Tube Sampling" (ASTM D1587). After each sampling, a soil sample was retained and placed in a jar and recorded for type, color, consistency, and moisture, sealed and then transported to the laboratory for further review and testing, if required. The specific drilling method used including the depths, rig type, crew chief, and borehole abandonment are included on each of the individual boring logs as it may change for each hole.

### 5.3 Laboratory Testing Procedures

After completion of drilling operations, all of the retained soil samples were transported to GESTRA's laboratory and classified by a geotechnical engineer using the Unified Soil Classification System (USCS). A chart describing the classification system used is included in the Appendix of this report. The engineer then assigned laboratory testing suited to extract important index properties of the soil layers. These tests included hand penetrometer, moisture content and organic content, Atterberg limits, grain size, dry unit weights and unconfined compressive strength testing.

## STANDARD OF CARE

Our exploration was limited to evaluating subsurface soil and groundwater conditions pertaining to the proposed project. GESTRA did not perform any environmental, chemical, or hydrogeologic testing as these were not part of our work scope.

This report should be made available in its entirety to bidding contractors for information purposes. The soil borings and site sketch should not be detached from this report. Our report is not valid if used for purposes other than what is described in the report.

All OSHA regulations such as those regarding proper sloping and temporary shoring of excavations should be followed during the entire construction process.

GESTRA has presented our professional opinions in this report in the form of recommendations. Our opinions are based on our understanding of current project information and related accepted engineering practices at the time of this report. Evaluation of the building slab design and overall slab on grade support and performance is outside GESTRA's scope of work for this project. Other than this, no warranty is implied or intended.

Sincerely,

GESTRA Engineering, Inc.

Report Prepared By:

Eric Jeske, P.E.
Staff Engineer

Report Reviewed By:

Douglas Dettmers, P.E.
Senior Engineer

# APPENDIX I

BOREHOLE LOCATION MAPS, TEST BORING LOGS, NOMENCLATURE, AND MIDWEST DRILLED FOUNDATIONS & ENGINEERING, INC. LETTER DATED MARCH 7, 2017

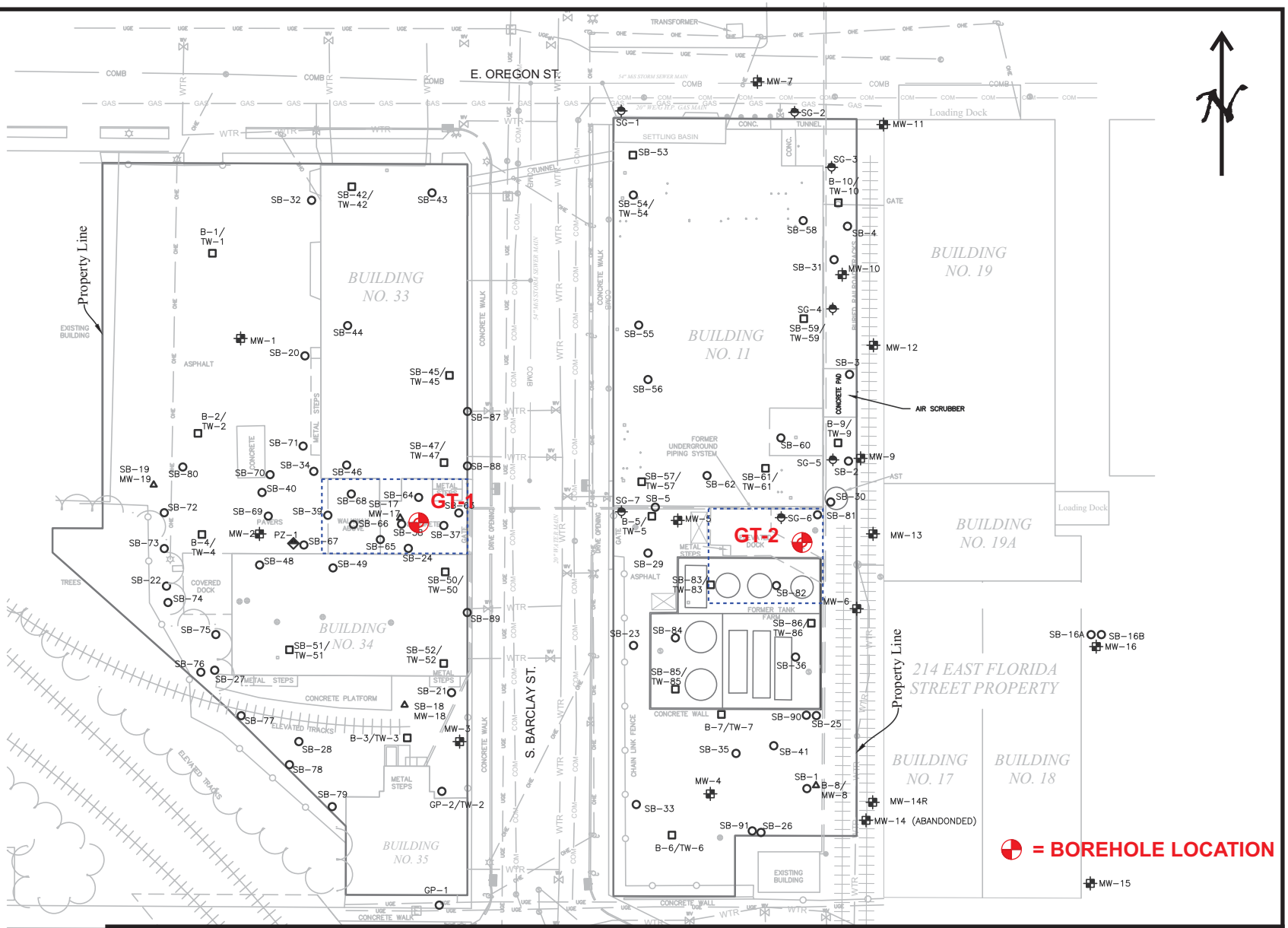


GESTRA Engineering, Inc.
191 W. Edgerton Avenue
Milwaukee, WI 53207
Phone: (414) 933-7444
Fax: (414) 933-7844

**Project Name & Location:**
Barclay Development
300 S. Barclay St and 139 E. Oregon St.
Milwaukee, WI

**Drawing Title:**
Borehole Location Map

**Project No.:** 17030-10

**Scale:** 1" = 60'

**Drawing No.:** 1 of 1

**Checked by:** ESJ

**Checked by:** DD

**Date:** February 24, 2017

# SOIL BORING LOG

Gestra Engineering Inc.
191 W. Edgerton Avenue
Milwaukee, WI 53207
Phone: 414-933-7444, Fax: 414-933-7844



| | | | |
|---|---|---|---|
| PROJECT NAME: Barclay Development | DATE DRILLING STARTED: 2/6/2017 | BORING NUMBER: GT-1 | |
| PROJECT LOCATION: Milwaukee, WI | DATE DRILLING ENDED: 2/6/2017 | PROJECT NUMBER: 17030-10 | |
| | | DRILLING RIG: CME 75 (HT) | |
| BORING DRILLED BY: FIRM: Gestra, CREW CHIEF: A. Woerpel | FIELD LOG: D. Harris | LATITUDE: ° ' " | DRILLING METHOD: 4¼" HSA w/ RW |
| | LAB LOG / QC: E. Jeske | LONGITUDE: ° ' " | SURFACE ELEVATION: 589 ft |

| Number and Type | Recovery (in) | Blow Counts | N - Value | Depth (ft) | Elevation | Soil Description and Geological Origin for Each Major Unit | USCS Classification | Graphic | Well Diagram | Unconfined Comp. Strength ($Q_u$ or $Q_p$) (tsf) | Liquid Limit | Plasticity Index | Moisture Content (%) | Comments |
|---|---|---|---|---|---|---|---|---|---|---|---|---|---|---|
| | | | | | | ASPHALT (6") 0.5 (588.5) | | | | | | | | |
| | | | | | | CONCRETE (6") 1 (588) | | | | | | | | |
| SS - 1 | 16 | 4 4 4 | 8 | | | BASE COURSE (8") 1.7 (587.3) | | | | | | | | |
| | | | | | 585.0 | SILTY SAND, dark brown, moist, trace gravel, with foundry material, (FILL) 3.9 (585.1) | | | | | | | | |
| SS - 2 | 12 | 4 5 4 | 9 | 5 | | SANDY LEAN CLAY, gray with dark gray and black, moist, trace gravel, fuel odor, (FILL) 6.3 (582.7) | | | | 1.50 | | | 17.4 | |
| | | | | | | SAND, black, wet, foundry material, fuel odor, (FILL) 8.7 (580.3) | | | | | | | | |
| SS - 3 | 10 | 2 6 4 | 10 | | | ▽ | | | | | | | | |
| | | | | | 580.0 | LEAN CLAY, gray, moist, (FILL) 12.7 (576.3) | | | | | | | | |
| SS - 4 | 16 | 1 2 2 | 4 | 10 | | | | | | 0.50 | | | 18.4 | |
| SH - 5 | | | | | | PEAT, black, moist, very loose 17.6 (571.4) | | | | | | | | |
| | | | | | 575.0 | | | | | | | | | |
| SS - 6 | 18 | 1 2 2 | 4 | 15 | | | PT | | | | | | 182.3 | LOI = 47.5%<br>Driller converted to mud rotary at 16' |
| SH - 7 | | | | | | SAND WITH SILT, gray, wet, very loose | | | | | | | | |
| | | | | | 570.0 | | | | | | | | | |
| SS - 8 | 15 | 2 1 2 | 3 | 20 | | 3 inch thick clay seam in sample SS-8 | | | | | | | | |
| | | | | | | | SP-SM | | | | | | | |
| | | | | | 565.0 | | | | | | | | | |
| SS - 9 | 14 | 2 2 2 | 4 | 25 | | Traces of shells in sample SS-9 27.6 (561.4) | | | | | | | | |
| | | | | | | ELASTIC SILT, gray, moist, with sand seams, very loose, trace organics | | | | | | | | |
| | | | | | 560.0 | | MH | | | | | | | |
| | | | | 30 | | | | | | | | | | |

## WATER & CAVE-IN OBSERVATION DATA

| | | | |
|---|---|---|---|
| ▽ WATER ENCOUNTERED DURING DRILLING: 8 ft. | | CAVE DEPTH AT COMPLETION: NMR | WET ☐ DRY ☐ |
| ▼ WATER LEVEL AT COMPLETION: NMR | | CAVE DEPTH AFTER 0 HOURS: NMR | WET ☐ DRY ☐ |
| ▼ WATER LEVEL AFTER 0 HOURS: NMR | | | |

NOTE: Stratification lines between soil types represent the approximate boundary; gradual transition between in-situ soil layers should be expected.

# SOIL BORING LOG

Gestra Engineering Inc.
191 W. Edgerton Avenue
Milwaukee, WI 53207
Phone: 414-933-7444, Fax: 414-933-7844



| | |
|---|---|
| PROJECT NAME | Barclay Development |
| DATE DRILLING STARTED | 2/6/2017 |
| PROJECT LOCATION | Milwaukee, WI |
| DATE DRILLING ENDED | 2/6/2017 |
| BORING NUMBER | GT-1 |
| PROJECT NUMBER | 17030-10 |
| DRILLING RIG | CME 75 (HT) |
| BORING DRILLED BY | FIRM: Gestra<br>CREW CHIEF: A. Woerpel |
| FIELD LOG | D. Harris |
| LAB LOG / QC | E. Jeske |
| LATITUDE | ° ' " |
| LONGITUDE | ° ' " |
| DRILLING METHOD | 4¼" HSA w/ RW |
| SURFACE ELEVATION | 589 ft |

| Number and Type | Recovery (in) | Blow Counts | N - Value | Depth (ft) | Elevation | Soil Description and Geological Origin for Each Major Unit | USCS Classification | Graphic | Well Diagram | Unconfined Comp. Strength ($Q_u$ or $Q_p$) (tsf) | Liquid Limit | Plasticity Index | Moisture Content (%) | Comments |
|---|---|---|---|---|---|---|---|---|---|---|---|---|---|---|
| SS - 10 | 16 | 1 1 2 | 3 | | | ELASTIC SILT, gray, moist, with sand seams, very loose, trace organics | | | | | | | 47.6 | LOI = 3.4% |
| | | | | | 555.0 | | | | | | | | | |
| SS - 11 | 18 | 2 2 2 | 4 | 35 | | | MH | | | | | | | |
| | | | | | 550.0 | | | | | | | | | |
| SS - 12 | 18 | 2 1 1 | 2 | 40 | | | | | | | | | 55.7 | $\gamma_d$ = 73.5 pcf<br>$\gamma_T$ = 114.5 pcf |
| | | | | | | 42.8 (546.2) | | | | | | | | |
| | | | | | 545.0 | ELASTIC SILT, gray, moist, very loose, trace organics | | | | | | | | |
| SS - 13 | 18 | 1 1 1 | 2 | 45 | | | | | | | | | 65.5 | LOI = 5.5% |
| | | | | | 540.0 | | | | | | | | | |
| SS - 14 | 18 | 0 1 1 | 2 | 50 | | | MH | | | | | | 66.1 | |
| | | | | | 535.0 | | | | | | | | | |
| SS - 15 | 18 | 0 1 1 | 2 | 55 | | | | | | | | | 64.7 | |
| | | | | | 530.0 | | | | | | | | | |
| | | | | 60 | | | | | | | | | | |

## WATER & CAVE-IN OBSERVATION DATA

| | | | |
|---|---|---|---|
| WATER ENCOUNTERED DURING DRILLING: 8 ft. | | CAVE DEPTH AT COMPLETION: NMR | WET ☐ DRY ☐ |
| WATER LEVEL AT COMPLETION: NMR | | CAVE DEPTH AFTER 0 HOURS: NMR | WET ☐ DRY ☐ |
| WATER LEVEL AFTER 0 HOURS: NMR | | | |

NOTE: Stratification lines between soil types represent the approximate boundary; gradual transition between in-situ soil layers should be expected.

# SOIL BORING LOG

**Gestra Engineering Inc.**
191 W. Edgerton Avenue
Milwaukee, WI 53207
Phone: 414-933-7444, Fax: 414-933-7844



| | | | |
|---|---|---|---|
| PROJECT NAME: Barclay Development | DATE DRILLING STARTED: 2/6/2017 | BORING NUMBER: GT-1 | |
| PROJECT LOCATION: Milwaukee, WI | DATE DRILLING ENDED: 2/6/2017 | PROJECT NUMBER: 17030-10 | |
| | | DRILLING RIG: CME 75 (HT) | |
| BORING DRILLED BY: FIRM: Gestra, CREW CHIEF: A. Woerpel | FIELD LOG: D. Harris | LATITUDE: ° ' " | DRILLING METHOD: 4¼" HSA w/ RW |
| | LAB LOG / QC: E. Jeske | LONGITUDE: ° ' " | SURFACE ELEVATION: 589 ft |

| Number and Type | Recovery (in) | Blow Counts | N - Value | Depth (ft) | Elevation | Soil Description and Geological Origin for Each Major Unit | USCS Classification | Graphic | Well Diagram | Unconfined Comp. Strength ($Q_u$ or $Q_p$) (tsf) | Liquid Limit | Plasticity Index | Moisture Content (%) | Comments |
|---|---|---|---|---|---|---|---|---|---|---|---|---|---|---|
| SS - 16 | 18 | 1 1 1 | 2 | | | ELASTIC SILT, gray, moist, very loose, trace organics | | | | | | | 63.9 | LOI = 4.0% |
| | | | | | 525.0 | | | | | | | | | |
| SS - 17 | 18 | 2 1 3 | 4 | 65 | | | MH | | | | | | 58.8 | |
| | | | | | 520.0 | | | | | | | | | |
| SS - 18 | 18 | 1 2 3 | 5 | 70 | | | | | | | | | 49.2 | |
| | | | | | | 72.8 (516.2) | | | | | | | | |
| | | | | | 515.0 | SILTY SAND, gray, wet, medium dense, fine to medium grained sand | | | | | | | | |
| SS - 19 | 14 | 5 7 5 | 12 | 75 | | | SM | | | | | | | |
| | | | | | 510.0 | | | | | | | | | |
| SS - 20 | 16 | 4 6 8 | 14 | 80 | | | | | | | | | | |
| | | | | | | 82.7 (506.3) | | | | | | | | |
| | | | | | 505.0 | SAND WITH GRAVEL, gray, wet, dense, fine to coarse grained sand | | | | | | | | |
| SS - 21 | 10 | 20 17 14 | 31 | 85 | | | SP | | | | | | | |
| | | | | | 500.0 | | | | | | | | | |
| | | | | 90 | | | | | | | | | | |

## WATER & CAVE-IN OBSERVATION DATA

| | | | |
|---|---|---|---|
| WATER ENCOUNTERED DURING DRILLING: 8 ft. | | CAVE DEPTH AT COMPLETION: NMR | WET ☐ DRY ☐ |
| WATER LEVEL AT COMPLETION: NMR | | CAVE DEPTH AFTER 0 HOURS: NMR | WET ☐ DRY ☐ |
| WATER LEVEL AFTER 0 HOURS: NMR | | | |

NOTE: Stratification lines between soil types represent the approximate boundary; gradual transition between in-situ soil layers should be expected.

# SOIL BORING LOG

**Gestra Engineering Inc.**
191 W. Edgerton Avenue
Milwaukee, WI 53207
Phone: 414-933-7444, Fax: 414-933-7844



| | | | |
|---|---|---|---|
| PROJECT NAME: Barclay Development | DATE DRILLING STARTED: 2/6/2017 | BORING NUMBER: **GT-1** | |
| PROJECT LOCATION: Milwaukee, WI | DATE DRILLING ENDED: 2/6/2017 | PROJECT NUMBER: 17030-10 | |
| | | DRILLING RIG: CME 75 (HT) | |
| BORING DRILLED BY: FIRM: Gestra, CREW CHIEF: A. Woerpel | FIELD LOG: D. Harris | LATITUDE: ° ' " | DRILLING METHOD: 4¼" HSA w/ RW |
| | LAB LOG / QC: E. Jeske | LONGITUDE: ° ' " | SURFACE ELEVATION: 589 ft |

| Number and Type | Recovery (in) | Blow Counts | N - Value | Depth (ft) | Elevation | Soil Description and Geological Origin for Each Major Unit | USCS Classification | Graphic | Well Diagram | Unconfined Comp. Strength ($Q_u$ or $Q_p$) (tsf) | Liquid Limit | Plasticity Index | Moisture Content (%) | Comments |
|---|---|---|---|---|---|---|---|---|---|---|---|---|---|---|
| SS - 22 | 11 | 12 19 20 | 39 | | | SAND WITH GRAVEL, gray, wet, dense, fine to coarse grained sand | SP | | | | | | | |
| | | | | | | 92.5 (496.5) | | | | | | | | |
| | | | | | | LEAN CLAY, gray, moist, medium stiff to very stiff | | | | | | | | |
| | | | | | 495.0 | | | | | | | | | |
| SS - 23 | 18 | 7 4 6 | 10 | 95 | | | | | | 2.00 **(0.9)** | | | 13.5 | $\gamma_d$ = 129.8 pcf, $\gamma_T$ = 147.3 pcf |
| | | | | | | | CL | | | | | | | |
| | | | | | 490.0 | | | | | | | | | |
| SS - 24 | 18 | 4 6 7 | 13 | 100 | | | | | | 2.00 | | | 13.5 | |
| | | | | | | 102.8 (486.2) | | | | | | | | |
| | | | | | | SILTY SAND, gray, wet, medium dense | | | | | | | | |
| | | | | | 485.0 | | | | | | | | | |
| SS - 25 | 15 | 6 10 10 | 20 | 105 | | | | | | | | | | |
| | | | | | | | SM | | | | | | | |
| | | | | | 480.0 | | | | | | | | | |
| SS - 26 | 14 | 7 12 11 | 23 | 110 | | | | | | | | | | |
| | | | | | | 112.8 (476.2) | | | | | | | | |
| | | | | | | SANDY SILT, gray, moist, medium dense | | | | | | | | |
| | | | | | 475.0 | | | | | | | | | |
| SS - 27 | 16 | 7 10 10 | 20 | 115 | | | | | | | | | | |
| | | | | | | | ML | | | | | | | |
| | | | | | 470.0 | | | | | | | | | |
| | | | | 120 | | 3 inch clay seam in sample SS-28 | | | | | | | | |

## WATER & CAVE-IN OBSERVATION DATA

| | | | |
|---|---|---|---|
| WATER ENCOUNTERED DURING DRILLING: 8 ft. | | CAVE DEPTH AT COMPLETION: NMR | WET ☐ DRY ☐ |
| WATER LEVEL AT COMPLETION: NMR | | CAVE DEPTH AFTER 0 HOURS: NMR | WET ☐ DRY ☐ |
| WATER LEVEL AFTER 0 HOURS: NMR | | | |

NOTE: Stratification lines between soil types represent the approximate boundary; gradual transition between in-situ soil layers should be expected.

# SOIL BORING LOG

Gestra Engineering Inc.
191 W. Edgerton Avenue
Milwaukee, WI 53207
Phone: 414-933-7444, Fax: 414-933-7844



| | |
|---|---|
| PROJECT NAME | Barclay Development |
| DATE DRILLING STARTED | 2/6/2017 |
| PROJECT LOCATION | Milwaukee, WI |
| DATE DRILLING ENDED | 2/6/2017 |
| BORING NUMBER | GT-1 |
| PROJECT NUMBER | 17030-10 |
| DRILLING RIG | CME 75 (HT) |
| BORING DRILLED BY | FIRM: Gestra<br>CREW CHIEF: A. Woerpel |
| FIELD LOG | D. Harris |
| LAB LOG / QC | E. Jeske |
| LATITUDE | ° ' " |
| LONGITUDE | ° ' " |
| DRILLING METHOD | 4¼" HSA w/ RW |
| SURFACE ELEVATION | 589 ft |

| Number and Type | Recovery (in) | Blow Counts | N - Value | Depth (ft) | Elevation | Soil Description and Geological Origin for Each Major Unit | USCS Classification | Graphic | Well Diagram | Unconfined Comp. Strength ($Q_u$ or $Q_p$) (tsf) | Liquid Limit | Plasticity Index | Moisture Content (%) | Comments |
|---|---|---|---|---|---|---|---|---|---|---|---|---|---|---|
| SS - 28 | 16 | 7<br>10<br>12 | 22 | | | SANDY SILT, gray, moist, medium dense<br>121 (468) | ML | | | | | | | |
| | | | | | | End of Boring at 121.0 ft. | | | | | | | | |
| | | | | | 465.0 | | | | | | | | | |
| | | | | 125 | | | | | | | | | | |
| | | | | | 460.0 | | | | | | | | | |
| | | | | 130 | | | | | | | | | | |
| | | | | | 455.0 | | | | | | | | | |
| | | | | 135 | | | | | | | | | | |
| | | | | | 450.0 | | | | | | | | | |
| | | | | 140 | | | | | | | | | | |
| | | | | | 445.0 | | | | | | | | | |
| | | | | 145 | | | | | | | | | | |
| | | | | | 440.0 | | | | | | | | | |
| | | | | 150 | | | | | | | | | | |

## WATER & CAVE-IN OBSERVATION DATA

| | | | |
|---|---|---|---|
| WATER ENCOUNTERED DURING DRILLING: 8 ft. | | CAVE DEPTH AT COMPLETION: NMR | WET ☐ DRY ☐ |
| WATER LEVEL AT COMPLETION: NMR | | CAVE DEPTH AFTER 0 HOURS: NMR | WET ☐ DRY ☐ |
| WATER LEVEL AFTER 0 HOURS: NMR | | | |

NOTE: Stratification lines between soil types represent the approximate boundary; gradual transition between in-situ soil layers should be expected.

# SOIL BORING LOG

Gestra Engineering Inc.
191 W. Edgerton Avenue
Milwaukee, WI 53207
Phone: 414-933-7444, Fax: 414-933-7844



| | |
|---|---|
| PROJECT NAME | Barclay Development |
| DATE DRILLING STARTED | 2/7/2017 |
| PROJECT LOCATION | Milwaukee, WI |
| DATE DRILLING ENDED | 2/7/2017 |
| BORING NUMBER | GT-2 |
| PROJECT NUMBER | 17030-10 |
| DRILLING RIG | CME 75 (HT) |
| BORING DRILLED BY | FIRM: Gestra<br>CREW CHIEF: A. Woerpel |
| FIELD LOG | D. Harris |
| LAB LOG / QC | E. Jeske |
| LATITUDE | ° ' " |
| LONGITUDE | ° ' " |
| DRILLING METHOD | 4¼" HSA w/ RW |
| SURFACE ELEVATION | 589 ft |

| Number and Type | Recovery (in) | Blow Counts | N - Value | Depth (ft) | Elevation | Soil Description and Geological Origin for Each Major Unit | USCS Classification | Graphic | Well Diagram | Unconfined Comp. Strength ($Q_u$ or $Q_p$) (tsf) | Liquid Limit | Plasticity Index | Moisture Content (%) | Comments |
|---|---|---|---|---|---|---|---|---|---|---|---|---|---|---|
| | | | | | | CONCRETE (6") | | | | | | | | |
| | | | | | | 0.5 (588.5) | | | | | | | | |
| | | | | | | SAND, black to dark brown, moist, foundry material, (FILL) | | | | | | | | |
| SS - 1 | 15 | 4 6 12 | 18 | | | | | | | | | | | |
| | | | | | 585.0 | | | | | | | | | |
| SS - 2 | 14 | 5 9 7 | 16 | 5 | | | | | | | | | | |
| | | | | | | 6.3 (582.7) | | | | | | | | |
| | | | | | | LEAN CLAY, gray, moist, (FILL) | | | | | | | | |
| SS - 3 | 15 | 2 2 1 | 3 | | | | | | | 0.50 | | | 20.7 | LOI = 1.3% |
| | | | | | 580.0 | | | | | | | | | |
| SH - 4 | | | | 10 | | 9.8 (579.2) | | | | | | | | |
| | | | | | | SANDY SILT, gray, moist, (FILL) | | | | | | | | |
| SS - 5 | 18 | 1 1 1 | 2 | | | | | | | | | | 18.3 | |
| | | | | | 575.0 | | | | | | | | | |
| SS - 6 | 18 | 0 0 1 | 1 | 15 | | | | | | | | | 21.2 | |
| | | | | | | | | | | | | | | Driller converted to mud rotary at 16' |
| | | | | | | 17.8 (571.2) | | | | | | | | |
| | | | | | | SILT, brown, moist, very loose, with sand and peat seams | | | | | | | | |
| | | | | | 570.0 | | | | | | | | | |
| SS - 7 | 18 | 1 1 3 | 4 | 20 | | | ML | | | | | | 52.7 | LOI = 5.7% |
| | | | | | | 22.8 (566.2) | | | | | | | | |
| | | | | | | SAND, gray, wet, very loose to loose | | | | | | | | |
| | | | | | 565.0 | | | | | | | | | |
| SS - 8 | 12 | 2 2 2 | 4 | 25 | | | | | | | | | | |
| | | | | | | | SP | | | | | | | |
| | | | | | 560.0 | | | | | | | | | |
| | | | | 30 | | | | | | | | | | |

## WATER & CAVE-IN OBSERVATION DATA

| | | | |
|---|---|---|---|
| WATER ENCOUNTERED DURING DRILLING: NMR ft. | | CAVE DEPTH AT COMPLETION: NMR | WET ☐ DRY ☐ |
| WATER LEVEL AT COMPLETION: NMR | | CAVE DEPTH AFTER 0 HOURS: NMR | WET ☐ DRY ☐ |
| WATER LEVEL AFTER 0 HOURS: NMR | | | |

NOTE: Stratification lines between soil types represent the approximate boundary; gradual transition between in-situ soil layers should be expected.

# SOIL BORING LOG

Gestra Engineering Inc.
191 W. Edgerton Avenue
Milwaukee, WI 53207
Phone: 414-933-7444, Fax: 414-933-7844



| | |
|---|---|
| PROJECT NAME | Barclay Development |
| DATE DRILLING STARTED | 2/7/2017 |
| PROJECT LOCATION | Milwaukee, WI |
| DATE DRILLING ENDED | 2/7/2017 |
| BORING NUMBER | GT-2 |
| PROJECT NUMBER | 17030-10 |
| DRILLING RIG | CME 75 (HT) |
| BORING DRILLED BY | FIRM: Gestra<br>CREW CHIEF: A. Woerpel |
| FIELD LOG | D. Harris |
| LAB LOG / QC | E. Jeske |
| LATITUDE | ° ' " |
| LONGITUDE | ° ' " |
| DRILLING METHOD | 4¼" HSA w/ RW |
| SURFACE ELEVATION | 589 ft |

| Number and Type | Recovery (in) | Blow Counts | N - Value | Depth (ft) | Elevation | Soil Description and Geological Origin for Each Major Unit | USCS Classification | Graphic | Well Diagram | Unconfined Comp. Strength ($Q_u$ or $Q_p$) (tsf) | Liquid Limit | Plasticity Index | Moisture Content (%) | Comments |
|---|---|---|---|---|---|---|---|---|---|---|---|---|---|---|
| SS - 9 | 15 | 2 2 3 | 5 | | | SAND, gray, wet, very loose to loose | SP | | | | | | | |
| | | | | | | 32.6 (556.4) | | | | | | | | |
| | | | | | 555.0 | ELASTIC SILT, gray, moist, very loose, trace organics | MH | | | | | | | |
| SS - 10 | 15 | 2 2 1 | 3 | 35 | | | | | | | | | 63.3 | |
| | | | | | | 37.6 (551.4) | | | | | | | | |
| | | | | | 550.0 | SILTY SAND, gray, wet, very loose | SM | | | | | | | |
| SS - 11 | 18 | 1 1 2 | 3 | 40 | | | | | | | | | | |
| | | | | | | 42.8 (546.2) | | | | | | | | |
| | | | | | 545.0 | ELASTIC SILT, gray, moist, very loose, trace organics | MH | | | | | | | |
| SS - 12 | 18 | 0 1 1 | 2 | 45 | | | | | | | | | 74.4 | LOI = 7.6% |
| SH - 13 | | | | | 540.0 | | | | | | | | | |
| SS - 14 | 18 | 0 1 1 | 2 | 50 | | | | | | | | | 64.7 | LOI = 4.1% |
| | | | | | 535.0 | | | | | | | | | |
| SS - 15 | 18 | 0 0 1 | 1 | 55 | | | | | | | | | 61.3 | |
| | | | | | 530.0 | | | | | | | | | |
| | | | | 60 | | | | | | | | | | |

## WATER & CAVE-IN OBSERVATION DATA

| | | | |
|---|---|---|---|
| WATER ENCOUNTERED DURING DRILLING: NMR ft. | | CAVE DEPTH AT COMPLETION: NMR | WET ☐ DRY ☐ |
| WATER LEVEL AT COMPLETION: NMR | | CAVE DEPTH AFTER 0 HOURS: NMR | WET ☐ DRY ☐ |
| WATER LEVEL AFTER 0 HOURS: NMR | | | |

NOTE: Stratification lines between soil types represent the approximate boundary; gradual transition between in-situ soil layers should be expected.

# SOIL BORING LOG

Gestra Engineering Inc.
191 W. Edgerton Avenue
Milwaukee, WI 53207
Phone: 414-933-7444, Fax: 414-933-7844



| | |
|---|---|
| PROJECT NAME | Barclay Development |
| DATE DRILLING STARTED | 2/7/2017 |
| PROJECT LOCATION | Milwaukee, WI |
| DATE DRILLING ENDED | 2/7/2017 |
| BORING NUMBER | GT-2 |
| PROJECT NUMBER | 17030-10 |
| DRILLING RIG | CME 75 (HT) |
| BORING DRILLED BY | FIRM: Gestra<br>CREW CHIEF: A. Woerpel |
| FIELD LOG | D. Harris |
| LAB LOG / QC | E. Jeske |
| LATITUDE | ° ' " |
| LONGITUDE | ° ' " |
| DRILLING METHOD | 4¼" HSA w/ RW |
| SURFACE ELEVATION | 589 ft |

| Number and Type | Recovery (in) | Blow Counts | N - Value | Depth (ft) | Elevation | Soil Description and Geological Origin for Each Major Unit | USCS Classification | Graphic | Well Diagram | Unconfined Comp. Strength ($Q_u$ or $Q_p$) (tsf) | Liquid Limit | Plasticity Index | Moisture Content (%) | Comments |
|---|---|---|---|---|---|---|---|---|---|---|---|---|---|---|
| SS - 16 | 18 | 0<br>1<br>1 | 2 | | | ELASTIC SILT, gray, moist, very loose, trace organics | | | | | | | 59.1 | |
| | | | | | 525.0 | | | | | | | | | |
| SS - 17 | 18 | 1<br>1<br>2 | 3 | 65 | | | MH | | | | 64 | 29 | 65.3 | $\gamma_d$ = 59.7 pcf<br>$\gamma_T$ = 98.7 pcf<br>LOI = 5.9% |
| | | | | | 520.0 | | | | | | | | | |
| SS - 18 | 18 | 1<br>1<br>2 | 3 | 70 | | | | | | | | | 55.4 | |
| | | | | | | 72.8 (516.2) | | | | | | | | |
| | | | | | | SILTY SAND, gray, wet, medium dense | | | | | | | | |
| | | | | | 515.0 | | | | | | | | | |
| SS - 19 | 15 | 5<br>9<br>11 | 20 | 75 | | | SM | | | | | | | |
| | | | | | | 77.6 (511.4) | | | | | | | | |
| | | | | | | SILT, gray, moist, very loose | | | | | | | | |
| | | | | | 510.0 | | | | | | | | | |
| SS - 20 | 18 | 1<br>1<br>1 | 2 | 80 | | | ML | | | | | | 28.7 | |
| | | | | | | 82.8 (506.2) | | | | | | | | |
| | | | | | | SAND WITH GRAVEL, gray, wet, fine to coarse grained sand | | | | | | | | |
| | | | | | 505.0 | | | | | | | | | |
| SS - 21 | 10 | 12<br>11<br>6 | 17 | 85 | | | SP | | | | | | | |
| | | | | | 500.0 | | | | | | | | | |
| | | | | 90 | | | | | | | | | | |

## WATER & CAVE-IN OBSERVATION DATA

| | | | |
|---|---|---|---|
| WATER ENCOUNTERED DURING DRILLING: NMR ft. | | CAVE DEPTH AT COMPLETION: NMR | WET ☐ DRY ☐ |
| WATER LEVEL AT COMPLETION: NMR | | CAVE DEPTH AFTER 0 HOURS: NMR | WET ☐ DRY ☐ |
| WATER LEVEL AFTER 0 HOURS: NMR | | | |

NOTE: Stratification lines between soil types represent the approximate boundary; gradual transition between in-situ soil layers should be expected.

# SOIL BORING LOG

Gestra Engineering Inc.
191 W. Edgerton Avenue
Milwaukee, WI 53207
Phone: 414-933-7444, Fax: 414-933-7844



| | |
|---|---|
| PROJECT NAME | Barclay Development |
| DATE DRILLING STARTED | 2/7/2017 |
| PROJECT LOCATION | Milwaukee, WI |
| DATE DRILLING ENDED | 2/7/2017 |
| BORING NUMBER | GT-2 |
| PROJECT NUMBER | 17030-10 |
| DRILLING RIG | CME 75 (HT) |
| BORING DRILLED BY | FIRM: Gestra<br>CREW CHIEF: A. Woerpel |
| FIELD LOG | D. Harris |
| LAB LOG / QC | E. Jeske |
| LATITUDE | ° ' " |
| LONGITUDE | ° ' " |
| DRILLING METHOD | 4¼" HSA w/ RW |
| SURFACE ELEVATION | 589 ft |

| Number and Type | Recovery (in) | Blow Counts | N - Value | Depth (ft) | Elevation | Soil Description and Geological Origin for Each Major Unit | USCS Classification | Graphic | Well Diagram | Unconfined Comp. Strength ($Q_u$ or $Q_p$) (tsf) | Liquid Limit | Plasticity Index | Moisture Content (%) | Comments |
|---|---|---|---|---|---|---|---|---|---|---|---|---|---|---|
| SS - 22 | 12 | 9<br>9<br>10 | 19 | | | SAND WITH GRAVEL, gray, wet, fine to coarse grained sand | SP | | | | | | | |
| | | | | | | 92.5 (496.5) | | | | | | | | |
| | | | | | | LEAN CLAY, gray, moist, very stiff to hard | | | | | | | | |
| | | | | | 495.0 | | | | | | | | | |
| SS - 23 | 18 | 11<br>11<br>14 | 25 | 95 | | | CL | | | 3.00 | | | 24.4 | |
| | | | | | 490.0 | | | | | | | | | |
| SS - 24 | 18 | 10<br>13<br>15 | 28 | 100 | | | | | | 4.5+ | | | 22.5 | |
| | | | | | | 101 (488) | | | | | | | | |
| | | | | | | End of Boring at 101.0 ft. | | | | | | | | |
| | | | | | 485.0 | | | | | | | | | |
| | | | | 105 | | | | | | | | | | |
| | | | | | 480.0 | | | | | | | | | |
| | | | | 110 | | | | | | | | | | |
| | | | | | 475.0 | | | | | | | | | |
| | | | | 115 | | | | | | | | | | |
| | | | | | 470.0 | | | | | | | | | |
| | | | | 120 | | | | | | | | | | |

## WATER & CAVE-IN OBSERVATION DATA

| | | | |
|---|---|---|---|
| WATER ENCOUNTERED DURING DRILLING: NMR ft. | | CAVE DEPTH AT COMPLETION: NMR | WET ☐ DRY ☐ |
| WATER LEVEL AT COMPLETION: NMR | | CAVE DEPTH AFTER 0 HOURS: NMR | WET ☐ DRY ☐ |
| WATER LEVEL AFTER 0 HOURS: NMR | | | |

NOTE: Stratification lines between soil types represent the approximate boundary; gradual transition between in-situ soil layers should be expected.

# GENERAL NOTES

## DRILLING AND SAMPLING SYMBOLS

| SYMBOL | DEFINITION |
|---|---|
| HSA | Hollow Stem Auger |
| RWB | Rotary Wash Boring (Mud Drilling) |
| _FA | 4", 6" or 10" Diameter Flight Auger |
| _HA | 2", 4" or 6" Hand Auger |
| _DC | 2 1/2" , 4" , 5" or 6" Steel Drive Casing |
| _RC | Size A, B, or N Rotary Casing |
| PD | Pipe Drill or Cleanout Tube |
| CS | Continuous Split Spoon Sampling |
| DM | Drill Mud |
| JW | Jetting Water |
| SS | 2" O.D. Split Spoon Sample |
| _L | 2 1/2" or 3 1/2" O.D. SB Liner Sample |
| ST | 3" Thin Walled Tube Sample (Shelby Tube) |
| 3TP | 3" Thin Walled Tube (Pitcher Sampler) |
| _TO | 2" or 3" Thin Walled Tube (Osterberg Sampler) |
| W | Wash Sample |
| B | Bag Sample |
| P | Test Pit Sample |
| _Q | BQ, NQ, or PQ Wireline System |
| _X | AX, BX, or NX Double Tube Barrel |
| CR | Core Recovery – Percent |
| NSR | No Sample Recovered, classification based on action of drilling, equipment and/or material noted in drilling fluid or on sampling bit. |
| NMR | No Measurement Recorded, primarily due to presence of drilling or coring fluid. |
| ▽ | Water Level Symbol |

## TEST SYMBOLS

| SYMBOL | DEFINITION |
|---|---|
| MC | Moisture Content - % of Dry Wt. – ASTM D 2216 |
| OC | Organic Content - % of Dry Wt. – ASTM D 2974 |
| DD | Dry Density – Pounds Per Cubic Foot |
| LL, PL | Liquid and Plastic Limit – ASTM D 4318 |

### Additional Insertions

| | |
|---|---|
| Qu | Unconfined Comp. Strength-psf – ASTM D 2166 |
| Qp | Penetrometer Reading – Tons/Square Foot |
| Ts | Torvane Reading – Tons/Square Foot |
| G | Specific Gravity – ASTM D 854 |
| SL | Shrinkage Limits – ASTM D 427 |
| OC | Organic Content – Combustion Method |
| SP | Swell Pressure - Tons/Square Foot |
| PS | Percent Swell |
| FS | Free Swell – Percent |
| pH | Hydrogen Ion Content. Meter Method |
| SC | Sulfate Content – Parts/ Million, same as mg/L |
| CC | Chloride Content - Parts/ Million, same as mg/L |
| C* | One Dimensional Consolidation – ASTM D 2453 |
| Qc* | Triaxial Compression |
| D.S.* | Direct Shear – ASTM D 3080 |
| K* | Coefficient of Permeability – cm/sec |
| D* | Dispersion test |
| DH* | Double Hydrometer – ASTM D 4221 |
| MA* | Particle Size Analysis – ASTM D 422 |
| R | Laboratory Receptivity, in ohm – cm – ASTM G 57 |
| E* | Pressuremeter Deformation Modulus – TSF |
| PM* | Pressuremeter Test |
| VS* | Field Vane Shear – ASTM D 2573 |
| IR* | Infiltrometer Test – ASTM D 3385 |
| RQD | Rock Quality Designation – Percent |

*See attached data sheet or graph

## WATER LEVEL

Water levels shown on the boring logs are the levels measured in the borings at the time and under the conditions indicated. In sand, the indicated levels may be considered reliable ground water levels. In clay soil, it may not be possible to determine the ground water level within the normal time required for test borings, except where lenses or layers of more pervious waterbearing soil are present. Even then, an extended period of time may be necessary to reach equilibrium. Therefore, the position of the water level symbol for cohesive or mixed texture soils may not indicate the true level of the ground water table. Perched water refers to water above an impervious layer, thus impeded in reaching the water table. The available water level information is given at the bottom of the log sheet.

# DESCRIPTIVE TERMINOLOGY

| DENSITY TERM | "N" VALUE |
|---|---|
| Very Loose | 0-4 |
| Loose | 4-10 |
| Medium Dense | 10-30 |
| Dense | 30-50 |
| Very Dense | Over 50 |

| CONSISTENCY TERM | Unconfined Compressive Strength, (tsf) | "N" VALUE |
|---|---|---|
| Very Soft | <0.25 | 0-2 |
| Soft | 0.25 - 0.49 | 2-4 |
| Medium Stiff | 0.5 - 0.99 | 4-8 |
| Stiff | 1.0 - 1.99 | 8-16 |
| Very Stiff | 2.0 - 3.99 | 16-30 |
| Hard | 4.0+ | Over 30 |

Standard "N" Penetration: Blows per Foot of a 140 Pound Hammer Falling 30 inches on a 2 inch OD Split Barrel Sampler

| | |
|---|---|
| Lamination | Up to 1/2" thick stratum |
| Layer | 1/2" to 6" thick stratum |
| Lens | 1/2" to 6" discontinuous stratum |
| Varved | Alternating laminations |
| Dry | Powdery, no noticeable water |
| Moist | Below saturation |
| Wet | Saturated, above liquid limit |
| Water bearing | Pervious soil below water |

## RELATIVE GRAVEL PROPORTIONS

| CONDITION | TERM | RANGE |
|---|---|---|
| Coarse Grained Soils | trace of gravel | 2-14% |
| | with gravel | 15-49% |
| Fine Grained Soils | | |
| 15-29% + No. 200 | trace of gravel | 2-14% |
| 15-29% + No. 200 | with gravel | 15-29% |
| 30% + No. 200 | trace of gravel | 2-14% |
| 30% + No. 200 | with gravel | 15-24% |
| 30% + No. 200 | gravelly | 25-49% |

## RELATIVE SIZES

| | |
|---|---|
| Boulder | Over 12" |
| Cobble | 3" - 12" |
| Gravel | |
| Coarse | 3/4" - 3" |
| Fine | #4 – 3/4" |
| Sand | |
| Coarse | #4 - #10 |
| Medium | #10 - #40 |
| Fine | #40- #200 |
| Silt & Clay | - # 200, Based on Plasticity |

# SOILS CLASSIFICATION FOR ENGINEERING PURPOSES

## ASTM Designation: D 2487 - 83

**(Based on Unified Soil Classification System)**

SOIL ENGINEERING

| | | Criteria for Assigning GroupSymbols and Group Names Using Laboratory Tests [A] | | Soil Classification[B] Group Symble | Group Name |
|---|---|---|---|---|---|
| Coarse-Grained Soils More than 50% retained on No. 200 sieve | Gravels More than 50% coarse fraction retained on No. 4 sieve | Clean Gravels Less Less than 5% fines [C] | Cu≥ 4 and 1≤ Cc ≤3[E] | GW | Well graded gravel [F] |
| | | | Cu< 4 and/or 1> Cc >3[E] | GP | Poorly graded gravel [F] |
| | | Gravels with Fines more than 12% fines [C] | Fines Classify as ML or MH | GM | Silty gravel [F.G.H.] |
| | | | Fines classify as CL or CH | GC | Clayey gravel [F.G.H.] |
| | Sands 50% or more of coarse fraction passes No. 4 sieve | Clean sandss Less than 5% fines [D] | Cu≥ 6 and 1≤ Cc ≤3[E] | SW | Well graded sand [I] |
| | | | Cu< 6 and/or 1> Cc >3[E] | SP | Poorly graded sand [I] |
| | | Sands with Fines more than 12% fines [D] | Fines Classify as ML or MH | SM | Silty sand [G.H.I] |
| | | | Fines classify as CL or CH | SC | Clayey sand [G.H.I] |
| Fine-Grained Soils 50% or more passes the No. 200 sieve | Silts and Clays Liquid Limit less than 50 | inorganic | PI >7 and plots on or above " A" line | CL | Lean clay [K.L.M] |
| | | | PI<4 or plots below " A " line | ML | Silt [K.L.M] |
| | | organic | Liquid limit - oven dried / Liquid limit - not dried < 0.75 | OL | Organic clay [K.L.M.N] Organic Silt [K.L.M.O] |
| | Silts and Clays Liquid Limit 50 or more | inorganic | PI plots on or above " A " line | CH | Fat clay [K.L.M] |
| | | | PI plots below " A " line | MH | Elastic silt [K.L.M] |
| | | Organic | Liquid limit - oven dried / Liquid limit - not dried < 0.75 | OH | Organic clay [K.L.M.P] Organic Silt [K.L.M.Q] |
| Highly organic Soils | | Primarily organic matter, dark in color, and organic odor | | PT | Peat |
| Fibric Peat > 67% Fibers | | Hemic Peat 33 % - 67 % Fibers | | sapric | Peat < 33% Fibers |

[A] Based on the material passing the 3-in (75- mm)sieve

[B] If field sample contained cobbles or boulders, or both. add with cobbles or boulders, or both to group name

[C] Gravels with 5 to 12 % fines require dual symbols:
GW - GM well-graded gravel with silt
GW - GC well-graded gravel with clay
GP - GM poorly-graded gravel with Silt
GP - GC poorly-graded gravel with clay

[D] Sands with 5 to 12 % fines require dual symbols:
SW -SM well-graded sand with silt
SW - SC well-graded sand with clay
SP - SM poorly-graded sand with Silt
SP - SC poorly-graded sand with clay

[E] $Cu = \frac{D_{60}}{D_{10}}$ $C_c = \frac{(D_{30})^2}{D_{10} \times D_{60}}$

[F] If soil contains ≥ 15% sand, add "with sand" to group name

[G] If fines classify as CL-ML, use dual symbol GC-GM. or SC-SM

[H] If fines are organic, add "with organic fines" to group name.

[I] If soil contains ≥15% gravel, add "with gravel" to group name.

[J] If Atterberg limits plot in hatched area, soil is a CL_ML silty clay
If soil contains 15 to 29% plus No. 200, add, "with sand" or " with gravel", whichever is predominent

[L] If soil contains ≥ 30% plus No.200, predominantly sand, add "sandy" to the group name

[M] If soil contains ≥ 30% plus No.200, predominantly gravel add "gravelly" to the group name

[N] PI ≥4 and plots on or above "A" Line

[O] PI < 4 or plots below "A" Line

[P] PI plots on or above "A" Line

[Q] PI plots below "A" Line

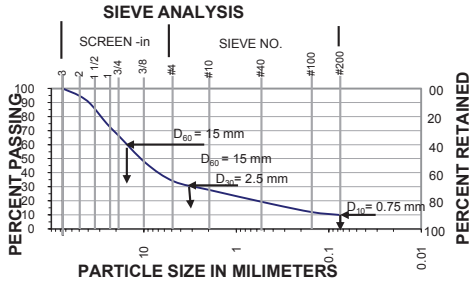


$Cu = \frac{D_{60}}{D_{10}} = \frac{15}{0.075} = 200$ $C_c = \frac{(D_{30})^2}{D_{60} X D_{10}} = \frac{(2.5)^2}{15X\ 0.075} = 5.6$

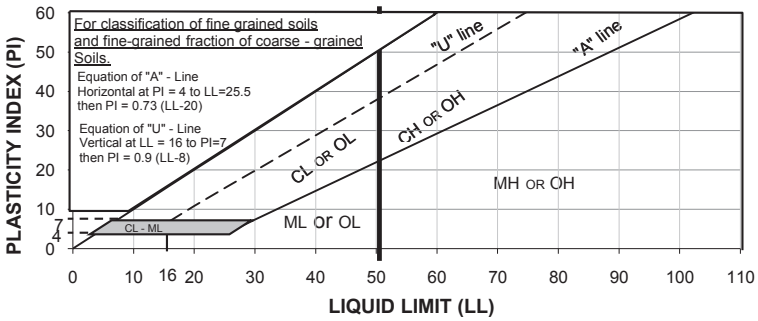


*Geotechnical -Structural- Pavement - Construction Materials*

**Midwest Drilled Foundations & Engineering, Inc.**

March 7, 2017

Greenfire Management Services, LLC
3215 W. State Street, Suite 200
Milwaukee, WI 53208

TeL: (414)-290-9400
FaX: (414)-345-9435

Attention: Mr. Mike Timmers (e-mail: Mike.Timmers@greenfire.com)
Senior Project Manager

Reference: The Barclay
300 S. Barclay Street
Milwaukee, WI 53204

Mike,

The geotechnical report from GESTRA is suitable for our purposes to provide a Design/Build Helical Pile proposal and design. It is our understanding that 25 kips is the maximum allowable design load. Regarding buckling concerns, there are 2 ways to handle this issue; (1) install a grout column as you drill to stiffen the shaft or (2) upsize the shaft section to eliminate/minimize critical buckling loads. I would have concerns about helical piles being viable if there is a lot of obstructions below grade (old foundations, large boulders etc.) but the soil borings did not show that to be the case.

Sincerely,
*MIDWEST DRILLED FOUNDATIONS & ENGINEERING, INC.*

Andrew G. Miller, PE
Senior Project Manager
Cell #: (609)-239-0103
E-Mail: amiller@midwestdfe.com

# APPENDIX II

## LABORATORY TEST RESULTS

**GESTRA Engineering, Inc**
191 W. Edgerton Ave
Milwaukee, WI 53207
Phone: (414) 933-7444; Fax: (414) 933-7844

# Laboratory Test Results of Moisture Content, Organic Content, and Density of Soil

| | | | |
|---|---|---|---|
| Project Name: | Barclay Development | Date: | February 8, 2017 |
| Project Number: | 17030-10 | Report To: | Key Engineering |
| Project Location: | Milwaukee, WI | | |
| ASTM Designation: | **D2216, D 2974** | | |

| Boring Number | GT-1 | GT-1 | GT-1 | GT-1 | GT-1 | GT-1 | GT-1 | GT-1 |
|---|---|---|---|---|---|---|---|---|
| Sample Number | 2 | 4 | 6 | 10 | 12 | 13 | 14 | 15 |
| Cup Number | Y21 | B7 | PC B | PC C | P21 | PC 105 | T7 | T5 |
| Weight of Cup (g) | 24.66 | 27.29 | 71.68 | 65.55 | 26.37 | 58.00 | 23.43 | 25.93 |
| Weight of Wet Soil and Cup (g) | 44.35 | 50.76 | 121.06 | 116.65 | 52.16 | 112.57 | 48.26 | 45.30 |
| Weight of Dry Soil and Cup (g) | 41.43 | 47.12 | 89.17 | 100.16 | 42.93 | 90.98 | 38.38 | 37.69 |
| Weight of Soil and Cup After Burn (g) | | | 80.86 | 99.00 | | 89.15 | | |
| Weight of Sample for Density (lbs) | | | | | 0.207 | | | |
| Diameter (in) | | | | | 1.423 | | | |
| Length(in) | | | | | 1.963 | | | |
| Moisture Content (%) | 17.4 | 18.4 | 182.3 | 47.6 | 55.7 | 65.5 | 66.1 | 64.7 |
| Organic Content (%) | | | 47.5 | 3.4 | | 5.5 | | |
| Wet Density (pcf) | | | | | 114.5 | | | |
| Dry Density (pcf) | | | | | 73.5 | | | |

| Boring Number | GT-1 | GT-1 | GT-1 | GT-1 | GT-1 | | | |
|---|---|---|---|---|---|---|---|---|
| Sample Number | 16 | 17 | 18 | 23 | 24 | | | |
| Cup Number | PC 704 | Q1 | B9 | B5 | M7 | | | |
| Weight of Cup (g) | 47.99 | 29.04 | 23.38 | 26.21 | 23.02 | | | |
| Weight of Wet Soil and Cup (g) | 100.23 | 51.03 | 48.39 | 51.58 | 46.84 | | | |
| Weight of Dry Soil and Cup (g) | 79.87 | 42.89 | 40.14 | 48.57 | 44.01 | | | |
| Weight of Soil and Cup After Burn (g) | 78.58 | | | | | | | |
| Weight of Sample for Density (lbs) | | | | 0.406 | | | | |
| Diameter (in) | | | | 1.491 | | | | |
| Length(in) | | | | 2.727 | | | | |
| Moisture Content (%) | 63.9 | 58.8 | 49.2 | 13.5 | 13.5 | | | |
| Organic Content (%) | 4.0 | | | | | | | |
| Wet Density (pcf) | | | | 147.3 | | | | |
| Dry Density (pcf) | | | | 129.8 | | | | |

Performed by B. Bills  Reviewed by E. Jeske

**GESTRA Engineering, Inc**
191 W. Edgerton Ave
Milwaukee, WI 53207
Phone: (414) 933-7444; Fax: (414) 933-7844

# Laboratory Test Results of
# Moisture Content, Organic Content, and Density of Soil

| | | | |
|---|---|---|---|
| Project Name: | Barclay Development | Date: | February 8, 2017 |
| Project Number: | 17030-10 | Report To: | Key Engineering |
| Project Location: | Milwaukee, WI | | |
| ASTM Designation: | **D2216, D 2974** | | |

| Boring Number | GT-2 | GT-2 | GT-2 | GT-2 | GT-2 | GT-2 | GT-2 | GT-2 |
|---|---|---|---|---|---|---|---|---|
| Sample Number | 3 | 5 | 6 | 7 | 10 | 12 | 14 | 15 |
| Cup Number | PC 104 | R1 | M4 | PC 705 | Z34 | PC 703 | PC 706 | Q7 |
| Weight of Cup (g) | 70.36 | 25.46 | 27.71 | 49.21 | 24.85 | 50.47 | 52.37 | 24.35 |
| Weight of Wet Soil and Cup (g) | 127.87 | 48.55 | 48.73 | 104.18 | 46.78 | 101.63 | 91.62 | 48.80 |
| Weight of Dry Soil and Cup (g) | 118.00 | 44.98 | 45.05 | 85.22 | 38.28 | 79.81 | 76.20 | 39.51 |
| Weight of Soil and Cup After Burn (g) | 117.39 | | | 83.17 | | 77.59 | 75.23 | |
| Weight of Sample for Density (lbs) | | | | | | | | |
| Diameter (in) | | | | | | | | |
| Length(in) | | | | | | | | |
| Moisture Content (%) | 20.7 | 18.3 | 21.2 | 52.7 | 63.3 | 74.4 | 64.7 | 61.3 |
| Organic Content (%) | 1.3 | | | 5.7 | | 7.6 | 4.1 | |
| Wet Density (pcf) | | | | | | | | |
| Dry Density (pcf) | | | | | | | | |

| Boring Number | GT-2 | GT-2 | GT-2 | GT-2 | GT-2 | GT-2 | | |
|---|---|---|---|---|---|---|---|---|
| Sample Number | 16 | 17 | 18 | 20 | 23 | 24 | | |
| Cup Number | M2 | PC 702 | Y10 | B10 | T4 | Q11 | | |
| Weight of Cup (g) | 26.97 | 48.39 | 24.92 | 24.47 | 24.21 | 24.87 | | |
| Weight of Wet Soil and Cup (g) | 49.74 | 98.77 | 45.39 | 53.13 | 44.52 | 48.79 | | |
| Weight of Dry Soil and Cup (g) | 41.28 | 78.87 | 38.09 | 46.74 | 40.53 | 44.39 | | |
| Weight of Soil and Cup After Burn (g) | | 77.06 | | | | | | |
| Weight of Sample for Density (lbs) | | 0.270 | | | | | | |
| Diameter (in) | | 1.47 | | | | | | |
| Length(in) | | 2.784 | | | | | | |
| Moisture Content (%) | 59.1 | 65.3 | 55.4 | 28.7 | 24.4 | 22.5 | | |
| Organic Content (%) | | 5.9 | | | | | | |
| Wet Density (pcf) | | 98.7 | | | | | | |
| Dry Density (pcf) | | 59.7 | | | | | | |

Performed by B. Bills  Reviewed by E. Jeske

**GESTRA Engineering, Inc**
191 W. Edgerton Ave
Milwaukee, WI 53207
Phone: (414) 933-7444; Fax: (414) 933-7844

# Laboratory Test Results of Atterberg Limits of Soil

| | | | |
|---|---|---|---|
| Project Name: | Barclay Development | Date: | February 13, 2017 |
| Project Number: | 17038-60 | Client: | Key Engineering |
| Project Location: | Milwaukee, WI | | |
| ASTM Designation: | **D4318** | | |

## Sample Information

| | |
|---|---|
| Type of Sample | Split Spoon |
| Boring Number | GT-2 |
| Sample Number | 17 |
| Depth of Sample | 64.5'-66' |

## Determination of Liquid Limit

| Cup Number | D8 | D10 | D12 |
|---|---|---|---|
| Weight of Cup (g) | 14.25 | 14.81 | 14.49 |
| Weight of Wet Soil and Cup (g) | 37.52 | 34.96 | 35.62 |
| Weight of Dry Soil and Cup (g) | 28.61 | 27.12 | 27.20 |
| Moisture Content (%) | 62.0 | 63.7 | 66.2 |
| Blow Counts | 34 | 26 | 16 |

## Determination of Plastic Limit

| Cup Number | D27 | D2 |
|---|---|---|
| Weight of Cup (g) | 7.17 | 7.23 |
| Weight of Wet Soil and Cup (g) | 13.73 | 13.46 |
| Weight of Dry Soil and Cup (g) | 12.02 | 11.82 |
| Moisture Content (%) | 35.3 | 35.7 |

## Compilation of Test Results

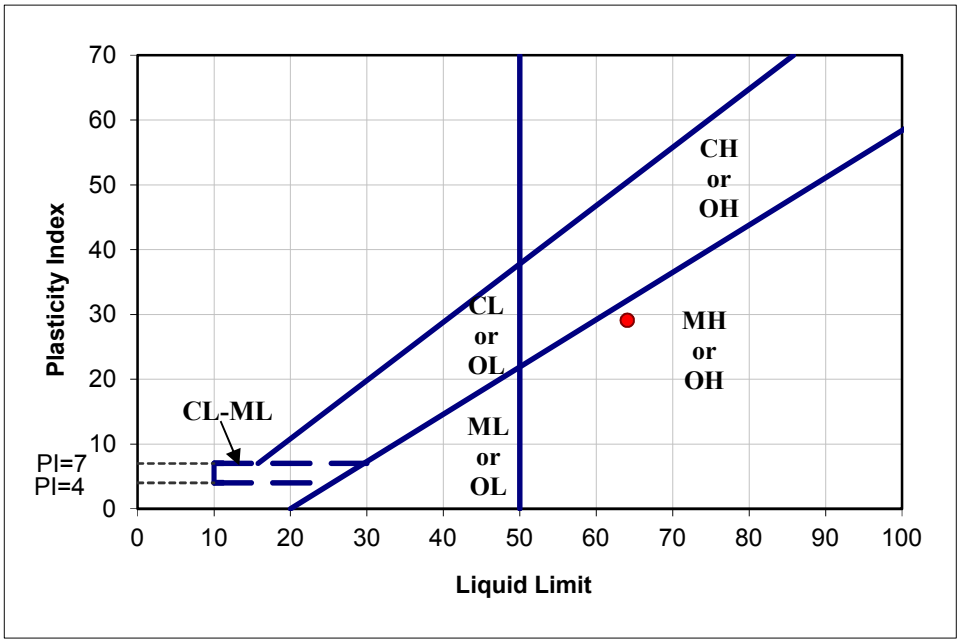


| | |
|---|---|
| Liquid Limit | 64 |
| Plastic Limit | 35 |
| Plasticity Index | 29 |
| USCS Symbol | **MH** |

Performed by: BJB

Reviewed By: E. Jeske
GESTRA Engineering, Inc.

**GESTRA Engineering, Inc**
191 W. Edgerton Ave
Milwaukee, WI 53207
Phone: (414) 933-7444, Fax: (414) 933-7844

# Laboratory Test Results of Unconfined Compressive Strength of Soil

| | | | |
|---|---|---|---|
| Project Name: | Barclay Development | Date: | February 10, 2017 |
| Project Number: | 17030-10 | Report To: | Key Engineering |
| Project Location: | Milwaukee, WI | | Due Calibration: 06/2017 |
| ASTM Designation: | **D2166** | | Form Updated on 7/1/2016 |

## Test Data

| Deformation dial reading (0.001 in.) | Sample stress (psf) |
|---|---|
| 0 | 0 |
| 20 | 0 |
| 40 | 69 |
| 60 | 206 |
| 80 | 273 |
| 100 | 338 |
| 150 | 531 |
| 200 | 911 |
| 250 | 1276 |
| 300 | 1438 |
| 350 | 1653 |
| 400 | 1799 |
| 409 | 1851 |

## Sample Information

| | | | |
|---|---|---|---|
| Boring no.: | GT-1 | Diameter (in) | 1.49 |
| Sample no.: | 23 | Area (sq. in.): | 1.75 |
| Depth of Soil: | 94.5'-96' | Height: (in.): | 2.73 |
| Description of Soil: | LEAN CLAY, gray, moist | | |
| Strain Rate (in/min): | 0.050 | | |

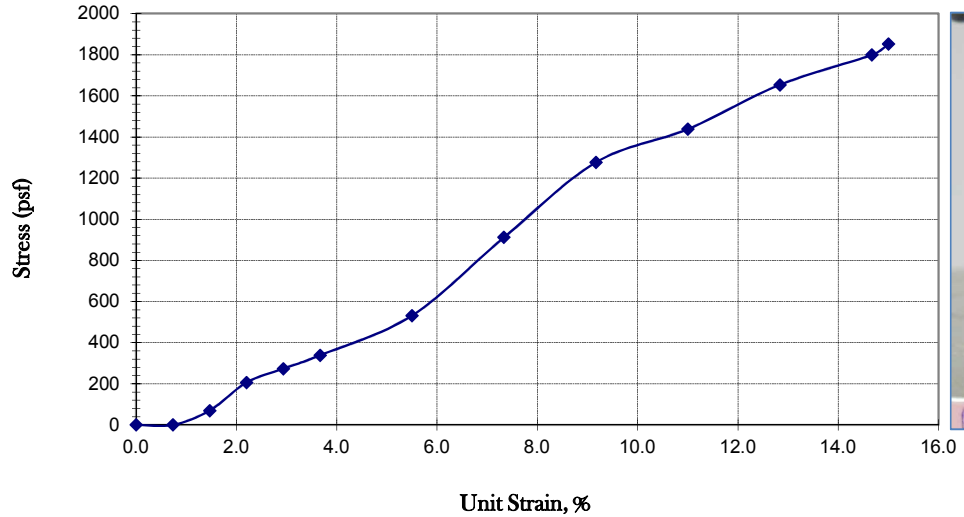

| | |
|---|---|
| UC Strength, $Q_u$ (tsf) | **0.9** |
| Wet Density (pcf) | 147.3 |
| Dry Density (pcf) | 129.8 |
| Moisture Content (%) | 13.5 |

**Remarks**

Performed By: BJB

Reviewed By: E. Jeske, PE
GESTRA Engineering, Inc.