Final 11/20/92

US EPA RECORDS CENTER REGION 5
484374
923330

UNITED STATES ENVIRONMENTAL PROTECTION AGENCY
REGION V
SITE SAFETY PLAN

Date: January 03, 1995

Project Name: MCC Construction
2100 South Kostner
Chicago, Illinois

ERCS Delivery Order #:

TAT Technical Direction Document #: T05-9412-008

U.S. EPA Site I.D.#: 0.D.

ERCS Job #:

Adopted By: _____ Date: 1/4/95
ERCS Response Manager

Adopted By: _____ Date: 1/4/95
E & E Lead TAT Member

Adopted By: _____ Date: 1-4-95
U.S. EPA On-Scene Coordinator

Adopted By: _____ Date: 1/4/95
ERCS Safety Manager

Adopted By: _____ Date: 1/4/95
E & E Safety Officer

UNITED STATES ENVIRONMENTAL PROTECTION AGENCY
REGION V
SITE SAFETY PLAN

Date: January 03, 1995

Project Name: MCC Construction
2100 South Kostner
Chicago, Illinois

ERCS Delivery Order #:

TAT Technical Direction Document #: T05-9412-008

U.S. EPA Site I.D.#: O.D.

ERCS Job #:

Adopted By: _____ Date: 1/4/95
ERCS Response Manager

Adopted By: _____ Date: 1/4/95
E & E Lead TAT Member

Adopted By: _____ Date: 1-4-95
U.S. EPA On-Scene Coordinator

Adopted By: _____ Date: 1/4/95
ERCS Safety Manager

Adopted By: _____ Date: 1/4/95
E & E Safety Officer

TABLE OF CONTENTS

		PAGE
INTRODUCTION AND SITE ENTRY REQUIREMENTS		7
1.0	SITE BACKGROUND AND SCOPE OF WORK	8
1.1	Roles and Responsibilities	8
1.2	Key Personnel	10
1.3	Site Background	11
1.4	Scope of Work for ERCS	11
1.5	Scope of Work for TAT	11
2.0	TASK SAFETY AND HEALTH RISK ANALYSES	12
2.1	Task Specific Hazards and Controls	12
2.2	Chemical Hazards	16
2.3	Physical Hazards	18
3.0	PERSONNEL TRAINING	24
4.0	PERSONAL PROTECTIVE EQUIPMENT	25
4.1	Level A	25
4.2	Level B	26
4.3	Level C	26
4.4	Level D	27
4.5	Decision to Upgrade/Downgrade PPE	28
5.0	MEDICAL MONITORING REQUIREMENTS	28
5.1	Pre-employment Physical	28
5.2	Site Specific Physical Examination	28
5.3	Annual Physical Exam	28
5.4	Accidental/Suspected Exposure Physical	28
5.5	Contractor Physical Examination Requirements	28
5.6	Site Documentation	29
6.0	AIR MONITORING AND ACTION LEVELS	29
6.1	Routine Air Monitoring Requirements	29
6.2	Site Specific Air Monitoring Requirements	30
6.3	Personnel/Monitoring	30
6.4	Noise Monitoring	30
6.5	Heat Stress Monitoring	30
6.6	Other	31
6.7	Names of Monitoring Technicians	31
6.8	Location of Monitoring Records	31

recycled paper
ecology and environment

TABLE OF CONTENTS (cont'd)

PAGE

7.0 SITE CONTROL AND STANDARD OPERATING PROCEDURES 31

7.1 Work Zones 31
7.2 General Field Safety Rules 32

8.0 DECONTAMINATION PROCEDURES 34

8.1 Procedures for Equipment Decontamination 34
8.2 Procedures for Personnel Decontamination 34
8.3 Emergency Decontamination 35
8.4 Decontamination Equipment Required 35
8.5 Disposition of Decontamination Wastes 35

9.0 HAZARD COMMUNICATION 36

9.1 Material Safety Data Sheets 36
9.2 Container Labeling 36
9.3 Chemicals Brought to Site 36
9.4 Employee Training and Information 36

10.0 EMERGENCIES/ACCIDENTS/INJURIES 37

10.1 Emergency Contacts 37
10.2 Additional Emergency Numbers 38
10.3 Emergency Equipment Available On-Site 39
10.4 Accident Reporting/Investigations 39

11.0 EMERGENCY RESPONSE CONTINGENCY PLAN 40

11.1 Personnel Responsibilities 40
11.2 Medical Emergencies 41
11.3 Fire or Explosion 41
11.4 Spills, Leaks, or Releases 41
11.5 Evacuation Routes 42

12.0 CONFINED SPACE 43

MANDATORY ATTACHMENTS

- ATTACHMENT A SITE SAFETY PLAN AMENDMENTS
- ATTACHMENT B SITE MAPS
- ATTACHMENT C CHEMICAL HAZARD INFORMATION
- ATTACHMENT D PERSONAL PROTECTION EQUIPMENT AND RESPIRATORY PROTECTION SOP'S
- ATTACHMENT E DRUG AND ALCOHOL PROCEDURES
- ATTACHMENT F ACCIDENT REPORTING/INVESTIGATION
- ATTACHMENT Z SITE SAFETY PLAN ACKNOWLEDGMENT FORM

OPTIONAL ATTACHMENTS
HAZARDS AND SOPS ASSOCIATED WITH:

G OSHA Guidance and Regulations

H Confined Space

I Drum Handling

J Drum Sampling

K Opening Drums and Overpacks

L Drum Staging and Overpacking

___ Drum Excavation

M Empty Drum Crushing

___ Drill Rig

N Site Walkthroughs/Entry

___ Housekeeping and Material Storage

O Hazardous Waste Storage

___ Demolition

P Working Around Heavy Equipment

Q General Heavy Equipment Operations

recycled paper
ecology and environment

OPTIONAL ATTACHMENTS (cont'd)
HAZARDS AND SOPS ASSOCIATED WITH:

___ Excavation

_R_ Truck Loading

___ Soil Sampling

_S_ Liquid Sampling

_T_ Compatibility Testing and Compositing of Samples

___ Lab Packing and Lab Inventory

_U_ Flammable/Combustible Liquid Transfer

___ Corrosive Liquid Transfer

___ Use of High Pressure Water Cleanup

___ Use of a High Pressure Water Cleaner in Vats

___ Compressed Gas Cylinders

___ Heat Stress

_V_ Cold Stress

___ Electrical Safety

___ Traffic Control

___ Fire Prevention and Protection

___ Work from Elevated Surfaces

___ Cranes

___ Rigging

___ Lockout/Tagout

___ Welding/Cutting/Grinding

___ Other: _____

recycled paper
ecology and environment

GLOSSARY OF ACRONYMS

ANSI	- AMERICAN NATIONAL STANDARDS INSTITUTE
APR	- AIR PURIFYING RESPIRATOR
ACGIH	- AMERICAN CONFERENCE OF GOVERNMENTAL INDUSTRIAL HYGIENISTS
CFR	- CODE OF FEDERAL REGULATIONS
CGI	- COMBUSTIBLE GAS INDICATOR
CLEAN ZONE	- SUPPORT ZONE
CSEP	- CONFINED SPACE ENTRY PERMIT
DECON	- DECONTAMINATION
ERCS	- EMERGENCY RESPONSE CLEAN-UP SERVICES
HNU-PID	- HNU PHOTOIONIZATION DETECTOR
HOT ZONE	- EXCLUSION ZONE
IAW	- IN ACCORDANCE WITH
IDLH	- IMMEDIATELY DANGEROUS TO LIFE & HEALTH
MREM/hr	- MILLI-ROENTGENS EQUIVALENT IN MAN PER HOUR
NIOSH	- NATIONAL INSTITUTE FOR OCCUPATIONAL SAFETY & HEALTH
OSC	- ON-SCENE COORDINATOR
OSHA	- OCCUPATIONAL SAFETY AND HEALTH ADMINISTRATION LIMIT
OVA	- ORGANIC VAPOR ANALYZER
PAPR	- POWERED AIR PURIFYING RESPIRATORS
PEL	- PERMISSIBLE EXPOSURE LIMIT
PPM	- PARTS PER MILLION
RES	- RIEDEL ENVIRONMENTAL SERVICES, INC.
RM	- RESPONSE MANAGER
SCBA	- SELF-CONTAINED BREATHING APPARATUS
SOP	- STANDARD OPERATING PROCEDURE
SPCC	- SPILL PREVENTION CONTROLS & COUNTERMEASURES
TAT	- TECHNICAL ASSISTANCE TEAM
TLV	- THRESHOLD LIMIT VALUE
TWA	- TIME WEIGHTED AVERAGE
U.S. EPA	- U.S. ENVIRONMENTAL PROTECTION AGENCY

INTRODUCTION AND SITE ENTRY REQUIREMENTS

This document describes the health and safety guidelines developed for the **MCC Construction Site** site, to protect on-site personnel, visitors, and the public from physical harm and exposure to hazardous materials or wastes. The procedures and guidelines contained herein were based upon the best available information at the time of the plan's preparation. Specific requirements will be revised when new information is received or conditions change. A written amendment will document all changes made to the plan. Any amendments to this plan will be included in Attachment A. Where appropriate, specific OSHA standards or other guidance will be cited and applied.

All work practices and procedures implemented on site must be designated to minimize worker contact with hazardous materials and to reduce the possibility of physical injury. All work will be performed in accordance with applicable Federal 29CFR 1910 and 1926 Health and Safety Regulations and the Federal 29CFR 1910.120 Hazardous Waste Site Safety Regulations. The States of Indiana, Michigan and Minnesota are State OSHA states and their regulations will be followed as applicable.

DAILY SAFETY MEETINGS

Daily safety meetings will be held at the start of each shift to ensure that all personnel understand site conditions and operating procedures, to ensure that personal protective equipment is being used correctly and to address worker health and safety concerns.

SITE SAFETY PLAN ACCEPTANCE ACKNOWLEDGMENT

The OSC or designated representative shall be responsible for informing all individuals entering the exclusion zone or decontamination zone of the contents of this plan and ensuring that each person signs the Safety Plan Acknowledgment Form in Attachment Z. By signing the Safety Plan Acknowledgment Form, individuals are recognizing the potential hazards present on-site and the policies and procedures required to minimize exposure or adverse effects of these hazards.

1.0 SITE BACKGROUND AND SCOPE OF WORK

1.1 ROLES AND RESPONSIBILITIES

On-Scene Coordinator (OSC):

The OSC, as the representative of the U.S. EPA, is responsible for overall project administration and for coordinating health and safety standards for all individuals on-site at all times. All U.S. EPA and contractors health and safety guidelines and requirements as well as all applicable OSHA standards shall be applied. The OSC is the overall site safety officer and will be responsible for the health and safety of on-site visitors. However, each contractor (as an employer under OSHA) is also responsible for the health and safety of its employees. If there is any dispute with regards to health and safety, the following procedures shall be followed:

1) Attempt to resolve the issue on-site; and,
2) If the issue cannot be resolved, on-site personnel shall consult off-site health and safety personnel for assistance and the specific task operation in dispute shall be discontinued until the issue is resolved.

Response Manager (RM):

The Response Manager, as the field representative for the ERCS clean-up contractor, has the responsibility for fulfilling the terms of the delivery order. The RM must oversee the project and ensure that all technical, regulatory and safety requirements are met. It is the RM's responsibility to communicate with the OSC as frequently as dictated by the OSC, but at least daily, regarding site clean-up progress and any problems encountered.

Technical Assistance Team (TAT):

The Technical Assistance Team is responsible for providing the OSC with assistance and support in regards to all technical, regulatory and safety aspects of site activity. The TAT is also available to advise the OSC on matters relating to sampling, treatment, packaging, labeling, compatibility, transport, and disposal of hazardous materials, but is not limited to the above-mentioned.

Site Health and Safety Officer (HSO):

The ERCS and TAT Site Safety Officers will be assigned to the site on a full-time basis with functional responsibility for implementing the Site Health and Safety Plan as it applies to ERCS and TAT personnel. The Response Manager is the designated ERCS HSO. The Lead TAT Member is the designated TAT HSO unless otherwise appointed. Site audits may be conducted by the ERCS Health and Safety manager, TAT personnel and/or the U.S. EPA.

Specific Duties Include:

a. Assume responsibility for health and safety of ERCS and/or TAT personnel.
b. Supervise confined space entries.
c. Document safety problems.
d. Supervise decontamination of personnel and equipment.
e. Ensure that monitoring equipment is calibrated/operational.
f. Conduct personal air monitoring on all ERCS and/or TAT employees as outlined in 29CFR 1910.120(h)(4).
g. Perform respiratory fit tests.
h. Inventory/inspect PPE prior to personnel entries.
i. Prepare summary letter of personal air sampling results.
j. Select protective equipment levels based upon chemical properties, method of contact and air sample results.
k. Prepare and maintain OSHA Log within 3 days of accident.
l. Insure all ERCS and/or TAT personnel are fit for duty.
m. Competent person for excavation/trench entry jobs.
n. Inspect first aid kits/fire extinguishers/SCBA.

Other:

Any persons who observe safety problems should immediately report observations/concerns to appropriate key personnel listed in Section 1.2.

1.2 Key Personnel

U.S. EPA On-Scene Coordinator (OSC)/ Site Safety Officer:	Brad Stimple U.S EPA - Region V 77 West Jackson Blvd Chicago, Illinois 60604
Alternate OSCs:	_____
Principle ERCS Contractor:	Riedel Environmental Services Bensenville, Illinois (708) 238-1818
Response Manager (RM):	Mark Parquette - RES Chicago
Subcontractors:	None
ERCS Health & Safety Officer:	Alan Frank
TAT Health & Safety Officer:	Karen Rydzewski
Technical Assistance Team (TAT):	Ecology & Environment, Inc. 111 West Jackson Blvd. Chicago, Illinois 60604 312/663-9415
TAT Representatives:	Karen Rydzewski Donovan Robin

1.3 Site Background

The MCC Construction (MCC) Site is a parcel of land previously operated by a construction company. Currently the site is utilized illegally as an open dump. Approximately 22 drums containing paint waste paint have been abandoned at the site. Nineteen of the 22 drums are scattered in the southeast portion of the property. The remaining three drums are located in a semi-trailer on the northeast portion of the site. Construction debris including, metal, wood, concrete, etc. is scattered throughout the entire site. A perimeter fence surrounds the property.

The U.S. EPA and TAT conducted a site assessment at the MCC site in November 1994, and collected drum samples. Analytical results revealed the material in the drums contain elevated of methyl ethyl ketone, toluene, ethyl benzene, xylene, acetone, naphthalene, and lead. In addition, all three drum samples collected exhibited flashpoints below the RCRA regulatory limit for ignitibility of 140°F. A sample was also collected from a construction/debris pile located on site. No elevated concentrations of hazardous constituents were detected.

1.4 Scope of Work for ERCS Contractor

1. Prepare and implement a Site Health and Safety Plan.
2. Drum inspection and inventory
2. Conduct drum sampling, overpacking, and staging.
3. Assist with hazardous categorization testing of drum samples.
4. Subcontract transportation and disposal of 22 drums.
5. Complete drum sampling logs.

1.5 Scope of Work for TAT

1. Prepare and implement a Site Health and Safety Plan.
2. Conduct oversight of on-site activities and U.S. EPA contractors.
3. Conduct hazardous categorization and compatibility/bulk testing on drum samples.
4. Assit with drum sampling.
5. Maintain CERCLA paperwork.
6. Conduct air monitoring during on-site activities.
7. Prepare draft After-action Report.

2.0 TASK SAFETY AND HEALTH RISK ANALYSIS

2.1 Task Specific Hazards and Controls

This section is to be addressed in the daily tool box safety meeting as each task is to be attempted. Each Task-Specific Safety Assessment is designed to develop awareness to chemical and physical hazards specific to each task. It would be impractical to repeat in complete detail each control measure and SOP for each job task. Sources and Hazards will be addressed for each job task with reference made to applicable control measures in Sections 2.2, 2.3 and SOP's. The tables in Section 2.2 and 2.3 should be posted in the break area and command post. When the Task-Specific Safety Assessment are discussed additional hazards may need to be addressed.

TASK SPECIFIC SAFETY ASSESSMENT

JOB TASK: Site walkthrough and air monitoring

PERSONAL PROTECTIVE EQUIPMENT: Level C/D

HAZARD	SOURCES	CONTROL MEASURES	REF.
Slip, trip, fall	Scattered debris, terrain		
Cold Stress	Weather		
Biological			

TASK SPECIFIC SAFETY ASSESSMENT

JOB TASK: Drum overpacking and staging

PERSONAL PROTECTIVE EQUIPMENT: Level B/C/D

HAZARD	SOURCES	CONTROL MEASURES	REF.
Drum handling	Drums	Watch for pinch points. Use mechanical devices whenever possible.	
Contaminant exposure	Drum contents	wear appropriate PPE. Monitor work areas for organic vapors and LEL	
		Downgrading to modified level D is permitted if air monitoring is $\leq$ BKGND	

TASK SPECIFIC SAFETY ASSESSMENT

JOB TASK: Drum Opening & Sampling

PERSONAL PROTECTIVE EQUIPMENT: Level B

HAZARD	SOURCES	CONTROL MEASURES	REF.
Contaminant exposure	Drum Contents	Proper PPE. Avoid contact w/ liquids. Inspect breathing equipment prior to use (cold weather may restrict the equipment). Have spill controls readily available.	
Flammable Atmosphere	Drum Contents	Use sparkproof tools. Monitor work area for % LEL periodically. Use caution around bulging drums. Use mechanical equipment to depressurize, if necessary.	
Cold Stress	Weather Conditions	Take heated breaks as necessary. Wear layered clothing.	
Drum Handling	Drums & Handling Equipment	Beware of pinch points. Use mechanical devices during handling. Wear proper PPE. Stay upwind during sampling procedures.	

TASK SPECIFIC SAFETY ASSESSMENT

JOB TASK: Hazardous categorization and bulk testing

PERSONAL PROTECTIVE EQUIPMENT: Level D with fume hoods

HAZARD	SOURCES	CONTROL MEASURES	REF.
Contaminant Explosure	drum contents	Wear proper PPE and have spill control readily available. Have HAZCATing procedures performed under a fume hood.	

TASK SPECIFIC SAFETY ASSESSMENT

JOB TASK: Site Preparation

PERSONAL PROTECTIVE EQUIPMENT: Level D Modified

HAZARD	SOURCES	CONTROL MEASURES	REF.
Heavy Lifting	Unloading Equipment and moving debris	Utilize the Buddy system & work in teams. No individuals lifting > 75 lbs	
Trip & Fall	Site Debris	Clear debris in work areas. Use caution while walking, wear proper PPE.	
Contaminant Exposure	Debris	Wear proper PPE. Watch sharp edges and wear leather gloves if possible to minimize punctures and cuts.	

TASK SPECIFIC SAFETY ASSESSMENT

JOB TASK: Drum Inspection and Overpacking

PERSONAL PROTECTIVE EQUIPMENT: Level B/C PPE

HAZARD	SOURCES	CONTROL MEASURES	REF.
Contaminant Exposure	Drum Contents	Wear Proper PPE, If drums are to be handled, have spill controls readily available. Perform air monitoring during handling and upgrade if necessary.	
Drum Handling	Drums & Handling Equipment	Beware of pinch points, buddy system	
Slip/Trip/Fall	Uneven terrain, Ice, and Snow	Keep work area clear of unnecessary debris and organize area.	
Spill Control	Drums	Have spill control equipment readily available.	

TASK SPECIFIC SAFETY ASSESSMENT

JOB TASK:			
PERSONAL PROTECTIVE EQUIPMENT:			
HAZARD	SOURCES	CONTROL MEASURES	REF.

TASK SPECIFIC SAFETY ASSESSMENT

JOB TASK:			
PERSONAL PROTECTIVE EQUIPMENT:			
HAZARD	SOURCES	CONTROL MEASURES	REF.

recycled paper

2.2 Chemical Hazards

CHEMICAL	TLV/PEL/ IDLH	Physical Characteristics	Odor Threshold	Routes of Exposure	PPE Polymers	Symptoms Acute/Chronic	First Aid
Lead	0.1 mg/m3 700 mg/m3	Metal, soft grayish solid	na	Inhal, Ing, Contact		Weak,lass, insom, abdom pain	Eye-Irr immed Skin-Soap flush
Methyl Ethyl Ketone	200 ppm 3000 ppm	Clear liquid	Mint acetone like odor	Inhal, Ing, Contact		Irrit eye, nose, thrt & hdaches, vomit	Eye-Irr immed Skin-Soap wash Breath-Med att: Swallow-Med att
Ethyl benzene	100 ppm 2000 ppm	Colorless liq.	aromatic odor	Inhal, Ing, Contact		Irrit eye, nose, thrt, hdaches, vmt	Eye-Irr immed Skin-Soap wash Breath-Med att: Swallow-Med att
Toluene	100 ppm 2000 ppm	Colorless liq.	aromatic odor	Inhal, Ing, Contact		Irrit eye, nose, thrt, hdaches, vmt	Eye-Irr immed Skin-Soap wash Breath-Med att: Swallow-Med att
Xylene	100 ppm 2000 ppm	Colorless liq.	aromatic odor	Inhal, Ing, Contact		Irrit eye, nose, thrt, hdaches, vmt	Eye-Irr immed Skin-Soap wash Breath-Med att: Swallow-Med att

ecology and environment

Acetone	100 ppm 2000 ppm	Colorless liq.	aromatic odor	Inhal, Ing, Contact		Irrit eye, nose, thrt, hdaches, vmt	Eye-Irr immed Skin-Soap wash Breath-Med att: Swallow-Med att
Naphthalene	10 ppm 500 ppm	Colorless to brown solid	mothball odor	Inhal, Ing, Contact		Eye Irrit, head, conf.,excitement mal, nau, vmt, abdom pain, irrit bladder,	Eye-Irr immed Skin-flush Swallow- Med att:
Barium	0.5 mg/m3 1100 mg/m3	White Solid	na	Inhal, Ing, Contact		upper resp irrit, gastroint., mucs, spasm, slow pulse, skin burns	Eye-Irr immed Skin- Wash immed
Chromium	1 mg/m3 N.E.	blue-white to steel gray	na	Inhal, Ing,		Histologic fibrosis lungs	Eye- Irr immed Skin-Wash
Bis(2-ethylhexyl) phthalate	5 mg/m3 IDLH UNK (CA)	COLORLESS OILY LIQUID		INHAL, INGL, CONTACT		IRRIT EYES + MUCOUS MEMB.	EYE IRR IMMED. RESP SUPPORT.
Di-n-butyl phthalate							

The above listing should not be taken as a complete assessment of the hazards posed by materials at MCC Site. The known and unknown mixed chemical hazards at this site prevent a clear determination of the specific effects of discrete compounds. Therefore, personnel must be alert for symptoms of possible exposure such as unusual smells, stinging, burning eyes, nose and throat, skin irritation, as well as feeling extremely well, depressed, sleepy or tired. Symptoms must be immediately reported to the site supervisor.
See Attachment C for Chemical Hazard Information and MSDS'.

recycled paper
ecology and environment

2.3 Physical Hazards

PHYSICAL/ENVIRONMENTAL HAZARD ANALYSIS

HAZARD	PRE PLANNING TO CONTROL HAZARD	ACTIVE CONTROL MEASURES
Cold Stress	1. Anticipate possible low temperatures (winter months). 2. Remember the temperature does not have to be below freezing to have a cold stress situation.	1. Warm break area. 2. Warm decaffeinated drinks. 3. Buddy system/awareness. 4. First aid on site. 5. Medical care if symptoms persist.
Electrical	1. Locate and mark existing energized lines. 2. De-energize lines if necessary to perform work safely. 3. All electrical circuits will be grounded. 4. All 120 volt single phase which are not a part of the permanent wiring will have a ground-fault interrupter in place. 5. Temporary wiring will be guarded, buried or isolated by elevation to prevent accidental contact by personnel or equipment. 6. Evaluate potential for high moisture/standing water areas and define special electrical wiring needs-typically requirement for low voltage lighting systems.	
Ergonomic	1. All operations evaluated for ergonomic impact. 2. Procedures written to define limits of lifting, pulling, etc. 3. Procedures to define how personnel will utilize proper ergonomic concepts and utilize mechanical material handling equipment. 4. Necessary mechanical material handling equipment specified and ordered for project.	1. Proper body mechanics techniques stressed and enforced on a daily basis. 2. Mechanical handling equipment maintained and utilized. 3. Proper body mechanics stressed in scheduled safety meetings. 4. Injuries reported and medically treated if in doubt about severity. 5. Operations changed as necessary based on injury experience or potential.

recycled paper
ecology and environment

PHYSICAL/ENVIRONMENTAL HAZARD ANALYSIS

HAZARD	PRE PLANNING TO CONTROL HAZARD	ACTIVE CONTROL MEASURES
Existing Site Topography	1. Survey site prior to layout. Identify areas unsafe for personnel or equipment due to physical conditions. 2. Identify/locate existing utilities. 3. Determine impact of site operations on surrounding properties, communities, etc. 4. Identify mechanized equipment routes both on site and onto and off the site. 5. Layout site into exclusion and contamination reduction zones based on initial site evaluation.	1. Awareness to work environment - regular inspection/audits to identify changing conditions. 2. Shut down operations when unknown conditions encountered.
Fires & Explosions	1. Evaluate all operations for fire and explosion potential. 2. Define specific procedures for unique operations presenting unusual hazard such as flammable tank demolition. 3. Ensure that properly trained personnel and specialized equipment is available. 4. Define requirements for handling and storage of flammable liquids on site, need for hot work permits and procedures to follow in the event of fire or explosion. 5. Define the type and quantity of fire suppression equipment needed on site. 6. Coordinate which local fire fighting agencies to discuss unique fire hazards, hazardous materials, etc. 7. Ensure site operations comply with 29CFR 1910.157G.	1. Inspect fire suppression equipment on a regular basis. 2. Store flammables away from oxidizers and corrosives. 3. Utilize Hot Work Permit for all hot work on site. 4. Follow any site specific procedures regarding work around flammables. 5. Review and practice contingency plans. Discuss on regular basis at scheduled safety meetings.

recycled paper

ecology and environment

PHYSICAL/ENVIRONMENTAL HAZARD ANALYSIS

HAZARD	PRE PLANNING TO CONTROL HAZARD	ACTIVE CONTROL MEASURES
Flammable Vapor and Gases	1. Evaluate site to determine sources of likely flammable gas or vapor generation. 2. Develop specific procedures to be followed in the event of exposure to flammables. 3. Specify specialized equipment needs for inerting flammable atmospheres, ventilating spaces and monitoring flammable vapor concentrations. 4. Define requirements for intrinsically safe equipment. 5. Develop contingency plan to follow in the event of fire or explosion.	1. Calibrated monitoring equipment available and utilized by trained personnel whenever working where flammable gas or vapor is present. 2. Monitoring performed at regular frequency and in all areas where vapor could generate or pool. 3. Equipment and operations shut down when threshold levels are exceeded. 4. Contingency plans reviewed regularly by all involved personnel. 5. Work areas are carefully inspected to look for possible ignition sources. Sources are removed. 6. Operations shut down if specific task procedures can't be followed to the letter.
Heat Stress	1. Anticipate possible elevated temperatures (summer months). 2. Awareness to stress placed on body by specific PPE. 3. Awareness to levels of heat stress symptoms.	1. Proper work/rest schedule and monitoring. 2. Drink plenty of fluids. 3. Buddy system/awareness. 4. First aid on site. 5. Medical care if symptoms persist.
Heavy Equipment Operation	1. Define equipment routes and traffic patterns for site. 2. Insure that operators are properly trained on equipment operation for all equipment required on project. 3. Define safety equipment requirements, including back up alarm and roll over, for all equipment on site. 4. Define equipment routes and traffic patterns for site. 5. Implement SOP of requiring operators to safety inspect equipment on a daily basis in accordance with manufacturer requirements. 6. Evaluate project requirements to ensure that equipment of adequate capacity is specified.	1. Equipment inspected as required. Equipment repaired or taken out of service. 2. Ground spotters are assigned to work with equipment operators. Utilize standard hand signals and communication protocols. 3. Personnel wear the proper PPE, utilize hearing protection, gloves for handling rigging, etc. 4. Equipment safety procedures discussed at daily scheduled safety meetings. 5. Personnel do not exceed lifting capacities, load limits, etc. for equipment in question. 6. Personnel follow basic SOP's which prohibit passengers on equipment, activating brakes and grounding buckets, securing loads prior to movement, etc.

recycled paper
ecology and environment

PHYSICAL/ENVIRONMENTAL HAZARD ANALYSIS

HAZARD	PRE PLANNING TO CONTROL HAZARD	ACTIVE CONTROL MEASURES
Illumination	1. Evaluate all operations and work areas to determine lighting requirements. 2. Specify specialized lighting requirements including explosion proof, intrinsically safe, lighting needs. 3. Determine if nighttime outdoor operations are necessary. Evaluate tasks to be performed and number of light plants necessary to allow operations. 4. Ascertain if outdoor lighting from nighttime operations will have an impact on surrounding communities.	1. Inspect specialized equipment and discard or replace as needed. 2. Add additional lighting to areas with lighting deficiencies. 3. Inspect drop cords and portable lights on regular basis. Replace or repair as necessary.
Noise	1. Local community noise standards examined. 2. Expected loud operations evaluated to determine compliance with community standards. 3. Loud operations scheduled for approved time periods. 4. Noise level standards established for equipment brought onto site. 5. Hearing protection requirements defined for personnel expected to have excessive exposures.	1. Personnel receive annual audiogram. 2. Personnel required to wear hearing protection. 3. Routine noise level monitoring and dosimetry performed. 4. Defective equipment repaired as needed. 5. Ongoing hearing conservation education promoted at scheduled safety meetings. 6. Medical evaluation following noise (impact) exposure if symptoms present themselves.
Personal Injuries	1. Site operations will be evaluated for exposures with serious injury potential such as falling objects, pinch points, flying objects, falls from elevated surfaces, etc. 2. A written Fall Prevention Program will be developed if workers will be required to work at heights greater than 10 feet from unguarded work locations. 3. PPE requirements will be based on potential for injury.	1. Personnel will wear required PPE. 2. Specialized equipment such as rope grabs, winches, etc. will be inspected prior to each use. Defective equipment will be immediately replaced. 3. All injury and near miss incidents will be reported to the HSO. 4. First aid/CPR trained person on site at all times. 5. All injuries will be treated on site with advanced medical treatment being sought if doubt about severity.
Radiation	1. Evaluate potential for exposure to radioactive materials. 2. If likely, develop specialized training program for personnel. 3. Develop plan and specify equipment for monitoring potential radiation sources. 4. Establish health physics dosimetry program. 5. If not likely, implement SOP of stopping work should any sign of radioactive materials become apparent.	1. Perform monitoring as defined in safety plan. 2. Perform necessary calibration and maintenance on monitoring equipment. 3. Employees participate in health physics monitoring program. 4. Notify Project Manager when suspect materials are detected.

recycled paper
ecology and environment

PHYSICAL/ENVIRONMENTAL HAZARD ANALYSIS

HAZARD	PRE PLANNING TO CONTROL HAZARD	ACTIVE CONTROL MEASURES
Small Equipment Usage	1. Site operations evaluated to determine need for specialized intrinsically safe, explosion-proof and UL approved equipment and instruments. 2. Implement requirement for G.F.I., double insulated tool usage, or assured grounding program in all outdoor operations, will be utilized. 3. Specify equipment needs to ensure that equipment used only for the purpose for which it is designed and to prevent abuse or misuse of the equipment. 4. Specify requirements for the inspections and maintenance of specialized equipment. 5. Specify that all equipment utilized on the project meets all OSHA requirements.	1. First aid on site. 2. Transport for medical care if necessary.
Wildlife	1. Inspect work environment where tasks are being performed. 2. Awareness to bites. 3. Dogs, animals, poison ivy, etc.	1. First aid on site. 2. Seek medical attention if symptoms-signs persist.
Trenching and Excavation	1. Implement ERCS/TAT/EPA excavation procedures if entry required into any excavation greater than 4 feet depth. 2. Specify that Competent Person(s) assigned to project be present at all times personnel inside trench(s). 3. Specify that a Professional Engineer design specialized shoring systems for those that are extremely deep. 4. Specify special PPE and monitoring requirements for excavations in soils contaminated with hazardous materials or gases and vapors. 5. Ensure excavations comply with 29CFR 1926, Subpart P.	1. Competent person in the immediate area at all times that personnel are required to enter trenches. 2. Operations shut down if the excavation shows any sign of cave in, excessive water, unacceptable levels of toxic contaminants, changing weather, or shoring systems have visible defects. 3. Equipment operators keep all personnel inside excavation in sight. No suspended loads or movement of buckets over personnel. 4. Regular monitoring is performed in excavations where toxic gases or vapors are possible.

recycle paper
ecology and environment

PHYSICAL/ENVIRONMENTAL HAZARD ANALYSIS

HAZARD	PRE PLANNING TO CONTROL HAZARD	ACTIVE CONTROL MEASURES
Weather Conditions	1. Evaluate prevailing weather conditions for the site. 2. Contingency plans developed for likely severe weather conditions such as tornado, and extreme thunderstorm. 3. Provide for daily weather forecast service in extreme weather areas. 4. Plan to weatherize safety systems, such as showers and eye washes, that would be impacted by extreme cold weather. 5. Order necessary specialized cold weather clothing. 6. Grounding and bonding requirements defined for thunderstorm areas. 7. Sheltered air conditioned break areas provided for extreme hot and cold weather zones.	1. Employees trained in contingency plan for severe weather conditions. 2. Emergency water sources inspected regularly in cold areas. 3. Weather service contacted regularly during storm conditions. 4. Supervisory personnel cease operations during extreme storm conditions (i.e., first scenes of thunderstorms). Personnel evacuate to safe assembly area.

recycle paper

ecology and environment

3.0 PERSONNEL TRAINING

[1] Initial Training

a. 40 Hour Training

All field employees receive forty hours of classroom training on safe work practices and hazardous waste sites.

b. Supervisor/Managers

Manager and Supervisors receive eight hours of training on safe management of hazardous waste sites. All training complies with 29CFR 1910.120.

The following individuals are Site Supervisors:

[1] Mark Douglas - RES
[2] _____

[2] Site Specific Training

a. All assigned personnel will receive site specific training on routes of exposure and adverse health effects associated with the chemicals listed on the attachment.

b. At least one member of each work crew shall have training in the use of portable fire extinguishers in accordance with 29CFR 1910.157G.

c. IAW 29CFR 1910.120, all personnel newly assigned to hazardous waste work will receive 3 days of on the job training by an experienced supervisor. This typically is achieved by coordinating the work schedule so that they perform 25% of the expected workload the first day; 50% the second day, and 75% the third day.

d. Each person entering the site shall sign a statement attesting to the fact that they have read and understand the Site Specific Safety Plan. (Attachment Z)

[3] Annual Refresher

All field employees receive eight hours of refresher training on the above topics within the anniversary date of their initial 40 hour class.

[4] First Aid/CPR

All field employees receive initial and recertification training. Treatment limited to Good Samaritan/minor first aid. All traumatic/major first aid, and cardiac problems will be referred to medical facilities.

[5] Subcontractor Requirements

All subcontractors entering the contamination reduction zone and exclusion zone will have adequate training satisfying 29 CFR 1910.120.

4.0 PERSONAL PROTECTIVE EQUIPMENT

The following is a brief description of the personal protective equipment which may be required during various phases of the project. The U.S. EPA terminology for protective equipment will be used; Levels A, B, C and D.

Respiratory protective equipment shall be NIOSH-approved and use shall conform to OSHA 29 CFR Part 1910.134 Requirements. Each employer shall maintain a written respirator program detailing selection, use, cleaning, maintenance and storage of respiratory protective equipment. The written Respirator Program will be maintained at the local and regional offices.

4.1 Level A Protection Shall Be Used When:

- The extremely hazardous substance requires the highest level of protection for skin, eyes and the respiratory system;
- Substances with a high degree of hazard to the skin are known or suspected;
- Chemical concentrations are known to be above IDLH levels; or,
- Biological hazards requiring Level A are known or suspected.

4.1.1 Level A Protective Equipment at a Minimum Shall Consist of:

Specific protective equipment for each level of protection is as follows:

Protective Gear - Level A (Check and list required type)

Supplied Air _____
5-minute Egress _____
Spare Air Tanks _____
Encapsulated Suit (type) _____
Inner Gloves (type) _____
Boot Covers (booties) _____
Outer Chemical Gloves (type _____
Outer Work Gloves (type) _____
Safety Shoes/Boots (type) _____
Hard Hat _____
Respiratory Inserts _____
Other (List_____) _____
Other (List_____) _____
Other (List_____) _____
Other (List_____) _____
Other (List_____) _____
Modifications: Level A work not anticipated at this site.

4.2 Level B Protection Shall Be Used When:

- The substance(s) has been identified and requires a high level of respiratory protection but less skin protection;
- Concentrations of chemicals in the air are IDLH or above the maximum use limit of an APR with full-face mask;
- Oxygen deficient or potentially oxygen deficient atmospheres (<19.5%) are possible; and/or,
- Confined space entry may require Level B.
- Incomplete identification of gases and vapors, but not suspected to be harmful to skin or skin absorbable.

4.2.1 Level B Protective Equipment at a Minimum Shall Consist of:

Protective Gear - Level B	(Check and list required type)
Supplied Air	Fullface SCBA or Airline
5-minute Egress	used with airline
Chemical Resistant/Protective Coveralls	Saranex
Full Body Apron or Others (type)	na
Inner Gloves (type)	Latex Surgical
Outer Chemical Gloves (type)	Silver Shield
Outer Work Gloves (type)	Nitrile
Safety Shoes/Boots (type)	Steel toe chemical resistant
Boot Covers (booties)	Optional
Hard Hat	Required
Respiratory Inserts	Optional
Other (List_____)	_____
Other (List_____)	_____
Other (List_____)	_____
Other (List_____)	_____
Other (List_____)	_____

Modifications:_____

NOTE: Use of Level B personal protective equipment requires that one (1) person must be available as backup ready to provide emergency assistance.

4.3 Level C Protection Shall Be Used When:

- The same level of skin protection as Level B, but a lower level of respiratory protection is required;
- The types of air contaminants have been identified, concentrations measured, and an air-purifying respirator is available that can remove contaminants; or,
- The substance has adequate warning properties and all criteria for the use of APR respirators has been met.

recycled paper ecology and environment

4.3.1 Level C Protective Equipment at a Minimum Shall Consist of:

Protective Gear - Level C (Check and list required type)

MSA Air Purifying Respirator or PAPR	Fullface APR
Cartridges (type)	GMC-H
Escape Mask	N/A
Chemical Resistant/Protective Coveralls	Saranex
Full Body Apron or Other (type)	N/A
Inner Gloves (type)	Latex surgical
Outer Chemical Gloves (type)	silver shield
Outer Work Gloves (type)	nitrile
Safety Shoes/Boots (type)	required
Hard Hat	required
Respiratory Inserts	optional
Other (List_____)	
Other (List_____)	
Other (List_____)	
Other (List_____)	
Other (List_____)	

Modifications:_____

4.4 Level D Protection Shall Be Used When:

- The atmosphere contains no known hazard; and,
- Work functions preclude splashes, immersion or the potential for unexpected inhalation of, or contact with, hazardous concentrations of harmful chemicals.

4.4.1 Level D Protection Equipment at a Minimum Shall Consist of:

Protective Gear - Level D (Check and list required type)

Chemical Resistant/Protective Coveralls	
Rain Suit	
Safety Shoes/Boots (type)	
Boot Covers (booties)	
Work Gloves (type)	
Hard Hat	
Face Shield	
Safety Glasses	

Modifications:_____

Specific operating procedures for PPE and Respiratory Protection are in Attachment D.

4.5 Decisions to Upgrade/Downgrade PPE

[1] All decisions to downgrade from Level B to C or D must be accompanied by air monitoring results. The Regional Safety Managers (ERCS, TAT) must be advised of on-site decisions to downgrade. All decisions must be documented with an Addendum to the Plan.

[2] The following conditions will necessitate reevaluation of PPE use.

a. commencement of a new work not previously identified
b. change of job tasks during a work phase
c. change of season/weather
d. contaminants other than those identified in Safety Plan
e. change in ambient levels of contaminants
f. change in work which affects degree of chemical contact

[3] Action Levels (See Section 6.0)

5.0 MEDICAL SURVEILLANCE

5.1 Pre-Employment Physical

a. Pre-employment and periodic update medical examinations are required for persons working at hazardous waste sites.
b. All physicals must be completed and documented prior to assignment to this site.
c. All physical exams will be conducted following parameters established by the respective employee's Corporate Physicians.

5.2 Site Specific Physical Examination

a. _____
b. _____
c. A current fitness for duty statement will be kept on site for all personnel.

5.3 Annual Physical Exam

The medical examination must have been within a 12-month period prior to on-site activity and repeated annually.

5.4 Accidental/Suspected Exposure Physical

a. Following any accidental or suspected uncontrolled exposure to site contaminants, personnel should be scheduled for a special physical examination.
b. The physical examination will be specific for the contaminants and the associated target organs or physiological system.
c. _____
_____
_____
d. Questions regarding the type of physical can be directed to the employer's Directors of Health and Safety or their Corporate Physicians. See Section 10.2 for their respective phone numbers.

5.5 Contractor Physical Examination Requirements

All subcontractors entering the contamination reduction or exclusion zone will have adequate medical surveillance satisfying 29CFR 1910.120.10 (f).

5.6 Site Documentation

All personnel on-site must have the following documentation available on site:

[1] Copy of 40 hour certificate
[2] Copy of Manager's/Supervisor's 8 hour certificate
[3] Copy of 8 Hour Annual Refresher (if > 12 months since 40 hour)
[4] CPR/First Aid Certificate (annual)
[5] Respirator Fit Test (annual)
[6] Medical Fitness For Duty
[7] Memorandum of Understanding & Consent (RES only)
[8] Worksite Exposure Documentation

6.0 AIR MONITORING AND ACTION LEVELS

According to 29 CFR 1910.120 (h) Air Monitoring shall be used to identify and quantify airborne levels of hazardous substances and health hazards in order to determine the appropriate level of employee protection needed on-site.

6.1 Routine Air Monitoring Requirements

- Upon initial entry to rule out IDLH conditions;
- When the possibility of an IDLH condition or flammable atmosphere has developed;
- When work begins on a different portion of the site;
- Contaminants other than those previously identified are being handled;
- A different type of operation is initiated;
- Employees are handling leaking drums or containers or working in areas with obvious liquid contamination; and,
- During confined space work.

Air monitoring will consist at a minimum of the criteria listed below. All air monitoring data will be documented and submitted to the OSC and available in the command post site files for review by all interested persons. Air monitoring instruments will be calibrated and maintained in accordance with the manufacturer's specifications. Calibration and maintenance performed will be entered in the site log and/or instrument log book.

6.2 Site Specific Air Monitoring Requirements

INSTRUMENT	COMPOUNDS TO DETECT	FREQUENCY	COMMENTS/ ACTION LEVEL
Combustible Gas Indicator (CGI)	Explosive/ Flammable Atmospheres	Initial walkthrough/ Drum sampling	> 10% LEL
PID/FID	Organic Vapors and Gases	Continuous	Unidentified contaminants* >Bkgrnd - <1ppm over bkgrnd Level D > 1 over Bkgrnd - < 5 ppm over Bkgrnd Level C >5 over Bkgrnd - 500 ppm over Bkgrnd Level B
Asbestos/Fiber Monitoring	Asbestos	N/A	> 0.01 fibers/cc for PCM > 70 structures/mm^2 for TEM > 1% asbestos/weight bulk sample
Jerome Mercury Analyzer	Mercury Vapors	N/A	> .025 mg/m^3
Detector Tubes	Various	During Hazcatting	
Radiation Meter	Radiation	N/A	> 2 mR/hr
Oxygen Meter	Oxygen	N/A	<19.5% and >23.5% O_2

* The reading must be sustained for one (1) minute in the breathing zone.

6.3 Personnel Monitoring

Explain strategy or why not required: Not applicable

6.3.1 Sampling Methods (media type, analyses, NIOSH Method Number, etc.): N/A

6.3.2 Describe calibration procedures: N/A

6.3.3 Analytical laboratory to be used:

6.4 Noise Monitoring: [ ] Yes [X] No

Describe monitoring strategy: Ear plugs to be utilized around heavy equipment

6.5 Heat Stress Monitoring: [ ] Yes [X] No

Describe monitoring strategy: Not applicable due to weather

6.6 Perimeter: [X] Yes [ ] No

Describe: Perimeter real-time air monitoring to be conducted along fenceline during drum sampling.

Other: [ ] Yes [ ] No

Describe:

6.7 Name(s) of Monitoring Technician(s):
Karen Rydzewski - TAT
Donovan Robin - TAT

6.8 Location of Monitoring Records:

Copies of monitoring records will be retained in the job file upon the completion of the job. Additional copies will be maintained in the Health and Safety Department.

7.0 SITE CONTROL AND STANDARD OPERATING PROCEDURES

7.1 Work Zones

The primary purpose for site controls is to establish the hazardous area perimeter, to reduce migration of contaminants into clean areas and to prevent access or exposure to hazardous materials by unauthorized persons. At the end of each workday, the site should be secured or guarded, to prevent unauthorized entry. Site work zones will include:

7.1.1 Clean Zone/Support Zone

This uncontaminated support zone or clean zone will be the area outside the exclusion and decontamination zones and within the geographic perimeters of the site. This area is used for staging of materials, parking of vehicles, office and laboratory facilities, sanitation facilities, and receipt of deliveries. Personnel entering this zone may include delivery personnel, visitors, security guards, etc., who will not necessarily be permitted in the exclusion zone. All personnel arriving in the support zone will upon arrival, report to the command post and sign the site entry/exit log. There will be one controlled entry/exit point from the clean zone to the decontamination zone.

[1] Location of Clean Zone _____

7.1.2 Decontamination Zone

The decontamination zone will provide a location for removal of contaminated personal protective equipment and final decontamination of personnel and equipment. All personnel and equipment should exit via the decon area. A separate decontamination area will be established for heavy equipment.

[1] The decontamination zone is a buffer zone between contaminated and clean areas.
[2] Identified by yellow banner guard.
[3] Decon line is located _____

7.1.3 Exclusion Zone/Hot Zone

The exclusion zone will be the "hot-zone" or contaminated area inside the site perimeter. Entry to and exit from this zone will be made through a designated point and all personnel will be required to sign the hot zone entry/exit log located at the decon area. Appropriate warning signs to identify the exclusion zone should be posted (i.e. "DANGER - AUTHORIZED PERSONNEL ONLY", "PROTECTIVE EQUIPMENT REQUIRED BEYOND THIS POINT", etc.) Exit from the exclusion zone must be accompanied by personnel and equipment decontamination as described in Section 8.0.

[1] Will be identified by red banner guard.

[2] These areas will be defined by Caution banners (yellow)

[3] General Safety Rules for Exclusion Zone
- a. wear the appropriate level of PPE defined in plan
- b. do not remove any PPE or break the integrity to pick, scratch, or touch parts of your body
- c. no smoking, eating or drinking
- d. no horseplay
- e. no matches or lighters in this zone
- f. implement the communication and line of sight system

A map of the work zones for this site follows.

7.2 General Field Safety Rules

- All visitors must be sent to the command post and referred to the OSC.
- It is EPA policy to practice administrative hazard control for all site areas by restricting entrance to exclusion zones to essential personnel and by using operational SOPs.
- Whenever possible, avoid contact with contaminated (or potentially contaminated) surfaces. Walk around (not through) puddles and discolored surfaces. Do not kneel on the ground or set equipment on the ground. Stay away from any waste drums unless necessary. Protect equipment from contamination by bagging.
- Eating, drinking, or smoking is permitted only in designated areas in the support zone.
- Hands and face must be thoroughly washed upon leaving the decon area.
- Beards or other facial hair that interferes with respirator fit will preclude admission to the hot zone.
- All equipment must be decontaminated or discarded upon exit from the exclusion zone, as determined by the OSC or designate.
- All personnel exiting the exclusion zone must go through the decontamination procedures described in Section 8.0.
- Safety Equipment described in Section 4.0 will be required for all field personnel in the exclusion zone.
- Personnel will only travel in vehicles where individual seats (for each occupant are provided. Seat belts will be worn as required.

- Fire extinguishers will be available on site and in all areas with increased fire danger such as the refueling area.
- A minimum of two personnel will always be on site whenever heavy equipment is operated. Only necessary personnel need to be on or around heavy equipment.
- Employees will not interfere with or tamper in any way with air monitoring equipment.
- Backhoes or other equipment with booms shall not be operated within 10 feet of any electrical conductor.
- Visitor log will be maintained at the command post or with the security guard. All personnel coming on site will sign in and out on a daily basis.
- Security will be maintained at the site by closing all gates during normal work hours. The OSC will assume responsibility for personnel entering site. Site will be locked up in the evening.
- EPA OSC will allow only those individuals authorized to enter the site. If unauthorized members of the public are found on site, contact security immediately and do not leave the individual unattended.
- Visitors are not allowed in the work areas without authorization and not without appropriate levels of PPE as determined by site safety personnel. Access to the properties is restricted to the EPA and authorized representatives. Persons other than the residents must sign in at the Command Post and receive authorization to enter the site.
- Buddy System
  [1] The buddy system is mandatory at anytime that personnel are working in the exclusion zone, remote areas, on tanks, or when conditions present a risk to personnel.

  [2] A buddy system requires at least two trained/experienced people who work as a team and maintain at a minimum audible and/or visual contact while operating in the exclusion zone.
- Communication Procedures
  [1] Radios will be used for on site communications and Channel _____ will be the designated channel.
  [2] The crews should remain in constant radio or visual contact while on site.
  [3] The site evacuation signal will be 3 blasts on the air or vehicle horn.

8.0 DECONTAMINATION PROCEDURES

In general, everything that enters the exclusion zone at this site, must either be decontaminated or properly discarded upon exit from the exclusion zone. All personnel, including any state and local officials must enter and exit the hot zone through the decon area. Prior to demobilization, contaminated equipment will be decontaminated and inspected by the OSC or OSC designate before it is moved into the clean zone. Any material that is generated by decontamination procedures will be stored in a designated area in the exclusion zone until disposal arrangements are made.

All personnel must be documented on the "HOT ZONE ENTRY/EXIT LOG" when entering and exiting the exclusion zone.

NOTE: The type of decontamination solution to be used is dependent on the type of chemical hazards. The decontamination solution for this site is Alconox. Decontamination solution will be changed daily (at a minimum) and collected and stored on-site until disposal arrangements are finalized.

8.1 Procedures for Equipment Decontamination

Following decontamination and prior to exit from the hot zone, the OSC or a designated alternate, shall be responsible for insuring that the item has been sufficiently decontaminated. This inspection shall be included in the site log.

Equipment decontamination will consist of the following steps:

_____

_____

8.2 Procedure for Personnel Decontamination

This decontamination procedure applies to personnel at this site wearing Level B and C protection. These are the minimum acceptable requirements:

Station 1: Equipment Drop
Deposit equipment used on-site (tools, sampling devices and monitoring instruments, radios, etc.) on plastic drop cloths. These items must be decontaminated or discarded as waste prior to removal from the exclusion zone.

Station 2: Outer Boot and Outer Glove Wash and Rinse
Scrub outer boots, outer gloves and/or splash suit with decon- tamination solution or detergent water. Rinse off using water.

Station 3: Outer Boot and Glove Removal
Remove outer boots and gloves. If outer boots are disposable, deposit in container with plastic liner. If non-disposable, store in a clean dry place.

Station 4: Tank Change
If person leaves exclusion zone to change air tank, this is the last step in the decontamination procedure. Air tank is exchanged, new outer gloves and boot covers donned, joints taped, and person returns to hot zone.

Station 5: Outer Garment Removal
If applicable, remove SCBA back-pack and remain on air as long as possible. Remove Chemical Resistant Outer Garments and deposit in container lined with plastic. Decontaminate or dispose of splash suits as necessary.

Station 6: Respiratory Protection Removal
Remove hard-hat, face-piece, and if applicable, deposit SCBA on a clean surface. APR cartridges will be discarded as appropriate. Wash and rinse respirator at least daily. Wipe off and store respiratory gear in a clean, dry location. (See Attachment D)

Station 7: Inner Glove Removal
Remove inner gloves. Deposit in container for disposal.

Station 8: Field Wash
Thoroughly wash hands and face with soap and water. Shower as soon as possible.

Eating, drinking, chewing gum/tobacco, smoking, or any practice that increases the probability of hand to mouth transfer and/or ingestion of materials is prohibited in any areas where the possibility of contamination exists and is permitted only in the designated break area.

Personnel will not wear or bring dirty/decontaminated clothing into the break areas.

8.3 Emergency decontamination will consist of the following steps:
(Any blood contaminated material will be bag, labeled and accompany the individual to the hospital.)

8.4 The following decontamination equipment is required:

8.5 Disposition of Decontamination Wastes

[1] All equipment and solvents used for decontamination shall be decontaminated or disposed of with the established waste streams.
[2] Commercial laundries or cleaning establishments that decontaminate or are used to launder contaminated clothing shall be informed of the presence and potentially harmful effects of the contaminants.
[3]

A sketch of the decon area for this site is shown in Attachment B.

9.0 HAZARD COMMUNICATION PROGRAM

Each contractor will be responsible for maintaining a copy of their Hazardous Communication Program and MSDS' on site. The following items are specific to this job site:

9.1 Material Safety Data Sheets

[1] Material Safety Data Sheets will be maintained at the Command Post in the Health and Safety Binder.
[2] MSDS' will be available to all employees for review during the work shift.
[3] See Attachment C and/or the ERCS Health and Safety Binder.

9.2 Container Labeling

[1] All containers received on site will be inspected by the contractor using the material to ensure the following:
a. all containers clearly labeled
b. appropriate hazard warning
c. name and address of the manufacturer

9.3 The following chemicals were brought to the site:

[1] Alconox
[2] Gasoline
[3] (Hazcat) Supplies
[4] Diesel Fuel
[5] Office Supplies
[6] _____

9.4 Employee Training and Information

[1] Prior to starting work, each employee will attend a health and safety orientation and will receive information and training on the following:
a. an overview of the requirements contained in the Hazardous Communication Standard
b. Hazardous chemicals present at the site
c. the location and availability of the written Haz Comm Program
d. physical and health effects of the hazardous chemicals
e. methods of preventing or eliminating exposure
f. emergency procedures to follow if exposed
g. how to read labels and review MSDS' to obtain information
h. location of MSDS file and location of hazardous chemical list

See ERCS/TAT Health and Safety Binder for Hazard Communication Program and applicable MSDS'.

10.0 EMERGENCIES/ACCIDENTS/INJURIES

It is essential that site personnel be prepared in the event of an emergency. Emergencies can take many forms; illnesses or injuries, chemical exposure, fires, explosions, spills, leaks, releases of harmful contaminants, or sudden changes in the weather. The following sections outline the general procedures for emergencies. Emergency information should be posted as appropriate.

10.1 Emergency Contacts for the MCC Site

Fire: Chicago Fire Deprtment 911

Police: Chicago Police Department 911

Sheriff: Cook County 911

Ambulance: 911

Hospital: **Cook County Hospital**
1835 West Harrison Avenue
Chicago, Illinois

Telephone: 312-633-6324 Chemical Trauma Capabilities? YES

Poison Control Center: 911

***Directions from Site to Hospital (See Map in Attachment B):**

Kostner NORTH (left) to Roosevelt Road EAST (right) to Ogden Boulevard NORTHEAST (angled left) to Harrison Avenue EAST (right). Cook County Hospital on south side of street between Wolcott and Wood.

NOTE: Maps and directions to the hospital will be posted in the office, decon trailers and decontamination area.

The route to the hospital was verified by: ALLEN FRANC on 1/4/95. Distance from site to hospital is 5 miles. Approximate driving time is 12 MINUTES. The fire, police, and hospital were notified of site operations by _____ on _____.

The following individuals have been trained in CPR and First Aid:

Mark Parquette

Karen Rydzewski

Donovan Robin

10.2 Additional Emergency Numbers

National Response Center	800-424-8802
U.S. EPA Region V - E.R. Branch	312-353-2318 (24 hr)
Center for Disease Control	404-488-4100 (24 hr)
AT&F (Explosives Information)	800-424-9555
Chemtrec	800-424-9300
State Environmental Agency (IEPA)	

Ecology & Environment, Inc. Contacts

E & E Regional Office (for this site)	312-663-9415
E & E MEDTOX Emergency Medical Hotline	501-221-0463 (24 Hr.) 904-462-3277/3281
Dr. Harbison (Home)	[redacted]
E & E Corporate H & S - Dr. Paul Jonmaire	[redacted]
E & E Emergency Operations Center Hotline	~~716-684-8940~~ (24 Hr.) [redacted]
TAT Leader Region V - Thomas Kouris	312-663-9415

Riedel Environmental Services, Inc. Contacts

Riedel Environmental Services	800-334-0004 (24 Hr.)
Riedel Environmental Services (Chicago)	708-238-1818
Riedel Environmental Services (St. Louis)	314-532-7660
RES Corporate H & S - ~~Mike Amen~~ MARGARET CUNNINGHAM	800-334-0004

EPA

Federal Occupational Health Unit	312-353-0379

10.3 Emergency Equipment Available On-Site

Communications Equipment Location

Public Telephones: _____

Private Telephones: _____

Mobile Telephones: _____

Two-Way Radios: _____

Emergency Alarms/Horns: _____

Medical Equipment

First Aid Kits: _____

Inspection Date: _____ By: _____

Stretcher/Backboard: _____

Eye Wash Station: _____
(within 100 feet of hazard zone)

Safety Shower: _____

Fire-Fighting Equipment

Fire Extinguishers: _____

Inspection Date: _____ By: _____

Other: _____

Spill or Leak Equipment

Absorbent Boom/Pads: _____

Dry Absorbent: _____

Additional Emergency Equipment

_____

_____

10.4 Accident Reporting/Investigations (See Attachment F for proper procedures.)

11.0 EMERGENCY RESPONSE CONTINGENCY PLAN

11.1 Project Personnel Responsibilities During Emergencies

ON-SCENE COORDINATOR (OSC)

As the administrator of the project, the OSC has primary responsibility for responding to and correcting emergency situations. The OSC will:

- Take appropriate measures to protect personnel including: withdrawal from the exclusion zone, total evacuation and securing of the site or up-grading or down-grading the level of protective clothing and respiratory protection.
- Take appropriate measures to protect the public and the environment including isolating and securing the site, preventing run-off to surface waters and ending or controlling the emergency to the extent possible.
- Ensure that appropriate Federal, State and local agencies are informed, and emergency response plans are coordinated. In the event of fire or explosion, the local fire department should be summoned immediately. In the event of an air release of toxic materials, the local authorities should be informed in order to assess the need for evacuation. In the event of a spill, sanitary districts and drinking water systems may need to be alerted.
- Ensure that appropriate decon treatment or testing for exposed or injured personnel is obtained.
- Determine the cause of the incident and make recommendations to prevent the recurrence.
- Ensure that all required reports have been prepared.

RESPONSE MANAGER (RM)

The RM must immediately report emergency situations to the OSC, take appropriate measures to protect site personnel and assist the OSC as necessary in responding to and mitigating the emergency situation.

TECHNICAL ASSISTANCE TEAM (TAT)

The TAT must immediately report emergency situations to the OSC, take appropriate measures to protect site personnel and assist the OSC as necessary.

recycled paper ecology and environment

11.2 Medical Emergencies:

Any person who becomes ill or injured in the exclusion zone must be decontaminated to the maximum extent possible when practical. If the injury or illness is minor, full decontamination should be completed and first aid administered prior to transport. If the patient's condition is serious, at least partial decontamination should be completed (i.e., complete disrobing of the victim and redressing in clean coveralls or wrapping in a blanket.) First aid should be administered while awaiting an ambulance or paramedics. All injuries and illnesses must immediately be reported to the OSC.

Any person transporting an injured/exposed person to a clinic or hospital for treatment should take with them directions to the hospital and information on the chemical(s) they may have been exposed to. This information is included in Table 2.3. Any vehicle used to transport contaminated personnel, will be cleaned or decontaminated as necessary.

11.3 Fire or Explosion:

In the event of a fire or explosion, the local fire department should be summoned immediately. Upon their arrival the OSC or designated alternate will advise the fire commander of the location, nature and identification of the hazardous materials on- site.

If it is safe to do so, site personnel may:

- Use fire fighting equipment available on site.
- Remove or isolate flammable or other hazardous materials which may contribute to the fire.

11.4 Spills, Leaks or Releases:

In the event of a spill or a leak, site personnel will:

- Locate the source of the spillage and stop the flow if it can be done safely.
- Begin containment and recovery of the spilled materials.

recycled paper ecology and environment

11.5 Evacuation Routes and Resources:

Evacuation routes have been established by work area locations for this site. All buildings and outside work areas have been provided with two designated exit points. Evacuation should be conducted immediately, without regard for equipment under conditions of extreme emergency. See site map for evacuation routes.

- Evacuation notification will be three blasts on an air horn, vehicle horn, or by verbal communication via radio.
- Keep upwind of smoke, vapors or spill location.
- Exit through the decontamination corridor if possible.
- If evacuation is not via the decontamination corridor, site personnel should remove contaminated clothing once they are in a location of safety and leave it near the exclusion zone or in a safe place.
- The OSC will conduct a head count to insure all personnel have been evacuated safely.
- In the event that emergency site evacuation is necessary, all personnel are to:
  1. Escape the emergency situation;
  2. Decontaminate to the maximum extent practical; and,
  3. Meet at the U.S. EPA command post.
- In the event that the U.S. EPA command post is no longer in a safe zone, meet: _____.

recycled paper ecology and environment

12.0 CONFINED SPACE

A confined space is defined as a space or work area not designed or intended for normal human occupancy, having limited means of access and poor natural ventilation, and or any structure, including buildings or rooms which have limited means of egress. Examples include tanks, vats, and basements. Confined spaces identified at this site are listed below. If a confined space entry is conducted, it will be done in accordance with procedures presented in Attachment _____.

Type of Confined Space	Location On-Site	Comments

recycled paper

ecology and environment

ATTACHMENT A
SITE SAFETY PLAN AMENDMENTS

SITE SAFETY PLAN AMENDMENT: #___ : _____

SITE NAME: _____
DATE: _____

TYPE OF AMENDMENT: _____
REASON FOR AMENDMENT: _____
_____
_____
_____

ALTERNATE SAFEGUARD PROCEDURES: _____
_____
_____
_____

REQUIRED CHANGES IN PPE: _____
_____
_____
_____

_____ _____ _____ _____ERCS Response Manager (Date)
ERCS Safety Manager (Date)

_____ _____ _____ _____E & E Lead TAT Member (Date)
E & E RSO (Date)

_____ _____
U.S. EPA OSC (Date)

ATTACHMENT B
SITE MAPS

Hospital Map Pg. 1 of 1 Cook Co. Hosp. 312-633-6324

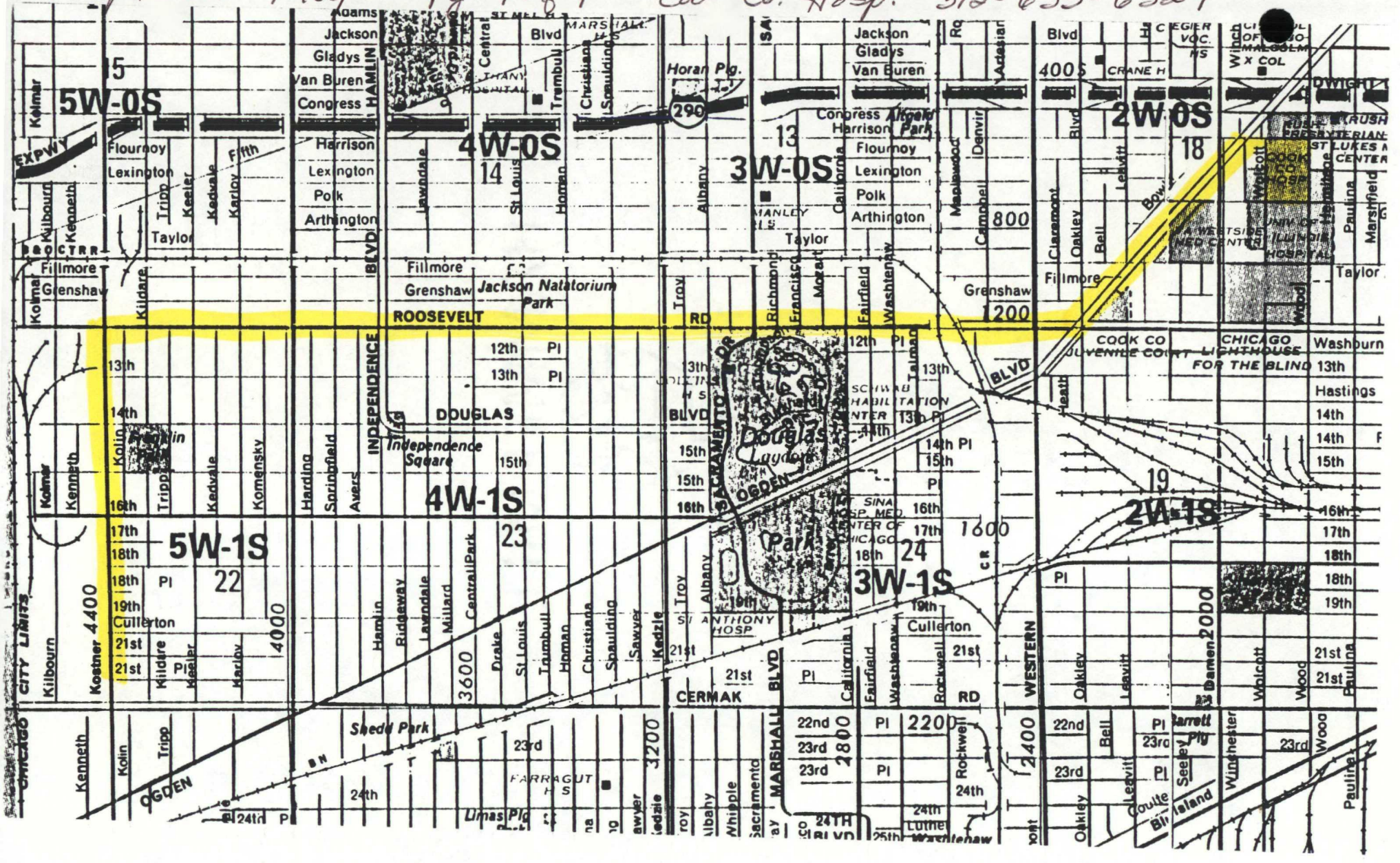

Kostner north to Roosevelt Rd., turn east (right) onto Roosevelt Rd., Follow Roosevelt Rd to Ogden Blvd (which crosses diagonally), Turn NE onto Ogden (soft left) + follow to Harrison Ave., Turn E (right) onto Harrison. Cook Co. Hosp. on right ~2 blocks.

ATTACHMENT C
CHEMICAL HAZARD INFORMATION

ATTACHMENT D

PERSONAL PROTECTIVE EQUIPMENT AND RESPIRATORY PROTECTION SOP'S

INSPECTION OF PERSONAL PROTECTIVE CLOTHING

[1] Determine that clothing material is correct for specified task
- a. compatibility chart
- b. chemical hazard chart in Safety Plan
- c. MSDS

[2] Visually inspect material for:
- a. imperfect seams
- b. non-uniform coatings
- c. tears
- d. discoloration/degradation
- e. malfunctioning closures

[3] Hold up to light and check for pinholes.

[4] Flex material:
- a. observe for cracks
- b. other signs of shelf deterioration

[5] If the material has been used previously, inspect inside and out for signs of chemical penetration/degradation
- a. discoloration
- b. swelling
- c. stiffness

[6] During the work task:
- a. evidence of discoloration/degradation
- b. closure failure
- c. tears
- d. punctures
- e. seam discontinuities

recycled paper ecology and environment

RESPIRATORY PROTECTION

General Guidelines

[1] All personnel required to use respirators will select and use the respirators based upon guidelines established by OSHA, NIOSH, and the RES Respiratory Protection Program.

[2] All individuals required to wear respirators will have received a documented pre-issue qualitative fit test for the MSA full-face.

[3] Each individual will be responsible for conducting a positive/negative fit check each time the respirator is donned.

[4] Each individual shall be responsible for cleaning his/her own respirator at least once daily and is permitted to leave the work area to wash his/her own respirator as needed.

[5] Cartridges or filters shall be changed after each daily use or whenever an increase in breathing resistance/odor is detected, or if they become wet. All changes will be made in uncontaminated areas.

[6] No RES employee shall wear a respirator until he/she has been examined by a physician and determined to be physically able to wear respiratory protection. This examination shall be documented at the site.

[7] All personnel must be qualitively fit test every six months.

Air Purifying Respirator Inspection and Checkout

[1] Visually inspect the entire unit for any obvious damages, defects, or deteriorated rubber.

[2] Make sure the facepiece harness is not damaged.

[3] Inspect lens for damage and proper seal in facepiece.

[4] Exhalation Valve
Pull off plastic cover and check valve for debris, tears, or deformities in the neoprene valve.

[5] Inhalation Valve
Screw off cartridges/canister and visually inspect neoprene valves for tears. Make sure than inhalation valves and cartridge receptacle gaskets are in place.

[6] Insure that the speaking diaphragm retainer ring is hand tight.

[7] Make sure than you have the correct cartridge.

[8] Don and perform positive and negative pressure check.

recycled paper
ecology and environment

Storage of Air Purifying Respirators

[1] OSHA requires that respirators be stored to protect against:

* Dust
* Sunlight
* Heat
* Extreme Cold
* Excessive Moisture
* Damaging Chemicals
* Mechanical Damage

[2] Respirators must be stored in a clean area which is not likely to be contaminated by the work in progress.

[3] Respirators should not be hung from their headbands for prolonged periods of time.

SCBA Inspection and Checkout

[1] Monthly Inspection

a. check cylinder label for current hydrostatic test date
b. inspect cylinder for large dent or gouges
c. inspect cylinder gauge for damage
d. complete routine inspection
e. fill out inspection documentation card

[2] Routine Inspection

a. Pre-Operational
* high-pressure hose connector is tight on cylinder fitting
* by-pass valve is closed
* mainline valve is closed
* regulator outlet is not covered or obstructed

b. Backpack and Harness Assembly
* inspect backpack/harness straps for wear, damage, secure
* check wear and function of belts
* check backplate and cylinder holder for damage c. Cylinder and High Pressure Hose Assembly
* check cylinder to insure firmly attached to backplate
* open cylinder valve; listen or feel for leakage around packing and hose connection
* check high pressure hose for damage or leaks

recycled paper ecology and environment

d. Regulator
* cover regulator outlet with palm of hand
* open mainline valve
* remove hand from regulator outlet
* open by-pass valve slowly to assure proper function
* close by-pass valve
* open mainline valve
* note pressure reading on regulator gauge
* close cylinder valve while keeping hand over regulator outlet
* slowly remove hand from outlet and allow air to flow
* note pressure when low pressure warning alarm sounds; it should be 550-650 psi
* close mainline valve
* check regulator for leaks by blowing air into regulator for 5-10 seconds
* draw air from outlet for 5-10 seconds
* if a positive pressure or vacuum cannot be maintained, there is a leak.

e. Facepiece & Corrugated Breathing Hose
* inspect head harness and facepiece for damage, serrations, and deteriorated rubber
* inspect lens for damage and proper seal in facepiece
* inspect exhalation valve for damage and dirt buildup
* stretch breathing hose and carefully and inspect for holes and deterioration
* inspect connector for damage and presence of washer
* perform negative pressure test with facepiece donned

f. Storage
* refill cylinder to 2216 psi
* close cylinder valve
* tightly connect high pressure hose to cylinder
* bleed pressure from high pressure hose by opening mainline valve
* close by-pass valve
* close mainline valve
* fully extend all straps
* store facepiece in a clean plastic bag for protection

ATTACHMENT E
ALCOHOL AND DRUG PROCEDURES

ALCOHOL AND DRUG POLICY (Riedel only)

[1] No personnel are to report to the site under the influence of drugs or alcohol.

[2] Failure to comply will result in being barred or removed from the site and/or other disciplinary action.

[3] All RES employees will receive, and pass, a drug screen prior to work beginning.

[4] A drug screen will be required of any personnel involved in an accident requiring medical attention.

a. The Response Manager is responsible for assuring that they have a copy of all Riedel employee's signed consent forms.

b. The supervisor will accompany the injured worker to the clinic for medical treatment and collection of the drug urinalysis.

[5] Response Manager will insure that they have Med-Tox Drug and Alcohol Kits on site.

ATTACHMENT F
ACCIDENT REPORTING/INVESTIGATIONS

RIEDEL ACCIDENT REPORTING/INVESTIGATIONS

- All injuries or accidents must be reported to the Response Manager or Site Safety Officer immediately.
- The Response Manager will conduct an immediate investigation of the accident and document all results on the Supervisor's Accident Investigation Report and State Worker's Compensation Form.
- The Response Manager will assign a supervisory individual to accompany all injured personnel to the clinic and follow guidelines outlined in the RET Return to Work Program.
- Copies of all Supervisor's Accident Reports will be sent to the Riedel Corporate Director of Health and Safety for ERCS personnel and copies of accident reports will be sent to TAT Regional offices when dealing with TAT personnel.

ATTACHMENT G
OSHA GUIDANCE AND REGULATIONS

"Small quantity generator" means a generator of hazardous wastes who in any calendar month generates no more than 1,000 kilograms (2,205 pounds) of hazardous waste in that month.

"Uncontrolled hazardous waste site" means an area where an accumulation of hazardous waste creates a threat to the health and safety of individuals or the environment or both. Some sites are found on public lands, such as those created by former municipal, county or state landfills where illegal or poorly managed waste disposal has taken place. Other sites are found on private property, often belonging to generators or former generators of hazardous waste. Examples of such sites include, but are not limited to, surface impoundments, landfills, dumps, and tank or drum farms. Normal operations at TSD sites are not covered by this definition.

(b) *Safety and health program.*

NOTE TO (b): Safety and health programs developed and implemented to meet other Federal, state, or local regulations are considered acceptable in meeting this requirement if they cover or are modified to cover the topics required in this paragraph. An additional or separate safety and health program is not required by this paragraph.

(1) *General.* (i) Employers shall develop and implement a written safety and health program for their employees involved in hazardous waste operations. The program shall be designed to identify, evaluate, and control safety and health hazards, and provide for emergency response for hazardous waste operations.

(ii) The written safety and health program shall incorporate the following:

(A) An organizational structure;

(B) A comprehensive workplan;

(C) A site-specific safety and health plan which need not repeat the employer's standard operating procedures required in paragraph (b)(1)(ii)(F) of this section;

(D) The safety and health training program;

(E) The medical surveillance program;

(F) The employer's standard operating procedures for safety and health; and

(G) Any necessary interface between general program and site specific activities.

(iii) *Site excavation.* Site excavations created during initial site preparation or during hazardous waste operations shall be shored or sloped as appropriate to prevent accidental collapse in accordance with Subpart P of 29 CFR Part 1926.

(iv) *Contractors and sub-contractors.* An employer who retains contractor or sub-contractor services for work in hazardous waste operations shall inform those contractors, sub-contractors, or their representatives of the site emergency response procedures and any potential fire, explosion, health, safety or other hazards of the hazardous waste operation that have been identified by the employer, including those identified in the employer's information program.

(v) *Program availability.* The written safety and health program shall be made available to any contractor or subcontractor or their representative who will be involved with the hazardous waste operation; to employees; to employee designated representatives; to OSHA personnel, and to personnel of other Federal, state, or local agencies with regulatory authority over the site.

(2) *Organizational structure part of the site program.*—(i) The organizational structure part of the program shall establish the specific chain of command and specify the overall responsibilities of supervisors and employees. It shall include, at a minimum, the following elements:

(A) A general supervisor who has the responsibility and authority to direct all hazardous waste operations.

(B) A site safety and health supervisor who has the responsibility and authority to develop and implement the site safety and health plan and verify compliance.

(C) All other personnel needed for hazardous waste site operations and emergency response and their general functions and responsibilities.

(D) The lines of authority, responsibility, and communication.

(ii) The organizational structure shall be reviewed and updated as necessary to reflect the current status of waste site operations.

(3) *Comprehensive workplan part of the site program.* The comprehensive workplan part of the program shall address the tasks and objectives of the site operations and the logistics and resources required to reach those tasks and objectives.

(i) The comprehensive workplan shall address anticipated clean-up activities as well as normal operating procedures which need not repeat the employer's procedures available elsewhere.

(ii) The comprehensive workplan shall define work tasks and objectives and identify the methods for accomplishing those tasks and objectives.

(iii) The comprehensive workplan shall establish personnel requirements for implementing the plan.

(iv) The comprehensive workplan shall provide for the implementation of the training required in paragraph (e) of this section.

(v) The comprehensive workplan shall provide for the implementation of the required informational programs required in paragraph (i) of this section.

(vi) The comprehensive workplan shall provide for the implementation of the medical surveillance program described in paragraph (f) of this section.

(4) *Site-specific safety and health plan part of the program.*—(i) *General.* The site safety and health plan, which must be kept on site, shall address the safety and health hazards of each phase of site operation and include the requirements and procedures for employee protection.

(ii) *Elements.* The site safety and health plan, as a minimum, shall address the following:

(A) A safety and health risk or hazard analysis for each site task and operation found in the workplan.

(B) Employee training assignments to assure compliance with paragraph (e) of this section.

(C) Personal protective equipment to be used by employees for each of the site tasks and operations being conducted as required by the personal protective equipment program in paragraph (g)(5) of this section.

(D) Medical surveillance requirements in accordance with the program in paragraph (f) of this section.

(E) Frequency and types of air monitoring, personnel monitoring, and environmental sampling techniques and instrumentation to be used, including methods of maintenance and calibration of monitoring and sampling equipment to be used.

(F) Site control measures in accordance with the site control program required in paragraph (d) of this section.

(G) Decontamination procedures in accordance with paragraph (k) of this section.

(H) An emergency response plan meeting the requirements of paragraph (l) of this section for safe and effective responses to emergencies, including the necessary PPE and other equipment.

(I) Confined space entry procedures.

(J) A spill containment program meeting the requirements of paragraph (j) of this section.

(iii) *Pre-entry briefing.* The site specific safety and health plan shall provide for pre-entry briefings to be held prior to initiating any site activity, and at such other times as necessary to ensure that employees are apprised of the site safety and health plan and that this plan is being followed. The information and data obtained from site characterization and analysis work required in paragraph (c) of this section shall be used to prepare and update the site safety and health plan.

(iv) *Effectiveness of site safety and health plan.* Inspections shall be conducted by the site safety and health supervisor or, in the absence of that individual, another individual who is knowledgeable in occupational safety and health, acting on behalf of the employer as necessary to determine the effectiveness of the site safety and health plan. Any deficiencies in the effectiveness of the site safety and health plan shall be corrected by the employer.

(c) *Site characterization and analysis*—(1) *General.* Hazardous waste sites shall be evaluated in accordance with this paragraph to identify specific site hazards and to determine the appro-

recycled paper

ecology

priate safety and health control procedures needed to protect employees from the identified hazards.

(2) *Preliminary evaluation.* A preliminary evaluation of a site's characteristics shall be performed prior to site entry by a qualified person in order to aid in the selection of appropriate employee protection methods prior to site entry. Immediately after initial site entry, a more detailed evaluation of the site's specific characteristics shall be performed by a qualified person in order to further identify existing site hazards and to further aid in the selection of the appropriate engineering controls and personal protective equipment for the tasks to be performed.

(3) *Hazard identification.* All suspected conditions that may pose inhalation or skin absorption hazards that are immediately dangerous to life or health (IDLH), or other conditions that may cause death or serious harm, shall be identified during the preliminary survey and evaluated during the detailed survey. Examples of such hazards include, but are not limited to, confined space entry, potentially explosive or flammable situations, visible vapor clouds, or areas where biological indicators such as dead animals or vegetation are located.

(4) *Required information.* The following information to the extent available shall be obtained by the employer prior to allowing employees to enter a site:

(i) Location and approximate size of the site.

(ii) Description of the response activity and/or the job task to be performed.

(iii) Duration of the planned employee activity.

(iv) Site topography and accessibility by air and roads.

(v) Safety and health hazards expected at the site.

(vi) Pathways for hazardous substance dispersion.

(vii) Present status and capabilities of emergency response teams that would provide assistance to hazardous waste clean-up site employees at the time of an emergency.

(viii) Hazardous substances and health hazards involved or expected at the site, and their chemical and physical properties.

(5) *Personal protective equipment.* Personal protective equipment (PPE) shall be provided and used during initial site entry in accordance with the following requirements:

(i) Based upon the results of the preliminary site evaluation, an ensemble of PPE shall be selected and used during initial site entry which will provide protection to a level of exposure below permissible exposure limits and published exposure levels for known or suspected hazardous substances and health hazards, and which will provide protection against other known and suspected hazards identified during the preliminary site evaluation. If there is no permissible exposure limit or published exposure level, the employer may use other published studies and information as a guide to appropriate personal protective equipment.

(ii) If positive pressure self-contained breathing apparatus is not used as part of the entry ensemble, and if respiratory protection is warranted by the potential hazards identified during the preliminary site evaluation, an escape self-contained breathing apparatus of at least five minute's duration shall be carried by employees during initial site entry.

(iii) If the preliminary site evaluation does not produce sufficient information to identify the hazards or suspected hazards of the site, an ensemble providing protection equivalent to Level B PPE shall be provided as minimum protection, and direct reading instruments shall be used as appropriate for identifying IDLH conditions. (See Appendix B for a description of Level B hazards and the recommendations for Level B protective equipment.)

(iv) Once the hazards of the site have been identified, the appropriate PPE shall be selected and used in accordance with paragraph (g) of this section.

(6) *Monitoring.* The following monitoring shall be conducted during initial site entry when the site evaluation produces information that shows the potential for ionizing radiation or IDLH conditions, or when the site in-

formation is not sufficient reasonably to eliminate these possible conditions:

(i) Monitoring with direct reading instruments for hazardous levels of ionizing radiation.

(ii) Monitoring the air with appropriate direct reading test equipment (i.e., combustible gas meters, detector tubes) for IDLH and other conditions that may cause death or serious harm (combustible or explosive atmospheres, oxygen deficiency, toxic substances).

(iii) Visually observing for signs of actual or potential IDLH or other dangerous conditions.

(iv) An ongoing air monitoring program in accordance with paragraph (h) of this section shall be implemented after site characterization has determined the site is safe for the start-up of operations.

(7) *Risk identification.* Once the presence and concentrations of specific hazardous substances and health hazards have been established, the risks associated with these substances shall be identified. Employees who will be working on the site shall be informed of any risks that have been identified. In situations covered by the Hazard Communication Standard, 29 CFR 1910.1200, training required by that standard need not be duplicated.

NOTE TO (c)(7).—Risks to consider include, but are not limited to:

(a) Exposures exceeding the permissible exposure limits and published exposure levels.

(b) IDLH concentrations.

(c) Potential skin absorption and irritation sources.

(d) Potential eye irritation sources.

(e) Explosion sensitivity and flammability ranges.

(f) Oxygen deficiency.

(8) *Employee notification.* Any information concerning the chemical, physical, and toxicologic properties of each substance known or expected to be present on site that is available to the employer and relevant to the duties an employee is expected to perform shall be made available to the affected employees prior to the commencement of their work activities. The employer may utilize information developed for the hazard communication standard for this purpose.

(d) *Site control*—(1) *General.* Appropriate site control procedures shall be implemented to control employee exposure to hazardous substances before clean-up work begins.

(2) *Site control program.* A site control program for protecting employees which is part of the employer's site safety and health program required in paragraph (b) of this section shall be developed during the planning stages of a hazardous waste clean-up operation and modified as necessary as new information becomes available.

(3) *Elements of the site control program.* The site control program shall, as a minimum, include: A site map; site work zones; the use of a "buddy system"; site communications including alerting means for emergencies; the standard operating procedures or safe work practices; and, identification of the nearest medical assistance. Where these requirements are covered elsewhere they need not be repeated.

(e) *Training*—(1) *General.* (i) All employees working on site (such as but not limited to equipment operators, general laborers and others) exposed to hazardous substances, health hazards, or safety hazards and their supervisors and management responsible for the site shall receive training meeting the requirements of this paragraph before they are permitted to engage in hazardous waste operations that could expose them to hazardous substances, safety, or health hazards, and they shall receive review training as specified in this paragraph.

(ii) Employees shall not be permitted to participate in or supervise field activities until they have been trained to a level required by their job function and responsibility.

(2) *Elements to be covered.* The training shall thoroughly cover the following:

(i) Names of personnel and alternates responsible for site safety and health;

(ii) Safety, health and other hazards present on the site;

(iii) Use of personal protective equipment;

(iv) Work practices by which the employee can minimize risks from hazards;

recycled paper

(v) Safe use of engineering controls and equipment on the site;

(vi) Medical surveillance requirements, including recognition of symptoms and signs which might indicate overexposure to hazards; and

(vii) The contents of paragraphs (G) through (J) of the site safety and health plan set forth in paragraph (b)(4)(ii) of this section.

(3) *Initial training.* (i) General site workers (such as equipment operators, general laborers and supervisory personnel) engaged in hazardous substance removal or other activities which expose or potentially expose workers to hazardous substances and health hazards shall receive a minimum of 40 hours of instruction off the site, and a minimum of three days actual field experience under the direct supervision of a trained, experienced supervisor.

(ii) Workers on site only occasionally for a specific limited task (such as, but not limited to, ground water monitoring, land surveying, or geo-physical surveying) and who are unlikely to be exposed over permissible exposure limits and published exposure limits shall receive a minimum of 24 hours of instruction off the site, and the minimum of one day actual field experience under the direct supervision of a trained, experienced supervisor.

(iii) Workers regularly on site who work in areas which have been monitored and fully characterized indicating that exposures are under permissible exposure limits and published exposure limits where respirators are not necessary, and the characterization indicates that there are no health hazards or the possibility of an emergency developing, shall receive a minimum of 24 hours of instruction off the site and the minimum of one day actual field experience under the direct supervision of a trained, experienced supervisor.

(iv) Workers with 24 hours of training who are covered by paragraphs (e)(3)(ii) and (e)(3)(iii) of this section, and who become general site workers or who are required to wear respirators, shall have the additional 16 hours and two days of training necessary to total the training specified in paragraph (e)(3)(i).

(4) *Management and supervisor training.* On-site management and supervisors directly responsible for, or who supervise employees engaged in, hazardous waste operations shall receive 40 hours initial training, and three days of supervised field experience (the training may be reduced to 24 hours and one day if the only area of their responsibility is employees covered by paragraphs (e)(3)(ii) and (e)(3)(iii)) and at least eight additional hours of specialized training at the time of job assignment on such topics as, but not limited to, the employer's safety and health program and the associated employee training program, personal protective equipment program, spill containment program, and health hazard monitoring procedure and techniques.

(5) *Qualifications for trainers.* Trainers shall be qualified to instruct employees about the subject matter that is being presented in training. Such trainers shall have satisfactorily completed a training program for teaching the subjects they are expected to teach, or they shall have the academic credentials and instructional experience necessary for teaching the subjects. Instructors shall demonstrate competent instructional skills and knowledge of the applicable subject matter.

(6) *Training certification.* Employees and supervisors that have received and successfully completed the training and field experience specified in paragraphs (e)(1) through (e)(4) of this section shall be certified by their instructor or the head instructor and trained supervisor as having successfully completed the necessary training. A written certificate shall be given to each person so certified. Any person who has not been so certified or who does not meet the requirements of paragraph (e)(9) of this section shall be prohibited from engaging in hazardous waste operations.

(7) *Emergency response.* Employees who are engaged in responding to hazardous emergency situations at hazardous waste clean-up sites that may expose them to hazardous substances shall be trained in how to respond to such expected emergencies.

(8) *Refresher training.* Employees specified in paragraph (e)(1) of this section, and managers and supervisors specified in paragraph (e)(4) of this section, shall receive eight hours of refresher training annually on the items specified in paragraph (e)(2) and/or (e)(4) of this section, any critique of incidents that have occurred in the past year that can serve as training examples of related work, and other relevant topics.

(9) *Equivalent training.* Employers who can show by documentation or certification that an employee's work experience and/or training has resulted in training equivalent to that training required in paragraphs (e)(1) through (e)(4) of this section shall not be required to provide the initial training requirements of those paragraphs to such employees. However, certified employees or employees with equivalent training new to a site shall receive appropriate, site specific training before site entry and have appropriate supervised field experience at the new site. Equivalent training includes any academic training or the training that existing employees might have already received from actual hazardous waste site work experience.

(f) *Medical surveillance*—(1) *General.* Employers engaged in operations specified in paragraphs (a)(1)(i) through (a)(1)(iv) of this section and not covered by (a)(2)(iii) exceptions and employers of employees specified in paragraph (q)(9) shall institute a medical surveillance program in accordance with this paragraph.

(2) *Employees covered.* The medical surveillance program shall be instituted by the employer for the following employees:

(i) All employees who are or may be exposed to hazardous substances or health hazards at or above the permissible exposure limits or, if there is no permissible exposure limit, above the published exposure levels for these substances, without regard to the use of respirators, for 30 days or more a year;

(ii) All employees who wear a respirator for 30 days or more a year or as required by § 1910.134;

(iii) All employees who are injured, become ill or develop signs or symptoms due to possible overexposure involving hazardous substances or health hazards from an emergency response or hazardous waste operation; and

(iv) Members of HAZMAT teams.

(3) *Frequency of medical examinations and consultations.* Medical examinations and consultations shall be made available by the employer to each employee covered under paragraph (f)(2) of this section on the following schedules:

(i) For employees covered under paragraphs (f)(2)(i), (f)(2)(ii), and (f)(2)(iv):

(A) Prior to assignment;

(B) At least once every twelve months for each employee covered unless the attending physician believes a longer interval (not greater than biennially) is appropriate;

(C) At termination of employment or reassignment to an area where the employee would not be covered if the employee has not had an examination within the last six months;

(D) As soon as possible upon notification by an employee that the employee has developed signs or symptoms indicating possible overexposure to hazardous substances or health hazards, or that the employee has been injured or exposed above the permissible exposure limits or published exposure levels in an emergency situation;

(E) At more frequent times, if the examining physician determines that an increased frequency of examination is medically necessary.

(ii) For employees covered under paragraph (f)(2)(iii) and for all employees including those of employers covered by paragraph (a)(1)(v) who may have been injured, received a health impairment, developed signs or symptoms which may have resulted from exposure to hazardous substances resulting from an emergency incident, or exposed during an emergency incident to hazardous substances at concentrations above the permissible exposure limits or the published exposure levels without the necessary personal protective equipment being used:

(A) As soon as possible following the emergency incident or development of signs or symptoms;

recycled paper

ecology a

(1) *Engineering controls, work practices and PPE for substances regulated in Subparts G and Z.* (i) Engineering controls and work practices shall be instituted to reduce and maintain employee exposure to or below the permissible exposure limits for substances regulated by 29 CFR Part 1910, to the extent required by Subpart Z, except to the extent that such controls and practices are not feasible.

NOTE TO (g)(1)(i): Engineering controls which may be feasible include the use of pressurized cabs or control booths on equipment, and/or the use of remotely operated material handling equipment. Work practices which may be feasible are removing all non-essential employees from potential exposure during opening of drums, wetting down dusty operations and locating employees upwind of possible hazards.

(ii) Whenever engineering controls and work practices are not feasible or not required, any reasonable combination of engineering controls, work practices and PPE shall be used to reduce and maintain employee exposures to or below the permissible exposure limits or dose limits for substances regulated by 29 CFR Part 1910, Subpart Z.

(iii) The employer shall not implement a schedule of employee rotation as a means of compliance with permissible exposure limits or dose limits except when there is no other feasible way of complying with the airborne or dermal dose limits for ionizing radiation.

(iv) The provisions of 29 CFR, Subpart G, shall be followed.

(2) *Engineering controls, work practices, and PPE for substances not regulated in Subparts G and Z.* An appropriate combination of engineering controls, work practices and personal protective equipment shall be used to reduce and maintain employee exposure to or below published exposure levels for hazardous substances and health hazards not regulated by 29 CFR Part 1910, Subparts G and Z. The employer may use the published literature and MSDS as a guide in making the employer's determination as to what level of protection the employer believes is appropriate for hazardous substances and health hazards for which there is no permissible exposure limit or published exposure limit.

(3) *Personal protective equipment selection.* (i) Personal protective equipment (PPE) shall be selected and used which will protect employees from the hazards and potential hazards they are likely to encounter as identified during the site characterization and analysis.

(ii) Personal protective equipment selection shall be based on an evaluation of the performance characteristics of the PPE relative to the requirements and limitations of the site, the task-specific conditions and duration, and the hazards and potential hazards identified at the site.

(iii) Positive pressure self-contained breathing apparatus, or positive pressure air-line respirators equipped with an escape air supply, shall be used when chemical exposure levels present will create a substantial possibility of immediate death, immediate serious illness or injury, or impair the ability to escape.

(iv) Totally-encapsulating chemical protective suits (protection equivalent to Level A protection as recommended in Appendix B) shall be used in conditions where skin absorption of a hazardous substance may result in a substantial possibility of immediate death, immediate serious illness or injury, or impair the ability to escape.

(v) The level of protection provided by PPE selection shall be increased when additional information on site conditions indicates that increased protection is necessary to reduce employee exposures below permissible exposure limits and published exposure levels for hazardous substances and health hazards. (See Appendix B for guidance on selecting PPE ensembles.)

NOTE TO (g)(3): The level of employee protection provided may be decreased when additional information or site conditions show that decreased protection will not result in hazardous exposures to employees.

(vi) Personal protective equipment shall be selected and used to meet the requirements of 29 CFR Part 1910, Subpart I, and additional requirements specified in this section.

(4) *Totally-encapsulating chemical protective suits.* (i) Totally-encapsulat-

40-109 O—90——13

(B) At additional times, if the examining physician determines that follow-up examinations or consultations are medically necessary.

(4) *Content of medical examinations and consultations.* (i) Medical examinations required by paragraph (f)(3) of this section shall include a medical and work history (or updated history if one is in the employee's file) with special emphasis on symptoms related to the handling of hazardous substances and health hazards, and to fitness for duty including the ability to wear any required PPE under conditions (i.e., temperature extremes) that may be expected at the work site.

(ii) The content of medical examinations or consultations made available to employees pursuant to paragraph (f) shall be determined by the attending physician. The guidelines in the *Occupational Safety and Health Guidance Manual for Hazardous Waste Site Activities* (See Appendix D, Reference #10) should be consulted.

(5) *Examination bv a physician and costs.* All medical examinations and procedures shall be performed by or under the supervision of a licensed physician, preferably one knowledgeable in occupational medicine, and shall be provided without cost to the employee, without loss of pay, and at a reasonable time and place.

(6) *Information provided to the physician.* The employer shall provide one copy of this standard and its appendices to the attending physician, and in addition the following for each employee:

(i) A description of the employee's duties as they relate to the employee's exposures.

(ii) The employee's exposure levels or anticipated exposure levels.

(iii) A description of any personal protective equipment used or to be used.

(iv) Information from previous medical examinations of the employee which is not readily available to the examining physician.

(v) Information required by § 1910.134.

(7) *Physician's written opinion.* (i) The employer shall obtain and furnish the employee with a copy of a written opinion from the attending physician containing the following:

(A) The physician's opinion as to whether the employee has any detected medical conditions which would place the employee at increased risk of material impairment of the employee's health from work in hazardous waste operations or emergency response, or from respirator use.

(B) The physician's recommended limitations upon the employee's assigned work.

(C) The results of the medical examination and tests if requested by the employee.

(D) A statement that the employee has been informed by the physician of the results of the medical examination and any medical conditions which require further examination or treatment.

(ii) The written opinion obtained by the employer shall not reveal specific findings or diagnoses unrelated to occupational exposures.

(8) *Recordkeeping.* (i) An accurate record of the medical surveillance required by paragraph (f) of this section shall be retained. This record shall be retained for the period specified and meet the criteria of 29 CFR 1910.20.

(ii) The record required in paragraph (f)(8)(i) of this section shall include at least the following information:

(A) The name and social security number of the employee;

(B) Physician's written opinions, recommended limitations, and results of examinations and tests;

(C) Any employee medical complaints related to exposure to hazardous substances;

(D) A copy of the information provided to the examining physician by the employer, with the exception of the standard and its appendices.

(g) *Engineering controls, work practices, and personal protective equipment for employee protection.* Engineering controls, work practices, personal protective equipment, or a combination of these shall be implemented in accordance with this paragraph to protect employees from exposure to hazardous substances and safety and health hazards.

ing suits shall protect employees from the particular hazards which are identified during site characterization and analysis.

(ii) Totally-encapsulating suits shall be capable of maintaining positive air pressure. (See Appendix A for a test method which may be used to evaluate this requirement.)

(iii) Totally-encapsulating suits shall be capable of preventing inward test gas leakage of more than 0.5 percent. (See Appendix A for a test method which may be used to evaluate this requirement.)

(5) *Personal protective equipment (PPE) program.* A written personal protective equipment program, which is part of the employer's safety and health program required in paragraph (b) of this section or required in paragraph (p)(1) of this section and which is also a part of the site-specific safety and health plan shall be established. The PPE program shall address the elements listed below. When elements, such as donning and doffing procedures, are provided by the manufacturer of a piece of equipment and are attached to the plan, they need not be rewritten into the plan as long as they adequately address the procedure or element.

(i) PPE selection based upon site hazards,

(ii) PPE use and limitations of the equipment,

(iii) Work mission duration,

(iv) PPE maintenance and storage,

(v) PPE decontamination and disposal,

(vi) PPE training and proper fitting,

(vii) PPE donning and doffing procedures,

(viii) PPE inspection procedures prior to, during, and after use,

(ix) Evaluation of the effectiveness of the PPE program, and

(x) Limitations during temperature extremes, heat stress, and other appropriate medical considerations.

(h) *Monitoring*—(1) *General.* (i) Monitoring shall be performed in accordance with this paragraph where there may be a question of employee exposure to hazardous concentrations of hazardous substances in order to assure proper selection of engineering controls, work practices and personal protective equipment so that employees are not exposed to levels which exceed permissible exposure limits, or published exposure levels if there are no permissible exposure limits, for hazardous substances.

(ii) Air monitoring shall be used to identify and quantify airborne levels of hazardous substances and safety and health hazards in order to determine the appropriate level of employee protection needed on site.

(2) *Initial entry.* Upon initial entry, representative air monitoring shall be conducted to identify any IDLH condition, exposure over permissible exposure limits or published exposure levels, exposure over a radioactive material's dose limits or other dangerous condition such as the presence of flammable atmospheres or oxygen-deficient environments.

(3) *Periodic monitoring.* Periodic monitoring shall be conducted when the possibility of an IDLH condition or flammable atmosphere has developed or when there is indication that exposures may have risen over permissible exposure limits or published exposure levels since prior monitoring. Situations where it shall be considered whether the possibility that exposures have risen are as follows:

(i) When work begins on a different portion of the site.

(ii) When contaminants other than those previously identified are being handled.

(iii) When a different type of operation is initiated (e.g., drum opening as opposed to exploratory well drilling).

(iv) When employees are handling leaking drums or containers or working in areas with obvious liquid contamination (e.g., a spill or lagoon).

(4) *Monitoring of high-risk employees.* After the actual clean-up phase of any hazardous waste operation commences; for example, when soil, surface water or containers are moved or disturbed; the employer shall monitor those employees likely to have the highest exposures to hazardous substances and health hazards likely to be present above permissible exposure limits or published exposure levels by using personal sampling frequently enough to characterize employee exposures. If the employees likely to

have the highest exposure are over permissible exposure limits or published exposure limits, then monitoring shall continue to determine all employees likely to be above those limits. The employer may utilize a representative sampling approach by documenting that the employees and chemicals chosen for monitoring are based on the criteria stated above.

NOTE TO (h): It is not required to monitor employees engaged in site characterization operations covered by paragraph (c) of this section.

(i) *Informational programs.* Employers shall develop and implement a program, which is part of the employer's safety and health program required in paragraph (b) of this section, to inform employees, contractors, and subcontractors (or their representative) actually engaged in hazardous waste operations of the nature, level and degree of exposure likely as a result of participation in such hazardous waste operations. Employees, contractors and subcontractors working outside of the operations part of a site are not covered by this standard.

(j) *Handling drums and containers*—(1) *General.* (i) Hazardous substances and contaminated soils, liquids, and other residues shall be handled, transported, labeled, and disposed of in accordance with this paragraph.

(ii) Drums and containers used during the clean-up shall meet the appropriate DOT, OSHA, and EPA regulations for the wastes that they contain.

(iii) When practical, drums and containers shall be inspected and their integrity shall be assured prior to being moved. Drums or containers that cannot be inspected before being moved because of storage conditions (i.e., buried beneath the earth, stacked behind other drums, stacked several tiers high in a pile, etc.) shall be moved to an accessible location and inspected prior to further handling.

(iv) Unlabelled drums and containers shall be considered to contain hazardous substances and handled accordingly until the contents are positively identified and labeled.

(v) Site operations shall be organized to minimize the amount of drum or container movement.

(vi) Prior to movement of drums or containers, all employees exposed to the transfer operation shall be warned of the potential hazards associated with the contents of the drums or containers.

(vii) U.S. Department of Transportation specified salvage drums or containers and suitable quantities of proper absorbent shall be kept available and used in areas where spills, leaks, or ruptures may occur.

(viii) Where major spills may occur, a spill containment program, which is part of the employer's safety and health program required in paragraph (b) of this section, shall be implemented to contain and isolate the entire volume of the hazardous substance being transferred.

(ix) Drums and containers that cannot be moved without rupture, leakage, or spillage shall be emptied into a sound container using a device classified for the material being transferred.

(x) A ground-penetrating system or other type of detection system or device shall be used to estimate the location and depth of buried drums or containers.

(xi) Soil or covering material shall be removed with caution to prevent drum or container rupture.

(xii) Fire extinguishing equipment meeting the requirements of 29 CFR Part 1910, Subpart L, shall be on hand and ready for use to control incipient fires.

(2) *Opening drums and containers.* The following procedures shall be followed in areas where drums or containers are being opened:

(i) Where an airline respirator system is used, connections to the source of air supply shall be protected from contamination and the entire system shall be protected from physical damage.

(ii) Employees not actually involved in opening drums or containers shall be kept a safe distance from the drums or containers being opened.

(iii) If employees must work near or adjacent to drums or containers being opened, a suitable shield that does not interfere with the work operation shall be placed between the employee and the drums or containers being

recycled paper

ecology a

opened to protect the employee in case of accidental explosion.

(iv) Controls for drum or container opening equipment, monitoring equipment, and fire suppression equipment shall be located behind the explosion-resistant barrier.

(v) When there is a reasonable possibility of flammable atmospheres being present, material handling equipment and hand tools shall be of the type to prevent sources of ignition.

(vi) Drums and containers shall be opened in such a manner that excess interior pressure will be safely relieved. If pressure can not be relieved from a remote location, appropriate shielding shall be placed between the employee and the drums or containers to reduce the risk of employee injury.

(vii) Employees shall not stand upon or work from drums or containers.

(3) *Material handling equipment.* Material handling equipment used to transfer drums and containers shall be selected, positioned and operated to minimize sources of ignition related to the equipment from igniting vapors released from ruptured drums or containers.

(4) *Radioactive wastes.* Drums and containers containing radioactive wastes shall not be handled until such time as their hazard to employees is properly assessed.

(5) *Shock sensitive wastes.* As a minimum, the following special precautions shall be taken when drums and containers containing or suspected of containing shock-sensitive wastes are handled:

(i) All non-essential employees shall be evacuated from the area of transfer.

(ii) Material handling equipment shall be provided with explosive containment devices or protective shields to protect equipment operators from exploding containers.

(iii) An employee alarm system capable of being perceived above surrounding light and noise conditions shall be used to signal the commencement and completion of explosive waste handling activities.

(iv) Continuous communications (i.e., portable radios, hand signals, telephones, as appropriate) shall be maintained between the employee-in-charge of the immediate handling area and both the site safety and health supervisor and the command post until such time as the handling operation is completed. Communication equipment or methods that could cause shock sensitive materials to explode shall not be used.

(v) Drums and containers under pressure, as evidenced by bulging or swelling, shall not be moved until such time as the cause for excess pressure is determined and appropriate containment procedures have been implemented to protect employees from explosive relief of the drum.

(vi) Drums and containers containing packaged laboratory wastes shall be considered to contain shock-sensitive or explosive materials until they have been characterized.

CAUTION: Shipping of shock sensitive wastes may be prohibited under U.S. Department of Transportation regulations. Employers and their shippers should refer to 49 CFR 173.21 and 173.50.

(6) *Laboratory waste packs.* In addition to the requirements of paragraph (j)(5) of this section, the following precautions shall be taken, as a minimum, in handling laboratory waste packs (lab packs):

(i) Lab packs shall be opened only when necessary and then only by an individual knowledgeable in the inspection, classification, and segregation of the containers within the pack according to the hazards of the wastes.

(ii) If crystalline material is noted on any container, the contents shall be handled as a shock-sensitive waste until the contents are identified.

(7) *Sampling of drum and container contents.* Sampling of containers and drums shall be done in accordance with a sampling procedure which is part of the site safety and health plan developed for and available to employees and others at the specific worksite.

(8) *Shipping and transport.* (i) Drums and containers shall be identified and classified prior to packaging for shipment.

(ii) Drum or container staging areas shall be kept to the minimum number necessary to identify and classify materials safely and prepare them for transport.

(iii) Staging areas shall be provided with adequate access and egress routes.

(iv) Bulking of hazardous wastes shall be permitted only after a thorough characterization of the materials has been completed.

(9) *Tank and vault procedures.* (i) Tanks and vaults containing hazardous substances shall be handled in a manner similar to that for drums and containers, taking into consideration the size of the tank or vault.

(ii) Appropriate tank or vault entry procedures as described in the employer's safety and health plan shall be followed whenever employees must enter a tank or vault.

(k) *Decontamination*—(1) *General.* Procedures for all phases of decontamination shall be developed and implemented in accordance with this paragraph.

(2) *Decontamination procedures.* (i) A decontamination procedure shall be developed, communicated to employees and implemented before any employees or equipment may enter areas on site where potential for exposure to hazardous substances exists.

(ii) Standard operating procedures shall be developed to minimize employee contact with hazardous substances or with equipment that has contacted hazardous substances.

(iii) All employees leaving a contaminated area shall be appropriately decontaminated; all contaminated clothing and equipment leaving a contaminated area shall be appropriately disposed of or decontaminated.

(iv) Decontamination procedures shall be monitored by the site safety and health supervisor to determine their effectiveness. When such procedures are found to be ineffective, appropriate steps shall be taken to correct any deficiencies.

(3) *Location.* Decontamination shall be performed in geographical areas that will minimize the exposure of uncontaminated employees or equipment to contaminated employees or equipment.

(4) *Equipment and solvents.* All equipment and solvents used for decontamination shall be decontaminated or disposed of properly.

(5) *Personal protective clothing and equipment.* (i) Protective clothing and equipment shall be decontaminated, cleaned, laundered, maintained or replaced as needed to maintain their effectiveness.

(ii) Employees whose non-impermeable clothing becomes wetted with hazardous substances shall immediately remove that clothing and proceed to shower. The clothing shall be disposed of or decontaminated before it is removed from the work zone.

(6) *Unauthorized employees.* Unauthorized employees shall not remove protective clothing or equipment from change rooms.

(7) *Commercial laundries or cleaning establishments.* Commercial laundries or cleaning establishments that decontaminate protective clothing or equipment shall be informed of the potentially harmful effects of exposures to hazardous substances.

(8) *Showers and change rooms.* Where the decontamination procedure indicates a need for regular showers and change rooms outside of a contaminated area, they shall be provided and meet the requirements of 29 CFR 1910.141. If temperature conditions prevent the effective use of water, then other effective means for cleansing shall be provided and used.

(l) *Emergency response by employees at uncontrolled hazardous waste sites*—(1) *Emergency response plan.* (i) An emergency response plan shall be developed and implemented by all employers within the scope of paragraphs (a)(1) (i)-(ii) of this section to handle anticipated emergencies prior to the commencement of hazardous waste operations. The plan shall be in writing and available for inspection and copying by employees, their representatives, OSHA personnel and other governmental agencies with relevant responsibilities.

(ii) Employers who will evacuate their employees from the danger area when an emergency occurs, and who do not permit any of their employees to assist in handling the emergency, are exempt from the requirements of this paragraph if they provide an emergency action plan complying with section 1910.38(a) of this part.

recycled paper

ecology an

(2) *Elements of an emergency response plan.* The employer shall develop an emergency response plan for emergencies which shall address, as a minimum, the following:

(i) Pre-emergency planning.

(ii) Personnel roles, lines of authority, and communication.

(iii) Emergency recognition and prevention.

(iv) Safe distances and places of refuge.

(v) Site security and control.

(vi) Evacuation routes and procedures.

(vii) Decontamination procedures which are not covered by the site safety and health plan.

(viii) Emergency medical treatment and first aid.

(ix) Emergency alerting and response procedures.

(x) Critique of response and follow-up.

(xi) PPE and emergency equipment.

(3) *Procedures for handling emergency incidents.* (i) In addition to the elements for the emergency response plan required in paragraph (1)(2) of this section, the following elements shall be included for emergency response plans:

(A) Site topography, layout, and prevailing weather conditions.

(B) Procedures for reporting incidents to local, state, and federal governmental agencies.

(ii) The emergency response plan shall be a separate section of the Site Safety and Health Plan.

(iii) The emergency response plan shall be compatible and integrated with the disaster, fire and/or emergency response plans of local, state, and federal agencies.

(iv) The emergency response plan shall be rehearsed regularly as part of the overall training program for site operations.

(v) The site emergency response plan shall be reviewed periodically and, as necessary, be amended to keep it current with new or changing site conditions or information.

(vi) An employee alarm system shall be installed in accordance with 29 CFR 1910.165 to notify employees of an emergency situation; to stop work activities if necessary; to lower background noise in order to speed communication; and to begin emergency procedures.

(vii) Based upon the information available at time of the emergency, the employer shall evaluate the incident and the site response capabilities and proceed with the appropriate steps to implement the site emergency response plan.

(m) *Illumination.* Areas accessible to employees shall be lighted to not less than the minimum illumination intensities listed in the following Table H-120.1 while any work is in progress:

TABLE H-120.1—MINIMUM ILLUMINATION INTENSITIES IN FOOT-CANDLES

Foot-candles	Area or operations
5	General site areas.
3	Excavation and waste areas, accessway active storage areas, loading platform refueling, and field maintenance areas.
5	Indoors: Warehouses, corridors, hallways, and exitways.
5	Tunnels, shafts, and general underground work areas. (Exception: Minimum of 10 foot-candles is required at tunnel and shaft heading during drilling mucking, and scaling. Mine Safety and Health Administration approved cap lights shall be acceptable for use in the tunnel heading.)
10	General shops (e.g., mechanical and electrical equipment rooms, active storerooms, barracks or living quarters, locker or dressing rooms, dining areas, and indoor toilets and workrooms.)
30	First aid stations, infirmaries, and offices.

(n) *Sanitation at temporary workplaces.*—(1) *Potable water.* (i) An adequate supply of potable water shall be provided on the site.

(ii) Portable containers used to dispense drinking water shall be capable of being tightly closed, and equipped with a tap. Water shall not be dipped from containers.

(iii) Any container used to distribute drinking water shall be clearly marked as to the nature of its contents and not used for any other purpose.

(iv) Where single service cups (to be used but once) are supplied, both a sanitary container for the unused cups and a receptacle for disposing of the used cups shall be provided.

(2) *Nonpotable water.* (i) Outlets fo nonpotable water, such as water foı firefighting purposes, shall be identi-

ATTACHMENT H
CONFINED SPACE

XA602 D3306

CONFINED-SPACE ENTRY
STANDARD OPERATING PROCEDURES

August 1993

Prepared for:

ECOLOGY AND ENVIRONMENT, INC.
368 Pleasantview Drive
Lancaster, New York 14086

ecology and environment, inc.
BUFFALO CORPORATE CENTER
368 PLEASANTVIEW DRIVE, LANCASTER, NEW YORK 14086, TEL. 716/684-8060
International Specialists in the Environment

recycled paper

ecology and environment

recycled paper

TABLE OF CONTENTS

Section		Page
1	INTRODUCTION	1-1
2	PURPOSE	2-1
3	ENTRY PROCEDURES	3-1
	3.1 LOCATION AND DESCRIPTION OF WORK	3-1
	3.2 POTENTIAL HAZARD IDENTIFICATION	3-1
	3.3 INITIAL ATMOSPHERIC HAZARD EVALUATION	3-2
	3.4 ATMOSPHERIC MONITORING DURING WORK PERFORMANCE	3-3
	3.5 ISOLATION	3-3
4	PERSONNEL	4-1
	4.1 GENERAL	4-1
	4.2 CSE TEAM	4-1
5	PERSONAL PROTECTIVE EQUIPMENT (PPE)	5-1
	5.1 GENERAL REQUIREMENTS FOR PPE	5-1
	5.2 SPECIAL CLOTHING	5-1
	5.3 RESPIRATORY PROTECTION	5-1
	5.4 APPROVED EQUIPMENT	5-2

Table of Contents (Cont.)

Section		Page
6	EMERGENCY PROCEDURES	6-1
7	TRAINING AND AUTHORIZATION	7-1
	7.1 TRAINING	7-1
	7.2 CSE REQUEST PROCEDURES	7-2
	7.3 CSE PERMIT	7-2
8	POST CSE PROCEDURES/RECORD KEEPING	8-1
9	REFERENCES	9-1

Appendix

A	CSE PERMIT REQUEST FORM AND INSTRUCTIONS	A-1
B	SITE-SPECIFIC CSE TRAINING FORM	B-1

recycled paper

ecology and environment

LIST OF ILLUSTRATIONS

Figure		Page
1-1	Examples of Confined Spaces	1-3
3-1	Toxic Gases and Substances	3-5
3-2	Oxygen Scale	3-6
3-3	The Ignition Triangle	3-7
3-4	Ventilation Patterns	3-8
3-5	Examples of Lockout	3-9
3-6	Lockout Tags	3-10
4-1	Entry with Hoists and Standby Personnel	4-5

02:XA002_D3306-08/17/93-F1
recycled paper

ecology and environment

1. INTRODUCTION

Ecology and Environment, Inc. (E & E) is involved in a variety of activities in which it may be necessary for personnel to enter a confined space such as a manhole, trench, tank, or in some instances, an entire building. Due to the many hazards associated with this type of work, confined-space entry (CSE) should be considered only as a last resort when work cannot be performed from a location outside of the confined space.

For the purpose of this standard operating procedure (SOP), a confined space is defined as a space large enough and so configured that an employee can bodily enter and perform assigned work, but which has limited or restricted means for entry or exit and is not designed for continuous employee occupancy.

Confined spaces may include, but are not limited to, storage tanks, process vessels, pits, silos, boilers, vats, degreasers, reaction vessels, ventilation and exhaust ducts, sewers, tunnels, underground utility vaults, tank cars, tank trailers, cooling towers, elevator pits, scrubbers, dryers, dust collectors, excavation, holes, caissons, coal and ash bunkers, large pipes, pipelines, or open top spaces more than 4 feet in depth such as tanks, pits, vaults, or vessels (see Figure 1-1).

Confined spaces are further divided into the following two categories:

1. Permit-required confined space (permit space), defined as:

   A confined space that has one or more of the following characteristics:

   - Contains or has a potential to contain hazardous atmosphere;
   - Contains a material that has the potential of engulfing an entrant;

recycled paper
02:XA602_D3306-08/17/93-F1
recycled paper

ecology and environment

- Has an internal configuration such that an entrant could be trapped or asphyxiated by inwardly converging walls or by a floor which slopes downward and tapers to a smaller cross-section; or

- Contains any other recognized serious safety or health hazard.

2. Non-permit confined space, defined as:

   - A confined space that does not contain, or with respect to atmospheric hazards, have the potential to contain, any hazard capable of causing death or serious physical harm.

All aspects of confined space hazards must be considered when preparing a work plan and site safety plan.

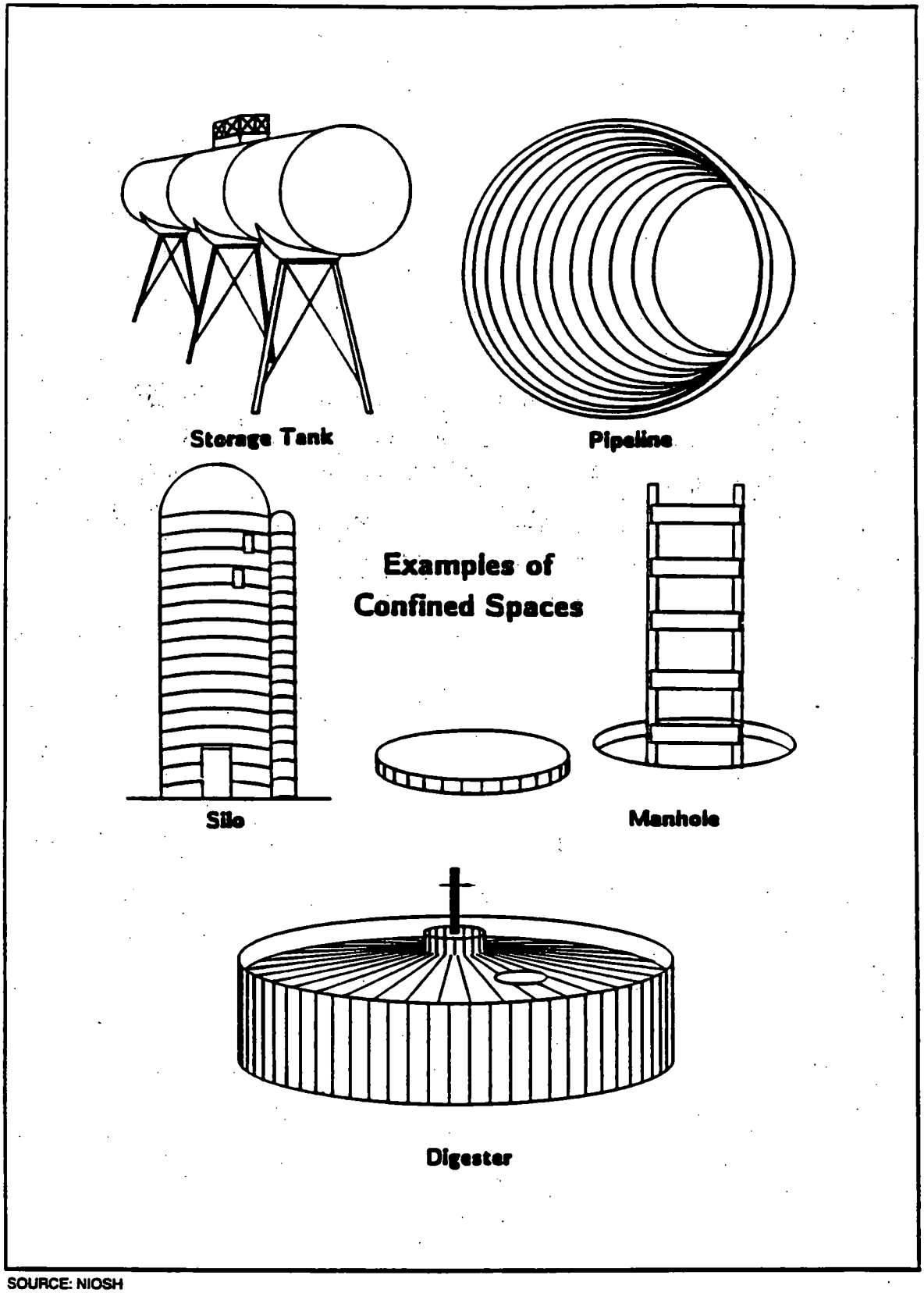

SOURCE: NIOSH

EXAMPLES OF CONFINED SPACES
Figure 1-1

recycled paper
recycled paper

ecology and environment
ecology and environment

2. PURPOSE

This SOP was developed by E & E to protect employee health and safety. This document establishes corporate procedures to protect E & E personnel from permit space hazards and to regulate entry into permit spaces. The contents of this document meet or exceed the requirements set forth in the Code of Federal Regulations (CFR) Title 29 Part 1910.146, entitled "Permit-Required Confined Spaces."

02:XA602_D3306-08/17/93-P1 recycled paper

ecology and environment

3. ENTRY PROCEDURES

E & E maintains a strict corporate policy consistent with 29 CFR 1910.146 that regulates entry into permit spaces. A CSE permit must be obtained to enter a permit space. CSE permits will be obtained from and approved by the corporate Health and Safety Division or their authorized designees (e.g., Regional Safety Coordinators).

The permitting system was established to identify, evaluate, and control potential hazards prior to entry. The permit is designed to lead field personnel to consider a variety of potential hazards and emergency situations that may not be obviously apparent. This section discusses some of the aspects of the CSE permit that should be considered prior to the initiation of any CSE activity.

3.1 LOCATION AND DESCRIPTION OF WORK

The overall site location and description of work to be performed play an important role in the development of a site safety plan for work in confined spaces. Items such as availability of water, remoteness of site, availability of emergency facilities, decontamination procedures, presence of cleaning solvents, welding fumes, etc., must be addressed.

3.2 POTENTIAL HAZARD IDENTIFICATION

All known and/or potential hazards associated with the work site must be evaluated and listed in the site safety plan and CSE permit application. These hazards include, but are not limited to: physical, chemical, biological, and radiological hazards (i.e., oxygen deficiency, explosive atmospheres, toxic airborne contaminants, heat/cold stress, limited visibility, and limited communications). Accurately identifying these hazards is the first step toward maintaining employee health and safety.

recycled paper
recycled paper
ecology and environment
ecology and environment

3.3 INITIAL ATMOSPHERIC HAZARD EVALUATION

Prior to entering a permit space, atmospheric monitoring must be conducted within the space using properly calibrated direct-reading instruments. Due to the potential for increased airborne contaminant concentrations at various depths within a confined space, measurements must be taken at regular depths (2-foot intervals) during entry from the top of a space to ensure that the work area is characterized accurately (see Figure 3-1). Oxygen levels shall be monitored first, followed by the measurement of flammable/explosive levels, because accurate measurement of combustible atmospheres is dependent on the presence of ambient oxygen levels. Finally, monitoring for toxic/hazardous substances should be conducted. The following parameters will be measured using remote instrumentation. Action levels for these parameters are:

- **Oxygen level** (19.5% to 22.0%): Entry is not permitted if oxygen levels are outside of the 19.5% to 22% range (see Figure 3-2);
- **Flammability and/or lower explosive limits (LEL)**: Entry is not permitted for LELs greater than 10% (see Figure 3-3); and
- **Toxic substance levels** (established for individual substances based on published occupational exposure limits [i.e., Permissible Exposure Limit (PEL), Threshold Limit Value (TLV)]): Detector tubes (i.e., Draeger tubes), cannot be used for remote monitoring. Toxic substance meters that are not intrinsically safe are not allowed into the confined space until remote oxygen and flammability monitoring are completed.

If any of the above measurements are outside the established action levels, the space is considered to contain a hazardous atmosphere. ENTRY INTO A HAZARDOUS ATMOSPHERE IS STRICTLY PROHIBITED.

Initial Hazardous Atmosphere Control Methods

Continuous forced air ventilation should be used to eliminate hazardous atmospheres prior to entry. The supply for the forced air ventilation must be from a clean source so the hazards within the space are not increased. The ventilating mechanism must also be directed at the entrant's immediate work area. The space should be ventilated continuously during entry and until all entrants leave the space. Direct reading air monitoring must be continued

periodically (as conditions warrant) to determine the efficiency of the ventilation system and compliance with the established action levels (see Figure 3-4).

Note: Ductwork should be placed so it does not block potential egress routes or inhibit rescue procedures.

3.4 ATMOSPHERIC MONITORING DURING WORK PERFORMANCE

Atmospheric monitoring will be conducted during all phases of work in a permit space. If an action level is exceeded (i.e., hazardous atmosphere detected) at any time during the entry operation, all entrants must immediately evacuate the space. The space must then be re-evaluated and the source of the hazardous condition identified. The appropriate control measures should then be implemented to eliminate or control the source and protect employees from hazardous atmospheres developing again within the permit space. Unless otherwise specified in the entry permit, a maximum of 15 minutes will be allowed for work in a confined space.

3.5 ISOLATION

If a confined space is within or part of an overall system, it must be isolated from the system prior to entry. Isolation from the overall system can be performed by:

- **Blanking:** The absolute closure of a pipe, line, or duct by the fastening of a solid plate that completely covers the opening and that is capable of withstanding the maximum pressure of the pipe, line, or duct.

- **Disconnection:** Complete disconnection of supply lines to the work area; and

- **Lockout/Tagout:** To ensure that a confined space remains isolated during all work activities, a lockout/tagout procedure must be employed prior to entry. Power or fuel systems must be shut off from their source, and locked in a closed position (see Figure 3-5). This procedure should eliminate accidental activation of systems, machinery, or release of energy that could threaten employee safety. At a minimum, the procedures shall meet the requirements of OSHA's lockout/tagout standard entitled "The Control of Hazardous Energy (Lockout/Tagout)" (29 CFR 1910.147).

recycled paper
02-XA602 D3306-08/17/93-F1
recycled paper

ecology and environment

All lockout/tagout devices should be attached and removed from the isolating device only by the employees entering the confined space (see Figure 3-6).

recycled paper

ecology and environment

NEVER TRUST YOUR SENSES TO DETERMINE IF THE AIR IN A CONFINED SPACE IS SAFE! YOU CAN NOT SEE OR SMELL MANY TOXIC GASES AND VAPORS, NOR CAN YOU DETERMINE THE LEVEL OF OXYGEN PRESENT.

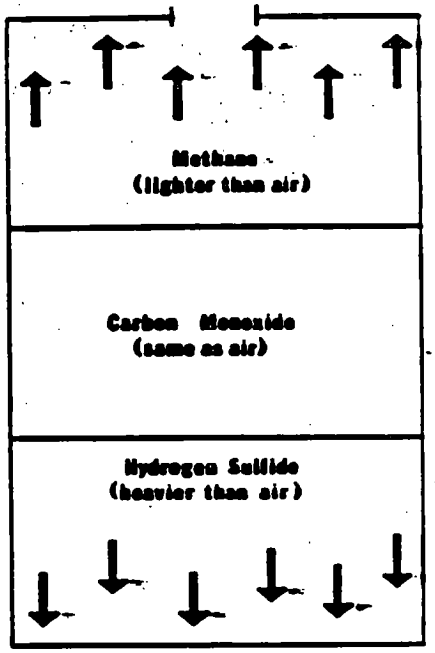

From the Outside, Top to Bottom

TOXIC GASES AND SUBSTANCES
Figure 3-1

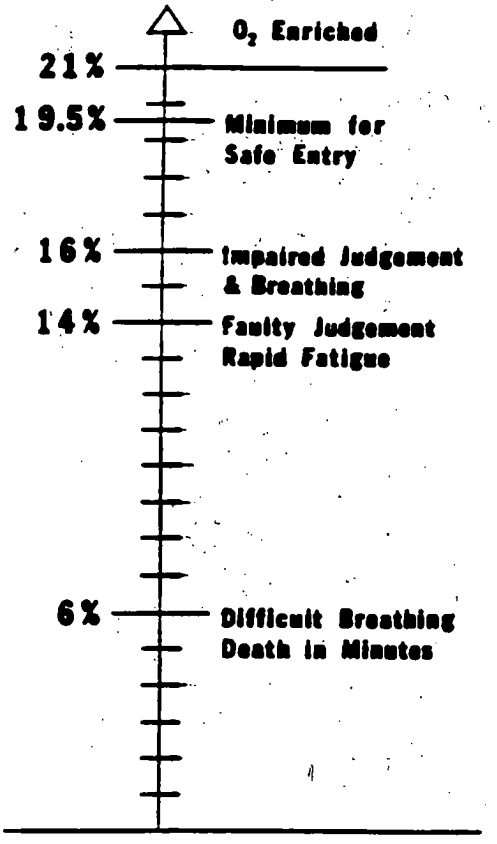

Oxygen Scale

OXYGEN SCALE
Figure 3-2

recycled paper

ecology and environment

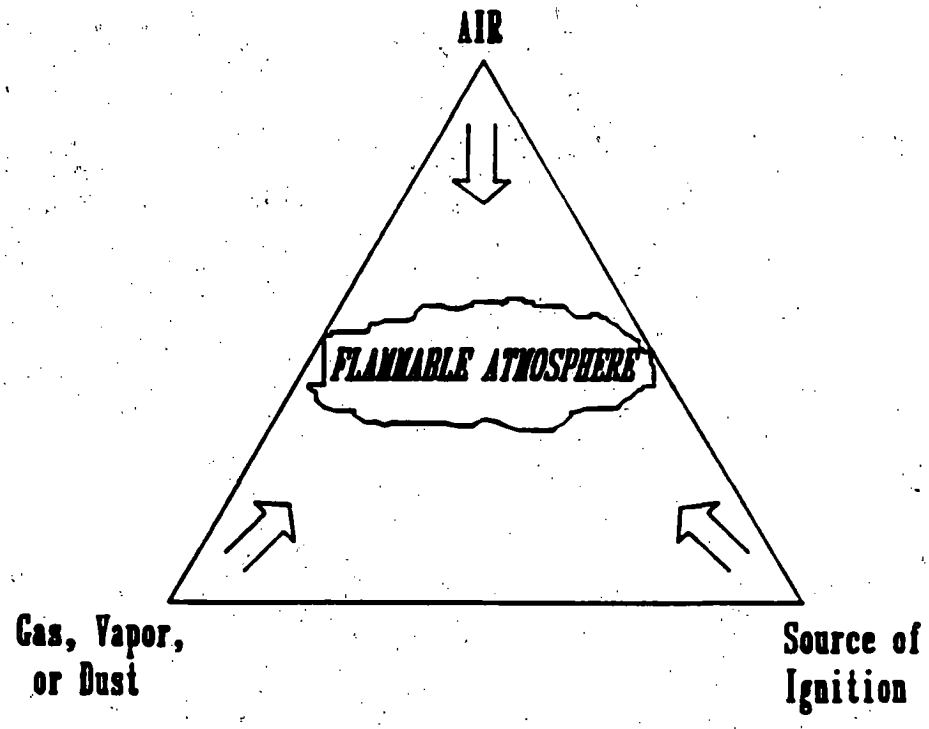

The Ignition Triangle

THE IGNITION TRIANGLE
Figure 3-3

recycled paper
recycled paper

ecology and environment
ecology and environment

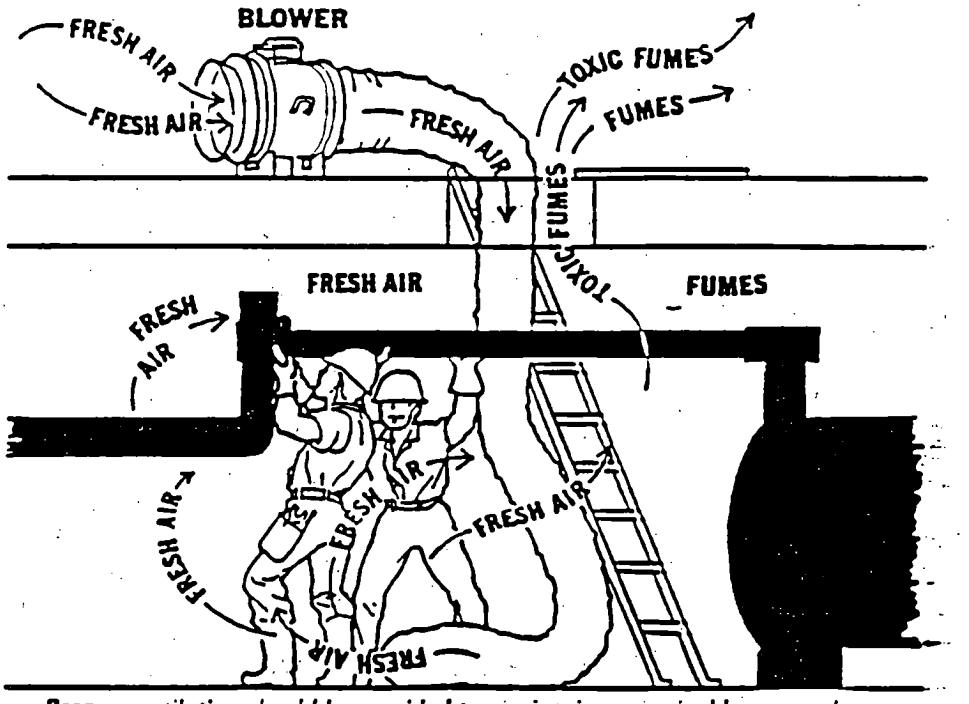

Proper ventilation should be provided to maintain a respirable atmosphere.

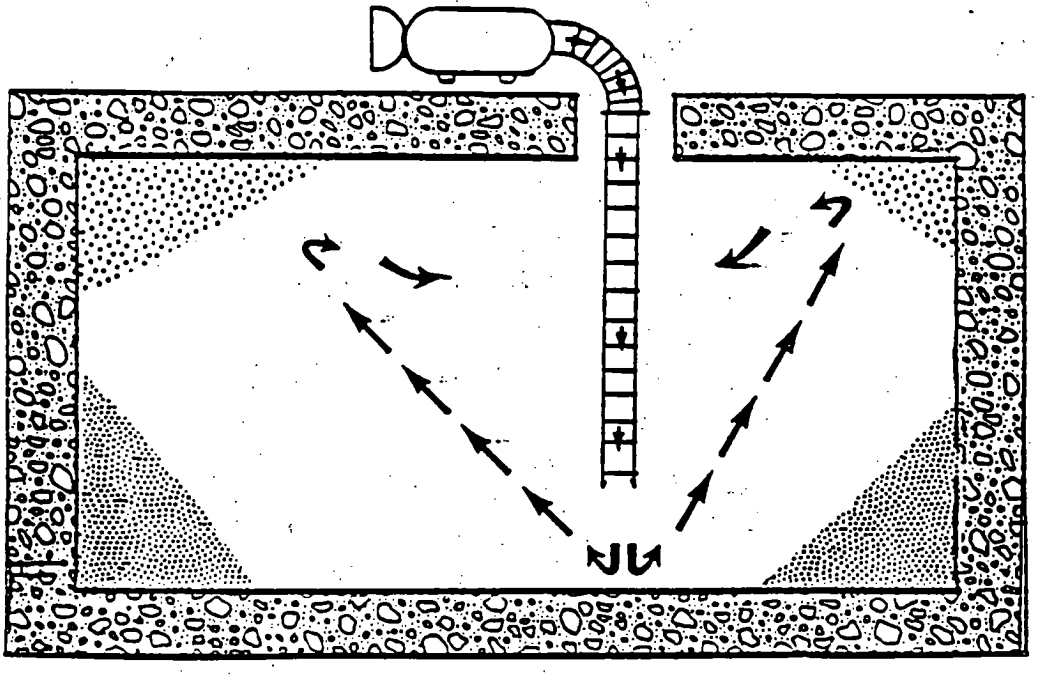

VENTILATION PATTERNS
Figure 3-4

recycled paper

ecology and environment

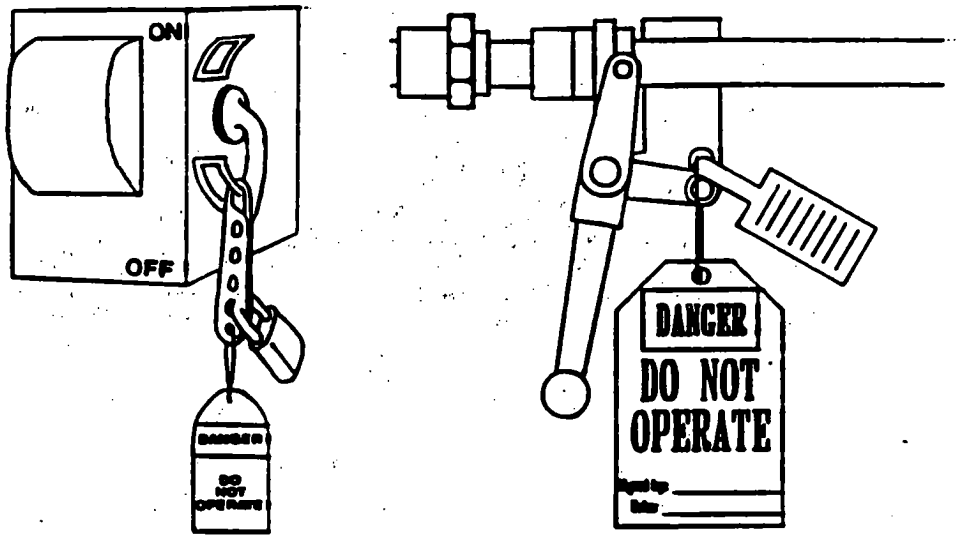

Examples of Lockout

EXAMPLES OF LOCKOUT
Figure 3-5

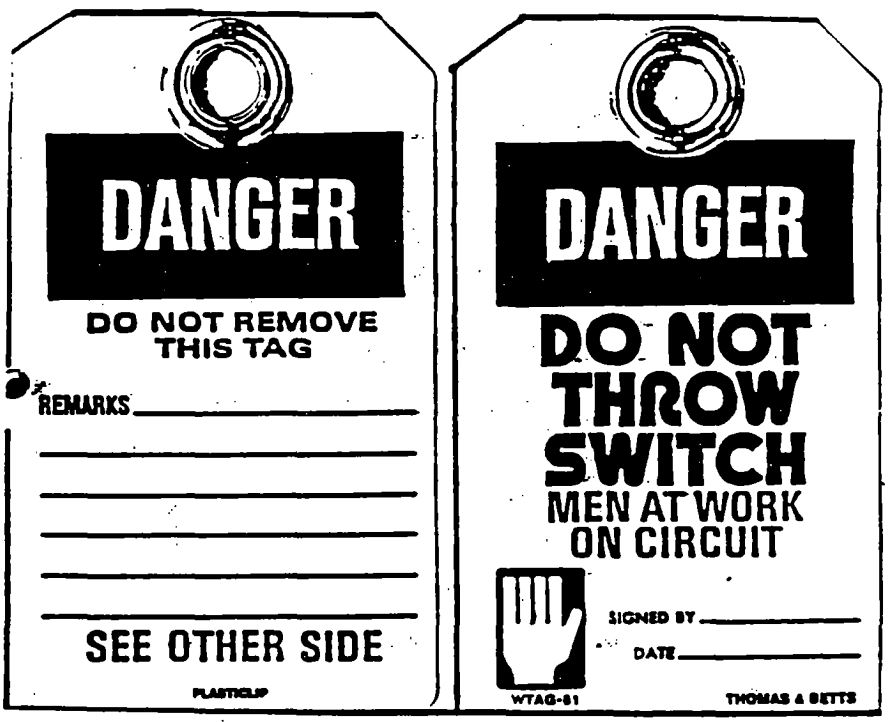

LOCKOUT TAGS
Figure 3-6

recycled paper

ecology and environment

4. PERSONNEL

4.1 GENERAL

All personnel will be trained for site activities and understand the limitations of protective equipment. Personnel should demonstrate an understanding of CSE procedures, their assigned duties, characteristics of the specific space to be entered, and emergency procedures prior to entry. All personnel assigned to CSE teams will also be enrolled in the E & E Corporate Medical Surveillance Program (see Training, Section 7).

4.2 CSE TEAM

CSE teams should consist of at least three members: an authorized entrant, an attendant, and an entry supervisor. All members will be trained and familiar with CSE procedures, associated safety equipment, and emergency procedures including first-aid and cardiopulmonary resuscitation (CPR). The two members of the team remaining outside the confined space should be selected according to their physical ability to perform a rescue in the event of an emergency (see Figure 4-1).

Authorized Entrant

The authorized entrant is the individual authorized to enter the confined space and perform the assigned task. The duties/responsibilities of the entrant include the following:

- Understand the hazards associated with the confined space entry and the sign, symptoms, and consequences of the exposure;
- Use the appropriate safety/personal protective equipment in a proper manner;
- Maintain adequate communications with the attendant;

recycled paper
recycled paper

ecology and environment

- Alert the attendant whenever a sign or symptom of exposure to a dangerous situation or a prohibited condition is detected;

- Exit the space as quickly as possible whenever:

  - The attendant or entry supervisor orders evacuation;

  - A sign or symptom of exposure to a dangerous situation is recognized;

  - A prohibited condition is detected; or

  - An evacuation alarm is sounded.

Attendant

The attendant is the individual stationed directly outside of the entryway to the permit space. The duties/responsibilities of the attendant include the following:

- Understand the hazards associated with the permit space entry and the signs, symptoms, and consequences of exposure;

- Recognize possible behavioral effects of hazard exposure in authorized entrants;

- Maintain an accurate count of authorized entrants and a method to identify who is in the permit space;

- Remain outside the entry way to the permit space for the duration of entry operations or until relieved by another attendant;

- Maintain communications with authorized entrant as necessary to monitor entrant status and to alert entrants to the need to evacuate the space;

- Monitor activities inside and outside the space to determine if it is safe for entrants to remain in the space (see Section 3.4 for air monitoring requirements);

- Order the authorized entrants to evacuate the space immediately under any of the following conditions:

  - The attendant detects a prohibited condition (e.g., air monitoring action levels are exceeded);

  - The attendant detects the behavioral effects of hazard exposure in an authorized entrant;

- The attendant detects a dangerous situation outside the space which could endanger the authorized entrants; or

- If the attendant cannot safely and efficiently perform the assigned duties;

- Summon rescue and other emergency services, as needed;

- Perform the following functions when entry is under way:

  - Warn unauthorized persons that they must stay away from the permit space;

  - Advise unauthorized persons that they must exit immediately if they have entered a permit space; and

  - Inform the authorized entrant and entry supervisor if unauthorized persons have entered the space;

- Perform non-entry rescue as specified on the CSE permit; and

- Do not perform any duties that might interfere with the attendants primary duty of monitoring and protecting the authorized entrant.

Entry Supervisor

The entry supervisor is responsible for implementing E & E's Confined Space Entry Standard Operating Procedures (CSE-SOP). The entry supervisor has authority over all members of the CSE team. The entry supervisor is also responsible for coordinating the CSE with the E & E health and safety staff. E & E's site safety coordinator will assume the responsibilities of entry supervisor or appoint a qualified individual. The specific duties of the entry supervisor include:

- Understand the hazards that may be encountered by the CSE team including the mode, signs or symptoms, and consequences of exposure to identified contaminants/hazards;

- Verify that all requirements of the CSE-SOP including all tests and procedures specified on the CSE permit have been conducted, and all the necessary safety equipment is in place;

- Allow entry to begin after obtaining authorization from E & E health and safety staff and signing the CSE permit;

recycled paper
02-XA602_D3306-08/17/93-F1
recycled paper

ecology and environment
ecology and environment

- Terminate the entry and cancel the CSE permit, complete post-entry permit comment section on CSE permit and submit to E & E's Regional Safety Coordinator;

- Verify that rescue services are available and adequately equipped to respond to potential CSE emergencies and the mode of communication to summon the rescue services are operable;

- Remove unauthorized individuals who enter or attempt to enter the permit space during entry operations; and

- Verify that entry procedures remain consistent with the terms specified in the CSE permit and CSE-SOP throughout the duration of the operation.

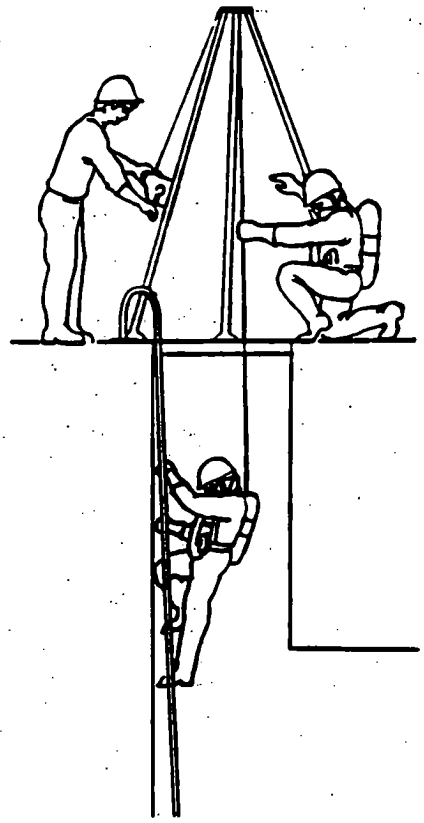

Entry with Hoist and Standby Personnel

ENTRY WITH HOIST AND STANDBY PERSONNEL
Figure 4-1

5. PERSONAL PROTECTIVE EQUIPMENT (PPE)

5.1 GENERAL REQUIREMENTS FOR PPE

E & E personnel must utilize appropriate Personal Protective Equipment (PPE) to reduce exposure to acceptable levels when engineering controls are unfeasible or ineffective. PPE for the proposed work will be identified in the site safety plan and the CSE permit. At minimum, the basic PPE must be worn at each site. This equipment includes safety glasses/face shield, hard hat, steel-toed/shank boots, and coveralls.

5.2 SPECIAL CLOTHING

Depending on the nature of the potential contamination and/or the proposed work to be accomplished, special protective clothing and equipment (gloves, booties, tyvek coveralls, respiratory protection, life vests, etc.) may be required. Necessary PPE will be specified in the approved site safety plan and CSE permit. The entry supervisor may request a modification of the protection levels specified in the plan as site conditions warrant, but appropriate approval must be received prior to implementing these changes. The entry supervisor is responsible for ensuring that the level of protection utilized by field personnel is consistent with the site safety plan. Personal protective clothing will be selected according to a worst-case exposure potential.

5.3 RESPIRATORY PROTECTION

Any use of respiratory protective equipment for CSE must be consistent with the requirements detailed in the E & E Corporate Respiratory Protection Program (which complies with 29 CFR 1910.134).

02-XA602_D3306-08/17/93-P1
recycled paper

ecology and environment

As stated in the corporate program, respirator selection will be based on a variety of factors including potential airborne contaminants. In situations where isolation is not possible (e.g., sewers, utility vaults, tunnels), rapid, unforeseen changes may occur in the work environment. In view of this unpredictability, a more conservative approach must be used to determine appropriate PPE levels. Work within a non-isolated permit space must be conducted using Level B respiratory protection. Standby personnel who are responsible for rescue will be equipped with self-contained breathing apparatus (SCBA) units; however, remote rescue procedures will always be attempted prior to entering a permit space for rescue purposes.

5.4 APPROVED EQUIPMENT

Retrieval Systems

E & E will provide a retrieval system or other method of performing non-entry rescue whenever an authorized entrant enters a permit space. In a special case where retrieval equipment would increase the overall hazard of entry or the equipment would not contribute to the rescue of the entrant, the entry supervisor may request this requirement be suspended from the E & E health and safety staff. Justification for suspending these requirements must be detailed on the permit and discussed with the CSE team prior to initiating any CSE activities.

Required Equipment

Each authorized entrant will be required to wear a chest or full body harness with a retrieval line (i.e., lifeline) attached to the entrant's back, near shoulder level, or above the entrant's head. Certain permit spaces make the use of a chest or full body harness infeasible or do not allow for effective rescue (e.g., limited entryway diameter and top entry). For these entry operations, wristlets will be used in place of the chest or full body harnesses to allow the entrant to be removed from the space through the restricted opening if rescue becomes necessary.

In order to facilitate non-entry rescue, a mechanical device will be available to allow the attendant to lift the authorized entrant out of any vertically accessed permit space more than 5 feet deep. The retrieval/lifeline shall be attached to the device prior to entry so rescue

recycled paper

ecology and environment

recycled paper

ecology and environment

can begin as soon as possible. If a mechanical retrieval device is not required for an entry, a retrieval/lifeline is still required and must be secured to a fixed point outside the permit space prior to entry. The attendant is responsible for securing and maintaining the retrieval/lifeline (see Figure 4-1).

Approved Tools

Depending on the nature of the potential contaminants and/or work to be undertaken in the confined space, spark-proof tools may be required.

Approved Electrical Equipment

Depending on the nature of the contaminants and/or work to be accomplished, electrical equipment used in a confined space should be explosion proof. All electrical equipment must be connected to ground fault circuit interrupters.

NOTE: ALL REQUIRED EQUIPMENT AND SAFETY PROVISIONS WILL BE SPECIFIED ON THE ENTRY PERMIT.

6. EMERGENCY PROCEDURES

Entry into a confined space for rescue purposes is a potentially life-threatening activity that should be attempted as a last resort only. Approximately one-half of all CSE fatalities are the result of emergency rescue attempts. If a rescue is necessary, it should be accomplished from outside the confined space using the attached retrieval/lifelines. The appropriate lines and harness type will be determined by the entry supervisor (see Section 5.4 for proper selection criteria).

Several circumstances allow for emergency entry into a confined space for rescue purposes. If the entry person receives a physical injury, not as a result of chemical exposure (i.e., heat stress, broken limb), and if external rescue would further injure the victim; then entry into the confined space would be prudent. The ability to evaluate the emergency situation accurately, and identify hazardous conditions depends on maintaining line of sight and constant verbal communication between the attendant and entry person(s). If neither the line of sight nor verbal communication can be maintained, operations should be suspended.

Prior to initiation of rescue entry, emergency medical assistance should be requested and additional standby personnel should be present at the confined space. The rescuer is also a potential victim and should observe more stringent safety precautions to avoid a similar incident.

Upon removing the victim from the confined space, life-saving first-aid should be administered, before decontamination and transport to a medical care facility. Basic first aid should be administered after decontamination.

Emergency rescue procedures are specific to each permit space and entry operation, therefore, the entry permit will detail the appropriate safety procedures for that entry operation.

recycled paper
recycled paper

The E & E corporate safety director should be notified of emergencies immediately. Emergency rescue must not be attempted by untrained personnel (see Section 7.1 for Training Requirements).

7. TRAINING AND AUTHORIZATION

7.1 TRAINING

E & E will provide training to all employees involved in CSE operations. The level of training will be based on the duties the employee is required to perform. All training will be conducted prior to the start of CSE operations.

E & E minimum training requirements for CSE participants:

- Completion of 40-hour Health and Safety Training and appropriate refresher training as required by 29 CFR 1910.120;
- Participation in E & E's Medical Surveillance Program;
- Successful completion of the most current E & E CSE Proficiency Exam (within 12 months);
- Current certification in cardiopulmonary resuscitation (CPR) and basic first aid by the American Red Cross (or equivalent);
- Completion of a practical exercise that simulates actual rescue in which participants remove dummies, manikins, or actual persons from a representative space (within 12 months); and
- Completion of a site-specific training session prior to entry, discussing all aspects of the entry and the permit system.

E & E will maintain records of all training sessions required by this section. These records will be available for review by employees and regulatory agencies, as appropriate.

recycled paper
recycled paper
ecology and environment
ecology and environment

7.2 CSE REQUEST PROCEDURES

CSE will be by permit only; therefore, standard procedures are necessary for the requisition of a CSE permit. The first page of the permit should be completed and submitted with the site safety plan to the Corporate Health and Safety Group or their designee for evaluation. CSE is recognized as a potentially hazardous operation that requires authorization by a qualified occupational health professional. Authorization will be granted only after all aspects of the CSE permit have been reviewed and discussed with the CSE team. Since authorization will be based upon the permit application, the safety of the CSE team may depend on the accuracy of the information provided by field personnel. Specific instructions for completing the CSE permit are located in Appendix A.

7.3 CSE PERMIT

The CSE permit contains important information concerning employee health and safety. The permit may also prove critical for verifying occupational exposure claims. Therefore, it should be completed and maintained in a legally defensible manner. The permit should remain with other project documentation and be available for review upon request. Appendix A contains the CSE permit, which is to be completed and submitted for authorization prior to the initiation of CSE.

8. POST-CSE PROCEDURES/RECORD KEEPING

Upon conclusion of a CSE operation, the entry supervisor will complete the post-entry comment section of the permit. These comments should identify any problems encountered during the entry or any suggestions for making future entries safer. The permit is then canceled and no further entry into the space is permitted. The original permit becomes a part of the project file and should be maintained accordingly. A copy of the canceled permit should be sent to E & E's Regional Safety Coordinator (RSC). The RSC will maintain all canceled permits received and will review those permits at least once every 12 months. Based on the review of the permits received, the RSC will make a formal recommendation for revising the CSE program, as necessary, to the Corporate Safety Director. This recommendation will also serve to document the annual review has occurred.

recycled paper
recycled paper

9. REFERENCES

American National Standards Institute (ANSI) 2117.1-1989, Safety Requirements for Confined Spaces.

Code of Federal Regulations (CFR), Title 29, Part 1910.146, entitled Permit-Required Confined Spaces.

Pettit, T. and H. Linn, 1987, A Guide to Safety in Confined Spaces, National Institute for Occupational Safety, Morgantown, West Virginia.

02-XA602_D3306-08/17/93-F1 recycled paper

ecology and environment

APPENDIX A

CSE PERMIT REQUEST FORM AND INSTRUCTIONS

recycled paper
recycled paper

ecology and environment

CONFINED SPACE ENTRY (CSE)
PERMIT REQUEST FORM AND INSTRUCTIONS

Page 1 - Confined Space Entry Permit

Prior to requesting approval and assignment of a CSE permit, all information on the front side of the permit request must be completed in ink. This information is designed for use by the requesting party as a reminder of the pertinent areas of concern associated with CSE. All areas of concern should be addressed completely in the site safety plan submitted with the permit request. Areas not addressed properly will result in the return of the permit request and site safety plan to the originator.

This permit must be submitted to and approved by E & E's Corporate Health and Safety Division or their authorized designees. CSE permits will be available with all testing results at each work area.

Page 2 - Inspections and Test Results

This portion of the CSE permit is to be completed at the start of each work shift by the monitoring officer, Site Safety Office (SSO), or his/her designee as follows:

Project Information

The project information noted on this page should not deviate from the information contained on the CSE permit (Page 1). Any deviation will require the re-issuance of a CSE permit.

Pre-entry Check List

Prior to worker entrance into a confined space, all applicable questions should be noted "yes". This check list covers basic requirements for confined space entry. It is intended to assist the Entry Supervisor and to be used in conjunction with pertinent federal, state, E & E regulations, and SOPs. Additional comments pertaining to check list items should be made at the bottom of this section. Pre-entry readings of the LEL, oxygen, and organic vapors must be noted where required.

Personnel Information

All personnel, duty descriptions, and entry/exit times will be noted. Persons entering a confined space must be advised of their specific duties and time constraints.

Test Results

Continual environmental monitoring of the confined space will be performed while personnel are working. Results of the LEL percentage, oxygen percentage, organic vapors, and other monitoring activities will be noted in this section. The Entry Supervisor will determine the frequency of monitoring according to the potential threat. The monitoring officer will initial all recorded results. The last test results logged into this section must coincide with the exit time of the last worker in the confined space. (Additional information should be noted on the back of the form.)

APPENDIX B

SITE-SPECIFIC CSE TRAINING FORMS

recycled paper
recycled paper

APPENDIX A

CSE PERMIT REQUEST FORM AND INSTRUCTIONS

recycled paper
recycled paper
recycled paper
ecology and environment
ecology and environment

CONFINED SPACE ENTRY (CSE)
PERMIT REQUEST FORM AND INSTRUCTIONS

Page 1 - Confined Space Entry Permit

Prior to requesting approval and assignment of a CSE permit, all information on the front side of the permit request must be completed in blue ink. This information is designed for use by the requesting party as a reminder of the pertinent areas of concern associated with CSE. All areas of concern should be addressed completely in the site safety plan submitted with the permit request.
Areas not addressed properly will result in the return of the permit request and site safety plan to the originator.

This permit must be submitted to and approved by E & E's Corporate Health and Safety Division or their authorized designees. CSE permits will be available with all testing results at each work area.

Page 2 - Inspections and Test Results

This portion of the CSE permit is to be completed at the start of each work shift by the monitoring officer, Site Safety Office (SSO), or his/her designee as follows:

Project Information

The project information noted on this page should not deviate from the information contained on the CSE permit (Page 1). Any deviation will require the re-issuance of a CSE permit.

Pre-entry Check List

Prior to worker entrance into a confined space, all applicable questions should be noted "yes". This check list covers basic requirements for confined space entry. It is intended to assist the SSO and to be used in conjunction with pertinent federal, state, Ecology & Environment regulations, and SOPs. Additional comments pertaining to check list items should be made at the bottom of this section. Pre-entry readings of the LEL, oxygen, and organic vapors must be noted where required.

Personnel Information

All personnel, duty descriptions, and entry/exit times will be noted. Persons entering a confined space must be advised of their specific duties and time constraints.

Test Results

Continual environmental monitoring of the confined space will be performed while personnel are working. Results of the LEL percentage, oxygen percentage, organic vapors, and other monitoring activities will be noted in this section. The SSO will determine the frequency of monitoring according to the potential threat. The monitoring officer will initial all recorded results. The last test results logged into this section must coincide with the exit time of the last worker in the confined space. (Additional information should be noted on the back of the form.)

recycled paper
ecology and environment

DRAFT

ECOLOGY & ENVIRONMENT INC.

CONFINED SPACE ENTRY PERMIT

(attach to Site Safety Plan)

PROJECT # _____ PROJECT NAME: _____

LOCATION: _____ TANK OR VESSEL (no./name): _____

DESCRIPTION OF HAZARDS: _____

DESCRIPTION OF WORK PLANNED: _____

START WORK DATE: _____ END WORK DATE: _____

PROJECT MANAGER: _____ SITE SAFETY OFFICER: _____

	YES (initial)	N/A (initial)
Work plan approved and attached	___	___
Site safety plan (including chem hazards) approved and attached	___	___
Heat/cold stress monitoring to be accomplished	___	___
Pre-entry and continuous monitoring of atmospheric conditions	___	___
Contingency plans prepared (communications, rescue)	___	___
Vessel contains leaded product	___	___

Personal Protection Level	Modifications
____ A. (SCBA, Encapsulation Suit)	_____
____ B. (SCBA, Dermal Modifications)	_____
____ C. (APR, Dermal Modifications)	_____

PERSONAL PROTECTION EQUIPMENT

____ Face Shield ____ Safety Glasses ____ Hard Hat ____ Boots
____ Gloves (Type _____) ____ Disposable booties
____ Body Protection (Type _____)

RESPIRATORY PROTECTION

____ SCBA ____ Airline ____ APR (cartridge type _____)
____ Emergency escape device (Type _____)

SITE-SPECIFIC SAFETY EQUIPMENT

____ Acid Splash Suit ____ Apron (Type _____) ____ Hearing Protection

SAFETY EQUIPMENT

____ Parachute Harness and Lifeline (top entry)
____ Wrist Harness and Lifeline (top entryway less than 18 inch diameter)
____ Chest Harness and Lifeline (side entry)
____ Other (_____)

REQUEST DATE: _____ NAME: _____ TITLE: _____

CORPORATE HEALTH AND SAFETY AUTHORIZATION: _____ SIGNATURE: _____

recycled paper
ecology and environment

ECOLOGY & ENVIRONMENT INC.
INSPECTIONS AND TESTS FOR
CONFINED SPACE ENTRY

This section will be updated/renewed at the start of each work shift.

PROJECT #_____ TANK OR VESSEL (no./name): _____ TYPE OF MATERIAL: _____

DESCRIPTION OF WORK PLANNED: _____
(Any deviations of above information from original permit request will require the re-issuance of CSE permit.)

PRE-ENTRY CHECK LIST

	YES (initial)	N/A
All product lines to/from confined space are disconnected, blanked and/or tagged	___	___
Electrical service disconnected/locked out	___	___
All grounding and bonding wire in place	___	___
All ignition sources isolated	___	___
Complete respiratory system checked and in proper condition	___	___
Safety harnesses/life lines checked and in proper condition	___	___
Required protective clothing being used	___	___
Workers trained in use, care and limits of protective equipment	___	___
Outside safety watch trained in emergency procedures and cardiopulmonary resuscitation	___	___
All emergency systems (alarms, extinguishers etc.) on line	___	___
Special warning/caution signs posted	___	___
Ventilation equipment in use	___	___
Employees have currently valid medical examinations	___	___
Pre-Entry Readings: LEL-_____% (<20%) O^2-_____% (19.5 - 22.0%) OVA/Hnu-_____ _____ (Action levels)	Initial ___	

PERSONNEL ENTERING CONFINED SPACE

NAME:	DESCRIPTION OF DUTIES	TIME IN	TIME OUT

TEST RESULTS

TIME	LEL%	OXYGEN%	OVA	HNU	Draeger Tubes (type)	Draeger Tubes (ppm)	Personal sampling/other indicators				INITIALS

Monitoring Officer: _____
(please print)

APPENDIX B

SITE-SPECIFIC CSE TRAINING FORMS

recycled paper
recycled paper
recycled paper
ecology and environment
ecology and environment

SITE-SPECIFIC CSE TRAINING FORMS

Project Name: _____ Date: _____

Location: _____

Description of CS/LE Area: _____

Description of Work: _____

Known Hazardous Contaminants: _____

CSE PERMIT REVIEW

_____ Level of personal protection for each team member.

_____ Safety equipment to be used.

_____ Individual responsibilities (worker, stand-by, safety officer).

_____ Rescue procedures.

_____ Pre-entry check list.

_____ Monitoring instruments, action levels, frequency of monitoring.

_____ Communications (i.e., constant visual contact-hand signals, radio contact).

_____ Acute symptoms of exposure to known or suspected contaminants.

_____ Corporate health and safety approval.

Comments/Suggestions by CSE Team:

_____

_____

The following individuals have reviewed the above information and understand their assigned responsibilities:

Printed Name	Duties	Signature/Date

recycled paper
recycled paper
recycled paper

ecology and environment
ecology and environment

ATTACHMENT I
DRUM HANDLING

11. Handling Drums and Other Containers

Contents

Introduction 11-1

Inspection 11-1

Planning 11-3

Handling 11-3

- Drums Containing Radioactive Waste 11-4
- Drums that May Contain Explosive or Shock-Sensitive Wastes 11-4
- Bulging Drums 11-4
- Drums Containing Packaged Laboratory Wastes (Lab Packs) 11-4
- Leaking, Open, and Deteriorated Drums 11-4
- Buried Drums 11-5

Opening 11-5

Sampling 11-6

Characterization 11-7

Staging 11-8

Bulking 11-9

Shipment 11-9

Special Case Problems 11-11

- Tanks and Vaults 11-11
- Vacuum Trucks 11-12
- Elevated Tanks 11-12
- Compressed Gas Cylinders 11-12
- Ponds and Lagoons 11-12

References 11-12

Introduction

Accidents may occur during handling of drums and other hazardous waste containers. Hazards include detonations, fires, explosions, vapor generation, and physical injury resulting from moving heavy containers by hand and working around stacked drums, heavy equipment, and deteriorated drums. While these hazards are always present, proper work practices—such as minimizing handling and using equipment and procedures that isolate workers from hazardous substances—can minimize the risks to site personnel.

This chapter defines practices and procedures for safe handling of drums and other hazardous waste containers. It is intended to aid the Project Team Leader in setting up a waste container handling program. In addition to reading this chapter, the Project Team Leader should also be aware of all pertinent regulations. OSHA regulations (29 CFR Parts 1910 and 1926) include general requirements and standards for storing, containing, and handling chemicals and containers, and for maintaining equipment used for handling materials. EPA regulations (40 CFR Part 265) stipulate requirements for types of containers, maintenance of containers and containment structures, and [illegible]n and maintenance of storage areas. DOT regulations (49 CFR Parts 171 through 178) [illegible] stipulate requirements for containers and procedures for shipment of hazardous wastes.

Containers are handled during characterization and removal of their contents and during other operations. A flow chart showing one set of possible procedures for drum handling is given in Figure 11-1. Guidance for safely performing the procedures shown in Figure 11-1 is provided in the following sections of this chapter. The final section, *Special Case Problems*, describes the handling of tanks, vaults, vacuum trucks, elevated tanks, and compressed gas cylinders.

Inspection

The appropriate procedures for handling drums depend on the drum contents. Thus, prior to any handling, drums should be visually inspected to gain as much information as possible about their contents. The inspection crew should look for:

- Symbols, words, or other marks on the drum indicating that its contents are hazardous, e.g., radioactive, explosive, corrosive, toxic, flammable.
- Symbols, words, or other marks on a drum indicating that it contains discarded laboratory chemicals, reagents, or other potentially dangerous materials in small-volume individual containers (see Table 11-1).
- Signs of deterioration such as corrosion, rust, and leaks.
- Signs that the drum is under pressure such as s[illegible]ing and bulging.
- Drum type (see Table 11-1).
- Configuration of the drumhead (see Table 11-2).

Conditions in the immediate vicinity of the drums may provide information about drum contents and their associated hazards. Monitoring should be conducted around the drums using instruments such as a gamma radiation survey instrument, organic vapor monitors, and a combustible gas meter.

The results of this survey can be used to classify the drums into preliminary hazard categories, for example:

- Radioactive.
- Leaking/deteriorated.
- Bulging.
- Explosive/shock-sensitive.
- Contains small-volume individual containers of laboratory wastes or other dangerous materials.

As a precautionary measure, personnel should assume that unlabelled drums contain hazardous materials until their contents are characterized. Also, they should [illegible] in mind that drums are frequently mislabelled—particularly drums that are reused. Thus, a drum's label may not accurately describe its contents.

If buried drums are suspected, ground-penetrating sy[illegible]tems, such as electromagnetic wave, electrical resistivity, ground-penetrating radar, magnetometry, and metal detection, can be used to estimate the location and depth of the drums.

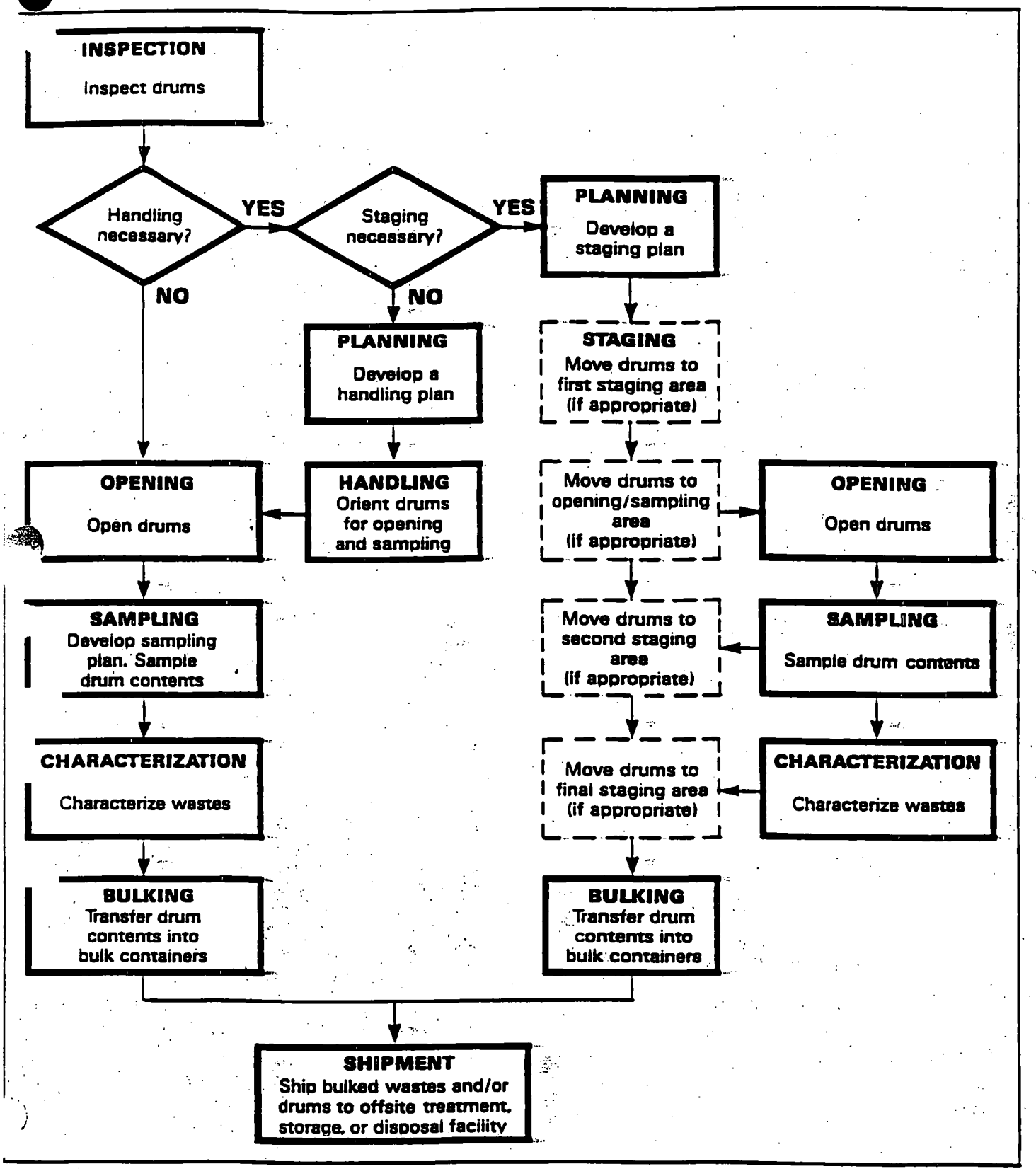

ure 11-1. Flow Chart for Drum Handling. (Dashed boxes indicate optional steps. Number of staging areas necessary is site specific.)

Table 11-1. Special Drum Types and Their Associated Hazards

Polyethylene or PVC-Lined Drums	Often contain strong acids or bases. If the lining is punctured, the substance usually quickly corrodes the steel, resulting in a significant leak or spill.
Exotic Metal Drums (e.g., aluminum, nickel, stainless, steel, or other unusual metal)	Very expensive drums that usually contain an extremely dangerous material.
Single-Walled Drums Used as a Pressure Vessel	These drums have fittings for both product filling and placement of an inert gas, such as nitrogen. May contain reactive, flammable, or explosive substances.
Laboratory Packs	Used for disposal of expired chemicals and process samples from university laboratories, hospitals, and similar institutions. Individual containers within the lab pack are often not packed in absorbent material. They may contain incompatible materials, radioisotopes, shock-sensitive, highly volatile, highly corrosive, or very toxic exotic chemicals. Laboratory packs can be an ignition source for fires at hazardous waste sites.

Table 11-2. Information Provided by Drumhead Configuration

CONFIGURATION	INFORMATION
Whole lid removable.	Designed to contain solid material.
Has a bung.	Designed to contain a liquid.
Contains a liner.	May contain a highly corrosive or otherwise hazardous material.

Planning

Since drum handling is fraught with danger, every step of the operation should be carefully planned, based on all the information available at the time. The results of the preliminary inspection can be used to determine (1) if any hazards are present and the appropriate response, and (2) which drums need to be moved in order to be opened and sampled. A preliminary plan should be developed which specifies the extent of handling necessary, the personnel selected for the job, and the most appropriate procedures based on the hazards associated with the probable drum contents as determined by visual inspection. This plan should be revised as new information is obtained during drum handling.

Handling

The purpose of handling is to (1) respond to any obvious problems that might impair worker safety, such as radio- to facilitate characterization and remedial action (see *Staging* in this chapter). Handling may or may not be necessary, depending on how the drums are positioned at a site.

Since accidents occur frequently during handling, particularly initial handling, drums should only be handled if necessary. Prior to handling, all personnel should be warned about the hazards of handling, and instructed to minimize handling as much as possible and to avoid unnecessary handling. In all phases of handling, personnel should be alert for new information about potential hazards. These hazards should be responded to before continuing with more routine handling operations. Overpack drums (larger drums in which leaking or damaged drums are placed for storage or shipment (see 49 CFR Part 173.3(c)) and an adequate volume of absorbent should be kept near areas where minor spills may occur. Where major spills may occur, a containment berm adequate to contain the entire volume of liquid in the drums should be constructed before any handling takes place. If the drum contents spill, personnel trained in spill response should be used to isolate and contain the spill.

Several types of equipment can be used to move drums: (1) A drum grappler attached to a hydraulic excavator; (2) a small front-end loader, which can be either loaded manually or equipped with a bucket sling; (3) a rough terrain forklift; (4) a roller conveyor equipped with solid rollers; and (5) drum carts designed specifically for drum handling. Drums are also sometimes moved manually. The drum grappler is the preferred piece of equipment for drum handling. It keeps the operator removed from the drums so that there is less likelihood of injury if the drums detonate or rupture. If a drum is leaking, the operator can stop the leak by rotating the drum and immediately placing it into an overpack. In case of an explosion, grappler claws help protect the operator by partially deflecting the force of the explosion.

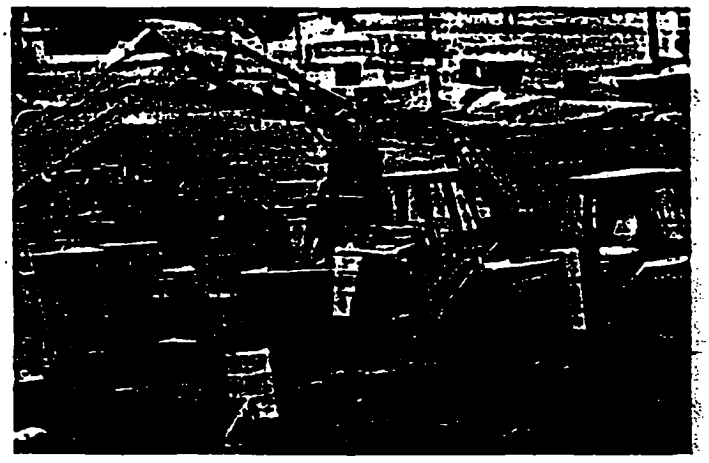

Backhoe with drum grappler.

The following procedures can be used to maximize worker safety during drum handling and movement:

- Train personnel in proper lifting and moving techniques to prevent back injuries.

ake sure the vehicle can operate smoothly on the ailable road surface.

- Air condition the cabs of vehicles to increase operator efficiency; protect the operator with heavy splash shields.
- Supply operators with appropriate respiratory protective equipment when needed. Normally either a combination SCBA/SAR with the air tank fastened to the vehicle, or an airline respirator and an escape SCBA are used because of the high potential hazards of drum handling. This improves operator efficiency and provides protection in case the operator must abandon the equipment.
- Have overpacks ready before any attempt is made to ... drums.

  ...re moving anything, determine the most appropriate sequence in which the various drums and other containers should be moved. For example, small containers may have to be removed first to permit heavy equipment to enter and move the drums.
- Exercise extreme caution in handling drums that are not intact and tightly sealed.
- Ensure that operators have a clear view of the roadway when carrying drums. Where necessary, have ground workers available to guide the operator's motion.

Dr... Containing Radioactive Waste

- If the drum exhibits radiation levels above background (see Table 6-2), immediately contact a health physicist. Do *not* handle any drums that are determined to be radioactive until persons with expertise in this area have been consulted.

Drums that May Contain Explosive or Shock-Sensitive Waste

- If a drum is suspected to contain explosive or shock-sensitive waste as determined by visual inspection, seek specialized assistance before any handling.
- If handling is necessary, handle these drums with *extreme caution*.
- Prior to handling these drums, make sure all non-essential personnel have moved a safe distance away.
- Use a grappler unit constructed for explosive containment for initial handling of such drums.
- Palletize the drums prior to transport. Secure drums to pallets.

  Use an audible siren signal system, similar to that employed in conventional blasting operations, to signal the commencement and completion of explosive waste handling activities.
- Maintain continuous communication with the Site Safety Officer and/or the command post until drum handling operations are complete.

recycled paper

Bulging Drums

under internal pressure, as evidenced by bulging or swelling.

- If a pressurized drum has to be moved, whenever possible handle the drum with a grappler unit constructed for explosive containment. Either move the bulged drum only as far as necessary to allow seating on firm ground, or carefully overpack the drum. Exercise extreme caution when working with or adjacent to potentially pressurized drums.

Drums Containing Packaged Laboratory Wastes (Lab Packs)

Laboratory packs (i.e., drums containing individual containers of laboratory materials normally surrounded by cushioning absorbent material) can be an ignition source for fires at hazardous waste sites. They sometimes contain shock-sensitive materials. Such containers should be considered to hold explosive or shock-sensitive wastes until otherwise characterized. If handling is required, the following precautions are among those that should be taken:

- Prior to handling or transporting lab packs, make sure all non-essential personnel have moved a safe distance away.
- Whenever possible, use a grappler unit constructed for explosive containment for initial handling of such drums.
- Maintain continuous communication with the Site Safety Officer and/or the command post until handling operations are complete.
- Once a lab pack has been opened, have a chemist inspect, classify, and segregate the bottles within it, without opening them, according to the hazards of the wastes. An example of a system for classifying lab pack wastes is provided in Table 11-3. The objective of a classification system is to ensure safe segregation of the lab packs' contents. Pack these bottles with sufficient cushioning and absorption materials to prevent excessive movement of the bottles and to absorb all free liquids, and ship them to an approved disposal facility.
- If crystalline material is noted at the neck of any bottle, handle it as a shock-sensitive waste, due to the potential presence of picric acid or other similar material, and get expert advice before attempting to handle it.
- Palletize the repacked drums prior to transport. Secure the drums to pallets.

Leaking, Open, and Deteriorated Drums

- If a drum containing a liquid cannot be moved without rupture, immediately transfer its contents to a sound drum using a pump designed for transfering that liquid.
- Using a drum grappler, place immediately in overpack containers:

  Leaking drums that contain sludges or semi-solids.

  Open drums that contain liquid or solid waste.

Table 11-3. Example of Lab Pack Content Classification System for Disposal

CLASSIFICATION	EXAMPLES
Inorganic acids	Hydrochloric Sulfuric
Inorganic bases	Sodium hydroxide Potassium hydroxide
Strong oxidizing agents	Ammonium nitrate Barium nitrate Sodium chlorate Sodium peroxide
Strong reducing agents	Sodium thiosulfate Oxalic acid Sodium sulphite
Anhydrous organics and organometallics	Tetraethyl lead Phenylmercuric chloride
Anhydrous inorganics and metal hydrides	Potassium hydride Sodium hydride Sodium metal Potassium
Toxic organics	PCBs Insecticides
Flammable organics	Hexane Toluene Acetone
Inorganics	Sodium carbonate Potassium chloride
Inorganic cyanides	Potassium cyanide Sodium cyanide Copper cyanide
Organic cyanides	Cyanoacetamide
Toxic metals	Arsenic Cadmium Lead Mercury

Buried Drums

- Prior to initiating subsurface excavation, use ground-penetrating systems to estimate the location and depth of the drums (see *Inspection* in this chapter).
- Remove soil with great caution to minimize the potential for drum rupture.
- Have a dry chemical fire extinguisher on hand to control small fires.

Opening

Drums are usually opened and sampled in place during site investigations. However, remedial and emergency operations may require a separate drum opening area (see *Staging* in this chapter). Procedures for opening drums are the same, regardless of where the drums are opened. To enhance the efficiency and safety of drum-opening personnel, the following procedures should be instituted.

- If a supp[illegible] air respiratory protection system is used, place a bank of air cylinders outside the work area
- Protect personnel by keeping them at a safe distance from the drums being opened. If personnel must be located near the drums, place explosion-resistant plastic shields between them and the drums to protect them in case of detonation. Locate controls for drum opening equipment, monitoring equipment, and fire suppression equipment behind the explosion-resistant plastic shield.
- If possible, monitor continuously during opening. Place sensors of monitoring equipment, such as colorimetric tubes, dosimeters, radiation survey instruments, explosion meters, organic vapor analyzers, and oxygen meters, as close as possible to the source of contaminants, i.e., at the drum opening.
- Use the following remote-controlled devices for opening drums:

  Pneumatically operated impact wrench to remove drum bungs.

  Hydraulically or pneumatically operated drum piercers (see Figure 11-2).

  Backhoes equipped with bronze spikes for penetrating drum tops in large-scale operations (see Figure 11-3).
- Do *not* use picks, chisels and firearms to open drums.
- Hang or balance the drum opening equipment to minimize worker exertion.
- If the drum shows signs of swelling or bulging, perform all steps slowly. Relieve excess pressure prior to opening and, if possible, from a remote location using such devices as a pneumatic impact wrench or hydraulic penetration device. If pressure must be relieved manually, place a barrier such as explosion-resistant plastic sheeting between the worker and bung to deflect any gas, liquid, or solids which may be expelled as the bung is loosened.

Two drums with rusted bungs [illegible] opened by backhoes with bronze spikes and now a[illegible] sampling. Drum in fore ground h[illegible] labelled "150" for sample documentation

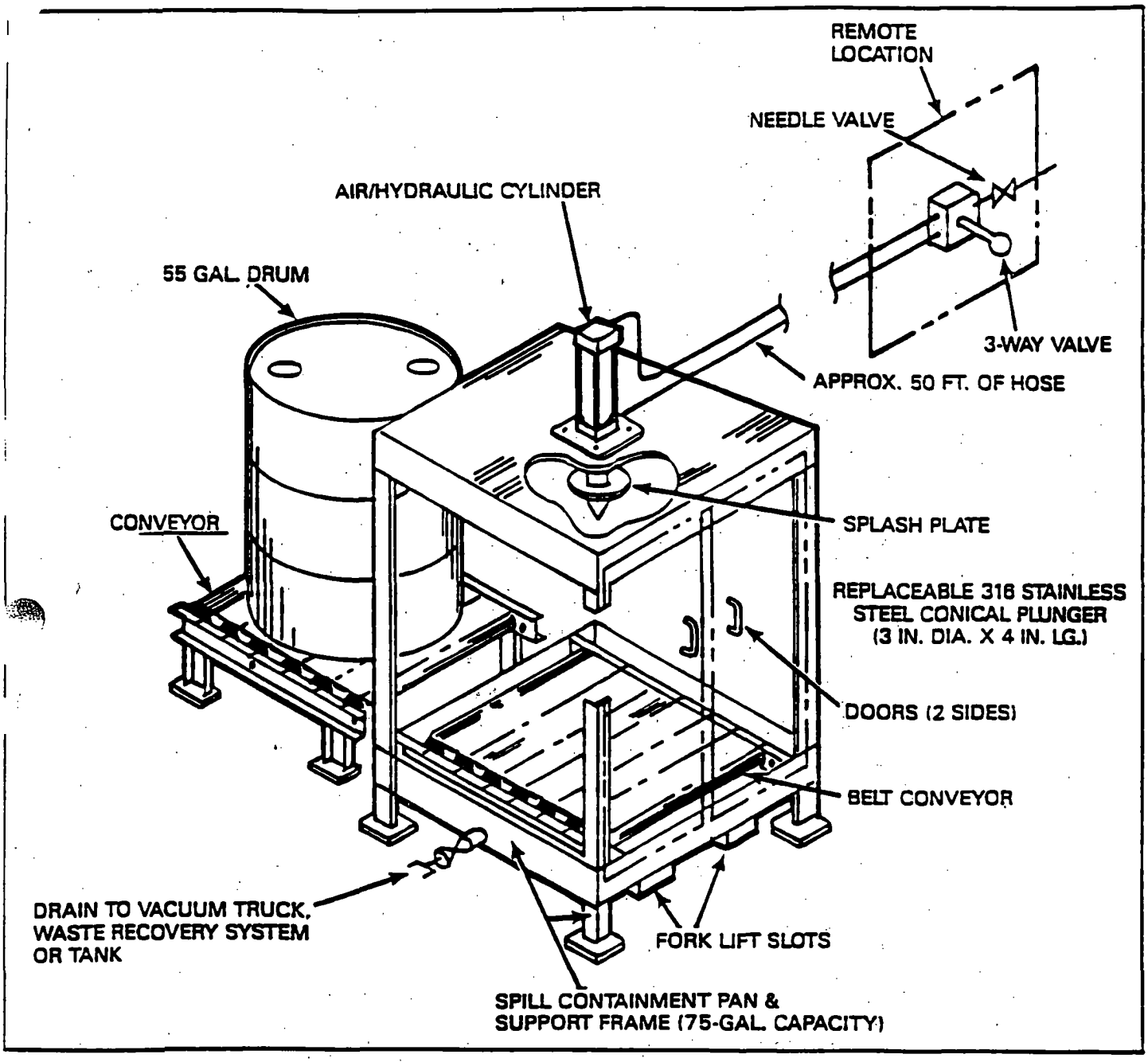

Figure 11-2. Air/Hydraulic-Operated Single-Drum Puncture Device.
Source: Reference (1).

- Open exotic metal drums and polyethylene or polyvinyl chloride-lined (PVC-lined) drums through the bung by removal or drilling. Exercise extreme caution when manipulating these containers.
- Do *not* open or sample individual containers within laboratory packs.
- Reseal open bungs and drill openings as soon as possible with new bungs or plugs to avoid explosions and/or vapor generation. If an open drum cannot be resealed, place the drum into an overpack. Plug any openings in pressurized drums with pressure-venting caps set to a 5-psi (pounds per
- Decontaminate equipment after each use to avoid mixing incompatible wastes.

Sampling

Drum sampling can be one of the most hazardous activities to worker safety and health because it often involves direct contact with unidentified wastes. Prior to collecting any sample, develop a sampling plan:

- Research background information about the waste.
- Determine which drums should be sampled.

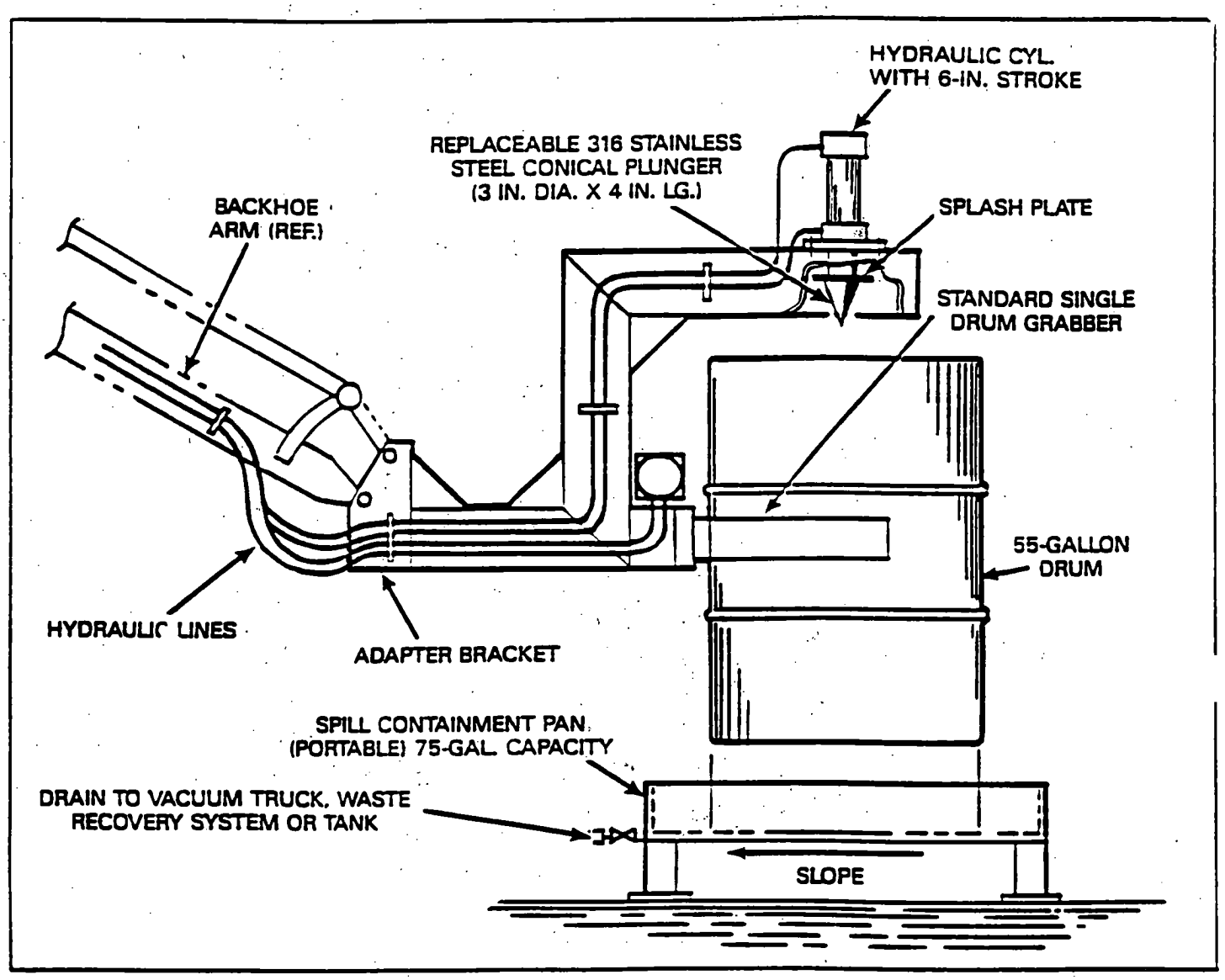

Figure 11-3. Backhoe-Mounted Drum Puncture Device.
Source: Reference [1].

- Develop a sampling plan which includes the number, volume, and locations of samples to be taken.
- Develop Standard Operating Procedures for opening drums, sampling, and sample packaging and transportation. Some guidance in designing proper sampling procedures can be found in References [2] and [3].
- Have a trained health and safety professional determine, based on available information about the wastes and site conditions, the appropriate personal protection to be used during sampling, decontamination, and packaging of the sample.

When manually sampling from a drum, use the following techniques:

- Keep sampling personnel at a safe distance while drums are being opened. Sample only after opening operations are complete.
- Cover drum tops with plastic sheeting or other suitable noncontaminated materials to avoid excessive contact with the drum tops.
- *Never* stand on drums. This is extremely dangerous. Use mobile steps or another platform to achieve the height necessary to safely sample from the drums.
- Obtain samples with either glass rods or vacuum pumps. Do *not* use contaminated items such as discarded rags to sample. The contaminants may contaminate the sample and may not be compatible with the waste in the drum. Glass rods should be remo prior to pumping to minimize damage to pumps.

Characterization

The goal of characterization is to obtain the data necessary to determine how to safely and efficiently package

SITE: _____

DRUM SIZE:
0 unknown ___
1 55 gal. ___
2 30 gal. ___
3 other ___
specify ___

DRUM NO. _____

DRUM OPENING:
0 unknown ___
1 ring top ___
2 closed top ___
3 open top ___
4 other ___
specify ___

SAMPLE NO. ___

DRUM TYPE:
0 unknown ___
1 metal ___
2 plastic ___
3 fiber ___
4 glass ___
5 other ___
specify ___

SCREENING RESULTS (AREA):
0 unknown ___
1 radioactive ___
2 acid/oxidizer ___
3 caustic/reducer/cyanide ___
4 flammable organic ___
5 nonflammable organic ___
6 peroxide ___
7 air or water reactive ___
8 inert ___

DRUM COLOR:	PRI	SEC
0 unknown	___	___
1 cream	___	___
2 clear	___	___
3 black	___	___
4 white	___	___
5 red	___	___
6 green	___	___
7 blue	___	___
8 brown	___	___
9 pink	___	___
10 orange	___	___
11 yellow	___	___
12 gray	___	___
13 purple	___	___
14 amber	___	___
15 green-blue	___	___

DRUM CONTENTS COLOR:		
0 unknown	___	___
1 cream	___	___
2 clear	___	___
3 black	___	___
4 white	___	___
5 red	___	___
6 green	___	___
7 blue	___	___
8 brown	___	___
9 pink	___	___
10 orange	___	___
11 yellow	___	___
12 gray	___	___
13 purple	___	___
14 amber	___	___
15 green-blue	___	___

DRUM CONDITION:
0 unknown ___
1 good ___
2 fair ___
3 poor ___

DRUM MARKING KEYWORD 1
_____

DRUM MARKING KEYWORD 2
_____

DRUM MARKING KEYWORD 3
_____

DRUM CONTENTS STATE:	PRI	SEC
0 unknown	___	___
1 solid	___	___
2 liquid	___	___
3 sludge	___	___
4 gas	___	___
5 trash	___	___
6 dirt	___	___
7 gel	___	___

DRUM CONTENT AMOUNT:
0 unknown ___
1 full ___
2 part ___
3 empty ___

CHEMICAL ANALYSIS:	YES	NO
radiation	___	___
ignitable	___	___
water reactive	___	___
cyanide	___	___
oxidizer	___	___
organic vapor	_____ ppm	
pH	_____	

SCREENING DATA:

	YES	NO	
RADIOACTIVE	___	___	≥ 1 mR over background
ACIDIC	___	___	pH ≤ 3
CAUSTIC	___	___	pH ≥ 12
AIR REACTIVE	___	___	Reaction of ≥ 10°F temp. change
WATER REACTIVE	___	___	Reaction of ≥ 10°F temp. change
WATER SOLUBLE	___	___	Dissolves in water
WATER BATH OVA	___	___	Reading = ____ ≥ 10 ppm = Yes
COMBUSTIBLE	___	___	Catches fire when torched in water bath
HALIDE	___	___	Green flame when heated with copper
INORGANIC	___	___	WATER BATH OVA and COMBUSTIBLE = No
ORGANIC	___	___	INORGANIC = No
ALCOHOL/ALDEHYDE	___	___	WATER BATH OVA, WATER SOLUBLE and COMBUSTIBLE = Yes
CYANIDE	___	___	Draeger tube over water bath ≥ 2 ppm
FLAMMABLE	___	___	COMBUSTIBLE = Yes, and SETA flashpoint ≤ 140°F
OXIDIZER	___	___	Starch iodine paper shows positive reaction
INERT OR OTHER	___	___	Everything "No" except INORGANIC or ORGANIC

Figure 11-4. Sample Drum Characterization Sheet.
Source: EPA Region VII Emergency Planning and Response Branch.
(This figure is provided only as an example. Values were selected by EPA Region VII and should be modified as appropriate.)

ized to determine which of them can be safely combined (see *Bulking* later in this chapter). As a first step in obtaining these data, standard tests should be used to classify the wastes into general categories, including pyro-reactives, water reactives, inorganic acids, organic acids, heavy metals, pesticides, cyanides, inorganic oxidizers, and organic oxidizers. In some cases, further analysis should be conducted to more precisely identify the waste materials. See Figure 11-4 for an example of a characterization sheet for drums.

recycled paper

When possible, materials should be characterized using an onsite laboratory. This provides data as rapidly as possible, and minimizes the time is

precludes any potential problems associated with transporting samples to an offsite laboratory (e.g., sample packaging, waste incompatibility, fume generation).

If samples must be analyzed off site, samples should be packaged on site in accordance with DOT regulations (49 CFR) and shipped to the laboratory for analysis.

Staging

ecology and environment

Although every attempt should be made to minimize drum handling, drums must sometimes be staged (i.e., moved in

drums from potentially hazardous site conditions (e.g., movement of heavy equipment and high temperatures that might cause explosion, ignition, or pressure buildup). Staging involves a trade-off between the increased hazards associated with drum movement and the decreased hazards associated with the enhanced organization and accessibility of the waste materials.

The number of staging areas necessary depends on site-specific circumstances such as the scope of the operation, the accessibility of drums in their original positions, and the perceived hazards. Investigation usually involves little, if any, staging; remedial and emergency operations can involve extensive drum staging. The extent of staging must be determined individually for each site, and should always be kept to a minimum. Up to five separate areas have been used (see Figure 11-5):

- An *initial staging area* where drums can be (1) organized according to type, size, and suspected contents, and (2) stored prior to sampling.
- An *opening area* where drums are opened, sampled, and resealed. Locate this area a safe distance from the original waste disposal or storage site and from all staging areas to prevent a chain reaction in case of fire or explosion.
- During large-scale remedial or emergency tasks, a separate *sampling area* may be set up at some distance from the opening area to reduce the number of people present in the opening area, and to limit potential casualties in case of an explosion.
- A *second staging area*, also known as a holding area, where drums are temporarily stored after sampling pending characterization of their contents. Do *not* place unsealed drums with unknown contents in the second staging area in case they contain incompatible materials. (Either remove the contents or overpack the drum.)
- A *final staging area*, also known as a bulking area, where substances that have been characterized are bulked for transport to treatment or disposal facilities.

  Locate the final staging area as close as possible to the site's exit.

  Grade the area and cover it with plastic sheeting.

  Construct approximately 1-foot-high (0.3-m-high) dikes around the entire area.

  Segregate drums according to their basic chemical categories (acids, heavy metals, pesticides, etc.) as determined by characterization. Construct separate areas for each type of waste present to preclude the possibility of intermingling incompatible chemicals when bulking.

In all staging areas, stage the drums two wide in two rows per area (see Figure 11-6), and space these rows 7 to 8 feet (2 to 2.5 m) apart to enable movement of the drum handling equipment.

Bulking

been characterized are often mixed

Crushed drums awaiting landfill. Note the staging of drums on the left in a row two drums wide.

facilities. This increases the efficiency of transportation. Bulking should be performed only after thorough waste characterization by trained and experienced personnel. The preliminary tests described earlier under *Characterization* provide only a general indication of the nature of the individual wastes. In most cases, additional sampling and analysis to further characterize the wastes, and compatibility tests (in which small quantities of different wastes are mixed together under controlled conditions and observed for signs of incompatibility such as vapor generation and heat of reaction) should be conducted. Bulking is performed at the final staging area using the following procedures:

- Inspect each tank trailer and remove any residual materials from the trailer prior to transferring any bulked materials. This will prevent reactions between incompatible chemicals.
- To move hazardous liquids, use pumps that are properly rated (see National Fire Protection Association (NFPA) 70 Articles 500-503 and NFPA 497M) and that have a safety relief valve with a splash shield. Make sure the pump hoses, casings, fittings, and gaskets are compatible with the material being pumped.
- Inspect hose lines before beginning work to ensure that all lines, fittings, and valves are intact with no weak spots.
- Take special precautions when handling hoses as they often contain residual material that can splash or spill on the personnel operating the hoses. Protect personnel against accidental splashing. Protect lines from vehicular and pedestrian traffic.
- Store flammable liquids in approved containers.

Shipment

Shipment of materials to offsite treatment, storage, or disposal facilities involves the entry of waste hauling vehicles into the site. U.S. Department of Transportation

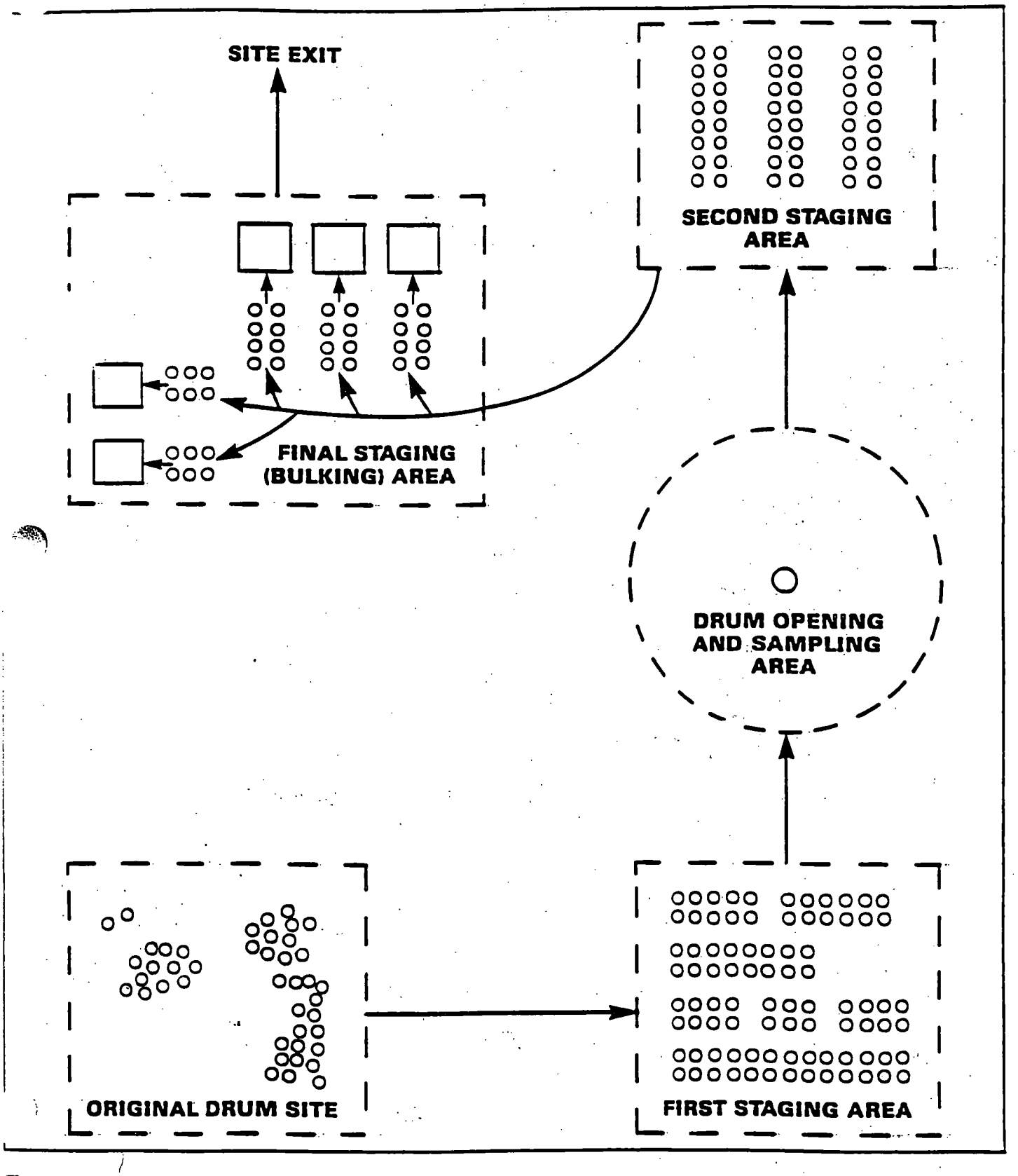

Fig. 11-5. Possible Staging Areas at a Hazardous Waste Site.

Equip the entry team with appropriate respiratory protection, protective clothing, safety harnesses, and ropes.

Equip a safety observer with appropriate respiratory protection, protective clothing, a safety harness, and rope.

Establish lifeline signals prior to entry so that the worker and safety observer can communicate by tugs on the rope.

Have an additional person available in the immediate vicinity to assist the safety observer if needed.

Instruct the safety observer not to enter the space until additional personnel are on scene.

Vacuum Trucks

- Wear appropriate protective clothing and equipment when opening the hatch.
- If possible, use mobile steps or suitable scaffolding consistent with 29 CFR Part 1910, Subpart D. Avoid climbing up the ladder and walking across the tank catwalk.
- If the truck must be climbed, raise and lower equipment and samples in carriers to enable workers to use two hands while climbing.
- If possible, sample from the top of the vehicle. If it is necessary to sample from the drain spigot, take steps to prevent spraying of excessive substances. Have all personnel stand off to the side. Have sorbent materials on hand in the event of a spill.

Elevated Tanks

In general, observe the safety precautions described for vacuum trucks. In addition:

- Use a safety line and harness.
- Maintain ladders and railings in accordance with OSHA requirements (29 CFR Part 1910, Subpart D).

Compressed Gas Cylinders

- Obtain expert assistance in moving and disposing of compressed gas cylinders.
- Handle compressed gas cylinders with extreme caution. The rupture of a cylinder may result in an explosion, and the cylinder may become a dangerous projectile.
- Record the identification numbers on the cylinders to aid in characterizing their contents.

Ponds and Lagoons

- Drowning is a very real danger for personnel suited in protective equipment because the weight of protective equipment increases an individual's overall density and severely impairs their swimming ability. Where there is danger of drowning, provide necessary safety gear such as lifeboats, tag lines, railings, nets, safety harnesses, and flotation gear.
- Wherever possible, stay on shore. Avoid going out over the water.
- Be aware that some solid wastes may float and give the appearance of solid cracked mud. Caution should be exercised when working along shorelines.

References

1. Mayhew, Joe J.; G.M. Sodear; and D.W. Carroll. 1982. A Hazardous Waste Site Management Plan. Chemical Manufacturers Association, Inc., Washington DC.

2. deVera, E.R.; B.P. Simmons; R.D. Stephens; and D.L. Storm. 1980. Samplers and Sampling Procedures for Hazardous Waste Streams. EPA-600/2-80-018. U.S. Environmental Protection Agency, Cincinnati, OH.

3. U.S. EPA. 1984. Characterization of Hazardous Waste Sites—A Methods Manual: Volume II. Available Sampling Methods. Second edition. EPA 600/4-84-076.

4. NIOSH. 1979. Criteria for a Recommended Standard: Working in Confined Spaces. NIOSH No. 80-106. Also available from U.S. Government Printing Office (#017-033-00353-0) and National Technical Information Service (PB-80-183015).

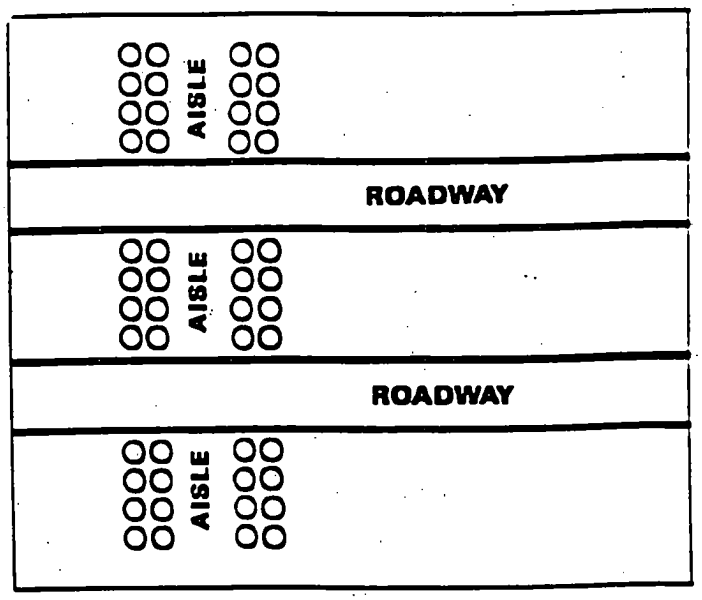

Figure 11-6. Sample Drum Staging Layout.
Source: Reference [1].

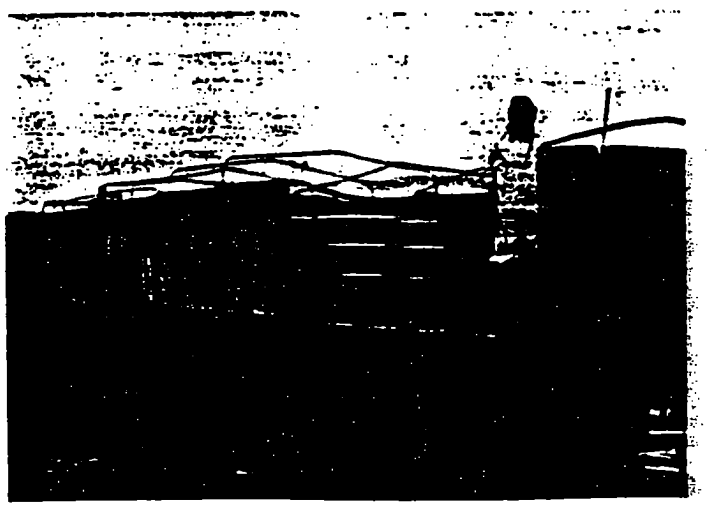

Single-stacked overpack drums awaiting transport off site. Worker suited in Level C personal protective equipment will spread a tarp over the drums to protect them during transport.

wastes must be complied with. The following guidelines can enhance the safety of these operations:

- Locate the final staging (bulking) area as close as possible to the site exit.
- Prepare a circulation plan that minimizes conflict between cleanup teams and waste haulers. Install traffic signs, lights, and other control devices as necessary.
- Provide adequate area for onsite and hauling vehicles to turn around. Where necessary, build or improve onsite roads.
- Stage hauling vehicles in a safe area until ready for [illegible] in cab. Minimize the
- Outfit the driver with appropriate protective equipment.
- If drums are shipped, tightly seal the drums prior to loading. Overpack leaking or deteriorated drums prior to shipment. (Under most circumstances, overpack drums used for hazardous wastes may not be reused [49 CFR Part 173.3(c)]). Make sure that truck bed and walls are clean and smooth to prevent damage to drums. Do *not* double stack drums. Secure drums to prevent shifting during transport.
- Keep bulk solids several inches below the top of the truck container. Cover loads with a layer of clean soil, foam, and/or tarp. Secure the load to prevent shifting or release during transport.
- Weigh vehicles periodically to ensure that vehicle and road weight limits are not exceeded.
- Decontaminate vehicle tires prior to leaving the site to ensure that contamination is not carried onto public roads.
- Check periodically to ensure that vehicles are not releasing dust or vapor emissions off site.
- Develop procedures for responding quickly to offsite vehicle breakdown and accidents to ensure minimal public impact.

Special Case Problems

Tanks and Vaults

For tanks and vaults, which are often found on hazardous waste sites, the following procedures are recommended:

- In general, when opening a tank or vault follow the same procedures as for a sealed drum. If necessary, vent excess pressure if volatile substances are stored. Place deflecting shields between workers and the opening to prevent direct contamination of workers by materials forced out by pressure when the tank is opened.
- Guard manholes or access portals to prevent personnel from falling into the tank.
- Identify the contents through sampling and analysis. If characterization indicates that the contents can be safely moved with the available equipment, vacuum them into a trailer for transportation to a disposal or recycling facility.
- Empty and decontaminate the tank or vault before disposal.
- If it is necessary to enter a tank or vault (i.e., confined spaces) for any reason (e.g., to clean off solid materials or sludges on the bottom or sides of the tank or vault), the following precautions should be taken [4]:

  Ventilate thoroughly prior to entry.

  Disconnect connecting pipelines.

  Prior to entry, take air samples to prove the absence of flammable or other hazardous vapors and to demonstrate that adequate levels of oxygen

recycled paper
ecology and environment

ATTACHMENT J
DRUM SAMPLING

	ecology and environment, inc.	
	Title: SOP-DRUM SAMPLING	
	Category: GEOTECHNICAL 5.23	Revised: JANUARY 1990
		Approved: H. Van Cleave

STANDARD OPERATING PROCEDURE
FOR
DRUM SAMPLING

REVISED: JANUARY 1990

Prepared by

Ecology and Environment, Inc.
368 Pleasantview Drive
Lancaster, New York 14086

CONTENTS

Section		Page
1	INTRODUCTION	1
2	METHOD SUMMARY	1
3	SAMPLE PRESERVATION, CONTAINERS, HANDLING, AND STORAGE	1
4	POTENTIAL PROBLEMS	1
5	EQUIPMENT	2
6	REAGENTS	3
7	PROCEDURES	3
	7.1 DRUM STAGING	3
	7.2 DRUM OPENING	4
	7.2.1 Manual Drum Opening	5
	7.2.1.1 Bung Wrench	5
	7.2.1.2 Drum Deheading	5
	7.2.1.3 Hand Pick or Spike	6
	7.2.2 Remote Drum Opening	6
	7.2.2.1 Backhoe Spike	6
	7.2.2.2 Hydraulic Devices	6
	7.2.2.3 Pneumatic Devices	7
	7.3 DRUM SAMPLING	7
	7.3.1 Glass Thief Sampler	7
	7.3.2 COLIWASA Sampler	8
8	CALCULATIONS	9
9	QUALITY ASSURANCE	9
10	DATA VALIDATION	10
11	HEALTH AND SAFETY	10
12	REFERENCES	11
APPENDICES		
A	DRUM DATA SHEET	A-1

recycled paper
ecology and environment
00080.PM3

1 INTRODUCTION

The purpose of this document is to provide recommended procedures for implementing safe and cost-effective response actions applicable to hazardous waste sites containing drums. Container contents are sampled and characterized for disposal, bulking, recycling, grouping, and classification purposes.

2 METHOD SUMMARY

Prior to sampling, drums must be inventoried, staged, and opened. Inventory entails recording visual qualities of each drum and any characteristics pertinent to the contents' classification. Staging involves the organization, and sometimes consolidation, of drums that have similar wastes or characteristics. Opening of closed drums can be performed manually or remotely. Remote drum opening is recommended for worker safety. The most widely used method of sampling a drum involves the use of a glass thief. This method is quick, simple, relatively inexpensive, and requires no decontamination.

3 SAMPLE PRESERVATION, CONTAINERS, HANDLING, AND STORAGE

- No preservatives shall be added to the sample.
- Complete drum data sheet (Appendix A).
- Place sample container in two ziploc plastic bags.
- Place each bagged container in a 1-gallon covered can containing absorbent packing material. Place lid on can.
- Mark the sample identification number on the outside of the can.
- Place the marked cans in a cooler and fill remaining space with absorbent packing material.
- Fill out chain-of-custody record for each cooler, place in plastic, and affix to inside lid of cooler.
- Secure and custody seal the lid of the cooler.
- Arrange for the appropriate transportation mode consistent with the type of hazardous waste involved.

4 POTENTIAL PROBLEMS

The practice of tapping drums to determine their contents is neither safe nor effective and should not be used if the drums are visually overpressurized or if shock-sensitive materials are suspected.

Drums that have been overpressurized to the extent that the head is swollen several inches above the level of the chime should not be moved. A number of devices have been developed for venting critically swollen drums. One method that has proven to be effective is a tube and spear device. A light aluminum tube (3 meters long) is positioned at the

recycled paper
ecology and environment
00080.PM3

Hand Pick, Pickaxe, and Hand Spike

These tools (Appendix B3) are usually constructed of brass or a nonsparking alloy with a sharpened point that can penetrate the drum lid or head when the tool is swung. The hand picks or pickaxes that are most commonly used are commercially available, whereas the spikes are generally uniquely fabricated 4-foot-long poles with a pointed end.

Backhoe Spike

The most common means used to open drums remotely for sampling is the use of a metal spike attached or welded to a backhoe bucket. (Appendix B4). In addition to being very efficient, this method can greatly reduce the likelihood of personnel exposure.

Hydraulic Drum Opener

Recently, remotely operated hydraulic devices (Appendix B5) have been fabricated to open drums remotely. One such device is discussed here. This device uses hydraulic pressure to pierce through the wall of a drum. It consists of a manually operated pump which pressurizes oil through a length of hydraulic line.

Pneumatic Devices

A pneumatic bung remover (Appendix B6) consists of a compressed air supply that is controlled by a heavy-duty, two-stage regulator. A high-pressure air line of desired length delivers compressed air to a pneumatic drill, which is adapted to turn a bung fitting selected to fit the bung to be removed. An adjustable bracketing system has been designed to position and align the pneumatic drill over the bung. This bracketing system must be attached to the drum before the drill can be operated. Once the bung has been loosened, the bracketing system must be removed before the drum can be sampled. This remote bung opener does not permit the slow venting of the container, and therefore appropriate precautions must be taken. It also requires the container to be upright and relatively level. Bungs that are rusted shut cannot be removed with this device.

6 REAGENTS

Decontamination of sampling equipment should follow procedures outlined in the site-specific work plan.

7 PROCEDURES

7.1 DRUM STAGING

Prior to sampling, the drums should be staged to allow easy access. Ideally, the staging area should be located just far enough from the

recycled paper: recycled paper
energy and environment
00080.PM3

- o Drum deheading.
- o Remote drum puncturing or bung removal.

The choice of drum opening techniques and accessories depends on the number of drums to be opened, their waste contents, and physical condition. Remote drum opening equipment should always be considered in order to protect worker safety. Under OSHA 1910.120, manual drum opening with bung wrenches or deheaders should be performed ONLY with structurally sound drums and waste contents that are known to be shock-insensitive, nonreactive, nonexplosive, and nonflammable.

7.2.1 Manual Drum Opening

7.2.1.1 Bung Wrench

Manual drum opening with bung wrenches should not be performed unless the drums are structurally sound (no evidence of bulging or deformation) and their contents are known, and nonexplosive. If opening the drum with bung wrenches is deemed reasonably cost-effective and safe, then certain procedures should be implemented to minimize the hazard:

- o Field personnel should be fully outfitted with protective gear.
- o Drums should be positioned upright with the bung up, or, for drums with bungs on the side, laid on their sides with the bung plugs up.
- o The wrenching motion should be a slow, steady pull across the drum. If the length of the bung wrench handle provides inadequate leverage for unscrewing the plug, a "cheater bar" can be attached to the handle to improve leverage.

7.2.1.2 Drum Deheading

Drums are opened with a drum deheader by first positioning the cutting edge just inside the top chime and then tightening the adjustment screw so that the deheader is held against the side of the drum. Moving the handle of the deheader up and down while sliding the deheader along the chime will enable the entire top to be rapidly cut off if so desired. If the top chime of a drum has been damaged or badly dented it may not be possible to cut the entire top off. Because there is always the possibility that a drum may be under pressure, the initial cut should be made very slowly to allow for the gradual release of any built-up pressure. A safer technique would be to employ a remote method prior to using the deheader.

Self-propelled drum openers which are either electrically or pneumatically driven are available, and can be used for quicker and more efficient deheading.

recycled paper
ecology and environment
00090.PM3

serve as a permanent tap or sampling port. The piercer is designed to establish a tight seal after penetrating the container.

7.2.2.3 Pneumatic Devices

Pneumatically operated devices utilizing compressed air have been designed to remove drum bungs remotely (Appendix B6).

7.3 DRUM SAMPLING

After the drum has been opened, preliminary monitoring of headspace gases should be performed using an explosimeter and organic vapor analyzer.

In most cases it is impossible to observe the contents of sealed or partially sealed vessels. Since some layering of stratification is likely in any solution left undisturbed over time, a sample must be taken that represents the entire depth of the vessel.

When sampling a previously sealed vessel, a check should be made for the presence of a bottom sludge. This is easily accomplished by measuring the depth to the apparent bottom, then comparing it to the known interior depth.

7.3.1 Glass Thief Sampler

The most widely used implement for sampling is a glass tube (glass thief, 6- to 16-mm ID X 48-inch length). This tool is simple, cost-effective, quick, and collects a sample without having to decontaminate.

A standard sampling procedure using a glass thief is as follows:

1. Remove cover from sample container.
2. Insert glass tubing almost to the bottom of the drum or until a solid layer is encountered. About 1 foot of tubing should extend above the drum.
3. Allow the waste in the drum to reach its natural level in the tube.
4. Cap the top of the sampling tube with a tapered stopper or thumb, ensuring liquid does not come into contact with stopper.
5. Carefully remove the capped tube from the drum and insert the uncapped end in the sample container. Do not spill liquid on the outside of the sample container.
6. Release stopper and allow the glass thief to drain completely into the sample container. Fill the container to about 2/3 of capacity.
7. Remove tube from the sample container, break it into pieces and place the pieces in the drum.

(recycled paper
ecology and environment
00080.PM3

outside the sampler, the sampling rate is too fast and will result in a nonrepresentative sample.)

3. When the sampler stopper hits the bottom of the waste container, push the sampler tube downward against the stopper to close the sampler. Lock the sampler in the closed position by turning the T-handle until it is upright and one end rests tightly on the locking block.
4. Slowly withdraw the sample from the waste container with one hand while wiping the sampler tube with a disposable cloth or rag with the other hand.
5. Carefully discharge the sample into a suitable sample container by slowly pulling the lower end of the T-handle away from the locking block while the lower end of the sampler is positioned in a sample container.
6. Cap the sample container with a Teflon-lined cap; attach label and seal; and record on sample data sheet.
7. Unscrew the T-handle of the sampler and disengage the locking block. Clean the sampler.

8 CALCULATIONS

There are no specific calculations for these procedures.

9 QUALITY ASSURANCE

The following general quality assurance (QA) procedures apply:

1. All data must be documented on standard chain-of-custody forms, field data sheets, or within field or site logbooks.

2. All instrumentation must be operated in accordance with operating instructions as supplied by the manufacturer, unless otherwise specified in the work plan. Equipment checkout and calibration activities must occur prior to sampling or operation, and they must be documented.

3. All deliverables will receive peer review prior to release.

The following specific QA activity will apply:

Generally, 1 duplicate sample is collected for every 10 samples collected. Other duplicates and spikes may be required depending on the particular analytical parameter requested. See the site-specific sampling plan for further QA considerations.

recycled paper
ecology and environment
00080.PM3

2.1.11 Hazards and SOPs Associated with Drum Sampling:

Hazards

1. Direct skin contact, ingestion and inhalation of contaminants.
2. Potential for chemical splash and mixing of incompatible materials, air or water reactions.
3. Poor physical condition of drums.
4. Slip/Trip/Fall hazards associated with slick surfaces or high or elevated work areas.

SOPs

1. Use of chemical resistant coveralls such as Saranex or butyl rubber during sampling.
2. Use of Level B respiratory protection for opening tanks or unknown drums, for sampling unknown materials, for sampling solvent tanks, or when ambient organic concentrations exceed 5 ppm.
3. Use of Level C respiratory protection for re-sampling known materials and ambient organic concentrations are less than 5 ppm.
4. Keep fire extinguishers immediately available.
5. Keep absorbent materials immediately available.
6. Use a new drum thief to sample each drum or container.
7. Frequent air monitoring will be performed to ensure the quality of the ambient air.
8. If a drum is bulging or difficult to open, use remote opening techniques.

ATTACHMENT K
OPENING DRUMS AND OVERPACKS

CONTAINER OPENING PROCEDURES

recycled paper

ecology and environment

A.1 INTRODUCTION

This appendix provides procedures for moving and/or opening closed containers on hazardous waste sites. A container is defined here as any drum, bottle, can, bag, etc., with a capacity of 120 gallons or less. Bulk tanks such as railroad tank cars, large above- and below-ground tanks (>120 gallons), and tank trailers are not included.

In general, a drum opening and sampling project will have one of three possible objectives:

- To determine (usually for enforcement case support purposes) the presence of hazardous materials on a site. Such a program involves a limited number of containers, possibly only one.

- To characterize the range of materials present at a site. In this case, containers would be chosen for sampling by means of systematic selection criteria (see Section A.3.1).

- To characterize container contents for bulking for subsequent disposal or treatment. Such a project may involve opening and sampling every container on a site in support of a remedial action project.

The procedures presented in this appendix are based on field experience in working with containers on uncontrolled hazardous waste sites. It will be evident that in many cases hands-on experience is lacking. As a result, explicit directions cannot be given and professional judgment is required. In general, one should not place complete confidence in any assessment of the potential contents of a container. Labels cannot be absolutely trusted. Only educated guesses can be made based on a thorough review of all available background data such as potential sources of the wastes. Accordingly, this appendix provides a conservative and cautious approach to the opening and sampling of containers.

Three major risks are involved in moving and shipping closed containers: 1) exposure of personnel to toxic materials; 2) explosion; and 3) fire. The first risk can be reasonably controlled through the use of proper skin and respiratory protection equipment. The use of

butyl rubber aprons and hoods and other chemically resistant clothing, in conjunction with a self-contained breathing apparatus (SCBA), appreciably reduces the risk of a worker being injured by toxic vapors, mists, or splashes. Similarly, standard fire prevention procedures, including the use of detection instruments and proper response equipment, can reduce the risk of fire. These procedures include the use of non-sparking tools and intrinsically safe radios, pumps, and other equipment, as well as the staging of fire-fighting equipment at the site and the elimination of possible ignition sources.

The risk of explosion, however, is not as easily handled and thus is the primary consideration in any container opening operation. Even if based on preliminary data one determines that there is no positive evidence of the presence of explosives, one should never assume that explosives are not present at the site. In order to provide the same reasonable level of protection against this risk as against toxic exposure and fire, a very cautious approach should be adopted.

A.2 BACKGROUND REVIEW

The first step in preparing a site operations plan for drum opening is a site background review. The decision of whether or not to conduct the operation depends on the assessment of the site history. Therefore, the items discussed below must be thoroughly and carefully completed.

A.2.1 Preliminary Assessment

A preliminary assessment is the first step in planning a container opening operation.* Of special importance are items that can be used to characterize the types of hazardous materials present at the site, e.g., generator records, manifests, financial records, inventories, personal interviews, monitoring data, etc. This information should be reviewed to determine the possible presence on the site

*U.S. Environmental Protection Agency, 1981, "Preliminary Assessment," Monograph 4 in Technical Methods for Investigating Sites Containing Hazardous Substances, Draft.

of shock-sensitive explosives and/or reactive chemicals. Insufficient or completely lacking waste inventory information could prevent drum opening.

A.2.2 Explosive Product Survey

If the site is a waste disposal or storage operation, a survey of commercial producers or users of explosives within the area served by the facility must be conducted. How large an area is to be covered in this survey should be based on the locations of known waste generators that used the facility and the location of the site. Agencies that could assist in identifying producers or users of explosives are local and state police units, state transportation departments, the U.S. Department of Transportation (DOT), the U.S. Environmental Protection Agency (EPA), and state hazardous waste permitting offices. Standard Industrial Classification (SIC) codes can be used to locate explosive producers from lists of manufacturers available from state commerce agencies, local chambers of commerce, planning agencies, etc.

A.2.3 Site Inspection

A site visit is required during the planning of the container opening operation. The following information should be gathered during the inspection:

- Site boundaries. Fences, roads, natural boundaries, etc.
- Access points and travel routes on the site.
- Topographic features.
- Adjacent land uses. Residential, agricultural, public use areas, commercial establishments, schools, undeveloped areas, etc.
- Power lines, pipelines, railroads, and public roads in proximity to the site.

- Container storage. Document observations. Describe arrangement of containers (jumbled, stacked, piled, arranged in rows, etc.) and general condition of containers. Indicate if containers can be grouped according to visual features, contents, or any other classification method.

- Facilities. Locate and identify buildings and other site facilities including disposal areas such as lagoons, landfills, surface piles, etc.

- Location of water sources.

- Location of potential staging and work areas.

In general, a preliminary assessment and site inspection should include sampling available sources of highly concentrated wastes, such as open drums, leachate, soil, stains, etc. Field characterization equipment should be used to determine ambient conditions and potential "hot spots" of organic and inorganic vapors. This information is plotted on a site sketch, which will be required for the site operations plan. Maps and aerial photos can also be used to develop the site sketch.

During the site inspection, local officials should be contacted to arrange for fire protection and police support during the operation. Interviews should also be conducted with site workers, local officials, and any other people familiar with the site's history.

The primary purpose of the background review is to evaluate the risk to personnel involved in container opening operations. An assessment of container contents is most important because it identifies specific risks. However, other on-site conditions also affect the hazard potential. Leaking and corroded containers, crowded and poorly organized conditions, and containers of unknown and apparently diverse origins are conditions that require careful planning.

There are no accurate quantitative methods available to evaluate the total risk. The risk assessment is subjective and should be done by personnel experienced in hazardous site field operations. Good professional judgment is required, and project management must insure

that adequate information is made available to support a decision to conduct the container opening operations. Any positive indication of shock-sensitive materials that might react or explode requires special consideration.

A.3 GUIDELINES FOR CONTAINER OPENING OPERATIONS

A.3.1 Container Selection

The containers selected for opening and sampling will depend on the purpose of the operation and on safety considerations (e.g., avoid a container which may detonate). While it is worthwhile to consider container markings and types, as well as groupings, labels and other markings are never to be completely trusted.

When sampling for enforcement, the first choice of containers would be those marked with known hazardous materials (trade name, chemical name, empirical formula) or hazardous labeling. Next, sample those containers which are isolated or packaged in a metal that is not steel. Finally, piles or stacks of unmarked containers should be randomly sampled among the various distinguishable container lots.

When sampling to characterize a site, a concerted effort should be made to distinguish container lots and to get a good container count among the lots. Select a container which appears to be characteristic, one located in the middle of all the major container lots, and then sample as many of the smaller lots as practical. Never climb on containers; if necessary, a container should be moved from the center of a group by means of special grappling equipment. If possible, collect samples from major container lots randomly and at either end of a lot to see if the wastes are similar throughout the lot.

In general, hazardous waste sites are not well organized; however, there are instances when there is some organization or pattern to the way the containers were placed on site. For example, one might find the flammable liquids and solvents in one area, acids in another, cyanide in another, recoverable metals in a fourth, etc. Some disposal facilities stencil control numbers on containers to indicate specific lots. Often if the site was poorly operated, the only indications that a group of containers is related are similar location, color, size, or type.

Typically, waste is shipped to sites in 55-gallon drums on trucks. A normal load consists of 50 to 80 drums, depending on their weight. During the initial site inspection, look for distinguishing features in an attempt to define the different drum lots on the site. The trade name, chemical name, or empirical formula may be written on the drum. Another distinguishing feature would be drums of exotic metal such as aluminum, nickel, monel, stainless, steel etc. Occasionally, chemical manufacturing facilities may use drums that have a strange shape or size, or a drum with an unusual configuration or adaptation for a particular process line. Examples are drums with the bung in the center at the top and drums with double-sided fill/vent bungs.

Experience shows that on almost every site that has been receiving waste there is an isolated group of containers. Approach these with care and attempt to determine why they were segregated. One occasionally finds such containers marked "DFW" ("Don't f___ with") because of their extreme hazard or because the people handling them have had an accident or other unusual experience with them.

In any lot of containers one will occasionally find an unusual or out-of-place container. This container will not fit the pattern, color, size, etc., of those around it. It may be a distended drum among undistended drums or a lined drum among unlined drums. These "oddball" containers should be approached with caution.

An attempt should be made to avoid containers which are structurally damaged or where their movement or sampling would endanger the team member or cause a spill. For example, do not sample drums in stacks or piles; move such drums first.

On a site that has many different types of containers, the order of sampling should be based on their expected contents, with the least hazardous sampled first. This is the recommended order:

(1) Paper, plastic, cloth, and burlap bags.

(2) Glass carboys and jugs (except chemical reagent or laboratory pack bottles).

(3) Fiberboard drums.

(4) Plastic and polyethylene carboys and containers.

(5) Plastic-lined steel drums.

(6) Steel drums.

(7) Exotic metal drums.

(8) Odd containers (distended, isolated, marked "DFW," etc.).

Table A-1 presents information on the types, sizes, DOT markings, openings, and recommended techniques for opening the various kinds of containers. Note that any drum without a DOT mark will not be sampled. Such a drum may have military origins. This drum should be isolated and brought to the attention of the site team leader. The DOT mark, which is usually found on the bottom of a drum, can be useful in determining the composition of the drum.

A.3.2 Staging and Sampling Areas

When possible, containers should be opened and sampled in place to minimize handling. However, when containers are stacked or are close together, consideration must be given to moving them to prevent sympathetic detonation of, or chemical reaction with, the contents of adjacent containers. The main criterion is distance to other containers. A reasonable distance should be maintained or a blast shield used to segregate the container being opened from other containers.

When containers are moved, they should be taken to a staging and sampling area which is diked, bermed, and lined to control spillage. Sorbent pads, sand, and neutralization materials such as lime and soda ash should be on hand to confine any spillage. Again, this area should be far enough away from other containers on site to prevent a chain reaction. Only one container at a time should be placed in the staging area and opened. One crew can be moving and setting up the remote opening equipment on the next container while another crew is sampling, labeling, and resealing the first container.

Containers that are inside warehouses, basements, or other buildings must be moved outside before they can be opened. Adequate

Table A-1

TYPES OF CONTAINERS AND RECOMMENDED OPENING TECHNIQUES

Type of Container	Size	DOT Mark	Type of Opening	Recommended Opening Technique
Steel drum open head, unlined and lined	5 to 110 gal	DOT 5-, DOT 6-, DOT 17-, DOT 37-, DOT 42-,	Detachable steel lid with a clamp or lever locking ring, or a ring with forged lugs and secured by a bolt	Remove bolt and remove ring with lanyard; if possible relieve pressure with clamp or lever locking ring remotely, i.e., lanyard; remove ring with lanyard; remove lid by hand
Steel drum closed head, lined drum	5 to 110 gal	DOT 5 DOT 6 DOT 17 DOT 37 DOT 42	Plastic bung opening not larger than 2.3 inches	Preferred method is to remotely open bung; manual opening otherwise
Steel drum closed head, unlined drum (steel, monel, stainless, nickel, and aluminum)	5 to 110 gal	DOT 5 DOT 6 DOT 17 DOT 37 DOT 42	Steel or other metal drum bung not over 2.3 inches	Remote method
Burlap bag, double kraft paper bag, cloth bag, plastic bag	Various	DOT 36-, DOT 44-, DOT 45-,	Various	Open with sharp implement; reseal bag or overpack in fiberpack
Glass Carboys/jugs	6 to 20 gal	Usually DOT 1- branded into the wooden outer sheathing; often sheathing is no longer present	Lapped or ground glass stopper; occasionally a plastic screw cap will be encountered	Manual

recycled paper
ecology and environment

Table A-1 (Cont.)

Type of Container	Size	DOT Mark	Type of Opening	Recommended Opening Technique
Laboratory reagent bottles (amber bottles), small reagent cans	Various	None	Screw top or press lid	Usually encountered in lab packs. NOT TO BE HANDLED OR SAMPLED. Replace drum lid carefully. Contact NPMO for action.
Polyethylene and other plastic drums or barrels	5 to 110 gal	DOT 2-,	Usually bung is not over 2.7 inches in diameter	Manual
Gas cylinders	Various	DOT 3-, or DOT 4-, DOT 8-, DOT 39-	Valve, threaded fitting, quick-connect or puncture-type fittings	NOT TO BE HANDLED OR SAMPLED. Contact NPMO for action.
Fiberpack or corrugated	5 to 110 gal	DOT 12-, DOT 21-, DOT 23-	Usually a detachable plastic lid with a clamp or lever locking ring	Manually remove locking ring and lid.

recycled paper

personal protection and ventilation are critical requirements for container opening operations. Special provisions may be necessary for operations inside a building.

A.3.3 Manual Opening

This method involves the use of a non-sparking brass bung opening wrench to loosen the large or small bung plug on a drum. Drum bungs come in various shapes and sizes so an assortment of openers must be available to fit the bung. These sockets must be non-sparking.

The smaller bung should be opened if possible in order to reduce the amount of spray released if liquid in the drum sprays due to high vapor pressures. The smaller hole is also easier to seal if the bung plug cannot be reinstalled.

A small disposable splash tarp should be placed over the drum while the bung plug is being unscrewed. The tarp should be heavy and have a small hole in the middle for the bung wrench arm to fit through. The tarp should be at least 6 feet by 6 feet in order to cover the top of the drum. This type of tarp can be reused or disposed if it becomes contaminated.

If possible, an extension should be used on a wrench arm so that the person removing the bung plug can stand at a distance from the drum as it is being opened. Any sound of vapor escaping from the bung opening should be considered a warning and the person opening the drum should move away from the drum quickly. After the pressure is released, the team member can continue opening the drum.

This method of opening drums can only be used if the drum is in good condition. Bulging or concave drums cannot be opened using this method. If the bung is rusted shut or corroded, this method cannot be used.

A second criteria for opening drums manually is that they be labeled properly or there is a reasonably good idea of what is in the drum. A drum containing any materials having a low flash point, high vapor pressure, highly reactive properties, high toxic rating, or is explosive cannot be opened using the manual method.

This method cannot be used in confined spaces or in a tight area where emergency escape would be difficult. If at all possible, the

drums should be opened early in the morning when the ambient air temperature is low and solar radiation is not intense.

The manual method should only be used when only a few drums are to be sampled. If a remote opening device is available, the manual opening method should not be used.

The advantages of this method are that it require very little equipment and is relatively quick and simple. Disadvantages include the fact that it is the most dangerous method next to actually spearing the drum with a hand-held spear; it can waste a lot of time on one drum if the bung is hard to break loose; and it requires investigation and research into the drum's contents and chemical properties.

A.3.4 Remote Opening

Because of the possibility of encountering a drum containing a shock-sensitive material, any drum to be moved and/or sampled should be remotely shaken. One way of doing this is to carefully tie a rope around the drum and shake it from behind a barrier at least 100 feet away.

The preferred method of opening a container is by remote means, except as noted below (see Table A-1). Any drum that is bulging, rusted, or in otherwise poor condition must be opened using a remote opening technique. Four types of remote opening methods are available: the bung spinner, drill, drum piercer, and backhoe piercing methods.

The bung spinner consists of:

- Air impact wrench with non-sparking adapter;
- Drum mounting bracket;
- Two-stage air regulator; and
- Compressed air cylinder with 100 feet of air hose and air control valve.

The impact wrench is mounted over the bung on top of the drum by means of the steel mounting bracket. The air tank, air regulator, and air control valve can be placed up to 100 feet away from the drum in a well-protected location. When activated, the impact wrench applies a torque to the bung and will turn the bung out. The frame holds the wrench directly above the bung.

A remote-controlled, air-operated, self-feeding, and self-retracting drill can also be used. This tools consists of:

- Self-feeding and self-retracting drill,
- Drum mounting bracket,
- 100 feet of air and control hoses,
- Two-stage high-pressure regulator,
- Compressed air cylinder, and
- Filter/regulator/lubricator unit.

As with the bung spinner, the air tank, regulator, and control valves can be placed up to 100 feet away from the drum in a well-protected location. There are two controls on this piece of equipment: a start valve and an emergency retract valve. When the unit is activated, the drill traverses a set distance and retracts. Different bits and drill speeds can be used.

The drum piercer consists of:

- Hydraulic ram with hand pump,
- 100 feet of hydraulic hose,
- Drum-mounting bracket (top or side), and
- Piercing nail.

This unit uses the same mounting bracket as the drum drill. The hydraulic ram slowly forces the steel piercer through the drum surface as the hand pump is operated. When the half-inch diameter hole is complete, opening a relief valve on the pump allows the spring to remove the piercer from the hole.

When any of these pieces of equipment is used, the control lines are to be extended to their maximum, and personnel are to operate the controls from behind sandbags, a concrete or brick structure, or other

solid barriers. Remember, the opening surfaces (drill, bung spinner) must be decontaminated after each use.

The backhoe piercing method method involves the use of a contracted backhoe (extend-a-hole) and operator to pierce the top of the drum using a point attached to the bucket. The backhoe should extend to a distance of at least 20 feet away from the operator.

Most equipment rental companies will weld a 6- to 8-inch brass point on the bottom of the bucket for no charge. This spear can then be pushed or pressed down into the top of the drum, creating a hole for sampling using glass sampling rods. The hole can then be repaired using plugs or moly bolts that are commercially available for this purpose.

The backhoe must be equipped with a bulletproof-type glass cab that totally encloses the operator in case of an explosion or spray. The backhoe operator must wear an airline respirator with a full-face piece while he is punching the drums and be dressed in Level C protective clothing as a minimum.

A combustible gas indicator with an alarm-type device must be set up near the backhoe so the operator can shut the unit down if concentrations exceeding 25% of the lower explosive limit (LEL) are detected in the immediate area.

Advantages of this method are that it is an extremely fast way of creating a sampling hole in the top of the drum (this method should be used on sites containing large quantities of drums to be sampled), and only one person has to be in the area where the drums are being opened (this person is behind a bulletproof type glass shield). The operator is also at least 20 feet away from the drum as it is being pierced. Disadvantages are cost and availability. Also, a hole is created in the drum that must be plugged. The operator must be trained to use and wear a respirator, and must be fit-tested for the respirator.

The following guidelines are offered for other types of containers:

- <u>Ring-closed, open-top drums</u>. The ring should be loosened and then removed remotely by means of a rope. If it is necessary

to cut the ring, do so near the bolt or clamp/lever so that there will be a place to attach the rope.

- Glass carboys or jugs with lapped/ground glass stopper or plastic cap. Slowly release any retaining wire and vent any pressure. Remove the stopper or cap by hand only using heavy, matted cloth gloves over a pair of chemical-resistant inner gloves.

- Fiberpacks or corrugated cardboard containers. Release the locking ring and remove the ring and lid by hand using heavy matted cloth gloves over a pair of chemical-resistant gloves.

- Plastic or polyethylene carboys and plastic-lined drums. If it is necessary to open one of these containers, use a non-sparking aluminum, brass, or beryllium bung wrench of the proper size. Do not use a bung wrench or any distended drums of this type; remote methods must be applied.

- Plastic, kraft paper, burlap, or cloth bags. Use a trowel or sampling trier. Once sampled, the bags should be resealed or placed in an overpack.

A.3.5 Resealing and Relocating Containers

All containers opened for sampling must be resealed to prevent escape of vapors and possible reactions from rainwater, air, etc. The resealing methods will depend on the opening methods used and will include:

- Replacing the bung, screw cap, etc.

- Replacing the lid and retention ring.

- Placing the container in an overpack (larger container) when it cannot be resealed by any other method.

- If a hole is drilled, using a special rubber or plastic plug. A drum bonnet should be used to ensure that rainwater does not seep around the plug of a drum.

It is important to note that these resealing methods are for the purpose of preventing leakage from the container while it is in storage on-site. If the container is to be moved off-site, the requirements of DOT regulations regarding transportation of such containers must be met. These regulations generally require more rigorous sealing procedures or overpacking.

Once the container is sampled and resealed, it should be left where it cannot react with other containers on-site. For a small number of containers, the staging and opening area may subsequently become the storage area. In any event, the sampled containers should be placed in an area away from other groups of containers on-site. The reason is that slowly progressing chemical reactions can start when a container is opened and the contents exposed to air or because of the disturbance caused by handling the container. Such a reaction could take hours or even days to occur. Another reason for segregation and identification of containers for recovery is for evidence requirements.

A.3.6 Public Evacuation/Alert Considerations

Several site-specific factors will influence the decision to evacuate or alert nearby citizens. These include:

- Type, density, and proximity of residences, shopping or other commercial or business areas, factories, highways, railroads, airfields, or other transportation routes that may have to be closed. This information will be available from the preliminary assessment and site inspection.

- Proximity of other facilities that could cause or propagate a fire, explosion, or toxic release on the site. This information will also be known from the preliminary assessment and site inspection.

- Presence of explosive, flammable, or volatile substances on-site. The probability of encountering explosive (i.e., directly detonable or shock-sensitive materials as opposed to explosive vapor-oxygen mixtures) will have been reduced by the screening procedures applied during earlier site evaluations. Preliminary assessment and site inspection may also provide indications or confirm the presence of flammable or toxic compounds. Of these known hazards, those having the greatest potential for atmospheric spread off-site should be used to estimate evacuation hazard distances, as described below. For example, if several volatile toxic liquids or toxic vapors are present, those having the greatest toxic potential in air, as measured by an IDLH or TLV concentration value, should determine the hazard distance, since these have the potential to remain hazardous while being carried atmospherically the greatest distances off-site. Atmospheric drift of a toxic or flammable vapor cloud or plume can often extend farther from the site than explosive hazards and hence potentially threaten more people. Similarly, thermal radiation hazards generated by even a large on-site fire generally extend shorter distances than possible atmospheric drift of a vapor cloud.

- Potential for an accident on-site which could result in an atmospheric release of flammable or toxic liquid or vapor. This possibility should be remote if only one container is opened at a time and if that container is segregated from others. The most important parameter for any accident is the rate of liberation of flammable or toxic vapor; unfortunately, this is often the most uncertain quantity.

- Prevailing wind speed and direction and atmospheric stability strongly affect the pattern of atmospheric spread of a gas cloud off-site. Quantitative estimates of these parameters at the time of an actual accidental release should be used in calculating an estimated evacuation radius, as detailed in Section A.3.6.1 below. However, because wind direction is subject to rapid and unpredictable variations, and because

recycled paper
ecology and environment

atmospheric drift is greater under stable atmospheric conditions and low wind speeds (say, 5 mph), it is usually best to take a conservative approach and use these worst-case conditions.

A.3.6.1 Plausible Accident Scenario

A plausible but hypothetical scenario for an accident during container opening operations would involve a release, from only the one 55-gallon drum being opened, of a volatile toxic liquid which rapidly vaporizes and forms a non-burning but continuous source of a toxic vapor plume. The rate of vapor generation and release can be calculated based on the assumption that the upright drum is completely open at the top and on a knowledge of the vapor pressure and some other readily available chemical properties of the chemical involved. For simplicity, the fact that a complex mixture of chemicals may actually be involved is neglected, and the most toxic liquid or vapor is treated as if it were the sole component.

A.3.6.2 Estimating Hazard Evacuation Radius

Once the rate of atmospheric release of vapor is estimated for the accident scenario, outside assistance from any of several sources may be sought to estimate an atmospheric dispersion distance appropriate for the flammability or toxicity of the chemical involved. This estimate would then be used as a basis to recommend an evacuation radius to the responsible official, who will actually determine the necessity and extent of public evacuation. Outside assistance may be obtained from EPA's Emergency Response Team (ERT), the U.S. Coast Guard's Hazard Assessment Computer System (HACS), or from E & E's hazard analysts at corporate headquarters in Buffalo, New York.

The above hypothetical scenario involving a single drum may be used in planning precautionary evacuations prior to the start of a dangerous container opening operation. On the other hand, in response to an actual accident, the release rate may be estimated if the number of containers releasing and the size of the opening in each such container can be estimated by observation.

The decision to evacuate or alert the public off-site as a precautionary measure is dependent on the degree of hazard presented by

the materials known to be present at the site. For the scenario described above, it would be possible to derive a table of numerical hazard distances for several commonly encountered chemicals. These distances may then be used as numerical decision criteria for precautionary evacuation, by comparing them to the known distances of populated areas from the site.

recycled paper
ecology and environment

APPENDIX A

DRUM DATA SHEET

Sampling: Date Sampled: _____

Drum ID#: _____ Time: _____

Estimated Liquid Quantity: _____

Grid Location*: _____

Staging Location: _____

Sampler's Name: _____

Drum Condition: _____

Physical Appearence of the Drum/Bulk Container: _____

Oder: _____

Color: _____

pH: _____ % Liquid: _____

Laboratory Analytical Data: _____ Date of Analysis: _____

Compatability: _____

Hazard: _____

Waste ID: _____

Treatment Disposal Recommendations: _____

Approval

Lab: _____ Date: _____

Site Manager: _____ Date: _____

* Area of site where drum was originally located

APPENDIX B

DRUM OPENING DEVICES

APPENDIX B2

DRUM DEHEADER

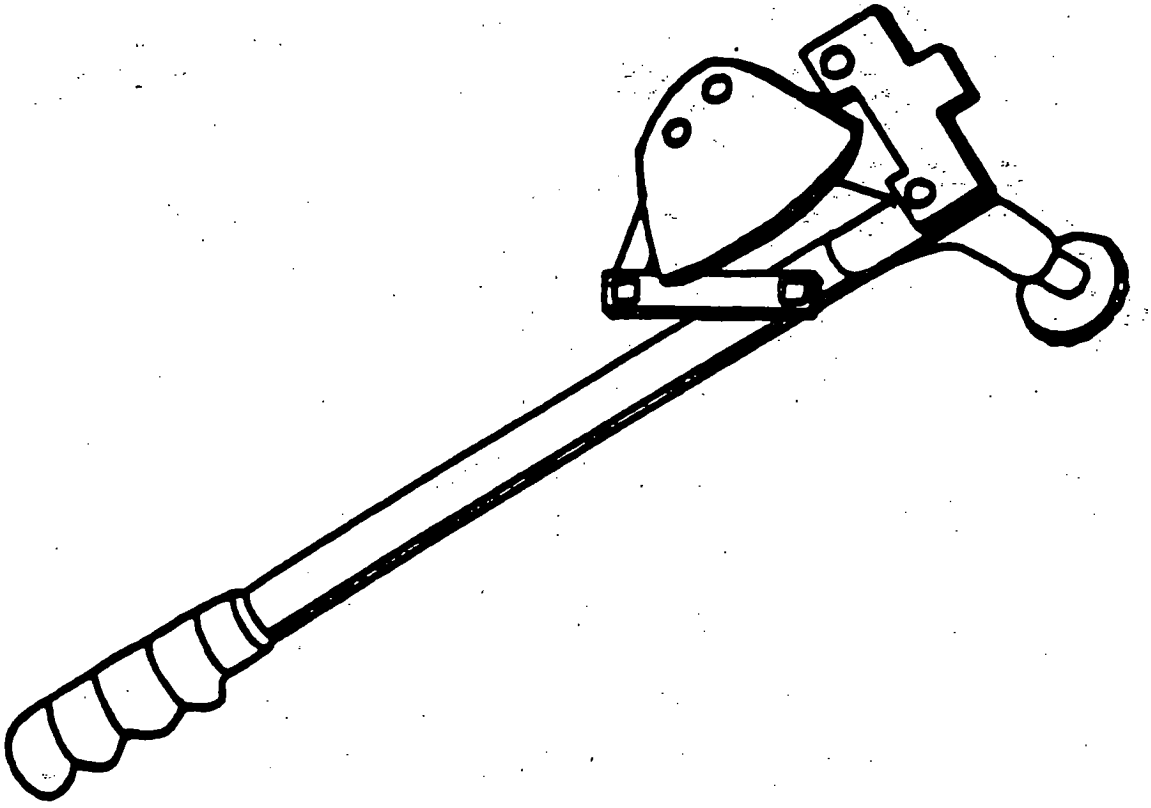

APPENDIX B4

BACKHOE SPIKE

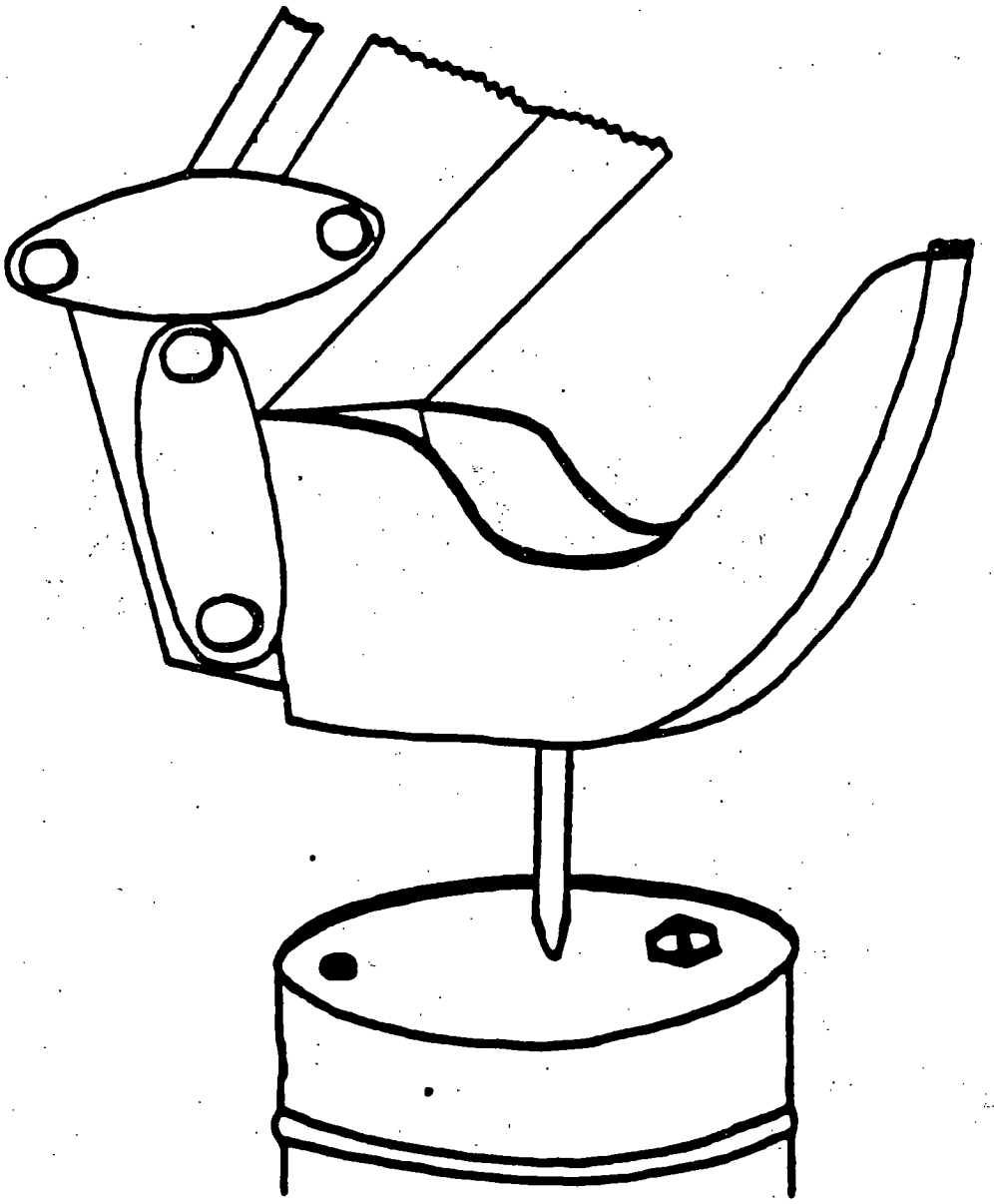

recycled paper
ecology and environment

APPENDIX B6

PNEUMATIC BUNG REMOVER

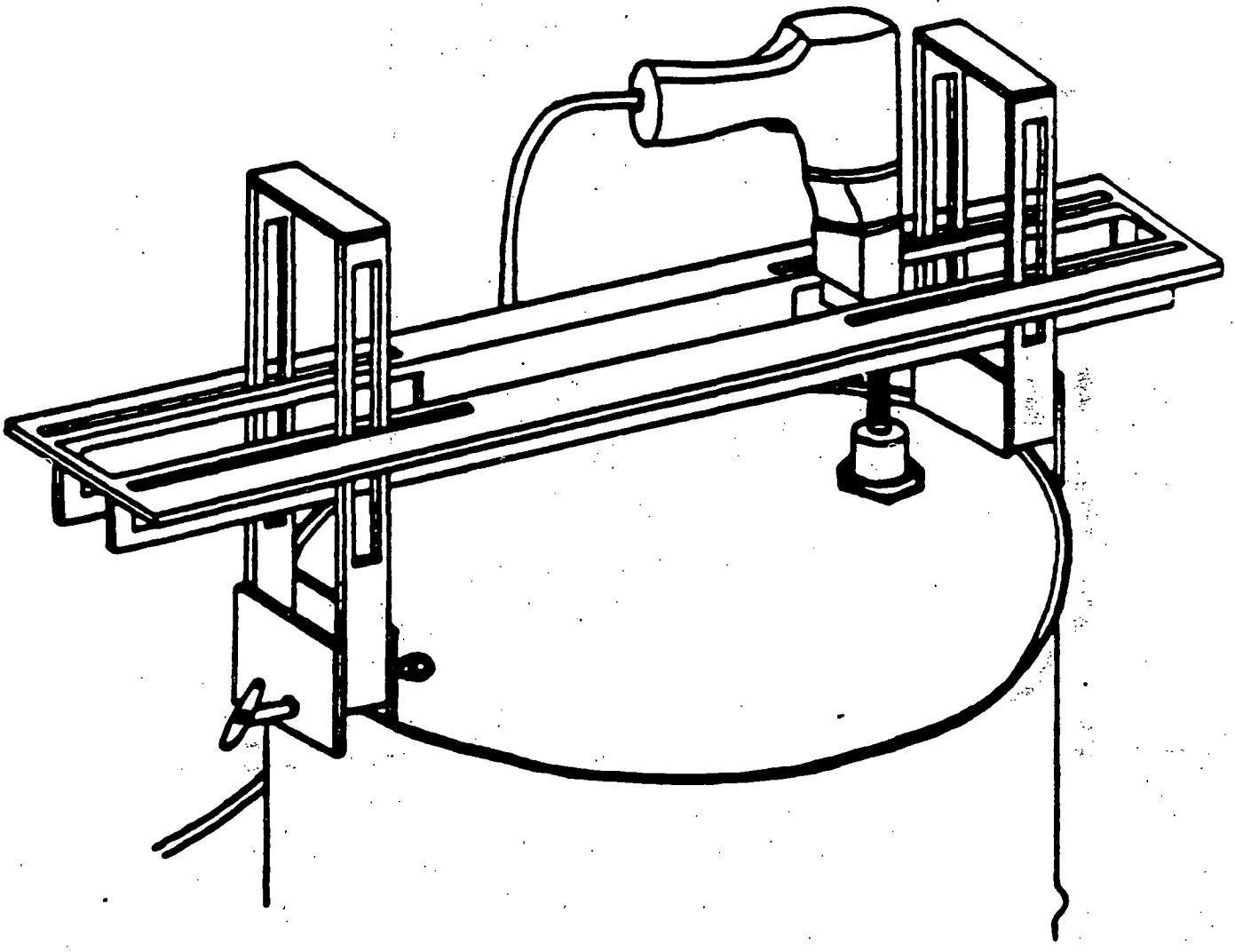

recycled paper
recycled paper

ecology and environment
ecology and environment

ATTACHMENT L
DRUM STAGING AND OVERPACKING

2.1.4 Hazards and SOPs Associated with Drum Staging and Overpacking:

Hazards

1. Direct skin contact and inhalation, ingestion threat from hazardous materials.
2. Poor physical condition of many of the drums. Many are extremely rusty and have holes in the sides. Thus, a high potential exists for spills and splashes during drum handling operations.
3. Routine heavy equipment hazards.
4. Physical hazards associated with drum handling operations - potential for crushed fingers and toes, strained muscles, and back injury from moving/lifting heavy objects.
5. Operation of heavy equipment: eg. backhoe with drum grappler.

SOPs

1. Use of Level B or Level C personal protective equipment. Chemical resistant coveralls, gloves, splash shields, hard hats, and steel-toed boots should be used when handling drums, working with open liquids or in the vicinity of open liquids.
2. Absorbants will be staged in the exclusion zone in the event of a spill.
3. Safe work practices will be used to prevent physical injury.
4. Emergency spill materials will be staged and immediately available.
5. Drums will be staged on a polyethylene-line containment pad.

recycled paper ecology and environment

ATTACHMENT M
EMPTY DRUM CRUSHING

DRUM CRUSHING

- Check system to be sure it is properly (electrical, etc.) setup and personnel experienced in operation.
- Beware of pinch points, both in loading the drum, crushing and removal.
- Wear hearing protection as required.
- Check drum to ensure it is completely empty before crushing.
- Stage work area so that drums can be brought to the crusher and removed once crushed.
- Operator must maintain a clear egress route from the crusher at all times.
- Door must be kept closed during crushing.
- Close top drums must have bung removed prior to crushing.

ATTACHMENT N
SITE WALKTHROUGHS/ENTRY

SITE ENTRY SOP

Hazards associated with site entry:

- Possible personal contamination.
- Possible physical harm to senses and/or internal organs.
- Personnel accountability.

SOP's

- All personnel are to wear personal protective equipment as designated by site On-Scene Coordinator.
- All personnel are to sign in and out before entering the hot zone areas. Time in and time out sheets are used to determine a head count in the event of emergencies.

recycled paper

STANDARD OPERATING PROCEDURES FOR SITE ENTRY

JANUARY 1990

Prepared by

Ecology and Environment, Inc.
368 Pleasantview Drive
Lancaster, New York 14086

CONTENTS

Section		Page
1	INTRODUCTION	1
1.1	OBJECTIVES	1
1.2	SCOPE AND LIMITATIONS	1
2	POLICIES AND DOCUMENTATION	2
2.1	POLICIES	2
2.2	DOCUMENTATION	3
3	FIELD OPERATIONS	4
3.1	SITE SAFETY CONSIDERATIONS	4
3.1.1	Background Search	4
3.1.2	Site Categorization	5
3.1.3	Site Safety and Work Plan Development	5
3.1.4	Meetings and Training	12
3.1.5	General Safety Rules and Requirements	13
3.1.6	Radiological Hazards	14
3.2	ORGANIZATION OF THE FIELD INVESTIGATION AREA	14
3.2.1	Exclusion Area (Control Area)	17
3.2.2	Hot Line	17
3.2.3	Contamination Reduction Area	17
3.2.4	Contamination Control Line	18
3.2.5	Support Area (Administrative)	18
3.2.6	Wind Direction	18
3.3	ORGANIZATION FOR WORK	18
3.3.1	Command and Control	18
3.3.2	PDS Operator	20
3.3.3	Safety Officer	20
3.3.4	Work Party (Sampling Team)	20
3.4	AIR MONITORING AND CHARACTERIZATION EQUIPMENT	20
3.4.1	Explosimeter	21
3.4.2	Oxygen Detector	21
3.4.3	Draeger Tubes	23
3.4.4	Radiation Instruments	23
3.4.5	HNU Photoionizer	24
3.4.6	Organic Vapor Analyzer (OVA)	24
3.4.7	OVA in the Gas Chromatographic (GC) Mode	24
3.4.8	Other Equipment	26

LIST OF FIGURES

Figure		Page
3-1	Site Type I Characteristics.	6
3-2	Site Type II Characteristics	7
3-3	Site Type III Characteristics.	8
3-4	Decision Guidance for Assigning PEL on Type III Sites	9
3-5	No Apparent Respiratory Hazard	10
3-6	Site Safety Procedures	15
3-7	Organization of the Field Investigation Area	16
3-8	Organization for Work.	19
3-9	Considerations for Air Toxics Monitoring Strategies.	22
3-10	Primary Field Air Quality Survey Instruments	25
3-11	Initial Site Entry Action Levels	27
3-12	Federal Standards for Radiation Workers.	28
3-13	Check List for Entry into a Hazardous Waste Site . .	30
3-14	Egress from the Hazardous Waste Site	31
3-15	Level A PDS.	33
3-16	Level B PDS.	35
3-17	Decontamination Solutions.	36

1 INTRODUCTION

A key element in any hazardous waste site investigation is actual entry into the site. A safe and proper entry requires a careful and coordinated team effort before, during, and after actual entry.

The entry team must conduct and complete reconnaissance of the site, as well as undertake other tasks in unfamiliar surroundings, in a variety of situations, and with unknown hazards. The goals are to complete the tasks while maintaining and protecting the health and safety of E & E and subcontractor personnel.

E & E has established Standard Operating Procedures (SOPs) to serve as training and guidance tools during the planning and implementation of all phases of a site investigation. Of primary concern is the health and safety of personnel. This is organized under the Corporate Health and Safety Program and blueprinted in the Corporate Health and Safety Plan for Toxic and Hazardous Substances. Other phases of investigations are addressed in other SOPs, thus, those SOPs should be carefully reviewed prior to a site investigation.

This document presents site entry procedures and guidelines for all E & E personnel working on hazardous waste sites.

1.1 OBJECTIVES

The primary objective of the Site Entry SOP is to provide operating guidelines and to establish procedures for the entry and inspection of hazardous waste sites. It encompasses preplanning, site safety considerations, entry procedures, on-site guidelines, site egress, and decontamination procedures. This document is not designed to present site-specific procedures, but describes procedures applicable to a wide variety of hazardous waste sites.

1.2 SCOPE AND LIMITATIONS

The procedures outlined in this SOP are applicable to all E & E personnel who participate in the inspection or investigation of sites where chemical or biological contamination is known or suspected.

The provisions of this document are not binding on non-E & E personnel, unless otherwise specified under contractual agreement. However, non-E & E personnel will be encouraged to follow these procedures.

This document is applicable only to the conditions and limitations specified within and does not address operations at radioactive or asbestos sites, or barrel-opening operations. For asbestos inspection,

recycled paper ecology and environment

assessment, or abatement oversight projects, please refer to E & E Corporate Guidelines for Asbestos Inspection/Assessment, Laboratory Analysis, and Abatement Oversight, October 1987.

2 POLICIES AND DOCUMENTATION

2.1 POLICIES

The health and safety of site inspection personnel has precedence over all other considerations in dealing with hazardous materials. When inspection personnel must be exposed to hazardous substances, every effort should be made to ensure that concentrations are as low as reasonably achievable. E & E has established specific health and safety policies and guidelines, set forth in the E & E Health and Safety Plan for Toxic and Hazardous Substances.

Entry into a known or suspected contaminated waste site will be conducted only when such entry is required to gather information not obtainable by any nonentry means. The time on site will be kept as short as possible. Entry onto any hazardous waste site is expressly forbidden unless conducted as part of a work assignment.

The Regional Manager/Supervisor and/or his or her designated assistant will appoint a Site Safety Officer (SSO) for each on-site inspection or investigation where there is suspected hazardous substance contamination.

The SSO, in consultation with the Project Team Leader (PTL) will, in accordance with this and other SOP documents, make decisions regarding:

- The potential hazards present;
- The type of protective clothing to be worn;
- The type of respiratory protection to be worn;
- The type of decontamination solution(s) to be used;
- The distance to the exclusion area boundary; and
- The location of the Command Post (CP), the personnel decontamination station (PDS), and the contamination control line (CCL).

The PTL will assume full responsibility for the action of E & E personnel only. The PTL will assume no responsibility for the action of non-contractor personnel. Non-contractor personnel entering the

hazardous waste site will be advised of the hazards present and safety precautions deemed necessary. If non-contractor personnel choose to enter the hazardous waste site in disregard of the PTL's advice, then official written notification will be made in the daily log, and the Regional Manager/Supervisor will be advised of the situation. The PM or regional manager will be advised of the situation. If the actions of non-E & E personnel result in a threat to the welfare of E & E personnel, the PTL can choose to cease on-site operations until the situation is resolved.

2.2 DOCUMENTATION

Before site entry, documentation should be completed to address the legal, health, and safety issues of site access. Legal issues concerning E & E's right to enter the site are resolved by obtaining permission to access the property(ies) that incorporate the site. This permission may be granted by the property owner(s) or by appropriate judicial authorities. Documentation of permission, in the form of a court order or written authorization, should be available for disclosure at the site during the investigation.

The PTL, PM, and SSO will be responsible for maintaining all records, logs, and reports required for, or generated by the on-site activities (refer to E & E's logbook SOP). Records will be kept of the following:

- A log of all information (i.e., calibrations) and all data from personnel monitoring devices and instruments (e.g., dosimeters and personnel air sampling devices);
- An on-site activity log (updated hourly) to record the progress of each activity, field data from each sample collected, tracking numbers, and other information for all samples; and
- An on-site safety log of all personnel, safety activities (e.g., monitoring activities and results), changes from the original safety plan, protective steps taken, special problems encountered, and solution measures taken.

In addition, photo-documentation of site conditions is vital in any investigation and can prove to be indispensable for later use in site evaluations, reports, or litigation proceedings. It is important that all information concerning each photograph be recorded in the field logbook.

3 FIELD OPERATIONS

3.1 SITE SAFETY CONSIDERATIONS

Upon initial entry into a site, the investigation team performs a variety of tasks in unfamiliar surroundings with unknown hazards. The team members wear protective clothing and respiratory protection devices that restrict and hinder both movement and vision. If the entry is to be performed smoothly and safely, proper planning and procedures must be established.

The necessity to enter a site must first be evaluated before any other site questions can be addressed. Site access will be considered a work alternative only if it is to gather information that is not available from other off-site sources.

Assurance of a safe investigation hinges on proper planning and implementation. The following are four fundamental site-safety components:

- Thorough background search for site characterization,
- Development of a comprehensive Site Safety Plan (SSP) and work plan,
- Implementation of approved site-specific safety plan, and
- Use of common sense in safe work practices.

3.1.1 Background Search

The background search occurs during the planning stages of the projects and is inherently linked to the formation of the SSP and work plan (Section 3.1.2). Staff conduct a review of all background material and available data, focusing on the past history of the site, the materials used or disposed of at the site, data and information from previous investigations, past site conditions, as well as present activity and condition of the site. This information is available from a variety of sources:

- Client records;
- Aerial photographs;
- Federal, State, or local agency files; and
- National or regional data bases.

3.1.2 Site Categorization

Because there are so many, varied sites, E & E has developed three categories or types of sites for planning purposes. Using these types provides a viable means of selecting levels of personnel and respiratory protection:

- **Site Type I:** Apparent No-Problem Site (see Figure 1). All background information indicates that there is no hazard associated with this site. If the correct response to all of the items depicted in Figure 1 can be obtained, then E & E personnel may conduct the investigation in Level D protection.

- **Site Type II:** Industrial Workplace Site (see Figure 2). Team members must conduct extensive research to determine if the safety precautions in force at the industrial workplace sites are adequate for E & E personnel. (See Figure 2 for the review process.) If the review process indicates that the existing level of protection is adequate, then the team may enter the site in the same level of protection as the industrial worker. If review indicates a higher level of protection is required, these findings should first be discussed with the proper site authorities. It would not be prudent for team members to appear at a site in a higher level of protection without first informing the site managers.

- **Site Type III:** Legitimate Uncontrolled Hazardous Substance Facility (see Figure 3). For a legitimate uncontrolled hazardous substance facility, the need for higher levels of protection should be evaluated against the potential of skin contact and inhalation. To assist in this evaluation, E & E has developed decision guidance matrices for assigning personnel equipment levels on a Type III site (see Figure 4). These decision matrices require simple "yes" or "no" answers to achieve succeeding levels of decision. After determining the proper clothing for site entry, teams must determine if there is an apparent respiratory hazard. Figure 5 lists conditions that should be considered in determining if there is an apparent respiratory hazard. If no respiratory hazard is present an initial entry survey should then be conducted. In cases for which no background information is available to determine respiratory hazard, the SSO should require use of respirators for site entry.

3.1.3 Site Safety and Work Plan Development

Many health and safety concerns associated with the inspection or investigation of a hazardous waste site are related to the nature of the site and the extent of the work to be performed. Consequently, the SSP is a site-specific document that lists the objectives of the on-site

recycled paper
recycled paper
ecology and environment

SITE TYPE I:
"APPARENT NO-PROBLEM SITE"

REVIEW PROCESS:

1. **ATTEMPT TO COMPLETE INVESTIGATION WITH PERIMETER INSTRUCTIONS**
2. **IF THERE IS A NEED TO ENTER, DO SO (LEVEL D) ONLY IF THE FOLLOWING APPLY:**
   - **a. Task limited to brief visual inspection**
   - **b. No containers of unknown or known hazardous substances visible**
   - **c. No unknown odors or known odors of hazardous substances**
   - **d. Good natural air circulation**
   - **e. Visible or historic evidence of accessibility to humans; no ill health effects**
   - **f. No visible dead animals or vegetation**

Figure 3-1 SITE TYPE I CHARACTERISTICS

SITE TYPE II:
INDUSTRIAL WORKPLACE SITE

REVIEW PROCESS:

1. **REVIEW SITE HISTORY; ESTABLISH TYPE OF WORKPLACE**
2. **INVENTORY WORKPLACE CHEMICAL HAZARDS**
3. **ESTABLISH APPLICABLE INDUSTRY STANDARDS (CONSULT REGIONAL OSHA/NIOSH OFFICES)**
4. **IF FACILITIES ONGOING HEALTH AND SAFETY PROGRAM IS ACCEPTABLE AND IF INVESTIGATIVE TASK PRESENTS NO ADDITIONAL RISK, USE WHAT THEY USE AS A MINIMUM**

Figure 3-2 SITE TYPE II CHARACTERISTICS

SITE TYPE III:
LEGITIMATE UNCONTROLLED HAZARDOUS SUBSTANCE FACILITY

1. EVALUATE NEED FOR LEVEL A — EMERGENCY ACTION
2. SPLASH PROTECTION NEEDED FOR INITIAL ENTRY?
3. CONDUCT INITIAL ENTRY
4. IS THERE AN APPARENT RESPIRATORY HAZARD?

   YES—Continue investigation in SCBA s and any necessary splash protection

   NO— Continue investigation without respiratory protection
5. WORK CONTINUES WITH AMBIENT MONITORING AND REVALUATION OF PERSONAL PROTECTION NEEDS

Figure 3-3 SITE TYPE III CHARACTERISTICS

DECISION GUIDANCE FOR ASSIGNING PEL ON TYPE III SITES

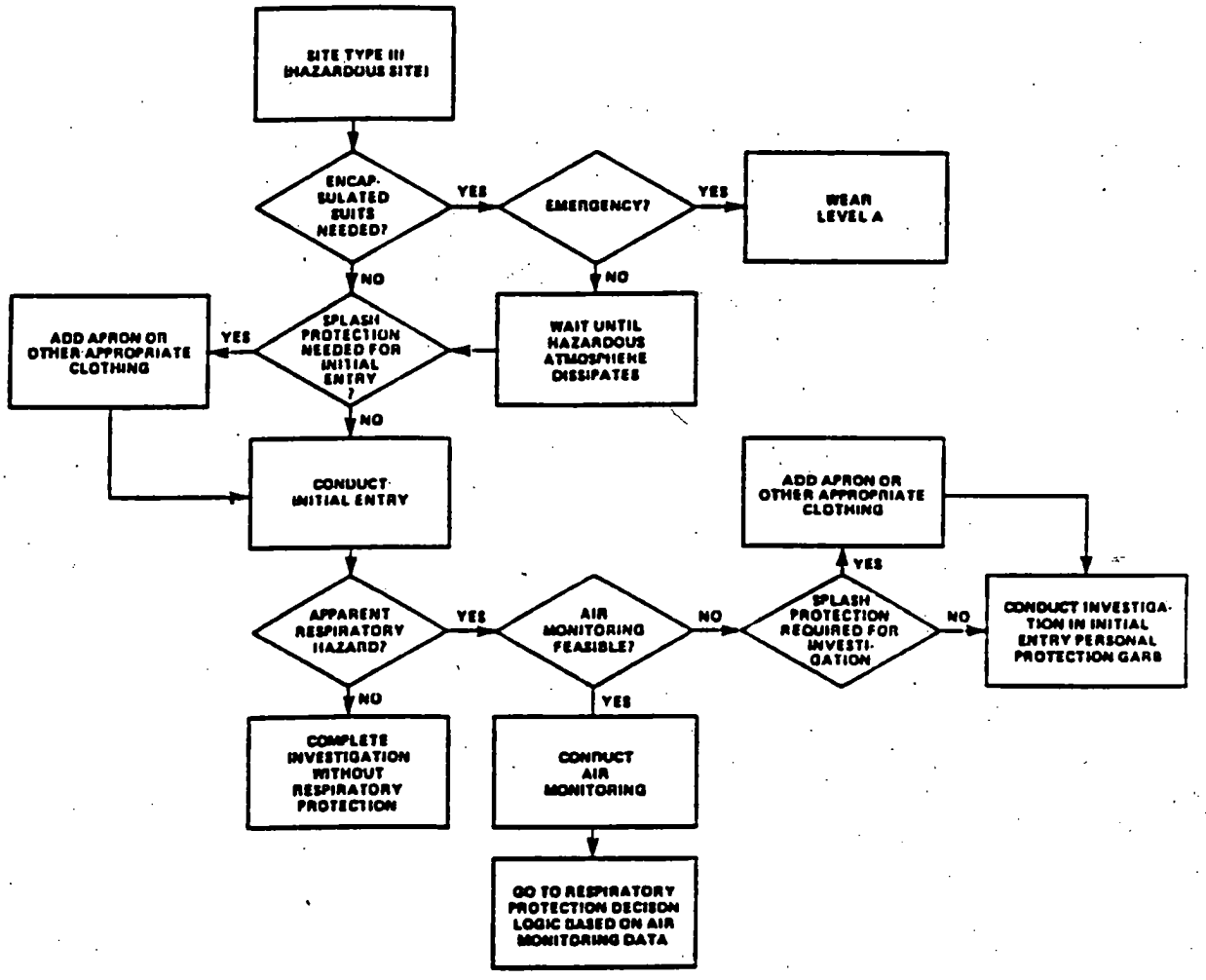

Figure 3-4 DECISION GUIDANCE FOR ASSIGNING PEL ON TYPE III SITES

recycled paper

NO APPARENT RESPIRATORY HAZARD

1. NO DRUMS, LAGOONS, OR OTHER CONTAINERS OF UNKNOWN CONTENTS IN CLOSE PROXIMITY TO WORK AREA
2. SITE HAS GOOD AIR CIRCULATION
3. NO ILL HEALTH EFFECTS ASSOCIATED WITH SITE
4. INVESTIGATION DOES NOT REQUIRE EXCAVATION, DRILLING, OR DRUM OPENING
5. HISTORICAL REVIEW GIVES GENERAL IDEA OF SUBSTANCES PRESENT
6. OTHER?

Figure 3-5 NO APPARENT RESPIRATORY HAZARD

work and describes the health and safety procedures and protocols that will be followed during the completion of those work objectives. (See Appendix A - Site Safety Plan).

The plan provides a written outline of the steps that are to be followed, eliminates the uncertainties of memory, and provides a checklist for preparing the site entry. It forces the writer to identify and organize the available data and then to construct a logical, coherent, and workable plan based on the data. As a written report, it is to be reviewed by peers, who should identify inadequacies.

First, the plan must include site background information, safety information, and instructions and procedures for both routine and emergency situations to ensure that the risk of accident or injury is minimized. Second, it should allow for contingencies that will permit adaptations, at the discretion of the PM and the SSO, as new information is gathered and field conditions fluctuate. Finally, the plan must be presented in a concise, written format so that it is available as a source of site-specific safety and health information to team members.

Under certain conditions, safety plans may be subject to modifications by the PTL and SSO on site. If the danger appears to be greater than originally anticipated, the SSO has the option of immediately withdrawing the team or increasing the level of protection. If the danger was overestimated, the SSO can allow the site to be examined at a lower level of protection, provided that the SSP describes the rationale and the specific protection level to which the site can be downgraded.

When site conditions warrant modification to the operating procedure or the level of personal protection required, the changes and conditions should be thoroughly documented. If the modification results in significant changes, such as downgrading to a lower level of protection, the RSC will be informed. The SSO must present the rationale for making the changes and must provide sufficient monitoring data to justify the reduction in the level of protection. Team members will not use a level of protection less than that required in the SSP for each specific exclusion area or subarea until that decision has been approved by the RSC.

The work plan, like the safety plan, is a written outline of the work to be performed on site and the methods used to complete the investigative tasks. Because it is peer reviewed, inadequacies or unsafe procedures should be identified and modified. In many cases, the work plan is produced as part of the project proposal, or for review by the client.

A work plan should contain details of the site investigation that include, but are not limited to the following:

- Initial entry and characterization;
- Inventory of site materials and conditions;
- Sampling plan and analysis required;
- Geophysical explorations;
- Groundwater monitoring-well installation;
- Decontamination methods; and
- Disposal of site-derived materials (drill cuttings, decontamination fluids, disposable gear).

3.1.4 Meetings and Training

Before on-site activities are initiated, the SSO will coordinate to the degree necessary (based on the site hazard level as determined by the PM) with local medical and emergency authorities to inform them of planned activities and special treatment or response needs in the event of injury or exposure.

Before the site entry, the SSO will conduct as many meetings or training sessions as necessary to ensure that all personnel who enter the site have a thorough understanding of health, safety, and operational aspects of on-site activities. Issues to be addressed during these meetings and training sessions may include, but are not limited to the following:

- Potential hazards associated with the site;
- Safety procedures (including the route to the designated emergency medical facility), specific hazards associated with on-site contaminants (as presented on the Hazard Evaluation of Chemicals worksheet), and team response organization and responsibilities in the event of an injury or contamination incident;
- Monitoring instrument operation and monitoring frequency requirements;
- The level(s) of personnel and respiratory protection required in each phase of planned on-site activity;
- Protective equipment fit and operation;

- Decontamination requirements and procedures;
- Site-control procedures, including the designation of work and exclusion zones, and site-entry and -exit procedures; and
- Contingency plans to protect the public and the environment in the event of an emergency.

All team members (including subcontractors and supervisory personnel) will sign the On-Site Safety Meeting Form in the SSO's copy of the SSP at the end of the safety meeting(s). By signing the form, each team member indicates that the on-site hazards and site safety procedures and protocols have been explained by the SSP to his or her understanding. The form must be signed before site entry.

3.1.5 General Safety Rules and Requirements

Team members are aware of their responsibility to follow the general on-site safety practices and regulations that are necessary to meet the goals of E & E's Health and Safety Plan. These include the following:

1. There will be no eating, drinking, or smoking in the exclusion area or the contamination reduction area.
2. All personnel must pass through the contamination reduction area when entering or exiting an exclusion zone at sites where an exclusion zone has been established.
3. All monitoring requirements specified in the SSP will be carried out by trained personnel with properly maintained and calibrated equipment.
4. Emergency equipment (e.g., portable showers, eye washes, fire extinguishers) will be on the hot line side of the contamination reduction area for quick access when such equipment has been included in the SSP.
5. Specific emergency equipment requirements for the clean side of the contamination reduction area will be specified in the SSP.
6. At the end of the workday, all personnel who have worked inside the exclusion zone (including the contamination reduction area) will take a hygienic shower, regardless of perceived exposure possibilities.
7. All supplied breathing air shall be certified Grade D (American National Standard, Commodity Specification for Air) or better.

recycled paper
ecology and environment
00090.PM

8. Where practical, all tools and equipment shall be spark-proof, explosion resistant, U.L. (Underwriters Laboratory) bonded and grounded.

9. Fire extinguishers, for use on equipment or small fires, will be on all sites in a location familiar to all site personnel.

10. All team members will be aware of emergency response and emergency evacuation responsibilities, procedures, protocols, and signals. Deviations from standard emergency protocols will be specified in the SSP. Personnel responsibilities will be outlined before site entry.

11. A first aid kit, which has been stocked to handle all of the first aid situations covered in the Red Cross standard first aid course, will be available in a marked location on site at all times. Additional first aid equipment needs and procedures will be specified in the SSP, as needed.

12. Safety and training meeting(s) will be held before site entry and, if necessary, each morning, to cover or review all site specific safety issues.

Additional guidelines are presented in Figure 6.

3.1.6 Radiological Hazards

At known or suspected contaminated waste sites, radiological hazards are not necessarily isolated from other hazards which may be physical, chemical, or biological. The inspection team must always be alert to the potential presence of radiological hazards which may represent an equal or greater threat to health and safety than the hazardous waste.

If the historical background study does not indicate that radiological materials are present and the initial entry survey shows that there is radiation above the background level, all E & E personnel will leave the site; and the SSO will notify the E & E RSC.

3.2 ORGANIZATION OF THE FIELD INVESTIGATION AREA

There are no absolutes in organizing the layout of the field investigation area. Distances between each of the various components at the field site will vary depending on the weather, terrain, location, and types of contaminants on the site. The knowledge acquired through planning, together with an off-site reconnaissance around the perimeter of the suspected site, generally will provide the information needed to establish a rough boundary for the site. See Figure 7 for standard organization of the field investigation area.

SITE SAFETY PROCEDURES

- OBSERVE BUDDY SYSTEM
- PLAN YOUR ACTIONS—BE DELIBERATE
- MAINTAIN CONTACT WITH SAFETY OFFICER
- PRACTICE CONTAMINATION AVOIDANCE
  - Don't sit or kneel on ground
  - Don't ground equipment
  - Avoid obvious contamination
- DON'T CLIMB OVER BARRELS OR OBSTACLES
- FOLLOW PREDESIGNATED ROUTES
- MONITOR (AS REQUIRED) FOR
  - Radiation
  - O_2 levels
  - Explosive hazard
  - Buried metal
- MONITOR WEATHER CONDITIONS
  - Heat stress
  - Cold (frostbite)
  - Electrical storms
  - Wind direction

Figure 3-6 SITE SAFETY PROCEDURES

recycled paper
ecology and environment
00C30.PM3

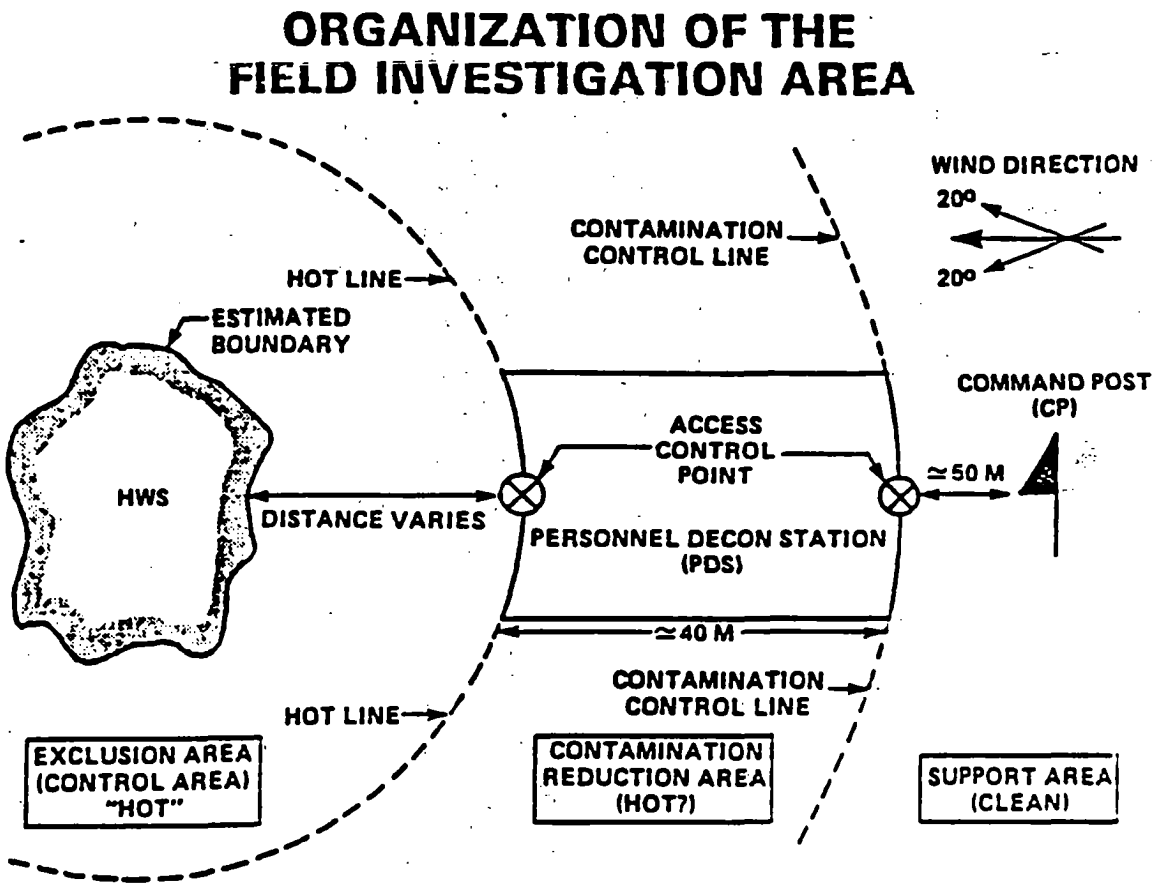

Figure 3-7 ORGANIZATION OF THE FIELD INVESTIGATION AREA

When establishing the organization and layout of the area, the two prime objectives are to minimize the potential for exposure and to restrict the spread of contaminated materials outside of the hazardous waste site.

3.2.1 Exclusion Area (Control Area)

The first priority in approaching the area of an uncontrolled chemical or biological waste site is to establish an exclusion or control area. This area acts as a buffer zone between the known or suspected contaminated area and the clean area. Initially, it is always assumed that the surface within the exclusion area is contaminated. The size of the exclusion area will vary depending on the nature of the site. The factors considered in establishing the exclusion area are:

- Nature and toxicity of the site contaminants,
- Explosive potential,
- Meteorological condition,
- Topography,
- Concern for the unprotected public, and
- Emergency egress routes from the site.

Safety is the primary consideration to be followed in the establishment of the exclusion area boundary. After an initial assessment of the site has been made by an initial entry party, it is always possible to reduce or increase the size of this area.

3.2.2 Hot Line

The hot line is located on the outer exclusion area boundary near the chemically or biologically contaminated area. This line is arbitrarily selected as the point at which a deliberate attempt is made at controlling any contamination picked up by personnel as they work on the hazard site. The access control point on the hot line is the point established through which all personnel are to enter and egress the exclusion area. The hot line can be adjusted down-range to reflect additional information learned about the site.

3.2.3 Contamination Reduction Area

The contamination reduction area lies between the outer exclusion area boundary and the contamination control line. In this area, a deliberate attempt is made to control and reduce contamination picked up by personnel returning from the exclusion area. This area, designated

recycled paper

for decontamination operations, is called the personnel decontamination station (PDS). Operations within the PDS are discussed in Section 3.7.

3.2.4 Contamination Control Line

The contamination control line is the rear boundary of the contaminated reduction area and is the line separating the possibly contaminated area from the clean area. Entry from the clean support area to the contamination control area is always made through an access control point on the contamination control line. No person may cross this line unless he or she has the proper level of protection.

3.2.5 Support Area (Administrative)

The support area is always established in a clean area. It contains the command post (CP) and other support elements. The distance from the contamination control line to the CP is approximately 50m, adjustable according to known site conditions. The CP is the center of command and control for the entire operation; it is always upwind of the contamination area and, if possible, on high ground to provide visual observation of the entire area.

3.2.6 Wind Direction

The guiding principle in organizing the field site is a simple one. If at all possible, the CP should be located upwind from the hazard area. If terrain or water will not accommodate this arrangement, a cross wind is acceptable. If the CP must be located downwind from the site, all personnel may have to don appropriate breathing apparatus. Significant variations in normal prevailing winds can be monitored through maintaining on-site weather status reports and making use of local weather reports for daily planning and updating.

3.3 ORGANIZATION FOR WORK

The personnel requirements for conducting operations on a hazardous substances site are dependent on a number of factors. For simplicity, the present discussion focuses on a five-member team (see Figure 8).

3.3.1 Command and Control

Command and control of the work site is exercised from the CP, which is manned by a CP supervisor or team leader. The CP will maintain radio contact with other team personnel and, by radio, will direct their actions. The CP supervisor also maintains contact with the PM and other personnel not on site. In a five-person team, only one team member (usually the team leader) will remain in the CP.

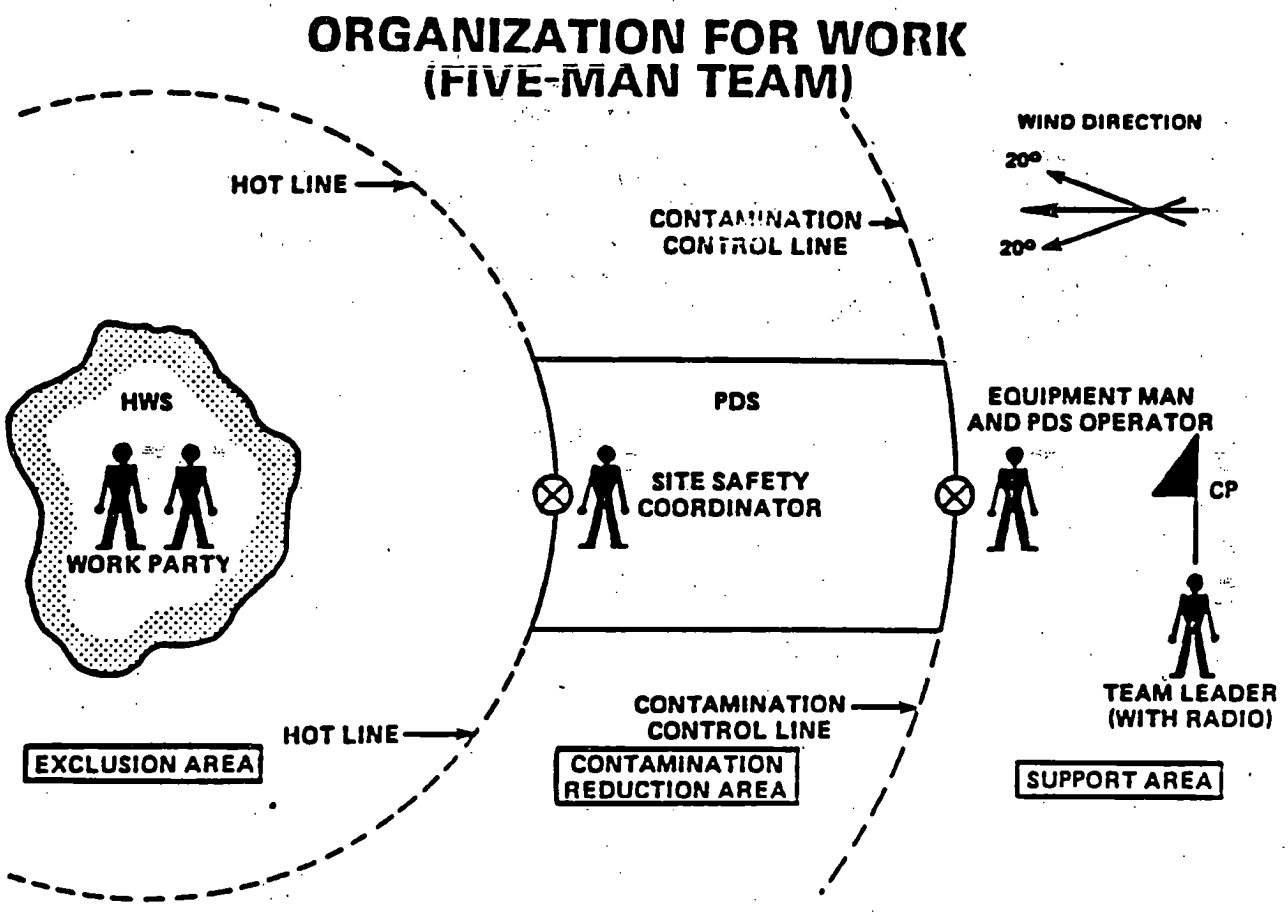

Figure 3-3 ORGANIZATION FOR WORK

recycled paper
ecology and environment

3.3.2 PDS Operator

One team member will be designated as the PDS operator. This team member processes work teams into the hazard site and decontaminates personnel returning from the hazard site. He or she also is responsible for equipment checkout and recharging of respirator tanks. In a five-person team, the safety officer must help the PDS operator during in-and-out processing of team members.

3.3.3 Safety Officer

The safety officer is positioned on the hot line, where he or she can observe the actions of work parties down range. Line of site between the safety officer and sampling team should be maintained at all times. The safety officer directs withdrawal of the work parties if, in his or her judgment, actions are being performed that may be unsafe. The safety officer is the primary advisor to the team leader on all matters relating to safety.

3.3.4 Work Party (Sampling Team)

The final element of this hypothetical team is the work party. The work conducted by the two-person team provides the reason for being onsite; this team performs the necessary tasks called for in the site investigation. It can be given the following designations:

- The initial entry party - if it is the first team on site. It serves as a reconnaissance team, gathering information about the site.
- The work party - if performing general work or making general observations.
- Sampling team - when sample collection is the sole purpose for being on site.

The work party will never consist of less than two individuals, but may be larger if required to accomplish the work directed.

3.4 AIR MONITORING AND CHARACTERIZATION EQUIPMENT

Specialized equipment is used to measure and characterize air contaminants on a hazardous waste site. This information determines the nature and condition of the wastes present, the locations of "hot spots," and the level of worker protection required. This equipment is also used to monitor the site for changes in air contaminant concentrations during investigator work and to screen samples.

Although the instruments are designed for field investigations, they are inherently sensitive to environmental conditions and have

defined limitations and interferences, which may cause elevated or suppressed readings. In some cases, a measurement from one instrument may substantiate measurements from another; but in all cases, the information obtained from all instruments should be used to determine the overall picture of the site.

Monitoring instruments should be operated only by trained and experienced personnel who have a proper understanding of the use, limitations, and implications of these instruments and the wastes present at the site. Considerations for developing air monitoring strategies at hazardous waste sites are shown in Figure 9. The following subsections describe monitoring equipment.

3.4.1 Explosimeter

- **Description and Use:** The explosimeter determines the level of flammable vapors or dusts present in an atmosphere as a percentage of the lower explosive limit (percent LEL) by measuring the change in electrical resistance in a Whetstone bridge circuit.

- **Operation:** (See Appendices B and C.)

- **Limitations:** The explosimeter cannot be used in atmospheres where the oxygen level is below 19.5 percent or above 25 percent. Silicanes, silicones, silicates, and leaded gasoline vapors can destroy the instrument's sensitivity. The explosimeter does not indicate if a given atmosphere is toxic. The instrument must be calibrated daily. It will respond with varying sensitivities to various compounds.

- **Action Levels:**

  - If less than 20 percent LEL, continue site inspection.

  - If between 20 and 50 percent LEL, continue site inspection with continuous and careful monitoring; identify source, if possible.

  - If greater than 50 percent LEL, evacuate site immediately, notify proper emergency agency.

3.4.2 Oxygen Detector

- **Description and Use:** The oxygen detector measures the atmospheric oxygen concentration directly by means of a galvanic cell.

- **Operation:** (See Appendix C.)

SITE CONDITIONS	METEOROLOGICAL FACTORS	INSTRUMENT FACTORS
• Disposal Method (surface impoundment, landfill, drums, landfarm, etc.)	• Wind Speed	• Sensitivity/Limits of Detection
• Topography	• Wind Direction	• Accuracy
• Surface Area Exposed	• Stability Class	• Precision
• Type of Remedial Activity	• Temperature	• Bias
• Level and Frequency of Site Activity	• Humidity	• Specificity/Interferences
• Baseline Pollutant Levels (downwind)	• Solar Loading	• Range
• Ambient Air Quality (upwind)	• Barometric Pressure	• Response Time
• Containment Integrity	• Changing Wind Direction and Speed	• Service Life
• Concentration of Contaminant (current)		• Weight
• Age of Site		• Mobility
• Predicted Emissions From Remedial Activity		• Power Requirements
• Agents (number, class, compatibility)		• Sorbent Media
• Physical/Chemical Properties of Agents		• Versatility
• Vehicular Traffic (location and volume)		• Support Equipment (calibration, recorders, sample injection, tools, etc.)
• On-Site Traffic and Equipment Emissions		• Flow Rate
• Inter-Site Emission Locations		• Sampling Time
		• Weather Resistance
		• Ruggedness/Durability

Figure 3-8 CONSIDERATION FOR AIR TOXICS MONITORING STRATEGIES

- **Limitations:** The sensing cell in the oxygen detector has a lifespan of approximately 1 year. Care must be taken to protect the sensor from immersion or damaging blows.

- **Action Levels:** If less than 19.5 percent: Complete inspection with SCBA; continuous monitoring; Explosimeter readings not valid in atmospheres less than 19.5 percent or greater than 25 percent.

3.4.3 Draeger Tubes

- **Description and Use:** The Draeger tubes and pump measure the concentrations of specific inorganic and organic vapors and gases by creating a discoloration proportional to the amount of material present.

- **Operation:** (See Appendix D.)

- **Limitations:** The pump must frequently be checked for leaks. Response time is relatively slow. Specific tubes must be used for each given compound and are subject to cross-sensitivity.

- **Action Levels:** Species dependent: Consult "Dangerous Properties of Industrial Materials" by N. Irving Sax.

3.4.4 Radiation Instruments

- **Description and Use:** The simplest to operate is the Radiation Alert Mini (See Appendix E). It detects ionizing radiation and provides visual or audible warnings when preset dose rates are exceeded.

  The radiation survey meter is a pulse count rate meter. With the pancake detector probe, it acts as a survey meter for alpha-beta-gamma radiation. The Rad-Tad is used to give an audible warning in areas containing dangerous radiation levels. The dosimeter gives an indication of the total amount of radiation encountered over a period of time.

- **Limitations:** The radiation survey meter must be frequently calibrated and checked only by persons who have been trained in the proper interpretation of its readings. The detector cannot be disconnected while the instrument is in operation.

- **Action Levels:** If greater than background readings occur, evacuate immediately and notify the proper agency. Consult with the E & E radiation group.

recycled paper
recycled paper
ecology and environment
00090.PM3

3.4.5 HNU Photoionizer

- **Description and Use:** The HNU photoionizer is used to determine the concentration of organic and inorganic vapors and gases with an ionization potential (IP) of less than 11.7 electron volts or 10.2 electron volts, depending on probe in use.

- **Operation:** (See Figure 10.)

- **Limitations:** The HNU photoionizer does not respond to compounds with ionization energies greater than the probe's potential, such as methane (CH_4), or hydrogen cyanide (HCN). The instrument's sensor cannot be immersed, and it functions poorly in cold or moist weather. The response will vary with different compounds.

- **Action Levels:** Calibration to zero on "standby." The following action levels are for "above background" concentrations.

  0 - 1 ppm: Level D protections generally sufficient
  1 - 5 ppm: Don air purifying respirator (APR)
  5 - 500 ppm: Don self contained breathing apparatus (SCBA)

3.4.6 Organic Vapor Analyzer (OVA) in the Survey Mode

- **Description and Use:** The OVA provides a continuous readout of the total concentration of organic vapors and gasses by using a flame ionization detector.

- **Operation:** (See Figure 10.)

- **Limitations:** The OVA needs to be warmed up prior to use, and loses sensitivity in humid or moist conditions. The OVA can be used only by specially trained operators. It does not respond to inorganic vapors (most importantly HCN) but it does respond to methane (CH_4).

- **Action Levels:** The following levels are action for "above background," non-methane concentrations.

  0 - 1 ppm: Level D protection generally sufficient
  1 - 5 ppm: Don APR
  5 - 500 ppm: Don SCBA

3.4.7 OVA in the Gas Chromatographic (GC) Mode

- **Description and Use:** In the GC Mode, the OVA is used to characterize and identify specific organic compounds on site. It can be operated in conjunction with gas-tight syringes, Mylar bags, and air sampling pumps. In this mode it is also used to

PRIMARY FIELD AIR QUALITY SURVEY INSTRUMENTS

I. EQUIPMENT USED TO LOCATE "HOTSPOTS"

- o Photoionization Detector (PID)
  - The photoionizer by HNU is used to determine the concentration of organic and inorganic vapors and gases with a ionization potential (IP) less than 11.7 electron volts (ev).
  - The photoionizer does not respond to methane (CH_4) or hydrogen cyanide (HCN). The instrument's sensor is water soluble and cannot be immersed.
- o Organic Vapor Analyzer (OVA)
  - The OVA provides a continuous readout of the total concentration of organic vapors and gases by the use of a flame ionization detector.
  - The OVA can be used only by specifically trained operators. It does not respond to inorganic vapors (most importantly, HCN), but it does respond to methane.

II. EQUIPMENT USED IN AMBIENT AIR CHARACTERIZATION AND SAMPLE SCREENING

- o OVA in Gas Chromatographic (GC) Mode
  - In the GC mode, the OVA can be used to characterize and identify specific organic compounds on site. It can be operated in conjunction with gas-tight syringes, Mylar bags, and sampling pumps. In this mode, it is also used to screen samples before submitting them to the laboratory for analysis.
  - In the GC mode, additional specialized training is needed by the operator, and field standards have to be produced.

Figure 3-10 PRIMARY FIELD AIR QUALITY SURVEY INSTRUMENTS

screen samples prior to submitting them to the laboratory for analysis.

- **Operation:** (See Figure 10.)

- **Limitations:** The OVA can be used only by personnel trained in gas chromatography.

3.4.8 Other Equipment

Other equipment which may be used to further evaluate personal protection requirements include:

- Air particle counter (Dust meter),
- pH meter,
- H_2S monitor (Hydrogen sulfide), and
- HCN monitor (Hydrogen Cyanide).

3.4.9 Initial Site Entry Action Levels

These action levels are specifically established in the SSP. Each E & E employee is responsible for knowing the initial site entry action levels and the appropriate actions to be taken while on a hazardous substance site. See Figure 11 for a summary of the action levels.

3.4.10 Action Level for Radiation

When there is a reading indicating the presence of any radiation above the background level, E & E employees are to leave the site and report their findings to the RSC. Figure 12 provides the Federal Standard for Radiation Workers. These standards are NOT to be exceeded at any time.

3.4.11 Instrument Training

Each E & E employee must be familiar with the equipment used for site characterization. The following training aids are attached:

- Appendix B: MSA Model 2A Explosimeter
- Appendix C: MSA Combustable Gas and Oxygen Alarm (Model 260)
- Appendix D: Draeger Tube Samplers
- Appendix E: Radiation Alert-Mini

3.5 INITIAL ENTRY

An initial entry is conducted to confirm whether the historical background review is correct or whether the site conditions have changed the extent of the hazards. If limited or no information is available, the entry team will determine conditions and hazards.

INITIAL SITE ENTRY ACTION LEVELS

- o EXPLOSIMETER
  - less than 20% LEL: Continue site inspection
  - between 20% and 50% LEL: Continue site inspection, Continuous/careful monitoring to identify the source, if possible
  - above 50% LEL: EVACUATE IMMEDIATELY; Notify proper emergency agency
- o OXYGEN METER
  - less then 19.5%: Continue inspection with SCBA; Monitoring continuously; Explosimeter readings not valid below 19.5% or above 25% oxygen
- o DRAEGER TUBES
  - Species dependent: Consult "Dangerous Properties of Industrial Materials," Sax
- o RADIATION SURVEY METER
  - Above background reading: EVACUATE IMMEDIATELY; Notify proper agency

Figure 3-11 INITIAL SITE ENTRY ACTION LEVELS

FEDERAL STANDARDS FOR RADIATION WORKERS

WHOLE BODY PERMISSIBLE EXPOSURE	TIME
1.25 rem	Per quarter
5.00 rem	Per year
5(N-18) N= age of person	Lifetime

Figure 3-12 FEDERAL STANDARDS FOR RADIATION WORKERS

The team is linked to the command post by radio communications and will carry all air and radiological monitoring equipment needed to characterize the hazards on site. The members should be constantly alert and watchful for unstable soil, unstable structures or containers, buried or partially buried drums or debris, waste pools or piles, enclosed spaces, protruding objects, or any other dangerous or hazardous conditions. Avoidance of travel over or through waste should be practiced. In no case (unless specified in the work plan and health and safety plan), shall any team member climb onto, or cross-over drums, tanks, waste containers, or confined spaces.

Detailed observations are to be recorded in the field logbook including observed hazards, identified container labels, container condition, instrument readings, and apparent spill or waste areas. A Polaroid camera is useful in documenting site conditions which can be displayed at the command post.

It is crucial that the monitoring instruments be watched closely. The team should proceed slowly and cautiously, as the instruments will indicate hazardous environments before the team members would inadvertently enter one. The team should also keep in mind the evacuation route from the site should an emergency occur.

A checklist for entry into a hazardous waste site is presented in Figure 13.

3.6 EGRESS

Egress from the hazardous site must be carried out as a planned action---not as a panic reaction to low air reserves or other expected or exceptional circumstance. For example, it is not correct egress procedure to wait for the warning bell to ring on the SCBA oxygen tank, before attempting to reach the hot line in time for fresh air supplies. Not only must egress be planned before to entry, but it must also be understood that no team member may egress alone, and that no team member may remain on-site alone. Operations are always carried out according to the buddy system. Figure 14 summarizes some factors to be considered while planning an egress from the hazardous area.

3.7 PDS PROCEDURES (DECONTAMINATION)

The procedures discussed in this section are established to ensure that contamination is not spread to equipment, other team members, unprotected personnel, or the surrounding countryside.

3.7.1 Location of the PDS

The PDS lies in the area referred to as the contamination reduction area and is designed to help ensure that all personnel returning from

CHECKLIST FOR ENTRY INTO HAZARDOUS SITE

- o ACTIONS IN SUPPORT AREA
  - WORK PARTY BRIEFING
  - EQUIPMENT CHECK
  - DONNING OF PROTECTIVE CLOTHING
  - CHECKOUT PROTECTIVE ENSEMBLE
  - COMMUNICATION CHECK
- o ACTIONS IN CONTAMINATION REDUCTION ARIA
  - FINAL COMMUNICATION EQUIPMENT CHECK
  - ENTER EXCLUSION ZONE VIA ACCESS CONTROL POINT
- o ENTRY TO SITE
  - SLOW AND DELIBERATE
  - FOLLOW PREARRANGED ROUTE
  - MAINTAIN BUDDY SYSTEM
  - MAINTAIN CONTACT WITH SAFETY OFFICER
  - MONITOR WIND DIRECTION
  - CONDUCT AMBIENT AIR MONITORING

Figure 3-13 CHECK LIST FOR ENTRY INTO A HAZARDOUS WASTE SITE

recycled paper

ecology and environment

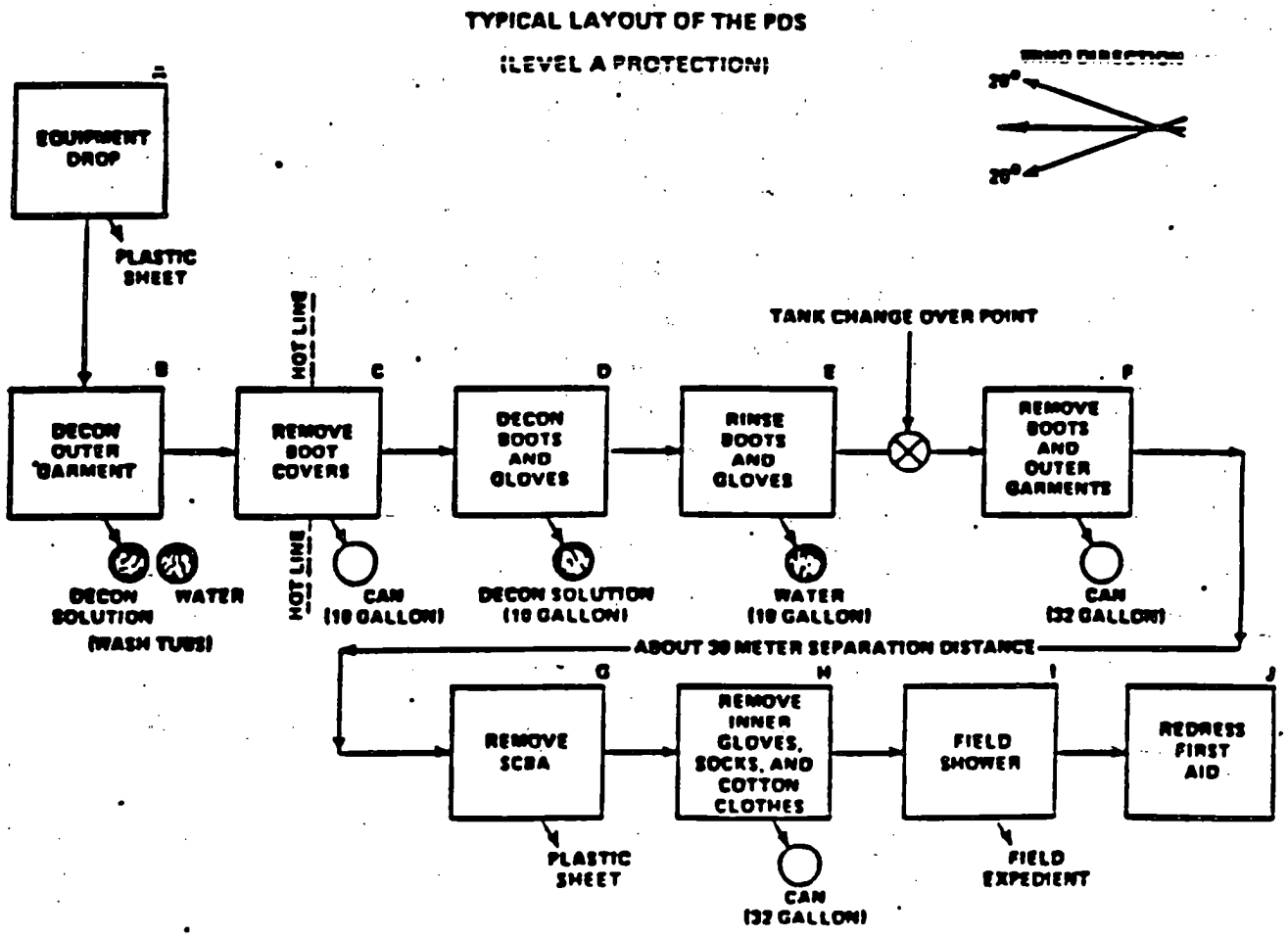

Figure 3-14 EGRESS FROM THE HAZAROUS WASTE SITE

recycled paper

the site have been completely decontaminated before re-entry into the clean support area. (See Figure 7.)

3.7.2 Level A PDS Organization

Figure 15 is a graphic representation of a typical Level A PDS. It is designed with safety in mind and has been in use by U.S. Army units as a means of controlling chemical or biological contamination from heavily contaminated areas. Although these procedures may appear to represent an "overkill," they are time tested and proven to be effective. Until experience proves other procedures to be better, these will remain the procedures adopted by E & E.

3.7.3 Level A PDS Step-by-Step Procedures

- **Step 1 - Equipment Drop.** A plastic groundcloth is adequate for the equipment drop.
- **Step 2 - Outer Garment Decontamination.** Accomplished by PDS operators using sponges, brushes, and fire cans. Ten percent solutions of NaOH, Na2CO3, or Ca(OCI)2 serve as good decontaminants.
- **Step 3 - Remove Boot Covers.** PDS operators will remove booties and place then in a 10-gallon can lined with plastic.
- **Step 4 - Decontaminate Boots and Gloves.** Accomplished by team members who step in washtub of decontaminant for boots and dip gloves in bucket of decontaminant. Use decontaminant as in Step 2.
- **Step 5 - Rinse Boots and Gloves.** Same procedures as Step 4, except that water is used for the rinse.
- **Step 6 - Remove Boots and Outer Garments.** Accomplished with help from PDS operator. Place boots and suits in a 32-gallon can.
- **Step 7 - Remove SCBA.** Accomplished with help of PDS operator. Place SCBA on plastic sheet.
- **Step 8 - Remove Inner Gloves, Socks, and Cotton Clothes.** Accomplished with help of PDS operator. Place cotton items in second 32-gallon can lined with plastic bag.
- **Step 9 - Field Shower.** Any type of field expedient facility allowing for a minimum of a full rinse.

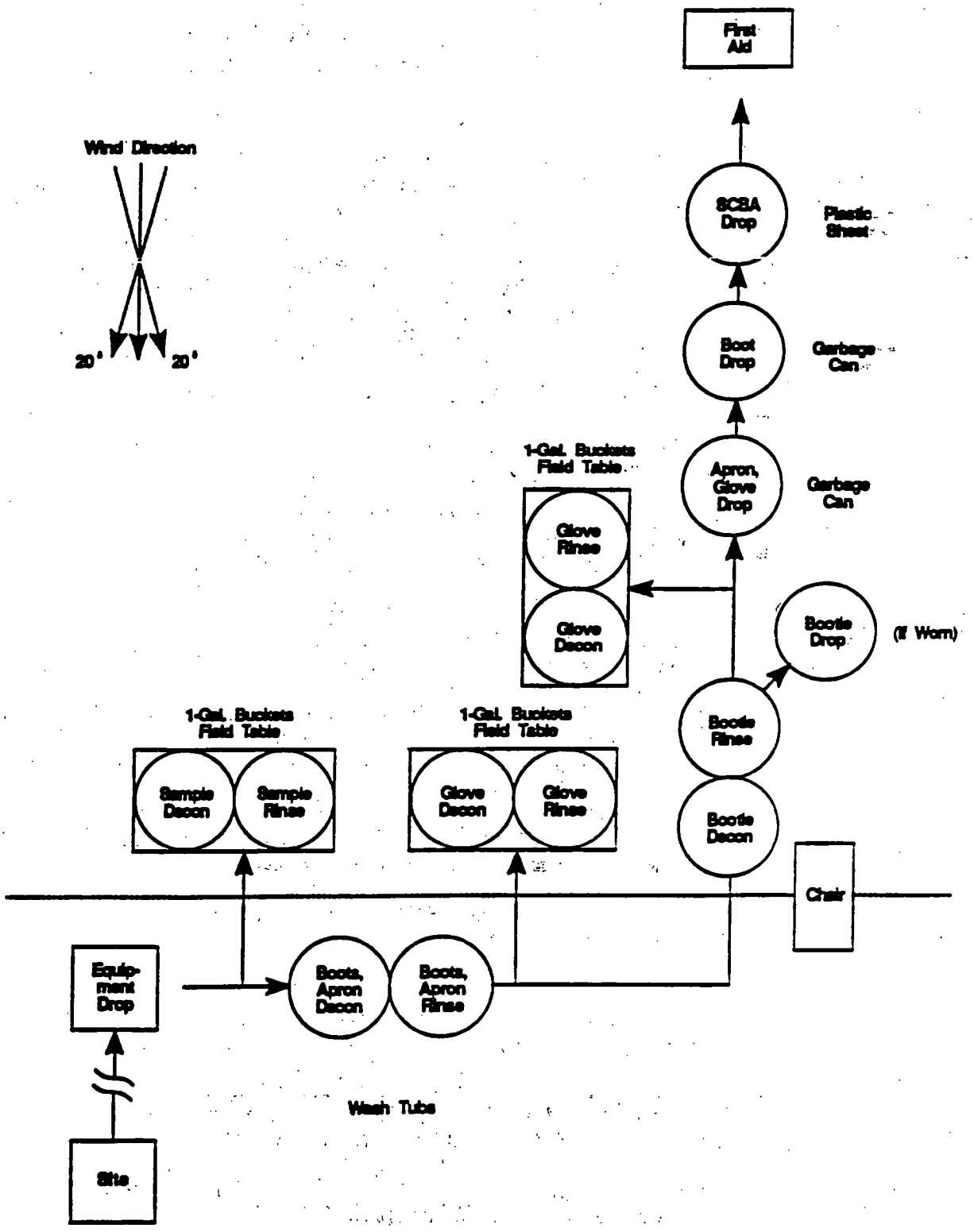

Figure 15. LEVEL A PDS

- **Step 10 - Redress and First Aid.** Safety officer checks blood pressure of team members. Eyes are checked for miosis (pin pointing of pupil).

3.7.4 Level B PDS Organization

Because Level A protective clothing will not be necessary for most sites, an abbreviated version of the full Level A PDS is needed. The Level B PDS shown in Figure 16 is recommended as the level of protection to be discussed. However, at less hazardous sites, the level of complexity for the PDS can be decreased.

3.8 DECONTAMINATION SOLUTIONS

Proper decontamination solutions must be used to ensure that all contamination has been removed from personnel and instruments, or other equipment that has been used on-site. Some suggested decontamination solutions are shown in Figure 17. The initial background study and site entry survey should provide information on proper solutions to protect against on-site chemicals. Specific decontamination chemicals (solvents) must be monitored to ensure proper respiratory protection for the PDS operator.

3.9 CLOSING THE PDS

The PDS may be closed only after all personnel and instruments have been decontaminated. Disposal of contaminated wastewater and expendable equipment must be in accordance with pre-approved procedures outlined in the site work plan and safety plan.

3.10 COMMUNICATIONS

3.10.1 General Radio Communications Guidance

On-site communications are important in any field investigation, both for general operations and emergency situations. Communications between a team and command post must be maintained through the use of portable two-way radios---either hand-held or head set types. Throat microphones are available for use with respiratory protective equipment. Hand signals should be established as a contingency if the radio system should fail.

3.10.2 Other Communications

An audible evacuation signal should also be established at the site. An air horn is often used for this purpose.

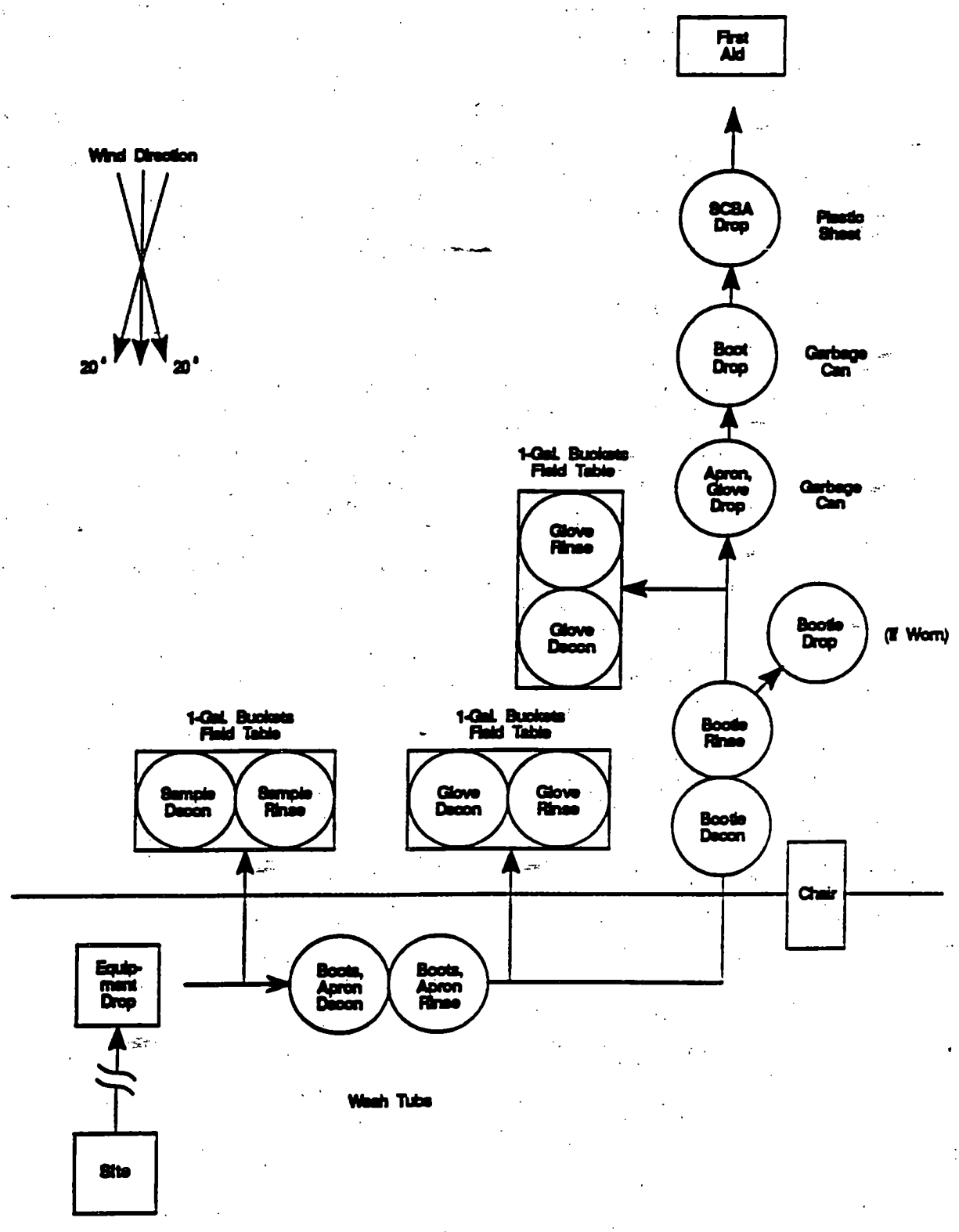

Figure 16. LEVEL B PDS

recycled paper
00080.PM3

Decon Solution	Mixing Solutions	Uses/Remarks
A. An aqueous solution containing a low-sudsing detergent.	Follow the mixing instructions written on the particular product label.	Generally has the widest range of use. Best choice on sites where contaminant is unknown or a wide range of contaminants exists.
B. An aqueous solution containing 5% sodium carbonate (Na_2CO_3) washing soda.	To ten gallons of water, add four pounds of sodium carbonate.	Decon solution of choice for base labile compounds such as the organophosphate pesticides. Effective in neutralizing inorganic acids. Since sodium carbonate is a water softening agent, this characteristic is an aid in physical removal of contaminants.
C. An aqueous solution containing 5% sodium bicarbonate ($NaHCO_3$) baking soda.	To ten gallons of water, add four pounds of sodium bicarbonate.	Sodium bicarbonate is amphoteric and can be used to neutralize either base or acid contaminants. Good decon for base labile compounds.
D. An aqueous solution containing 2% trisodium phosphate (Na_3PO_4) TSP.	To ten gallons of water, add approx. 2 pounds of trisodium phosphate.	See uses/remarks for Decon Solution B above
E. An aqueous solution containing 10% calcium hypochlorite ($CaCl_2O_2$) HTH.	To ten gallons of water, add 8 pounds of calcium hypochlorite	Cyanide salts
F. Ethylenediaminetetraacetic acid (EDTA, versene, sesquesterene)	Commercial product, follow product label.	EDTA is a chelating agent and is decon of choice for heavy metal contaminants.
G. An aqueous solution containing 3 to 5% citric, tartaric, oxalic acids or their respective sodium salts.	To ten gallons of water, add four pounds citric, tartaric or oxalic acid.	These compounds are chelating agents and are a decon of choice for heavy metal contaminants.

Figure 3-17 DECONTAMINATION SOLUTIONS

recycled paper
ecology and environment
00000.F

In addition, each team member should closely adhere to the following guidelines:

- Each member should have his or her name written on the hard hat or coverall for ease of identification when respiratory protective equipment is worn;
- Extraneous conversation is forbidden;
- Standard procedures and nomenclature will be used:
  - Each transmission is begun by identifying the party being reached, followed by identification of the initiator; and
  - This is followed by a pause for acknowledgment.
  - Each word must be pronounced clearly; language should be plain and direct; and
  - Each transmission should end with "over" or 10-4.

recycled paper
ecology and environment
00090.PM3

ATTACHMENT O
HAZARDOUS WASTE STORAGE

HAZARDOUS WASTE STORAGE

- All material must be stored in proper containers.
- Containers must be secured to prevent being upset or damaged.
- Incompatible materials should be segregated to prevent reactions from unanticipated mixing (etc., acids and cyanides).
- Containers must be properly labeled.
- Storage areas will be labeled and only authorized personnel will be allowed to enter the area.

ATTACHMENT P
WORKING AROUND HEAVY EQUIPMENT

WORKING AROUND HEAVY EQUIPMENT

- No unnecessary personnel should be in the area of heavy equipment operation.
- No personnel should be within 10 feet of the equipment when it is in operation.
- Anyone approaching a piece of heavy equipment must make visual contact with the operator.
- No one except the operator should ride on heavy equipment.
- Organize site, set up staging area, and designate routes for equipment.
- Standard hand signals should be utilized when communicating with the operator.

ATTACHMENT Q
GENERAL HEAVY EQUIPMENT OPERATIONS

GENERAL HEAVY EQUIPMENT OPERATIONS

- Organize site, set up staging area, and designate routes for equipment.
- All operators must be trained and experienced with the equipment they are operating.
- All equipment must be maintained in accordance with 29 CFR 1926 regulations.
- Equipment requiring back-up or swing alarms must have an alarm or a spotter.
- Equipment capacity must be designated and not exceeded.
- Operators must wear seat belts unless the equipment does not have roll-over protection.
- Standard hand signals should be utilized when communicating with the equipment operator.
- No unnecessary personnel should be on the equipment.

ATTACHMENT R
TRUCK LOADING

TRUCK LOADING

- If drivers must enter the exclusion zone, they must have the proper level of HAZWOPER training.

- Personnel covering the load must have the proper level of Personal Protective Equipment. The specific level will be contaminant specific. The Health and Safety Manager should be consulted if the level of PPE is not designated in the Health and Safety Plan.

- Proper equipment must be provided to personnel for getting in and out of the truckbed for lining and covering (ladder, etc.).

- Proper equipment and experienced operators must be utilized for loading trucks.

- The load must be centered and evenly distributed on the truck.

ATTACHMENT S
LIQUID SAMPLING

4.11.3.3 Liquid Waste Sampling

4.11.3.3.1 Sampling Equipment Available — The following Branch equipment is available for field use in collecting liquid waste samples from pits, ponds, and lagoons: sampling containers; sampling container affixed to a piece of conduit pipe; stainless steel scoop affixed to a piece of conduit pipe with tape or scoop bracket; stainless steel spoon attached to a conduit pipe; peristaltic pump and vacuum jug arrangement; Bacon-Bomb samplers; and profile tubes for phase determination and possible sampling.

4.11.3.3.2 Sampling Techniques — If the sampling technique utilized requires multiple aliquots, or if the final sample will consist of aliquots from several different locations in the pit, pond, or lagoon, all aliquots should be placed into a pyrex dish or large glass sample container, or other suitable compositing container, and mixed thoroughly before containerization.

Floating solids can be sampled directly or with a stainless steel scoop or spoon attached to a piece of conduit pipe.

The presence of individual liquid phases can be determined by using a profile tube. The top liquid phase can be sampled by direct dipping with the sample container; dipping with the sample container attached to a conduit pipe, either directly or by way of a fishing pole type arrangement, or dipping the sample with a stainless steel scoop attached directly to conduit pipe. Other liquid phases can be sampled with a peristaltic pump/vacuum jug arrangement with the end of the Teflon® tube intake attached to a conduit pipe and held at the desired depth or with Bacon-Bomb sampler opened at the desired depth. The Bacon-Bomb sampler can be operated directly from the banks of pits, ponds, and lagoons or from piers or operated by way of a fishing pole type arrangement using a piece of conduit pipe.

ATTACHMENT T

COMPATIBILITY TESTING AND COMPOSITING OF SAMPLES

FIELD CHEMISTRY LABORATORY PROTOCOL
AUTOMATIC DIECASTING SITE
ST. CLAIR SHORES, MI

The following is a set of procedures to be followed while working in the RES portable field chemistry laboratory. This lab will be employed as a site for field analyses of chemicals encountered within the Automatic Die casting site. This is a job-specific protocol, and pertains only to utilization of the RES field laboratory during the scope of this project.

GENERAL RULES

All operations within the lab area will be conducted under the following parameters:

- the laboratory will be considered a Level-D area (SSP, Automatic Diecasting, 4.4) with the following changes:
  - Hard-hat with face shield will be substituted with safety glasses
  - Paper tyvek and latex examination gloves will be worn during testing of samples.
- the fume hood will be in operation at any time when open samples are present
- the lab will have 1(one) working portable radio on at all times
- no eating, drinking, or smoking in the lab
- samples or other items from the exclusion zone will be decontaminated or contained before being brought into the lab
- the lab is to be kept neat and orderly at all times
- a fire extinguisher will be kept underneath the fume hood cabinet at all times

TESTING RULES

Chemical testing within the lab area will be performed under the following parameters:

- Addition of chemicals during testing that may result in splashing or other reaction will be performed behind the clear shield in the hood
- Test results will be recorded in the laboratory notebook
- Samples examined once awaiting further testing will be bagged and stored in the lab refrigerator
- Samples will recieve the following tests:
  - visual examination and description
  - pH measurement with pH indicator paper
- Samples may be subjected to any or all of the following tests as deemed necessary by the RES chemist or the OSC:
  - test for oxidizer
  - test for water reactivity/solubility
  - test for acid reactivity/solubility
  - test for cyanide
  - test for nickel

test for chromium
-test for hexane solubility
-test for alcohol solubility
-test for flashpoint
-test for chlorinated organic compound
-additional tests as required

WASTE DISPOSAL

Chemical sampling and testing is anticipated to generate waste, both solid and liquid. The following procedures will be utilized to ensure proper disposal of these wastes:

-two bags, one for acidic/neutral wastes and another for cyanide/caustic solids will be maintained.
-two accumulation jars, one for acidic/neutral liquids and one for cyanide/caustic liquids will be maintained
-The bags will be removed daily and disposed of with similarly contaminated protective clothing
-the jars will be emptied into vats or drums at the direction of the RES chemist to be disposed of with the compatible wastestream
-wastes will be disposed of from the lab on a daily basis
-samples no longer in need of examination will be disposed of in the container from which they were removed disposed of

Adherance to this protocol will ensure lab safety and accuracy for the duration of this project.

SIGNED, RES CHEMIST

SIGNED, RES RESPONSE MANAGER

SIGNED, EPA OSC 11-23-92

HAZ-CAT SAMPLING PLAN
AUTOMATIC DIECASTING SITE
ST. CLAIR SHORES, MI

The site to be sampled is an abandonned electroplating facility. On this site can be found accumulated drainage water, plating bath contents, metal sludge, and nearly 300 containers of various chemicals and wastes. Some chemical analyses on materials found within the facility are available, and information from the TAT team suggests that the waste seen here is consitant with that generated by a normal chrome-plating facility. RES has prepared an inventory of all containers of waste discovered as yet in the Automatic Diecasting site. The following is a protocol to address sampling for hazard categorization chemistry. Samples for analytical laboratory chemical analysis will be compiled from haz-cat samples as deemed necessary by the RES chemist. Samples that are to be sent to a laboratory will be treated as outlined in EPA Compendium of ERT Waste Sampling Procedures, S.O.P. 2004.

SAMPLING INTENT

The haz-cat chemical tests are to be performed for the following purposes:

- confirm validity of existing information
- assess compatability of various wastes for inclusion in larger waste streams for disposal
- provide information for the preparation of waste characterization profiles for disposal
- provide information to assist with identifing unknown wastes discovered on site

The results of the haz-cat tests will be documented within a laboratory note book and combined with the computerized inventory of wastes generated by RES.
Haz-Cat chemistry consists of qualitative analytical methods only. Wastes requiring quantitative analysis or firm, defendable, documentable results must be sampled for chemical laboratory analysis.

SAMPLING PRIORITY

The sampling will be done in an order that expedites the completion of other aspects of the project. The sampling areas in order of priority are as follows:

- liquids in large vats
- liquids in treatment system tank
- suspected nitric acid in degreaser tank
- liquids in smaller vats and rinse tanks
- liquid in fractionation tank from loading bay
- products identified as plating products
- liquids in drums identified as containing bath contents
- sludge from pit area

-sludge from ventilation systems
-sludge from drums in chemical storage area
-unknown drums in chemical storage area
-solids from vats
-drums moved to drum-staging area
unknown drums from other areas

This order should allow for minimal handling and maximum use of bulk transportation and disposal throughout the course of the project.

SAMPLING PROCEDURE

Sampling is to be performed in level B as specified in the Site Specific Safety Plan, Sec. 2.0, Sec. 4.2, Att. L, Att. I. Samplers will work in a team of two. The samplers will receive initial supervision and continuous direction by the RES chemist. The chemist will direct the samplers on missions to sample the wastes in the order that best reflects the job flow. Each mission will consist of 5-10 sampling events. Non uniform wastes will sampled in multiple locations designated on a site map. The sample team will be given a copy of the site map. The containers have been assigned numbers as specified in the RES container inventory.
The following is the procedure for hazcat sampling:
-locate container requested by chemist.
-begin sample information sheet by recording container number. Check to make sure that container, sample sheet, and sample jar have the same number
-remove lids, bung, or cover as needed. See SSP Att. H,I,T.
-examine waste to determine physical state
-if liquid, utilize glass rod with rubber squeeze bulb to sample the waste. Do not introduce waste into the bulb.
-place the end of the rod into the sample jar and squeeze the bulb until the glass rod is empty. Do not drip waste on the outside of the sample jar
-if solid, use sampling trowel to take small scoops from at least four locations in the container if unable to reach solids, consult chemist
-use trowel to place solid waste in the sample jar. Do not drop waste on the outside of the jar
-replace the lid of the sample jar and tighten it.
-ensure that the sample information sheet is filled out completely and accurately
-take the samples to the decontamination line and place it in the 1st sample decontamination bath.
-place the sample information sheet face down on the decontamination table

The decontamination attendant will move the sample jars through the next two baths and lightly dry them with a paper towel. The sample information sheets will be placed in a manilla envelope. The samples and the sheets will then be brought to the lab. The sample identification sheets will be retained as part of the

project documentation. The information from them will be incorporated in the inventory sheet.

SAMPLE QUALITY ASSURANCE

The samples and the sample information sheets will be checked by the RES chemist. Any samples deemed questionable will be repeated. The samples and the accompanying information sheets will be checked against the inventory as well as the store of current information in order to ensure accurate recording. The RES chemist will provide training and direct supervision during the first sampling mission. The samples will be periodically observed by the RES chemist and the RES foreman to ensure that the protocol is being adhered to.

This protocol will ensure safety and accuracy during sampling, and will direct the sampling effort to complete the project in the most expedient manner.

SIGNED-RES CHEMIST

RES Resp Mgr.

SIGNED EPA OSC

11-23-92

I have read and understood this protocol, as well as Attachments H, I, and T in the Site Safety Plan

SIGNED-RES SAMPLER

SIGNED RES SAMPLER

SIGNED RES SAMPLER

SIGNED-RES SAMPLER

HAZCAT

(HAZARDOUS WASTE SAMPLE CATEGORIZATION)

Introduction:

The following step by step instructions are field and laboratory categorizations to be used in determining parameters for analysis, sample consolidation, appropriate disposal methods, and the associated hazards of the materials which will be the basis of the site safety program. Also, the information gained by this procedure can aid in the waste disposal approval process by providing sufficient parameters to complete the "Waste Profile Sheets" required by most disposal facilities. Prior to the completion of actual laboratory analysis this procedure can establish wether or not the material actually exhibits the characteristics of a hazardous waste as specified by 40CFR parts 261.20 thru 261.23(D001, D002, D003).

The HAZCAT Kit:

The HAZCAT kit itself is packed into two metal containers and should consist of the following:

1. SETA Flash unit
2. Cyanide Test kit
3. Sulfide Test kit
4. Electronic Thermometer

HAZCAT kit contents(Continued):

5.Mercury Thermometer

6.Distilled Water, 500ml

7.Acetone, 500ml

8.Potassium Iodide-Starch Strips, 5 containers

9.pH Paper, 3 rolls

10.Copper Wire, 1 foot minimum

11.0.5N Hydrochloric Acid,500ml

12.Sample Cups, 100 each

13.Disposable Pipettes, 100 each

14.Disposable Test Tubes, 100 each

15.Color Wheel

16.Propane Torch Head

Due to shipping regulations, two items needed to perform the HAZCAT procedure cannot be transported by air, therefore, they are not included in the kit. These materials must be purchased once on site. These materials are:

1.Small Propane Tank(for the chlorinated hydrocarbon test)

2.Butane(for SETA Flash unit)

Also, it would be helpful to have the following items on hand when performing the HAZCAT procedure:

1.Paper Towels

2.Trash Bags

3.Clipboard

4.Matches

5.Thin Rubber Gloves

To replace or purchase any of the materials listed above, refer to the "Possible Vendor Listing" located in the appendix of this manual.

Preparation:

Before begining the HAZCAT procedure, a suitable location must be found. The ideal location is in a functional laboratory ventilation hood, however, a hood is usually not accessible in the field in which case the procedure should be performed in Level B protection. The chosen location should be isolated from flammable or unknown materials, wind, and rain. An electrical source will also have to be obtained in order to operate the SETA Flash unit.

After a suitable location has been chosen, set up the HAZCAT equipment in such a way that the procedure can be done in an assembly line manner. This can be done to personal preference although the individual tests should be completed in the order specified by the written procedure. In order to expedite the process, it is best to have one person recording data while the other performs the tests. Note, the surface being used should be protected from contamination by a layer of visqueen or trash bags and a layer of paper towels or sorbent pads.

Also, the SETA Flash unit should be filled with butane using the filling attachments located in the kit and preheated to 140 degrees F prior to begining the procedure.

HAZCAT Procedure for Liquid Materials:

(A) COLOR:

1) Note sample color.

a) Sample color should be noted as black, white, colorless, or one of the primary or secondary colors as seen on the color wheel provided in the kit.

b) Be sure to specify multiple colors or color layers.

(B) PHYSICAL NATURE:

1) Describe the physical appearance of the sample.

a) Is the sample clear or cloudy?

b) Is the sample transparent, translucent, or opaque?

(C) HOMOGENEITY:

1) Describe the number of layers or phases in the sample.

a) Is part of the sample solid and part liquid?

b) Is there more than one apparent layer or stratification in the sample?

(D) VISCOSITY:

1) Note the relative sample viscosity.

a) If the sample has approximately the same flow as water, record the sample as being "=" in this category.

b) If the sample appears to be more or less viscous than water, record either ">" or "<", respectively.

(E) REACTIVITY:

1) Determine the sample's potential to react with water.

   a) In a disposable test tube place approximately one inch of distilled water and the thermometer probe.

   b) Slowly add two or three drops of sample to the tube. Always point the tube away from you and others.

   c) If a temperature change of 5 degrees F or more occurs, note the sample as being reactive and procede to step (F).

   d) If no significant temperature change occurs, add one more drop of sample to the tube and cork it lightly.

   e) Shake the tube once gently. If the cork is ejected or moves, record the sample as being reactive(EPA/RCRA-D003).

   f) If niether of the above occurs, record the sample as being non-reactive.

   g) Save the tube and its contents for the next two procedures.

(F) WATER SOLUBILITY:

1) Determine the solubility of the sample in water.

   a) If the contents of the tube do not seperate into two or more distinct layers, record the sample as being water soluble having a specific gravity of one and procede to step (H).

(F) WATER SOLUBILITY (CON'T):

b) If two or more distinct layers do occur, consider the sample to be insolubile and procede to the next step.

(G) SPECIFIC GRAVITY:

1) Determine the specific gravity of the sample.

a) If the sample layer sits above the water layer in the tube, the specific gravity of the sample is less than 1.

b) If the sample layer sits below the water layer in the tube, the specific gravity of the sample is greater than 1.

(H) pH (ACIDIC or BASIC):

1) Determine the pH of the sample.

a) Place 5 or 6 drops of sample into a sample cup.

b) Using the pH paper provided, measure and record the pH of the sample. Wiping the excess sample from the pH paper with a clean paper towel will help reduce color interference.

c) If the pH value is less than 7, procede to step (I).

d) If the pH value is greater than 5, procede to step (J).

e) If the pH is less than or equal to 2 or greater than or equal to 12.5, the material is an EPA/RCRA hazardous waste(D002).

Sample #	Color	Physical Nature	Visc.	Specific Gravity	React.	Sol.	pH	Oxid.	CN^-	$S^=$	Flash Point	Chlorinated Hydrocarbons

recycled paper

ecology and environment

(I) OXIDIZERS:

1) Determine the sample's potential to oxidize other materials.

   a) Wet a potassium iodide-starch strip with 0.5N hydrochloric acid.

   b) Dip the strip into the sample.

   c) If the strip turns anywhere from light-brown to purple within the first two minutes, record the sample as being an oxidizer.

   d) Also, note any changes that occur to the strip within the next 5 minutes.

   e) A positive result for this test indicates that the material is a hazardous waste(EPA/RCRA-D001 and D003).

(J) CYANIDES:

1) Determine the presence of cyanide in the sample.

   a) If the sample is turbid, filter it into one of the square bottles located in the cyanide kit using the funnel and filter paper also located in the cyanide kit.

   b) If the sample is not turbid, pour it directly into one of the square sample bottles mentioned above.

   c) Add the contents of a "HexaVer" powder pillow to the sample using the clippers to open the pillow.

   d) Swirl the mixture in the bottle.

   e) Add the contents of a "CyaniVer 3" powder pillow and swirl as before. Allow the mixture to stand for one minute.

(J) CYANIDES (CON'T):

f) Add the contents of one "CyaniVer 4" powder pillow to the mixture and swirl. proceed immeadiately to the next step.

g) Add the contents of one "CyaniVer 5" powder pillow to the mixture and swirl. Allow the mixture to stand.

h) If cyanides are present, the mixture will turn pink and then blue within 5 minutes. Allow the mixture to stand for no more than 20 minutes before interpreting the result.

i) Discard the solution into the sample cup used before.

(K) SULFIDES:

1) Determine the presence of sulfides in the sample.

a) Fill one of the test bottles provided in the sulfides kit approximately 1/3 full of sample. then, dilute to the mark with water.

b) Add 1ml of "Sulfide 1 Reagent" to the bottle using the dropper provided in the reagent bottle and swirl to mix.

c) Add 1ml of the "Sulfide 2 Reagent" to the bottle and swirl to mix. Allow to stand for five minutes.

d) If sulfides are present, the solution will turn blue within 5 minutes.

(L) FLASH POINT:

1) Determine the flash point of the sample.

   a) The SETA Flash unit should be preheated to 140° F.

   b) Place two or three drops of sample into the cup of the SETA Flash unit, close the cup, and set the timer.

   c) When the timer bell rings, turn the butane valve on, light the heads, and the flame into the cup using the lever located on the right-hand side of the cup.

   d) If a flash or a "pop" occurs, the sample is considered to be ignitable(EPA/RCRA-D001). There may also be a persistent flame at the mouth of the cup. If the sample exhibits any of these characteristics, rerun the test at 100° F.

   e) In order to expedite the procedure, run all samples at 140° F first and then run all samples which previously exhibited ignitable characteristics at 100° F in order to determine wether or not the sample is flammable as determined by D.O.T. This way the temperature of the SETA Flash only has to be set twice.

(M) CHLORINATED HYDROCARBONS:

1) Determine the presence of chlorinated hydrocarbons in the sample.

   a) Turn on the valve of the propane torch and depress the ignition button.

   b) Heat the copper wire in the flame until the green emission turns to yellow.

(M) CHLORINATED HYDROCARBONS (CON'T):

c) Dip the wire into the sample and place it in the f

d) A green colored flame indicates the presence of chlorinated hydrocarbons.

e) Note, if the wire begins to dissolve or exhibit reactive characteristics when in contact with the sample, abandon this procedure.

HAZCAT Procedure for Solid Materials:

(A) Color:

1) Note sample color.

a) Sample color should be noted as black, white, colorless, or one of the primary or secondary colors as seen on the color wheel provided in the kit.

b) Be sure to specify multiple colors.

c) If the sample exhibits more than three distinct colors, record it as being "multi" colored.

(B) PHYSICAL NATURE:

1) Describe the physical appearance of the sample.

a) Is the material a solid mass, crystalline, powder, debris, sludge, or soil.

(C) HOMOGENEITY:

1) Describe the uniformity of the sample.

a) Is the sample like throughout?

b) Record any variations in the sample.

(D) REACTIVITY:

1) Determine the sample's potential to react with water.

a) In a disposable test tube place approximately one inch of distilled water and the thermometer probe.

(D) REACTIVITY (CON'T):

b) Slowly add a very small amount of sample to the tube. Always point the tube away from you and others.

c) If a temperature change of 5° F or more occurs, note the sample as being reactive and proceed to step (E).

d) If no significant temperature change occurs, add another small amount of the sample to the tube and cork it lightly.

e) Shake the tube once gently. If the cork is ejected or moves, record the sample as being reactive(EPA/RCRA-D003).

f) If neither of the above occurs, record the sample as being non-reactive.

g) If you have a solid that appears to be packed in a liquid, do not remove any material from the container and abandon the remainder of this procedure.

(E) WATER SOLUBILITY:

1) Determine the solubility of the sample in water.

a) If the majority of the sample dissolved when added to water, record the sample as being soluble.

b) If the sample remains intact when added to water, record the sample as being insoluble.

(F) SPECIFIC GRAVITY:

1) Determine the specific gravity of the sample.

   a) If the sample floats on water, it has a specific gravity less than 1.

   b) If the sample sinks when added to water, it has a specific gravity greater than 1.

   c) Note, if the sample is soluble in water, it may be difficult to determine its specific gravity.

(G) pH (ACIDIC or BASIC):

1) Determine the pH of the sample.

   a) If the sample is insoluble in water, abandon the remainder of the HAZCAT procedure except for the flash point test.

   b) If the sample is soluble in water, place approximately half an inch of distilled water in a sample cup and add about half as much sample to the cup(2:1 dilution). Using this solution, continue with the procedure as described for liquid materials begining with step (H) after performing step (H) of the HAZCAT procedure for solid materials.

(H) FLASH POINT FOR SOLIDS:

1) Determine the flash point of the sample.

   a) Follow the same procedure as for liquid samples except place a small amount of the solid material in the cup and continue with the directions for flash point of liquid samples.

Sampl	Color	Physical Nature	Visc.	Spec Gravity	React.	Sol.	pH	Oxid.	CN^-	$S^=$	Flash Point	Chlorinated Hydrocarbons

Sample #	Color	Physical Nature	Visc.	Specific Gravity	React.	Sol.	pH	Oxid.	CN^-	$S^=$	Flash Point	Chlorinated Hydrocarbons

recycled paper

ecology and environment

Sampl	Color	Physical Nature	Visc.	Spec Gravity	React.	Sol.	pH	Oxid.	CN^-	$S^=$	Flash Point	Chlorinated Hydrocarbons

ATTACHMENT U

FLAMMABLE/COMBUSTIBLE LIQUID TRANSFER

RIEDEL ENVIRONMENTAL TECHNOLOGIES
FLAMMABLE LIQUID TANK TRUCK
EMERGENCY ENTRY/PUMPING PROCEDURE
February 1990
(Rev.1)

This procedure will be followed by all RET personnel responding to tanker truck rollovers or other situations where flammable liquids are stored inside tanker trucks and cannot be removed by normal means. This procedure addresses only the fire and explosion hazards in specific types of vehicles.

The procedure listed in this document is consistent with a procedure (using a drill to gain tank entry) recommended and practiced by Shell Oil Company for flammable petroleum products and organic solvents. This procedure has been taught to numerous fire departments across the country. No known accidents have occurred with the application of this procedure. An additional safeguard (use of inertion gas) has been added to give an increased level of safety.

I. RET POLICY

1. All personnel must be completely familiar with this procedure prior to work beginning.

2. All personnel must have an understanding of flammability and the use of all equipment required by this procedure. This includes combustible gas/oxygen meters, air drills, bonding and grounding equipment, etc.

3. No deviations from this procedure will be allowed without approval from the Regional Health/Safety Manager, or the Corporate Director Health and Safety, prior to work beginning.

II. POTENTIAL HAZARDS/WARNINGS

1. This procedure is only safe for flammable petroleum products transported in aluminum tanks.

2. Under no circumstances will this method be utilized for non aluminum tanks containing known (or suspected) flammable products.

3. A complete inspection for leaks will always be made prior to off loading. A thorough survey will be made for flammable vapors at this time.

4. Off loading of flammable liquids will present potential for flammable vapor buildup in the vicinity of the vacuum source. Steps will be taken to duct these vapors to a safe location.

5. Tanks containing gasoline will have an atmosphere that is typically UEL (too rich to burn). Tanks that contain diesel (because of the fuel's low vapor pressure) are usually below the LEL. Flammable atmosphere conditions will vary for other flammable liquids. However, these conditions may change rapidly due to ambient temperatures.

6. Deviation in any way from this procedure can result in extreme personal hazard with possibility of serious injury or death to any personnel in the immediate area.

7. Do not proceed if there are any questions or circumstances which are not covered in this procedure.

recycled paper ecology and environment

III. DEFINITIONS

1. Atmosphere

   Generic term for gases, vapors, and or mists occupying the space above any liquids or solids inside a tank.

2. Atmosphere Testing/Air Monitoring

   The testing for flammable vapors and oxygen content using a combination combustible gas/oxygen indicator (CGI).

3. Cold Cutting

   A method of opening an access hole into a tank without the use of a flame source. This will be performed with a air driven drill equipped with a carbide tipped hole saw.

4. Inerting

   Replacing the oxygen inside a tank with a gas (nitrogen in this case) that will not support combustion.

5. Flammability Limits

   The range between the lower explosive limit (LEL) and the upper explosive limit (UEL) where fire or explosion can occur if a source of ignition is presented.

6. Flammable Liquid

   A liquid with a flash point below 100 degrees F. These include materials such as gasoline, xylene, acetone, methyl alcohol, etc.

7. Combustible Liquid

   Liquid with a flash point above 100 and below 200 degrees F. These include diesel fuel, petroleum distillates, some fuel oils, etc.

IV. REQUIRED EQUIPMENT

1. Tank Roll Over Kit (inventory attached).
2. 30 minute compressed air cylinder with regulator.
3. 30 minute compressed nitrogen cylinder with regulator.
4. Clear plastic inerting enclosure.
5. Plumber's putty.
6. Combustible gas/oxygen meter with calibration gas.
7. Bonding wire with strong clips.
8. Volt ohm meter (VOM).

recycled paper

ecology and environment

V. INSPECTION/TANK SURVEY PROCEDURES

1. CGI's must be properly calibrated prior to use.

2. Insure that no known ignition sources are brought near the tanker. If light is needed, use intrinsically safe flashlights. Respond from the upwind side.

3. Thoroughly inspect the entire vehicle looking for liquid leaks. Utilize the CGI (sampling both high and low) to evaluate for flammable vapors.

4. Determine if existing pipe work or hatches can be utilized to off load product.

VI. DRILLING OPERATIONS

1. Use only air driven drill supplied in the Tank Car Kit.

2. Drilling will be performed from a horizonal surface to allow for placement of the inerting enclosure filled with cooling water.

3. Place plumbers tape along the bottom edge of the enclosure (open side to the tank) and press down onto a flat surface. Fill the area with water to depth of 1 inch.

4. Attach the nitrogen regulator to the nitrogen cylinder (marked nitrogen only). Attach the delivery line to the inerting enclosure.

5. Attach the compressed air regulator to the air cylinder. Route the compressed air line to the drill. Set regulator at 90 psi.

6. When ready to drill, place drill inside hood and start nitrogen flow. Set nitrogen regulator at 2.5 psi. Let flow for at least two minutes to purge all oxygen from inside the enclosure. Test atmosphere with oxygen meter. Oxygen concentration should read less than 2%.

7. When oxygen is less than 2%, begin to drill. Drill slowly keeping drill RPM's low. The desire is to not generate heat during drilling. Continue drilling until a hole has been made.

8. Secure enclosure and other materials.

9. Note that many tanks are separated into three or more compartments. Follow the above procedure for entry into each.

10. Pumping can now begin.

VII. PUMPING PROCEDURES

1. Secure a bonding wire to a secure point on the tanker chassis. Thoroughly scrape the surface to remove oxides, paint, grease, etc., to ensure good electrical contact.

2. Run the bond wire to the vacuum source. Attach to a point that will ensure good electrical contact.

recycled paper

ecology and environment

2.1.8 Hazards and SOPs Associated with Flammable/Combustible Liquid Transfer:

Hazards

1. Direct skin contact, inhalation, ingestion of contaminants.
2. Potential for fire or explosion during transfer.
3. Potential for spills during transfer.
4. Potential for chemical reaction during transfer.
5. Slip, trip, and fall around transfer hoses and equipment.

SOPS

1. Use of chemical resistant coveralls such as Saranex or butyl rubber when working with flammable/combustible liquids or when in the vicinity of open liquids.
2. Use of Level B respiratory protection when opening tanks, when monitoring intake vacuum hoses at the tank, when monitoring vacuum hoses at the discharge point, when ambient organic concentrations exceed 5 ppm or while engaged in other high hazard/contact activities.
3. Level C may be sufficient for non-intrusive perimeter activities if ambient concentrations are less that 5 ppm.
4. Keep fire extinguisher in readily accessible locations.
5. Ground or bond the tank and tanker truck prior to beginning transfer operations.
6. Clear the area of all open flames or other ignition sources, and all flammable and combustible materials.
7. Use spark-proof tools and equipment
8. Keep absorbants and spill containment equipment nearby in the event of a spill or leak.
9. Conduct air monitoring for organics, flammable/explosive vapors and oxygen as appropriate. Air monitoring equipment can be left in the work area unattended an programmed to sound an alarm if dangerous levels are encountered.
10. Have an emergency escape route planned and a contingency plan in case of an accident.
11. Be sure that all tanks are characterized and adequately and appropriately marked to avoid bulking of incompatible tanks.
12. Conduct the transfer with extreme caution, remembering that fittings striking surfaces may cause sparks.

recycled paper ecology and environment

ATTACHMENT V
COLD STRESS

COLD STRESS

HYPOTHERMIA

General Cold Stress - Cooling of body core temperature. Hypothermia results when the body loses heat faster than it can produce it. As a result, the body will try to conserve heat for vital organs.

Weather Conditions: Cool, damp, windy. Ambient temperatures do not have to be freezing - they can be as high as 50°F.

Symptoms: Uncontrolled shivering; decrease in heart rate, pulse, and breathing rate; pain in extremites; incoherence; drowziness; eventually death.

FIRST AID

Remove from cold and get to a warm place.
Remove wet clothes and cover with dry clothing or blankets.
Warm body **SLOWLY** to avoid shock.
Give nothing by mouth unless victim is fully conscious, then give warm broth or water - **no alocohol or caffiene.**

FROSTBITE

Localized Cold Stress - Freezing of bodily fluids. Does not necessarily occur in conjunction with hypothermia.

Weather Condition - Freezing Temperatures. **Be aware of the wind chill index** (See Table 1 on Page 3). Face, ear, fingers, and toes are most vulnerable.

Symptoms: Uncomfortably cold, numbness, stinging, tingling, cramping, skin discoloration (pale, glossy skin). Victim is often unaware of condition during the later stages

FIRST AID

Remove from cold and get to a warm place.
Re-warm frozen part **QUICKLY** by immersing in **warm** water, if water is not avialable, wrap affected areas gently with a sheet or warm blanket.
DO NOT RUB OR MASSAGE AFFECTED AREAS!
Swelling occurs rapidly once the affected part is thawed, so discontinue warming when the affected part becomes flushed.
If fingers and toes are involved, place sterile, dry gauze between them to keep them separated.
Seek medical attention immediately.

PRECAUTIONS TO TAKE TO AVOID COLD STRESS

1. Check the weather forecast for the day and dress appropriately.

2. Try to get the appropriate rest the night before fieldwork is to be performed. Inappropriate rest or illness can make you more susceptible to cold stress.

3. Increase fluids and caloric intake; refrain from smoking, and drinking beverages containing alcohol or caffiene.

4. Establish a work/rest schedule

5. Stop the loss of heat by insulating the body.

6. Most heat loss occurs through the head and neck. Keep these areas covered.

7. Keep in mind that wet clothing can lose the ability to retain heat.

8. Water conducts heat from the body 25 - 50 times faster than air.

9. The hands and feet are most affected by the cold due to their frequent contact with cold surfaces, including the ground, and because of their distance from the core of their body.

10. Minimize standing time outdoors if possible. When it does occur, try to keep moving, especially fingers and toes.

11. The most important component of a insulator is its ability to trap spaces of non-moving air.

12. Wear layers of loose, thermal type cotton or woolen underclothing. Outer garments should be tightly woven and wind and water resistant.

13. You want moisture to be drawn away from your body. Wool is optimal for cold weather because the wool absorbs perspiration and is an excellent insulator.

14. Other good insulators besides wool are cotton, down, and polypropylene. Denim is not a good insulator.

WINDCHILL INDEX

The windchill factor is the cooling effect of any combination of temperature and wind velocity or air movement. Table 1 below illustrates how wind speed affects the temperature as we would feel it on our exposed skin.

Table 1

Cooling Power of Wind on Exposed Flesh Expressed as Equivalent Temp

Wind Speed (mph)	Actual Temperature Reading (°F) 50	40	30	20	10	0	-10	-20	-30
Calm	50	40	30	20	10	0	-10	-20	**-30**
5	48	37	27	16	6	-5	-15	**-26**	**-36**
10	40	28	16	4	-9	-21	**-33**	**-46**	**-58**
15	36	22	9	-5	-18	**-36**	**-45**	**-58**	**-72**
20	32	18	4	-10	**-25**	**-39**	**-53**	**-67**	**-82**
25	30	16	0	-15	**-29**	**-44**	**-59**	**-74**	**-88**
30	28	13	-2	-18	**-33**	**-48**	**-63**	**-79**	**-94**
35	27	11	-4	-20	**-35**	**-51**	**-67**	**-82**	**-98**
40*	26	10	-6	-21	**-37**	**-53**	**-69**	**-85**	**-100**

*Over 40°F little added effect

Danger of freezing of exposed flesh

ATTACHMENT Z
SITE SAFETY PLAN
ACKNOWLEDGMENT FORM

SITE SAFETY PLAN ACKNOWLEDGMENT FORM

I have been informed and understand and will abide by the procedures set forth in the Safety and Health Plan and Amendments for the MCC Construction site.

Printed Name	Signature	Representing	Date
Mark Pawquette	Mark Pawquette	RES	1-4-95
BRAD STUMPS	Brad Stumps	USEPA	1-4-95
Karen Rydzewski	Karen Rydzewski	E+E/TAT	1-4-95
JOE PAYTOSH	Joe Paytosh	RES	1-4-95
Peter Kober	[illegible]	RES	1-4-95
TED PIETRON	Ted Pietron	RES	1-4-95
Mark Dougherty	Mark Dougherty	RES	1-4-95
Donovan Robin	Donna Robin	E&E/TAT	1-4-95
Freddie Stanley	Freddie Stanley	RES	1-7-95
Thomas Harper	Thomas Harper	RES	2-7-95