WORK PLAN – REVISION 0
MIDWEST GENERATION - CRAWFORD STATION SITE AND MIDWEST GENERATION - FISK STATION SITE
CHICAGO, COOK COUNTY, ILLINOIS

Prepared For

UNITED STATES ENVIRONMENTAL PROTECTION AGENCY
Emergency Response Branch
Region V
77 West Jackson Boulevard
Chicago, IL 60604-3507

Prepared By

WESTON SOLUTIONS, INC.
750 East Bunker Court, Suite 500
Vernon Hills, IL 60061

Date Prepared:	November 20, 2012
Technical Direction Document No.:	S05-0001-1210-016 S05-0001-1210-018
Document Control No.:	2016-2A-BBUP
Contract No.:	EP-S5-06-04
WESTON START Project Manager:	Ben Maradkel
Telephone No.:	(847) 918-4084
U.S. EPA On-Scene Coordinator:	Paul Ruesch

WORK PLAN – REVISION 0
MIDWEST GENERATION - CRAWFORD STATION SITE AND
MIDWEST GENERATION - FISK STATION SITE
CHICAGO, COOK COUNTY, ILLINOIS

Prepared for:

UNITED STATES ENVIRONMENTAL PROTECTION AGENCY
Emergency Response Branch
Region V
77 West Jackson Boulevard
Chicago, IL 60604-3507

Prepared by:

WESTON SOLUTIONS, INC.
750 East Bunker Court, Suite 500
Vernon Hills, IL 60061

November 20, 2012

Prepared by: _____ Date: November 20, 2012
Trenna Seilheimer and Shauna Ross
WESTON START Members

Reviewed by: _____ Date: November 20, 2012
Ben Maradkel
WESTON START Project Manager

Approved by: _____ Date: _____
Paul Ruesch
U.S. EPA On-Scene Coordinator

TABLE OF CONTENTS

1. INTRODUCTION 1
1.1 PROJECT TEAM 1
1.2 PROBLEM DEFINITION 2
1.3 WORK PLAN ORGANIZATION 2
2. SITE BACKGROUND AND HISTORY 2
2.1 SITE DESCRIPTION 2
2.1.1 Crawford Station Site 3
2.1.2 Fisk Station Site 3
2.2 SITE HISTORY 3
2.2.1 Crawford Station Site 4
2.2.2 Fisk Station Site 5
3. PROJECT DESCRIPTION AND SCHEDULE 6
4. PROJECT OBJECTIVES 6
5. WORK PLAN ACTIVITIES 7
5.1 METEOROLOGICAL MONITORING 7
5.2 GAMMA RADIATION SCREENING 8
5.3 PERIMETER PARTICULATE AIR MONITORING 9
6. DATA MANAGEMENT AND ANALYSIS 10
6.1 GAMMA RADIATION SCREENING 10
6.1.1 Survey Data (Spatial data) 11
6.1.2 Non-Spatial Data 11
6.1.3 Flex Viewer Site 11
6.2 PERIMETER PARTICULATE AIR MONITORING 13
6.2.1 Survey Data (Spatial data) 13
6.2.2 Non-Spatial Data 13

This document was prepared by Weston Solutions, Inc., expressly for U.S. EPA. It shall not be released or disclosed in whole or in part without the express written permission of U.S. EPA.

LIST OF FIGURES

Figure 1a Site Location Map, Midwest Generation – Crawford Station

Figure 1b Site Location Map, Midwest Generation – Fisk Station

Figure 2a Site Features Map, Midwest Generation – Crawford Station

Figure 2b Site Features Map, Midwest Generation – Fisk Station

Figure 3a Air Monitoring Location / Gamma Radiation Screening Area Map, Midwest Generation – Crawford Station

Figure 3b Air Monitoring Location / Gamma Radiation Screening Area Map, Midwest Generation – Fisk Station

LIST OF APPENDICES

Appendix A EOG – RainWise-MKIII Weather Station

Appendix B EOG – Victoreen 451P Pressurized Ion Chamber

Appendix C EOG – DR4

This document was prepared by Weston Solutions, Inc., expressly for U.S. EPA. It shall not be released or disclosed in whole or in part without the express written permission of U.S. EPA.

LIST OF ABBREVIATIONS AND ACRONYMS

°F	Degree Fahrenheit
ComEd	Commonwealth Edison Company
DR4	DataRAM 4
EOG	Equipment operating guide
ESA	Environmental Site Assessment
FAST	Field Analysis & Sampling Tool
GIS	Geographic information system
GPS	Global positioning system
KPRG	KPRG and Associates, Inc.
LVEJO	Little Village Environmental Justice Organization
mg/m^3	Milligram per cubic meter
mph	Miles per hour
MWRDGC	Metropolitan Water Reclamation District of Greater Chicago
NPDES	National Pollutant Discharge Elimination System
OSC	On-Scene Coordinator
PERRO	Pilsen Environmental Rights and Reform Organization
QA	Quality Assurance
REDS	Region 5 Environmental Data Server
START	Superfund Technical Assessment and Response Team
UST	Underground storage tank
U.S. EPA	U.S. Environmental Protection Agency
VIPER	VIPER Survey Controller
WESTON	Weston Solutions, Inc.

This document was prepared by Weston Solutions, Inc., expressly for U.S. EPA. It shall not be released or disclosed in whole or in part without the express written permission of U.S. EPA.

1. INTRODUCTION

Under the Superfund Technical Assessment and Response Team (START) contract, the U.S. Environmental Protection Agency (U.S. EPA) has tasked Weston Solutions, Inc. (WESTON®), to perform off-site gamma radiation screening and perimeter particulate air monitoring activities at the Midwest Generation - Crawford Station and Midwest Generation - Fisk Station Sites in Chicago, Cook County, Illinois (the Sites). This Work Plan describes the design, setup, operations, and procedures that will be used to conduct the off-site gamma radiation screening and off-site perimeter air monitoring activities at the Sites. The following sections discuss the project team, problem definition, and Work Plan organization.

1.1 PROJECT TEAM

The table below lists the personnel who will be involved in planning and technical activities performed under this Work Plan.

Name	Title	Organization	Telephone No.	e-Mail Address
Paul Ruesch	OSC	U.S. EPA	(312) 886-7898	ruesch.paul@epa.gov
Jim Mitchell	OSC	U.S. EPA	(312) 353-9537	mitchell.james@epa.gov
Gene Jablonowski	Health Physicist	U.S. EPA	(312) 886- 4591	jablonowski.eugene@epa.gov
Ben Maradkel	Project Manager	START	(847) 918-4084	ben.maradkel@westonsolutions.com
Shauna Ross	Site Lead	START	(312) 424-3318	shauna.ross@westonsolutions.com
Tonya Balla	Health and Safety Officer	START	(847) 528-2623	tonya.balla@westonsolutions.com
Lisa Graczyk	QA Reviewer	START	(312) 305-6745	lgraczyk@css-dynamac.com

Notes:
OSC On-Scene Coordinator
QA Quality Assurance

In addition, U.S. EPA is coordinating closely with representatives from the City of Chicago Department of Public Health, Illinois Environmental Protection Agency, Illinois Department of Public Health, and the Agency for Toxic Substances and Disease Registry in the development and implementation of this Work Plan.

This document was prepared by Weston Solutions, Inc., expressly for U.S. EPA. It shall not be released or disclosed in whole or in part without the express written permission of U.S. EPA.

1.2 PROBLEM DEFINITION

On September 18, 2012, Chicago Legal Clinic, Inc., legal counsel on behalf of the Pilsen Environmental Rights and Reform Organization (PERRO) and the Little Village Environmental Justice Organization (LVEJO), contacted the U.S. EPA regarding concerns about environmental impacts from the Sites. In response to correspondence with PERRO and LVEJO, the U.S. EPA developed this Work Plan to conduct off-site gamma radiation screening and perimeter particulate air monitoring activities to address public ambient air concerns associated with the Sites.

1.3 WORK PLAN ORGANIZATION

This Work Plan is organized as follows:

- Section 1 – Introduction
- Section 2 – Site Background and History
- Section 3 – Project Description and Schedule
- Section 4 – Project Objectives
- Section 5 – Work Plan Activities
- Section 6 - Data Management and Analysis

Figures are presented after Section 6, followed by the report appendices.

2. SITE BACKGROUND AND HISTORY

This section discusses the Site description and history.

2.1 SITE DESCRIPTION

The Crawford Station and Fisk Station Sites are described below.

This document was prepared by Weston Solutions, Inc., expressly for U.S. EPA. It shall not be released or disclosed in whole or in part without the express written permission of U.S. EPA.

2.1.1 Crawford Station Site

The Site is located at 3501 South Pulaski Road in Chicago, Cook County, Illinois (**Figure 1a**). The Site's coordinates are 41°49'42.78" North latitude and 87°43'19.29" West longitude. The Site is bordered to the north by railroad tracks, with West 33rd Street beyond; to the east by South Hamlin Avenue, with commercial and industrial properties beyond; to the south by the Chicago Sanitary and Ship Canal; and to the west by South Pulaski Road, with commercial and industrial properties beyond (**Figure 2a**).

The Site occupies 72 acres and is developed with buildings and infrastructure associated with Midwest Generation's Crawford Station coal-fired electric power generating plant. Residential properties are located approximately 105 feet north of the Site and 2,000 feet southeast of the Site.

2.1.2 Fisk Station Site

The Site is located at 1111 West Cermak Road in Chicago, Cook County, Illinois (**Figure 1b**). The Site's coordinates are 41°51'08.62" North latitude and 87°39'08.95" West longitude. The Site is bordered to the north by West Cermak Road, with commercial properties beyond; to the east by Morgan Street, with commercial properties beyond; to the south by the South Branch of the Chicago River; and to the west by commercial properties, with South Throop Street beyond (**Figure 2b**).

The Site occupies 60 acres and is developed with buildings and infrastructure associated with Midwest Generation's Fisk Station coal-fired electric power generating plant. Residential properties are located approximately 700 feet south of the Site and 800 feet north of the Site.

2.2 SITE HISTORY

The Sites are owned by Midwest Generation, a subsidiary of California-based Edison International, a corporation that produces electric power. In early 2012, Midwest Generation announced a deal with city, community, and environmental organizations to close the two plants. Midwest Generation purchased both Sites from ComEd in December 1999. Commonwealth

This document was prepared by Weston Solutions, Inc., expressly for U.S. EPA. It shall not be released or disclosed in whole or in part without the express written permission of U.S. EPA.

Edison Company (ComEd) retains ownership of both Sites and leases access to portions within and next to the Sites as part of its electrical transmission and distribution system.

Site-specific operating information for each Site is presented below.

2.2.1 Crawford Station Site

The Site operated as a coal-fired power plant since 1925. Electrical power was transmitted from the Site to the area grid through overhead transmission power lines. The Site's main generating building originally was built in the early 1920s, with the first unit becoming operational in 1924. Eight units previously operated at the Site. Units 1 through 4 were dismantled and removed in the 1960s. Units 5 and 6 were retired in the early 1970s, and portions of the units remain in the eastern half of the main generating building. Units 7 and 8 were retired in August 2012.

The Site also contained 12 jet-engine peakers primarily fueled by fuel oil and natural gas, which were run to generate additional power during peak demand for electricity. The peakers were retired, dismantled, and removed from the Site in 2006. A 750,000-gallon fuel oil storage tank previously used for the peakers also was dismantled and removed from the Site in 2006. The tank had not been used for some time because the peakers more recently had been primarily fueled by natural gas. The Site also contained several other aboveground fuel and material storage tanks with secondary containment as well as a single, permitted, approximately 4,000-gallon diesel fuel underground storage tank (UST) and three oil/water separators.

In 2011, KPRG and Associates, Inc. (KPRG), conducted a Phase I Environmental Site Assessment (ESA) at the Site. According to the ESA Report (dated May 4, 2011), the Midwest Generation Will County Station delivered low-sulfur coal from Wyoming to the Site by barge along the Chicago Sanitary and Ship Canal. A conveyor system then transferred the coal either to a pile (capacity of 1.5 million tons) on the northeast side of the Site or to the crusher house and then into the station. In recent years, the size of the coal pile purposefully was reduced by up to 50 percent through a reduction in inventory from 60 days to 30 days. Storm water runoff from the coal pile was contained in a coal pile settling pond (also identified as Basin 3) located west of the coal pile and northeast of the main generating building. Site runoff was collected and

This document was prepared by Weston Solutions, Inc., expressly for U.S. EPA. It shall not be released or disclosed in whole or in part without the express written permission of U.S. EPA.

directed to a number of on-site basins. Many of the basins were lined with asphalt, but at least one (Basin 3) remained unlined. Sanitary wastewater generated at the Site was discharged to the Metropolitan Water Reclamation District of Greater Chicago (MWRDGC) for treatment. A National Pollutant Discharge Elimination System (NPDES) permit governed the process wastewater treatment system and discharges of condenser cooling water, house service water, demineralizer regenerant wastes, boiler blow-down and drain water, intake screen backwash, and storm water runoff from the various pits.

2.2.2 Fisk Station Site

The Site operated as a coal-fired power plant since 1903. Electrical power was transmitted from the Site to the area grid through overhead transmission power lines. The Site's main generating building, located in the eastern portion of the Site, was constructed in 1903. The main generating building is 10 stories tall at its tallest point and consists of a steel frame with brick, metal, and transite siding. The main generating building houses the single active electrical generation unit at the Site (Unit 19) as well as portions of Unit 18 (excluding the turbine), which operated from the early 1900s until the early 1990s, when it was retired and decommissioned. Former Units 15 and 17 were retired, decommissioned, and removed from the Site in the late 1960s.

The Site contained eight jet-engine peakers identified as the North and South Jet Peakers. The water intake and crib house were located east of the main generating building. South of the main generating building were the main wastewater treatment plant, make-up water aboveground storage tanks, pump house, and clarifiers. West of the main wastewater treatment plant were the equalization basin, oil skimmer, and the discharge to the South Branch of the Chicago River. A fuel oil built-in-place UST with a capacity of approximately 1 million gallons was located beneath the northwest gravel-covered portion of the Site. The Site also contained two 500-gallon aboveground storage tanks for diesel fuel and gasoline north of the main generating building.

In 2011, KPRG conducted a Phase I ESA at the Site. According to the Phase I ESA Report, (dated June 21, 2011), the Midwest Generation Will County Station delivered low-sulfur coal from Wyoming to the Site by barge along the Chicago Sanitary and Ship Canal and then to the

This document was prepared by Weston Solutions, Inc., expressly for U.S. EPA. It shall not be released or disclosed in whole or in part without the express written permission of U.S. EPA.

South Branch of the Chicago River. Delivered coal was staged on uncovered coal shipping barges with a capacity of over 1,400 tons per barge in Mason's Canal east of the Site. The Site used "just-in-time" delivery and thus did not have an on-site coal pile. Also associated with coal handling activities were coal unloading equipment, conveyors, and the breaker house.

Process wastewater was treated on site and discharged to the South Branch of the Chicago River under the terms and conditions of a NPDES permit. Cooling water was drawn from the South Branch of the Chicago River through concrete intake ports and returned to the river through a concrete-lined discharge channel. Bottom ash and slag settled out in basins west of the main generating building. Settling basin water was recirculated and reused in the main generating building. Storm water runoff from on-site process areas was pumped to an equalization storage basin (where oil/water separation occurred) before flowing into the wastewater treatment system. Sanitary wastewater generated on site was discharged to the MWRDGC for treatment.

3. PROJECT DESCRIPTION AND SCHEDULE

The U.S. EPA and WESTON START plan to perform the off-site gamma radiation screening and perimeter particulate air monitoring activities in November and December 2012. Gamma radiation screening will be conducted in residential neighborhoods. The gamma radiation screening will be conducted to determine if neighborhoods near the Sites have elevated radionuclide levels compared to similar neighborhoods farther away from the Sites in Chicago, Illinois (reference areas). Perimeter particulate air monitoring will be conducted at the Sites to collect real-time particulate readings during normal weather conditions (non-windy conditions) and abnormal weather conditions (windy conditions). U.S. EPA and WESTON START personnel will perform the gamma radiation screening and perimeter particulate air monitoring activities in Level D personal protective equipment.

4. PROJECT OBJECTIVES

The following are the project objectives for the gamma radiation screening and perimeter particulate air monitoring activities at the Sites:

This document was prepared by Weston Solutions, Inc., expressly for U.S. EPA. It shall not be released or disclosed in whole or in part without the express written permission of U.S. EPA.

- Collect and record meteorological data, including temperature, wind direction, wind speed, and current weather conditions using a RainWise-MKIII weather station
- Collect gamma radiation screening readings using a Victoreen 451P Pressurized Ion Chamber and track reading locations using a global positioning system (GPS) unit. Compile data using the real-time data collection software Field Analysis & Sampling Tool (FAST) and/or the wireless sensor communication system software VIPER Survey Controller (VIPER)
- During normal weather conditions (non-windy conditions), collect perimeter particulate readings using a DataRAM 4 (DR4)
- During abnormal weather conditions (windy conditions), collect perimeter particulate readings using a DR4

To accomplish these objectives, the gamma radiation screening will be conducted in real-time. Perimeter particulate air monitoring will consist of the following major components: (1) meteorological monitoring, (2) real-time readings of particulates during normal weather conditions, and (3) real-time readings of particulates during abnormal weather conditions. Section 5 discusses the activities that will be conducted to achieve the project objectives.

5. WORK PLAN ACTIVITIES

Under this Work Plan, the U.S. EPA and WESTON START will perform the activities discussed below at each Site as well as collect written and photographic documentation of the work.

5.1 METEOROLOGICAL MONITORING

A RainWise-MKIII weather station will be deployed at each Site. **Appendix A** provides the equipment operating guide (EOG) for the RainWise-MKIII weather station. The RainWise-MKIII is solar-powered with battery backups and transmits weather data in 2-second intervals. The following meteorological monitoring information will be obtained:

- Temperature (in degrees Fahrenheit [°F])
- Wind direction
- Wind speed
- Current weather conditions (such as partly cloudy, partly sunny, etc.)

This document was prepared by Weston Solutions, Inc., expressly for U.S. EPA. It shall not be released or disclosed in whole or in part without the express written permission of U.S. EPA.

Utilization of weather stations near both Sites will ensure the most accurate real-time weather information throughout the screening and monitoring activities. Weather data will be exported daily and evaluated with the particulate air monitoring data to provide a comprehensive understanding of conditions during Site activities.

5.2 GAMMA RADIATION SCREENING

The field team will be equipped with a Victoreen 451P Pressurized Ion Chamber and DR4 coupled to a GPS unit. **Appendix B** provides the EOG for the Victoreen 451P Pressurized Ion Chamber. The field team will use real-time data collection software FAST and/or VIPER to expedite data collection and analysis in the field. The radiation detector and GPS unit will be connected to a Panasonic Toughbook computer running the FAST and/or VIPER software. Using FAST and/or VIPER software, the teams will be able to simultaneously synchronize gamma dose rate with GPS point locations as well as visualize the data in a two-dimensional field.

The U.S. EPA has identified distinct residential areas where gamma radiation exposure rate measurements will be collected at each Site. **Figures 3a and 3b** show these areas at the Crawford Station and Fisk Station Sites, respectively. Continuous measurements will be collected on publicly accessible sidewalks to be determined in the field at 1 meter above the ground. Each distinct survey area will be completely surveyed at 1 foot per second.

Each distinct area will be divided into the following sub-survey areas:

- Public area next to the fenceline of each Site (such as roadway [asphalt] or concrete [sidewalk, parking lot, etc.])
- Downwind public area (such as roadway [asphalt] or concrete [sidewalk, parking lot, etc.])
- Reference area outside the influence of each Site (such as roadway [asphalt] or concrete [sidewalk, parking lot, etc.])

The radionuclide data will be collected from each neighborhood as point values. To properly compare the various number of individual point values from each neighborhood, these values will be randomly selected using a selection polygon (search window). The median values from

This document was prepared by Weston Solutions, Inc., expressly for U.S. EPA. It shall not be released or disclosed in whole or in part without the express written permission of U.S. EPA.

each search window will be used to represent a neighborhood. By using search windows, the data density per neighborhood will be similar and therefore improve the robustness of the statistical analysis. Graphical and inferential statistical tests will be used to evaluate the radionuclide levels. Some methods to be used include side-by-side box plots and multiple comparison procedures. U.S. EPA and START personnel will review data collected using the Victoreen 451P Pressurized Ion Chamber. Data irregularities and problems will be identified, flagged, and investigated. The Victoreen 451P Pressurized Ion Chamber will be functionally checked at the start and completion of each work day, and logs will be kept for each Victoreen 451P unit. At the end of the project, all data will be reviewed for accuracy. The final database will be kept with the Site files.

5.3 PERIMETER PARTICULATE AIR MONITORING

Off-site perimeter particulate air monitoring readings will be collected during normal weather conditions (non-windy) and abnormal weather conditions (windy). The table below lists the Pasquill-Gifford Stability Index, which will be used as reference for non-windy conditions (Class D, E, and F) and windy conditions (Class A, B, and C) for this Work Plan.

Pasquill Stability Class	Description	Surface Wind Speed and Cloud Cover Wind Measured (mph) at 33 foot Height
A	Very Unstable	Daytime; strong insolation and wind < 7 mph or moderate insolution and wind < 4 mph
B	Unstable	Daytime; strong insolation with wind between about 7 and 11 mph or moderate insolution with wind between 4 and 9 mph or slight insolution and wind < 4 mph
C	Slightly Unstable	Daytime; strong insolation and wind > 11 mph or moderate insolution with wind between 9 and about 12 mph or slight insolution and wind between 4 and 11 mph
D	Neutral	All overcast sky conditions, day or night; daytime and moderate insolation and wind> 12 mph; daytime and slight insolation and wind > 11 mph; nighttime and wind > 11 mph; nighttime and more than 50% cloud cover or with thin overcast and wind > 7 mph
E	Slightly Stable	Nighttime; thin overcast or > 50% cloud cover and wind < 7 mph; < 50% cloud cover and wind between 7 and 11 mph
F	Stable	Nighttime; < 50% cloud cover and wind < 7 mph

Notes:
< Less than
> Greater than
mph Miles per hour

This document was prepared by Weston Solutions, Inc., expressly for U.S. EPA. It shall not be released or disclosed in whole or in part without the express written permission of U.S. EPA.

U.S. EPA and START personnel will be present throughout the day during perimeter air monitoring to collect written and photographic documentation of on-site activities and off-site activities. Each DR4 will include a data logger and battery and continuous real-time particulate monitoring will be data logged. **Appendix C** provides the EOG for the DR4. During each workday, all monitoring equipment will be powered by internal equipment batteries. Batteries for the equipment will be replaced at the start of each day, and the DR4s will be checked throughout the day during each monitoring event to ensure proper functionality. One DR4 each will be deployed along the northern, eastern, southern, and western perimeters of each Site (**Figures 3a and 3b**). Each unit will be mounted to either poles or fencing identified in the field. The monitoring stations will be adjusted as needed to adapt to changes in sensitive population needs, wind direction, and the locations of Site activities. The stations may also be moved short distances as needed to avoid proximity to truck traffic and other activities. Real-time particulate monitoring will be data logged every 60 seconds for 8 hours during each monitoring event.

Based on visual observations by U.S. EPA and START personnel, if visible dust is observed beyond perimeter DR4s, U.S. EPA will have an option to monitor the perimeter with DR4s and the FAST and/or VIPER data collection software. WESTON START personnel will review the monitoring data collected from the DR4s on a daily basis. Data irregularities and problems will be identified, flagged, and investigated. The DR4 will be calibrated at the start of each work day, and calibration logs will be kept for each unit. At the end of the project, all data will be reviewed for accuracy, and the final database will be kept with the Site files.

6. DATA MANAGEMENT AND ANALYSIS

This section discusses data management and analysis procedures for the gamma radiation screening and perimeter particulate air monitoring activities conducted at the Sites.

6.1 GAMMA RADIATION SCREENING

Gamma radiation screening data will include survey data and non-spatial data that will be managed as discussed below. The following sections also the Flex Viewer site.

This document was prepared by Weston Solutions, Inc., expressly for U.S. EPA. It shall not be released or disclosed in whole or in part without the express written permission of U.S. EPA.

6.1.1 Survey Data (Spatial data)

FAST and/or VIPER software will be used to create a project file that will have a unique name indicating the Site name, survey date, and survey area. For each survey, an .mdb file will be created and saved under the unique project file name. This file will contain gamma dose rate survey data merged with *x* and *y* coordinates, background aerial photographs, dose rate threshold files, computer time stamps, and other instrument metadata files (such as factory calibration information). Following collection, data will be evaluated for anomalous spikes and completed by exporting the collected gamma data from a FAST .mdb file to a .csv file that can be reviewed and edited in Microsoft Excel. The post-processed Excel file can then be uploaded into SCRIBE. The data then will be available for extraction and export into various geographic information system (GIS) packages (such as ESRI's ArcView and ArcGIS and Dynamic Graphics' EarthVision) for subsequent data analyses. All spatial data also will be uploaded to the Region 5 Environmental Data Server (REDS).

6.1.2 Non-Spatial Data

Photographs, Work Plans, EOGs, and other non-spatial data will be uploaded into the shareable U.S. EPA Response Manager Database for storage and management.

6.1.3 Flex Viewer Site

SCRIBE, SCRIBE.NET, Response Manager, and ArcGIS products will be used to post data to a Flex Viewer site. The U.S. EPA workspace uses SQL Server 2008, IIS 7.x, ArcGIS 10x, and current implementations of SCRIBE and Response Manager to provide Flex Viewer with near-real-time data access. The Flex Viewer Site will be accessible through an internet connection and will allow viewing of real-time and geographically current datasets. The figure below shows the data management architecture:

This document was prepared by Weston Solutions, Inc., expressly for U.S. EPA. It shall not be released or disclosed in whole or in part without the express written permission of U.S. EPA.

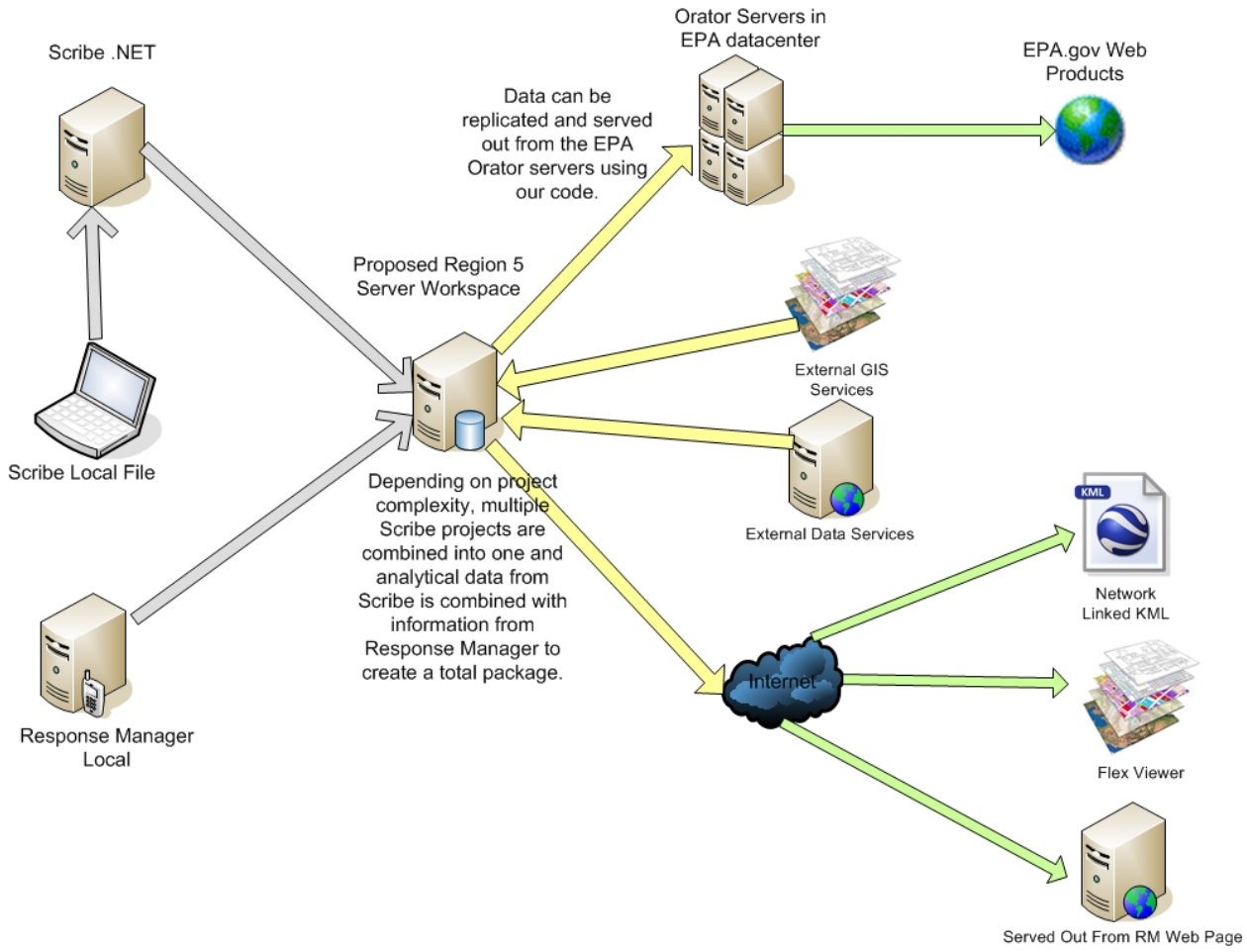

The architecture depends on standardized data acquisition and can be used to quickly display and report associated data. Examples of data streams include, but are not limited to, photographs, documents, videos, monitoring instrument output, analytical chemistry data, laboratory results, geo-spatial coordinates, and observational data. SCRIBE and Response Manager will be configured to support the data quality objectives, and the Flex Viewer site will be configured to show these data streams as determined by the U.S. EPA. Determining these data streams ahead of time is critical to successful implementation. However, each proposed database can be quickly configured to support sudden changes and generate new data streams.

This document was prepared by Weston Solutions, Inc., expressly for U.S. EPA. It shall not be released or disclosed in whole or in part without the express written permission of U.S. EPA.

6.2 PERIMETER PARTICULATE AIR MONITORING

Perimeter particulate air monitoring data will include survey data and non-spatial data that will be managed as discussed below. The following sections also discuss data reduction and analysis, contour grid creation, and grid processing and contouring.

6.2.1 Survey Data (Spatial data)

DR4 data will be data-logged during each 8-hour monitoring event and uploaded into the U.S. EPA's SCRIBE emergency response database. If Site conditions result in residential area particulate monitoring, FAST and/or VIPER software will be used to create a project file for the DR4 data. This file will have a unique name indicating the Site name, survey date, and survey area. Following collection, data will be evaluated for anomalous spikes and completed by exporting the collected gamma data from a FAST .mdb file to a .csv file that can be reviewed and edited in Microsoft Excel. The post-processed Excel file can then be uploaded into SCRIBE. The data then will be available for extraction and export into various GIS packages (such as ESRI's ArcView and ArcGIS and Dynamic Graphics' EarthVision) for subsequent data analyses. All spatial data also will be uploaded to the REDS.

6.2.2 Non-Spatial Data

Photographs, Work Plans, EOGs, and other non-spatial data will be uploaded into the shareable U.S. EPA Response Manager Database for storage and management.

This document was prepared by Weston Solutions, Inc., expressly for U.S. EPA. It shall not be released or disclosed in whole or in part without the express written permission of U.S. EPA.

FIGURES

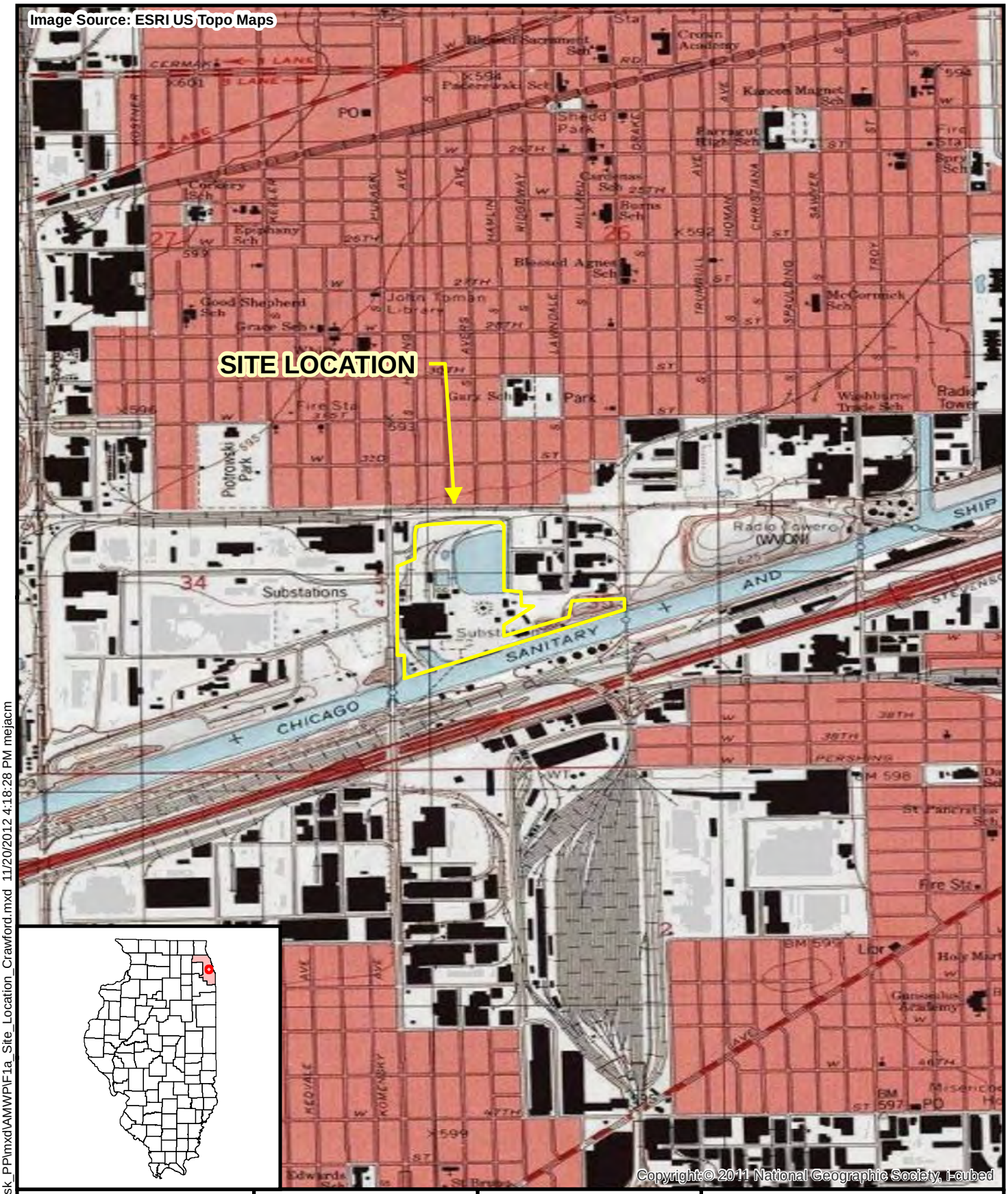

Legend

Site Boundary

0 2,000 Feet

N

Prepared for:
U.S. EPA REGION V

Contract No.: EP-S5-06-04
TDD: S05-0001-1210-016
DCN: 2016-2A-BBUP

Prepared By:
WESTON SOLUTIONS, INC

750 E. Bunker Court
Suite 500
Vernon Hills, Illinois 60061

Figure 1a
Site Location Map
Midwest Generation-Crawford Station
Chicago, Cook County, Illinois

FILE: D:\Crawford_Fisk_PP\mxd\AMWP\F1a_Site_Location_Crawford.mxd 11/20/2012 4:18:28 PM mejacm

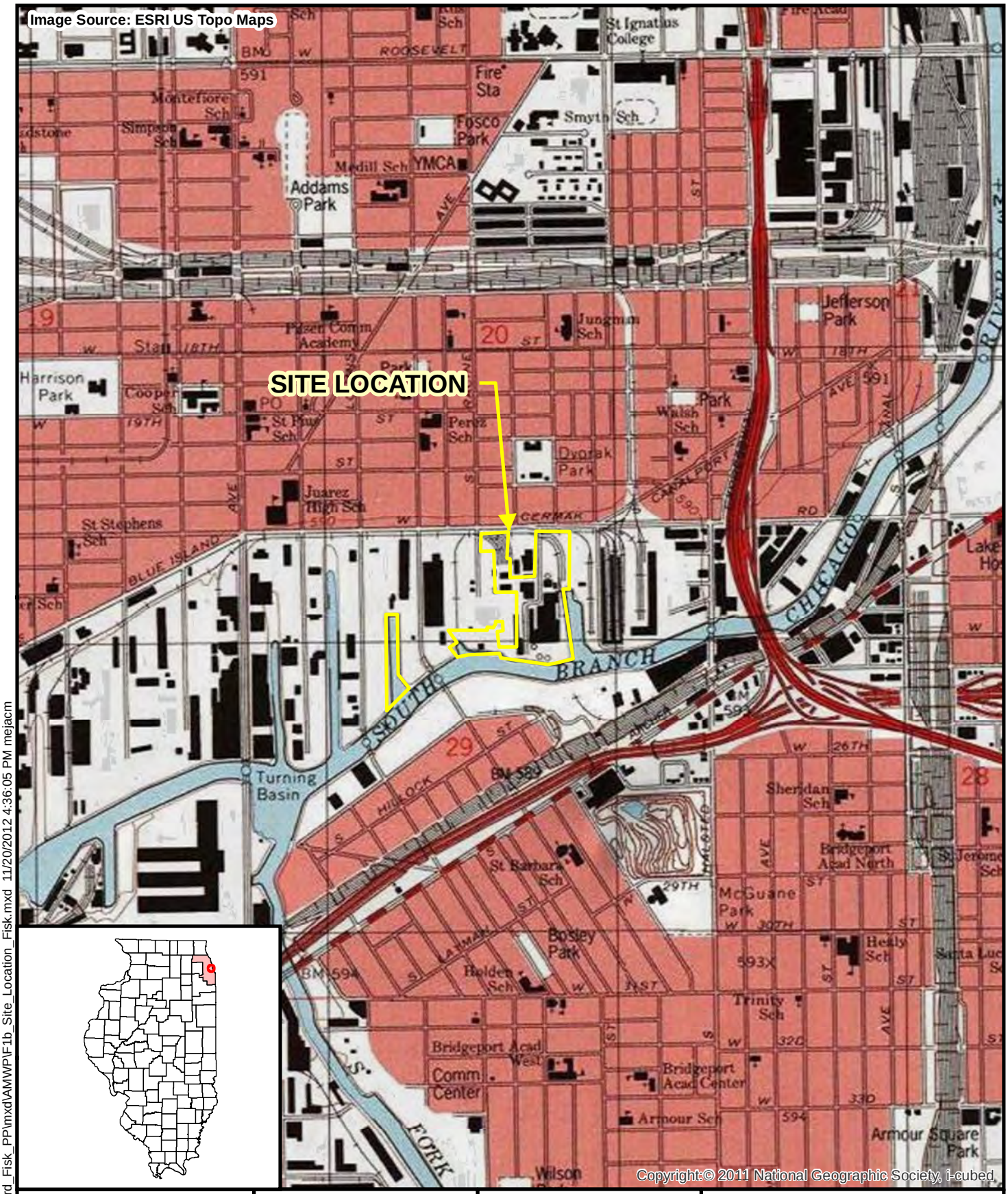

Legend

Site Location

0 2,000 Feet

N

Prepared for:
U.S. EPA REGION V

Contract No.: EP-S5-06-04
TDD: S05-0001-1210-018
DCN: 2016-2A-BBUP

Prepared By:
WESTON SOLUTIONS, INC

750 E. Bunker Court
Suite 500
Vernon Hills, Illinois 60061

Figure 1b
Site Location Map
Midwest Generation-Fisk Station
Chicago, Cook County, Illinois

FILE: D:\Crawford_Fisk_PP\mxd\AMWP\F1b_Site_Location_Fisk.mxd 11/20/2012 4:36:05 PM mejacm

Legend

Site Boundary

0 550 Feet

N

Prepared for:
U.S. EPA REGION V

Contract No.: EP-S5-06-04
TDD: S05-0001-1210-016
DCN: 2016-2A-BBUP

Prepared By:
WESTON SOLUTIONS, INC

750 E. Bunker Court
Suite 500
Vernon Hills, Illinois 60061

Figure 2a
Site Features Map
Midwest Generation-Crawford Station
Chicago, Cook County, Illinois

FILE: D:\Crawford_Fisk_PP\mxd\AMWP\F2a_Site_Features_Crawford.mxd 11/20/2012 4:53:53 PM mejacm

Legend

Site Location

0 400 Feet

N

Prepared for:
U.S. EPA REGION V

Contract No.: EP-S5-06-04
TDD: S05-0001-1210-018
DCN: 2016-2A-BBUP

Prepared By:
WESTON SOLUTIONS, INC

750 E. Bunker Court
Suite 500
Vernon Hills, Illinois 60061

Figure 2b
Site Features Map
Midwest Generation-Fisk Station
Chicago, Cook County, Illinois

FILE: D:\Crawford_Fisk_PP\mxd\AMWP\F2b_Site_Features_Fisk.mxd 11/20/2012 5:33:39 PM mejacm

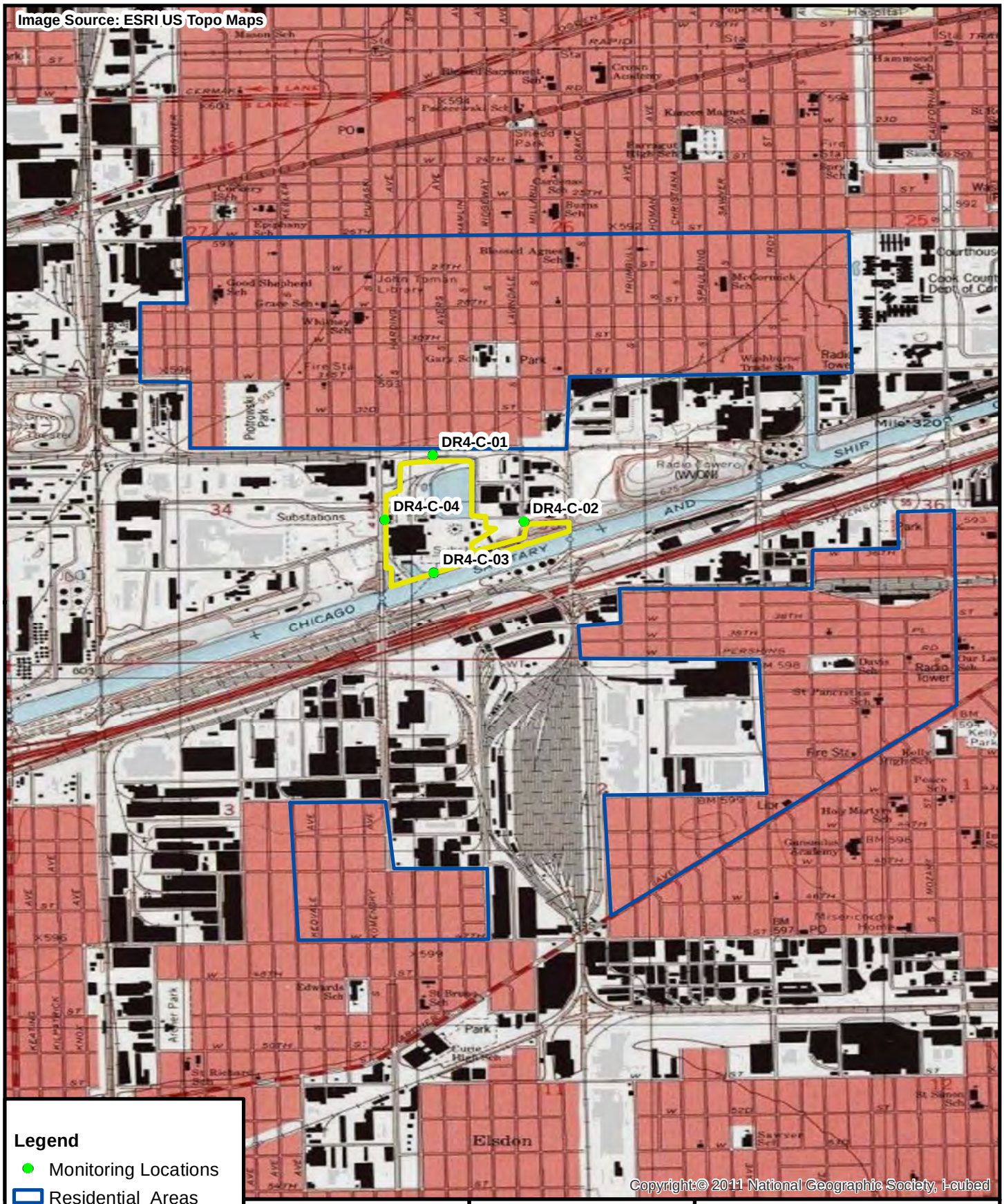

Legend

- Monitoring Locations
- Residential_Areas
- Site Boundary
- USA Topo Maps

0 2,500 Feet

N

Prepared for:
U.S. EPA REGION V

Contract No.: EP-S5-06-04
TDD: S05-0001-1210-016
DCN: 2016-2A-BBUP

Prepared By:
WESTON SOLUTIONS, INC

750 E. Bunker Court
Suite 500
Vernon Hills, Illinois 60061

Figure 3a
Air Monitoring Location /
Gamma Radiation Screening Map
Midwest Generation-Crawford Station
Chicago, Cook County, Illinois

FILE: D:\Crawford_Fisk_PP\mxd\AMWP\F3a_Air_Monitoring_Crawford.mxd 11/20/2012 4:45:25 PM mejacm

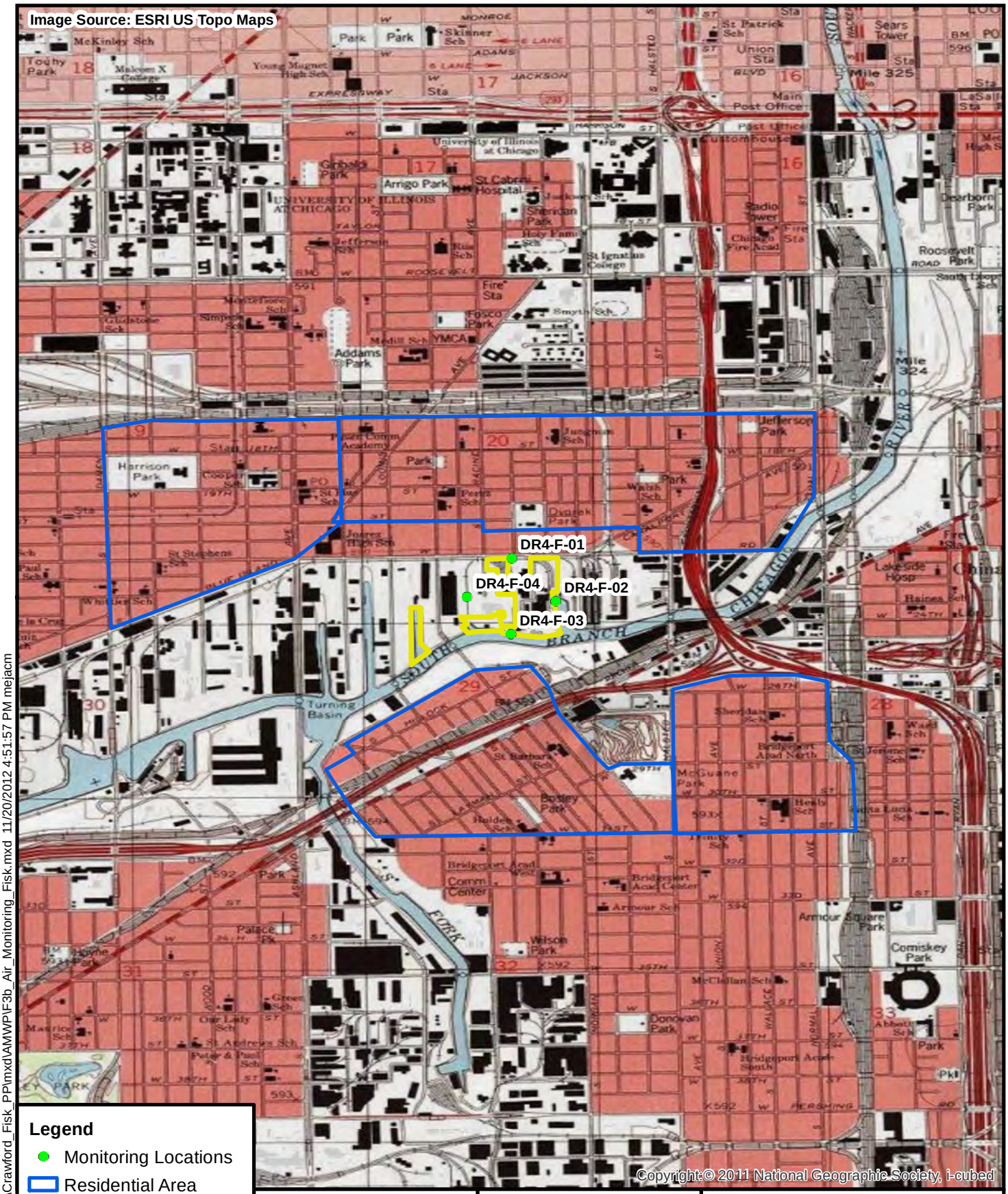

FILE: D:\Crawford_Fisk_PP\mxd\AMWP\F3b_Air_Monitoring_Fisk.mxd 11/20/2012 4:51:57 PM mejacm

Prepared for:
U.S. EPA REGION V

Contract No.: EP-S5-06-04
TDD: S05-0001-1210-018
DCN: 2016-2A-BBUP

Prepared By:
WESTON SOLUTIONS, INC

750 E. Bunker Court
Suite 500
Vernon Hills, Illinois 60061

Figure 3b
Air Monitoring Location /
Gamma Radiation Screening Map
Midwest Generation-Fisk Station
Chicago, Cook County, Illinois

APPENDIX A
EOG – RAINWISE-MKIII WEATHER STATION

NOTE: This equipment generates and uses radio frequency energy, and if not installed properly, that is, in strict accordance with the manufacturer's instructions, may cause interference to radio and television reception. It has been type tested and found to comply with the limits for a class B computing device in accordance with the specifications in Subpart J of Part 15 of FCC rules, which are designed to provide reasonable protection against such interference in a residential installation. However, there is no guarantee that interference will not occur in a particular installation. If this equipment does cause interference to radio or television reception, which can be determined by turning the equipment off and on, the user is encouraged to try to correct the interference by one or more of the following measures:

* Reorient the receiving antenna
* Increase the separation between the equipment and the receiver.
* Connect the equipment to an outlet on a circuit different from that to which the receiver is connected.
* Consult the dealer or an experienced radio/television technician for help.

Changes or modifications to this equipment not expressly approved by the party responsible for compliance could void the user's authority to operate the equipment.

GUARANTEE

RainWise, Inc. warrants this new weather station against defects in materials and workmanship for a period of two years from the date of purchase, and agrees to repair or replace any defective product without charge. Additionally, the solar panel is guaranteed for five years from the date of purchase.

This warranty does not cover damage resulting from accident, misuse or abuse, lack of reasonable care, the fixing of any attachment not provided with the product or damage due to a lightning strike. RainWise will not reimburse for take down or reinstallation charges. RainWise will not pay for any warranty service performed by a non-authorized repair service and will not reimburse the consumer for damage resulting from warranty service performed by a non-authorized repair service. No responsibility is assumed for any special, incidental or consequential damages. No other warranty, written or oral is authorized by RainWise, Inc. This warranty gives you specific legal rights, and you may also have other rights which may vary from state to state. Some states do not allow the exclusion, incidental or consequential damages, so the above exclusions and limitations may not apply to you.

To return a unit under warranty call 1-800-762-5723. For a period of 90 days after date of purchase, RainWise will issue a UPS call tag for pickup of the equipment at your address. RainWise will also pay for return UPS charges. If expedited shipping is requested, the excess cost must be paid by the customer. After 90 days from the date of purchase, the customer is responsible for all shipping charges. Make sure that the equipment is properly packed. . . preferably in the original box, because damage incurred in shipping is not covered by this warranty.

RainWise Inc.

P.O. BOX 443 - BAR HARBOR, MAINE 04609-0443 - (207) 288-5169

Service Department:

Ph: 1-800-762-5723 Hours: 8-5pm EST

Fax: 207- 288-3477

Email: service@rainwise.com

Visit the Rainwise web site www.rainwise.com for latest information and updates.

Weather Oracle®

MKIII & MKIII-LR

Instruction Manual

REV 3.2

RainWise Inc.

P.O. BOX 443 - BAR HARBOR, MAINE 04609-0443 - (207) 288-5169

1. Connecting the Display.

Please follow the following steps in sequence to install your display.

Connecting the receiver.
The black box housing the receiver is connected to the display by means of a 5-foot cable with telephone jacks on either end. Should you wish to extend this cable please contact our service department . The unit will be damaged if the wrong cable is used.

Connecting power.
The (9 volts DC, 500mA) wall transformer is connected to the black box receiver. Use only the wall transformer supplied. The transformer is different than the standard Oracle display and computer interface. Do not attempt to use these transformers with the MK III.

Battery backup.
The display requires 5 AAA alkaline batteries for battery backup. These are installed in the back of the display. Ensure that the batteries are installed in the correct direction, refer to the diagram on the rear of the display.
Mins and maxs and other parameters are stored in non-volatile memory and will not be lost if power is removed from the unit even without batteries. The batteries are used to keep the receiver active during a power outage. This ensures that you won't miss any new minimum or maximum values. The batteries will last for approximately 20 hours. For extended outages remove the batteries from the unit.

NEVER LEAVE DISCHARGED BATTERIES IN THE UNIT, THEY MAY LEAK.

Selecting a mounting location.
The display may be wall mounted using the keyhole slots provided or table mounted using the U-shaped metal bracket.

Wall Mounting:
Before drilling any holes, ensure that the location you have selected is within the units range. Refer to " Making sure you have communication".

The internal temperature sensor is very accurate and therefore the inside temperature reading will record the exact temperature

Quick Reference Guide

Setting the Clock/Calendar:
- MAX – SELECT – TIME – MAX
- Up/down with MIN/MAX
- SELECT when done
- Keep hitting SELECT to Exit

Display a Max or Min:
- MAX/MIN- Parameter button

Reset a Max or Min:
- Hit SELECT while a max or min is being displayed

Resetting rainfall:
- Hit MAX, RAINFALL, SELECT while the last reset is being displayed.

Turning Displays On and Off
- MAX – SELECT – BRIGHTNESS
- Press parameter buttons to toggle on and off.
- SELECT when done
- Keep hitting SELECT to Exit

Make a window toggle
- SELECT – window button

Lock display
- MAX – SELECT – HUMIDITY
- Press HUMIDITY button to toggle to "Loc".
- SELECT twice when done.

Unlock display
- HUMIDITY and BAROMETER together.

4. Diagnostics Mode

The diagnostic mode is seldom needed or used. It provides information about sensor unit voltage, software versions, communications and the ability to reset the display back to factory defaults.

To enter the Diagnostics Mode press **MIN** followed by **SELECT.**

HUMIDITY – shows the software versions of the display and sensor unit. The two digits on the left represent the display version number and the two on the right is the station version.

TEMPERATURE – for checking the battery condition of the sensor unit. The value toggles between the current, maximum and minimum battery voltage during the last 24 hours.

TIME – for communication diagnostics. The number on the right indicates the reception of good data packets. Bad data packets are displayed on the left.

WIND SPEED – for communication diagnostics. The value increments with every data byte received. The number wraps at 100. The byte count as well as the packet counters can be reset by pressing the wind speed button.

Press **SELECT** to exit back to normal operation.

In the event of a problem our service technicians will explain the operation of these features

Factory reset.
The display can be reset to factory defaults if the **BAROMETER** button is pressed while in Diagnostic mode.

WARNING: ALL DATA WILL BE ERASED!

Once the button has been pressed the unit will reset. The EEPROM memory is tested, this may take a few seconds.
If the process is halted and the time display shows “bad” contact the Rainwise service department.

at the mounting location. For example if the unit is mounted on an exterior wall the reading will be affected by the temperature of the wall, which may be several degrees different than the rooms ambient temperature. To compensate for this affect the offset can be adjusted. Refer to “Fine-tuning” in the Setup mode.

Table Mounting:
Simply insert the two ends of the bracket into the holes provided on the back of the display.

IMPORTANT: After locating the display, be sure that the receiver box is standing upright with the antenna vertical to ensure optimum reception.

Powering up for the first time
When the display is powered for the first time the time will show 12:00 and the other displays will show ----. Within 30 seconds the unit should receive information from the sensor unit. When this happens the dashes will be replaced with current values. If after a couple of minutes the dashes don’t disappear try another location. If you feel you are well within the sensor units range and there is still no reception refer to “*Diagnostic Mode*”.

2. Setup Mode.

To enter the setup mode press the **MAX** key and then press the **SELECT** key. All the displays will blank and the MIN and MAX LEDS will be flashing.

Setting the clock and date.
Press the **TIME** button (press on the word TIME). The current time will appear.

- Press the **MAX** button once. Use the **MIN** and **MAX** buttons to select 12 hour or 24 hour format. Press **SELECT** to accept.
- Press the **MAX** button once.
- The hour will now be flashing. To change the hour press the **MAX** button to increase and **MIN** to decrease it. The hours are shown in 24-hour military time.
- Press the **SELECT** button when the hour is correct. The minutes will now flash. Repeat the same steps as with the hour adjustment.
- Press **SELECT** when done. Note that the seconds are set to zero when **SELECT** is pressed.
- The month will flash. Set the month in the same way.
- Press **SELECT** when done.
- The day will flash. Set the day in the same way.
- Press **SELECT** when done.

Setting the units of measure and fine-tuning.
Units of temperature, wind speed, rainfall and barometric pressure can be set independently. You should still be in “Setup Mode” at this point indicated by blank displays and flashing MIN and MAX LEDS.

Temperature

- Press **TEMPERATURE** (press the word TEMPERATURE).
- The temperature display will show either “ U 0” or “U 1”. This indicates the selected temperature units. “0” is for Fahrenheit and “1” is for Celsius. The THI units are also set by this option.
- Press **MAX** button to select Celsius (“1”) or **MIN** for Fahrenheit (“0”).
- Press **SELECT** when done.

Wind Speed

- Press **WIND SPEED** (press on the words WIND SPEED).
- The wind speed display will show “U.0”,”U.1”,”U.2” or “U.3”. This indicates the selected wind speed units.
  “U.0” is mph, ”U.1” is kph,”U.2” is knots and “U.3” is m/s.

Setting brightness.
Pressing the BRIGHTNESS button will dim the displays. If the displays are already dim they will return to full brightness.

Automatically toggling display windows.
Display windows with multiple parameters can be set to toggle every two seconds. One, all or none of the windows can be set to toggle.

The following windows can be set to toggle:

- Time/Date
- Temperature
- Humidity/THI
- Rainfall

To start a window scrolling press **SELECT** and then press the button bellow the window you want to scroll.
To stop a window scrolling press the button bellow the window.

3. Operating the Display.

The displays in detail.

Time: Displays either current time or date.
Temperature: Displays outside and inside temperature as well as wind chill and dew point.
Humidity: Displays Relative Humidity and the Temperature Humidity Index (THI).
Barometer: Displays barometric pressure and indicates if the pressure is falling, rising or is steady (LEDS off).
Rainfall: Displays two rainfall counters current and accumulated. These may be reset independently.
Wind Speed: Displays current wind speed and rose shows wind direction.

Selecting display parameters.
Pressing the button below a display will cycle through the available display options. The LED next to the display will indicate the current selection. The scroll mode will cycle through these selections automatically.

Displaying mins and maxs.
To display a maximum value press **MAX** and then press the button below the desired display. The maximum value will be displayed along with the date and time of occurrence. The min or max of the current selection will be displayed. Ensure that the desired selection is being displayed before doing the max/min sequence. If the window is scrolling stop it first by pressing the button below the display before pressing **MAX.**

Resetting mins and maxs.
Minimum values are displayed in the same manner as the maximums.
Maxs and mins can be reset by pressing **SELECT** while a max or min is being displayed. The new value will flash to indicate that it has been reset.

Resetting Rainfall.
To reset rainfall counters first select which counter you want to reset by pressing the **RAINFALL** button. The LED will indicate which counter is selected (CUR or ACC). Press the **MAX** button then press the **RAINFALL** button. Press **SELECT** while the last time/date reset is being displayed in the time window.

- Select an option using the **MAX** and **MIN** buttons. Press **SELECT** when done.

Rainfall
- Press **RAINFALL** (press on the word RAINFALL).
- The rainfall display will show either " U 0" or "U 1".
  This indicates the selected units. "0" is for inches and "1" is for millimeters.
- Press **MAX** button to select mm ("1") or **MIN** for inches ("0").
- Press **SELECT** when done.
- You can preset both rainfall counters by adjusting the value up and down using the **MIN** and **MAX** buttons. Press **SELECT** after each adjustment to save the preset value.

Barometer
- Press **BAROMETER** (press on the word BAROMETER).
- The barometer display will show either " U 0" or "U 1". This indicates the selected units. "0" is for inches of Mercury and "1" is for millibars.
- Press **MAX** button to select mbar ("1") or **MIN** for inches ("0").
- Press **SELECT** when done.
- Assuming no offset has been entered, the current absolute pressure will be displayed.
- Call a local airport for the current sea-level pressure.
- Adjust your display to match this value by pressing **MAX** to increase the value and **MIN** to decrease it.
- (*Optional Step*) To display the actual offset value press **MAX** and **MIN** at the same time. You can set this back to zero by pressing the **SELECT** key. You must be holding down both **MAX** and **MIN** when you do this.
- Press **SELECT** when done.

Turning displays on and off.
Displays may be turned on or off independently.

- Press **BRIGHTNESS**.
- Each display will show either "**on**" or "**oFF**".
- To change a display's status, press the button below the desired display. This will toggle the status.
- Press **SELECT** when done.

Press **SELECT** to return to normal operation.

Now that the clock is set, you should reset all the min's and max's as well as the rainfall counters. – See *4. Operating the Display.*

Regarding the Setup Mode…

After entering the setup mode you can change one or all of the parameters, there is no set sequence. Simply select the parameter you wish to change by pressing the appropriate button. Once you have changed that parameter you will be returned to the Setup mode. Choose another parameter or press **SELECT** to exit back to normal operation.

Fine tuning inside temperature.
As the inside temperature is affected by a number of environmental factors you may wish to adjust the temperature offset up or down by a couple of degrees to compensate for these factors.
Only perform this adjustment once the unit has had time to stabilize. This may take up to 30 minutes after initial power up.
Follow these steps to perform the adjustment.

- Enter the Setup mode by pressing **MAX** followed by **SELECT**. The max and min LEDs should be flashing.
- Press **TEMPERATURE**.
  The current units will be displayed either “U 0” or “U 1” .
- Press **SELECT**. The designator setting "ch 0" or "ch 1" will be displayed.
- Press **BRIGHTNESS**.
  The current inside temperature will be displayed. This value may be adjusted by means of adding an offset. Don’t change this unless you are sure that the value is not correct.
- Press **MAX** to increase the offset and **MIN** to decrease it.
- Press **MAX** and **MIN** at the same time to display the actual offset value. You can set this back to zero by pressing the
  SELECT key. You must be holding down both **MAX** and **MIN** when you do this.
- Press **SELECT** when done.
- Press **SELECT** again to exit the setup mode.

Setting the temperature designator character.
A designator character can be enabled in the temperature window.
This feature is typically used when the temperature window is set to scroll. To set or clear this feature follow these steps:

- Enter the Setup mode by pressing **MAX** followed by **SELECT**. The max and min LEDs should be flashing.
- Press **TEMPERATURE**. The current units will be displayed either “U 0” or “U 1” .
- Press **SELECT**. The designator setting "ch 0" or "ch 1" will be displayed.
- To enable the designator press the **MAX** button "ch 1". To clear the designator press the **MIN** button "ch 0".
- Press **SELECT** when done.
- Press **SELECT** again to exit the setup mode.

Presetting rainfall counts
Both rainfall counters can be preset to any value between 0 and 99.99. To set follow these steps:

- Enter the Setup mode by pressing **MAX** followed by **SELECT**. The max and min LEDs should be flashing.
- Press **RAINFALL**. The current units will be either “U 0” or “U 1” .
- Press **SELECT**. Adjust the CUR counter using the **MAX** and **MIN** buttons. Press **SELECT** when done.
- Adjust the ACC counter in the same way.
- Press **SELECT** when done.
- Press **SELECT** again to exit the setup mode.

Locking the display.
The display can be locked to prevent tampering. The lock will disable the **SELECT** key. This will disable the following functions:

- Min and max reset.
- Entry into the setup mode.
- Entry into the diagnostic mode.

To lock the display do the follow:
- Enter the Setup mode by pressing **MAX** followed by **SELECT**. The max and min LEDs should be flashing.
- Press **HUMIDITY**.
- The display will show either “**run**” or “**Loc**”
- Toggle this selection by pressing **HUMIDITY**.
- When “**loc**” is displayed, press **SELECT**
- Press **SELECT** again to exit the setup mode.

To unlock the display press **HUMIDITY** and **BAROMETER** together. This will cause the unit to reset. When the unit resets “- - - -” will be shown in the windows until information is received from the roof top sensor assembly.
If the display is powered down it will automatically unlock.

NOTE: To exit the setup mode at any point keep pressing **SELECT** until the unit returns to normal operation (In most cases twice).

APPENDIX B
EOG – VICTOREEN 451P PRESSURIZED ION CHAMBER

FLUKE®
Biomedical

Victoreen®
451P & 451P-DE-SI
Ion Chamber Survey Meter

Operators Manual

February 2005
Manual No. 1020101000 Rev. 2
©2004, 2005 Fluke Corporation, All rights reserved. Printed in U.S.A.
All product names are trademarks of their respective companies

Fluke Biomedical
Radiation Management Services

6045 Cochran Road
Cleveland, Ohio 44139
440.498.2564

www.flukebiomedical.com/rms

Table Of Contents

Section 1: **General Information 1-1**
1.1 Introduction 1-1
1.2 Features 1-1
1.3 Receiving Inspection 1-2
1.4 Specifications 1-2

Section 2: **Operation 2-1**
2.1 External Controls 2-1
2.2 Installation 2-2

Section 3: **Theory Of Operation 3-1**
3.1 Introduction 3-1
3.2 Firmware 3-2

Section 4: **Maintenance 4-1**
4.1 Introduction 4-1
4.2 Routine Cleaning 4-1
4.3 Storage 4-1
4.4 Battery Replacement 4-2
4.5 High Voltage Battery Board Replacement 4-3
4.6 Replacement Parts Information 4-3
4.7 Recalibration and Service Information 4-4

Section 1
GENERAL INFORMATION

1.1 Introduction

The Model 451P Ion Chamber Survey Meter is a hand-held, pressurized, battery operated unit designed to measure gamma and x-ray radiation above 25 keV, and beta radiation above 1 MeV, using the latest CMOS and LCD technology. The 451P case is constructed of high strength ABS plastic. A gasket seals moisture out of the unit and provides a cushion for the internal components. The Model 451P readout consists of a 2 1/2 digit liquid crystal display and a 100 segment analog bargraph. The bargraph contains a zero segment and twenty groups of five segments each. A permanent scale is located on the display screen. The major divisions of the scale indicate the units corresponding to the range that the meter is measuring. Units of measurement are displayed next to the 2 1/2 digit display. LOW BAT and FREEZE will appear on the display when the instrument is operating in these modes. External controls consist of an ON/OFF button and a MODE button. The unit is auto-ranging and auto-zeroing and has an auto ON backlight. The backlight automatically comes on when the ambient light conditions fall below twilight levels. An internal factory set alarm will blink the display if the rate exceeds 5 R/hr. Two 9-volt batteries, located in the rear of the instrument, provide over 200 hours of continuous operation.

Model 451P & 451P-DE-SI
Ion Chamber Survey Meter

1.2 Features

1.2.1 Overrange Rate

If the instantaneous radiation rate measured by the Model 451P exceeds 5 R/h, the 'R' in 'mR/h' or the 'Sv' in 'Sv/h' displayed will blink to notify the user that a potential error in the integrated radiation value exists. The blinking will stop when the integrated value is cleared. This, however, may also clear the log data RAM.

1.2.2 Low Battery Indicator

There are about six hours of operation remaining when the LOW BATTERY indicator first becomes visible. When the LOW BATTERY indicator blinks, there is less than one hour of operation remaining. These times are for two batteries installed and from the first occurrences of these indications. If the instrument is turned off during a low battery condition, the batteries will recover somewhat, but time of operation remaining will be less. The LCD low battery indicator is disabled during communication mode. Be sure to use fresh batteries when calibrating this instrument.

WARNING

If chamber bias is LO, the instrument can't measure high radiation rates accurately. Service to the instrument is required.

Verify the chamber bias is low. Turn the unit off and replace with new 9-volt batteries. Power up the unit. After the self-test, if blinking low battery reoccurs the bias is low. Refer to Section 4 Maintenance.

1.2.3 Warm-up Time

The pressured ion chamber collection potential is 105 Vdc and is derived from the 5 lithium cells. The warm-up time for an instrument that has been off 12 or more hours is about four minutes for readings less than 20 µR/h in a 10 µR/h or less background.

1.3 Receiving Inspection

Upon receipt of the unit:

1. Check the shipping cartons(s) and their contents for in-shipment damage. If damage is evident, file a claim with the carrier and contact Fluke Biomedical, Radiation Management Services Repair Coordinator at 440.498.2564 or 800.850.4606 immediately.
2. Check that all items listed on the packing slip are present and in good condition. If any items are missing or damaged, contact Fluke Biomedical, Radiation Management Services Repair Coordinator at 440.498.2564 or 800.850.4606 immediately.

1.4 Specifications

Radiation Detected	Beta above 1 MeV & gamma above 25 KeV
Operating Ranges	0 to 500 µR/hr (0 to 5 µSv/h), 0 to 5 mR/h (0 to 50 µSv/h) 0 to 50 mR/h (0 to 500 µSv/h), 0 to 500 mR/h (0 to 5 mSv/h) 0 to 5 R/h (0 to 50 mSv/h)
Accuracy	± 10% of reading between 10% and 100% of full-scale indication on any range, exclusive of energy response (calibration source is ^{137}Cs)
Detector	230 cc volume air ionization chamber, pressurized to 6 atmospheres Plastic chamber wall 200 mg/cm2 thick

Warm-Up Time	Less than one minute for initial operation when the instrument is in temperature equilibrium with the surrounding area and about 4 minutes for readings less than 20 µR/h in a 10 µR/h or less background
Drift	After seven minutes operation, 0.04 mR/h equivalent, or less
Response Time	Time measured from 10% to 90% of final value for a step increase/decrease in radiation rate such that a range change does not occur: **0 to 500 µR/h (0 to 5 µSv/h) range:** 5 seconds **0 to 5 mR/hr (0 to 50 µSv/h) range:** 2 seconds **0 to 50 mR/h (0 to 500 µSv/h) range:** 1.8 seconds **0 to 500 mR/h (0 to 5 mSv/h) range:** 1.8 seconds **0 to 5 R/h (0 to 50 mSv/h) range:** 1.8 seconds **NOTE:** In pulsating field, the instantaneous rate should not exceed 5 R/h for proper integration; instantaneous exposure rate is still limited to 5 R/h
Precision	Within 5% reading
Readout	**Liquid Crystal Display**: contains an analog bar graph with a permanent scale on the display and a 2 1/2 digit display **Analog Display:** the bargraph consists of 100 segments, 2 ½ inches long; the scale has five major divisions; the appropriate value for the operating range of the instrument will appear below the scale **Digital Display:** the digital display is 2 1/2 digits followed by a significant zero digit depending on the operating range of the instrument. The leading 1/2 digit is blank, or a “1” or a “0” for clarity. Units of measure appear to the right of the digital display. Appropriate multipliers also appear on the display **Units:** as indicated under Range, programmable in R/h or Sv/h. Appropriate multipliers also appear on the display **Auto-On Backlight:** turns on when ambient light is less then twilight conditions
External Controls	ON/OFF button, MODE button
Automatic Features	Ranging and zeroing are fully automatic.
Environmental	**Operating Temperature Range**: - 4º to + 122ºF (- 20º to + 50ºC) **Relative Humidity Range**: 0 to 100%, non-condensing **Geotropism**: less than 1%
Dimensions	8.5 (l) x 4.5 (w) x 8.6 in (h) (21 x 11.4 x 21.3 cm)
Weight	Approximately 2.6 lb (1.2 kg)
Batteries	Two 9-volt batteries provide over 200 hours continuous operation

** Specifications are subject to change without notice.*

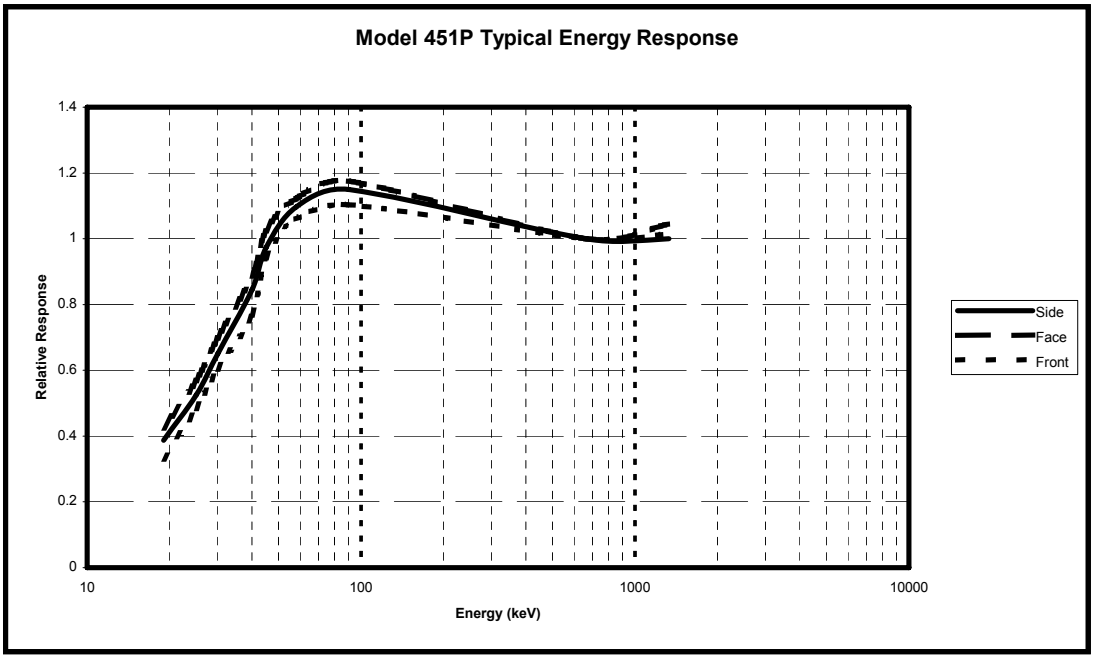
Model 451P Typical Energy Response
Relative Response
1.4
1.2
1
0.8
0.6
0.4
0.2
0
10
100
1000
10000
Energy (keV)
Side
Face
Front

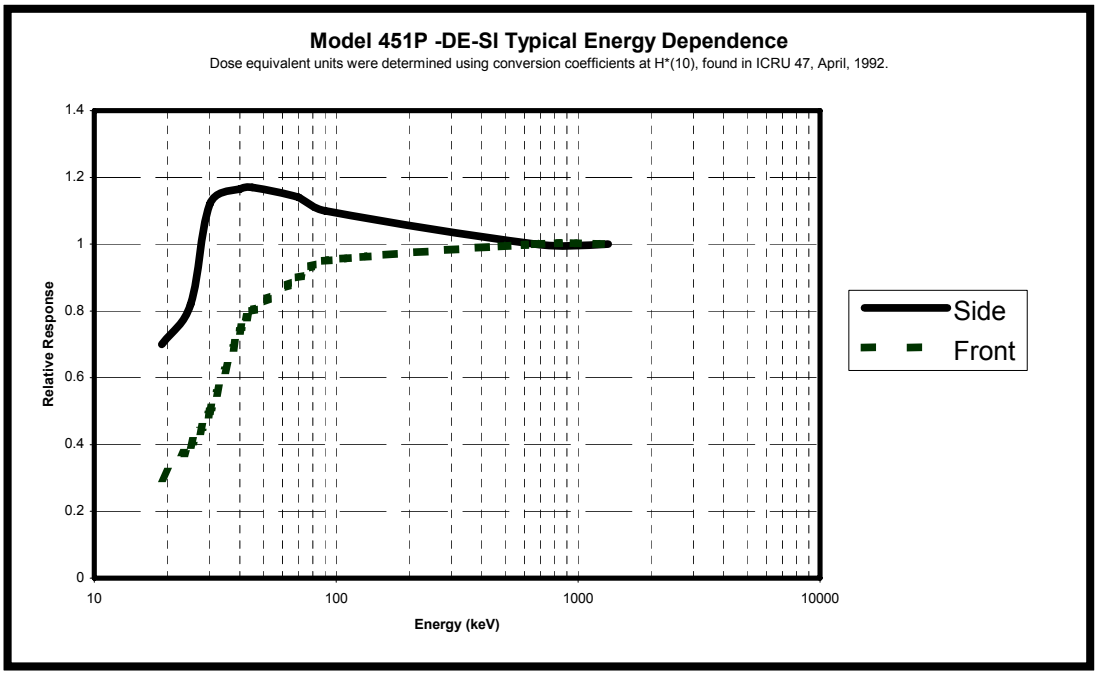
Model 451P -DE-SI Typical Energy Dependence
Dose equivalent units were determined using conversion coefficients at H*(10), found in ICRU 47, April, 1992.
Relative Response
1.4
1.2
1
0.8
0.6
0.4
0.2
0
10
100
1000
10000
Energy (keV)
Side
Front

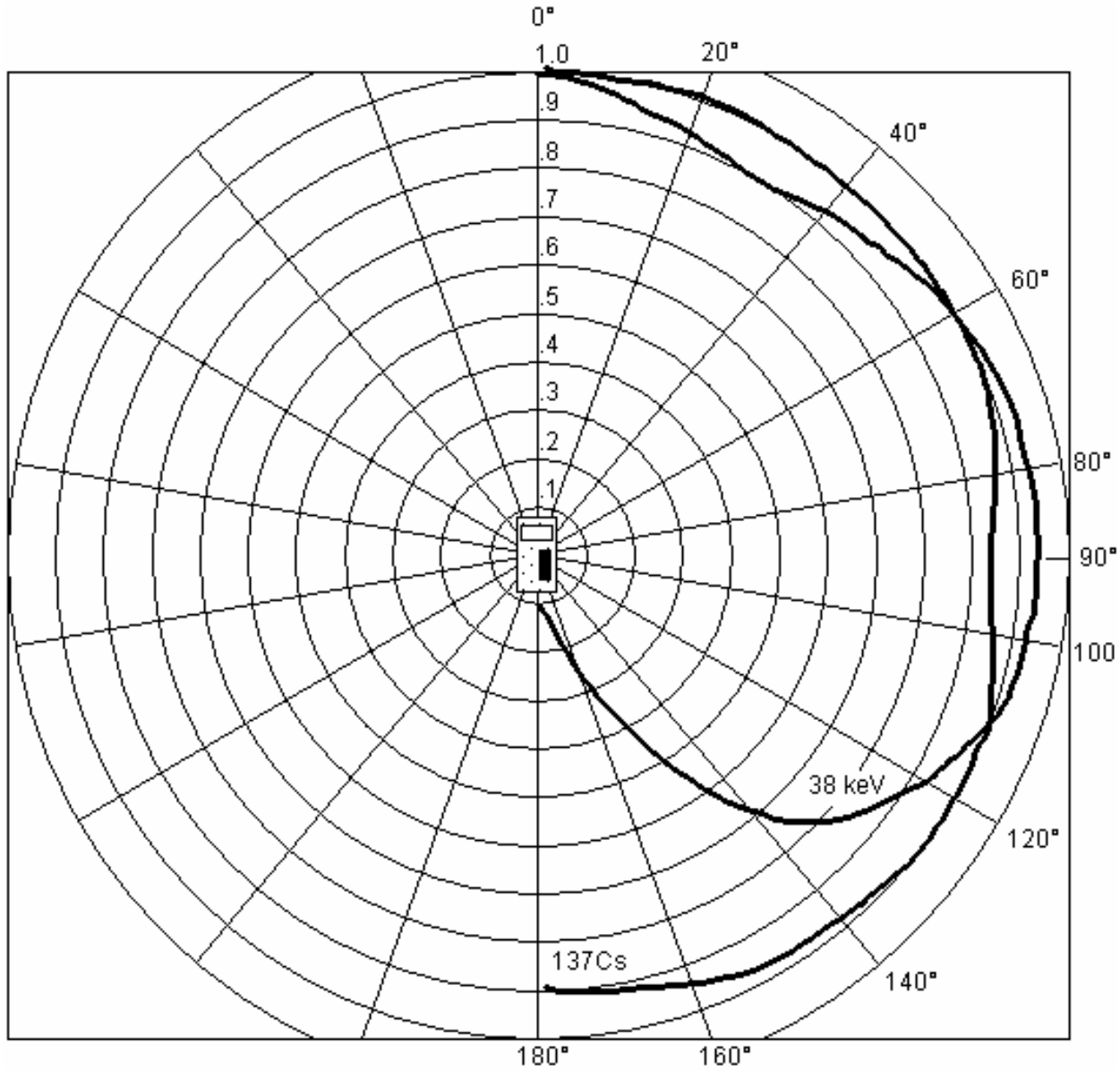

Survey Meter Angular Response

Section 2
Operation

2.1 External Controls

There are two external controls on the survey meter: an ON/OFF button and a MODE button.

2.1.1 ON/OFF Button

Press the ON/OFF button to turn the unit on. All the elements in the display turn on and the microprocessor runs through an initialization procedure. Part of the procedure includes reading the calibration coefficients stored in EEPROM. If an EEPROM read error occurs, an error code (E1) will be displayed at power-on and unity calibration coefficients will be used.

The bargraph and digital display will show a reading that decreases as the instrument stabilizes. The initial reading usually starts in the 5 R/h range and decreases through the lower ranges to a reading of less than 50 µR/h within 120 seconds. When the element---s in the display turn off, with the exception of those necessary for normal operation, the user can begin the measurement process.

NOTE

A one-minute warm-up period is recommended before making a measurement. If the unit experiences an extreme temperature change (e.g., moving inside from outside), a longer warm-up period may be required to obtain a value less than 50 µR/h.

2.1.2 MODE Button

To configure the MODE button to the opposite function without a RS-232 connection, use the following procedure:

1. Turn the unit off.
2. Press the MODE button.
3. Turn the unit on while continuing to press the MODE button.
4. Release the MODE button when the display is in the “all elements on” condition.
5. Use the MODE button to toggle the instrument between the Rate mode and the newly selected Freeze or Integrate mode.

2.1.3 Freeze Mode

When configured to select the Freeze mode, the MODE button acts as a toggle switch. Press the button until FREEZE appears on the display. Operation in the Freeze mode gives the user a constant reference of the highest exposure rate obtained from the time the freeze function is initialized. The highest reading will appear as a single bar on the bargraph. The current reading will continue to be displayed on the digital display and the bargraph. If a measurement is obtained which exceeds the freeze bar reading, the freeze bar will move to the higher measurement point. The operating range of the 451P remains locked on the highest range attained during the Freeze mode so that the scale and the multiplier remain the same.

For example, assume the scale units appear as 10, 20, 30, 40, 50, and the freeze bar is at 47 mR/h on the bargraph. If the 451P then measures a radiation field of 120 mR/h, the scale units will change to 100, 200, 300, 400, 500 and the freeze bar will appear on the graph at 120 mR/h. If the survey meter measurement goes below 100 mR/h, the units on the scale will not change until the survey meter is taken out of the freeze mode. However, the digital display will continue to show the current reading. The survey meter will operate in the Freeze mode until the user toggles the MODE button to return to the normal operating mode.

2.1.4 Integrate Mode

The Integrate mode is operational 30 seconds after the instrument is turned on and all of the time after that. However, the integrated exposure can only be displayed when the MODE button has been configured as a toggle to display exposure rate/integrated exposure. If the MODE button is pressed within the 30-second initialization period of the unit, the display will read “0”. When integration starts, “0.0 µR” will be displayed. Toggle MODE to read exposure rate as required. To reset the integration display, toggle the display from the Rate mode to the Integrate mode. Keep the MODE button pressed for about 5 seconds. The display will clear, and then read “0.0 µR.” Exposures are accumulated up to 99 R.

2.1.5 Self Test

When the 451P survey meter is first turned on, it runs through a functional self test procedure. During this self-test, the firmware version of the unit is displayed. If the unit passes the self-test, it will go into the normal operating mode. If the unit fails the self-test, it will remain locked with the firmware revision displayed. Consult a Fluke Biomedical, Radiation Management Services Repair Coordinator for corrective action.

2.2 Installation

The Model 451P periodically tests for input at its RS-232 port. The model 451P sends test signals, if the RS-232 is present and operational, the survey meter will enter into the communications mode. The 451P display will clear and the letters “CO” will be displayed as an indication that the unit is in the communications mode.

The RS-232 port is compatible with a CRT or printing terminal having a standard RS-232 connector and a 1200-baud rate. A computer with a modem or terminal emulator may be used in place of the terminal. The terminal or computer should be set up for a 1200 baud, 7 data bits, no parity bit, and 1 stop bits (i.e., 7 data bits, no parity, and 1 stop bit). To establish communications, perform the following:

1. Attach the RS-232 cable assembly to the back of the survey meter.
2. When “CO” appears on the 451P display, press the computer or terminal spacebar.

If the Model 451 displays the “CO” message, but there is no response at the terminal press the spacebar twice.

If there is a problem getting the communications message (CO) to be displayed on the 451P:

1. Be sure the computer communication port is active.
2. The 451 communication transmitter/RCR pair is active when it detects a negative mark voltage at the receiver input. (CO) shall appear on the 451 display.
3. Press space bar twice.

If there is still a problem, consult the Fluke Biomedical, Radiation Management Services Repair Coordinator for further instructions.

Section 3
Theory Of Operation

3.1 Introduction

NOTE

The user is cautioned about indiscriminately opening and disassembling the instrument. The ionization chamber is pressurized and sealed at the factory, because the high impedance circuits of the ion chamber are easily contaminated with grease and dirt that produce electrical leakage. The ion chamber cannot be disassembled for servicing

The Model 451P is a pressurized ionization chamber instrument calibrated in exposure rate units of roentgens/hour (or sieverts/hour) for gamma and x-radiation in the energy range of 20 keV to 2 MeV. The Model 451P responds to, but is not calibrated for beta radiation. Beta energies that can be measured are above 1 MeV.

The liquid crystal, supertwist display shows the radiation rate in digital and analog form with the range multiplier values also showing on the scale. It is a lightweight electronic device that requires the computational capabilities of a microprocessor to make it operate. It functions in a multiplex mode called quadriplex. This mode uses four (4) back-planes to accommodate the 128 elements of the display.

The microprocessor performs data collection, averaging, and multiplication by stored calibration factors, range changing, and battery check functions, in addition to driving the LCD. Between computational periods, it “sleeps” in a low power mode to conserve battery power. The microprocessor reads stored information from an electrically erasable memory, EEPROM, which is used by the program for calibration and display units. The EEPROM will retain stored data when the instrument is OFF or when the batteries are removed. Data can be entered into the EEPROM using the RS-232 port.

Collection voltage for the ion chamber is approximately 105 V obtained from 5 lithium cells. All internal power for the instrument is supplied by the 9-volt batteries.

The digital and bargraph displays read directly. The bargraph display update periods are listed in the table below. The digital display updates at one second intervals nearest the current bar display update. The bargraph and digits display do not always show the same reading because the bargraph is faster than the digital update. It is more convenient to watch the bargraph when the reading is changing quickly and to read the value of a slowly changing or static reading by looking at the digital display.

The bargraph display is a digital presentation, programmed to appear as a linear analog meter display. It is also referred to as the analog display throughout this manual.

Bargraph display update periods

Range	Update Period
5 R/h (50 mSv/h)	0.05 second
500 mR/h (5 mSv/h)	0.05 second
50 mR/h (500 µSv/h)	0.05 second
5 mR/h (50 µSv/h)	0.05 second
500 µR/h (5 µSv/h)	0.15 second

There are 20 bars between each major division. The numerical values of the five major divisions change appropriately for the range in which the instrument is operating. For instance, the first major division would have the numeric value of 1, 10 or 100. The minor divisions are worth 0.05, 0.5 or 5. The incremental nature of both the digital reading and the analog bargraph provide greater accuracy for reading in different portions of the scale. For example, on the 0-5 mR/h range, with a digital reading of 2.0 and above, the analog bargraph can be read more accurately than the digital display. Below a digital reading of 2.0, the digital display is more accurate because it consists of three significant digits. The stated precision of the digital display is accurate only above a reading of 5% of the full scale.

NOTE

The same analysis applies to all the other ranges because the number of significant digits or active bar elements are independent of the position of the decimal point or the units multiplier.

There is a small hysteresis built into the range changing circuit so that the instrument does not keep changing scales if the reading is at the threshold of range change. It is important in calibration of the instrument that the calibration coefficients track from range to range because an oscillatory condition can occur if the calibration on a given range is low and the coefficient for the next more sensitive range is high.

3.2 Firmware

The program in the 451 ROM is proprietary to Fluke Biomedical, Radiation Management Services. The firmware version appears in the digital part of the LCD display (prior to the “all elements on” display) when the instrument is turned on. The firmware program consists of three main parts: operation, communication, and monitoring.

The operation portion of the firmware performs all of the control functions needed to read and control the electrometer and range change amplifier, calculate radiation rate, and display the calculated values on the LCD Display. In addition, the measured data are smoothed and displayed in an exponential manner with time that simulates the rise and fall time of an ordinary meter display. Range changing is performed automatically. If a large increase in signal is detected, the range changing skips to higher ranges bypassing exponential rise with time to get to the new reading quickly. The instrument continually integrates the detected radiation signal and saves the accumulated amount that may be read by the operator at any time. The operator may also reset the integration process.

When the RS-232 cable is attached to the unit, the 451P detects its presence and runs the communications portion of the program. The communication parameters are 1200, N, 7, and 1. Serial communications are performed in software rather than using a hardware device. The operation program can be run from communications in the Test mode.

Section 4
Maintenance

4.1 Introduction

Very little maintenance is required for the survey meter, but some periodic attention may be necessary, especially if the instrument is used in harsh industrial conditions.

4.2 Routine Cleaning

Do not immerse the Model 451P or 451P-DE-SI. The unit is not waterproof, liquid could damage the circuits. The unit should be kept clean and free from dirt and contamination. The unit may be cleaned by wiping with a damp cloth using any commercially available cleaning or decontaminating agent.

4.3 Storage

Storage of Fluke Biomedical, Radiation Management Services instruments must comply with Level B storage requirements as outlined in ANSI N45.2.2 (1972), Section 6.1.2 (.2). The storage area shall comply with ANSI N45.2.2 (1972), Section 6.2 Storage Area, paragraphs 6.2.1 through 6.2.5. Housekeeping shall conform to ANSI N45.2.3 (1972).

Level B components must be stored within a fire resistant, tear resistant, weather tight enclosure, in a well-ventilated building or equivalent.

Storage of Fluke Biomedical, Radiation Management Services instruments must comply with the following considerations:

1. Inspection and examination of items in storage must be in accordance with ANSI N45.2.2 (1972), Section 6.4.1.
2. Requirements for proper storage must be documented and written procedures, or instructions shall be established.
3. In the event of a fire, post-fire evaluation must be in accordance with ANSI N45.2.2 (1972), Section 6.4.3.
4. Removal of items from storage must be in accordance with ANSI N45.2.2 (1972), Sections 6.5 and 6.6.

4.4 Battery Replacement

The LOW BAT message will appear on the display approximately six hours prior to the instrument becoming inoperable. To ensure that the instrument operates to specification, it is recommended that the batteries be changed within 4 hours after the LO BAT message appears. The instrument will function on one battery for approximately 100 hours, allowing replacement of one battery at a time if the instrument must remain operational during battery changeover. Regular or alkaline batteries can be used for replacement purposes.

Both 9-volt batteries are located in the rear of the unit and are easily accessible and replaceable with the battery cover removed.

NOTE

Be sure to observe proper polarity when replacing the batteries.

Battery Access

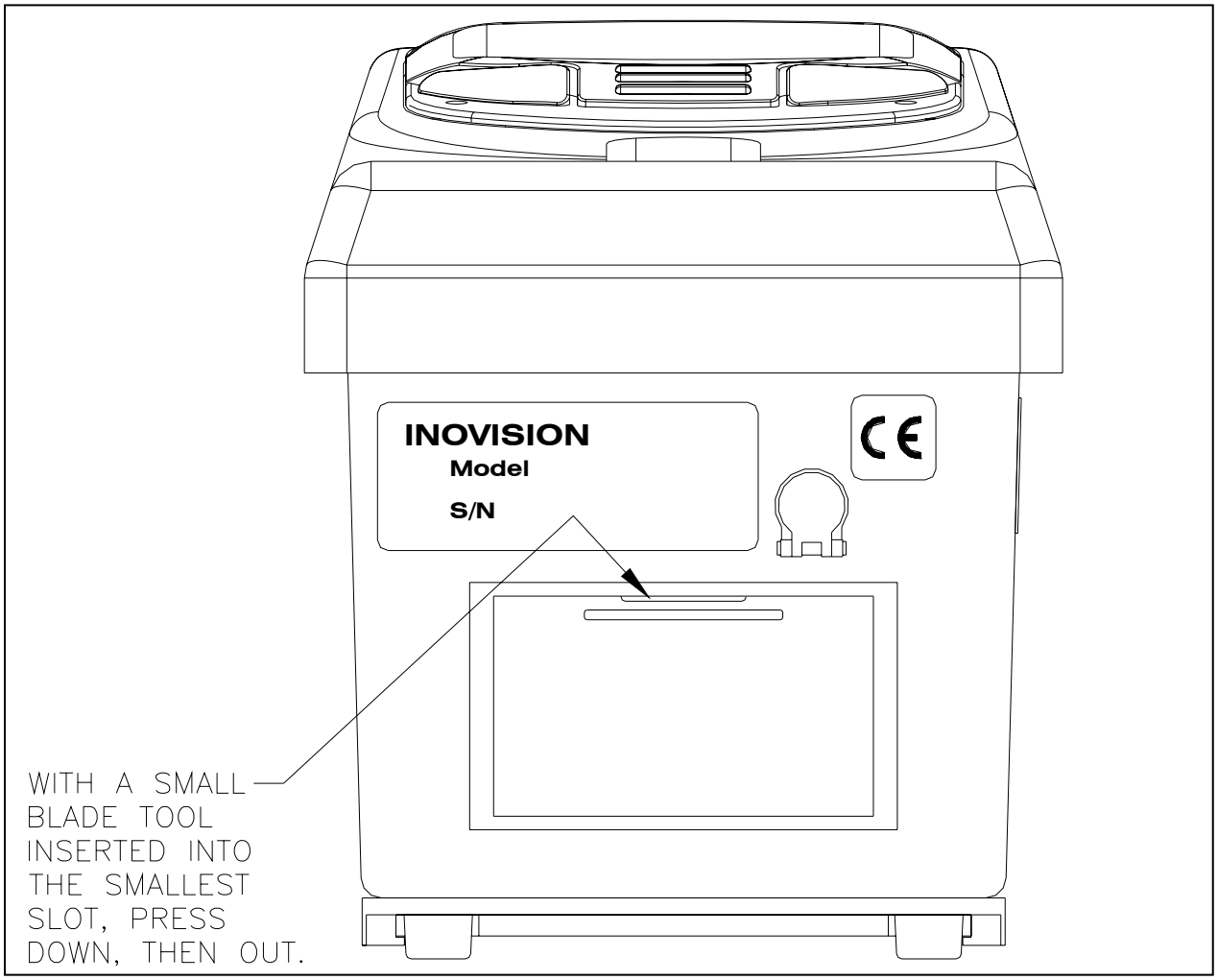

4.5 High Voltage Battery Board Replacement

This assembly contains the lithium cells for chamber bias.

1. Remove the 9-volt batteries to be sure that the instrument will remain off during the disassembly process.
2. Remove the four screws from the case top.
3. Carefully remove the case bottom from the thick gasket that seals the top and bottom.
4. Remove the two screws, lock washers and metal spacers, holding the battery board in place.
5. To replace the five 21 V lithium cells, remove the old lithium cells by unsoldering, and solder into place the new lithium cells. Battery boards and cells are listed in the Replaceable Parts Information section.

WARNING

Surface below High Voltage Board is conductive!

6. Secure the battery board to the survey meter assembly with the two screws, lock washers and aluminum spacers removed in step 4.
7. Secure the case top to the case bottom, with the gasket in between, using the four screws removed in step 2.
8. Replace the 9-volt batteries, being sure to observe proper polarity.

4.6 Replaceable Parts Information

Fluke Biomedical, Radiation Management Services maintains a complete inventory of all normal replaceable parts. To place an order, or to obtain information concerning replaceable parts, contact the Fluke Biomedical, Radiation Management Services Repair Coordinator at 800.850.4606, 440.498.2564, or Fax: 440.542.3682.

Replaceable parts list

Part Number	**Description:**
1020023002	Keypad Overlay, Yellow
1020023001	Keypad Overlay, Red
1020024003	Handle, Gray
1020024002	Handle, Yellow
450P-1-20	High Voltage Battery Board Assembly
181061	Lithium Battery Assembly, 7-CR 1220 Lithium Cells
1020026000	Handle, Foam Grip

4.7 Recalibration And Service Information

If your instrument needs recalibration or repair, we request that you consult the Fluke Biomedical, Radiation Management Services Repair Coordinator at 800.850.4606, 440.498.2564, or Fax: 440.542.3682.

More information concerning the operation, application, or service of your instrument may be obtained from the applications engineer at the numbers listed above.

Fluke Biomedical
Radiation Management Services

6045 Cochran Road
Cleveland, Ohio 44139
440.498.2564

www.flukebiomedical.com/rms

APPENDIX C
EOG – DR4

DataRAM 4

GENERAL INFORMATION	
Equipment Name:	DataRAM 4
Model:	DR-4000
Manufacturer:	Thermo Corporation
National Manufacturer Contact:	Telephone: 866-282-0430 Website: http://www.thermoscientific.com/ search "DataRAM 4"

NOTE: Guides are to be used by trained personnel only and DO NOT replace the manufacturer's operations or technical manuals. These guides were developed by field personnel for utilization by EPA and their contractors and are helpful in quick start-up and operations. Various limitations have been identified through the experience of the development group. Different makes, models, and updates to this equipment may change the limitations. It is recommended that calibration, maintenance, and use be recorded in a logbook. Additional product information may be found in the accompanying Equipment Operating Guides.

SPECIFICATIONS	
Uses:	The DataRAM 4 Model DR-4000 measures the concentration of airborne particulate matter (aerosolized liquid or solid), mean particle size, and air temperature and humidity. The DR-4000 provides direct and continuous readout as well as electronic recording of the monitoring data.
Limitations:	The DR-4000 is not designed to sample highly corrosive aerosols or solvent fumes. The relatively low flow rate of 2.0 liters per minute (LPM) may preclude the instrument from fence line monitoring involving low concentrations of contaminants in soil. The instrument must be protected from precipitation and may fail under extreme temperature. High humidity may cause elevated readings.
Response Range:	Response range: 0.0001 mg/m^3 (0.1 µg/m^3) to 400 mg/m^3 (400,000 µg/m^3)
Alarm Level:	The alarm function can be enabled and the alarm level (trigger threshold) can be set per site-specific requirements. Press any key to momentarily silence an activated alarm.
Product Safety:	Not intrinsically safe.
Battery:	The instrument can be powered by an internal rechargeable sealed lead-acid gel-cell battery with 7.2 Ah, 6V, 20-hour average run time, and 12 hour average recharge period. The instrument can also be powered by alternating current via the universal voltage charger/power supply, 100-250 V, 50 - 60 HZ. *Note: To enable operation with either internal battery or the charger/power supply, the 3-position power selector switch on the back of the unit should indicate* ***INT. BATT.***
Calibration:	The DR-4000 should be annually cleaned and calibrated by the manufacturer. Prior to collecting data in the field the instrument should be automatically zeroed with internal check out; follow prompts within the start-up menu for details. A reading of BACKGROUND HIGH following the zeroing of the instrument is indicative that the internal optics require factory cleaning or servicing.

DataRAM 4

Additional Information:	Do not operate the DR-4000 with the pump cap covering inlet in place. Do not operate the DR-4000 without the internal filter in place. Routinely change dust filters and maintain a record of the replacement. The instrument may be equipped to monitor for PM-10 or PM-2.5 size particles only. The instrument may be configured using the DR4-COM software and an RS-232 cable.

QUICK OPERATIONS GUIDE		
START UP:	1.	Ensure the rear panel power switch is in the upward **INT. BATT.** position. Remove the sampling inlet protective cap by pulling up on the knurled metal outer piece and lifting it off. Place the sampling inlet protective cap on the inlet storage post located on the bottom left corner of the rear panel of the instrument. Install inlet tubing, omni-directional sampling inlet, and PM 10 or 2.5 separators (if required). Confirm that the internal HEPA filter is installed.
	2.	Press and hold **ON/OFF** until product information appears on screen; the MAIN MENU screen will follow shortly.
	3.	**ZERO/INITIALIZE OPERATION** From the MAIN MENU screen press ▲ or ▼ until the flashing cursor appears next to ZERO/INITIALIZE. Ensure the instrument is located in a background environment and press **ENTER**. The pump will run for 299 seconds to complete the zero/initialize process. Press **EXIT** to return to the MAIN MENU screen. Refer to the operator's manual for troubleshooting if the instrument did not zero/initialize correctly.
	4.	**SELECTING LOGGING PARAMETERS** From the MAIN MENU screen press **NEXT** to display the EDIT MENU screen**.** Press ▲ or ▼ until the flashing cursor appears next to LOGGING PARAMETERS, then press **ENTER**. • Press ▲ or ▼ until the flashing cursor appears on the LOG DATA row. Press **+/–** to toggle between the DISABLED and ENABLED functions. • Press ▼ until the flashing cursor appears on the LOG PERIOD row. Press ◄ or ► to select between hours, minutes, and seconds, then press **+/–** to increase or decrease the values. For example, a 1 minute log period is displayed as 00:01:00. • Press ▼ until the flashing cursor appears on the TAG # row; this value is usually 01. • Press ▼ until the flashing cursor appears on the AUTO START row. Press **+/–** to toggle between the DISABLED and ENABLED functions; for most field applications this setting will be DISABLED. Return to the MAIN MENU screen by pressing **EXIT,** then **NEXT**.
	5.	**SELECTING SET-UP PARAMETERS** From the MAIN MENU screen press **NEXT** to display the EDIT MENU screen**.** Press ▲ or ▼ until the flashing cursor appears next to SETUP PARAMETERS, then press **ENTER** to access the first of five parameter displays. This initial display will indicate DISPLAY AVG, CAL FACTOR, UNITS, and SIZE CORRECT • Press ▲ or ▼ until the flashing cursor appears on the DISPLAY AVG row. Press **+/–** to adjust the display averaging times. Short averaging times provide faster response but noisier (more fluctuating) data, whereas long averaging times decrease response time but provide smoother (less fluctuating) data. • Press ▼ until the flashing cursor appears on the CAL FACTOR row. The calibration factor is a multiplier of the calibration slope programmed at the factory; a factor of 1.00 indicates that the calibration slope is identical with the factory slope. • Press ▼until the flashing cursor appears on the UNITS row. The measurement

		parameters are mass concentration in µg/m^3, scattering coefficient in (Mm)$^{-1}$, or visual range in kilometers. Typically this value is set to µg/m^3. • Press ▼ until the flashing cursor appears on the SIZE CORRECT row. The particle size correction refers to the computation of the mass correction, and is usually set to DISABL. Press **NEXT** to access the second parameter display of RH CORRECTION, TEMPERATURE UNITS, and FLOW RATE. • Press ▲ or ▼ until the flashing cursor appears on the RH CORRECTION row. Press **+/–** to toggle between the DISABLED and ENABLED functions. The relative humidity correction, when enabled, automatically corrects for particle growth due to a high humidity environment. *Note: This correction applies only when mass concentration units have been selected.* • Press ▼ until the flashing cursor appears on the TEMPERATURE UNITS row. Press **+/–** to toggle between degrees Celsius (°C) and degrees Fahrenheit (°F). Temperature data is usually collected in degrees Celsius. • Press ▼ until the flashing cursor appears on the FLOW RATE row. The flow rate can be adjusted over the range of 1.00 to 3.00 liters per minute (LPM); the standard operating flow rate is 2.00 LPM. Press **NEXT** to access the third parameter display of ANLG OUT, SERIAL MODE, and DEVICE #. Refer to the DR-4000 Instruction Manual for specific information related to analog output signal, serial mode digital communication, and instrument identification number. Press **NEXT** to access the fourth parameter display of TIME and DATE. • Press ▲ or ▼ until the flashing cursor appears on the TIME row. Press ◄ or ► to select between hours, minutes, and seconds, then press **+/–** to adjust the values. For example, 3:45 pm is displayed as 15:45:00. • Press ▼ until the flashing cursor appears on the DATE row. Press the ◄ or ► to select between day, month, and year, and press **+/–** to adjust the values. • Press **ENTER** to activate the changes. Press **NEXT** to access the fifth and final parameter display of ALARM, LEVEL, AUTO ZERO, and INTERVAL. Refer to the DR-4000 Instruction Manual for specific information related to alarm function, action levels, auto zero function, and time intervals between consecutive automatic zeroing. Press **EXIT** to return to the EDIT MENU screen, then press **NEXT** to return to the MAIN MENU screen.
	6.	**START RUN OPERATION** From the MAIN MENU screen press ▲ or ▼ until the flashing cursor appears next to START RUN, then press **ENTER** to begin data collection. Press **EXIT** to terminate data collection, then confirm the termination by pressing **ENTER**. The DR-4000 will perform a purge function for approximately 1 minute after termination.
VIEW DATA:	1.	From the MAIN MENU screen press ▲ or ▼ so the flashing cursor appears next to VIEW/ TRANSFER DATA, then press **ENTER**. On the following screen press ▲ or ▼ so the flashing cursor appears next to VIEW LOGGED DATA, then press **ENTER.**
	2.	The first of three data screens will be displayed; press **NEXT** to scroll through the remaining data display screens. After reviewing the data press **EXIT** twice to return to the MAIN MENU**.** *(Note: The VIEW LOGGED DATA display screen conveniently displays Start Time, End Time, Average Concentration, and Average Diameter. Consider recording this data in the site logbook since it is otherwise not readily accessible).*

DataRAM 4

TRANSFER DATA TO A PC:	1.	Connect the DR-4000 to the communication port on the PC using an RS-232 cable.
	2.	Open the DR4-COM software to allow the DR-4000 to communicate with the PC; (refer to the DR-4000 Instruction Manual for a copy of the DR4-COM software). From the DR4-COM window on the PC select the DATA TEXT tab.
	3.	From the MAIN MENU screen press ▲ or ▼ so the flashing cursor appears next to VIEW/ TRANSFER DATA, then press **ENTER**. Press the ▲ or ▼ so the flashing cursor appears next to TRANSFER TEXT FILE, then press **ENTER** to transfer the data to the PC. Upon successful completion of the data transfer press **EXIT** to return to the MAIN MENU.
DELETING LOGGED DATA:	1.	From the MAIN MENU screen press ▲ or ▼ so the flashing cursor appears next to VIEW/ TRANSFER DATA, then press **ENTER**. Press ▲ or ▼ so the flashing cursor appears next to DELETE LOGGED DATA, then press **ENTER**.
	2.	Press ▲ or ▼ to select either DELETE TAG DATA or DELETE ALL DATA, then press **ENTER**. Press **ENTER** again to confirm deletion, then **EXIT** to return to the MAIN MENU.
SHUT DOWN:	1.	Press **ON/OFF** one time. Press **ENTER** to confirm shut down or **EXIT** to return to the previous display.
	2.	Remove the inlet tubing, omni-directional sampling inlet, or PM separators (if attached). Replace the sampling inlet protective cap. Properly store the instrument and recharge the batteries.

DataRAM 4

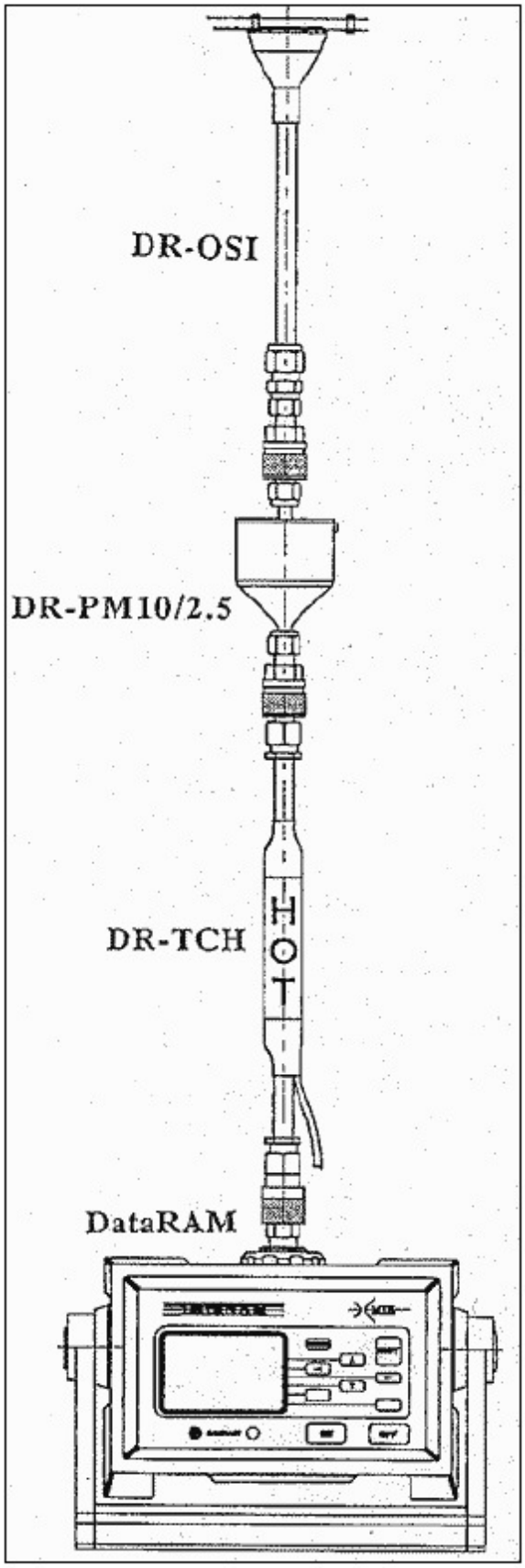

Figure 1

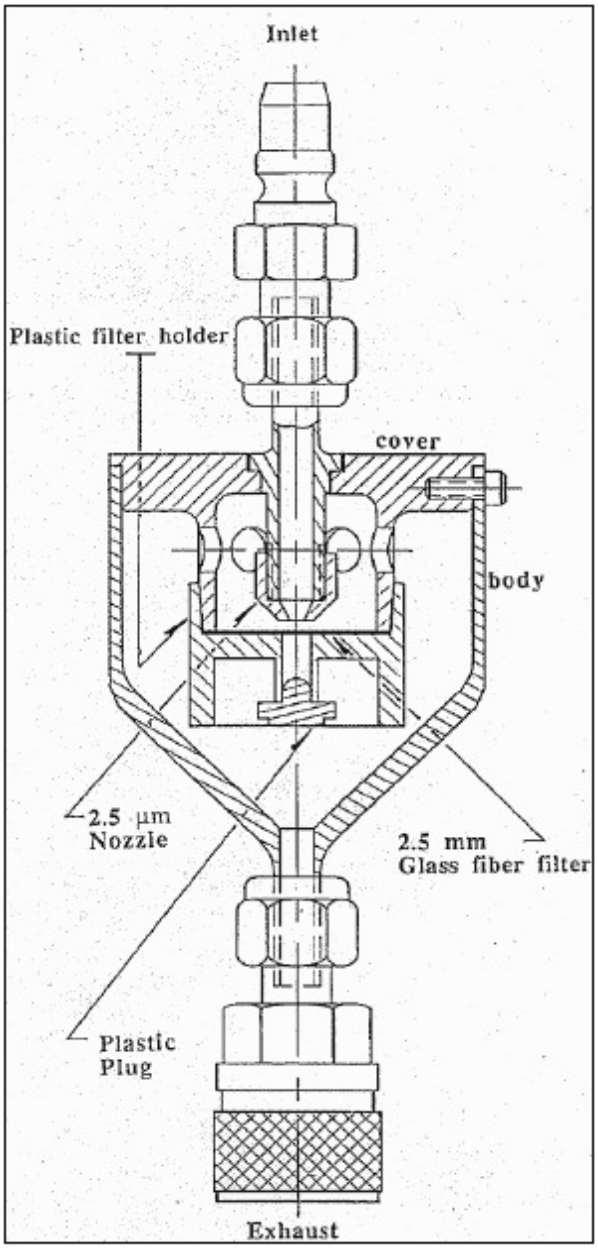

Figure 2