SDMS ADMINISTRATIVE RECORD IMAGERY INSERT FORM

SITE NAME	ORMET CORP		
DOC ID #	80252		
DESCRIPTION OF ITEM(S)	TOPOGRAPHIC MAPS		
REASON WHY UNSCANNABLE	____ ILLEGIBLE	or	__X__ FORMAT OVERSIZED
DATE OF ITEM(S)	04-20-1987		
NO. OF ITEMS	3		
PHASE	__X__ Remedial ____ Removal ____ Deletion Docket Volume __7__ of __14__ _____ Original ____ Update # ____		
O.U.			
FRC	Box # __2__ Folder # __1__		
COMMENTS			

APPENDIX B

SURVEY DATA FOR SOIL BORINGS, MONITORING WELLS SAMPLE COLLECTION POINTS, AND OTHER FEATURES

ORMET CORPORATION
HANNIBAL, OHIO

APPENDIX B
ELEVATIONS AND COORDINATES
OF
MONITORING WELLS,SOIL BORINGS,AND SAMPLE COLLECTION POINTS
ORMET CORPORATION
HANNIBAL,OHIO

BORING/WELL OR SAMPLE LOCATION	ELEVATION OF WATER-LEVEL MEASURING PT. (ft. M.S.L.)	STICK-UP OF MEASURING PT. ABOVE GROUND (feet)	ELEVATION OF GROUND SURFACE (ft. M.S.L.)	PLANT COORDINATES
MW-1	668.07	1.96	666.11	N2234.68/W4007.15
MW-2	668.12	1.80	666.32	N1815.47/W4001.93
MW-3	645.17	2.11	643.06	N767.00/W4016.53
MW-4	661.07	1.87	659.20	N782.99/W4836.05
MW-5	668.16	1.93	666.23	N1437.00/W4835.03
MW-7	667.94	1.72	666.22	N1982.31/W4834.24
MW-8	667.71	1.08	666.63	N910.05/W5517.74
MW-9	666.59	1.61	664.98	N1002.98/W6379.96
MW-10	667.16	0.82	666.34	N949.92/W5894.39
MW-11	667.31	1.56	665.75	N1148.75/W4831.64
MW-12	636.73	1.43	635.30	N1514.41/W3336.88
MW-13	661.44	1.93	659.51	N1605.51/W2489.18
MW-14	653.59	1.75	651.84	N1700.78/W3039.05
MW-15	657.31	1.85	655.46	N2582.45/W2748.51
MW-16	662.72	1.75	660.97	N1943.65/W3436.02
MW-17	655.03	1.18	653.85	N2173.40/W2908.18
MW-18	660.91	1.97	658.94	N2424.09/W3417.24
MW-19	662.03	1.60	660.43	N2805.45/W2362.58
MW-20	632.33	1.65	630.68	N2338.60/W2063.30
MW-21s	664.02	2.10	661.92	N1144.21/W6672.65
MW-21d	663.60	1.64	661.96	N1133.89/W6674.07
MW-22s	667.47	2.10	665.37	N1234.13/W6404.21
MW-22d	667.21	1.74	665.47	N1244.13/W6402.58
MW-23s	663.18	1.71	661.47	N1671.77/W6674.68
MW-23d	663.41	2.26	661.15	N1663.15/W6674.87
MW-24s	667.88	2.14	665.74	N1004.41/W6059.48
MW-24d	667.75	1.60	666.15	N1004.94/W6049.41
MW-25	667.73	1.93	665.80	N1919.04/W5962.60
MW-26s	665.54	-0.04	665.58	N1154.95/W6199.37
MW-26d	665.59	0.04	665.55	N1166.24/W6197.23
MW-27	667.86	1.93	665.93	N1702.87/W5465.27
MW-28	663.27	1.69	661.58	N2617.27/W3410.09
MW-29s	653.40	1.17	652.23	N1748.97/W3428.31
MW-29d	653.07	1.45	651.62	N1739.00/W3427.40
MW-30	667.58	1.47	666.11	N2403.86/W3651.68
MW-31	661.59	1.94	659.65	N2178.99/W3396.88
MW-32	656.66	1.83	654.83	N2327.12/W3125.37
MW-33s	653.24	1.98	651.26	N1520.86/W2961.58
MW-33d	653.22	2.07	651.15	N1510.68/W2957.58
MW-34s	655.67	1.49	654.18	N2399.10/W2778.80
MW-34d	654.67	0.98	653.69	N2392.30/W2762.44
MW-35	661.90	1.75	660.15	N2674.23/W3122.39
MW-36	655.04	1.76	653.28	N2479.95/W2918.03
MW-37	661.14	1.89	659.25	N2849.87/W2919.21
MW-38	666.64	1.73	664.91	N2947.82/W3145.33
MW-39s	657.30	1.97	655.33	N1958.37/W3010.80
MW-39d	657.18	1.89	655.29	N1965.42/W3010.40
MW-40s	662.22	1.65	660.57	N1614.69/W3852.13

APPENDIX B (CONT.)
ELEVATIONS AND COORDINATES
OF
MONITORING WELLS,SOIL BORINGS,AND SAMPLE COLLECTION POINTS
ORMET CORPORATION
HANNIBAL,OHIO

BORING/WELL OR SAMPLE LOCATION	ELEVATION OF WATER-LEVEL MEASURING PT. (ft. M.S.L.)	STICK-UP OF MEASURING PT. ABOVE GROUND (feet)	ELEVATION OF GROUND SURFACE (ft. M.S.L.)	PLANT COORDINATES
MW-40d	661.95	1.52	660.43	N1609.75/W3852.13
MW-41	637.67	1.83	635.84	N4137.42/W979.64
MW-42s	654.37	1.33	653.04	N1791.35/W3203.89
MW-42d	654.64	1.50	653.14	N1805.97/W3212.15
MW-43s	633.68	1.82	631.86	N1435.46/W3248.30
MW-43d	633.12	1.66	631.46	N1430.56/W3251.54
MW-44s	662.01	1.32	660.69	N1199.64/W3865.77
MW-44d	661.76	1.97	659.79	N1206.30/W3857.67
TH-3	667.81	1.90	665.91	N1320.30/W4012.33
TH-11	659.08	1.74	657.34	N2458.56/W3383.93
TH-15	663.62	0.92	662.70	
TH-16	664.62	1.26	663.36	N875.68/W6630.77
TH-17	663.93	1.89	662.04	N1363.09/W6674.86
OLD INTERCEPTOR (east)	667.30	——		N875.39/W5696.46
OLD INTERCEPTOR (west)	667.46	——		N863.59/W5720.48
RP-1	643.17	——	——	——
RP-2	643.05	——	——	——
SB-001	——	——	655.29	N2342.09/W3297.24
SB-002	——	——	661.98	N2451.16/W3304.69
SB-003	——	——	663.96	N2719.80/W3303.61
SB-004	——	——	664.26	N2906.52/W3304.46
SB-005	——	——	663.61	N2920.25/W3127.64
SB-006	——	——	659.96	N2718.57/W3123.52
SB-007	——	——	655.99	N2518.97/W3107.62
SB-008	——	——	653.80	N2319.28/W3101.26
SB-009	——	——	652.50	N2324.77/W2923.83
SB-010	——	——	653.59	N2525.53/W2926.79
SB-011	——	——	658.12	N2724.30/W2929.55
SB-012	——	——	659.36	N2924.33/W2926.33
SB-013	——	——	656.41	N2944.28/W2743.37
SB-014	——	——	656.26	N2732.10/W2737.27
SB-015	——	——	654.25	N2534.62/W2724.53
SB-016	——	——	653.85	N2325.63/W2777.01
SB-017	——	——	662.91	N2543.35/W3510.04
SB-018	——	——	663.44	N2355.54/W3493.78
SB-019	——	——	664.63	N2156.54/W3517.64
SB-020	——	——	665.39	N2153.18/W3717.50
SB-021	——	——	664.37	N2354.35/W3695.68
SB-022	——	——	666.37	N2509.04/W3728.17
SB-023	——	——	665.28	N2374.80/W3899.03
SB-024	——	——	665.78	N2182.19/W3896.89
PPB-01	663.24	-0.30	663.54	N2424.53/W2373.16
PPB-02s	663.14	0.00	663.14	N2574.95/W2530.64
PPB-02d	662.89	0.14	662.75	N2581.46/W2538.17
PPB-03	——	——	662.86	N2245.18/W2677.19
PPB-04	661.57	0.02	661.55	N1968.11/W2974.78

APPENDIX B (CONT.)
ELEVATIONS AND COORDINATES
OF
MONITORING WELLS,SOIL BORINGS,AND SAMPLE COLLECTION POINTS
ORMET CORPORATION
HANNIBAL,OHIO

BORING/WELL OR SAMPLE LOCATION	ELEVATION OF WATER-LEVEL MEASURING PT. (ft. M.S.L.)	STICK-UP OF MEASURING PT. ABOVE GROUND (feet)	ELEVATION OF GROUND SURFACE (ft. M.S.L.)	PLANT COORDINATES
PPB-05	661.62	0.07	661.55	N1721.48/W2961.61
PPB-06	663.04	-0.01	663.05	N1450.17/W2884.45
PPB-07s	661.71	-0.07	661.78	N1555.84/W2673.56
PPB-07	----	----	661.81	N1550.99/W2648.54
PPB-08	----	----	662.72	N1826.26/W2353.52
PPB-09	664.3	0.00	664.30	N2107.31/W2069.49
PPB-010s	663.62	0.13	663.49	N2279.62/W2207.40
PPB-010	----	----	663.42	N2274.94/W2202.29
PPB-011	----	----	658.63	N1919.90/W3219.74
PPB-012	----	----	652.43	N1655.29/W3211.89
PPB-013	----	----	652.99	N1827.95/W3016.05
PPB-014	660.64	1.35	659.29	N2000.89/W3393.77
PPB-015	----	----	658.54	N2050.38/W3055.75
PPB-016	-----	-----	658.45	N2196.43/W3237.42
PPB-017	-----	-----	658.78	N1853.12/W3537.48
PPB-018	-----	-----	662.76	N1851.23/W3723.71
PPB-019	-----	-----	658.20	N1593.64/W3746.65
PPB-020	-----	-----	657.07	N1593.85/W3539.27
RAB-01	-----	-----	656.64	N2615.76/W2335.09
RAB-02	-----	-----	627.49	N2582.42/W2184.89
RAB-03	-----	-----	627.49	N2636.59/W2150.44
AM-1	-----	-----	-----	N2836.74/W2644.51
AM-2	-----	-----	-----	N1978.13/W2416.89
AM-3	-----	-----	-----	N1365.77/W3855.04
AM-4	-----	-----	-----	N2016.15/W3580.82
SEEP-1	-----	-----	625.37	N2595.33/W2205.95
SEEP-2	-----	-----	628.59	N1381.51/W3182.72
SEEP-3	-----	-----	628.18	N1125.77/W3402.04
SEEP 4	-----	-----	626.76	N2559.12/W2204.47
SEEP-5	-----	-----	629.24	N1341.56/W3165.33
SEEP-6	-----	-----	629.89	N1285.33/W3212.30
SEEP-7	-----	-----	630.11	N1215.59/W3257.32
CONDUIT	-----	-----	640.21	N1982.10/W2067.48
RS-2	-----	-----	-----	N1956.55/W2157.95
RS-3	-----	-----	-----	N1480.41/W2640.64
RS-4	-----	-----	-----	N1082.89/W3233.52
RSII-1A	-----	-----	-----	N2772/W1249
RSII-1B	-----	-----	-----	N2714/W1233
RSII-2	-----	-----	-----	N1846/W2064
RSII-3	-----	-----	-----	N1321/W2542
RSII-4	-----	-----	-----	N998/W3225
RSII-6	-----	-----	-----	N890/W3463
RSII-7	-----	-----	-----	N804/W3435
RSII-8	-----	-----	-----	N764/W3143
RSII-9	-----	-----	-----	N843/W3704
RSII-11	-----	-----	-----	N646/W3727
RSII-12	-----	-----	-----	N778/W3863
CMSD-1	-----	-----	-----	N1463.16/W3065.48
CMSD-2	-----	-----	-----	N1373.14/W2924.03
CMSD-3	-----	-----	-----	N1268.79/W3021.39
CMSD-4	-----	-----	-----	N1114.77/W3330.78

APPENDIX C

DESCRIPTIONS OF REMEDIAL INVESTIGATION FIELD METHODOLOGIES

ORMET CORPORATION
HANNIBAL, OHIO

APPENDIX C-1	Disposal Pond Solids Sampling Methodology
APPENDIX C-2	Former Spent Potliner Storage Area Soil Boring Methodology
APPENDIX C-3	Seep and Conduit Sampling Methodology
APPENDIX C-4	Former Construction Material Scrap Dump Test Pit Methodology
APPENDIX C-5	Carbon Runoff and Deposition Area Sampling Methodology
APPENDIX C-6	River Sediment and Surface-Water Sampling Methodology
APPENDIX C-7	Drilling and Monitoring Well Installation Methodology

APPENDIX C-1

DISPOSAL POND SOLIDS SAMPLING METHODOLOGY

ORMET CORPORATION
HANNIBAL, OHIO

APPENDIX C-1

DISPOSAL POND SOLIDS SAMPLING METHODOLOGY

In any given pond or pond section, the samples from the pond surface at each designated location were collected first, using a hand augering device equipped with a three-inch-diameter stainless steel collection barrel. The individual samples (approximately one liter each) were removed from the collection barrel using a stainless steel spoon, and retained in a stainless steel compositing container equipped with a stainless steel lid to prevent possible cross-contamination via airborne particulates. After each of the surface samples had been collected within a given pond or pond section, they were composited in the stainless steel container by stirring with a stainless steel spoon. The bucket auger, compositing container, and spoon were washed with a Sparkleen soap solution and rinsed with clean water between each individual sample location. Following collection of all of the individual sludge samples from a given depth within a particular pond or pond section, the sample collection device was pressure washed with a Sparkleen soap solution before being used to gather samples from the next sampling interval.

Once all of the surface samples where collected within a given pond or pond section, each sample hole was extended down to the next sampling interval using the bucket auger. Samples from below the pond surfaces were then collected utilizing a liquid sludge sampling device developed specifically for the Ormet pond solids sampling program. As with the surface samples, all of the individual samples from a given sampling interval in a particular pond or pond section (e.g., 5-7, 10-12, 15-17, 20-22, sludge/soil interface) were retained in a stainless steel container and then composited prior to being put into sample jars.

The device used to collect sludge samples from specific depths within the former disposal ponds consisted of 5-foot long sections of 1½-inch inside diameter, threaded, schedule 80 PVC pipe; a three-foot long, 1½-inch inside diameter, stainless steel sample collection barrel, and an inner plunger assembly (see Figure C-1-1). Prior to sampling at each location, a clean sample collection barrel was attached to the assembly. The sample barrels were cleaned using a Sparkleen soap solution, followed by a tap water rinse and a deionized water rinse.

With the sampling device assembled as shown in Figure 1, the sampler was driven (or pushed) to the to of the desired sampling interval, with additional sections of PVC and plunger rod being added as necessary. The lower gasket assembly prevented sludge from entering the collection barrel while the device was being advances.

Once the top of the sampling interval was reached, one of two sample collection procedures was used, depending upon the consistency of the sludge. If the sludge appeared relatively cohesive or firm, the inner plunger assembly was pulled back until the lower gasket assembly was at the top of the sample collection barrel. An appropriate section of PVC with a top cap was added to the top of the assembly and the device was driven or pushed through the sampling interval, with the top cap serving the prevent the plunger assembly from rising farther in the PVC column (see Figure C-1-2). To prevent the plunger assembly from sliding back down and extruding the sample while the sampler was being pulled from the hole, the top PVC section was removed and a pair of vice grip plyers was clamped onto the inner rod just above the PVC. Once the sampling device had been pulled from the hole, the plunger assembly was used to force the sample out of the sample barrel and into the sample holding container.

If the sludge at the depth to be samples appeared to be relatively fluid, the top section of PVC was removed and the inner plunger assembly was pushed down, so that the lower gasket was pushed

out of the end of the sample collection barrel a short distance thus opening the barrel for sample intake (see Figure C-1-3). The sampling device was then pushed down through the sampling interval, allowing the relatively fluid sludge to flow up into the collection barrel. The plunger assembly was then retracted to trap the sample in the barrel and the sampler was removed from the hole.

Between sampling locations, the various components of the sludge sampler were washed, using a power washer and brush, with Sparkleen solution and rinsed with tap and deionized water.

The filled sample containers were labeled to indicate the sample I.D. numbers, data, sampling personnel, and the project name and number. All samples were shipped to Kemron using the chain-of-custody procedures described in the approved Phase I RI Work Plan.

APPENDIX C-2

FORMER SPENT POTLINER STORAGE AREA SOIL BORING METHODOLOGY

ORMET CORPORATION
HANNIBAL, OHIO

APPENDIX C-2

FORMER SPENT POTLINER STORAGE AREA SOIL SAMPLING PROCEDURES

The drilling and soil sampling procedures described in this section apply to the borings which were drilled during the soil boring program conducted in the former spent potliner storage area during Phase I of the RI. On a daily basis, the G&M field geologist maintained a drilling checklist shown in (Figure C-2-1) which lists conditions to be met prior to drilling.

Prior to initiating the soil boring program, all drilling equipment (e.g., drill rig, rods, augers, tools, etc.) was steam cleaned at a specially constructed washdown area, using a Sparkleen solution and then rinsed with tap water. The initial steam cleaning was performed to avoid possible cross contamination related to the previous site on which the equipment was used. All washdown water was collected in a sump and pumped to a holding tank.

Each soil boring was advanced to a depth of ten feet via hollow-stem auger (HSA) drilling, using augers with a inside diameter of 4 1/2 inches. In each boring, soil samples were collected continuously to the target depth using a 2-foot-long split spoon sampling device.

After removing then opening each split spoon, it was scanned with an organic vapor analyzer then inspected and described for gross composition, texture, relative degree of saturation, and other observable properties, following standardized G&M procedures. This information was then recorded using a standard form for logging soil samples (see Figure C-2-2).

After the sample had been described, it was placed in a glass container and mixed to form a composite. Because certain soil samples would be selected for full CLP analyses based on the results

of the initial analyses for indicator parameters, the composite was split to obtain two samples from each interval. The split samples were placed into the appropriate containers provided by the laboratory. The sample containers were then labelled to indicate the boring number, sampling interval, date, time, and sampling personnel, prior to being stored in a cooler at approximately 4°C. At the end of each day, the soil samples were shipped to Kemron following the chain-of-custody procedures described in the approved Phase I RI Work Plan.

A multi-step washing procedure was used to clean the split-spoons and other sampling equipment to reduce the risk of cross-contaminating samples. The spoon was first washed in a solution of Sparkleen soap, followed by a rinse in clean tap water, then a deionized water rinse. Both the wash water and the rinse water were collected in buckets and then transferred to the container used to collect the drilling rig washdown water.

Following the completion of each boring, the borehole was backfilled with thick bentonite slurry to within approximately two (2) feet of land surface. To reduce the potential for creating void spaces in the column of bentonite, a tremmie line as used to install the slurry. After the remaining two feet were filled up to the ground surface with neat cement, a wooden stake was marked with the boring number, total depth, and date and inserted into the cement.

Between boring locations, the augers, drilling rods, split spoons, etc. were steam cleaned as described previously.

Samples for chemical analyses were transported to the lab by a courier supplied by the lab. Throughout the sample transfer process the chain-of-custody procedures described in the approved Phase I RI Work Plan were followed.

Figure C-2-1

GERAGHTY & MILLER, INC.
Ground-Water Consultants

SAMPLING OF MONITORING WELLS DAILY CHECKLIST

PROJECT: _____ WELL(S): _____

LOCATION: _____ DATE: _____

G&M PERSONNEL ON SITE: _____ TIME: _____

CHECKED BY: _____

ITEMS	OK/NA	COMMENTS
PRIOR TO DRILLING: Health & safety precautions (HASP) received; equipment ready.		
Sample containers, coolers, received from laboratory; ice or ice packs ready.		
Sampling equipment and supplies inventoried, clean and operational.		
Check in with client at site.		
Integrity of well noted.		
Well area prepared for sampling; plastic placed around well; gasoline-powered pumps placed downwind.		
Well and water-level measurements made and recorded along with other pertinent field information on water sampling log.		
Field instruments calibrated.		
Sample containers labelled; preservatives added, if necessary.		
DURING AND AFTER SAMPLING: Well purged three to five times its volume.		
Sample collected using a bailer or pump as per sampling plan.		
Measurement of field parameters recorded on sampling log.		
Sample containers filled according to collection protocol of analyses.		
Field and trip blanks collected; replicates or split samples collected as per sampling plan.		
Samples stored at 4°C in coolers for transport to lab.		
Water sampling log and chain-of-custody form completed.		
Reusable equipment decontaminated; non-reusable equipment disposed of in appropriate manner.		
Well secured and locked.		
Laboratory contacted to confirm receipt and condition of samples.		

Additional Comments:

Instructions: Original to Field Project File; copy to Project Manager and to QA Representative.

Figure C-2-2 Standard G&M Sample/Core Log

GERAGHTY & MILLER, INC.
Environmental Services

SAMPLE/CORE LOG

Boring/Well_____ Project/No. _____ Page_____ of_____

Site Location _____ Drilling Started_____ Drilling Completed _____

Total Depth Drilled _____feet Hole Diameter_____inches Type of Sample/ Coring Device _____

Length and Diameter of Coring Device _____ Sampling Interval _____feet

Land-Surface Elev._____feet ☐ Surveyed ☐ Estimated Datum_____

Drilling Fluid Used _____ Drilling Method_____

Drilling Contractor _____ Driller_____ Helper_____

Prepared By _____ Hammer Weight _____ Hammer Drop _____inches

Sample/Core Depth (feet below land surface) From	To	Core Recovery (feet)	Time/Hydraulic Pressure or Blows per 6 inches	Sample/Core Description

Figure C-2-2 (continued)

GERAGHTY & MILLER, INC.
Environmental Services

SAMPLE/CORE LOG (Cont.d)

Boring/Well_____ Page_____ of_____

Prepared By_____

Sample/Core Depth (feet below land surface) From	To	Core Recovery (feet)	Time/Hydraulic Pressure or Blows per 6 inches	Sample/Core Description

G&M Form 04 4-89

Southprint 89-0910

APPENDIX C-3

SEEP AND CONDUIT SAMPLING METHODOLOGY

ORMET CORPORATION
HANNIBAL, OHIO

APPENDIX C-3

SEEP AND CONDUIT SAMPLING METHODOLOGY

Because the seeps near the ballfield and along the base of the CMSD do not yield adequate flow for direct grab sampling, a small reservoir was dug at the mouth of each seep to provide a sample collection point. The reservoir was constructed to allow sufficient flow through to prevent water in the reservoir from stagnating. The shovel used to create the reservoir wash washed with a Sparkleen soap solution and rinsed with deionized water prior to use at each location. To allow suspended sediments that resulted from the reservoir construction to settle out, the seeps were left undistributed for at least several hours prior to sample collection. To prevent possible cross-contamination by airborne particulate matter, the reservoir was covered with plastic until the time it was sampled.

Samples were collected from the seeps using a peristaltic pump. Prior to sample collection, the pump was used to evacuate the seep reservoir for at least five minutes. During sample collection, the intake for the pump was inserted into the middle of the reservoir to a depth approximately midway between the water surface and the reservoir bottom. The intake and discharge line for the pump was replaced prior to sampling at each seep.

All sample containers, accept those for metals analyses, were filled directly from the discharge of the peristaltic pump. The sample for metals analyses was collected in a holding container and then filtered prior to being placed in the laboratory sample container. If limited seep flow resulted in an extended sampling period at any given seep, filled and partially filled sample containers were kept on ice in a cooler chest until adequate sample volume was collected.

Samples from the steel conduit were collected by standard grab sampling techniques at the end of the pipe.

Filtering and preservation techniques, for the seep and conduit samples, were similar to those applied to the ground-water samples, as outlined and approved in the Phase I RI work plan. Standard forms for logging water-sampling data and results of field analyses; procedures for conducting field analyses, recording field data, and labeling of samples; and chain-of-custody procedures were in accordance with those outlined in the Phase I RI work plan.

APPENDIX C-4

FORMER CONSTRUCTION MATERIAL SCRAP DUMP TEST PIT METHODOLOGY

ORMET CORPORATION
HANNIBAL, OHIO

APPENDIX C-4

FORMER CONSTRUCTION MATERIAL SCRAP DUMP TEST PIT METHODOLOGY

The procedures described in this appendix apply to the test pits which were excavated in the former construction material scrap dump during the Phase II RI.

Using a track mounted backhoe, material was removed from each pit in approximately two-foot lifts, down to a target depth of 15 feet. The last lift was a three-foot lift from 12 to 15 feet. The material from each lift was spread next to the pit, photographed, and described in a field notebook.

A grab sample was also collected from each lift, using a stainless steel spoon, and placed in a stainless steel holding container equipped with a lid. During the sampling, an effort was made to collect mainly soil or soil-like material. Larger objects and pieces of debris (e.g., large brick fragments, wood, rubber, metal, etc.) were not collected in the sample. Once the test pit was completed and an individual sample had been collected from each lift and placed in the holding container, the samples were composited and the laboratory sample containers filled.

Only the sample for VOC analysis was not a composite. As specified in the approved Phase II RI Work Plan, the sample for VOC analysis was an individual grab sample. The interval for VOC sampling was determined in the field based on visual inspection of the materials in the excavation. This sample was collected from one of the lifts in the 6 - to 12-foot depth range.

Following completion, each test pit was backfilled with the material removed during excavation. The test pits were marked with flagging tape so that they could be accurately surveyed

and located on the site base maps. The stainless steel holding container and the compositing spoon were cleaned between test pit locations using a multi-step procedure to reduce the risk of cross contamination samples. The equipment was first washed in a solution of Sparkleen soap, followed by a rinse in clean tap water, then a distilled water rinse. Both the wash water and the rinse water were collected in buckets and then transferred to the container used to collect the drilling rig washdown water.

The sample packaging, labeling, and chain-of-custody procedures for the test pit samples were as specified in the approved Phase II RI Work Plan.

APPENDIX C-5

CARBON RUNOFF AND DEPOSITION AREA SAMPLING METHODOLOGY

ORMET CORPORATION
HANNIBAL, OHIO

APPENDIX C-5

CARBON RUNOFF AND DEPOSITION AREA SAMPLING METHODOLOGY

The procedures described in this section apply to the shallow hand borings which were completed during the characterization and sampling of the carbon runoff and deposition area. Initially, a shallow hand boring was completed at the nodes of a 50 by 50 grid sections which had been laid out over the area using a Brunton compass and a 300-foot nylon surveyor's tape. These borings were performed using a stainless steel push tube sampler and/or a bucket auger with a stainless steel sample barrel. Where carbon was encountered, the boring was advanced to the top of natural soil to determine the thickness of the carbon material.

The soil samples were removed, inspected, and described in the field for gross composition, texture, thickness of carbon material, depth to carbon/soil contact and other observable physical properties. A composite sample of the soil material encountered was retained in a plastic bag for possible future inspection. The bag was labeled to indicate the sample depth interval, grid-mark designation, date of collection, and the name of the field geologist. Each of the sampling locations were marked with a pin flag identifying the grid-mark designation and the date.

Upon completion of the grid sampling program, samples of carbon material and underlying soil were collected from two locations in each of the three main areas of carbon deposition identified by USEPA and OEPA. The carbon material at each location was sampled from a depth just above the contact with underlying soil. This was done to provide a sample that had been subjected to less extensive leaching than near-surface materials. In order to avoid over coring and possible cross-contamination during the collection of the carbon material and underlying soil, the depth from which the sample was collected was predetermined by conducting a preliminary boring to determine the

depth to natural soils. The sample of the carbon material and underlying soil was collected using a hand augering device equipped with a three-inch-diameter, stainless steel collection barrel. Prior to collecting each sample, the sampling device was cleaned with a Sparkleen solution and rinsed with tap water then with deionized water.

Because sampling of the underlying soil through the same borehole from which the sample of carbon material was collected could potentially cross-contaminate the soil sample, an area several feet across was excavated (with a hand shovel) down to and slightly below the contact with the underlying soil. This provided direct access to the underlying soil and prevented loose carbon material from falling into the hole from which the sample was collected. The hand auger sampling device was then cleaned as indicated above and used to advance the borehole until natural soil was encountered that was free of particle carbon which may have migrated downward from the overlying deposits. This determination was made by the G&M field geologist, based on visual inspection of the soils. The handauger was then recleaned and lowered into the pilot hole to collect a soil-sample which was submitted for laboratory analysis. This soil was composited in a stainless steel bowl before being placed into the appropriate lab containers. A conceptual depiction of the sampling procedure is provided in (Figure C-5-1).

The equipment used to composite the sample underwent a multi-step washdown to reduce the risk of cross-contaminating samples. After removing any excess sample, the equipment was washed in a solution of Sparkleen soap, followed by a rinse in deionized water. Both the wash water and the rinse water were collected in buckets and then transferred to the containers used to store the drilling rig and auger washdown water.

The sample of carbon material and the sample of underlying soil were placed directly into the appropriate sample container and packaged tightly to minimize air space and the potential for

degassing. The sample jars were labeled to show the sample identification number, date, depth of collection, and the name(s) of sampling personnel and then kept in a cooler chest and chilled to approximately 4°C following collection. At the time of sampling, a diagram was prepared indicating the location from which the sample was taken and a wooden stake was driven at the sample collection point and labeled with the sample numbers and date of collection. The cored hole into the underlying soil was backfilled with bentonite powder and any excess carbon material removed during the sample collection procedure was tamped backed into the hand dug excavation. Following completion of the sampling, the samples were forwarded to the approved laboratory using the standard chain-of-custody procedures.

APPENDIX C-6

RIVER SEDIMENT AND SURFACE-WATER SAMPLING METHODOLOGY

ORMET CORPORATION
HANNIBAL, OHIO

APPENDIX C-6

RIVER SEDIMENT AND SURFACE-WATER SAMPLING METHODOLOGY

River Sediment Sampling

Samples of bottom sediment from the Ohio River were collected using a bucket auger equipped with a stainless steel sample collection barrel. Prior to use at each sampling location, the auger was cleaned with a Sparkleen soap solution, then rinsed with tap water and deionized water.

At locations in and immediately downriver from the outfall 004 backwater area, the samples were collected by wading to the desired location. Sampling locations in the main river channel were accessed from a boat. In all cases, the samples were collected upstream from the sampling personnel or the boat to prevent disturbance of the sediment.

At each location, the samples were collected from approximately the upper one foot of the river bottom. To provide adequate sample volume to fill the sample containers, several individual samples were collected at each location and composited in a stainless steel bowl.

During Phase I, the river sediment sampling locations were plotted on a base map using obvious landmarks, or using a point on the adjacent river bank that was surveyed by a licensed surveyor. During Phase II, the sampling locations were surveyed by a licensed surveyor while the samples were being collected.

The river sediment samples were packaged and shipped to Kemron according to procedures described in the approved Phase I RI Work Plan.

Surface-Water Sampling

Surface-water samples were collected from shore or by wading using a Teflon bailer. The bailer was cleaned prior to each sampling location using a Sparkleen soap solution and a deionized water rinse. In collecting the samples, the bailer was lowered from the surface of the water to a depth nearly equal to the length of the bailer. The sample containers, except for the container for dissolved metals analyses, were filled directly from the bailer. Where more than one sample container was supplied for a particular analysis or where a duplicate sample was being collected, the contents of the bailer was approximately split between the containers. This was repeated until the containers were filled. Surface water for dissolved metals analyses was poured into a clean holding beaker and then filtered prior to being put into the laboratory sample container.

Procedures for measuring field parameters (pH, temperature, and specific conductance), preserving and packaging the samples, and maintaining chain-of-custody were as specified in the approved Phase I RI Work Plan.

APPENDIX C-7

DRILLING AND MONITORING WELL INSTALLATION METHODOLOGY

ORMET CORPORATION
HANNIBAL, OHIO

APPENDIX C-7

DRILLING AND MONITORING WELL INSTALLATION METHODOLOGY

The procedures described in this appendix apply to the recreation area soil boring program, the pond perimeter soil boring and piezometer installation program, and the monitoring well installation program.

Prior to drilling at each boring or monitoring well location, the drilling rig and equipment were washed down at a specially constructed area. The equipment was steam cleaned using a Sparkleen soap solution and then tap water. Runoff from the washdown process was collected in a sump and pumped to a holding tank.

All drilling at the Ormet site was performed using the hollow-stem auger (HSA) method with split-spoon soil sampling. In the plant recreation area borings and the pond perimeter borings, split-spoon samples were collected continuously to the target depth of the boring. In the monitoring well boreholes, split-spoon samples were collected at regular 5-foot intervals down to the top of bedrock.

Upon opening each split spoon, the soil sample was scanned with an OVA and described for gross composition, texture, color, relative degree of saturation, and other observable properties. This information was then recorded on a standard form for logging soil samples (See Figure 2-2-2). A composite sample from each split-spoon was retained in a ½ pint glass jar with a water-tight lid. The jar was labeled to indicate the project number, boring location, depth interval, split-spoon blow counts, data of collection, and the name of the field geologist. Figure C-7-1 shows the label that was affixed to each sample jar. This information was also written on the lid of the sample jar using a waterproof marking pen.

After each sampling interval, the split spoon device underwent a multi-step washdown. First, the split spoon was brushed with a dry brush to remove the bulk of any remaining soil. The spoon was then washed in a solution of Sparkleen soap, followed by a rinse in clean tap water, then a deionized water rinse. Both the wash water and the rinse water were collected in buckets and then transferred to the holding tank at the drilling-equipment washdown area.

Boreholes that were not equipped with monitoring wells or piezometers were backfilled with thick bentonite slurry (via tremmie pipe) and capped with a two-foot thick cement plug. A wooden stake was placed in the cement plug and labeled to indicate the boring number, date, and total depth. All boring locations were surveyed by a licensed surveyor to determine there lateral location and land surface elevation.

At locations where monitoring wells and piezometers were installed, the assemblies were installed following the procedures described in the approved Phase I RI Work Plan. Location-specific well/piezometer construction data were recorded on a well construction log (Figure C-7-2).

During the drilling and installation of several monitoring wells, flowing sand was encountered below the water table, both while advancing the borehole and while installing the well assembly. When flowing sand was encountered during drilling, one of two procedures was utilized to collect split-spoon samples from the desired interval, depending upon the amount of sand that had flowed into the augers. If less than about 2 feet of sand was found to be in the augers (as measured with a steel tape) when a sample was to be taken, two 2-foot-long split spoons were screwed together and driven through the sand in the augers and then the additional two feet required for the sample. This resulted in somewhat elevated blow counts, but did provide an adequate volume of sample from the desired interval for physical characterization.

If more than about 2 feet of sand was found to be in the augers, a roller bit was utilized with clean water from the drilling water source to clean out the sand down to the desired sampling interval. On one occasion, the sand flowed back into the augers as the roller bit was pulled back. As a result, that sampling interval had to be omitted. Due to the generally homogeneous character of the aquifer materials beneath the site, deletion of this sample is not expected to affect the overall characterization of the subsurface geology.

During the installation of monitoring well MW-42D, sand flowed into the annular space between the augers and the PVC well, locking the well assembly inside the augers. To free the well assembly, a combination of techniques was used. First, to add weight to the PVC well assembly, the drilling rods were carefully inserted into the well and rested on the well bottom. Initially, this was sufficient to allow the augers to be pulled back from around the well. However, flowing sand eventually locked the well assembly inside the augers again. At this point, a tremmie pipe was lowered through the annular space down to the blockage. Clean water was then jetted into the borehole, successfully washing out the sand. Throughout the drilling and well installation process, an estimate was kept of the amount of water being used. A volume of water greater than the amount introduced during well installation was then removed from the well development.

Installation of the bentonite pellet seal on top of the formation collapse in MW-42D also proved to be a problem. When installed below the water table, the bentonite pellets bridged together and began to hydrate between the augers and the well assembly. As a result, when the augers were pulled back from above the formation collapse, the pellets did not drop out of the annular space and into place on top of the formation collapse. Instead, they formed a plug between the augers and the PVC pipe.

In an attempt to force the plug out of the augers, the annular space was filled with thick bentonite slurry. However, the weight of the column of slurry was not sufficient to push the plug out. Finally, the drilling rods were removed from inside the well (where they were being used to hold the well assembly in place) and lowered into the space between the augers and the well. This was successful in either pushing the plug our or putting holes through it, as was evident when the column of slurry being held in the augers drained out. The remainder of the installation of MW-42D, as well as the drilling and installation of the remaining monitoring wells was according to standard procedures.

Due to the difficulties encountered in placing the bentonite pellet seal below the water table in MW-42D, the construction of subsequent monitoring wells that required placing such a seal below the water table was modified. Instead of placing the bentonite pellet seal at the top of the formation collapse, the seal was omitted and thick bentonite slurry was installed from the top of the sand pack up to within 4-5 feet of land surface via tremmie pipe. The omission of the pellet seal should not affect the integrity of the monitoring wells, as the remainder of the borehole was backfilled with bentonite slurry.

In instances where the bentonite pellet seal was situated above the water table (e.g., in the shallow well of a two-well cluster), the seal was installed according to standard procedures.

After installation, the monitoring wells were surveyed by a licensed surveyor to determine their lateral location and the elevation of the top of the PVC casing to within 0.01-foot precision.

All of the newly installed monitoring wells were developed to remove fine materials (e.g., silt and clay) introduced during the drilling and well installation process. Development was accomplish by a combination of hand bailing and pumping using an airlift system. The wells were developed

until they yielded sediment-free water, to the extent practical. If water was introduced to the borehole or well during the drilling or well installation process, at least that amount of water was removed during development. To ensure proper development, water being removed from the wells was periodically monitored for pH, temperature, and conductance. Relative equilibration of these parameters was considered to be an additional indicator of adequate well development.

GERAGHTY & MILLER, INC.
Environmental Services

FIGURE C-7-2

WELL CONSTRUCTION LOG
(UNCONSOLIDATED)

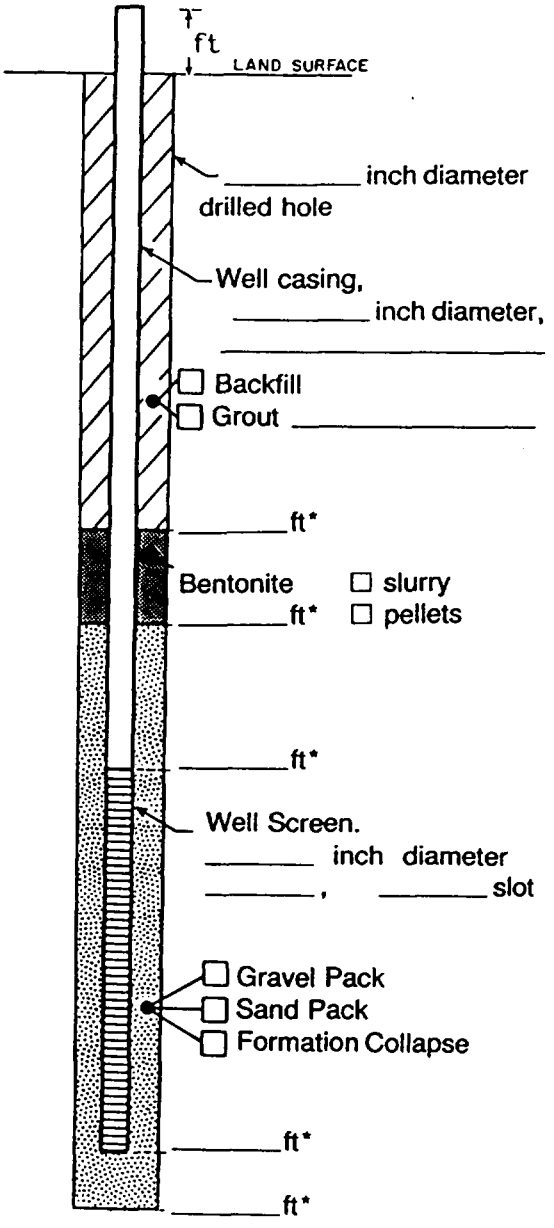

Measuring Point is
Top of Well Casing
Unless Otherwise Noted.

*Depth Below Land Surface

Project _____ Well _____

Town/City _____

County _____ State _____

Permit No. _____

Land-Surface Elevation

and Datum _____ feet ☐ Surveyed

_____ ☐ Estimated

Installation Date(s) _____

Drilling Method _____

Drilling Contractor _____

Drilling Fluid _____

_____

Development Technique(s) and Date(s)

_____

_____

_____

Fluid Loss During Drilling _____ gallons

Water Removed During Development _____ gallons

Static Depth to Water _____ feet below M.P.

Pumping Depth to Water _____ feet below M.P.

Pumping Duration _____ hours

Yield _____ gpm Date _____

Specific Capacity _____ gpm/ft

Well Purpose _____

_____

_____

Remarks _____

_____

_____

_____

_____

_____

Prepared by _____

GERAGHTY & MILLER, INC.

Project # _____

Client Name _____

Boring # _____

Sample # _____

Depth _____

Blows / / /

Recovery _____

Date _____

FIGURE C-7-1. Label used to identify soil samples from soil borings and Monitoring well boreholes.

Ormet Corporation,
Hannibal, Ohio

APPENDIX D

RESULTS OF DOUBLE-RING INFILTROMETER TESTING OF DISPOSAL POND SURFACES

ORMET CORPORATION
HANNIBAL, OHIO

DOUBLE RING INFILTROMETER TEST DATA SHEET

TEST LOCATION: Ormet Corporation Disposal Pond #1 DATE: 8/10/88
START TIME: 9:12 END TIME: 15:42
WATER SOURCE: Ormet Corporation Recreation Area Well pH: 7.40
DEPTH OF WATER: 3 inches

		OUTER RING		INNER RING	
ELAPSED TIME (minutes)	WATER TEMP (Deg. C)	WATER VOLUME (ml)	INFILTRATION RATE (in./hour)	WATER VOLUME (ml)	INFILTRATION RATE (in./hour)
15	25	730	.52	0	0
30	25	315	.22	10	.02
45	25	485	.349	60	.12
60	27	350	.25	20	.04
90	28	800	.28	0	0
120	29	450	.162	70	.07
150	30	660	.238	144	.16
180	31.5	560	.20	5	.005
210	32.5	455	.16	28	.03
240	33	415	.14	12	.012
270	34	750	.27	30	.032
300	35	380	.137	6	.006
330	36	328	.118	64	.069
360		512	.181	48	.052

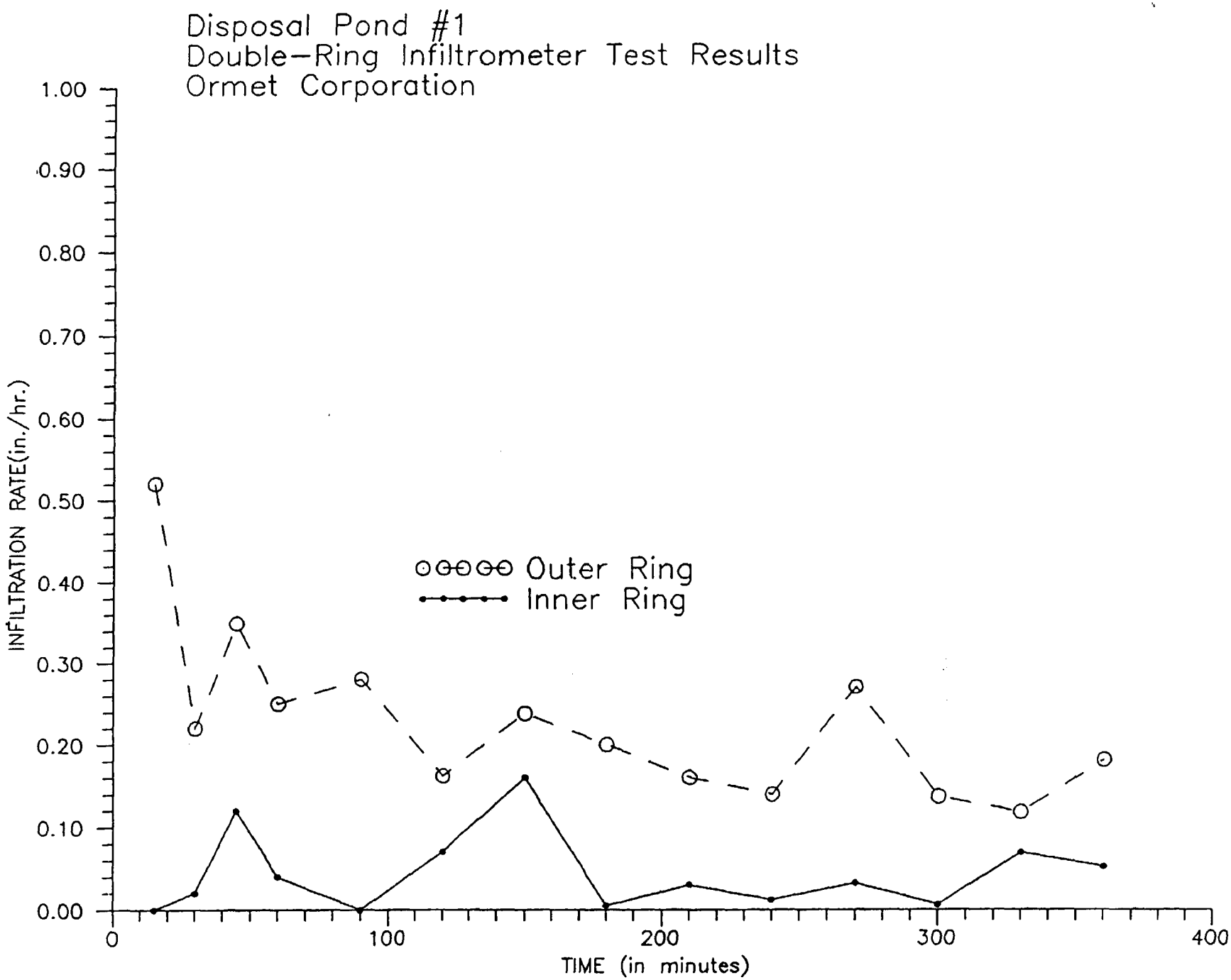
Disposal Pond #1
Double-Ring Infiltrometer Test Results
Ormet Corporation
INFILTRATION RATE(in./hr.)
1.00
0.90
0.80
0.70
0.60
0.50
0.40
0.30
0.20
0.10
0.00
0
100
200
300
400
TIME (in minutes)
Outer Ring
Inner Ring

DOUBLE RING INFILTROMETER TEST DATA SHEET

TEST LOCATION: Ormet Corporation Disposal Pond #2 DATE: 8/11/88
START TIME: 9:26 END TIME: 15:26
WATER SOURCE: Ormet Corporation Recreation Area Well pH: 7.55
DEPTH OF WATER: 3 inches

		OUTER RING		INNER RING	
ELAPSED TIME (minutes)	WATER TEMP (Deg. C)	WATER VOLUME (ml)	INFILTRATION RATE (in./hour)	WATER VOLUME (ml)	INFILTRATION RATE (in./hour)
15	25	1730	1.24	540	1.16
30	25	1700	1.22	640	1.37
45	25	1230	.88	600	1.29
60	26	1410	1.01	530	1.14
90	26.5	3090	1.11	965	1.038
120	26.5	3080	1.108	1005	1.08
150	27	2090	.75	960	1.03
180	27.5	2250	.81	940	1.012
210	28	3080	1.108	970	1.04
240	29	3470	1.249	940	1.012
270	29	3350	1.20	980	1.055
300	30	3260	1.17	930	1.00
330	30	3750	1.35	710	.76
360	32	3520	1.26	680	.732

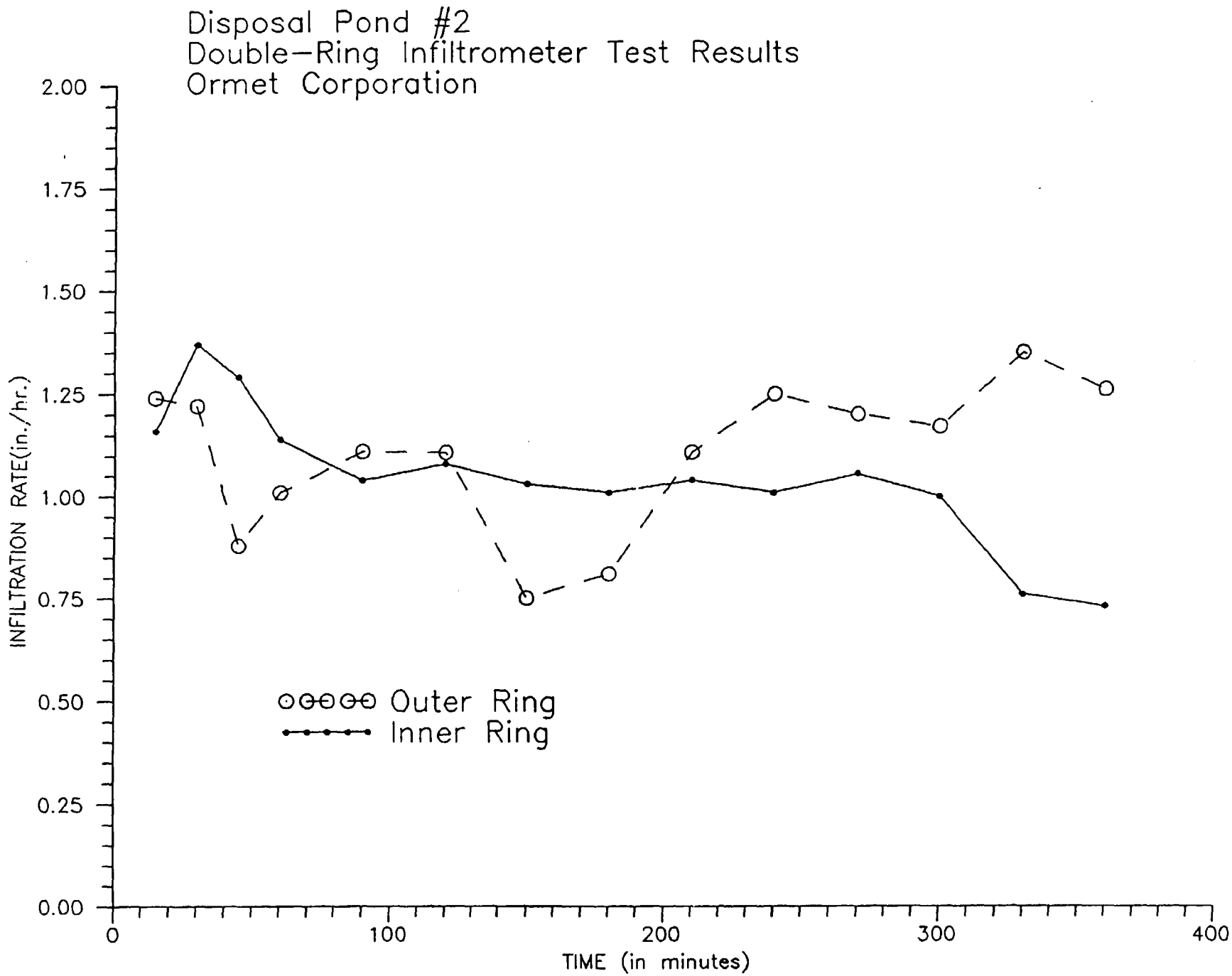
Disposal Pond #2
Double-Ring Infiltrometer Test Results
Ormet Corporation
INFILTRATION RATE(in./hr.)
2.00
1.75
1.50
1.25
1.00
0.75
0.50
0.25
0.00
0
100
200
300
400
TIME (in minutes)
Outer Ring
Inner Ring

DOUBLE RING INFILTROMETER TEST DATA SHEET

TEST LOCATION: Ormet Corporation Disposal Pond #3 DATE: 8/16/88
START TIME: 8:00 END TIME: 12:00
WATER SOURCE: Ormet Corporation Recreation Area Well pH: 7.34
DEPTH OF WATER: 3 inches

		OUTER RING		INNER RING	
ELAPSED TIME (minutes)	WATER TEMP (Deg. C)	WATER VOLUME (ml)	INFILTRATION RATE (in./hour)	WATER VOLUME (ml)	INFILTRATION RATE (in./hour)
15	20	2640	1.90	910	1.95
30		2050	1.476	560	1.205
45		1490	1.073	380	.818
60		1750	1.26	440	.947
75		1530	1.102	390	.839
90	21	1610	1.159	380	.818
105		1330	.957	400	.861
120	22	810	.583	380	.818
135	22	890	.641	400	.861
150	22	880	.634	360	.775
165	23	860	.619	380	.818
180		870	.626	400	.861
195		880	.619	390	.839
210		1580	1.13	350	.754
225		1150	.823	370	.796
240	25	1290	.928	370	.796

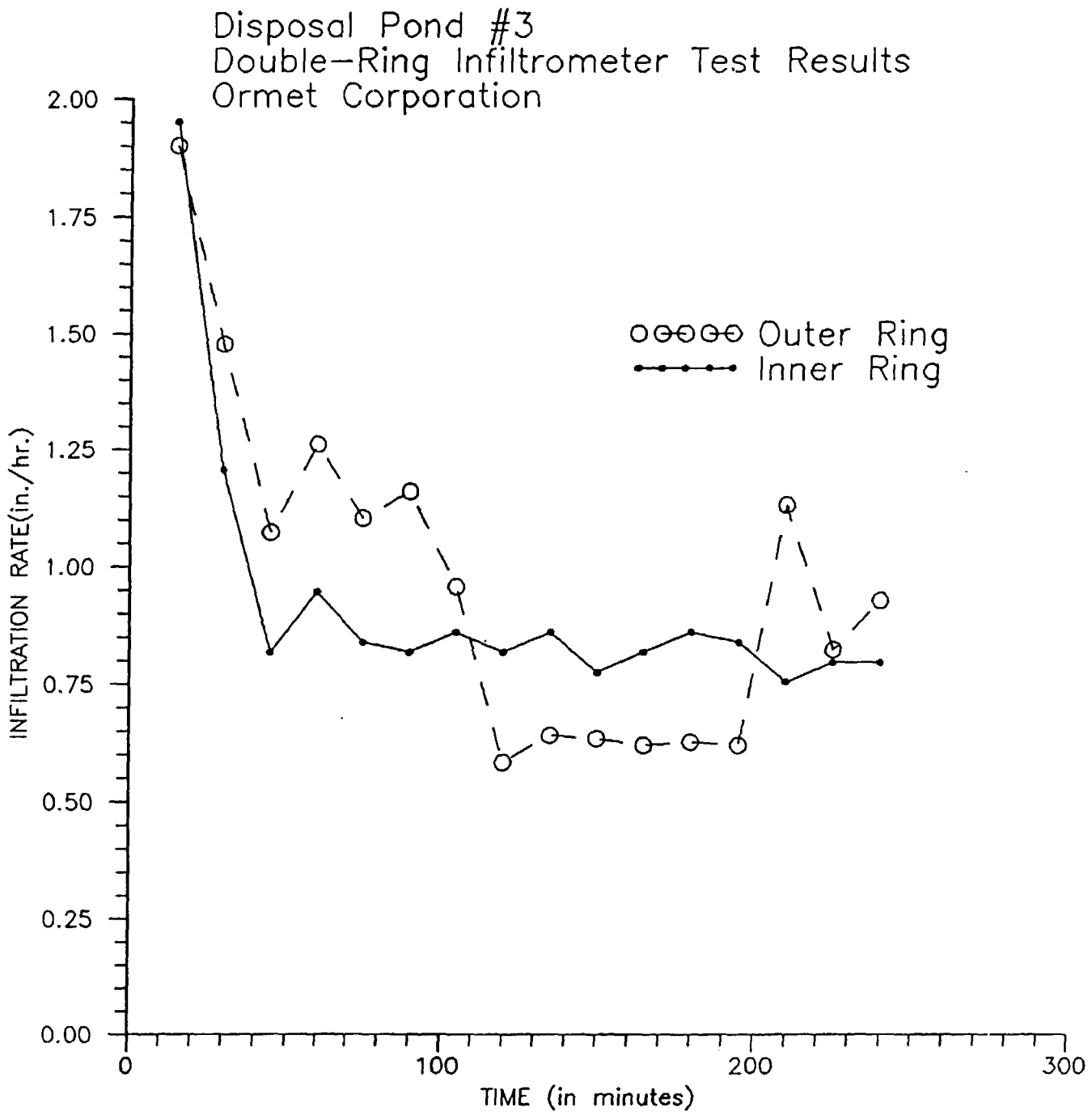
Disposal Pond #3
Double-Ring Infiltrometer Test Results
Ormet Corporation
Outer Ring
Inner Ring
INFILTRATION RATE(in./hr.)
2.00
1.75
1.50
1.25
1.00
0.75
0.50
0.25
0.00
0
100
200
300
TIME (in minutes)

DOUBLE RING INFILTROMETER TEST DATA SHEET

TEST LOCATION: Ormet Corporation Disposal Pond #4 Section A DATE: 8/15/88
START TIME: 13:15 END TIME: 17:45
WATER SOURCE: Ormet Corporation Recreation Area Well pH: 7.31
DEPTH OF WATER: 3 inches

		OUTER RING		INNER RING	
ELAPSED TIME (minutes)	WATER TEMP (Deg. C)	WATER VOLUME (ml)	INFILTRATION RATE (in./hour)	WATER VOLUME (ml)	INFILTRATION RATE (in./hour)
15	28	3830	2.75	1030	2.22
30	28.5	2770	1.99	920	1.98
45	28.5	2200	1.584	630	1.35
60	28	1760	1.26	770	1.60
75	27.5	1420	1.02	290	.624
90	27	1550	1.116	250	.54
105	27	1480	1.06	445	.96
120	27	1540	1.11	355	.76
135	27	1490	1.07	400	.86
150	27	1430	1.03	435	.93
165	27	1560	1.12	335	.72
180	28	1480	1.06	630	1.35
195	28.5	1400	1.00	420	.90
210	28.5	1480	1.06	390	.84
225	29	1480	1.06	485	1.04
240	29.5	1440	1.04	385	.84
255	29.5	1370	.98	430	.925
270	30	1380	.99	400	.86

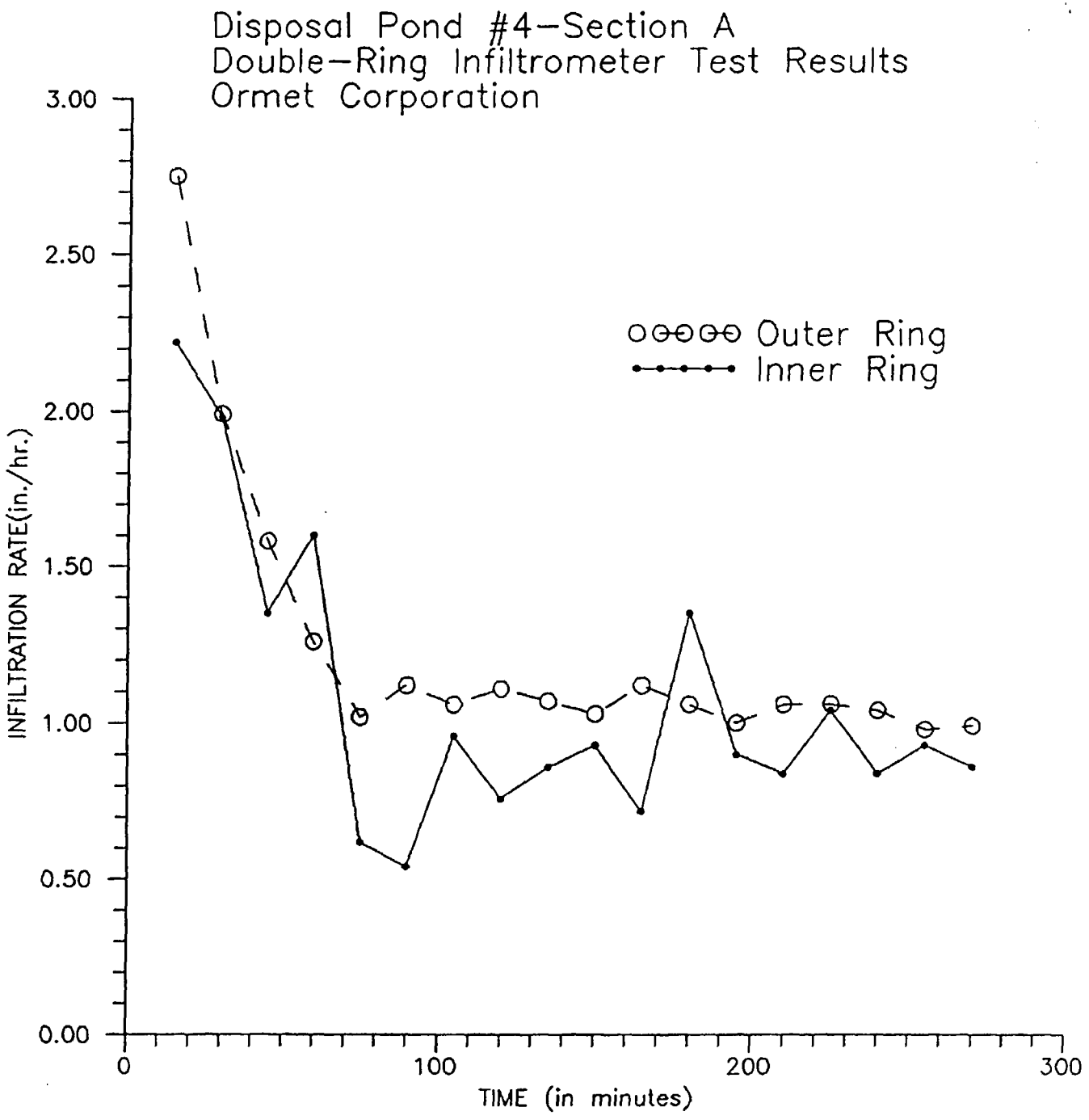
Disposal Pond #4-Section A
Double-Ring Infiltrometer Test Results
Ormet Corporation
Outer Ring
Inner Ring
INFILTRATION RATE(in./hr.)
3.00
2.50
2.00
1.50
1.00
0.50
0.00
0
100
200
300
TIME (in minutes)

DOUBLE RING INFILTROMETER TEST DATA SHEET

TEST LOCATION: Ormet Corporation Disposal Pond #4 Section B DATE: 8/12/88
START TIME: 8:15 END TIME: 14:15
WATER SOURCE: Ormet Corporation Recreation Area Well pH: 7.44
DEPTH OF WATER: 3 inches

		OUTER RING		INNER RING	
ELAPSED TIME (minutes)	WATER TEMP (Deg. C)	WATER VOLUME (ml)	INFILTRATION RATE (in./hour)	WATER VOLUME (ml)	INFILTRATION RATE (in./hour)
15	19.5	4400	3.168	670	1.44
30	19.5	3035	2.18	460	.99
45	19.5	1715	1.23	480	1.03
60	20.5	1560	1.12	450	.969
90	22	2910	1.04	820	.88
120	23	3100	1.16	680	.732
150	24	2360	.85	620	.667
180	24.5	2140	.77	590	.635
210	25.5	2070	.74	700	.75
240	27	2510	.90	510	.55
270	27.5	1830	.65	550	.59
300	29.5	2140	.77	750	.80
330	30	2200	.79	690	.74
360	30	1980	.71	650	.70

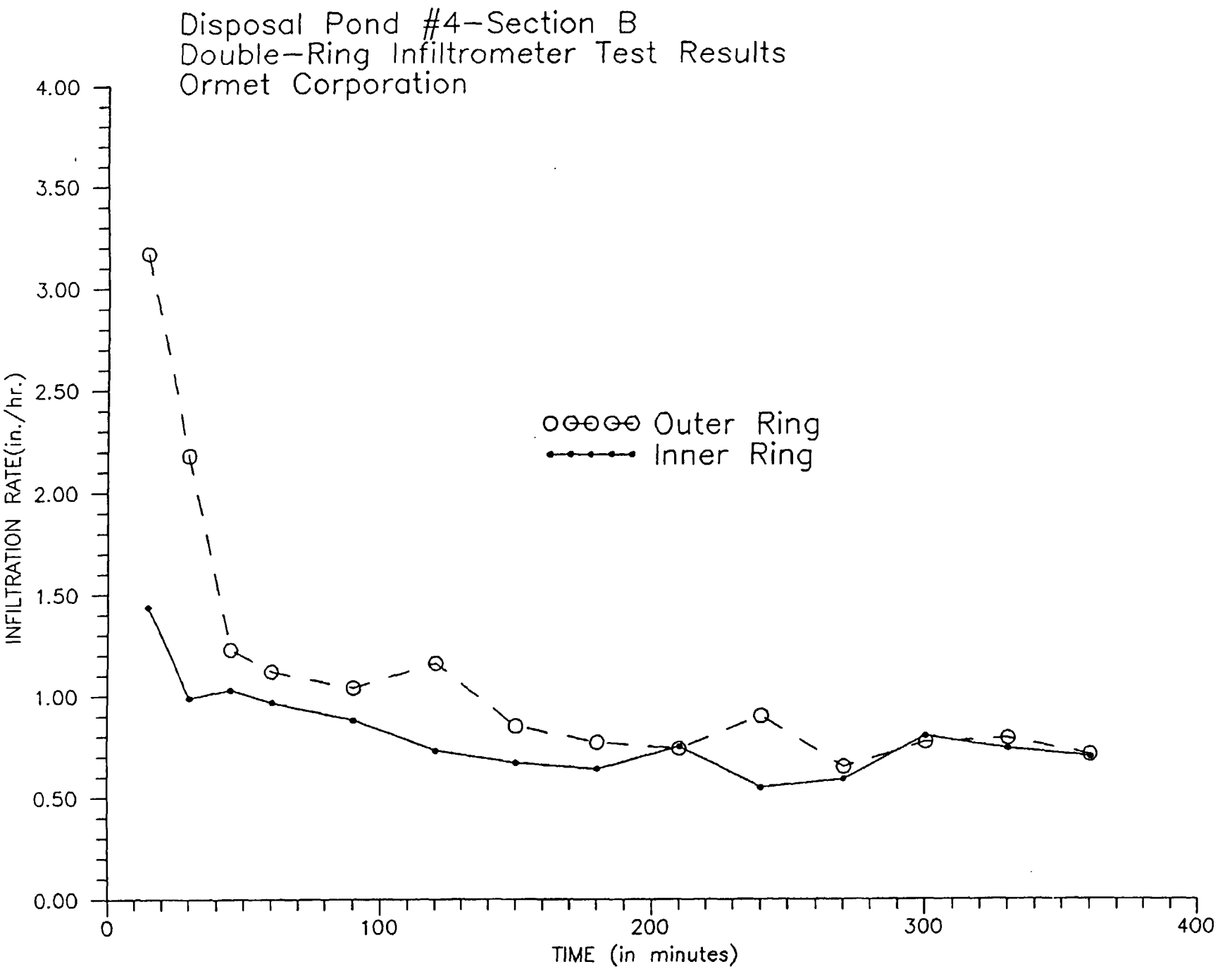
Disposal Pond #4-Section B
Double-Ring Infiltrometer Test Results
Ormet Corporation
Outer Ring
Inner Ring
INFILTRATION RATE(in./hr.)
4.00
3.50
3.00
2.50
2.00
1.50
1.00
0.50
0.00
0
100
200
300
400
TIME (in minutes)

DOUBLE RING INFILTROMETER TEST DATA SHEET

TEST LOCATION: Ormet Corporation Disposal Pond #5 Section A DATE: 8/17/88
START TIME: 8:00 END TIME: 12:00
WATER SOURCE: Ormet Corporation Recreation Area Well pH: 7.35
DEPTH OF WATER: 3 inches

		OUTER RING		INNER RING	
ELAPSED TIME (minutes)	WATER TEMP (Deg. C)	WATER VOLUME (ml)	INFILTRATION RATE (in./hour)	WATER VOLUME (ml)	INFILTRATION RATE (in./hour)
15	20	7100	5.112	1890	4.069
30	20	3460	2.49	1050	2.261
45	21	3007	2.16	820	1.76
60	21	2880	2.07	1150	2.48
75	22	2770	1.99	510	1.098
90	22	2620	1.88	590	1.27
105	23	2640	1.90	750	1.615
120	23	2560	1.84	840	1.80
135	24	2510	1.80	740	1.59
150	24	2460	1.77	800	1.73
165	25	2410	1.74	770	1.66
180	26	2400	1.73	730	1.57
195	26	2360	1.69	770	1.66
210	26	2350	1.69	720	1.55
225	27	2340	1.68	745	1.60
240	28	2320	1.67	765	1.63

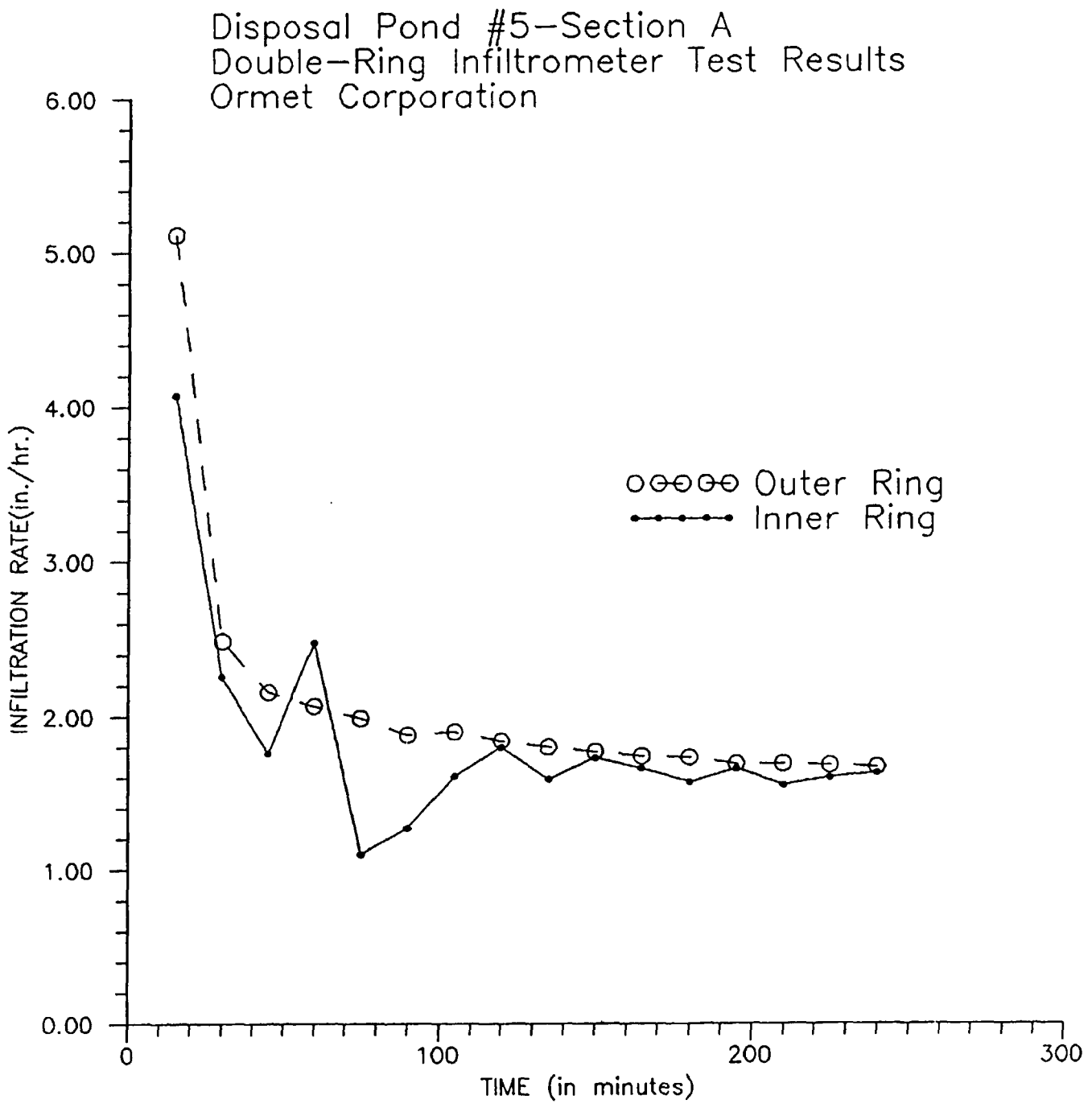
Disposal Pond #5–Section A
Double–Ring Infiltrometer Test Results
Ormet Corporation
6.00
5.00
4.00
3.00
2.00
1.00
0.00
INFILTRATION RATE(in./hr.)
0
100
200
300
TIME (in minutes)
Outer Ring
Inner Ring

DOUBLE RING INFILTROMETER TEST DATA SHEET

TEST LOCATION: Ormet Corporation Disposal Pond 5 Section B DATE: 8/17/88
START TIME: 14:30 END TIME: 18:30
WATER SOURCE: Ormet Corporation Recreation Area Well pH:
DEPTH OF WATER: 3 inches

		OUTER RING		INNER RING	
ELAPSED TIME (minutes)	WATER TEMP (Deg. C)	WATER VOLUME (ml)	INFILTRATION RATE (in./hour)	WATER VOLUME (ml)	INFILTRATION RATE (in./hour)
15	28	7110	5.119	2990	6.44
30		3050	2.196	1300	2.79
45	28.5	3270	2.35	1230	2.65
60		2590	1.86	1210	2.60
75	30	2520	1.81	1240	2.67
90	30	2310	1.66	1050	2.26
105		2260	1.62	1100	2.37
120		2770	1.99	1070	2.30
135		2630	1.93	1020	2.19
150	31	2390	1.72	1030	2.21
165		2550	1.83	1120	2.41
180	31.5	2520	1.81	1120	2.41
195	31	2510	1.80	1130	2.43
210		2480	1.78	1140	2.45
225		2630	1.89	1180	2.54
240	32.5	2630	1.89	1120	2.41

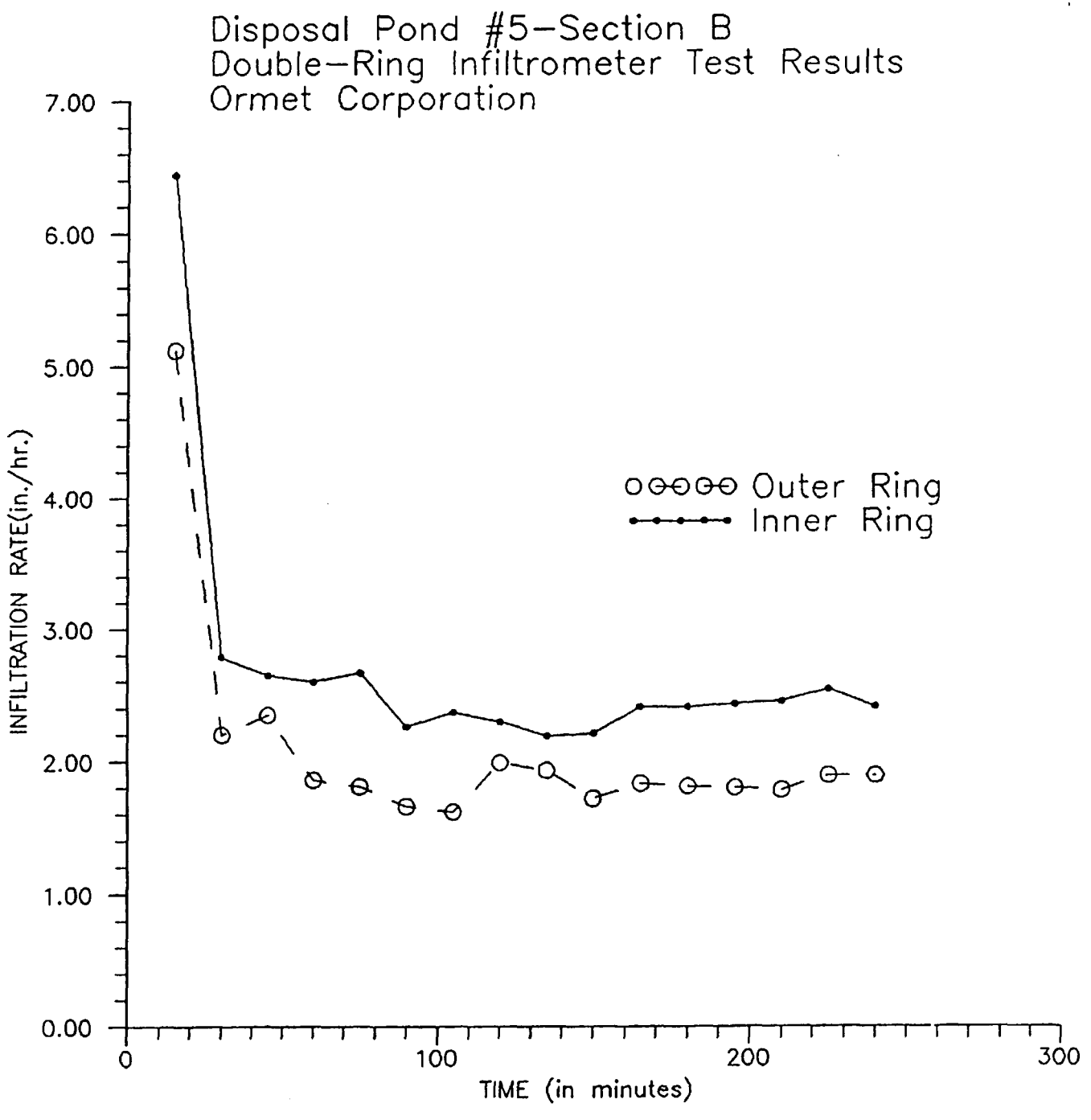
Disposal Pond #5-Section B
Double-Ring Infiltrometer Test Results
Ormet Corporation
7.00
6.00
5.00
4.00
3.00
2.00
1.00
0.00
INFILTRATION RATE(in./hr.)
0
100
200
300
TIME (in minutes)
Outer Ring
Inner Ring

DOUBLE RING INFILTROMETER TEST DATA SHEET

TEST LOCATION: Ormet Corporation Disposal Pond #5 Section C DATE: 8/18/88
START TIME: 9:30 END TIME: 15:30
WATER SOURCE: Ormet Corporation Recreation Area Well pH:
DEPTH OF WATER: 3 inches

		OUTER RING		INNER RING	
ELAPSED TIME (minutes)	WATER TEMP (Deg. C)	WATER VOLUME (ml)	INFILTRATION RATE (in./hour)	WATER VOLUME (ml)	INFILTRATION RATE (in./hour)
15	21	7210	5.19	3490	7.52
30		6550	4.72	2950	6.35
45	22	5820	4.19	1650	3.55
60	23	5610	4.04	1820	3.92
75		5240	3.77	1490	3.21
90		6040	4.35	1790	3.85
105		6170	4.44	2170	4.67
120		6150	4.43	1990	4.28
135		6320	4.55	2150	4.62
150		5960	4.29	1930	4.16
165		6040	4.34	1990	4.29
180	28	5050	3.64	2210	4.76
195	28	5860	4.22	2000	4.31
210	28	5910	4.25	2310	4.97
225	28	5830	4.19	1770	3.81
240	28	5620	4.05	2360	5.08
270	28	11,180	4.02	3920	4.22
300	28	11,130	4.01	3440	3.70
330		11,440	4.12	3640	3.92
360	28.5	11,440	4.12	3720	4.00

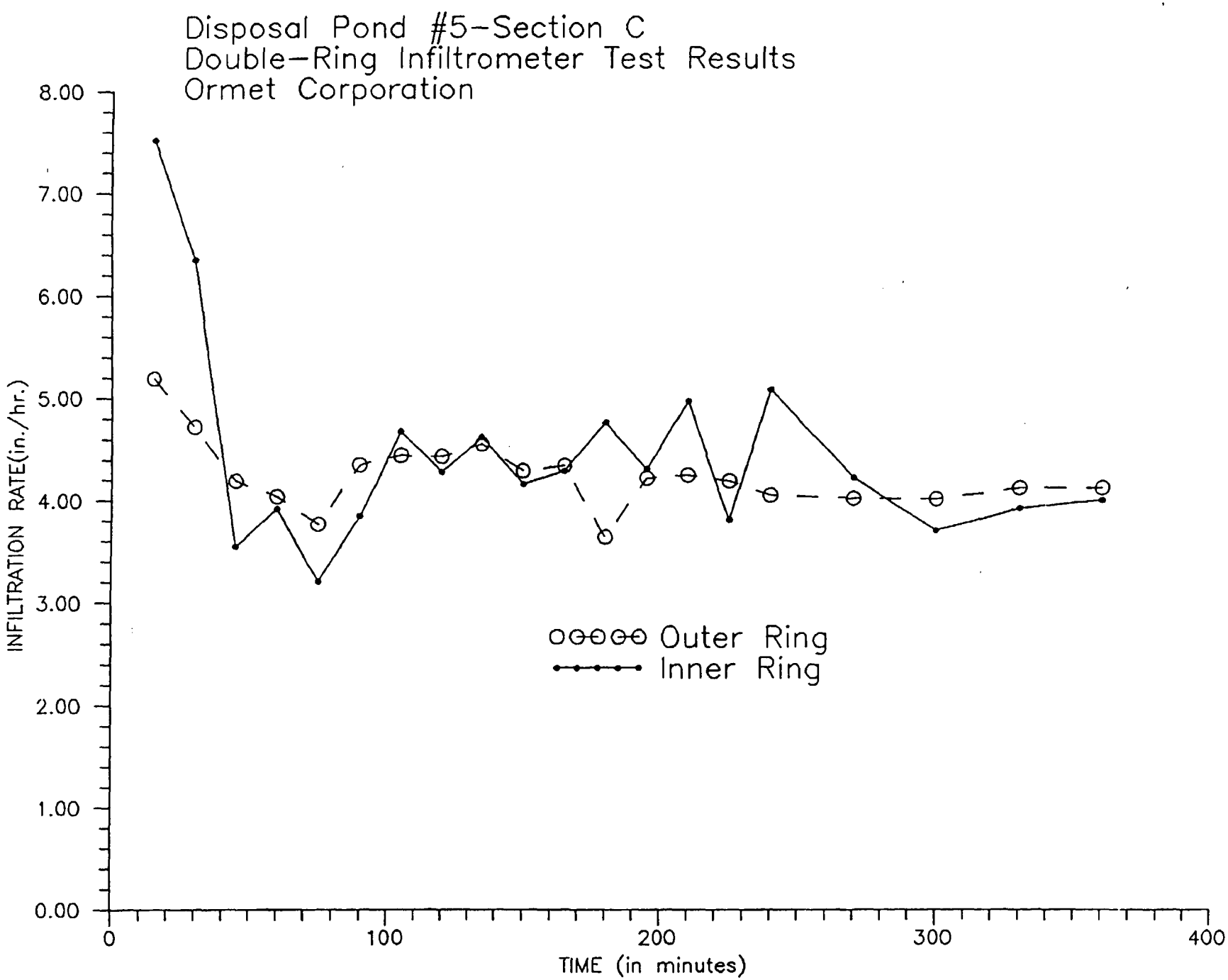
Disposal Pond #5-Section C
Double-Ring Infiltrometer Test Results
Ormet Corporation
INFILTRATION RATE(in./hr.)
8.00
7.00
6.00
5.00
4.00
3.00
2.00
1.00
0.00
0
100
200
300
400
TIME (in minutes)
Outer Ring
Inner Ring

DOUBLE RING INFILTROMETER TEST DATA SHEET

TEST LOCATION: Ormet Corporation Disposal Pond #5 Section D DATE: 8/16/88
START TIME: 15:00 END TIME: 19:00
WATER SOURCE: Ormet Corporation Recreation Area Well pH: 7.34
DEPTH OF WATER: 3 inches

		OUTER RING		INNER RING	
ELAPSED TIME (minutes)	WATER TEMP (Deg. C)	WATER VOLUME (ml)	INFILTRATION RATE (in./hour)	WATER VOLUME (ml)	INFILTRATION RATE (in./hour)
15	27	2540	1.829	1460	3.144
30	27	1770	1.274	970	2.088
45	27	1850	1.332	500	1.077
60	27	1960	1.4112	600	1.292
75	28	1880	1.354	510	1.098
90	28.5	1840	1.325	540	1.163
105	29	1780	1.2816	1120	2.41
120	29	1840	1.325	575	1.238
135		1730	1.245	585	1.259
150	28	1740	1.253	700	1.507
165	28.5	1720	1.24	630	1.356
180	28.5	1780	1.2816	505	1.087
195	28.5	1770	1.27	620	1.335
210	29	1690	1.217	640	1.378
225	29	1720	1.24	590	1.27
240	29	1580	1.14	610	1.31

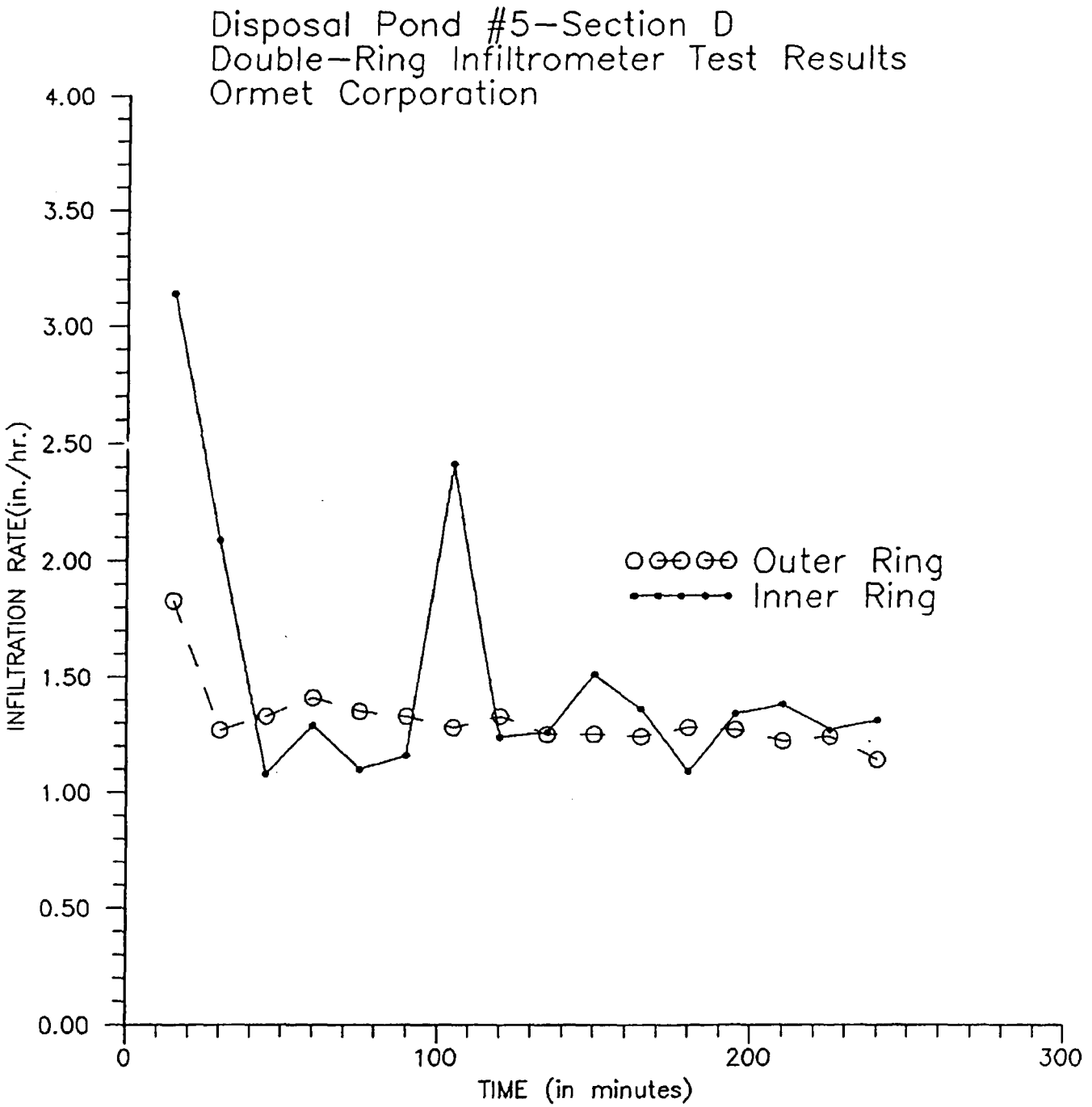
Disposal Pond #5–Section D
Double–Ring Infiltrometer Test Results
Ormet Corporation
INFILTRATION RATE(in./hr.)
4.00
3.50
3.00
2.50
2.00
1.50
1.00
0.50
0.00
0
100
200
300
TIME (in minutes)
Outer Ring
Inner Ring

DOUBLE RING INFILTROMETER TEST DATA SHEET

TEST LOCATION: Ormet Corporation Disposal Pond #5 Section E DATE: 8/19/88
START TIME: 8:30 END TIME: 12:30
WATER SOURCE: Ormet Corporation Recreation Area Well pH:
DEPTH OF WATER: 3 inches

		OUTER RING		INNER RING	
ELAPSED TIME (minutes)	WATER TEMP (Deg. C)	WATER VOLUME (ml)	INFILTRATION RATE (in./hour)	WATER VOLUME (ml)	INFILTRATION RATE (in./hour)
15	19	12,320	8.87	1010	2.17
30		8880	6.39	910	1.96
45	21	8880	6.39	1000	2.15
60	21	7920	5.70	930	2.00
75		7440	5.35	880	1.89
90	21	8400	6.05	880	1.89
105	21	7920	5.70	940	2.02
120	21	7040	5.06	980	2.11
135	21	6560	4.72	870	1.87
150	21	6360	4.58	880	1.89
165	21	6110	4.39	920	1.98
180	21	5610	4.04	970	2.09
195	22	5280	3.80	950	2.05
210	23	5680	4.09	940	2.02
225	23	4400	3.17	950	2.04
240	25	4500	3.24	960	2.07

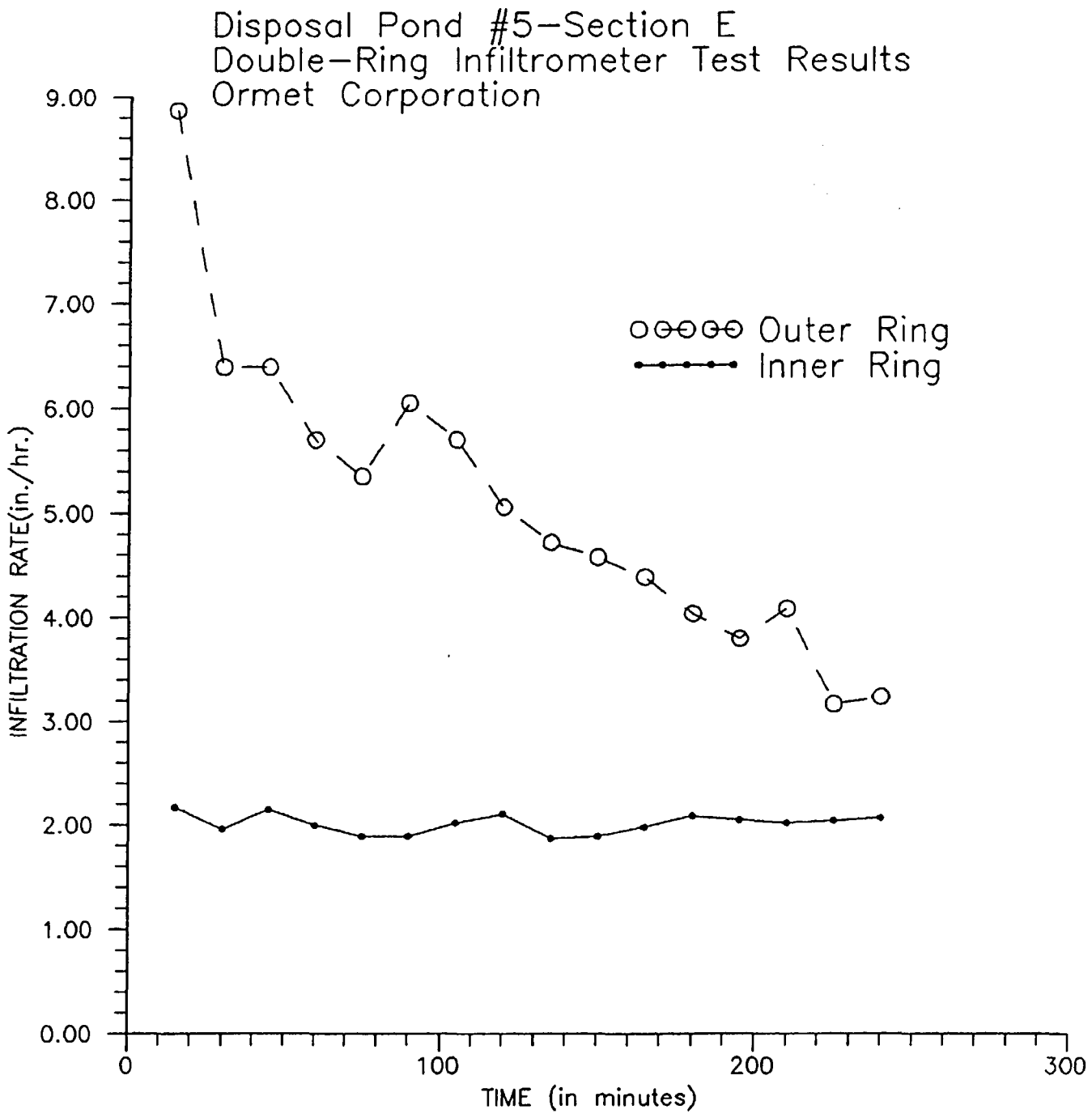
Disposal Pond #5–Section E
Double–Ring Infiltrometer Test Results
Ormet Corporation
Outer Ring
Inner Ring
INFILTRATION RATE(in./hr.)
9.00
8.00
7.00
6.00
5.00
4.00
3.00
2.00
1.00
0.00
0
100
200
300
TIME (in minutes)

APPENDIX E

BORING LOGS FOR FORMER SPENT POTLINER STORAGE AREA SOIL BORINGS

ORMET CORPORATION
HANNIBAL, OHIO

GERAGHTY & MILLER, INC.
Ground-Water Consultants

SAMPLE/CORE LOG

Boring/Well SB-001 Project/No. ORMET / R0738 H08 Page 1 of 2

Site Location HANNIBAL, OHIO Drilling Started 8:05 A.M. 2/17/88 Drilling Completed 9:55 A.M 2/17/88

Total Depth Drilled 10 feet Hole Diameter 8 inches Type of Sample/Coring Device SPLIT SPOON

Length and Diameter of Coring Device 2' x 3" Sampling Interval CONT. feet

Land-Surface Elev. 655.29 feet ☒ Surveyed ☐ Estimated Datum MSL

Drilling Fluid Used — Drilling Method HSA

Drilling Contractor Pennsylvania Drilling Driller R. Waddell Helper Kurt

Prepared By J. B. Naser Hammer Weight 300# Hammer Drop 30 inches

Sample/Core Depth (feet below land surface) From	To	Core Recovery (feet)	Time/Hydraulic Pressure or Blows per 6 inches	Sample/Core Description
0.0	2.0	1.5	1/1/4/13	95% fine, well rounded, silty sand
				w/ white specs; 5% med-coarse,
				subangular gravel; gray, soft, dry
2.0	4.0	1.8	10/23/20/23	(Top .6') 95% fine, well rounded, silty
				sand w/ white specs; 5% med-coarse,
				subangular gravel; gray, soft, dry
				(Bottom 1.2') 50% coarse, sub rounded, sand,
				25% fine sand; 25% med-coarse
				sub-rounded gravel; med brown, sl. moist,
				med. dence.
4.0	6.0	2.0	6/8/10/12	(Top 1.7) 95% med-coarse, subrounded, sand;
				5% fine, sub rounded, gravel; light brown,
				well sorted, sl. moist soft.
				(Bottom .3) 90% fine, silty sand w/ white
				specs; minor trace - 10% med-coarse
				gravel (potliner?)
6.0	8.0	2.0	3/7/8/10	(Top .2) 90% fine, silty sand w/ white specs;
				minor trace - 10% med. coarse, gravel (potliner?)
				(Bottom 1.8) 90% med. coarse, sub-rounded
				sand, 5% med-coarse, sub-rounded gravel;

GERAGHTY & MILLER, INC.
Ground-Water Consultants

SAMPLE/CORE LOG (Cont.d)

Boring/Well SB-001

Prepared By J.B. Naser

Sample/Core Depth (feet below land surface) From	To	Core Recovery (feet)	Time/Hydraulic Pressure or Blows per 6 inches	Sample/Core Description
6.0	8.0	2.0	3/7/8/10	5% fine, sub-rounded, sand; well sorted
				loose, med. brown, sl. damp
8.0	10.0	1.5	3/6/7/8	90% med-coarse, sub-rounded sand;
				5% fine, sub-rounded sand; 5%
				med-coarse, sub-rounded gravel;
				med brown, well sorted, loose, damp

GERAGHTY & MILLER, INC.
Ground-Water Consultants

BORLOG-0002

SAMPLE/CORE LOG

Boring/Well SB-002 Project/No. ORMET / H0738 H08 Page 1 of 2

Site Location Hannibal, OHIO Drilling Started 10:05 2/17/88 Drilling Completed 11:05 2/17/88

Total Depth Drilled 10 feet Hole Diameter 8 inches Type of Sample/Coring Device Split Spoon

Length and Diameter of Coring Device 2' x 3" Sampling Interval CONT. feet

Land-Surface Elev. 661.98 feet ☒ Surveyed ☐ Estimated Datum MSL

Drilling Fluid Used — Drilling Method HSA

Drilling Contractor Pennsylvania Drilling Driller R. Waddell Helper Kurt W.

Prepared By J. B. Naser Hammer Weight 300 # Hammer Drop 30 inches

Sample/Core Depth (feet below land surface) From	To	Core Recovery (feet)	Time/Hydraulic Pressure or Blows per 6 inches	Sample/Core Description
0.0	2.0	1.5	1/4/8/8	30% med, sub-rounded, sand; 30%
				fine, sub-rounded, sand; 30% silt;
				10% med-coarse, gravel; minor specs
				of black material (carbon?), sub-angular,
				dry, med brown, sl. dense
2.0	4.0	1.5	4/5/10/20	(TOP) 1.0 70-80% med-coarse, sub-rounded, sand;
				5-10% - med-coarse gravel; 15% silt,
				med-brown, dry, soft
				(Bottom .5') light gray & white, fine
				mottled material (pot liner?)
4.0	6.0	2.0	4/21/45/30	4'-5'; 85% clay & silt; 10% fine-
				coarse, sub rounded, sand; 5% coarse,
				sub-angular gravel, med brown, dry, dense
				5-5.5' black, carbon material
				5.5-6.0 70% silt & clay; 15-25% fine,
				sub rounded sand; 5-10% coarse,
				sub angular gravel; light brown,
				dry dense
6.0	8.0	1.7	15/25/28/30	60-70% med-coarse, sub rounded, sand
				15-25% med-coarse, well rounded gravel

GERAGHTY & MILLER, INC.
Ground-Water Consultants

SAMPLE/CORE LOG (Cont.d)

Boring/Well SB-002

Prepared By J. B. Naser

Sample/Core Depth (feet below land surface) From	To	Core Recovery (feet)	Time/Hydraulic Pressure or Blows per 6 inches	Sample/Core Description
6.0	8.0	1.9	12/23/28/30	(cont.); light brown, damp, med-dense,
				sorting inc. w/ depth
8.0	10.0	1.9	5/12/11/10	80% med-coarse, well rounded, sand;
				15% med-coarse, sub-rounded, gravel;
				5% silt; med brown, med. dense, damp

GERAGHTY & MILLER, INC.
Ground-Water Consultants

SAMPLE/CORE LOG

Boring/Well SB-003 Project/No. ORMET/ H0738 H08 Page 1 of 1

Site Location Hannibal, OHIO Drilling Started 1:18 PM 2/17/88 Drilling Completed 2:05 2/17/88

Total Depth Drilled 10 feet Hole Diameter 8 inches Type of Sample/Coring Device SPLIT SPOON

Length and Diameter of Coring Device 2' x 3" Sampling Interval Cont. feet

Land-Surface Elev. 663.96 feet ☒ Surveyed ☐ Estimated Datum MSL

Drilling Fluid Used — Drilling Method HSA.

Drilling Contractor Pennsylvania Drilling Driller R. Waddell Helper Kurt W.

Prepared By J. B. Naser Hammer Weight 300# Hammer Drop 30 inches

Sample/Core Depth (feet below land surface) From	To	Core Recovery (feet)	Time/Hydraulic Pressure or Blows per 6 inches	Sample/Core Description
0.0	2.0	1.9	1/7/9/10	50-60% fine-medium, sub rounded, sand;
				20-30% clay & silt; 15% fine-medium
				gravel; med. brown, dry, soft, well sorted
				(1.7-2.0) light gray, fine material (pot liner?)
2.0	4.0	2.0	7/8/7/9	45-55% fine-med sand, sub rounded, sand;
				40% clay & silt; 20% fine-coarse, sub-rounded
				gravel; dry, soft, poorly sorted, med. brown,
				minor traces of black specs (carbon material?)
4.0	6.0	1.6	3/10/14/8	80-90% fine-med, sub rounded, sand;
				5-10% fine-med, well rounded gravel;
				trace amounts of silt & clay; well sorted,
				med. brown, damp, sl. dense.
6.0	8.0	1.9	2/4/8/8	80-90% fine-med, subrounded sand;
				5-10% fine-med, well rounded, gravel;
				trace amounts of silt & clay; damp,
				soft, well sorted med. brown
8.0	10.0	1.5	4/4/5/7	75-85% fine-med, sub-rounded sand;
				5-10% fine-med, well rounded gravel;
				5% silt & clay; damp soft, well sorted
				medium brown.

GERAGHTY & MILLER, INC.
Ground-Water Consultants

BORLOG-~~0003(CONT.)~~ 0004 RRZ. 2-26-88

SAMPLE/CORE LOG

Boring/Well SB-004 Project/No. ORMET / R0738 H08 Page 1 of 1

Site Location Hannibal, OHIO Drilling Started 2:48 PM 2/17/88 Drilling Completed 3:30 PM 2/17/88

Total Depth Drilled 10 feet Hole Diameter 8 inches Type of Sample/Coring Device SPLIT SPOON

Length and Diameter of Coring Device 2' x 3" Sampling Interval CONT. feet

Land-Surface Elev. 664.26 feet ☒ Surveyed ☐ Estimated Datum MSL

Drilling Fluid Used — Drilling Method H.S.A

Drilling Contractor Pennsylvania Drilling Driller R. Waddell Helper Kurt W.

Prepared By J.B. Naser Hammer Weight 300 # Hammer Drop 30 inches

Sample/Core Depth (feet below land surface) From	To	Core Recovery (feet)	Time/Hydraulic Pressure or Blows per 6 inches	Sample/Core Description
0.0	2.0	1.7	3/10/10/10	(0-.9) 60-70% fine-coarse, sub-rounded,
				sand, 10-20% med-coarse, well rounded,
				gravel; 15-25% silt
				(.9-2.0) 100% fine-med, sub-rounded,
				sub-angular, sand; trace of clay;
				med-brown, well sorted, soft
2.0	4.0	1.6	3/5/7/8	95% med-coarse, sub rounded, sub-angular,
				well sorted, v. moiste sand; 5%
				fine-med., well rounded, gravel,
				med. brown soft, well sorted
4.0	6.0	1.5	1/2/4/5	95% med-coarse, sub-rounded sub angular
				sand; 5% fine-med, well rounded, gravel
				; well sorted, v. moist, med brown, soft
6.0	8.0	1.6	1/2/4/5	95% med-coarse, sub-rounded, sub-angular
				sand; 5% fine-med well rounded gravel
				; well sorted v. moist, med brown, soft
8.0	10.0	2.0	1/2/2/4	95% med-coarse, sub-rounded sub-angular
				sand; 5% fine-med, well rounded gravel
				; well sorted, v. moist, med brown soft

GERAGHTY & MILLER, INC.
Ground-Water Consultants

BORLOG-0005

SAMPLE/CORE LOG

Boring/Well SB-005 Project/No. ORMET / H0738 H08 Page 1 of 2

Site Location Hannibal, OHIO Drilling Started 4:20 PM 2/17/88 Drilling Completed 5:10 PM 2/17/88

Total Depth Drilled 10 feet Hole Diameter 8 inches Type of Sample/Coring Device Split Spoon

Length and Diameter of Coring Device 2' x 3" Sampling Interval Cont. feet

Land-Surface Elev. 663.61 feet ☒ Surveyed ☐ Estimated Datum MSL

Drilling Fluid Used — Drilling Method H. S. A.

Drilling Contractor Pennsylvania Drilling Driller R. Waddell Helper Kurt. W.

Prepared By J. B. Naser Hammer Weight 300 # Hammer Drop 30 inches

Sample/Core Depth (feet below land surface) From	To	Core Recovery (feet)	Time/Hydraulic Pressure or Blows per 6 inches	Sample/Core Description
0.0	2.0	1.6	3/8/9/10	(0-.8) 50-60% fine-coarse, sub-rounded,
				sub-angular, sand; 15-25% clay & silt,
				10-15% med-coarse, angular gravel;
				dry, med brown, poorly sorted, sl. dense
				(.8-2.0) 80% fine-coarse sub-rounded, sub-angular
				sand; 10-15% fine-medium, angular
				gravel; 5% silt & clay, medium brown
				dry, poorly, sorted, sl. dense
2.0	4.0	1.5	4/8/8/10	85% very fine silty sand; 5% med-
				coarse, sub-angular sand, 10% med.
				coarse, sub-angular gravel; damp
				poorly sorted, medium brown, soft
4.0	6.0	1.7	1/2/3/5	97% med coarse, sub-rounded, sand;
				trace - 3% silt & clay; well sorted
				damp, med brown, soft
6.0	8.0	1.9	2/1/3/6	97% med-coarse, sub-rounded sand;
				trace - 3% silt & clay; well sorted,
				med brown, damp, soft

GERAGHTY & MILLER, INC.
Ground-Water Consultants

SAMPLE/CORE LOG (Cont.d)

Boring/Well SB-005

Prepared By S. B. Naser

Sample/Core Depth (feet below land surface) From	To	Core Recovery (feet)	Time/Hydraulic Pressure or Blows per 6 inches	Sample/Core Description
8.0	10.0	2.0	1/2/3/3	(8 - 8.5) 97% med-coarse, sub rounded,
				sand; trace - 3% silt & clay; well
				sorted, med brown, damp, soft
				(8.5 - 9.2) 80% med-coarse, sub-rounded,
				sand; 20% med-coarse, sub-angular,
				gravel; poorly sorted, medium brown.
				(9.2 - 10.0) med-coarse, sub-rounded,
				well sorted, sand w/ layers of
				black resinuous material; damp,
				medium brown, soft

GERAGHTY & MILLER, INC.
Ground-Water Consultants

BORLOG-0006

SAMPLE/CORE LOG

Boring/Well SB-006 Project/No. ORMET / R0738H08 Page 1 of 3

Site Location Hannibal, OHIO Drilling Started 7:30 A.M. 2/18/88 Drilling Completed 8:15 A.M. 2/18/88

Total Depth Drilled 10 feet Hole Diameter 8 inches Type of Sample/Coring Device Split Spoon

Length and Diameter of Coring Device 2' x 3" Sampling Interval Cont. feet

Land-Surface Elev. 659.96 feet ☒ Surveyed ☐ Estimated Datum MSL

Drilling Fluid Used — Drilling Method H.S.A.

Drilling Contractor Pennsylvania Drilling Driller R. Waddell Helper Kurt W.

Prepared By J.B. Naser Hammer Weight 300# Hammer Drop 30 inches

Sample/Core Depth (feet below land surface) From	To	Core Recovery (feet)	Time/Hydraulic Pressure or Blows per 6 inches	Sample/Core Description
0.0	2.0	1.5	1/2/10/7	70-80% med-coarse, sub-rounded, sub-angular, sand; 15-20% med. coarse, sub-angular, gravel; trace amount of clay; poorly sorted, med brown, Sl. dense
2.0	4.0	1.8	5/9/10/8	60-70% med-coarse, sub-angular, sub rounded, sand; 20-30% med-coarse, sub-angular, gravel, trace amount of clay, poorly sorted, dry, med brown, Sl. dense
4.0	6.0	1.8	6/7/10/11	60% med-coarse, sub-rounded, sub-angular, sand; 40% med-coarse, sub-rounded, subangular, gravel; well sorted, dry, med brown, sl. dense
6.0	8.0	1.7	4/10/11/9	70% med-coarse, sub-rounded, sub-angular sand; 25-30% med. coarse, sub-rounded, sub-angular, gravel, traces of clay & silt; dry, poorly sorted, med brown, sl. dense

GERAGHTY & MILLER, INC.
Ground-Water Consultants

SAMPLE/CORE LOG (Cont.d)

Boring/Well SB-006

Prepared By J. B. Nager

Sample/Core Depth (feet below land surface) From	To	Core Recovery (feet)	Time/Hydraulic Pressure or Blows per 6 inches	Sample/Core Description
8.0	10.0	1.8	1/1/1/1	70% med-coarse, sub rounded sub-
				angular, sand; 30% med-coarse
				sub-angular, gravel; med brown,
				damp, soft

GERAGHTY & MILLER, INC.
Ground-Water Consultants

BORLOG-0007

SAMPLE/CORE LOG

Boring/Well SB 007 Project/No. CRMET / R0738H08 Page 1 of 2

Site Location Hannibal, OHIO Drilling Started 8:20 AM 2/18/88 Drilling Completed 9:34 AM 2/18/88

Total Depth Drilled 10 feet Hole Diameter 8 inches Type of Sample/Coring Device Split Spoon

Length and Diameter of Coring Device 2' x 3" Sampling Interval cont. feet

Land-Surface Elev. 655.99 feet ☒ Surveyed ☐ Estimated Datum MSL

Drilling Fluid Used — Drilling Method H.S.A.

Drilling Contractor Pennsylvania Drilling. Driller R. Waddell Helper Kurt W.

Prepared By J.B. Naser Hammer Weight 300 # Hammer Drop 30 inches

Sample/Core Depth (feet below land surface) From	To	Core Recovery (feet)	Time/Hydraulic Pressure or Blows per 6 inches	Sample/Core Description
0.0	2.0	2.0	1/2/50/5	(0-1.0) 80-90% silty clay; 10-20% sub-angular, med-coarse, dark gray & brown, gravel (1.0-1.3) light, gray fine, silty material (Pot liner); (1.3-2.0) carbon material & med-coarse, gravel; dry, dark, gray, v. dense
2.0	4.0	1.9	23/32/25/23	60% med-coarse, sub-rounded, sub-angular, sand; 30% med-coarse, sub-angular, sub-rounded, gravel; 10% clay; dry, poorly, sorted, med brown, dense
4.0	6.0	1.6	2/9/15/14	70-80% med-coarse, sub rounded, sub angular, sand; 15-20% med-coarse, sub-angular, sub-rounded gravel, trace amounts of clay & silt; dry, poorly sorted, medium brown, mod. dense
6.0	8.0	1.5	5/5/12/16	95% med-coarse, sub-angular, sub-rounded sand, 5% medium, well rounded gravel, trace amounts of clay; well sorted, dry, med brown, firm

GERAGHTY & MILLER, INC.
Ground-Water Consultants

SAMPLE/CORE LOG (Cont.d)

Boring/Well SB-007

Prepared By J.B. Naser

Sample/Core Depth (feet below land surface) From	To	Core Recovery (feet)	Time/Hydraulic Pressure or Blows per 6 inches	Sample/Core Description
8.0	10.0	1.7	3/5/7/6	40% med-coarse, sub-angular sand;
				40% med-coarse, sub-angular, sub-angular,
				gravel; 20% clay & silt; med-brown,
				damp, poorly sorted, black carbon
				band, loose

GERAGHTY & MILLER, INC.
Ground-Water Consultants

SAMPLE/CORE LOG

Boring/Well SB-008 Project/No. ORMET / R0738 H08 Page 1 of 2

Site Location Hannibal, Ohio Drilling Started 9:54 AM. 2/18/88 Drilling Completed 10:50 A.M. 2/18/88

Total Depth Drilled 10 feet Hole Diameter 8 inches Type of Sample/Coring Device Split spoon

Length and Diameter of Coring Device 2' x 3" Sampling Interval continuous feet

Land-Surface Elev. 653.80 feet ☒ Surveyed ☐ Estimated Datum MSL

Drilling Fluid Used — Drilling Method H.S.A.

Drilling Contractor Pennsylvania Drilling Driller R. Waddell Helper Kurt

Prepared By J. B. Naser Hammer Weight 300# Hammer Drop 30 inches

Sample/Core Depth (feet below land surface) From	To	Core Recovery (feet)	Time/Hydraulic Pressure or Blows per 6 inches	Sample/Core Description
0.0	2.0	1.8	1/7/25/25	60-70% silt; 10-15% fine-med, sub-rounded sand; 10-15% med-coarse, sub-angular gravel; (1.2-2.0) black, carbon material, traces of brick, and other debre, damp, dark gray, mod. dense
2.0	4.0	1.7	30/43/31/30	30% med-coarse, sub-rounded, gravel; 30% med-coarse, sub-rounded, sub-angular sand; 30% clay & silt; broken brick fragments, med brown, poorly sorted, dry, dense
4.0	6.0	1.6	5/12/13/13	70-80% med-coarse, sub-angular, sub-rounded, sand; 20-30% med-coarse, sub-rounded gravel; dry, med brown, poorly sorted, loose
6.0	8.0	1.7	1/3/7/9	60% med-coarse, sub angular, sub-rounded sand, 40% med-coarse, sub-rounded gravel, damp, poorly sorted, med-brown, loose

GERAGHTY & MILLER, INC.
Ground-Water Consultants

SAMPLE/CORE LOG (Cont.d)

Boring/Well SB-008

Prepared By J.B. Naser

Sample/Core Depth (feet below land surface) From	To	Core Recovery (feet)	Time/Hydraulic Pressure or Blows per 6 inches	Sample/Core Description
8.0	10.0	1.6	3/4/5/7	70-80% med-coarse, sub-rounded,
				silty sand; 20-30%, med-coarse,
				sub-rounded, sub-angular, gravel;
				poorly sorted, damp, med. brown,
				sl. dense -

GERAGHTY & MILLER, INC.
Ground-Water Consultants

BORLOG-0009

SAMPLE/CORE LOG

Boring/Well SB-009 Project/No. ORMET / R0738H08 Page 1 of 2

Site Location Hannibal, OHIO Drilling Started 11:10 AM 2/18/88 Drilling Completed 11:50 AM 2/18/88

Total Depth Drilled 10 feet Hole Diameter 8 inches Type of Sample/Coring Device Split Spoon

Length and Diameter of Coring Device 2' x 3" Sampling Interval Cont. feet

Land-Surface Elev. 652.50 feet ☒ Surveyed ☐ Estimated Datum MSL

Drilling Fluid Used — Drilling Method H.S.A.

Drilling Contractor Pennsylvania Drilling Driller R. Waddell Helper Kurt. W.

Prepared By J. B. Naser Hammer Weight 300# Hammer Drop 30 inches

Sample/Core Depth (feet below land surface) From	To	Core Recovery (feet)	Time/Hydraulic Pressure or Blows per 6 inches	Sample/Core Description
0.0	2.0	1.8	1/3/10/12	70-80% fine-med, sub-rounded, sand;
				10-20% med-coarse, sub-angular, gravel;
				trace amounts of silt & clay; black
				carbon material, damp, poorly sorted,
				dark gray, sl. dense
2.0	4.0	2.0	9/8/9/10	(2.0-3.0) 70-80% fine-med, sub-rounded,
				sand; 10-20% med-coarse, sub-angular,
				gravel, trace amounts of silt & clay
				(3.0-4.0) light gray material w/
				white specs (pot liner?); some
				wood, damp, poorly sorted
4.0	6.0	1.5	5/7/6/6	50% med-coarse, sub-rounded, sub-angular,
				sand; 50% med-coarse, sub-rounded
				gravel; poorly sorted, med. brown,
				moist, sl. dense
6.0	8.0	1.3	4/4/4/5	60% med-coarse, well rounded,
				sub-angular gravel; 40% med-coarse
				sub-rounded, sand; med. brown,
				moist, poorly sorted, sl. dense

GERAGHTY & MILLER, INC.
Ground-Water Consultants

SAMPLE/CORE LOG (Cont.d)

Boring/Well SB-009

Prepared By J. B. Naser

Sample/Core Depth (feet below land surface) From	To	Core Recovery (feet)	Time/Hydraulic Pressure or Blows per 6 inches	Sample/Core Description
8.0	10.0	1.7	4/5/5/5	90% med-coarse, sub-rounded, sand.
				10% medium, well rounded, gravel.
				damp, med. brown, well sorted, loose

GERAGHTY & MILLER, INC.
Ground-Water Consultants

RORLOG-0010

SAMPLE/CORE LOG

Boring/Well SB-010 Project/No. ORMET/ R0738 H08 Page 1 of ____

Site Location Hannibal, Ohio Drilling Started 1:45 PM 2/18/88 Drilling Completed 2:20 PM 2/18/88

Total Depth Drilled 10 feet Hole Diameter 8 inches Type of Sample/ Coring Device split spoon

Length and Diameter of Coring Device 2' x 3" Sampling Interval Cont. feet

Land-Surface Elev. 653.59 feet ☒ Surveyed ☐ Estimated Datum MSL

Drilling Fluid Used ____ Drilling Method H.S.A.

Drilling Contractor Pennsylvania Drilling Driller R. Waddell Helper Kurt. W.

Prepared By J. B. Naser Hammer Weight 300 # Hammer Drop 30 inches

Sample/Core Depth (feet below land surface) From	To	Core Recovery (feet)	Time/Hydraulic Pressure or Blows per 6 inches	Sample/Core Description
0.0	2.0	1.9	10/12/10/9	60% med-coarse, sub-rounded, sand;
				20% med-coarse, sub-rounded, gravel;
				20% clay; dry, med brown, mod. dense
				top .2" black carbon material
2.0	4.0	1.0	8/5/6/9	80% med-coarse, sub-rounded, sub-angular,
				sand; 20% med-coarse, sub-rounded
				gravel; poorly sorted; sl. damp, med-brown,
				sl. dense
4.0	6.0	1.5	2/4/5/7	80% med-coarse, sub-rounded, sub-angular,
				sand; 20% med-coarse, sub-rounded,
				gravel; poorly sorted, med brown,
				sl. damp sl. dense
6.0	8.0	1.6	3/3/3/7	70% med-coarse, sub-rounded, sub-angular,
				sand; 30% med-coarse, sub-rounded,
				gravel; poorly sorted; med brown, damp
				loose
8.0	10.0	1.5	4/4/4/3	80% med-coarse, sub-rounded, sub-angular,
				sand; 20% med-coarse, sub-rounded,
				gravel, poorly sorted, med. brown,
				damp loose

GERAGHTY & MILLER, INC.
Ground-Water Consultants

ORLOG-0011

SAMPLE/CORE LOG

Boring/Well SB-011 Project/No. ORMET / R0738 H08 Page 1 of 1

Site Location Hannibal, OHIO Drilling Started 2:38 2/18/88 Drilling Completed 3:18 2/18/88

Total Depth Drilled 10 feet Hole Diameter 8 inches Type of Sample/Coring Device split spoon

Length and Diameter of Coring Device 2' x 3" Sampling Interval Cont. feet

Land-Surface Elev. 658.12 feet ☒ Surveyed ☐ Estimated Datum MSL

Drilling Fluid Used — Drilling Method H.S.A

Drilling Contractor Pennsylvania Drilling Driller R. Waddell Helper Kurt. W.

Prepared By J. B. Naser Hammer Weight 300# Hammer Drop 30 inches

Sample/Core Depth (feet below land surface) From	To	Core Recovery (feet)	Time/Hydraulic Pressure or Blows per 6 inches	Sample/Core Description
0.0	2.0	1.7	1/8/10/11	70-80% med-coarse, sub-rounded, sand;
				15-20% med-coarse, sub-angular, sub-
				rounded, gravel, trace-5% silt&clay;
				dry, poorly sorted, med. brown, sl. dense
2.0	4.0	1.8	5/5/7/7	90% med-coarse, sub-rounded, sub-angular,
				sand; 10-15% sub-rounded, gravel;
				trace amounts of clay, poorly sorted,
				dry, med. brown, .15' band of carbon mat.
4.0	6.0	1.7	2/4/5/5	90% med-coarse, sub-rounded, sub-angular
				sand; 10-15% sub-rounded, gravel;
				trace amounts of clay; poorly
				sorted; damp, med. brown, loose
6.0	8.0	1.6	1/3/4/7	90% med-coarse, sub-rounded, sub-angular,
				sand; 10% well rounded, gravel; damp,
				med brown, loose
8.0	10.0	1.9	2/3/4/6	90% med-coarse, sub-rounded, sub-angular,
				sand; 10% well rounded, gravel, well
				sorted, med brown, damp, loose

GERAGHTY & MILLER, INC.
Ground-Water Consultants

SAMPLE/CORE LOG

Boring/Well SB-012 Project/No. ORMET / R0738 H08 Page 1 of 1

Site Location Hannibal, OHIO Drilling Started 3:52 PM 2/18/88 Drilling Completed 4:35 PM 2/18/88

Total Depth Drilled 10 feet Hole Diameter 8 inches Type of Sample/Coring Device split spoon

Length and Diameter of Coring Device 2' x 3" Sampling Interval Cont. feet

Land-Surface Elev. 659.36 feet ☒ Surveyed ☐ Estimated Datum MSL

Drilling Fluid Used — Drilling Method H.S.A.

Drilling Contractor Pennsylvania Drilling Driller R. Waddell Helper Kurt

Prepared By J. B. Naser Hammer Weight 300 # Hammer Drop 30 inches

Sample/Core Depth (feet below land surface) From	To	Core Recovery (feet)	Time/Hydraulic Pressure or Blows per 6 inches	Sample/Core Description
0.0	2.0	1.8	3/9/17/20	80-85% med-coarse, sub-rounded, sub-
				angular, sand; 10-15% sub-rounded,
				gravel; trace of silt & clay; poorly
				sorted, v. moist, med brown, mod. dense
2.0	4.0	1.7	3/20/19/15	90% med-coarse, sub-rounded, sub-angular,
				sand; 10% sub-rounded, gravel; well
				sorted, v. moist, med brown, mod. dense
4.0	6.0	1.7	1/3/6/5	100% med-coarse, sub-rounded, sub-angular,
				sand, well sorted, med. brown,
				loose, trace of brick & quartz
6.0	8.0	.5	1/2/4/6	95% med-coarse, sub-rounded, sub-angular,
				sand, 5% sub-rounded, med-coarse,
				gravel; well rounded, well sorted,
				med brown, loose
8.0	10.0	2.0	1/1/4/6	100% med-coarse, sub-rounded,
				sub-angular, sand; No gravel,
				well sorted, med. brown, loose

GERAGHTY & MILLER, INC.
Ground-Water Consultants

SAMPLE/CORE LOG

Boring/Well SB-013 Project/No. ORMET/ R0738408 Page 1 of 1

Site Location Hannibal, Ohio Drilling Started 7:29 - 7:45AM 2/19/88 Drilling Completed 8:58 - 9:25AM 2/19/88

Total Depth Drilled 10 feet Hole Diameter 8 inches Type of Sample/ Coring Device Split spoon

Length and Diameter of Coring Device 2' x 3" Sampling Interval Cont. feet

Land-Surface Elev. 656.41 feet ☒ Surveyed ☐ Estimated Datum MSL

Drilling Fluid Used — Drilling Method H.S.A.

Drilling Contractor Pennsyluania Drilling Driller R. Waddell Helper Kurt W.

Prepared By J. B. Naser Hammer Weight 300 # Hammer Drop 30 inches

Sample/Core Depth (feet below land surface) From	To	Core Recovery (feet)	Time/Hydraulic Pressure or Blows per 6 inches	Sample/Core Description
0.0	2.0	1.8	1/7/8/7	70-80% med-coarse, sub-rounded, sub-angular,
				sand; 10-20% med-coarse, sub-rounded,
				sub-angular gravel; trace-5% silt & clay,
				poorly sorted, v. moiste, med brown, sl. dense
2.0	4.0	1.7	4/9/17/16	50-60% med-coarse, sub-rounded, sand;
				20-30% sub-rounded, sub-angular, gravel;
				10-15% silt & clay; med-brown, v. moist,
				poorly sorted (2.4) .1' band of carbon
4.0	6.0	1.7	3/5/8/12	70-75% med-coarse, sub-rounded, sand.
				15-20% med-coarse, sub-angular, sub-rounded,
				gravel; trace-5% silt; poorly sorted,
				med. brown, moist, loose
6.0	8.0	1.8	2/6/6/8	90% med-coarse, sub-rounded, sand;
				10% med-coarse, sub-rounded, gravel;
				well sorted, med. brown, moist, loose
8.0	10.0	1.8	3/4/6/6	80% med-coarse, sub-rounded, sand;
				20% med-coarse, sub-rounded, sub-angular,
				trace of silt, med. brown, poorly sorted
				moist, loose

GERAGHTY & MILLER, INC.
Ground-Water Consultants

SAMPLE/CORE LOG

Boring/Well SB-014 Project/No. ORMET / RO 738 H08 Page 1 of 2

Site Location Hannibal, OHIO Drilling Started 9:46 AM 2/19/88 Drilling Completed 10:36 AM 2/19/88

Total Depth Drilled 10 feet Hole Diameter 8 inches Type of Sample/Coring Device split spoon

Length and Diameter of Coring Device 2' x 3" Sampling Interval Cont. feet

Land-Surface Elev. 656.26 feet ☒ Surveyed ☐ Estimated Datum MSL

Drilling Fluid Used — Drilling Method H.S.A.

Drilling Contractor Pennsylvania Drilling Driller R. Waddell Helper Kurt W.

Prepared By J.B. Naser Hammer Weight 300# Hammer Drop 30 inches

Sample/Core Depth (feet below land surface) From	To	Core Recovery (feet)	Time/Hydraulic Pressure or Blows per 6 inches	Sample/Core Description
0.0	2.0	1.8	1/3/22/18	top .8' - 80% black, carbon, material,
				20% clay ; (lower 1.0) 70% med-coarse,
				sub-rounded, sub-angular, sand; 20%
				med-coarse, sub-rounded, sub-angular,
				gravel, 10% clay ; poorly sorted,
				moist, med brown, Mod. dense
2.0	4.0	2.0	4/7/12/14	(2.0 - 2.3) black carbon material, light
				gray, clay & silt (pot liner?)
				(2.3 - 4.0) 85% med-coarse, sub-rounded,
				sub-angular sand, 10-15% sub-rounded,
				gravel ; trace clay & silt ; well sorted,
				v. damp, med, brown, mod. dense
4.0	6.0	1.7	3/9/12/12	70% med-coarse, sub-rounded, sub-
				angular, sand; 30% med-coarse,
				sub-rounded gravel ; well sorted,
				v. damp, med brown, mod. dense
6.0	8.0	1.7	2/5/6/7	85% med-coarse, sub-rounded, sub-
				angular, sand; 15% well rounded,
				gravel ; trace silt , well sorted,
				moist, med. brown, sl. dense

GERAGHTY & MILLER, INC.
Ground-Water Consultants

SAMPLE/CORE LOG (Cont.d)

Boring/Well SB-014

Prepared By J. B. Naser

Sample/Core Depth (feet below land surface) From	To	Core Recovery (feet)	Time/Hydraulic Pressure or Blows per 6 inches	Sample/Core Description
8.0	10.0	1.7	2/3/4/3	50-60% med-coarse, sub-angular, sub-rounded, gravel; 30-40% sub-rounded, sub-angular, sand; trace-5% silt & clay, V. moist, poorly sorted, med brown, sl. dense

GERAGHTY & MILLER, INC.
Ground-Water Consultants

BORL06-0015

SAMPLE/CORE LOG

Boring/Well SB-015 Project/No. ORMET / R0738 H08 Page 1 of 2

Site Location Hannibal, Ohio Drilling Started 11:07 AM 2/19/88 Drilling Completed 11:45 A.M. 2/19/88

Total Depth Drilled 10 feet Hole Diameter 8 inches Type of Sample/Coring Device split spoon

Length and Diameter of Coring Device 2' x 3" Sampling Interval Cont. feet

Land-Surface Elev. 654.25 feet ☒ Surveyed ☐ Estimated Datum MSL

Drilling Fluid Used — Drilling Method H.S.A.

Drilling Contractor Pennsylvania Drilling Driller R. Waddell Helper Kurt W.

Prepared By J. B. Naser Hammer Weight 300 # Hammer Drop 30 inches

Sample/Core Depth (feet below land surface) From	To	Core Recovery (feet)	Time/Hydraulic Pressure or Blows per 6 inches	Sample/Core Description
0.0	2.0	1.4	3/5/22/17	(0.0-0.7) carbon, material, black/dk gray, v. moist; (0.7-2.0) 25-30% med-coarse, sub-rounded, sub-angular, gravel; 25-30% med-coarse, well rounded, sand; 25-30% silt & clay, moist, poorly sorted, dark gray, mod. dense
2.0	4.0	1.7	12/13/14/13	60-70% med-coarse, sub-rounded, sub-angular, sand; 20-30% med-coarse, sub-rounded, gravel; trace silt; poorly sorted, v. moist, med brown, mod. dense
4.0	6.0	1.5	7/8/6/8	60-70% med-coarse, sub-rounded, sub-angular, gravel; 30% med-coarse, sub-rounded, sub-angular, sand; 10% black carbon material present, poorly sorted, light brown, v. damp.
6.0	8.0	1.7	6/8/10/10	60% med-coarse, sub-rounded, sub-angular, gravel; 30% med-coarse, sub-angular, sand; 10% clay; med. brown, damp poorly sorted, sl. dense

GERAGHTY & MILLER, INC.
Ground-Water Consultants

SAMPLE/CORE LOG (Cont.d)

Boring/Well SB-015

Prepared By J. B. Naser

Sample/Core Depth (feet below land surface) From	To	Core Recovery (feet)	Time/Hydraulic Pressure or Blows per 6 inches	Sample/Core Description
8.0	10.0	1.7	6/5/6/5	75% med-coarse, sub-angular, sub-rounded, sand; 25% med-coarse, sub-angular, sub-rounded, gravel; trace amounts of silt & clay; poorly sorted, v. moist, med brown, sl. dense

GERAGHTY & MILLER, INC.
Ground-Water Consultants

BORLOG-0016

SAMPLE/CORE LOG

Boring/Well SB-016 Project/No. ORMET / R0738408 Page 1 of 1

Site Location Hannibal, Ohio Drilling Started 1:37 PM 2/19/88 Drilling Completed 2:40 P.M. 2/19/88

Total Depth Drilled 10 feet Hole Diameter 8 inches Type of Sample/Coring Device split spoon

Length and Diameter of Coring Device 2' x 3" Sampling Interval Cont. feet

Land-Surface Elev. 653.85 feet ☒ Surveyed ☐ Estimated Datum MSL

Drilling Fluid Used — Drilling Method H.S.A.

Drilling Contractor Pennsylvania Drilling Driller R. Waddell Helper Kurt W.

Prepared By J.B. Naser Hammer Weight 300# Hammer Drop 30 inches

Sample/Core Depth (feet below land surface) From	To	Core Recovery (feet)	Time/Hydraulic Pressure or Blows per 6 inches	Sample/Core Description
0.0	2.0	1.8	3/8/22/28	30% med-coarse, sub-rounded, sub-angular,
				gravel; 30% med-coarse, sub-rounded,
				sub-angular, sand; 30% clay; poorly
				sorted, moist, dark gray, mod. dense,
				bottom .8' black carbon material
2.0	4.0	1.4	6/6/10/15	carbon material, minor sand, and
				dark gray, fine, material (pot liner?)
				v. moist
4.0	6.0	1.8	21/22/31/13	dark gray, white mottled, material (pot
				liner?), v. moist, mod dense
6.0	8.0	1.5	19/28/38/27	(top .5) (pot liner); 7.0-8.0, 50-60%
				coarse, sub rounded, gravel, 20%
				med. coarse, sub-angular, sub-rounded,
				sand, 20% silt & clay; poorly sorted,
				dark gray, saturated, dense
8.0	10.0	1.5	11/12/13/11	(top .5) dark gray, fine, material,
				(pot liner); (9.0-10.0), 60% med-coarse,
				sub-rounded, sub-angular, gravel; 40%
				med-coarse, sub-rounded sub-angular, sand;
				med-brown, poorly sorted, mod. dense, saturated

GERAGHTY & MILLER, INC.
Ground-Water Consultants

BOKLOG-0017

SAMPLE/CORE LOG

Boring/Well SB-017 Project/No. ORMET / R0738 H08 Page 1 of 1

Site Location Hannibal, OHIO Drilling Started 4:40 PM 2/19/88 Drilling Completed 5:20 PM 2/19/88

Total Depth Drilled 10 feet Hole Diameter 8 inches Type of Sample/Coring Device split spoon

Length and Diameter of Coring Device 2' x 3" Sampling Interval Cont. feet

Land-Surface Elev. 662.91 feet ☒ Surveyed ☐ Estimated Datum MSL

Drilling Fluid Used — Drilling Method H.S.A.

Drilling Contractor Pennsylvania Drilling Driller R. Waddell Helper Kurt W.

Prepared By J. B. Naser Hammer Weight 300 # Hammer Drop 30 inches

Sample/Core Depth (feet below land surface) From	To	Core Recovery (feet)	Time/Hydraulic Pressure or Blows per 6 inches	Sample/Core Description
0.0	2.0	2.0	8/20/30/30	70% med-coarse, sub-angular, sub-rounded, gravel; 20-15% med-coarse, sub-angular, sand, 15% clay, poorly sorted, med brown, dry, mod. dense
2.0	4.0	2.0	11/17/8/11	80% med-coarse, sub-angular, sub-rounded, sand; 20% sub-angular, sub-rounded, gravel; poorly sorted, med. brown, dry, sl. dense
4.0	6.0	1.7	3/7/9/11	50% med-coarse, sub-angular, sub-rounded, sand; 50% sub-rounded, med-coarse, gravel; poorly sorted, med. brown, dry.
6.0	8.0	1.8	2/5/6/9	70% med-coarse, sub-angular, sub-rounded, sand; 30% med. coarse, sub-rounded gravel; sl. damp, well sorted, med brown, loose
8.0	10.0	1.9	2/3/6/5	85% med-coarse, sub-angular, sub rounded, sand; 15% med-coarse, sub-angular, sub-rounded, gravel, med. brown, poorly sorted, loose

GERAGHTY & MILLER, INC.
Ground-Water Consultants

BORLOG-0010

SAMPLE/CORE LOG

Boring/Well SB-018 Project/No. ORMET / R0738 H08 Page 1 of 1

Site Location Hannibal, Ohio Drilling Started 4:28 PM 2/20/88 Drilling Completed 5:07 PM 2/20/88

Total Depth Drilled 10 feet Hole Diameter 8 inches Type of Sample/Coring Device Split spoon

Length and Diameter of Coring Device 2' x 3" Sampling Interval Cont. feet

Land-Surface Elev. 663.44 feet ☒ Surveyed ☐ Estimated Datum MSL

Drilling Fluid Used Drilling Method H.S.A.

Drilling Contractor Pennsylvania Drilling Driller R. Waddell Helper Kurt W.

Prepared By J.B. Naser Hammer Weight 300 # Hammer Drop 30 inches

Sample/Core Depth (feet below land surface) From	To	Core Recovery (feet)	Time/Hydraulic Pressure or Blows per 6 inches	Sample/Core Description
0.0	2.0	2.0	12/7/15/15	.4 - 1.2 dark gray, carbon material
				(1.2-2.0) 60% med-coarse, sub-rounded,
				sub-angular, gravel; 25% med-coarse,
				sub-rounded, sub-angular, sand; 15% clay,
				dry, poorly sorted, lower portion med brown,
				sl. dense
2.0	4.0	1.5	5/10/8/15	60% med-coarse, sub-angular, sub-rounded, gravel;
				25% med-coarse, sub-angular, sub-rounded, sand;
				15% clay; med brown, poorly sorted, dry,
				granite fragments, sl. dense
4.0	6.0	1.8	5/7/10/8	60% med-coarse, sub-rounded, sub-angular,
				sand; 40% med-coarse, sub-rounded,
				sub-angular, gravel; poorly sorted, damp, med. brown,
				trace - 5% silt & clay, sl. dense
6.0	8.0	1.3	5/4/5/3	55% med-coarse, sub-rounded, sub-angular, sand;
				35% med-coarse, sub-rounded, gravel, 5% silt & clay;
				moist, med brown, poorly sorted, sl. dense
8.0	10.0	1.8	3/5/4/4	60% med-coarse, sub-rounded, sub-angular,
				gravel; 40% med-coarse, sub-rounded, gravel;
				trace clay; saturated, poorly sorted med brown, sl. dense

GERAGHTY & MILLER, INC.
Ground-Water Consultants

BORLOG-0019

SAMPLE/CORE LOG

Boring/Well SB-019 Project/No. ORMET / R0738 H08 Page 1 of 1

Site Location Hannibal, Ohio Drilling Started 3:30 PM 2/20/88 Drilling Completed 4:10 PM 2/20/88

Total Depth Drilled 10 feet Hole Diameter 8 inches Type of Sample/Coring Device split spoon

Length and Diameter of Coring Device 2' x 3" Sampling Interval Cont. feet

Land-Surface Elev. 664.63 feet ☒ Surveyed ☐ Estimated Datum MSL

Drilling Fluid Used — Drilling Method H.S.A.

Drilling Contractor Pennsylvania Drilling Co. Driller R. Waddell Helper Kurt W.

Prepared By J.B. Naser Hammer Weight 300 # Hammer Drop 30 inches

Sample/Core Depth (feet below land surface) From	To	Core Recovery (feet)	Time/Hydraulic Pressure or Blows per 6 inches	Sample/Core Description
0.0	2.0	1.9	15/25/19/24	40% med-coarse, sub-rounded, gravel; 40% med-coarse, sub-rounded, sub-angular, sand; 20% clay; poorly sorted, black carbon material, med. gray, dry, dense
2.0	4.0	1.7	26/31/29/15	60% med-coarse, sub-rounded, sub-angular, gravel; 40% med-coarse, sub-rounded, sub-angular sand; trace of carbon material, dry, med brown, poorly sorted, dense
4.0	6.0	1.5	13/10/6/7	50% med-coarse, sub-angular, sub-rounded, gravel, 30% clay; 20% med-coarse, sub-rounded, sub-angular sand, med brown, S.S. frags, dry, poorly sorted, mod. dense
6.0	8.0	.5	8/8/9/8	40% med-coarse, sub-rounded, gravel. 40% clay; 20% med-coarse, sub-rounded, sub-angular, sand; poorly sorted, med. brown, damp, loose
8.0	10.0	1.7	3/5/6/7	70% med-coarse, sub-angular, sub-rounded sand; 30% med-coarse, sub-angular, sub-rounded gravel; med. brown, v. damp poorly sorted, loose

GERAGHTY & MILLER, INC.
Ground-Water Consultants

BORLOG-0020

SAMPLE/CORE LOG

Boring/Well SB-020 Project/No. ORMET R0738H08 Page 1 of 1

Site Location Hannibal, Ohio Drilling Started 10:00 AM 2/20/88 Drilling Completed 11:00 AM 2/20/88

Total Depth Drilled 10 feet Hole Diameter 8 inches Type of Sample/Coring Device split spoon

Length and Diameter of Coring Device 2' x 3" Sampling Interval Cont. feet

Land-Surface Elev. 665.39 feet ☒ Surveyed ☐ Estimated Datum MSL

Drilling Fluid Used — Drilling Method H.S.A

Drilling Contractor Pennsylvania Drilling Co. Driller R. Waddell Helper Kurt W.

Prepared By J. B. Naser Hammer Weight 300* Hammer Drop 30 inches

Sample/Core Depth (feet below land surface) From	To	Core Recovery (feet)	Time/Hydraulic Pressure or Blows per 6 inches	Sample/Core Description
0.0	0.5	—	—	pavement
0.5	2.0	1.6	30/32/50/2	40% coarse, sub-angular, sub-rounded, gravel,
				20% med-coarse, sub-rounded, sub-angular sand;
				25%-30% clay; 5% silt; poorly sorted (fill?),
				dull green, dry, brick frags, v. dense
2.0	4.0	1.4	32/33/29/31	65% coarse, sub-rounded (s.s.) gravel; 25% clay;
				10% med-coarse, sub-rounded, sub-angular, sand;
				dull green, poorly sorted, dry, dense
4.0	6.0	1.5	10/10/10/8	55% med-coarse, sub-rounded, gravel; 30%
				med-coarse, sub-rounded, sub-angular, gravel;
				15% clay; dull green, dry, poorly sorted,
				mod. dense
6.0	8.0	1.5	5/5/5/4	60% med-coarse, sub-rounded, gravel; 35%
				med-coarse, sub-rounded, sub-angular, sand;
				5% clay; dull greenish brown, poorly sorted,
				dry, mod. dense
8.0	10.0	1.7	3/2/8/10	60% med-coarse, sub-rounded, sub-angular,
				sand; 40% sub-rounded, med-coarse,
				gravel, trace amounts of clay, dull green/gray;
				moist, poorly sorted, mod. dense

GERAGHTY & MILLER, INC.
Ground-Water Consultants

BORLOG-0021

SAMPLE/CORE LOG

Boring/Well SB-021 Project/No. ORMET / R0738 H08 Page 1 of ____

Site Location Hannibal, Ohio Drilling Started 9:08 AM 2/20/88 Drilling Completed 9:48 AM 2/20/88

Total Depth Drilled 10 feet Hole Diameter 8 inches Type of Sample/Coring Device split spoon

Length and Diameter of Coring Device 2' x 3" Sampling Interval Cont. feet

Land-Surface Elev. 664.37 feet ☒ Surveyed ☐ Estimated Datum MSL

Drilling Fluid Used ____ Drilling Method H.S.A.

Drilling Contractor Pennsylvania Drilling Co. Driller R. Waddell Helper Kurt W.

Prepared By J.B. Naser Hammer Weight 300 Hammer Drop 30 inches

Sample/Core Depth (feet below land surface) From	To	Core Recovery (feet)	Time/Hydraulic Pressure or Blows per 6 inches	Sample/Core Description
0.0	2.0	1.8	15/15/19/20	35% med-coarse, sub-angular, sub-rounded, gravel, 35% med-coarse, sub-angular, sub-rounded, sand; 30% clay & silt; dry, poorly sorted, med. brown mod. dense
2.0	4.0	1.7	7/12/12/11	40% clay; 30-35% med-coarse, sub-rounded, sub-angular, sand, 25-30% med-coarse, sub-rounded, sub-angular, gravel; dull green, poorly sorted, dry, mod. dense
4.0	6.0	1.8	3/4/8/9	60% med-coarse, sub-rounded, sub-angular, sand; 40% med-coarse, sub-rounded, gravel; trace amount of silt & clay; damp, poorly sorted, med. brown, mod. dense
6.0	8.0	1.7	2/6/6/9	60% med-coarse, sub-rounded, sub-angular, sand; 40% med-coarse, sub-angular, gravel, poorly sorted, v. damp, med. brown, loose
8.0	10.0	1.7	1/5/5/5	60% med-coarse, sub-rounded, sub-angular, sand; 40% med-coarse, sub-rounded, gravel; trace silt, v. damp, med. brown, loose

GERAGHTY & MILLER, INC.
Ground-Water Consultants

BORLOG - 0022

SAMPLE/CORE LOG

Boring/Well SB-022 Project/No. ORMET/ R0738 H08 Page 1 of 1

Site Location Hannibal, Ohio Drilling Started 7:44 AM 2/20/88 Drilling Completed 8:32 AM 2/20/88

Total Depth Drilled 10 feet Hole Diameter 8 inches Type of Sample/ Coring Device split spoon

Length and Diameter of Coring Device 2' x 3" Sampling Interval Cont. feet

Land-Surface Elev. 666.37 feet ☒ Surveyed ☐ Estimated Datum MSL

Drilling Fluid Used — Drilling Method H.S.A

Drilling Contractor Pennsylvania Drilling Co. Driller Russell Waddell Helper Kurt W.

Prepared By J.B. Naser Hammer Weight 300# Hammer Drop 30 inches

Sample/Core Depth (feet below land surface) From	To	Core Recovery (feet)	Time/Hydraulic Pressure or Blows per 6 inches	Sample/Core Description
0.0	2.0	1.6	1/1/3/5	85% med-coarse, sub-rounded, sub-angular, sand; 15% med-coarse, sub-rounded, sub-angular, gravel; trace silt & clay, poorly sorted, med. brown, moist, loose
2.0	4.0	1.0	1/1/3/2	100% med-coarse, sub-rounded, sub-angular, sand; well-sorted, med-brown, saturated, loose
4.0	6.0	2.0	1/3/3/5	80% med-coarse, sub-rounded, sub-angular, sand; 20% med-coarse, sub-rounded, sub-angular, gravel; poorly sorted, med brown, saturated
6.0	8.0	1.8	2/4/7/11	80% med-coarse, sub-rounded, sub-angular, sand; 20% med-coarse, sub-rounded, gravel, well sorted. med brown, saturated, loose
8.0	10.0	1.8	2/4/5/8	85% med-coarse, sub-rounded, sub-angular, sand; 15% med-coarse, sub-rounded, gravel; well sorted, med. brown, saturated, loose

GERAGHTY & MILLER, INC.
Ground-Water Consultants

BORLOG-0023

SAMPLE/CORE LOG

Boring/Well SB-023 Project/No. ORMET / R0738 1408 Page 1 of 1

Site Location Hannibal, Ohio Drilling Started 2:10 PM 2/20/88 Drilling Completed 2:57 PM 2/20/88

Total Depth Drilled 10 feet Hole Diameter 8 inches Type of Sample/Coring Device Split Spoon

Length and Diameter of Coring Device 2' x 3" Sampling Interval Cont. feet

Land-Surface Elev. 615.28 feet ☒ Surveyed ☐ Estimated Datum MSL

Drilling Fluid Used — Drilling Method H.S.A.

Drilling Contractor Pennsylvania Drilling Co. Driller R. Waddell Helper Kurt W.

Prepared By J. B. Naser Hammer Weight 300# Hammer Drop 30 inches

Sample/Core Depth (feet below land surface) From	To	Core Recovery (feet)	Time/Hydraulic Pressure or Blows per 6 inches	Sample/Core Description
0.0	2.0	1.9	12/13/13/15	85% med-coarse, sub-rounded, sub-angular, sand; 15% med-coarse, sub-rounded, gravel; sl. damp, poorly sorted, medium brown, (1.7-2.0) dull green, mod. dense
2.0	4.0	2.0	5/8/7/9	60% med-coarse, well-rounded, gravel; 40% med-coarse, sub-angular, sub-rounded, sand; (2.0-3.0) dull green, (3.0-4.0) med. brown; dry, poorly sorted, loose
4.0	6.0	1.8	2/5/7/8	75% med-coarse, sub-rounded, gravel; 25% med-coarse, sub-rounded, sub-angular, sand; sl. damp, poorly sorted, dull green, med. brown, carbon material, loose
6.0	8.0	2.0	2/4/7/8	60% med-coarse, sub-rounded, sub-angular, sand; 40% med-coarse, sub-rounded, gravel; med brown, sl. moist, poorly sorted, loose; slight traces of carbon material
8.0	10.0	2.0	1/3/6/7	65% med-coarse, sub-rounded, sub-angular, sand; 30% med-coarse, sub-rounded, gravel, trace-5% silt & clay, damp, med. brown, well sorted, loose

GERAGHTY & MILLER, INC.
Ground-Water Consultants

BORLOG-0024

SAMPLE/CORE LOG

Boring/Well SB-024 Project/No. ORMET / R0738 H08 Page 1 of 2

Site Location Hannibal, Ohio Drilling Started 11:27 AM 2/20/88 Drilling Completed 12:20 PM 2/20/88

Total Depth Drilled 10 feet Hole Diameter 8 inches Type of Sample/Coring Device split spoon

Length and Diameter of Coring Device 2' x 3" Sampling Interval cont. feet

Land-Surface Elev. 665.78 feet ☒ Surveyed ☐ Estimated Datum MSL

Drilling Fluid Used — Drilling Method H.S.A.

Drilling Contractor Pennsylvania Drilling Co. Driller R. Waddell Helper Kurt W.

Prepared By J. B. Naser Hammer Weight 300 # Hammer Drop 30 inches

Sample/Core Depth (feet below land surface) From	To	Core Recovery (feet)	Time/Hydraulic Pressure or Blows per 6 inches	Sample/Core Description
0.0	0.5	—	—	pavement
0.5	2.0	1.4	15/30/48/2	60% med-coarse, sub-rounded, sub-angular,
				gravel; 30% med-coarse, sub-rounded
				sub-angular, sand; 10% clay (fill);
				poorly sorted, med. brown, dry, v. dense
2.0	4.0	1.9	14/23/23/19	55% med-coarse, sub-rounded, gravel;
				35% med-coarse, sub-rounded, sub-angular,
				gravel; 5% clay; 5% black, carbon
				material, dry, light gray / brown, poorly
				sorted, mod. dense
4.0	6.0	1.7	7/8/8/7	(4.0 - 4.7) 55% med-coarse, sub-angular,
				sub-rounded, gravel; 30% med-coarse,
				sub-angular, sub-rounded, sand; 15% clay.
				(4.7-6.0) dull green / gray; 70% med-coarse,
				sub-rounded, gravel; 25% med-coarse, sub-angular,
				sub rounded, sand; 5% clay, damp, poorly
				sorted, mod. dense
6.0	8.0	1.7	7/7/8/9	60% gravel, med-coarse, sub-rounded,
				sub-angular, 15% clay, 25% med-coarse,
				sub-rounded, sub-angular, sand, pale green,
				redish brown band, dark gray band, moist.

APPENDIX F-1

WATER SAMPLING LOGS FOR PHASE I RI SEEP AND CONDUIT SAMPLING PROGRAM

ORMET CORPORATION
HANNIBAL, OHIO

GERAGHTY & MILLER, INC.
Ground-Water Consultants

RO738H08-WTRL06-0063

WATER SAMPLING LOG

Project/No. Ormet PA073814008 Page 1 of 1

Site Location Hannibal Ohio

Site/~~Well No.~~ Seep #7 (Rt field) (Gillfield) Coded/ Replicate No. _____ Date 7-7-88

Weather Sunny hot 90's Time Sampling Began 1125 Time Sampling Completed 1152

EVACUATION DATA

Description of Measuring Point (MP) NA

Height of MP Above/Below Land Surface NA MP Elevation NA

Total Sounded Depth of Well Below MP NA Water-Level Elevation NA

Held _____ Depth to Water Below MP NA Diameter of Casing _____

Wet _____ Water Column in Well NA Gallons Pumped/~~Bailed~~ Prior to Sampling Parastalic pump for 5 min

Gallons per Foot NA

Gallons in Well NA Sampling Pump Intake Setting (feet below land surface) Surf-H2O

vacuation Method Parastalic pump

SAMPLING DATA/FIELD PARAMETERS

Color i- Brown Odor _____ Appearance Clear Temperature 25 °F/(C)

Other (specific ion; OVA; HNU; etc.) HCN-0

Specific Conductance, umhos/cm 14,200 pH 8.70

Sampling Method and Material Parastalic Pump

Constituents Sampled	Container Description From Lab X or G&M ____	Preservative
Long List Less PCB		

Remarks _____

Sampling Personnel J Campbell, J Chepega, R Fargo, J Naser, K Souza.

WELL CASING VOLUMES

GAL./FT				
	1-¼" = 0.077	2" = 0.16	3" = 0.37	4" = 0.65
	1-½" = 0.10	2-½" = 0.24	3-½" = 0.50	6" = 1.46

GERAGHTY & MILLER, INC.
Ground-Water Consultants

R0738H08-WTRL06-0064

WATER SAMPLING LOG

Project/No. ORMET PA0738H008 Page 1 of 1

Site Location Hannibal Ohio

Site/~~Well No.~~ Seep #2 Coded/ Replicate No. _____ Date 7-7-88

Weather Sunny hot 100° Time Sampling Began 1440 Time Sampling Completed 1453

EVACUATION DATA

Description of Measuring Point (MP) NA

Height of MP Above/Below Land Surface NA MP Elevation _____

Total Sounded Depth of Well Below MP _____ Water-Level Elevation _____

Held _____ Depth to Water Below MP _____ Diameter of Casing _____

Wet _____ Water Column in Well _____ Gallons Pumped/~~Bailed~~ Prior to Sampling Parastalic Pump for 5 min

Gallons per Foot _____

Gallons in Well NA Sampling Pump Intake Setting (feet below land surface) Surf. H_2O

Evacuation Method Parastalic Pump

SAMPLING DATA/FIELD PARAMETERS

Color V Lt Tan Odor _____ Appearance Clear Temperature 22 °F/°C

Other (specific ion; OVA; HNU; etc.) HCN-0

Specific Conductance, umhos/cm 6,800 pH 8.06

Sampling Method and Material Parastalic Pump

Constituents Sampled	Container Description From Lab ____ or G&M ____	Preservative
Long List less PCB		

Remarks _____

Sampling Personnel J Campbell, J Chepega, J Naser, R. Fargo, K Souza

WELL CASING VOLUMES

GAL./FT				
	1-¼" = 0.077	2" = 0.16	3" = 0.37	4" = 0.65
	1-½" = 0.10	2-½" = 0.24	3-½" = 0.50	6" = 1.46

GERAGHTY & MILLER, INC.
Ground-Water Consultants

R0738H08-WTRLOG-0065

WATER SAMPLING LOG

Project/No. ORMET PA0738H008 Page 1 of 1

Site Location Hannibal Ohio

Site/~~Well No.~~ Seep #3 Coded/ Replicate No. MW-50 Date 7-7-88

Weather Sunny 100° Time Sampling Began 1552 Time Sampling Completed 1614

EVACUATION DATA

Description of Measuring Point (MP) NA

Height of MP Above/Below Land Surface NA MP Elevation

Total Sounded Depth of Well Below MP NA Water-Level Elevation

Held ____ Depth to Water Below MP NA Diameter of Casing

Wet ____ Water Column in Well NA Gallons Pumped/Bailed Prior to Sampling Parastalic pump for 5 min

Gallons per Foot NA

Gallons in Well NA Sampling Pump Intake Setting (feet below land surface) Surf. H_2O

Evacuation Method Parastalic pump

SAMPLING DATA/FIELD PARAMETERS

Color LT Tan Odor Hydrogen Sulfide Appearance Clear Temperature 19 °F/°C

Other (specific ion; OVA; HNU; etc.) HCN-0

Specific Conductance, umhos/cm 7,500 pH 7.89

Sampling Method and Material Parastalic pump

Constituents Sampled	Container Description From Lab X or G&M ____	Preservative
Long List less PCB		

Remarks

Sampling Personnel J Campbell, J Chepega, J Naser, R Fargo, K Souza

WELL CASING VOLUMES

GAL./FT				
	1-¼" = 0.077	2" = 0.16	3" = 0.37	4" = 0.65
	1-½" = 0.10	2-½" = 0.24	3-½" = 0.50	6" = 1.46

GERAGHTY & MILLER, INC.
Ground-Water Consultants

R0738H08-WTRL06-0066

WATER SAMPLING LOG

Project/No. ORMET PA0738H008 Page 1 of 1

Site Location Hannibal Ohio

Site/~~Well No.~~ Conduit Seep Coded/ Replicate No. _____ Date 7-7-88

Weather Sunny 80's Time Sampling Began 0945 Time Sampling Completed 1050

EVACUATION DATA

Description of Measuring Point (MP) NA

Height of MP Above/Below Land Surface NA MP Elevation NA

Total Sounded Depth of Well Below MP NA Water-Level Elevation NA

Held _____ Depth to Water Below MP NA Diameter of Casing ≈ 2ft.

Wet _____ Water Column in Well NA Gallons Pumped/Bailed Prior to Sampling _____

Gallons per Foot NA

Gallons in Well NA Sampling Pump Intake Setting (feet below land surface) ~~[illegible]~~ N/A

Evacuation Method _____

SAMPLING DATA/FIELD PARAMETERS

Color Lt ~~[illegible]~~ Green Odor _____ Appearance Clear Temperature 17.5 °F/°C

Other (specific ion; OVA; HNU; etc.) HCN-0

Specific Conductance, umhos/cm 18,900 pH 9.33

Sampling Method and Material Through funnel from conduit Pipe

Constituents Sampled	Container Description From Lab X or G&M _____	Preservative
Long List less PCB		

Remarks _____

Sampling Personnel J. Campbell, J Chepega, J Naser R. Fargo, K Souza

WELL CASING VOLUMES

GAL/FT				
	1-¼" = 0.077	2" = 0.16	3" = 0.37	4" = 0.65
	1-½" = 0.10	2-½" = 0.24	3-½" = 0.50	6" = 1.46

APPENDIX F-2

WATER SAMPLING LOGS FOR PHASE II RI
SEEP SAMPLING PROGRAM

ORMET CORPORATION
HANNIBAL, OHIO

R0738H08-WTRLOG-0073

GERAGHTY & MILLER, INC.
Environmental Services

WATER SAMPLING LOG

Project/No. PA00708-OTMST

Page 1 of 6

Site Location HANNIBAL, OH

Site/Well No. SEEP #2

Coded/ Replicate No. Seep #8

Date 2/1/90

Weather Sunny 50°

Time Sampling Began 1540

Time Sampling Completed 1618

EVACUATION DATA

Description of Measuring Point (MP) SEEP SAMPLE from OMDS

Height of MP Above/Below Land Surface

MP Elevation

Total Sounded Depth of Well Below MP

Water-Level Elevation

Held

Depth to Water Below MP

Diameter of Casing

Wet

Water Column in Well

Gallons Pumped/Bailed Prior to Sampling

Gallons per Foot

Gallons in Well

Sampling Pump Intake Setting (feet below land surface)

Evacuation Method Peristaltic Pump

SAMPLING DATA/FIELD PARAMETERS

Color none

Odor

Appearance Clear

Temperature 13.5 °F/°C

Other (specific ion; OVA; HNU; etc.) Sheen on water

Specific Conductance, umhos/cm 4500

pH 8.22

Sampling Method and Material Pyrex beaker / peristaltic pump

Constituents Sampled	Container Description From Lab X or G&M ___	Preservative
CLP VOA / CLP Semi VOL	40mL Amber Glass / 1 Liter Glass	HCL / ICE
CLP Pest/PCB's / CLP Metals	1 Liter Glass / 1 Liter Plastic	ICE / HNO_3 field filtered
CN Total / CN Amenable	1 Liter Plastic / 1 Liter Plastic	NAOH / NAOH
Gen Chem / Silica	1 Liter Plastic / 250 mL Plastic	ICE / ICE
Tin	250 mL Plastic	HNO_3
TOC	40 mL Glass	H_2SO_4
NH_3	1 Liter Plastic	H_2SO_4

Remarks Evac Seep 5 min prior to Sampling - Duplicated Seep

Sampling Personnel JC, JN, ST

WELL CASING VOLUMES

GAL./FT.				
	1-¼" = 0.06	2" = 0.16	3" = 0.37	4" = 0.65
	1-½" = 0.09	2-½" = 0.26	3-½" = 0.50	6" = 1.47

Southprint 89-1473

R0738H08-WTRL06-0074

GERAGHTY & MILLER, INC.
Environmental Services

WATER SAMPLING LOG

Project/No. PA00708 - OTUMET

Page 2 of 6

Site Location HANNIBAL, OH

Site/Well No. SEEP #5

Coded/ Replicate No.

Date 2/21/90

Weather Sunny 50°

Time Sampling Began 1620

Time Sampling Completed 1640

EVACUATION DATA

Description of Measuring Point (MP) SEEP SAMPLES from CMDS

Height of MP Above/Below Land Surface

MP Elevation

Total Sounded Depth of Well Below MP

Water-Level Elevation

Held

Depth to Water Below MP

Diameter of Casing

Wet

Water Column in Well

Gallons Pumped/Bailed Prior to Sampling

Gallons per Foot

Gallons in Well

Sampling Pump Intake Setting (feet below land surface)

Evacuation Method Peristaltic Pump

SAMPLING DATA/FIELD PARAMETERS

Color Coffee Odor Appearance Stained Temperature 10 °F/°C

Other (specific ion; OVA; HNU; etc.) Color does not filter out also foamy when filtered into sm. metals containers

Specific Conductance, umhos/cm 4900 pH 8.94

Sampling Method and Material Pyrex beaker / peristaltic pump

Constituents Sampled	Container Description From Lab X or G&M	Preservative
Same as page 1		

Remarks Evac for 5 min

Sampling Personnel ST, KC, JW

WELL CASING VOLUMES

GAL./FT.				
	1-¼" = 0.06	2" = 0.16	3" = 0.37	4" = 0.65
	1-½" = 0.09	2-½" = 0.26	3-½" = 0.50	6" = 1.47

Southpoint 89-1473

R0738H08-WTRLOG-0075

GERAGHTY & MILLER, INC.
Environmental Services

WATER SAMPLING LOG

Project/No. PA00708 - ORMET

Page 3 of 6

Site Location Hannibal, OH

Site/Well No. SEEP #6

Coded/ Replicate No.

Date 2/21/90

Weather Sunny 50

Time Sampling Began 1650

Time Sampling Completed 1720

EVACUATION DATA

Description of Measuring Point (MP) SEEP SAMPLE FROM CMDS

Height of MP Above/Below Land Surface

MP Elevation

Total Sounded Depth of Well Below MP

Water-Level Elevation

Held

Depth to Water Below MP

Diameter of Casing

Wet

Water Column in Well

Gallons Pumped/Bailed Prior to Sampling

Gallons per Foot

Gallons in Well

Sampling Pump Intake Setting (feet below land surface)

Evacuation Method Peristaltic Pump

SAMPLING DATA/FIELD PARAMETERS

Color yellow-Amber Odor Appearance Stained Temperature 12.5 °F/°C

Other (specific ion; OVA; HNU; etc.)

Specific Conductance, umhos/cm 7,800 pH 8.80

Sampling Method and Material Pyrex beaker / teflon bailer

Constituents Sampled	Container Description From Lab X or G&M	Preservative
Same as page 1		

Remarks

Sampling Personnel STJC, JW

WELL CASING VOLUMES

GAL./FT.				
	1-¼" = 0.06	2" = 0.16	3" = 0.37	4" = 0.65
	1-½" = 0.09	2-½" = 0.26	3-½" = 0.50	6" = 1.47

R0738H08-WTRLOG-0076

GERAGHTY & MILLER, INC.
Environmental Services

WATER SAMPLING LOG

Project/No. PA00708-ORMET

Page 4 of 6

Site Location HANNIBAL, OH

Site/Well No. SEEP # 3

Coded/ Replicate No.

Date 2/22/90

Weather Overcast 40's

Time Sampling Began 0800

Time Sampling Completed 0830

EVACUATION DATA

Description of Measuring Point (MP) Seep sample from OMDS

Height of MP Above/Below Land Surface

MP Elevation

Total Sounded Depth of Well Below MP

Water-Level Elevation

Held

Depth to Water Below MP

Diameter of Casing

Wet

Water Column in Well

Gallons Pumped/Bailed Prior to Sampling

Gallons per Foot

Gallons in Well

Sampling Pump Intake Setting (feet below land surface)

Evacuation Method Peristaltic Pump for 5 min

SAMPLING DATA/FIELD PARAMETERS

Color Pale Yellow Odor Appearance Stained Temperature 13 °F/°C

Other (specific ion; OVA; HNU; etc.) Slight Sheen

Specific Conductance, umhos/cm 5600 pH 7.77

Sampling Method and Material beaker / peristaltic pump

Constituents Sampled	Container Description From Lab X or G&M	Preservative
Same as page 1		

Remarks

Sampling Personnel STJC, JW

WELL CASING VOLUMES

GAL./FT.				
	1-¼" = 0.06	2" = 0.16	3" = 0.37	4" = 0.65
	1-½" = 0.09	2-½" = 0.26	3-½" = 0.50	6" = 1.47

Southpoint 89-1473

RUT38H08- WTRL06-0077

GERAGHTY & MILLER, INC.
Environmental Services

WATER SAMPLING LOG

Project/No. PA001108 - ORMET

Page 5 of 6

Site Location HANNIBAL, OH

Site/Well No. SEEP #1

Coded/ Replicate No. Seep #1 MS/MSD

Date 2/22/90

Weather Overcast

Time Sampling Began 0845

Time Sampling Completed 0935

EVACUATION DATA

Description of Measuring Point (MP) SEEP Samples From CMDS

Height of MP Above/Below Land Surface _____

MP Elevation _____

Total Sounded Depth of Well Below MP _____

Water-Level Elevation _____

Held _____ Depth to Water Below MP _____

Diameter of Casing _____

Wet _____ Water Column in Well _____

Gallons Pumped/Bailed Prior to Sampling _____

Gallons per Foot _____

Gallons in Well _____

Sampling Pump Intake Setting (feet below land surface) _____

Evacuation Method Peristaltic Pump

SAMPLING DATA/FIELD PARAMETERS

Color Orange-brown Odor _____ Appearance Stained Temperature 65 °F/°C

Other (specific ion; OVA; HNU; etc.) _____

Specific Conductance, umhos/cm 5200 pH 4.65

Sampling Method and Material Pyrex beaker / peristaltic pump

Constituents Sampled	Container Description From Lab X or G&M ___	Preservative
Same as page 1		

Remarks _____

Sampling Personnel JC, ST, JW

WELL CASING VOLUMES

GAL./FT.				
	1-¼" = 0.06	2" = 0.16	3" = 0.37	4" = 0.65
	1-½" = 0.09	2-½" = 0.26	3-½" = 0.50	6" = 1.47

R0738H08- WTRL06-0078

GERAGHTY & MILLER, INC.
Environmental Services

WATER SAMPLING LOG

Project/No. PA00708-ORMET

Page 6 of 6

Site Location HANNIBAL, OH

Site/Well No. SEEP #4

Coded/ Replicate No.

Date 2/22/90

Weather Sunny 40s

Time Sampling Began 0956

Time Sampling Completed 1015

EVACUATION DATA

Description of Measuring Point (MP) SEEP SAMPLE FROM CMDS

Height of MP Above/Below Land Surface

MP Elevation

Total Sounded Depth of Well Below MP

Water-Level Elevation

Held

Depth to Water Below MP

Diameter of Casing

Wet

Water Column in Well

Gallons Pumped/Bailed Prior to Sampling

Gallons per Foot

Gallons in Well

Sampling Pump Intake Setting (feet below land surface)

Evacuation Method ~~[illegible]~~ Peristaltic Pump 10 min

SAMPLING DATA/FIELD PARAMETERS

Color none Odor Appearance Clear Temperature 7 °F/°C

Other (specific ion; OVA; HNU; etc.)

Specific Conductance, umhos/cm 4600 pH 6.24

Sampling Method and Material ~~[illegible]~~ Beaker / Peristaltic Pump

Constituents Sampled	Container Description From Lab ____ or G&M ____	Preservative
Same as page 1		

Remarks Took Seep field Blank after Sampling at Trailer

Sampling Personnel ST, JC, WA

WELL CASING VOLUMES

GAL./FT.				
	1-¼" = 0.06	2" = 0.16	3" = 0.37	4" = 0.65
	1-½" = 0.09	2-½" = 0.26	3-½" = 0.50	6" = 1.47

R0738H08-WTRL06-0079

GERAGHTY & MILLER, INC.
Environmental Services

WATER SAMPLING LOG

Project/No. PA00708-OPMET

Page 6 of 7

Site Location HANNIBAL, OH

Site/Well No. SEEP # 7

Coded/ Replicate No.

Date 2/1/90

Weather

Time Sampling Began

Time Sampling Completed

EVACUATION DATA

Description of Measuring Point (MP) SEEP SAMPLE FROM CMDS

Height of MP Above/Below Land Surface

MP Elevation

Total Sounded Depth of Well Below MP

Water-Level Elevation

Held

Depth to Water Below MP

Diameter of Casing

Wet

Water Column in Well

Gallons Pumped/Bailed Prior to Sampling

Gallons per Foot

Gallons in Well

Sampling Pump Intake Setting (feet below land surface)

Evacuation Method Peristaltic Pump

SAMPLING DATA/FIELD PARAMETERS

Color

Odor

Appearance

Temperature °F/°C

Other (specific ion; OVA; HNU; etc.)

Specific Conductance, umhos/cm

pH

Sampling Method and Material Pyrex Beaker / Peristaltic Pump

Constituents Sampled	Container Description From Lab X or G&M	Preservative

Remarks

Sampling Personnel ST, JC, JW

WELL CASING VOLUMES

GAL./FT.				
	1-¼" = 0.06	2" = 0.16	3" = 0.37	4" = 0.65
	1-½" = 0.09	2-½" = 0.26	3-½" = 0.50	6" = 1.47

Southprint 89 1473

APPENDIX G

MEMORANDUM DESCRIBING HISTORICAL USAGE OF THE FORMER CONSTRUCTION MATERIAL SCRAP DUMP

ORMET CORPORATION
HANNIBAL, OHIO

In preparation for work described in Section 2.1 of the Phase II Statement of Work, a general description of the disposal activities and the types of materials that may have been placed in the Construction Material Scrap Dump (CMSD) has been completed. This is the first of three activities that will be undertaken to characterize the CMSD. Based on discussion with long-term employees and a review of available aerial photographs, it is our conclusion that the area currently designated as the CMSD received material from plant operations from about 1966 until mid-1979.

During this entire period of time, an independent contractor was conducting a salvage operation to recover recyclable and reusable items from the plant generated material. During this period, materials not recycled by the contractor were placed in the CMSD.

The following general summary of material generated at the Ormet plant during this period of time is based on discussions with plant personnel and available aerial photographs:

Furnace brick (e.g., anode furnace, lectromelt furnace, cast house furnace)

Empty drums

Wooden pallets

Petroleum coke fines and anode production scrap

Miscellaneous demolition debris (e.g., concrete, steel, wood, glass, aluminum siding, pipe, roofing material, insulating materials)

Petroleum products (e.g., hydraulic oil, motor oil, press oil, solvent)

Plant trash (e.g, paper, cardboard, packinging materials, paint cans)

Discarded electrical components (e.g., light ballasts, capacitors, circuit breakers)

Motor shop wastes (e.g., tires, brake pads, antifreeze, batteries)

Discarded mechanical components (e.g., belts, gears, hoses, valves, cable)

Discarded fugitive raw material (e.g., alumina, cryolite, anode binder pitch)

AND

Spent potliner

The salvage contractor removed selected items from the plant material for resale or recycling. Materials removed by the contractor commonly included:

Scrap steel/aluminum (including empty drums)

Drummed petroleum products

Batteries

AND

Antifreeze

In addition, combustible materials were burned at the site for volume reduction until such practice was prohibited by applicable air emission rules.

In 1979, the perimeter of the CMSD nearest to the river was pulled back onto the top of the CMSD and leveled to its current configuration. Since that time, the CMSD has not received waste material from the plant.

JDR:1/25/90

APPENDIX H

PHOTOGRAPHS AND DESCRIPTIONS FROM THE PERIMETER RECONNAISSANCE OF THE FORMER CONSTRUCTION MATERIAL SCRAP DUMP

ORMET CORPORATION
HANNIBAL, OHIO

APPENDIX H

DESCRIPTION OF PHOTOGRAPHS FROM THE PERIMETER RECONNAISSANCE OF THE CONSTRUCTION MATERIAL SCRAP DUMP

ORMET CORPORATION
HANNIBAL, OHIO

Photo 1	Wooden pallets, tires, anode blocks, rubber hoses, concrete, cable spool, drum, conduit, furnace brick, shovels, inner tubes, aluminum scrap metal, plastic jug, pop cans, clothe material, rubber belts.
Photo 2&3	Re-inforced concrete, empty metal drum, metal and plastic pipe, lumber, decomposed cans, glass, canvas coveralls.
Photo 4	Empty plastic jug, bucket lids, crushed drums, reinforced concrete.
Photo 5	Anode blocks, tire, metal scrap, crushed drums, decomposed steel buckets, plastic hose, reinforced concrete, plywood, aluminum metal, rubber tires, assorted lumber.
Photo 6	Anode blocks, re-inforced concrete, decomposed wooden box, cable, rubber mat, furnace bricks.
Photo 7	Re-inforced concrete, rubber hose, steel banding, plastic, furnace bricks.
Photo 8	Plastic sheeting, anode blocks, rubber hose, plywood, cable, insulation material, collapsed steel drum, corrugated steel sheeting, scrap lumber, scrapmetal.
Photo 9	Steel trash bin, re-inforced concrete, anode blocks, assorted lumber, rope, furnace brick, cables, decomposed metal buckets, old motor, corroded plastic lined steel drum, collapsed steel drum, boot, waste aluminum metals, old paint can.
Photo 10	4 ft. tire, crushed drum with solidified pitch, anode blocks, scrap aluminum, bucket lids, plastic lined drums, metal banding, shovel, furnace brick, assorted lumber, scrap steel canvas, rubber hose.
Photo 11	Aluminum metal, furnace brick, anode block, assorted lumber, light fixture, rubber tires, plastic sheeting, decomposed five gallon plastic buckets, collapsed steel drum, re-inforced concrete.
Photo 12	Tires, black material (possible crushed anode material or off-space anode material, rubber tires, furnace brick, re-inforced concrete, anode blocks, assorted lumber, railroad ties, corroded corrugated steel sheeting, plastic buckets, stainless steel banding, rubber hoses, plastic sheeting, shovel, crushed drum with plastic liner.
Photo 13	Corroded drum with white crystaline residue, rubber conveyor, rubber tires, re-inforced concrete, furnace brick, anode block, assorted lumber, inner tubes, steel piping, 4 inch pvc pipe, rebar, drum half filled with solidified pitch, drum with unknown contents.

Photo 14	Steel mesh, screen, air filter, assorted lumber, plywood, furnace brick, anode block, rubber hose, rubber tires, leather gloves, rubber conveyor, forklift tires, corrugated aluminum roofing and siding, black material (possible crushed anode material or off-spec anode material), crushed drums with unknown contents, scrap metal.
Photo 15	Rubber tires, anode block, assorted lumber, furnace bricks, machine shop cuttings, crushed drums, scrap metal, steel cable, rubber hose, aluminum step ladder, aluminum cart, drum full of pitch, electrical components, tin can, fork lift tires, black material (possible crushed anode material or off-spec anode material.
Photos 16	Bicycle tire, rubber hoses, furnace bricks, anode blocks, re-inforced concrete, rubber tires, stainless steel ring, steel pipes, sheet steel, rubber conveyor, steel cable, steel piping, fork lift tires, front end loader bucket, wooden pallets, scrap steel, aluminum scrap, crushed crates, shovels, 5 gallon drums with spent pot liner, corrugated pipe, drums with solidified pitch, empty steel tank.
Photos 17	Drums with solidified pitch, steel rail, rubber tires, furnace brick, broom handle, wooden crate, wooden pallets, assorted lumber, cables, rope, re-inforced concrete, crushed drums, aluminum siding, black material (possible crushed anode material or off-spec annode material), metal wire, rubber hose.
Photo 18	Re-inforced concrete, anode blocks, furnace bricks, aluminum scraps, plastic buckets, sweeper bags, wooden pallets, assorted lumber, rubber tires.
Photo 19	Furnace brick,re-inforced concrete, drums with solidified pitch, rebar, assorted lumber, grease gun, crushed drum.
Photo 20	Plastic, empty 30 gallon steel drum, rubber hose, scrap aluminum, rubber hose, rebar, gray plastic drums.
Photo 21	Gray plastic drums, black material (possible crushed anode material or off-spec annode material), rubber conveyor material, crushed drums, railroad ties, assorted lumber.
Photo 22	Gray plastic buckets, anode blocks, furnace bricks, plywood, assorted wooden pallets, wooden crates, aluminum sheeting, assorted lumber, reinforced concrete, steel I beam; rubber tires.
Photo 23	Rubber hose, furnace bricks, anode blocks, wooden pallets, assorted lumber, crushed drum labelled: Chem Therm -heat transfer product - Coastal chemical - Abbeville, Lousianna; Houston, Texas, motor oil cans, gray plastic buckets, round steel pot (?), decomposed electrical device.
Photo 24	Empty drum labelled: Chem-Therm, anode blocks, re-inforced concrete, furnace bricks, scrap metal, black material (possible crushed anode material or anode material nor meeting specifications), rubber hose, glass, plywood, wooden pallets, plastic jugs, aluminum scrap, stainless steel scrap, cable spools.
Photo 25	Gray plastic buckets, rubber conveyor, broken cable spool, scrap metal, wooden pallets, re-inforced concrete, fork lift tire.

Photo 26 River's edge of CMSD looking downriver; anode blocks, crushed steel drum, furnace brick, black material (possible crushed anode material or anode material not meeting specifications), rubber hose, shovel, threaded carbon rod, assorted lumber, gray plastic buckets.

Photograph #1

Photograph #2

Photograph #3

Photograph #4

Photograph #5

Photograph #6

Photograph #7

Photograph #8

Photograph #9 - Monitoring well 43s in lower right hand corner.

Photograph #10

Photograph #11 - Seep #2, in center of photo, marked with 2 inch x 2 inch wooden stake with surveyor's flagging.

Photograph #12

Photograph #13 - Seep #5, on left hand side of photo, marked with surveyor's flagging.

Photograph #14

Photograph #15 - Seep #6, on left hand side of photo, surveyor's flagging attached to branch.

Photograph #16

Photograph #17 - Seep #7, in center of photo, marked with surveyor's flagging.

Photograph #18

Photograph #19

Photograph #20 - 004 backwater area in right center of photo.

Photograph #21 - Seep #3, in center - right hand side of photo, marked with surveyor's flagging

Photograph #22 - Seep #3, in center - left hand side of photo, marked with 2 inch x 2 inch wooden stake.

Photograph #23

Photograph #24

Photograph #25

Photograph #26

APPENDIX I

PHOTOGRAPHS AND DESCRIPTIONS OF THE FORMER CONSTRUCTION MATERIAL SCRAP DUMP TEST PIT MATERIALS

ORMET CORPORATION
HANNIBAL, OHIO

APPENDIX I

DESCRIPTION OF THE CONSTRUCTION MATERIAL SCRAP DUMP TEST PITS MATERIALS

ORMET CORPORATION
HANNIBAL, OHIO

Test Pit (CMSD) #1

Depth Interval in Feet	Photo Description
0-2	Possible potliner material, anode material, belt, anode blocks, metal pipe, aluminum scrap, rubber hose, wood, soil material.
2-4	Furnace brick, pieces of anode block, gray material (mixture of alumina & cryolite), soil, wood, rubber hose, furnace brick.
4-6	Large amount of furnace bricks, rubber hose, wood, crushed anode block, compressed former drum, re-inforced concrete, anode block, plastic, gray material (mixture of alumina & cryolite), soil material, sheet metal, steel cable, rope.
6-8	Soil material, crushed anode material, furnace brick, wood, collapsed drum, canvas, metal pipe, re-inforced concrete, metal railroad crossing signs, soil material, rubber hose, furnace brick.
8-10	Mostly gray material (mixture of alumina & cryolite), core sweepings associated with potliner, furnace bricks, plastic, rubber hose.
10-12.5	Soil material, gray material (mixture of alumina & cryolite), stainless steel metal cuttings, rubber conveyor belt, (no photo).
12.5-15	Soil material, stainless steel metal cuttings, plywood, metal pipes, rubber hose, metal strapping, gray material (mixture of alumina & cryolite), (no photo).

Test Pit (CMSD) #2

0-2	Soil, re-inforced concrete, furnace bricks, scrap metal, crushed anode blocks.
2-4	Soil, wood scrap, rubber hose, metal pipe, re-inforced concrete, crushed drum remnants, insulation, furnace brick.
4-6	Soil, rubber hose, fork lift tires, re-inforced concrete, scrapwood, plastic.
6-8	Soil, rubber hose, furnace brick (starting at ~7 ft.), partial anode blocks, plastic, rags.

8-10	Mostly furnace bricks, plastic, wire, assorted wood, wire, minor soil, gray material (mixture of alumina & cryolite).
10-13	Plastic, mostly furnace bricks, lumber, rubber hose, stainless steel scraps, soil, (no photo).
13-15	Furnace bricks, lumber, plastic, stainless steel scraps, (no photo).

Test Pit (CMSD) #3

0-2	Soil, furnace bricks, pipe, assorted lumber, rebar, re-inforced concrete, plastic.
2-4	Furnace bricks, soil, glass, steel pipes, assorted lumber, pieces of anode blocks, rubber hose.
4-6	Soil, furnace bricks, assorted lumber, conveyor belt, wire.
6-8	Mostly furnace bricks, soil, rubber hose, re-inforced concrete, possible potliner.
8-10	Furnace bricks, soil, rubber hose, re-inforced concrete, cable, insulation.
10-12	Furnace bricks, soil, rubber hose, stainless steel strapping, wire, assorted lumber.
12-15	Furnace bricks, soil, hoses, belts, wood, fragmented pallet, gray material (mixture of alumina & cryolite) in bottom 2 ft.

Test Pit (CMSD) #4

0-2	Soil, furnace bricks, concrete, brick fragments, steel pipe, tar paper, rubber hose.
2-4	Soil, mostly furnace bricks, concrete, rubber hose, steel pipe.
4-6	Mostly furnace bricks, soil, steel pipe, some lumber, rubber hose.
6-8	Mostly furnace bricks, plastic, wood, bad anode mixture, rubber hose, (no photo).
8-10	Mostly furnace bricks, re-inforced concrete, plastic, gray soil.
10-12	Rubber hose, wood, tile, furnace brick, fiberglass, alumina/reacted ore mixture.
12-15	Mostly soil (lite gray), rubber hose, small amount of wood.

CMSD # 1 0-2 ft.

CMSD # 1 2-4 ft.

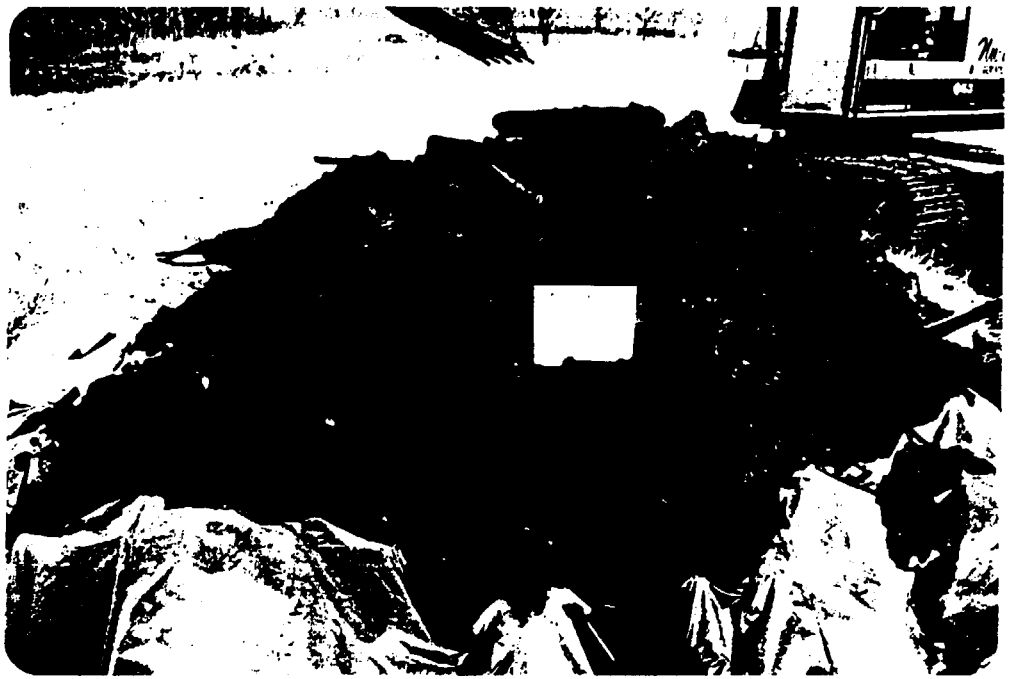

CMSD # 1 4-6 ft.

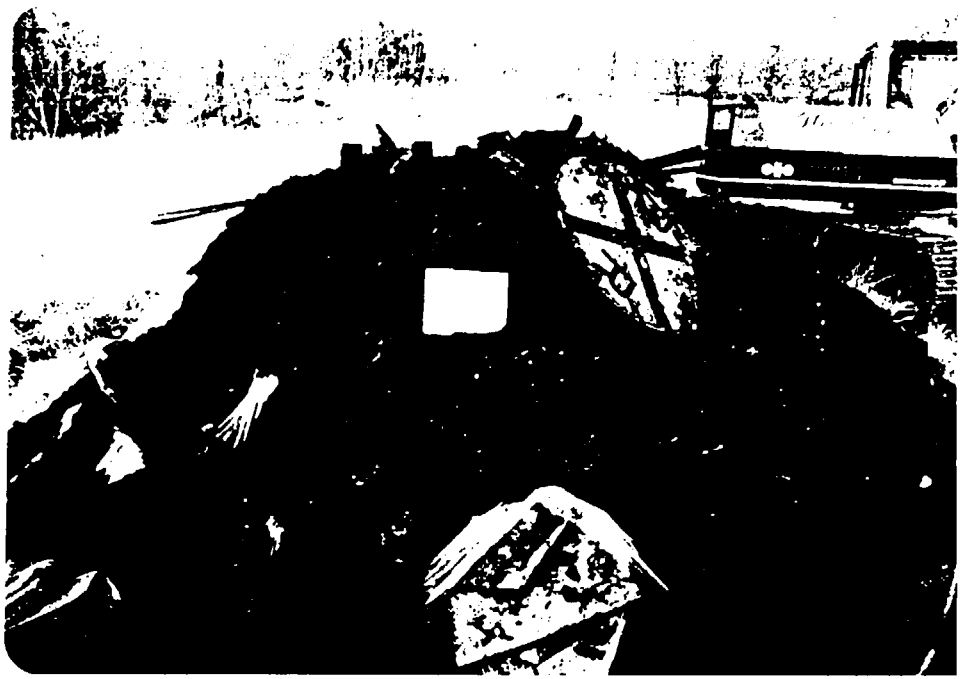

CMSD # 1 6-8 ft.

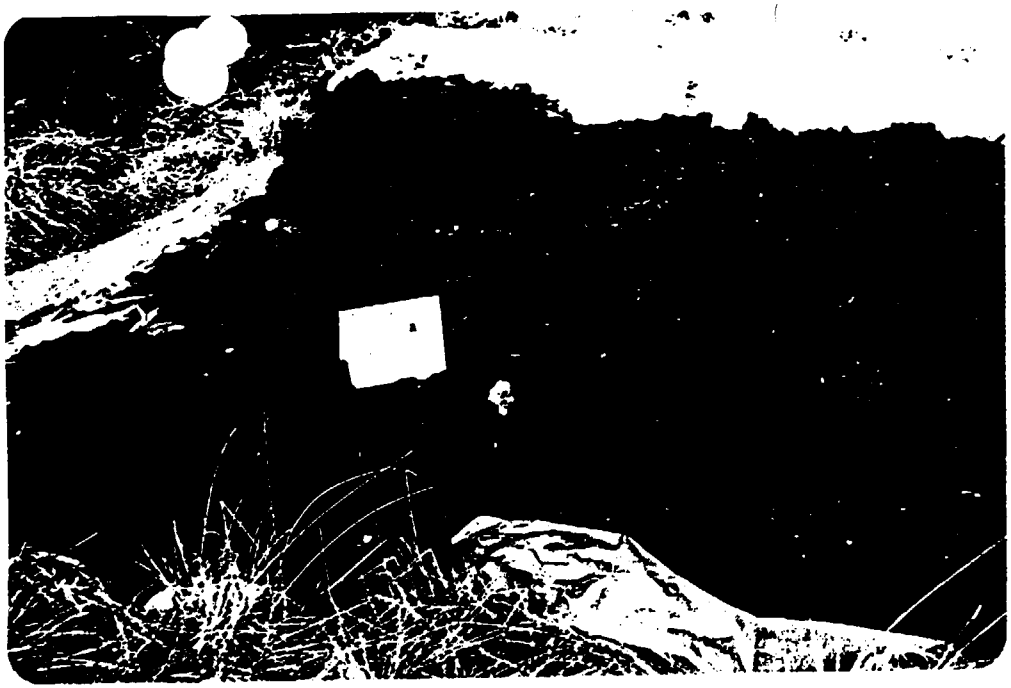

CMSD # 1 8-10 ft.

CMSD # 2 0-2 ft.

CMSD # 2 2-4 ft.

CMSD # 2 4-6 ft.

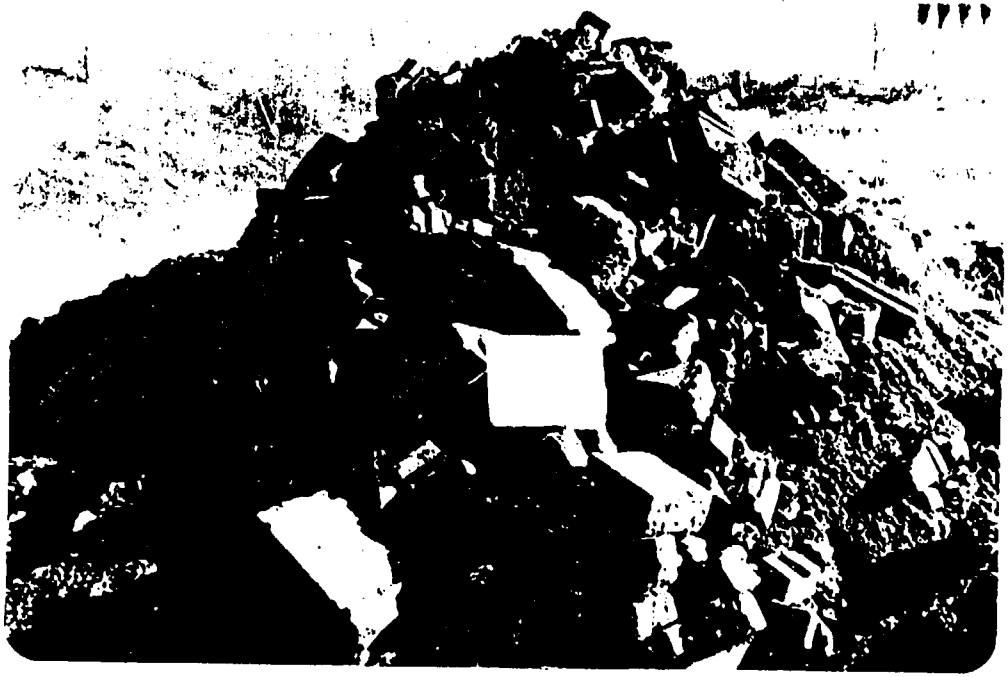

CMSD # 2 6-8 ft.

CMSD # 2 8-10 ft.

CMSD # 3 0-2 ft.

CMSD # 3 2-4 ft.

CMSD # 4 8-10 ft.

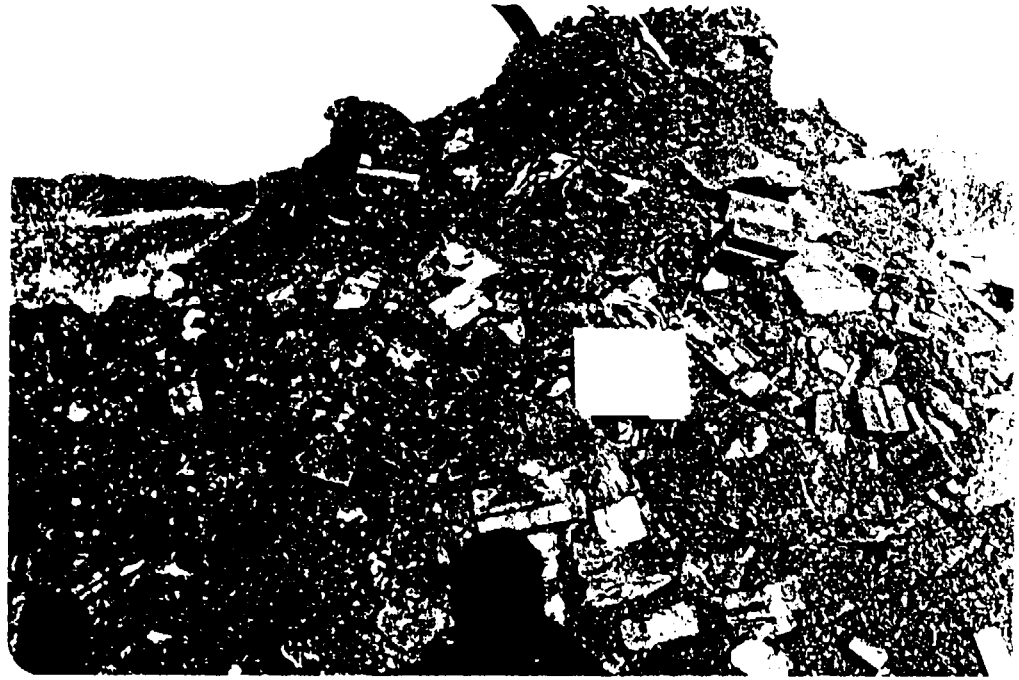

CMSD # 4 10-12 ft.

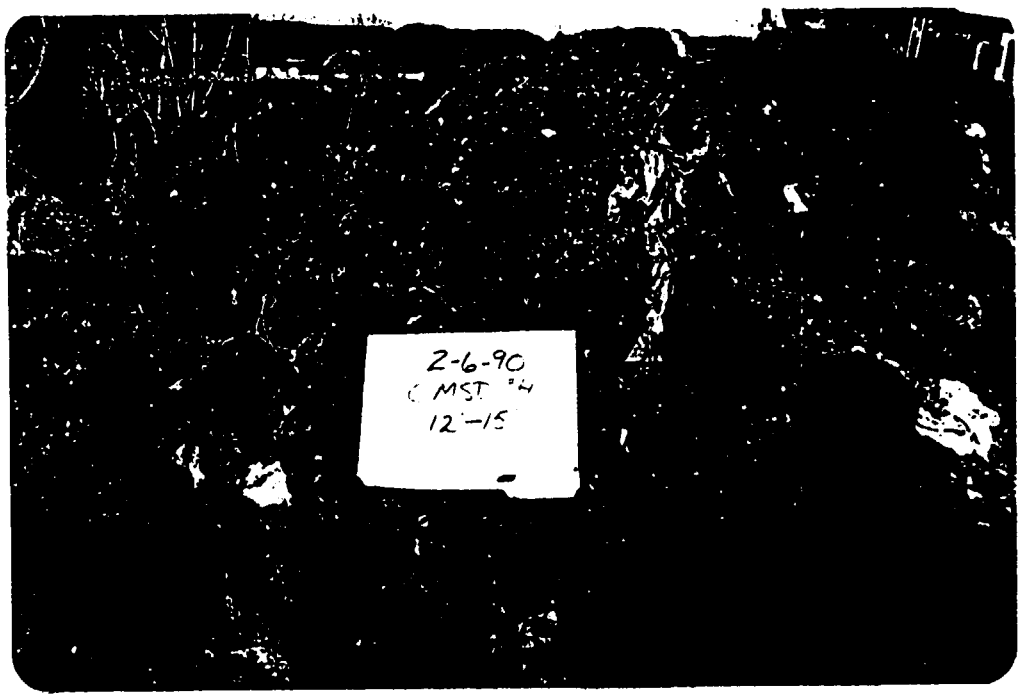

CMSDD # 4 12-15 ft.

CMSD # 3 4-6 ft.

CMSD # 3 6-8 ft.

CMSD # 3 8-10 ft.

CMSD # 3 10-12 ft.

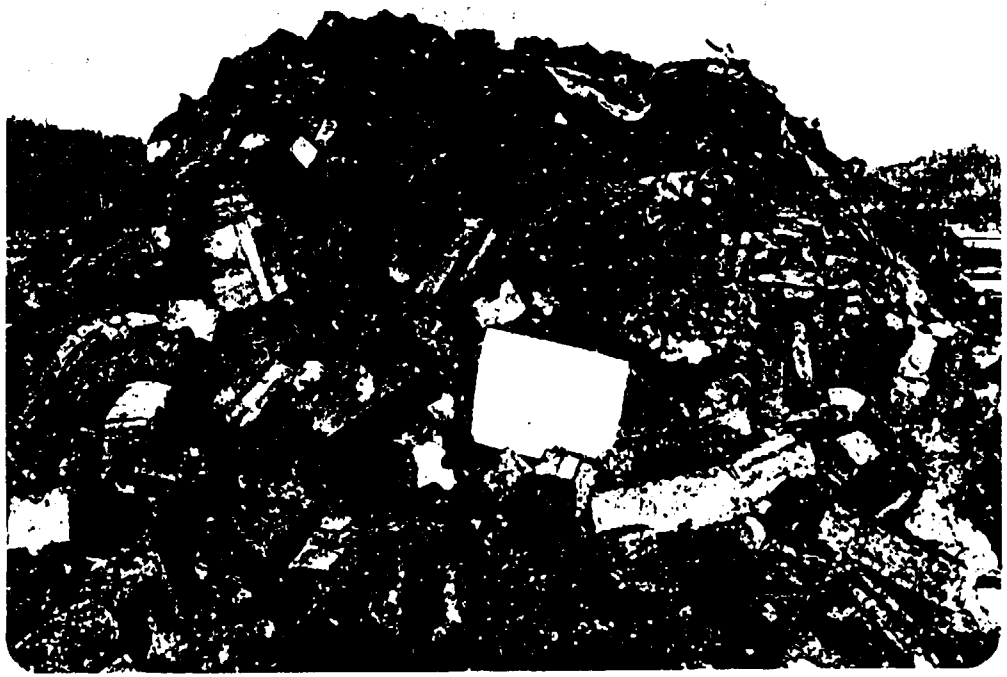

CMSD # 3 12-15 ft.

CMSD # 4 0-2 ft.

CMSD # 4 2-4 ft.

CMSD # 4 4-6 ft.

APPENDIX J

SOIL SAMPLE DESCRIPTIONS FOR THE CARBON RUNOFF AND DEPOSITION AREA SAMPLING GRID

ORMET CORPORATION
HANNIBAL, OHIO

R0738H08 - B0RL06-0053

GERAGHTY & MILLER, INC.
Ground-Water Consultants

DAILY LOG

Well(s) CRA Project/No. ORMET/R0738H08 Page 1 of 8

Site Location HANNIBAL, OHIO

Prepared By J. NASER & J. CHEPEGA

Date/Time	Description of Activities
5-25-88	
SAMPLE LOCATION	SAMPLE DESCRIPTION
CRA-1	Silt (60%); Clay (30-35%); Sand (5-10%), fn., well rd.;
	moist; dk. grey to med. brown;
CRA-2	Clay (60%); Humus (35%); Gravel (5%), well rd.;
	med. brown; moist; loose; plant fragments
CRA-3	Humus (80%); Clay (15%); Sand (5%); dk. grey to
	med. brown; damp
CRA-4	Silty clay (85-95%); Humus (5-10%); damp; med.
	brown; Humus - dk. brown to black w/ large frag.
CRA-5	Silty clay with trace sand and well rd. gravel;
	med. brown; dry to damp
CRA-6	Humus (90%); Carbon material (10%); mottled brown/
	black; trace of well rounded gravel; plant roots;
	dry to damp; carbon depth - .4'
CRA-7	Clay (65%); Humus (35%); Carbon material;
	trace of sub. rd. gravel; dry; plant frag.; med.
	to dk. brown; carbon depth - 0.0'
CRA-8	Silty Clay and humus (70%); Carbon material (30%);
	dk. grey / black; very moist; dense; trace clay and
	plant matter; carbon depth - .9'
CRA-9	Carbon material (50-55%); Clay (30%); Sand (10-15%);
	moist; uniform dk. grey; oily sheen & odor;
	Carbon depth - 1.0'.

G&M Form 02 6-86 Southprint 87-1715

GERAGHTY & MILLER, INC.
Ground-Water Consultants

DAILY LOG

Well(s) _____ Project/No. ORMET / R0737H07 Page 2 of 8

Site Location HANNIBAL, OHIO

Prepared By J. NASER / J. CHEPEGA

Date/Time	Description of Activities
CRA-10	Clay (55%); Humus (40%); Gravel (5%), sub. rd. to sub. ang.; plant material; clay - med. brown; humus - dk. grey; dry to damp
CRA-11	Clay (60%); Humus (40%); trace sub. rd. gravel; Humus - dk. grey/black; clay - med. brown; trace roots; damp.
CRA-12	Silt, clay, and fn. sand (90%); Humus (10%); grey to dk. brown; root fragments; damp; trace of well rd. gravel.
CRA-13	Clay (70%); Dk. grey Humus (20%); Carbon material (10%); damp; plant fragments; dk. brown; Carbon depth - .5'
CRA-14	Carbon Material (50%), med. grey w/white specs; Sand (50%), med. brown; damp; root fragments; Carbon depth - 3.0'
CRA-15	Clay (75%); Humus (18%); Fine Sand (5%); Gravel (2%); overall brown; humus is dk. brown to black; some plant fragments.
CRA-16	Clay (95%); Humus (5%); brown; trace pebbles; rare plant frag.; damp
CRA-17	Soil (clay, humus, gravel, fn. sand, and plant frag.); med. brown; slightly damp.

BORLOG-0053 (CONT.)

GERAGHTY & MILLER, INC.
Ground-Water Consultants

DAILY LOG

Well(s) _____ Project/No. ORMET/R0731H07 Page 3 of 8

Site Location HANNIBAL, OHIO

Prepared By J. NACER / J. CHEPEGA

Date/Time	Description of Activities
	CRA-18 Soil (clay, humus & plant frag.) - 80%; Carbon Material (20%); dk. brown w/black zones; dry to damp; carbon depth - .5'
5-26-88	CRA-19 Silt (50-60%); Clay (20%); V. Fn. Sand (25%); dk. brown; moist; plant frag.
	CRA-20 Clay, Sand, and Silt with trace of carbon (?) material; med. to dk. brown; damp; root fragments; carbon Depth: 1.0'
	CRA-21 Sand (50%); Silt (30-40%); Gravel (10-15%), fn, sub. rd.; lt. brown; moist; plant frag.
	CRA-22 Clay (40%); Carbon Material (40-45%); Silt (10-20%); root frags.; very moist; trace fn. gravel; carbon thickness - 1.0'
	CRA-23 Sand (50%); Silt (20-25%); Carbon Material (25%); trace sub. ang., med. gravel; brown/black; damp; plant frags; Carbon Depth: 1.5'
	CRA-24 Clay (65%); Humus and Clay (35%); lt. to dk. brown; damp; plant and root frag.
	CRA-25 Carbon Material (100%); plant frag.; black; damp; carbon depth - 3.7'; underlying soil is clay
	CRA-26 Carbon Material (80%); Clayey Material (20%); damp; black; plant & root frags.; carbon depth - 2.4'; underlying soil is clay

GERAGHTY & MILLER, INC.
Ground-Water Consultants

DAILY LOG

Well(s) _____ Project/No. OFMET / R073H08 Page 4 of 8

Site Location HANNIBAL, OHIO

Prepared By J. NASER / J. CHEPEGA

Date/Time	Description of Activities
CRA-27	Clay (80%); Silt (20%); damp; med. brown; plant frags.; trace carbon material (?)
CRA-28	Silty Clay (100%); med. brown; damp; plant frags.
CRA-29	Silty Clay (90%); Carbon Material (10%); med. brown; damp; plant frags.; carbon depth - .3'; underlying soil is clay
CRA-30	Carbon Material (100%); damp; black; plant frags.; carbon depth - 3.55'; underlying soil is clay
CRA-31	Carbon Material (100%); damp; black; plant frags.; carbon depth - 5.2'; underlying soil is silty clay
CRA-32	Carbon Material (100%); damp; black; plant frags.; carbon depth - 3.7'; underlying soil is clay
CRA-33	Carbon Material (100%); moist; black; plant frags.; carbon depth - 2.5'; underlying soil is gray clay
CRA-34	Carbon Material (100%); moist; black carbon depth - 1.4'; underlying soil is sand and gravel
CRA-35	Clay (65%); Carbon Material (30-35%); trace fn. sand; black/brown; moist; carbon depth - .5'; underlying soil is sand and gravel
CRA-36	Clayey Silt (100%); trace fn. sand; dk. brown; moist; plant frags.
CRA-37	Clayey Silt (50%); Carbon Material (50%); dk. brown; damp; plant frags; carbon depth - 3.6'; underlying soil is clay

GERAGHTY & MILLER, INC.
Ground-Water Consultants

BORL06-0053 (CONT.)

DAILY LOG

Well(s) _____ Project/No. ORMET/R0738H08 Page 5 of 8

Site Location HANNIBAL, OHIO

Prepared By J. NACER/J. CHEPEGA

Date/Time	Description of Activities
CRA-38	Silty Soil (100%); med. brown; damp; plant and root frags.
CRA-39	Silty Sand (90-95%); Carbon Material (5-10%); med. brown; damp; trace fn. gravel and root material; Carbon depth - 1.0'; underlying soil is clay
CRA-40	Sandy Silt (100%); med. brown; trace carbon (?) material; damp; root material
CRA-41	Sandy Clayey Silt (100%); trace carbon (?) material; damp; root material
CRA-42	Clay (100%); trace fn. sand; lt. brown; damp; trace gravel and root frags.
CRA-43	Carbon Material (100%); damp; black; root frags.; depth of carbon - .9'; underlying soil is clay
CRA-44	Carbon Material (100%); damp; black; root frags.; carbon depth - 3.5'; underlying soil is clay
CRA-45	Carbon Material (100%); dk. grey; damp; root frags.; carbon depth - 2.3'; underlying soil is sand
CRA-46	Carbon Material (100%); dk. grey; dry; root material; carbon depth - 1.4'; underlying soil is clay
CRA-47	Carbon Material (100%); dk. grey; dry; root material; carbon depth - 2.7'; underlying soil is clay
CRA-48	Carbon Material (100%); black; damp; root material; carbon depth - 2.0'; underlying soil is clay

GERAGHTY & MILLER, INC.
Ground-Water Consultants

DAILY LOG

Well(s) _____ Project/No. ORMET/R0738H08 Page 6 of 8

Site Location HANNIBAL, OHIO

Prepared By J. NASER/J. CHEPEGA

Date/Time	Description of Activities
CRA-49	Top .5': Carbon Material (100%); black
	Bottom .1': Clay, med. brown, damp, root frags.
	Carbon depth - 1.6'; underlying soil is clay
CRA-50	Carbon Material (100%); damp; black; root frags.
	Carbon depth - 2.1'; underlying soil is clay
CRA-51	Carbon Material (100%); damp; black; root frags.
	Carbon depth - 1.2'; underlying soil is clay
CRA-52	Carbon Material (70%); Med. Brown Clay (30%);
	damp; plant & root frags.; carbon depth - 1.1';
	underlying soil is clay
CRA-53	Carbon Material (45%), black; Clay (55%), brown;
	damp; plant & root frags.; carbon depth - .7';
	underlying soil is clay
CRA-54	Top .2': Black carbon material
	Bottom .4': Brown silty clay; damp; root frags.
	Carbon depth - .2' underlying soil is silty clay
CRA-55	Not Accessible. Heavy brambles
CRA-56	Silty Clay (100%); damp; med. brown; root fragments
CRA-57	Silty Clay (100%); damp; med. brown; root fragments
CRA-58	Silty Clay (85%); Carbon Material (15%); med.
	brown; root frags.; trace sand
	Carbon depth - .4'; underlying soil is clay

BORLOG-0053 (CONT.)

GERAGHTY & MILLER, INC.
Ground-Water Consultants

DAILY LOG

Well(s) _____ Project/No. ORMET/R0737H07 Page 7 of 8

Site Location HANNIBAL, OHIO

Prepared By J. NASER/J. CHEFEGA

Date/Time	Description of Activities
CRA-59	Sand (70%) with gravel, silt and root fragments;
	damp; grey to brown;
CRA-60	.2' black Carbon Material; .3' silty clay, med.
	brown, damp;
CRA-61	Silty Clay (100%); med. brown; damp; roots
CRA-62	Not Accessible. Heavy brambles
CRA-63	"
CRA-64	"
CRA-65	Silty Clay (100%); med. brown; damp; roots
CRA-66	Silty Clay (100%); med. brown; damp; roots
CRA-67	Carbon Material (100%); black; moist; roots
	Carbon depth - 1.2'; underlying soil is clay
CRA-68	Soil (70% sand, with clay and silt); damp; root frags.;
	trace of carbon; carbon depth - .2'; underlying
	soil is sand and gravel
CRA-69	Sand (80%), fn. to med., sub. rd.; Silt (15%); Carbon
	Material (5%); dry; grey brown; roots
	Carbon depth - .1'; underlying soil is sand & gravel
CRA-70	Carbon Material (100%); black; damp; roots
	Carbon depth - .9'; underlying soil is clay
CRA-71	Silty Clay (100%); med. brown; damp; roots
CRA-72	Not Accessible. Dense brambles

BORLOG-0053 (CONT.)

GERAGHTY & MILLER, INC.
Ground-Water Consultants

DAILY LOG

Well(s) _____ Project/No. ORMET / R0732H07 Page 8 of 8

Site Location HANNIBAL, OHIO

Prepared By J. NASER / J. CHEFEGA

Date/Time	Description of Activities
CRA-73	Clay-rich soil (100%); mod. brown; damp; roots
CRA-74	Clay-rich soil (100%); mod. brown; damp; roots

G&M Form 02 6-86 Southprint 87-1715

K0738408-BOKL06-0054 CARBON KNOTT TREES HAND AUGER

GERAGHTY & MILLER, INC.
Ground-Water Consultants

SAMPLE/CORE LOG

Boring/Well #75 Project/No. PA00708-ORMET Page 1 of 1

Site Location HANNIBAL, OH Drilling Started 2/6/90-13:55 Drilling Completed 2/6/90-14:05

Total Depth Drilled — feet Hole Diameter — inches Type of Sample/Coring Device BUCKET AUGER

Length and Diameter of Coring Device N/A Sampling Interval Variable feet

Land-Surface Elev. ____ feet ☐ Surveyed ☐ Estimated Datum ____

Drilling Fluid Used N/A Drilling Method N/A

Drilling Contractor N/A Driller N/A Helper N/A

Prepared By TAYLOR/CAMPBELL Hammer Weight — Hammer Drop — inches

COMMENT: Boring located immediately adjacent to outflow stream.

Sample/Core Depth (feet below land surface) From	To	Core Recovery (feet)	Time/Hydraulic Pressure or Blows per 6 inches	Sample/Core Description
0.0	0.5'	—	—	SILTY SOIL: FINE SAND-SILT (75%), terrigenous composition; CARBON PARTICULATES (15%), silt- to fine-sand sized, appear as fine vitreous black sediment with conchoidal fracture; WOODY ORGANIC MATTER/ROOTS (10%); LOW BULK DENSITY; VERY SLIGHTLY MOIST; V. LOW PLASTICITY; Very dark brown to black
0.5	1.0'	—	—	FINE SAND-SILT (85%), terrigenous composition; CARBON PARTICULATES (10%), silt- to fine sand-sized, appears as above; WOODY ORGANIC MATTER/ROOTS (5%); MOIST; LOW TO MEDIUM BULK DENSITY.
1.0	1.5'	—	—	SAND (95%), fine- to medium-grained; CARBON PARTICULATES (≤5%), as described above; ORGANIC MATTER (1-2%); MOIST
1.5	2.0'	—	—	SAND (85%), fine- to medium-grained; CLAY (5-10%), slightly to moderately plastic/sticky, medium brown; LEAFY ORGANIC MATTER (5%); VERY MOIST TO WET; MEDIUM TO HIGH BULK DENSITY

Southprint 87-1718

R0738H08-BORLOG-0055

CARBON RUNOFF AREA
HAND AUGER

GERAGHTY & MILLER, INC.
Ground-Water Consultants

SAMPLE/CORE LOG

Boring/Well #76 Project/No. PA00708 - ORMET Page 1 of 1

Site Location HANNIBAL, OH Drilling Started 2/6/90-13:30 Drilling Completed 2/6/90-13:50

Total Depth Drilled N/A feet Hole Diameter N/A inches Type of Sample/Coring Device BUCKET AUGER

Length and Diameter of Coring Device N/A Sampling Interval Variable feet

Land-Surface Elev. _____ feet ☐ Surveyed ☐ Estimated Datum _____

Drilling Fluid Used N/A Drilling Method N/A

Drilling Contractor N/A Driller N/A Helper N/A

Prepared By TAYLOR / CAMPBELL Hammer Weight _____ Hammer Drop _____ inches

Sample/Core Depth (feet below land surface) From	To	Core Recovery (feet)	Time/Hydraulic Pressure or Blows per 6 inches	Sample/Core Description
				SILTY SOIL:
0.0	0.4'	—	—	FINE SAND-SILT (60%), terrigenous composition;
				CARBON PARTICULATES (20-25%), appears as fine (silt-sized) vitreous
				black sediment intermixed with terrigenous
				sand/silt; WOODY ORGANIC MATTER (15-20%);
				low bulk density; highly rooted; slightly moist;
				very low plasticity, very dark brown to black
0.4	1.0'	—	—	SAND (80%), medium- to coarse-grained, sub-
				angular to subround; GRAVEL (15%), fine, rounded;
				SILT/CLAY (≤ 5%), moderately plastic, slightly
				sticky; moist; overall medium-orange-brown
				color; increased bulk density over above interval
1.0	1.5'	—	—	Same as above, but with increased
				moisture content; wet
1.5	2.0'	—	—	SAND (75%), medium- to coarse-grained;
				GRAVEL (10-15%), fine, subrounded; CLAY
				(10-15%), slightly to moderately plastic,
				slightly sticky; moist; ~~moderate~~ medium
				bulk density.

Southpoint 87-1719

R0738H08-BUKL06-0006

CARBON RUNOFF AREA
HAND AUGER

GERAGHTY & MILLER, INC.
Ground-Water Consultants

SAMPLE/CORE LOG

Boring/Well #77 Project/No. PA00708 - ORMET Page 1 of 1

Site Location HANNIBAL, OH Drilling Started 2/6/90 - 13:00 Drilling Completed 2/6/90 - 13:15

Total Depth Drilled N/A feet Hole Diameter N/A inches Type of Sample/Coring Device BUCKET AUGER

Length and Diameter of Coring Device N/A Sampling Interval ~~N/A~~ Variable feet

Land-Surface Elev. _____ feet ☐ Surveyed ☐ Estimated Datum _____

Drilling Fluid Used N/A Drilling Method N/A

Drilling Contractor N/A Driller N/A Helper N/A

Prepared By TAYLOR/CAMPBELL Hammer Weight — Hammer Drop — inches

Comment: Boring site located on access road adjacent to construction materials Dump site.

Sample/Core Depth (feet below land surface) From	To	Core Recovery (feet)	Time/Hydraulic Pressure or Blows per 6 inches	Sample/Core Description
0	2.0'	—	—	Sandy construction fill/road bed: sand/silt (40%), medium brown, intermixed with assorted construction materials including fire brick, plastic, debris, pipe.
2.0	2.4'	—	—	Sandy dark brown soil, extensively rooted with intermixed woody organic debris, low bulk density, no plasticity, not sticky, slightly moist
2.4	3.0	—	—	Sand (80%), medium- to coarse-grained; SILT/CLAY (15-20%), medium brown, slightly to moderately plastic, not sticky; GRAVEL (2-5%), fine, rnd; Saturated
2.4	3.5'			Same as above

Southprint 87-1718

KUTSMUD-BORLOG-DOST

GERAGHTY & MILLER, INC.
Ground-Water Consultants

SAMPLE/CORE LOG

Boring/Well #78 Project/No. PA00708-02WMET Page 1 of 1

Site Location HANNIBAL, OH Drilling Started 2/6/90 15:40 Drilling Completed 2/6/90 15:50

Total Depth Drilled N/A feet Hole Diameter N/A inches Type of Sample/Coring Device BUCKET AUGER

Length and Diameter of Coring Device N/A Sampling Interval VARIABLE feet

Land-Surface Elev. _____ feet ☐ Surveyed ☐ Estimated Datum _____

Drilling Fluid Used N/A Drilling Method N/A

Drilling Contractor N/A Driller N/A Helper N/A

Prepared By TAYLOR/CAMPBELL Hammer Weight — Hammer Drop — inches

Sample/Core Depth (feet below land surface) From	To	Core Recovery (feet)	Time/Hydraulic Pressure or Blows per 6 Inches	Sample/Core Description
0.0	0.5'	—	—	SAND (75%) m-very coarse grained;
				heterogeneous composition; GRAVEL (15-20%),
				fine; ROOTED ORGANIC MATTER (5-10%);
				Gray to medium brown, WET TO SATURATED
0.5	1.0'	—	—	GRAVEL (30-40%) fine; SAND (30%), ~~fine~~ coarse-
				to medium-grained; CARBON FRAGMENTS,
				medium grained, appear as black vitreous
				fragments with conchoidal fracture. SATURATED
1.0	1.5'	—	—	GRAVEL (70%), fine; SAND (30%), medium to
				very coarse-grained; saturated, black
				color - sludgy appearance with sheen;
				strong hydrocarbon odor (OVA up to 2.5 ppm)
1.5	2.0'	—	—	SAME AS ABOVE, local green patches,
				incedescent with color play (product?)
				strong hydrocarbon odor when infilling
				hole, possesses high surface tension and sheen.
2.0	5.0'	—	—	SAME AS ABOVE
5.0	6.0'	—	—	CLAY (100%), greenish-gray, very
				plastic, saturated, no hydrocarbon odor.

Southprint 87-1718

GERAGHTY & MILLER, INC.
Environmental Services

SAMPLE/CORE LOG

Boring/Well #-9 Project/No. FA000708-ORMET Page 1 of 1

Site Location HANNIBAL, OH Drilling Started 2/6/90 16:00 Drilling Completed 2/6/90 16:10

Total Depth Drilled N/A feet Hole Diameter N/A inches Type of Sample/Coring Device BUCKET AUGER

Length and Diameter of Coring Device N/A Sampling Interval VARIABLE feet

Land-Surface Elev. _____ feet ☐ Surveyed ☐ Estimated Datum _____

Drilling Fluid Used N/A Drilling Method N/A

Drilling Contractor N/A Driller N/A Helper N/A

Prepared By TAYLOR/CAMPBELL Hammer Weight — Hammer Drop — inches

Sample/Core Depth (feet below land surface) From	To	Core Recovery (feet)	Time/Hydraulic Pressure or Blows per 6 Inches	Sample/Core Description
0.0	0.5'	—	—	GRAVEL (60%), medium, rounded;
				SAND (35%), medium to coarse-grained,
				terrigenous composition; SILT/CLAY (5%),
				v. slightly plastic; Most, upper horizon
				rooted with thin layer of dark brown
				silty, topsoil
0.5	1.5'	—	—	Same as above, saturated @ 0.61' depth.
				CARBON PARTICULATE (2-5%), appear as
				fine to medium grained fragments with
				black vitreous, conchoidal fracture;
				Slight hydrocarbon odor, black,
				saturated
1.5	2.0'	—	—	GRAVEL (60%) medium to coarse, rounded;
				SAND (35%), coarse to very coarse;
				CARBON PARTICULATES (5%), appear as
				above; Saturated, hydrocarbon smell,
				general black appearance
2.0	3.0'	—	—	SAME AS ABOVE but no CARBON
				PARTICULATES
3.0	4.0'	—	—	Clayey black sludge, very saturated,

Southprint 89-1257

R0738H08-BORLOG-0059

CARBON RUNOFF AREA
HAND AUGER

GERAGHTY & MILLER, INC.
Ground-Water Consultants

SAMPLE/CORE LOG

Boring/Well #80 Project/No. PA00708-ORMET Page 1 of 2

Site Location HANNIBAL, OH Drilling Started 2/6/90-14:10 Drilling Completed 2/6/90-14:25

Total Depth Drilled N/A feet Hole Diameter N/A inches Type of Sample/Coring Device BUCKET AUGER

Length and Diameter of Coring Device N/A Sampling Interval Variable feet

Land-Surface Elev. _____ feet ☐ Surveyed ☐ Estimated Datum _____

Drilling Fluid Used N/A Drilling Method N/A

Drilling Contractor N/A Driller N/A Helper N/A

Prepared By TAYLOR/CAMPBELL Hammer Weight ____ Hammer Drop ____ inches

COMMENT: BORING located within 4 ft of outflow stream.

Sample/Core Depth (feet below land surface) From	To	Core Recovery (feet)	Time/Hydraulic Pressure or Blows per 6 inches	Sample/Core Description
0.0	0.5'	—	—	SILTY SOIL: FINE SAND/SILT (70%), terrigenous composition; CARBON PARTICULATES (20%), silt- to fine-sand-sized, appear as fine vitreous black sediment with conchoidal fracture; WOODY/LEAFY ORGANIC MATTER (10%), includes roots; Dark Brown-Black; slightly moist, low bulk density, no plasticity
7 0.5	1.0'	—	—	SAND (80%), fine- to very fine; CARBON PARTICULATES (10%), as described above; CLAY (5%), slightly to moderately plastic; ROOTED/WOODY ORGANIC MATTER (5%); overall color = medium dark to blackish brown; MOIST TO VERY MOIST; MEDIUM BULK DENSITY
1.0	1.4'	—	—	SAND (80%), fine to very fine; CARBON PARTICULATES (10%), as described above; CLAY (5%), slightly to moderately plastic; LEAFY ORGANIC MATTER (5%); GRAVEL (R), fine; MOIST, local thin horizons of concentrated CARBON PARTICULATES.
				— CONTINUED —

Southpoint 87-1718

CARBON RUNOFF AREA
HAND AUGER

GERAGHTY & MILLER, INC.
Ground-Water Consultants

SAMPLE/CORE LOG (Cont.d)

Boring/Well #80

Prepared By TAYLOR/CAMPBELL

Sample/Core Depth (feet below land surface) From	To	Core Recovery (feet)	Time/Hydraulic Pressure or Blows per 6 inches	Sample/Core Description
1.4	2.0'	—	—	SAND (90%), overall fine-to medium-grained, locally medium- to coarse-grained; CLAY (5% -10%), slightly plastic; GRAVEL (Fe), fine; overall color = mottled dark gray and medium brown; WET
2.0	2.5'	—	—	SAND (90%), medium- to coarse-grained; CLAY (5%) GRAVEL (5%), fine; Gray color banding intermixed with medium orange-brown; HYDROCARBON ODOR DETECTED

K0738H05-BORLOG-0060

GERAGHTY & MILLER, INC.
Ground-Water Consultants

SAMPLE/CORE LOG

Boring/Well #81 Project/No. PA000708-ORMET Page 1 of 31

Site Location HANNIBAL, OHIO Drilling Started 2/6/90-15:20 Drilling Completed 15:35

Total Depth Drilled — feet Hole Diameter — inches Type of Sample/Coring Device BUCKET AUGER

Length and Diameter of Coring Device N/A Sampling Interval VARIABLE feet

Land-Surface Elev. ____ feet ☐ Surveyed ☐ Estimated Datum ____

Drilling Fluid Used N/A Drilling Method N/A

Drilling Contractor N/A Driller N/A Helper N/A

Prepared By TAYLOR/CAMPBELL Hammer Weight — Hammer Drop — inches

COMMENT: ADJACENT TO OUTFLOW STREAM

Sample/Core Depth (feet below land surface) From	To	Core Recovery (feet)	Time/Hydraulic Pressure or Blows per 6 Inches	Sample/Core Description
0.0	0.5'	—	—	SAND (60%), fine to medium-grained; ferrigenous
0.5				CARBON PARTICULATES (30-35%), appear as
				fine vitreous fragments with conchoidal fracture,
				large carbon fragment also noted locally,
				GRAVEL (5-10%), fine, rounded to subrounded,
				ferrigenous-quartzose composition; CLAY (5-2%,
				WET) dark brown to black
0.5'	1.5'	—	—	SANDY-SILT (90%), fine, intermixed carbon
				& ferrigenous; CLAY (5-10%), slightly
				plastic, very saturated, strong hydro-
				carbon odor; black-sludgy appearance
1.5	2.0'	—	—	SAME AS ABOVE, perhaps increase in
				clay content, strong hydrocarbon odor,
				very saturated, black sludgy appearance
2.0'	3.0'	—	—	Clayey SLUDGE, black with sheen/
				odor, play, very saturated, strong
				hydrocarbon odor.
3.0	4.0'			SAME AS ABOVE
4.0	5.0'			CLAY/SILT (100%), greenish-gray, very plastic,
				green-gray mottling, moist to wet

K0738H08-BORL06-0061

GERAGHTY & MILLER, INC.
Ground-Water Consultants

SAMPLE/CORE LOG

Boring/Well #82 Project/No. PA00708-0RM07 Page 1 of 1

Site Location HANNIBAL, OHIO Drilling Started 2/6/90 - 15:05 Drilling Completed 2/6/90 15:15

Total Depth Drilled N/A feet Hole Diameter N/A inches Type of Sample/Coring Device BUCKET AUGER

Length and Diameter of Coring Device N/A Sampling Interval VARIABLE feet

Land-Surface Elev. ' feet ☐ Surveyed ☐ Estimated Datum

Drilling Fluid Used N/A Drilling Method N/A

Drilling Contractor N/A Driller N/A Helper N/A

Prepared By TAYLOR/CAMPBELL Hammer Weight — Hammer Drop — inches

COMMENT: SITE LOCATED ADJACENT TO OUTFLOW STREAM

Sample/Core Depth (feet below land surface) From	To	Core Recovery (feet)	Time/Hydraulic Pressure or Blows per 6 inches	Sample/Core Description
0.0	0.5'	—	—	SAND/SILT (85%), fine to very fine;
				CLAY (5%); slightly plastic; ROOTED
				ORGANIC MATTER (5%); CARBON PARTICULATES
				(5%), appear as fine vitreous sediment
				with conchoidal fracture; dark brown to
				black; moderate bulk density. Sl. moist
0.5	0.8'	—	—	SAME AS ABOVE
0.8	1.0'	—	—	SILT/CLAY (100%), medium orange-brown,
				moist to wet, moderately plastic texture,
				high bulk density
1.0	1.5'	—	—	SAME AS ABOVE but SATURATED

Southprint 87-1718

R0738H08-B0RL06-0062

GERAGHTY & MILLER, INC.
Ground-Water Consultants

SAMPLE/CORE LOG

Boring/Well #83 Project/No. PA007108-ORMET Page 1 of 2

Site Location HANNIBAL, OH Drilling Started 2/6/90-14:30 Drilling Completed 2/6/90-14:40

Total Depth Drilled N/A feet Hole Diameter N/A inches Type of Sample/Coring Device BUCKET AUGER

Length and Diameter of Coring Device N/A Sampling Interval VARIABLE feet

Land-Surface Elev. _____ feet ☐ Surveyed ☐ Estimated Datum _____

Drilling Fluid Used N/A Drilling Method N/A

Drilling Contractor N/A Driller N/A Helper N/A

Prepared By TAYLOR/CAMPBELL Hammer Weight — Hammer Drop — inches

COMMENT: Location within 4 ft of outflow stream

Sample/Core Depth (feet below land surface) From	To	Core Recovery (feet)	Time/Hydraulic Pressure or Blows per 6 inches	Sample/Core Description
0.0	0.5'	—	—	SILTY SOIL - FINE SAND/SILT (70%),
				terrigenous composition; CARBON PARTICULATES
				(25%), appears as fine vitreous black sediment
				with conchoidal fracture; ROOTED/WOODY
				ORGANIC MATTER (5%), SLIGHTLY MOIST,
				HIGHLY ROOTED; LOW BULK DENSITY, VERY DARK BROWN
0.5	0.8'			SAND/SILT (70%), very fine to fine; CARBON
				PARTICULATES (20%), as described above;
				WOODY/LEAFY ORGANIC MATTER (5%);
				CLAY (5%); SLIGHTLY PLASTIC, INCREASED
				BULK DENSITY; MOTTLED GRAY AND WEAKLY
				BROWN, MOIST
0.8	1.0'			SAND (60%), fine to very fine; CLAY
				(40%), moderately plastic; moderate
				BULK DENSITY; DARK GRAY - SLUDGY
				APPEARANCE; HYDROCARBON ODOR; WET
1.0	1.5'			SAND (60%), fine to very fine; CLAY (40%),
				moderately PLASTIC; STRONG hydrocarbon
				odor, dark gray - sludgy appearance,
				local occurrence of green irredescent patches -

Southpoint 87-1718

GERAGHTY & MILLER, INC.
Ground-Water Consultants

SAMPLE/CORE LOG (Cont.d)

Boring/Well #83

Prepared By TAYLOR/CAMPBELL

Sample/Core Depth (feet below land surface) From	To	Core Recovery (feet)	Time/Hydraulic Pressure or Blows per 6 inches	Sample/Core Description
1.5	2.0'	—	—	SAND (20-30%), fine to very fine;
				CLAY/SILT (70-80%), moderately plastic;
				LEAFY ORGANIC MATTER (R); wet to saturated;
				Hydrocarbon odor
2.0	2.5'	—	—	SILT/CLAY (90%), very plastic, high
				bulk density; SAND (10%), very fine;
				Greenish-gray, moist to wet, LACKS
				Hydrocarbon odor
2.5	3.0'			Same as above, greenish-gray clay,
				wet
3.0	3.5'			Same as above, greenish-gray clay,
				generally moist to wet, locally saturated.
3.5	4.0'			SAME as above, mainly clay - but
				mottled/intermixed greenish-gray and
				red-brown clay.

R0738H08-BORLOG-0063

GERAGHTY & MILLER, INC.
Ground-Water Consultants

SAMPLE/CORE LOG

Boring/Well #84 Project/No. PA00708 - OEMET Page 1 of 1

Site Location HANNIBAL, OHIO Drilling Started 2/6/90 - 14:45 Drilling Completed 2/6/90 14:50

Total Depth Drilled N/A feet Hole Diameter N/A inches Type of Sample/ Coring Device BUCKET AUGER

Length and Diameter of Coring Device N/A Sampling Interval VARIABLE feet

Land-Surface Elev. _____ feet ☐ Surveyed ☐ Estimated Datum N

Drilling Fluid Used N/A Drilling Method N/A

Drilling Contractor N/A Driller N/A Helper N/A

Prepared By TAYLOR / CAMPBELL Hammer Weight ____ Hammer Drop ____ inches

COMMENT: SAMPLE LOCATION ~~within~~ adjacent to outflow stream.

Sample/Core Depth (feet below land surface) From	To	Core Recovery (feet)	Time/Hydraulic Pressure or Blows per 6 Inches	Sample/Core Description
0.0	0.2'	—	—	ROOTED TOPSOIL - SILTY-SAND, (NTU), very fine; highly rooted; dark brown, low Bulk Dens
0.2	0.5	—	—	SILTY SAND (90%), fine to very fine; ROOTED ORGANIC MATTER (~10%); CARBON PARTICULATES (TR), slightly moist, dark brown, low bulk density
0.5	1.0'	—	—	Same as above
1.0	1.5'	—	—	SILTY/CLAY (98%), moderately plastic texture, medium orange-brown, slightly moist; WOODY ORGANIC MATTER (≤2%)
1.5	2.0'			SAME AS ABOVE

Southpoint 87-1718

GERAGHTY & MILLER, INC.
Ground-Water Consultants

SAMPLE/CORE LOG

Boring/Well #85 Project/No. PA00708 -ORMET Page 1 of 1

Site Location HANNIBAL, OHIO Drilling Started 2/6/90-14:55 Drilling Completed 2/6/90 15:00

Total Depth Drilled N/A feet Hole Diameter N/A inches Type of Sample/ Coring Device BUCKET AUGER

Length and Diameter of Coring Device _____ Sampling Interval VARIABLE feet

Land-Surface Elev. _____ feet ☐ Surveyed ☐ Estimated Datum _____

Drilling Fluid Used N/A Drilling Method N/A

Drilling Contractor N/A Driller N/A Helper N/A

Prepared By TAYLOR/CAMPBELL Hammer Weight — Hammer Drop — inches

Sample/Core Depth (feet below land surface) From	To	Core Recovery (feet)	Time/Hydraulic Pressure or Blows per 6 inches	Sample/Core Description
0.0	0.2'	—	—	SILTY SOIL (100%), very fine, dark brown, extensively rooted
0.2	1.0'	—	—	SILTY/CLAY (100%), medium orange-brown, slightly moist, moderately plastic texture, upper horizon rooted

G&M Form 03.6.86 Southpoint 87-1718

APPENDIX K

BORING LOGS FOR RECREATION AREA SOIL BORINGS

ORMET CORPORATION
HANNIBAL, OHIO

GERAGHTY & MILLER, INC.
Ground-Water Consultants

4/22/88

SAMPLE/CORE LOG R0738H08-BOR06-0041

Boring/Well RAB-1 Project/No. ORMET / P90738H008 Page 1 of 4

Site Location Hannibal, OHIO Drilling Started 7:42 AM 4/22/88 Drilling Completed 9:55 AM 4/22/88

Total Depth Drilled 24 feet Hole Diameter 8 inches Type of Sample/Coring Device split spoon

Length and Diameter of Coring Device 2' x 2' Sampling Interval Cont. feet

Land-Surface Elev. 656.64 feet ☒ Surveyed . Estimated Datum MSL

Drilling Fluid Used —— Drilling Method HSA

Drilling Contractor Pennsylvania Drilling Co. Driller R. Waddell Helper Kurt W.

Prepared By J. B. Naser Hammer Weight 140 # Hammer Drop 30 inches

Sample/Core Depth (feet below land surface) From	To	Core Recovery (feet)	Time/Hydraulic Pressure or Blows per 6 inches	Sample/Core Description
0.0	2.0	1.0	3/3/2/2	(top .2') grass, humus
				(bottom .8') 40-50% fine-med, sub-rounded,
				gravel; 30-40% fine-med, sub-rounded,
				sand; 20% clay; mod dense; med brown;
				roots; poorly sorted; dry
2.0	4.0	1.1	1/1/3/4	60% fine-med, sub-rounded, gravel; 30%
				fine-med, sub-rounded, sand; 10% silt;
				mod dense; poorly sorted; damp; med brown;
				s.s. frags
4.0	6.0	1.5	7/9/9/13	(top 1.3) 50-60% fine-med, sub-rounded,
				sand; 30-40% fine-med, rounded, gravel;
				10-15% silt; s.s. frags present.
				(bottom .2') 80% fine-med, sub-rounded,
				sand; 10% fine-med, sub-rounded; 10% silt;
				mod dense, sl. damp; poorly sorted;
				med brown;
6.0	8.0	1.0	6/9/11/7	50-60% fine-med, sub-rounded, gravel; 30-40%
				fine-med, rounded, sand; 10-15% silt; 10% clay,
				sandstone and granite present; mod dense;
				poorly sorted; med brown; sl. damp

4/22/88

GERAGHTY & MILLER, INC.
Ground-Water Consultants

R0738 H08 - BORLOG - 0041 (CONT.)

SAMPLE/CORE LOG (Cont.d)

Boring/Well RAB-1

Prepared By J. B. Naser

Sample/Core Depth (feet below land surface) From	To	Core Recovery (feet)	Time/Hydraulic Pressure or Blows per 6 inches	Sample/Core Description
8.0	10.0	1.5	4/9/13/11	50-60% fine-med, sub-rounded,
				gravel; 30-40% fine-med, sub-rounded,
				sand, 10-15% silt; 10% clay;
				mod dense; med brown/dk brown;
				poorly sorted; sl damp; several
				thin black bands present
10.0	12.0	1.3	6/8/11/8	50-60% fine-med, sub-rounded,
				gravel; 30% fine-med, rounded,
				sand; 10-15% silt; 10% clay;
				s.s. frags present; mod dense;
				med brown/gray; poorly
				sorted; med brown
12.0	14.0	1.0	4/6/12/12	70% fine-med, sub-rounded gravel;
				20% silt; 10% clay, s.s present.
				dark gray thin band .3' from
				bottom; mod dense, olive green/gray;
				med brown; sl. damp; poorly sorted.
14.0	16.0	.6	5/8/12/15	60% fine-med, sub-rounded gravel;
				20% fine-med, sub-rounded sand;
				10-15% clay, 10% silt; s.s. cobble
				stuck in shoe; mod dense;
				poorly sorted; med brown; sl damp

4/22/88

GERAGHTY & MILLER, INC.
Ground-Water Consultants

BORLOG-0041 (CONT.)

SAMPLE/CORE LOG (Cont.d)

Boring/Well RAB-1

Prepared By J. B. Naser

Sample/Core Depth (feet below land surface) From	To	Core Recovery (feet)	Time/Hydraulic Pressure or Blows per 6 inches	Sample/Core Description
16.0	18.0	1.9	5/6/7/8	50% fine-med, sub-rounded, sand;
				30-40% fine-med, sub-rounded,
				gravel; 15% silt; 5% clay;
				mod dense; med brown, poorly
				sorted; sl. damp; s.s. frags present;
				sl. damp
18.0	20.0	1.1	6/7/6/9	(top .5') 80% fine-med, sub-rounded,
				sand; 20% fine-med, sub-rounded,
				gravel; trace silt; poorly sorted;
				sandstone (s.s.) frags present.
				(bottom .6') 90% fine-med, sub-rounded,
				sand; 10% fine-med, gravel; trace
				silt; moderately sorted; mod
				dense, sl. moist, med brown
20.0	22.0	1.5	2/4/7/10	80% fine-med, sub-rounded,
				sand; 20% fine-med, sand;
				trace silt; mod dense, med brown;
				mod sorted; sl. damp; s.s. bands
				present; v. thin black band
				present

4/22/88

GERAGHTY & MILLER, INC.
Ground-Water Consultants

BORLOG-0041 (CONT.)

SAMPLE/CORE LOG (Cont.d)

Boring/Well RAB-1

Prepared By J. B. Naser

Sample/Core Depth (feet below land surface) From	To	Core Recovery (feet)	Time/Hydraulic Pressure or Blows per 6 inches	Sample/Core Description
22.0	24.0	.6	6/7/8/7	70% fine-med, sub-rounded, sand;
				25% fine-med, sub-rounded, gravel;
				5% silt; S.S. frags present;
				mod dense; med brown; sl damp;
				poorly sorted.
24.0	26.0	1.4	3/6/7/8	40-50% sub-rounded, fine-med
				gravel; 40-50% fine-med,
				sub-rounded, sand; 5-10% silt;
				S.S. cobbles; mod dense;
				poorly sorted; sl. damp; med
				brown

4/22/88

GERAGHTY & MILLER, INC.
Ground-Water Consultants

R0738H08 - BORLOG-0042

SAMPLE/CORE LOG

Boring/Well RAB-2 Project/No. ORMET / R0738H08 Page 1 of 1

Site Location Hannibal, OHIO Drilling Started 11:21 AM 4/22/88 Drilling Completed 11:58AM 4/22/88

Total Depth Drilled 8 (feet)

Hole Diameter 8 (inches) Type of Sample/Coring Device split spoon

Length and Diameter of Coring Device 2' x 2' Sampling Interval Cont feet

Drilling Fluid Used none Drilling Method HSA

Drilling Contractor Pennsylvania Drilling Co. Driller R. Waddell Helper Kurt Waddell

Prepared By J. B. Naser Hammer Weight 140# Hammer Drop 30 inches

Sample/Core Depth (feet below land surface) From	To	Core Recovery (feet)	Time/Hydraulic Pressure or Blows per 6 inches	Sample/Core Description
0.0	2.0	1.3	2/3/5/5	(top .2) grass, humus
				(bottom 1.1) 70% clay; 30% silt;
				mod dense; med brown/redish brown,
				sl damp, top 1' more silty
				gradually decreasing w/ depth; roots,
				sl. gray mottling
2.0	4.0	1.8	2/2/1/3	60-70% silt; 30-40% clay;
				common fine gray lt gray mottles;
				roots present, mod dense; sl. damp
4.0	6.0	2.0	2/1/2/3	60% silt; 40% clay; coarse
				mottling; pores saturated; sl damp;
				redish brown, mod dense, fine roots
6.0	8.0	1.9	2/3/3/5	50-60% silt; 40-50% clay; mod
				dense, coarse gray/black mottling;
				grayish brown; fine roots
8.0	10.0	1.8	2/3/5/6	50-60% clay; 40-50% silt; common
				coarse, lt gray/black mottling;

Pores saturated; gray/brown; fine roots

4/22/88

GERAGHTY & MILLER, INC.
Ground-Water Consultants

R0738H08-BORLOG-0043

SAMPLE/CORE LOG

Boring/Well RAB-3 Project/No. ORMET / R0738H08 Page 1 of 1

Site Location Hannibal, OHIO Drilling Started 10:28 AM 4/22/88 Drilling Completed 11:03 AM 4/22/88

Total Depth Drilled 8 (feet)

Hole Diameter 8 (inches) Type of Sample/Coring Device Split Spoon

Length and Diameter of Coring Device 2' x .2' Sampling Interval Cont feet

Drilling Fluid Used none Drilling Method HSA

Drilling Contractor Pennsylvania Drilling Co. Driller R. Waddell Helper Kurt W.

Prepared By J.B. Naser Hammer Weight 140 # Hammer Drop 30 inches

Sample/Core Depth (feet below land surface) From	To	Core Recovery (feet)	Time/Hydraulic Pressure or Blows per 6 Inches	Sample/Core Description
0.0	2.0	1.3	2/6/4/5	(.2') grass, humus
				(.2-1.3') 70% clay; 30% silt; med
				brown, mod dense; dry; roots
2.0	4.0	1.3	2/1/3/3	70% clay; 30% silt; med brown,
				mod dense, dry; roots
4.0	6.0	1.7	2/2/4/4	60% clay; 40% silt; common
				coarse gray & black mottles;
				sl. damp; mod dense, med olive
				brown
6.0	8.0	1.7	2/3/3/3	(top 1.4) 60% clay; 40% silt, mod
				dense; v. moist; redish med brown
				(1.4-1.7) 100% gray, silt, mod dense, sl. damp
				roots
8.0	10.0	1.8	8/5/7/8	60% clay; 40% silt; common
				coarse, gray, mottling; mod dense; redish
				brown; (top .8) v. moist; (bottom 1.0)
				sl. damp, black specs in shoe material

GERAGHTY & MILLER, INC.
Ground-Water Consultants

R0738H08-BORLOG-0025

SAMPLE/CORE LOG

Boring/Well MW-42 Project/No. R0738H08 Page 1 of 3

Site Location ORMET - Hannibal Drilling Started 2/23/88 Drilling Completed 2/24/88

Total Depth Drilled 33.5 feet Hole Diameter 8 inches Type of Sample/Coring Device Split Spoon

Length and Diameter of Coring Device 24" x 2" Sampling Interval 5.0 feet

Land-Surface Elev. 653 feet ☐ Surveyed ☒ Estimated Datum MSL

Drilling Fluid Used CLEAN WATER USED TO FLUSH FLOWING SAND Drilling Method Hollow Stem Auger

Drilling Contractor Pennsylvania Drilling Driller Russ Woodell Helper Kurt Waldel

Prepared By K. Wells Hammer Weight 140 lbs Hammer Drop 30 inches

Sample/Core Depth (feet below land surface) From	To	Core Recovery (feet)	Time/Hydraulic Pressure or Blows per 6 inches	Sample/Core Description
0	2	1.5	2/2/11/11	sand (60-70%) fine to coarse; silt and clay (10-15%);
				fine sandy silt (15%) — damp, medium brown, subrounded
5	7	1.4	7/7/9/9	sand (60%) fine-grained, rounded; silty sand (35%); clay
				(trace - 5%) — damp, medium brown, finer-grained than above
10	12	1.5	2/6/10/11	sand (70-80%), coarse - very coarse grained, subrounded;
				gravel (15-20%), fine-grained to medium, well rounded; clay (trace - 5%) -
				brown, moist — top 1 foot same as above — bottom 6 inches becomes finer grained
15	17	1.0	7/10/6/13	sand (80%), rounded, medium to coarse grained; fine gravel
				(10-20%), rounded to well-rounded — medium brown, damp, some
				large gravel pieces
20	22	1.4	6/13/14/16	gravel (60%), sub-rounded; fine sand and gravel (40%) - not well-
				sorted, damp with dark brown carbonaceous fragments, medium-
				yellow brown
25	27	-0-	10/15/13/16	
Note:	Sample taken at 27-28' -/-/14/15			2nd spoon fine gravel (80%), rounded; fine sand and gravel (10-15%),
				well-rounded; clay (trace) — orange brown, damp with fine-
				grained weathered sandstone fragments
30	32	1.3	6/10/10/13	medium to coarse gravel (60%), well-rounded; medium to coarse
				sand (40%), rounded — moist, dark orange brown — mix of
				carbonaceous fragments — some large pebbles

GERAGHTY & MILLER, INC.
Ground-Water Consultants

SAMPLE/CORE LOG (Cont.d)

Boring/Well MW-42d

Prepared By K. Wells

Sample/Core Depth (feet below land surface) From	To	Core Recovery (feet)	Time/Hydraulic Pressure or Blows per 6 inches	Sample/Core Description
35	37	1.5	5/10/13/16	coarse gravel (60-70%), rounded; coarse sand
				(20-25%) well-rounded; carbonaceous clay
				(5%) — moist, dark brown with black
				carbonaceous fragments — some large pebbles
40	42	1.0	5/10/9/12	coarse gravel (60-70%), rounded; coarse
				sand (20-25%) well-rounded; carbonaceous
				clay (5%) — moist, dark brown, some large pebbles
Hit water table ~		44.0 ft.		
45	47	1.3	2/4/6/12	sand (80%), medium to coarse, well rounded;
				fine-medium grained gravel (20%), well-rounded
				with large pebbles — saturated, dark brown
				with some carbonaceous streaks
Flowing sands problem				
50	52	0.5	10/11/21/18	fine gravel (80%), well rounded with some large
				pebbles; coarse sand (20%) — saturated, medium
				brown
Note: samples not showing coarse fractions — cuttings indicate coarse gravel — samples not truly representative				
55	57	0.5	6/6/11/15	coarse gravel (90%), well rounded; fine gravel
				to coarse sand (10%) — medium brown, saturated —
				with dark carbonaceous band
Flowing sand problem				
60	62	1.0	16/19/23/29	coarse gravel (90%), well rounded; fine gravel
				to coarse sand (10%) — medium brown, saturated —
				with dark carbonaceous band

GERAGHTY & MILLER, INC.
Ground-Water Consultants

SAMPLE/CORE LOG (Cont.d)

Boring/Well MW-42d

Prepared By K. Wells

Sample/Core Depth (feet below land surface) From	To	Core Recovery (feet)	Time/Hydraulic Pressure or Blows per 6 inches	Sample/Core Description
65	67	1.2	19/13/19/25	coarse gravel (90%), well rounded; fine gravel
				to coarse sand (10%) - medium brown, saturated
70	72	1.6	64/62/56/29	coarse gravel (80-90%); coarse sand
				(10-20%) — saturated, well rounded with
				~~heavy~~ large pebbles
Flowing sand problem				
75	77	0	28/17/14/14	Sent 2nd spoon down to sample 77-78'
77	79	1.0	12/15/49/17	coarse gravel (90%), rounded; coarse sand
				(10%), subrounded — saturated, medium
				brown with multicolored pebble fragments
Flowing sand problem (over 1 auger length)				
80	82			No sample taken — could not clean sand out
				of augers
83.5				Hit bedrock
83.5	84.25		54/67/3"	Limestone

APPENDIX L

DATA FROM THE INSTALLATION AND CONSTRUCTION OF GROUND-WATER MONITORING WELLS

ORMET CORPORATION
HANNIBAL, OHIO

APPENDIX L-1	**Boring Logs for Monitoring Wells Installed During Phase I RI**
APPENDIX L-2	**Construction Logs for Monitoring Wells Installed During Phase I RI**
APPENDIX L-3	**Monitoring Well Development Data**

APPENDIX L-1

BORING LOGS FOR MONITORING WELLS INSTALLED DURING PHASE I RI

ORMET CORPORATION
HANNIBAL, OHIO

GERAGHTY & MILLER, INC.
Ground-Water Consultants

R0738H08- BORLOG-0026

SAMPLE/CORE LOG

Boring/Well MW-43d Project/No. R0738-57 Page 1 of 2

Site Location ORMET - HANNIBAL, OHIO Drilling Started 3/1/88 Drilling Completed 3/1/88

Total Depth Drilled 64.0 feet Hole Diameter 8.0 inches Type of Sample/Coring Device split spoon

Length and Diameter of Coring Device 24.0 x 2.0 inches Sampling Interval every 5.0 feet

Land-Surface Elev. 631 feet ☐ Surveyed ☒ Estimated Datum MSL

Drilling Fluid Used None - clean water used below water table to flush out flowing sand Drilling Method HSA

Drilling Contractor PENNSYLVANIA DRILLING Driller RUSS WAGGELL Helper KURT WAGGELL

Prepared By R Wells Hammer Weight 140 lbs Hammer Drop 30 inches

Sample/Core Depth (feet below land surface) From	To	Core Recovery (feet)	Time/Hydraulic Pressure or Blows per 6 inches	Sample/Core Description
0	2	0.8	4/10/27/4	FILL (100%) black, fine grained with slight gray stains, looks like slag or cottonseed but some cotton fibers (asbestos?) - negative ave detector
4	6	1.4	WOR/1/1	FILL (100%) dark gray, moist, very fine-grained - gelatinous consistency, very cohesive and rubbery {NOTE: black ooze coming up in cuttings}
9	11	1.9	1/1/3/3	CLAY (100%) gray; grading into mottled brown and blue-gray at 10.5 ft, moist and gluey, coated with black residue from upper ooze layer
14	16	1.3	2/4/4/6	CLAY (95%) mottled blue-gray and orange-brown; silt (trace - 5%) orange-brown - saturated, very cohesive
19	21	1.7	1/3/4/5	CLAY (95%) mottled blue-gray and orange-brown, orange-brown predominant; silt (trace - 5%) - saturated, very cohesive
24	26	1.9	2/2/4/5	CLAY (80%) orange-brown, cohesive; fine sand, 20%, orange-brown, saturated - simple grading into coarser material - saturated, with few gray mottles, some gravel at 26.5'
29	31	1.9	3/3/4/6	SILT (70%) brown, sand (25%) brown saturated, poorly sorted; clay (trace to 5%) - saturated
34	36	1.2	11/12/31/39	SAND (60%) med. to coarse, brown saturated; gravel (40%) some gravel fragments, some are pebbles, saturated -
* water table ~	37 feet			
39	41	1.4	8/15/2/6	FINE SAND (50%) brown saturated with long pebbles; sand (20%) brown medium - saturated, sandy

GERAGHTY & MILLER, INC.
Ground-Water Consultants

SAMPLE/CORE LOG (Cont.d)

Boring/Well MW-47G

Prepared By K. Wells

Sample/Core Depth (feet below land surface) From	To	Core Recovery (feet)	Time/Hydraulic Pressure or Blows per 6 inches	Sample/Core Description
44	46	0	—	No sample taken – flowing sands problem
49	51	0.25	16/21/17/19	FINE GRAVEL (95%) orange-brown with coarse fragments, subrounded; sand (10%) coarse, rounded – saturated, poorly sorted
54	56	0.30	20/22/29/27	GRAVEL (70%) brown to tan, subrounded, poorly sorted; sand (30%) very coarse, rounded, orange-brown – saturated
59	61	0	12/15/17/19	No recovery, sent 2nd split spoon down
59	61	0.50	-/-/10/11	GRAVEL (80%) tan, subrounded, poorly sorted with large angular cryptocrystalline quartz fragments; sand (20%), very coarse, rounded, poorly sorted – saturated
62			100/1	Hit bedrock – auger refusal at 62 ft. No sample taken – clear water used to flush out auger washing up muddy red-brown rock type could be red sand

* Note: Well drilled through some sort of seep zone – upper layers being saturated could account for

GERAGHTY & MILLER, INC.
Ground-Water Consultants

R0738H08-BOR006-0027

SAMPLE/CORE LOG

Boring/Well MW-44d Project/No. ORMET / R0738H08 Page 1 of 5

Site Location Hannibal, OHIO Drilling Started 3/7/88 Drilling Completed 3/8/88

Total Depth Drilled 92 feet Hole Diameter 8 inches Type of Sample/Coring Device split spoon

Length and Diameter of Coring Device 2' x 2' Sampling Interval 5.0 feet

Land-Surface Elev. 660 feet ☐ Surveyed ☒ Estimated Datum MSL

Drilling Fluid Used none - clean water used to control flowing sand below 55' Drilling Method H.S.A.

Drilling Contractor Pennsylvania Drilling Co. Driller P. Waddell Helper Kurt W.

Prepared By J. B. Naser Hammer Weight 140 # Hammer Drop 30 inches

Sample/Core Depth (feet below land surface) From	To	Core Recovery (feet)	Time/Hydraulic Pressure or Blows per 6 inches	Sample/Core Description
0.0	2.0	1.6	4/11/5/5	(0.0 - 0.6) assorted gravel, v. fine sand;
				(0.6 - 2.0) 40% med - coarse, sub - rounded,
				sand; 15-25% clay; 30% med- coarse,
				sub-rounded pebbles, trace silt; med brown,
				mod. dense, dry, poorly sorted
5.0	7.0	1.5	7/2/1/3	55-60% clay; 30% fine- medium, sub-rounded,
				sand; 15% med- coarse, sub- rounded, pebbles;
				gray / brown, mod. dense, damp, poorly sorted
10.0	12.0	.5	4/4/7/7	60-70% clay; 15-25% fine- medium, sub-rounded
				sand; 5-15% med- coarse, sub-rounded, gravel;
				dry, well sorted, mod. dense, med. brown
15.0	17.0	1.2	3/4/10/9	90% clay; 10-15% v. fine- fine, sand;
				mod dense, well sorted, med. brown, dry,
				light gray mottling
20.0	22.0		9/10/15/19	no sample recovered
22.0	23.0	1.0	13/10	40% med- coarse, sub- rounded, sub- angular
				sand; 35-40% med- coarse, sub- rounded, pebbles;
				15-20% silty clay; mod. dense, loose,
				light gray / green, s.s. rock frags, damp

GERAGHTY & MILLER, INC.
Ground-Water Consultants

SAMPLE/CORE LOG (Cont.d)

Boring/Well MW-44 d

Prepared By J. B. Naser

Sample/Core Depth (feet below land surface) From	To	Core Recovery (feet)	Time/Hydraulic Pressure or Blows per 6 inches	Sample/Core Description
25.0	27.0	1.9	9/19/16/19	60-70% med-coarse, sub-rounded,
				sub-angular, sand; 15-25%
				med-coarse, sub-rounded, gravel;
				5-10% fine, silty sand & clay;
				poorly sorted, mod. dense,
				dry, gray/green → med brown
30.0	32.0	1.7	0/10/15/17	90% silty, clay; 10% v. fine-
				fine, sub-rounded, sand;
				mod. dense, dry, well sorted,
				lt greenish/gray; .2' dark
				gray, organic (?) band near base
35.0	37.0	.5	12/14/18/14	90% v. fine, sandy, clay;
				10% fine, sub-rounded gravel;
				mod. dense, well sorted, med brown
				dry; med light green ss.
				wedged in spoon.
40.0	42.0	1.4	2/7/8/11	100% v. fine, sandy, clay;
				mod dense, med. brown, dry
				well sorted.
45.0	47.0	1.6	0/9/10/10	100% v. fine-fine, sub-rounded
				sandy clay; mod dense, med.
				brown, dry, well sorted.

GERAGHTY & MILLER, INC.
Ground-Water Consultants

SAMPLE/CORE LOG (Cont.d)

Boring/Well MW-44d

Prepared By J. B. Naser

Sample/Core Depth (feet below land surface) From	To	Core Recovery (feet)	Time/Hydraulic Pressure or Blows per 6 inches	Sample/Core Description
50.0	52.0	1.5	5/12/16/13	(50-51) 100% v. fine-fine,
				sub-rounded, sandy clay;
				mod dense, med. brown, dry,
				well sorted.
				(51-52) 60-65% med-coarse,
				sub-rounded sand; 20-30%
				med-coarse, sub-rounded gravel;
				10-15% silty clay, loose,
				poorly sorted, v. damp, med.
				brown
55.0	57.0	1.2	4/7/9/11	70% med-coarse, sub-rounded,
				sub-angular, sand; 25%
				med-coarse, sub-rounded gravel;
				5% silt & clay; poorly sorted,
				loose, med brown, saturated.
60.0	62.0	1.7	4/11/13/20	70% med-coarse, sub-rounded,
				sub-angular, sand; 25-30%
				med-coarse, sub-angular,
				sub-rounded, gravel (pebbles);
				trace silt & clay; loose,
				med brown, saturated, poorly
				sorted

GERAGHTY & MILLER, INC.
Ground-Water Consultants

SAMPLE/CORE LOG (Cont.d)

Boring/Well MW-44d

Prepared By J. B. Naser

Sample/Core Depth (feet below land surface) From	To	Core Recovery (feet)	Time/Hydraulic Pressure or Blows per 6 inches	Sample/Core Description
65.0	67.0	1.9	10/11/13/11	65% med-coarse, sub-rounded,
				sub-angular, sand; 30-35%
				med-coarse, sub-rounded
				pebbles; trace silt & clay;
				loose; poorly sorted, med brown,
				saturated.
70.0	72.0	—	5/100/0	No sample, top half of spoon
				full of sand; bottom half
				full of gravel
75.0	77.0	1.2	36/4/4/8	* could be material from
				w/ in augers; coarsens downward;
				(top portion)- med-coarse,
				sub-rounded; sub-angular,
				sand; (bottom portion) 70%
				med-coarse, poorly sorted,
				sub-rounded gravel; 30%
				med-coarse, sub-rounded
				sub-angular, sand; saturated,
				loose, med brown, trace silt & clay
80.0	82.0	1.0	14/23/32/42	100% med-coarse, sub-rounded,
				sub-angular, sand; loose, well sorted,
				med. brown, saturated; black band
				near base.

GERAGHTY & MILLER, INC.
Ground-Water Consultants

SAMPLE/CORE LOG (Cont.d)

Boring/Well MW-44d

Prepared By J. B. Naser

Sample/Core Depth (feet below land surface) From	To	Core Recovery (feet)	Time/Hydraulic Pressure or Blows per 6 inches	Sample/Core Description
85.0	87.0	.5	13/25/32/40	80-90% med-coarse,
				sub-rounded, sub-angular,
				sand; 10-15% med-coarse,
				sub-rounded, gravel; poorly
				sorted, crushed limestone,
				mod. dense, saturated.
90.0	92.0	.5	18/19/100/2	85-90% med-coarse, sub-
				rounded, sub-angular, sand;
				10-15%, med-coarse,
				sub-rounded, gravel; moddense,
				well sorted, saturated,
				med brown.

APPENDIX L-2

CONSTRUCTION LOGS FOR MONITORING WELLS INSTALLED DURING PHASE I RI

ORMET CORPORATION
HANNIBAL, OHIO

GERAGHTY & MILLER, INC.
Ground-Water Consultants

R0738H08-WELL06-0005

WELL CONSTRUCTION LOG

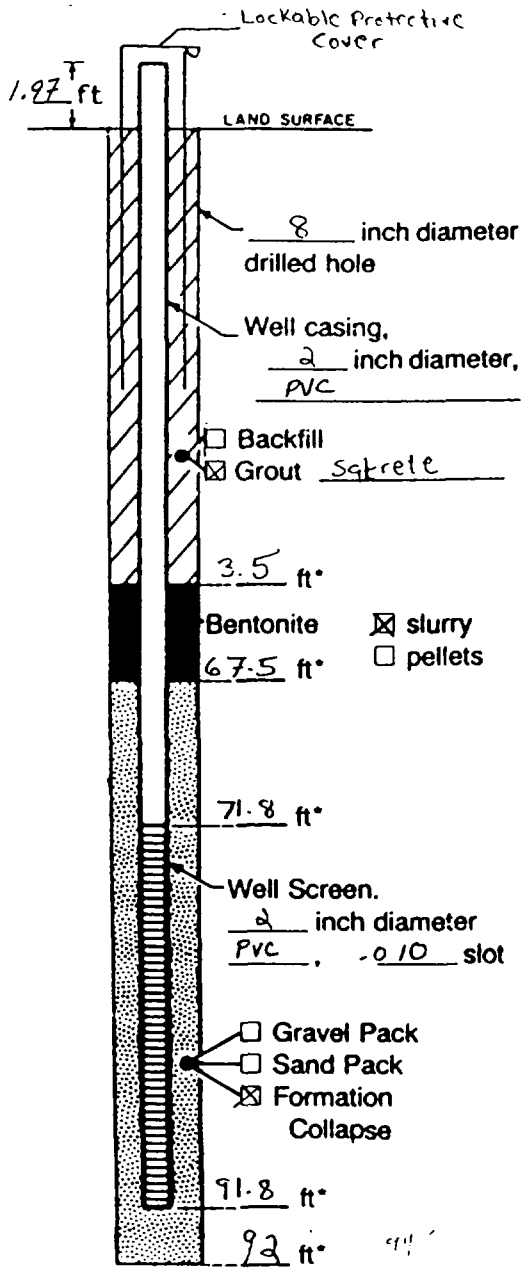

Measuring Point is Top of Well Casing Unless Otherwise Noted.

*Depth Below Land Surface

Project ORMET / R0738H08 Well MW-44d

Town/City Hannibal

County Monroe State OHIO

Permit No.

Land-Surface Elevation and Datum 659.79 feet ☒ surveyed ☐ estimated

Installation Dates(s) 3/7/88 - 3/9/88

Drilling Method H.S.A.

Drilling Contractor Pennsylvania Drilling Co.

Drilling Fluid clean water used to flush sand from augers to sample at correct intervals

Development Techniques(s) and Date(s)

AIRLIFT 6/3/88, 6/6/88, 6/7/88

Fluid Loss During Drilling ~450 gallons

Water Removed During Development 1300 gallons

Static Depth to Water 54.63 (6-20-88) feet below M.P.

Pumping Depth to Water feet below M.P.

Pumping Duration hours

Yield gpm Date

Specific Capacity gpm/ft

Well Purpose Deep GW Monitoring well

Remarks

Prepared by J. E. Moore

1/86

R0738H08-WELLOG-0002

GERAGHTY & MILLER, INC.
Ground-Water Consultants

WELL CONSTRUCTION LOG

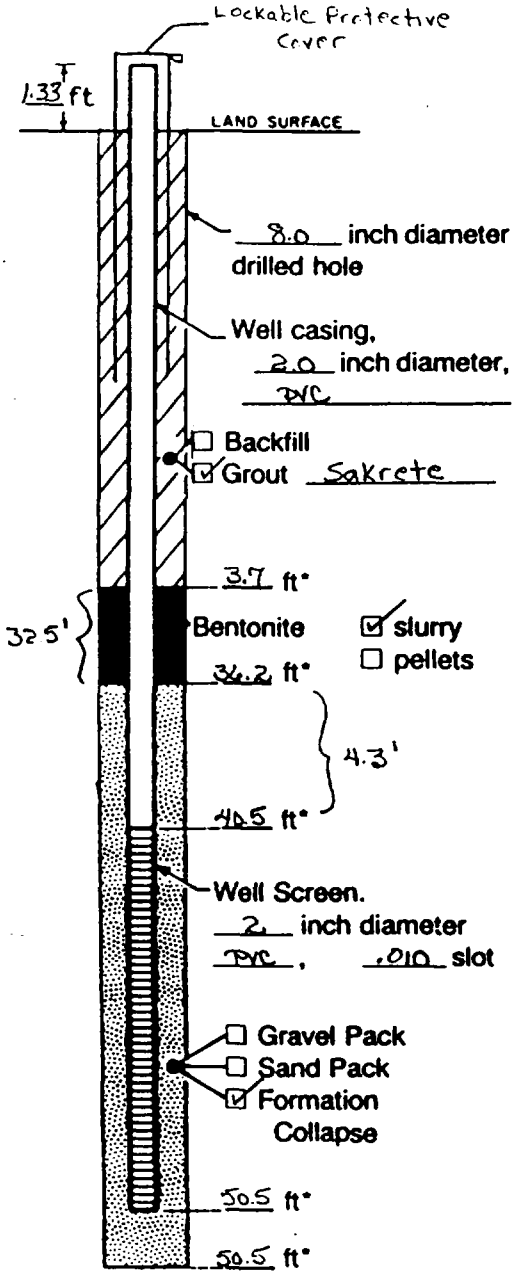

Measuring Point is Top of Well Casing Unless Otherwise Noted.

*Depth Below Land Surface

Project R0738H08 Well MW-42S

Town/City Hannibal

County Monroe State OHIO

Permit No. _____

Land-Surface Elevation and Datum 653.04 feet ☒ surveyed ☐ estimated

Installation Dates(s) 2/29/88

Drilling Method HSA

Drilling Contractor Pennsylvania Drilling

Drilling Fluid None - water used to flush flowing sands out of augers below the water table

Development Techniques(s) and Date(s)

BAILED 6/6/88, 6/7/88, 6/9/88

Fluid Loss During Drilling _____ gallons

Water Removed During Development 145 gallons

Static Depth to Water 42.17 (6-20-88) feet below M.P.

Pumping Depth to Water _____ feet below M.P.

Pumping Duration _____ hours

Yield _____ gpm Date _____

Specific Capacity _____ gpm/ft

Well Purpose Shallow ground-water monitoring well

Remarks To avoid bridging problems, pellets were not installed.

Prepared by K. Wells

R0738H08 - WELLOG - 0001

GERAGHTY & MILLER, INC.
Ground-Water Consultants

WELL CONSTRUCTION LOG

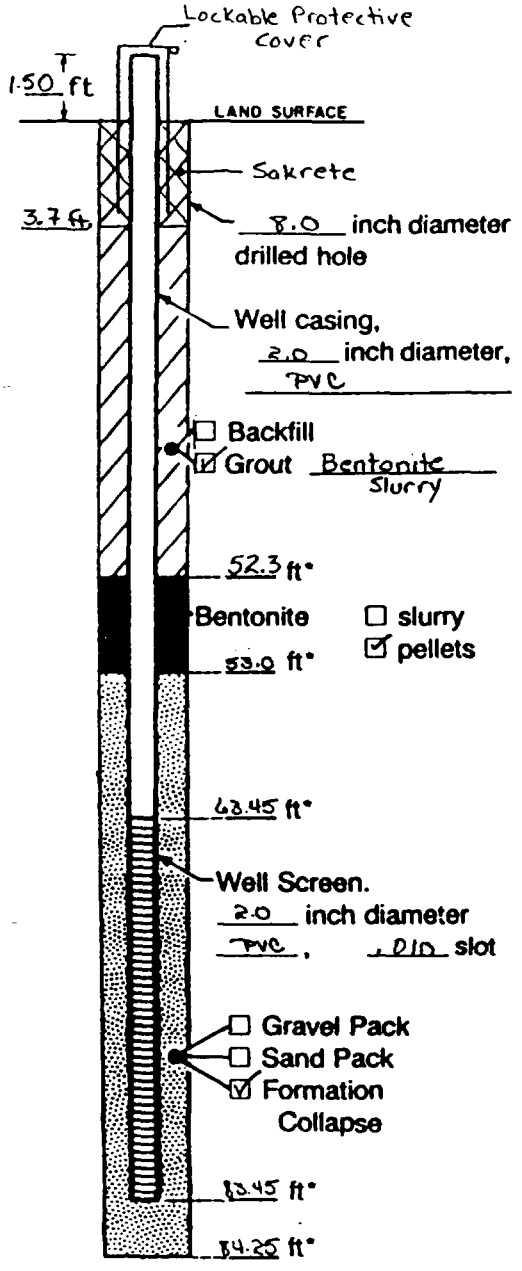

Measuring Point is Top of Well Casing Unless Otherwise Noted.

*Depth Below Land Surface

Project R0738H08 Well MW-42d

Town/City Hannibal

County Monroe State Ohio

Permit No.

Land-Surface Elevation and Datum 653.14 feet MSL ☒ surveyed ☐ estimated

Installation Dates(s) 2/25/88 - 2/26/88

Drilling Method HSA

Drilling Contractor Pennsylvania Drilling

Drilling Fluid None - water used to flush out augers when encountering flowing sands below the water table.

Development Techniques(s) and Date(s)
AIRLIFT 6/1/88, 6/2/88

Fluid Loss During Drilling ~450 gallons

Water Removed During Development 1250 gallons

Static Depth to Water 42.07 (6-20-88) feet below M.P.

Pumping Depth to Water feet below M.P.

Pumping Duration hours

Yield gpm Date

Specific Capacity gpm/ft

Well Purpose Deep ground-water monitoring well

Remarks Difficulties with sand plug in augers resulted in extended formation collapse above screen.

Prepared by K Wells

2/29/88 — water level tape: 40.45' below land surface
1 gallon water bailed, well recovers [illegible]

R0738H08-WELLOG-0004

GERAGHTY & MILLER, INC.
Ground-Water Consultants

WELL CONSTRUCTION LOG

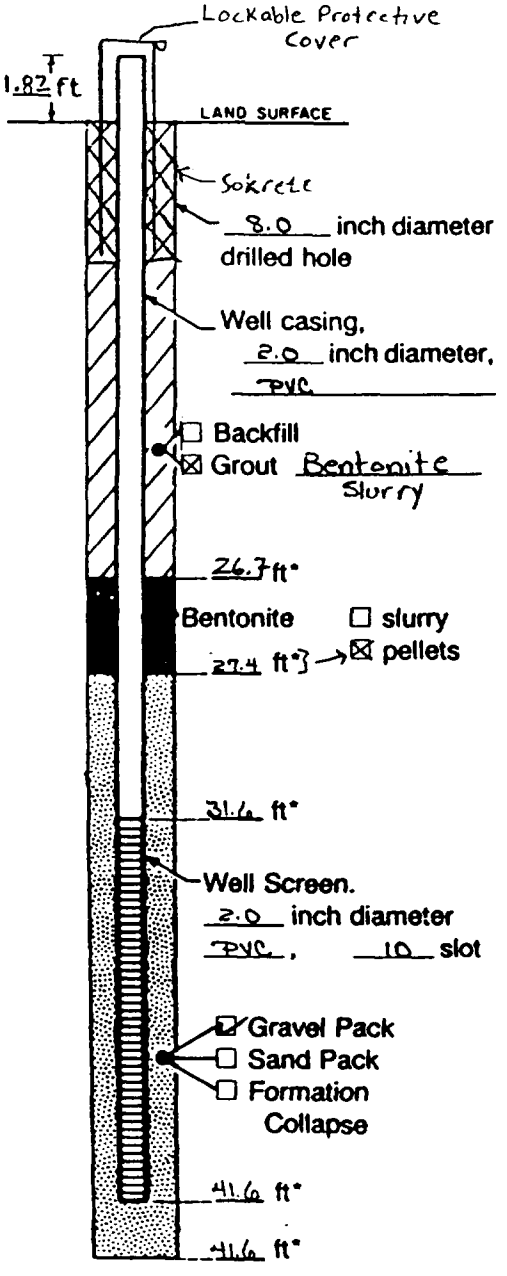

Measuring Point is Top of Well Casing Unless Otherwise Noted.

*Depth Below Land Surface

Project R0738H08 Well MW-43S

Town/City HANNIBAL

County MONROE State OHIO

Permit No. _____

Land-Surface Elevation and Datum 631.86 feet ☒ surveyed ☐ estimated

Installation Date(s) 3/3/88

Drilling Method Hollow stem auger

Drilling Contractor Pennsylvania Drilling

Drilling Fluid None – water used to flush out flowing sands encountered below the water table

Development Techniques(s) and Date(s)

AIRLIFT 6/9/88

Fluid Loss During Drilling _____ gallons

Water Removed During Development 130 gallons

Static Depth to Water _____ feet below M.P.

Pumping Depth to Water _____ feet below M.P.

Pumping Duration _____ hours

Yield _____ gpm Date _____

Specific Capacity _____ gpm/ft

Well Purpose Shallow ground-water monitoring well

Remarks _____

Prepared by R Wells

K0738H08- WELLOG- 0003

GERAGHTY & MILLER, INC.
Ground-Water Consultants

WELL CONSTRUCTION LOG

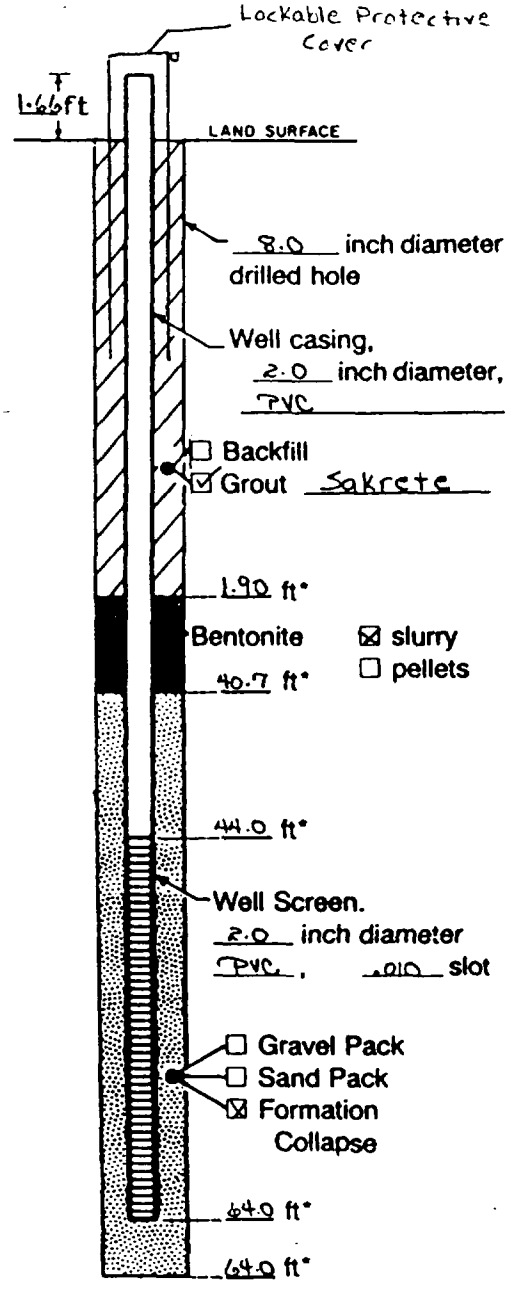

Measuring Point is Top of Well Casing Unless Otherwise Noted.

*Depth Below Land Surface

Project R0738H08 Well MW-43d

Town/City HANNIBAL

County MONROE State OHIO

Permit No. _____

Land-Surface Elevation and Datum 631.46 feet ☒ surveyed ☐ estimated

Installation Dates(s) 3/2/88 and 3/3/88

Drilling Method HOLLOW STEM AUGER

Drilling Contractor PENNSYLVANIA DRILLING

Drilling Fluid NONE — water used to flush out flowing sands below the water table.

Development Techniques(s) and Date(s)
AIRLIFT 6/9/88

Fluid Loss During Drilling _____ gallons

Water Removed During Development 450 gallons

Static Depth to Water 21.10 (6-20-88) feet below M.P.

Pumping Depth to Water _____ feet below M.P.

Pumping Duration _____ hours

Yield _____ gpm Date _____

Specific Capacity _____ gpm/ft

Well Purpose Deep ground-water monitoring well

Remarks To avoid bridging problems, pellets were not installed.

Prepared by K. Wells

R0738H08-WELLOG-0006

GERAGHTY & MILLER, INC.
Ground-Water Consultants

WELL CONSTRUCTION LOG

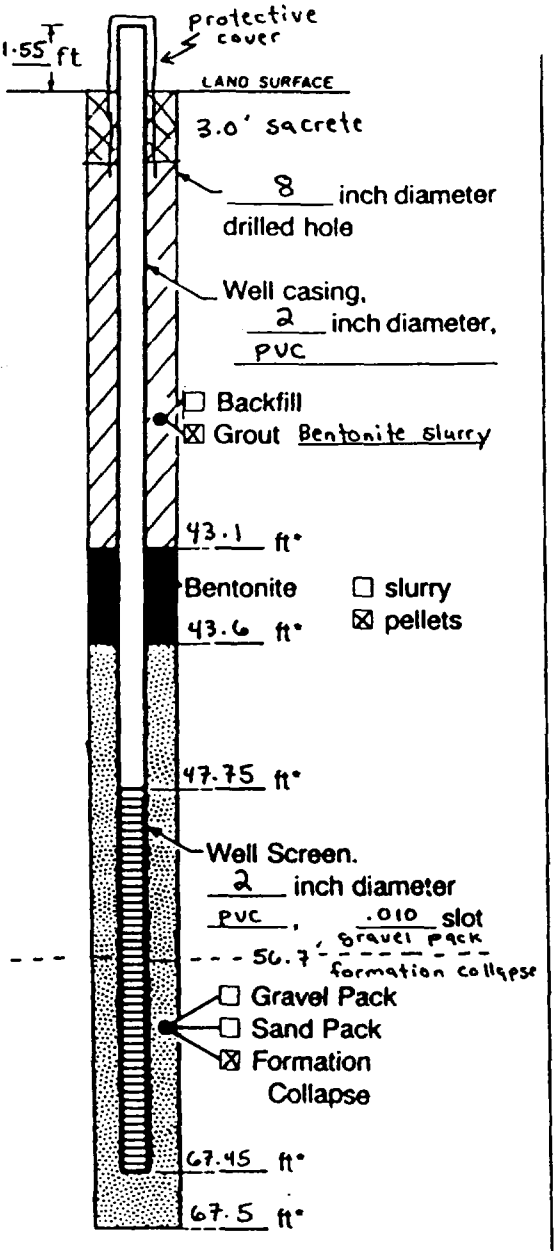

Measuring Point is Top of Well Casing Unless Otherwise Noted.

*Depth Below Land Surface

Project ORMET / R0738 H08 Well MW-44S

Town/City Hannibal

County Monroe State OHIO

Permit No. _____

Land-Surface Elevation and Datum 660.69 feet ☒ surveyed ☐ estimated

Installation Dates(s) 3-9-88 to 3-10-88

Drilling Method H.S.A

Drilling Contractor Pa. Drilling Co.

Drilling Fluid Clean water used to flush sand from augers before setting well assembly

Development Techniques(s) and Date(s)
BAILER 6/9/88, 6/10/88

Fluid Loss During Drilling _____ gallons

Water Removed During Development 80 gallons

Static Depth to Water 54.03 (6-20-88) feet below M.P.

Pumping Depth to Water _____ feet below M.P.

Pumping Duration _____ hours

Yield _____ gpm Date _____

Specific Capacity _____ gpm/ft

Well Purpose Shallow G.W. monitoring well

Remarks Formation collapse achieved to 56.7'
Gravel pack added to 43.6'

Prepared by J. B. Naser

APPENDIX L-3

WELL DEVELOPMENT FOR MONITORING WELLS INSTALLED DURING PHASE I RI

ORMET CORPORATION
HANNIBAL, OHIO

MONITORING WELL EVACUATION DATA
ORMET CORPORATION
HANNIBAL, OHIO

MONITORING WELL NO.	DATE	EVACUATION METHOD	TIME	pH	COND.	TEMP. C	GALLONS REMOVED
MW-42s	6/6/88	bailer	2:32 pm	8.68	5900	20.1	5
			2:44	8.64	4330	19.1	10
			2:57	8.55	3700	19.1	15
			3:07	8.62	3440	19.0	20
			3:15	8.63	3310	19.4	25
			3:29	8.60	3020	19.0	30
	6/7/88		8:59	8.91	1230	17.4	35
			9:32	8.87	1370	18.5	40
			9:42	8.83	1400	18.0	45
			9:48	8.83	1420	18.3	50
			10:08	8.79	1480	18.5	55
			10:15	8.73	1300	18.8	60
			11:02	8.65	1220	19.2	70
			11:20	8.69	1280	19.0	75
			11:30	8.69	1230	19.2	80
			11:54	8.67	1370	22.0	90
			2:45	8.64	1110	19.7	100
			2:54	8.55	1150	19.9	105
			3:02	8.59	1150	19.2	110
			3:37	8.43	1125	21.0	115
			3:47	8.53	1150	19.2	120
			3:58	8.57	1080	19.5	125
	6/9/88		9:37	8.47	880	14.8	130
			9:46	8.47	860	13.5	135
			9:55	8.54	920	14.4	140
			10:06	8.52	910	14.4	145
MW-42D	6/1/88	airlift	3:05 pm	7.80	580	20.0	40
			5:55	8.10	630	*23.8	225
	6/2/88		10:00	8.15	443	15.8	400
			11:35	7.90	505	14.6	575
			1:52	8.10	450	14.8	750
			3:30	8.18	490	15.6	875
			4:50	8.18	500	14.8	1025
			6:30	6.35	368	15.0	1250
MW-43s	6/9/88	airlift	1:34	6.13	361	17.8	5
				6.36	550	17.1	10
				6.54	530	19.0	15
				7.25	610	18.9	20
				7.25	610	17.9	30
				7.32	610	17.9	40
				7.34	610	17.9	50

MONITORING WELL EVACUATION DATA
ORMET CORPORATION
HANNIBAL, OHIO

MONITORING WELL NO.	DATE	EVACUATION METHOD	TIME	pH	COND.	TEMP. C	GALLONS REMOVED
				7.37	610	17.2	60
				7.31	610	17.2	70
				7.37	600	17.8	80
				7.28	600	17.2	90
				7.35	600	17.2	100
			2:20	7.32	600	17.2	110
				7.33	610	17.8	130
MW-43D	6/9/88	airlift	10:57	7.83	379	17.7	1
			11:43	7.52	470	18.2	150
			1:20	7.54	445	18.5	450
MW-44s	6/9/88	bailer	3:07	6.52	620	18.0	5
				6.52	600	18.0	10
				6.35	600	17.7	15
				6.63	600	18.3	20
				6.23	600	18.0	25
			4:13	6.25	600	19.4	30
	6/10/88		8:57	6.40	550	13.9	35
				6.43	520	14.7	40
			9:32	6.44	530	16.1	50
				6.53	530	15.2	55
			10:51	6.36	550	16.6	60
			11:14	6.55	550	18.0	65
			11:32	6.60	550	17.0	70
			11:45	6.53	530	17.0	75
			11:57	6.45	550	17.2	80
MW-44D	6/3/88	airlift	10:15	7.90	343	17.5	5 - 10
			11:48	7.72	342	18.0	100
			2:04	7.95	372	18.0	325
			3:38	7.85	339	16.9	425
			4:39	7.93	352	17.0	500
	6/6/88		9:37	7.80	352	19.0	500
			11:52	7.75	386	21.1	725
	6/7/88		8:07	7.68	359	17.1	750
			9:13	7.94	362	18.2	850
			10:27	7.93	380	19.9	995
			11:39	7.90	385	21.0	1100
			*1:42	8.00	429	26.0	1300

* Taken from surface of tank

APPENDIX M

INSTALLATION AND CONSTRUCTION DATA FOR DISPOSAL POND PERIMETER SOIL BORINGS AND PIEZOMETERS

ORMET CORPORATION
HANNIBAL, OHIO

APPENDIX M-1	Boring Logs for Disposal Pond Perimeter Soil Borings
APPENDIX M-2	Construction Logs for Disposal Pond Perimeter Piezometers

APPENDIX M-1

BORING LOGS FOR DISPOSAL POND PERIMETER SOIL BORINGS

ORMET CORPORATION
HANNIBAL, OHIO

GERAGHTY & MILLER, INC.
Ground-Water Consultants

R0738H08-BORLOG-0028

SAMPLE/CORE LOG

Boring/Well ppb-01 Project/No. ORMET / R0738 H08 Page 1 of 4

Site Location Hannibal, OHIO Drilling Started 3/11/88 Drilling Completed 3/11/88

Total Depth Drilled 36 feet Hole Diameter 8 inches Type of Sample/Coring Device split spoon

Length and Diameter of Coring Device 2' x .2' Sampling Interval Cont. feet

Land-Surface Elev. 663.54 feet ☒ Surveyed ☐ Estimated Datum MSL

Drilling Fluid Used — Drilling Method H.S.A.

Drilling Contractor Pennsylvania Drilling Co. Driller R. Waddel Helper Kurt W.

Prepared By J.B. Naser Hammer Weight 140 # Hammer Drop 30 inches

Sample/Core Depth (feet below land surface) From	To	Core Recovery (feet)	Time/Hydraulic Pressure or Blows per 6 inches	Sample/Core Description
0.0	2.0	.6	1/1/2/2	top .3 organic top soil; (bottom .3) 85% clay;
				15% med-coarse, sub-rounded, sub-angular,
				gravel; mod. dense; med brown; dry
2.0	4.0	1.0	1/6/8/15	95% clay; 5% med, sub-rounded,
				gravel; dense; dry; wx sandstone
				frags; med brown
4.0	6.0	1.6	5/12/8/14	90% clay; 5% med, sub-rounded, gravel;
				5% v. fine sand; dense; dry; S.S frags
6.0	8.0	1.2	6/12/14/6	90% clay; 5-7% v. fine, sub-rounded,
				sand; trace-3% med, sub-rounded,
				gravel; dense; med brown; dry
8.0	10.0	1.8	6/6/13/21	top (1.6) 90% clay; 5-7% med, sub-rounded,
				gravel; 3% v. fine, sand; (bottom .2)
				black, carbon material, v. fine sand;
				med brown; dense; dry; lt. brown mottling
10.0	12.0	1.0	15/24/10/11	40% med. coarse, sub-angular (carbon?)
				frags; 40% med-coarse, sub-rounded;
				sub-angular, sand; 10% silt & clay;
				10% yellow rock frags; mod. dense; dry;
				poorly sorted; top .2' clay dk gray / black

BORLOG-0028 (CONT.)

GERAGHTY & MILLER, INC.
Ground-Water Consultants

SAMPLE/CORE LOG (Cont.d)

3/11/88

Boring/Well ppb-01

Prepared By J. B. Naser

Sample/Core Depth (feet below land surface) From	To	Core Recovery (feet)	Time/Hydraulic Pressure or Blows per 6 inches	Sample/Core Description
12.0	14.0	.3	11/8/3/3	.3'; brick frag in spoon
14.0	16.0	.2	1/7/12/40	50% med-coarse, sub-rounded,
				sub-angular, sand; 50% med-
				coarse, sub-angular, rock frags
				[slag]; lt. gray rock wedged
				in spoon; v. dense, dry; dk gray; dry
16.0	18.0	0	10/12/13/14	No sample, granulated slag;
				v. dense; lt gray
18.0	20.0	1.6	7/16/17/17	assorted debree; 60% med-
				coarse, sub-rounded, sub-angular
				gravel; 25-35% med-coarse;
				sub-angular; sub-rounded; sand;
				5% slag frags; dark gray;
				mod. dense; saturated; poorly
				sorted
20.0	22.0	1.6	5/17/24/23	60% med-coarse, sub-angular,
				sub-rounded; gravel; 30%
				med-coarse, sub-rounded, sand;
				10% silt; saturated; loose,
				poorly sorted, dk. brown

GERAGHTY & MILLER, INC.
Ground-Water Consultants

SAMPLE/CORE LOG (Cont.d)

Boring/Well ppb-01

Prepared By J. B. Naser

Sample/Core Depth (feet below land surface) From	To	Core Recovery (feet)	Time/Hydraulic Pressure or Blows per 6 inches	Sample/Core Description
22.0	24.0	1.2	19/17/18/14	60% med-coarse, sub-rounded;
				sub-angular, gravel; 40%
				med-coarse, sub-rounded, sub-angular,
				sand; saturated, loose, dk brown,
				poorly sorted
24.0	26.0	1.4	6/6/9/13	60% med-coarse, sub-angular,
				gravel; 40% med-coarse,
				sub-rounded, sand; saturated;
				dk brown; loose; poorly sorted
26.0	28.0	1.2	12/16/17/13	60% med-coarse, sub-angular,
				sub-rounded, gravel; 40%
				med-coarse, sub-rounded,
				sand; mod. dense; poorly
				sorted; saturated, dk. brown
28.0	30.0	.8	6/10/12/8	rock wedged in spoon; 60%
				med-coarse, sub-rounded; sub-
				angular, sand; 40% med-coarse,
				sub-rounded, gravel; mod. dense;
				saturated, dk brown; poorly sorted
30.0	32.0	2.0	8/8/8/9	80% med-coarse, sub-rounded,
				sand; 20% coarse, well rounded, gravel;
				soupy (saturated), med brown;
				poorly sorted.

GERAGHTY & MILLER, INC.
Ground-Water Consultants

BORLOG-0028(CONT.)

SAMPLE/CORE LOG (Cont.d)

Boring/Well ppb-01

Prepared By J. B. Naser

Sample/Core Depth (feet below land surface) From	To	Core Recovery (feet)	Time/Hydraulic Pressure or Blows per 6 Inches	Sample/Core Description
32.0	34.0	1.2	7/6/5/4	75-80% med, sub-rounded,
				gravel; 20-25% med-coarse,
				sub-rounded, sand; saturated;
				dk brown; poorly sorted;
				mod. dense
34.0	36.0	.8	11/7/8/14	70-80% med-coarse, sub-rounded,
				gravel; 20-30% med-coarse,
				sand; saturated; mod. dense,
				dk brown; Poorly sorted
36.0	38.0	1.4	15/13/15/15	40% med-coarse, sub-rounded,
				gravel; 60% med-coarse,
				sub-rounded, sub-angular,
				sand; mod. dense, saturated,
				poorly sorted, dk brown.

GERAGHTY & MILLER, INC.
Ground-Water Consultants

R0738H08- BORLOG-0029

SAMPLE/CORE LOG

Boring/Well PPb-02 Project/No. ORMET / R0738H08 Page 1 of 7

Site Location Hannibal, OHIO Drilling Started 3/14/88 Drilling Completed 3/15/88

Total Depth Drilled 56 feet Hole Diameter 8 inches Type of Sample/Coring Device split spoon

Length and Diameter of Coring Device 2' x .2' Sampling Interval Cont. feet

Land-Surface Elev. 662.75 feet ☒ Surveyed ☐ Estimated Datum MSL

Drilling Fluid Used — Drilling Method HSA

Drilling Contractor Pennsylvania Drilling Co. Driller R. Waddell Helper Kurt W.

Prepared By S. B. Naser Hammer Weight 140# Hammer Drop 30 inches

Sample/Core Depth (feet below land surface) From	To	Core Recovery (feet)	Time/Hydraulic Pressure or Blows per 6 inches	Sample/Core Description
0.0	2.0	.5	1/3/2/5	85-90% clay; 5-7% med, sub-rounded,
				gravel; 5% v. fine sand; .2' ground
				cover, mod dense; med brown; dry
2.0	4.0	1.2	4/6/9/13	85-90% clay; 5% med, sub-rounded,
				gravel; 5% v. fine sand; mod. dense,
				med brown; dry; well sorted
4.0	6.0	1.4	4/8/20/23	75-85% clay; 5-10% v. fine, sand;
				5-10% med-coarse, sub-rounded, gravel,
				poorly sorted; dry; dense, med brown
6.0	8.0	1.6	7/9/8/56	(7.5) hit rock [6 - 7.2] 75-85% clay;
				10% v. fine sand; 5-10% med-coarse,
				sub-rounded, gravel; .4 slag; 60-70%
				rock frags; 90% med-coarse, sub-rounded,
				sand; poorly sorted; dry; med brown, mod. dense
8.0	10.0	1.4	16/22/21/16	40% med-coarse, sub-rounded, sub-angular,
				gravel (slag, charcoal, glass), 40% soil;
				20% med-coarse, sub-rounded, sub-angular,
				sand; mod. dense, dry; dark gray/black;
				poorly sorted.

GERAGHTY & MILLER, INC.
Ground-Water Consultants

3/14/88

SAMPLE/CORE LOG (Cont.d)

Boring/Well PPb-02

Prepared By J.B. Naser

Sample/Core Depth (feet below land surface) From	To	Core Recovery (feet)	Time/Hydraulic Pressure or Blows per 6 inches	Sample/Core Description
10.0	12.0	1.4	13/12/11/8	black fill material consisting
				mostly of sand size particles;
				mod. dense, black/dk gray; dry,
				poorly sorted
12.0	14.0	—	4/6/10/2	No sample, slag material
14.0	16.0	1.0	2/2/2/37	black, fill material consisting
				mostly of sand size particles;
				30% coarse, sub-rounded, gravel;
				v. moist/saturated; darkgray/black,
				mod dense; poorly sorted, s.s. frag
				in spoon tip
16.0	18.0	1.0	20/25/13/13	granite stuck in tip; .5 v. moist,
				black fill material, consisting
				mostly of sand size particles.
				[lower .3] pale green s. stone;
				mod dense, poorly sorted; dk black,
				dry.
18.0	20.0	1.0	10/11/23/16	.5 pale green, s.s frags; lower
				.5 60% med-coarse, sub-rounded,
				gravel; 40% med-coarse, sub-
				rounded, sub-angular, sand;
				mod. dense, top portion moist;
				poorly sorted, med brown

GERAGHTY & MILLER, INC.
Ground-Water Consultants

3/14/88

SAMPLE/CORE LOG (Cont.d)

Boring/Well ppb-02

Prepared By J. B. Naser

Sample/Core Depth (feet below land surface) From	To	Core Recovery (feet)	Time/Hydraulic Pressure or Blows per 6 inches	Sample/Core Description
20.0	22.0	1.0	4/5/10/11	80-85% med-coarse, sub-rounded,
				sub-angular, sand; 15-20%
				med-coarse, sub-rounded, gravel
				(pebbles); mod dense; poorly
				sorted, med brown, damp;
				at lower end .5 thin bands
				of black, carbon material
22.0	24.0	.8	2/2/4/4	85% med-coarse, sub-rounded,
				sand; 15% fine, sub-rounded
				gravel; well sorted; damp,
				med brown; mod. dense; thin
				carbon bands at bottom.
24.0	26.0	1.0	4/4/8/9	70-80% v. fine-fine, sub-angular,
				sand; 20-30% clay & silt; well
				sorted; mod. dense, damp,
				med. brown; trace of fine
				gravel at bottom; thin carbon
				layers, through out
26.0	28.0	1.0	3/5/9/10	70% med-coarse, sub-angular,
				sand; 30% fine-med, gravel;
				mod dense; poorly sorted;
				med brown/mixed w/ carbon
				material, moist

GERAGHTY & MILLER, INC.
Ground-Water Consultants

3/14/88

SAMPLE/CORE LOG (Cont.d)

Boring/Well PPb-02

Prepared By J. B. Naser

Sample/Core Depth (feet below land surface) From	To	Core Recovery (feet)	Time/Hydraulic Pressure or Blows per 6 inches	Sample/Core Description
28.0	30.0	.8	5/0/13/13	60-70% med-coarse, sub-angular,
				sand; 30-40% fine-med, sub-
				rounded, gravel; poorly sorted;
				mod. dense; med brown; moist
30.0	32.0	1.0	4/8/11/11	70% fine-coarse, sub-angular,
				sand; 30% fine-med, sub-rounded,
				gravel (pebbles); mod. dense,
				moist; poorly sorted, med brown,
				s.s. frags present near bottom
32.0	34.0	.4	4/10/12/14	80% med-coarse, sub-angular,
				sand; 20% fine-med, sub-rounded,
				gravel; mod. dense, moist,
				med brown/black (carbon material)
34.0	36.0	1.4	8/14/16/17	85-95% fine-med, sub-rounded,
				sand; 5-15% fine, sub-rounded,
				gravel; s.s. frags present;
				mod dense, med/light brown,
				well sorted; damp
36.0	38.0	1.6	9/16/22/23	top .6 85-95% fine-med, sub-
				rounded, sand; 5-15% fine,
				sub-rounded, gravel; mod dense,
				well sorted damp

GERAGHTY & MILLER, INC.
Ground-Water Consultants

3/14/88

SAMPLE/CORE LOG (Cont.d)

Boring/Well ppb-02

Prepared By J.B. Naser

Sample/Core Depth (feet below land surface) From	To	Core Recovery (feet)	Time/Hydraulic Pressure or Blows per 6 inches	Sample/Core Description
36.0	cont 38.0	1.6	9/14/22/23	(37-38) 50-60% med-coarse,
				sub-rounded, gravel; 40%
				fine-med, sub-rounded, sand;
				some pale green/ss; damp; poorly
				sorted; mod dense; med brown;
				trace of black carbon material
38.0	40.0	1.4	13/17/38/46	50-60% med-coarse, sub-rounded,
				gravel; 40% fine-med, sub-rounded,
				sand; s.s. frags throughout,
				carbon material in spoon debree;
				mod dense; poorly sorted, damp,
				med brown
40.0	42.0	1.4	13/19/21/13	90% fine-medium, sub-rounded,
				sand; 10-15% fine-med, sub-
				rounded, gravel (pebbles);
				mod dense; s. damp, well
				sorted, med brown
42.0	44.0	1.2	7/28/28/27	60% fine-med, sub-angular,
				sand; 30% fine-med, sub-rounded,
				gravel; 10% silt; s.s. frags
				throughout; 2 sets of v. thin
				black carbon bands; dense,
				med brown, sl-mottling red/brown

GERAGHTY & MILLER, INC.
Ground-Water Consultants

3/14/88

SAMPLE/CORE LOG (Cont.d)

Boring/Well ppb-02

Prepared By J. B. Naser

Sample/Core Depth (feet below land surface) From	To	Core Recovery (feet)	Time/Hydraulic Pressure or Blows per 6 inches	Sample/Core Description
44.0	46.0	.7	18/38/70/52	70-80% fine-med, sub-rounded,
				sand; 20% fine-med, sub-rounded
				gravel; 5-10% silt; poorly
				sorted; mod dense, moist,
				med brown, copper wire
				present, large limestone wedged
				in trap
46.0	48.0	1.3	9/15/18/19	60-65% fine-coarse, sub-rounded
				gravel; 30% fine-med, sub-rounded
				sand; 5% silt; mod. dense,
				poorly sorted, saturated, med brown
48.0	50.0	1.8	18/20/20/28	50% fine-med, sub-rounded,
				sub-angular, gravel; 50%
				med-coarse, sub-rounded, sand;
				mod dense; poorly sorted;
				med brown; saturated
50.0	52.0	1.8	18/25/32/39	50% fine-med, sub-rounded,
				gravel; 50% med-coarse,
				sub-rounded, sand; mod dense,
				poorly sorted, med brown, saturated.
52.0	54.0	1.2	18/28/36/49	50% fine-med, sub-rounded,
				gravel; 50% med-coarse, sub-rounded,
				sand; mod. dense; poorly sorted, med brown,
				saturated; s.s. throughout.

H_2O Table ~44.5

-188

BORLOG-0029 (CONT.)

GERAGHTY & MILLER, INC.
Ground-Water Consultants

3/15/88

SAMPLE/CORE LOG (Cont.d)

Boring/Well PPb-07

Prepared By J.B. Naser

Sample/Core Depth (feet below land surface) From	To	Core Recovery (feet)	Time/Hydraulic Pressure or Blows per 6 inches	Sample/Core Description
54.0	56.0	1.2	24/23/2 :23	50% fine-med, sub-rounded,
				gravel; 50% med-coarse,
				sub-rounded, sand; mod. dense,
				poorly sorted, med brown,
				saturated.

GERAGHTY & MILLER, INC.
Ground-Water Consultants

R0738H08-BORLOG-0030

SAMPLE/CORE LOG

Boring/Well PPB-03 Project/No. R0738H08 Page 1 of 2

Site Location ORMET-Hannibal, OH Drilling Started 3/17/88 Drilling Completed 3/17/88

Total Depth Drilled 24.0 feet Hole Diameter 8.0 inches Type of Sample/Coring Device split-spoon

Length and Diameter of Coring Device Sampling Interval continuous every 2 feet

Land-Surface Elev. 662.86 feet ☒ Surveyed ☐ Estimated Datum mean sea level

Drilling Fluid Used None - fresh water to flush sand from augers Drilling Method HSA

Drilling Contractor Pennsylvania Drilling Co. Driller Russ Waddell Helper Kurt Waddell

Prepared By K. Wells Hammer Weight 140 Hammer Drop 30 inches

Sample/Core Depth (feet below land surface) From	To	Core Recovery (feet)	Time/Hydraulic Pressure or Blows per 6 inches	Sample/Core Description
0.0	2.0	0.8	1/3/1/5	CLAY (100%) orange-brown, very cohesive, upper 2" contains silt (trace) — some color mottling between reddish brown & orange
2.0	4.0	1.1	8/13/11/15	SILTY CLAY (100%) orange-brown, compact — contains some leaf litter and rootlets — some sandy light (colored) mottles — dry
4.0	6.0	1.2	8/7/10/10	CLAY (100%) reddish-orange brown — becomes sandier in lower 6-8" — sandy patches of weathered sandstone fragments — weathering to kaolinite? — dry
6.0	8.0	1.1	14/16/18/23	SANDY CLAY (100%) orange-brown, with weathered sandstone fragments — some light tan kaolinite? — dry
8.0	10.0	1.8	12/16/17/16	SANDY CLAY (100%) orange-brown, with weathered sandstone fragments — sandy lenses more compact than above.
10.0	12.0	1.4	5/8/7/7	CLAY (60%) orange-brown, cohesive; sand (40%) fine to medium grained, orange-brown, poorly sorted, subrounded — ~ 3" of black fill material in shoe of spoon — dry
12.0	14.0	1.9	62/39/22/15	FILL (80%) black, fine-grained with few rock fragments; clay (20%) orange-brown, cohesive — dry
14.0	16.0	0.4	2/5/3/9	FILL (100%) black, fine-grained with few rock fragments — dry
16.0	18.0	0.4	6/10/11/8	FILL (100%) black, fine-grained with rock fragments — dry
18.0	20.0	0.3	3/5/4/4	[illegible] sand (10%) coarse-grained, moist, poorly sorted with some large pebbles

GERAGHTY & MILLER, INC.
Ground-Water Consultants

SAMPLE/CORE LOG (Cont.d)

Boring/Well PPB-03

Prepared By K. Wells

Sample/Core Depth (feet below land surface) From	To	Core Recovery (feet)	Time/Hydraulic Pressure or Blows per 6 inches	Sample/Core Description
20.0	22.0	1.3	2/3/5/6	GRAVEL (70%) dark brown, poorly sorted, medium-grained, rounded; sand (30%) coarse-grained, orange to brown, subrounded, poorly sorted — moist
22.0	24.0	1.5	5/7/6/11	SAND (90%) coarse-grained, medium brown, subrounded, poorly sorted; gravel (10%) fine-grained, rounded, poorly sorted — damp with ~ 1" black banded material (natural organics or fill?) — a few large sandstone fragments
24.0	26.0	1.2	6/9/10/7	SAND (50%) coarse-grained, rounded, poorly sorted, medium-brown; gravel (50%) medium-brown, subangular to subrounded, poorly sorted — damp with large sandstone fragments

GERAGHTY & MILLER, INC.
Ground-Water Consultants

R0738H08- BORLOG -0031

SAMPLE/CORE LOG

Boring/Well PPB-04 Project/No. ORMET / R0738H08 Page 1 of 3

Site Location HANNIBAL, OHIO Drilling Started 10:30AM 3-21-88 Drilling Completed 8:30A 3-22-88

Total Depth Drilled 57' feet Hole Diameter 8 inches Type of Sample/ Coring Device SPLIT SPOON

Length and Diameter of Coring Device 2' X 2" Sampling Interval CONTINUOUS feet

Land-Surface Elev. 661 feet ☐ Surveyed ☒ Estimated Datum MSL

Drilling Fluid Used NONE Drilling Method HSA

Drilling Contractor PA DRILLING Driller ____ Helper ____

Prepared By R.L. FARGO Hammer Weight 140# Hammer Drop 30 inches

Sample/Core Depth (feet below land surface) From	To	Core Recovery (feet)	Time/Hydraulic Pressure or Blows per 6 inches	Sample/Core Description
0	2	.75	2/4/5/4	CLAY(60%); ROCK FRAGMENTS(40%, SILTY SS,
				UP TO 1", ANGULAR; BROWN; DRY
2	4	1.2	3/6/8/14	CLAY (40%); SILT (40%); ROCK FRAGMENTS(20%),
				SILTY SS., ANGULAR; YELLOW-BROWN; DRY
4	6	.75	11/13/15/19	FILL MATERIAL CONSISTING OF SILT, CLAY, FN. GRAVEL
				AND SS. FRAGMENTS; BROWN-YELLOW, DRY
6	8	2.0	5/5/4/19	FILL MATERIAL OF SILT, CLAY, FN. SAND, AND SS.
				FRAGMENTS; BROWN-YELLOW, DRY; BLACK CARBON
				MATERIAL W/TRACE OF WHITE-WHITE MATTER
				AT 8'.
8	10	2.0	19/30/15/13	FILL MATERIAL; BLACK, SILT TO SAND-SIZED MATERIAL.
				DRY COULD BE CRUSHED ANDDE BLOCK.
10	12		19/40/63/34	FILL MATERIAL: UPPER 1': BLACK, SILT TO SAND SIZE
				WITH RED BRICK FRAGMENTS.
				LOWER 1': SS. FRAGMENTS AND CHERT GRAVEL
				IN MATRIX OF SILT AND CLAY, YELLOW-TAN
				DRY.
12-14		1.65	9/9/10/8	upper 1': Fill material, silt to sand sized
				material
				lower 1' 50-60% med-coarse sub-rounded,
				sand, 20% fine-med, sub rounded gravel, 20% clay:
				med brown, med dense, poorly sorted, dry

GERAGHTY & MILLER, INC.
Ground-Water Consultants

3/21/99

SAMPLE/CORE LOG (Cont.d)

Boring/Well PPb-04

Prepared By R. Fargo

Sample/Core Depth (feet below land surface) From	To	Core Recovery (feet)	Time/Hydraulic Pressure or Blows per 6 inches	Sample/Core Description
14.0	16.0	1.2	2/1/2/1	SAND(70-80%), MED., SUB.RD., WELL SORTED;
				CLAY(TRACE-10%), GRAVEL(10-20%), FN. TO
				MED., SUB.RD.; GREY-BROWN, MOIST.
16.0	18.0	1.5	1/4/12/19	TOP 1.0': SAND(70-80%), FN. TO MED., SUB
				RD.; CLAY(TRACE-10%); GRAVEL(10-20%)
				FN. TO MED.; MOIST; GREY-BROWN
				BOTTOM .5': CLAY(60%); GRAVEL(20-30%)
				FN. TO MED.; SAND(10-20%) FN. TO MED
				GREY-BROWN; DRY
18.0	20.0	1.0	5/6/9/7	SILT(60%); SAND(10-20%) V. FN. → FN;
				GRAVEL(10-20%), FN. TO MED. WELL
				RD.; GREY; DRY.
20.0	22.0	1.8	2/4/5/6	TOP 1': SILT(60%) [illegible]
				TO FN; GRAVEL (20-[illegible]
				GREY; DAMP
				BOTTOM .8': SAND (60%), V. FN., WELL RD.;
				WELL SORTED; CLAY(40%); [illegible]
				SOME [illegible] MATERIAL ([illegible])
				DAMP
22.0	24.0	1.0	1/2/5/7	SAND(50-60%), V. FN., SUB.RD.; CLAY
				(40-50%); DK. GREY; DRY

GERAGHTY & MILLER, INC.
Ground-Water Consultants

SAMPLE/CORE LOG (Cont.d)

Boring/Well PPB-04

Prepared By R. FARGO

Sample/Core Depth (feet below land surface) From	To	Core Recovery (feet)	Time/Hydraulic Pressure or Blows per 6 inches	Sample/Core Description
24.0	26.0	.5	2/5/6/7	SAND(80-90%), MED. TO COARSE; SUB. RD.
				TO SUB. ANG.; GRAVEL(10-20%), FN. TO
				COARSE, SUB. RD.; [illegible]
				[illegible]
30.0	32.0	1.1	2/5/5/5	SAND(50-60%), MED. TO COARSE, SUB. RD.;
				GRAVEL (40-50%), FN. TO COARSE, SUB. RD.
				ROUNDED, BROWN; TAPP
35.0	37.0	1.0	2/5/4/3	GRAVEL(80%), FN. TO COARSE, SUB. RD. TO RD.;
				SAND (10-20%), COARSE, SUB. RD. TO
				SUB. ANG.; CLAY (TRACE TO 10%);
				BROWN; WET
40.0	42.0	1.0	5/8/7/5	GRAVEL(50-60%), FN. TO COARSE, SUB. RD.;
				SAND(30-40%), MED. TO COARSE, SUB. RD.;
				SILT & CLAY (TRACE - 10%); BROWN;
				SAMPLE IS WET
45.0	47.0	.5	5/9/10/11	GRAVEL (60-70%), FN. TO COARSE, SUB. RD.;
				SAND(20-30%), MED. TO COARSE, SUB. RD.;
				SILT & CLAY (TRACE - 10%); BROWN;
50.0	52.0			SAMPLE IS WET
50.0	52.0	1.0	5/8/10/9	GRAVEL [illegible]
				[illegible]
				[illegible]
				[illegible]
55.0	57.0		10/12/15/12	

GERAGHTY & MILLER, INC.
Ground-Water Consultants

R0738H08-BORLOG-0032

SAMPLE/CORE LOG

Boring/Well ppb-05 Project/No. ORMET / R0738H08 Page 1 of 5

Site Location Hannibal, Ohio Drilling Started 12:41 3/23/88 Drilling Completed 11:48 3/24/88

Total Depth Drilled 64 feet Hole Diameter 8 inches Type of Sample/Coring Device Split spoon

Length and Diameter of Coring Device 2" x 2' Sampling Interval Cont. feet

Land-Surface Elev. 661.55 feet ☒ Surveyed ☐ Estimated Datum MSL

Drilling Fluid Used — Drilling Method H.S.A

Drilling Contractor Pennsylvania Drilling Co. Driller Russ Waddell Helper Kurt W.

Prepared By J. B. Naser Hammer Weight 140# Hammer Drop 30 inches

Sample/Core Depth (feet below land surface) From	To	Core Recovery (feet)	Time/Hydraulic Pressure or Blows per 6 inches	Sample/Core Description
0.0	2.0	.7	1/3/2/3	40% med-coarse, sub-rounded, sub-angular, gravel; 50-55% clay; 5% v. fine sand; mod. dense; dry; poorly sorted; med brown
2.0	4.0	—	1/2/3/4	No recovery
4.0	6.0	1.3	2/3/6/6	80-85% clay; 5% v. fine-sand; 5% fine-med, sub-rounded, gravel; mod. dense; dry, redish brown, poorly sorted.
6.0	8.0	1.6	3/3/3/5	80-85% clay; 5% v. fine, sub-rounded, sand; 5% fine-med, sub-rounded, gravel; mod. dense; dry; redish brown, poorly sorted.
8.0	10.0	1.8	3/5/7/8	80-85% clay; 5% v. fine, sub-rounded, sand; 5% fine-med, sub-rounded, gravel; mod. dense; dry; redish brown; poorly sorted; lower .2' mixed w/ dark gray (carbon) material
10.0	12.0	1.2	5/60/50/.2	top .5 - 80-85% clay; 5% v. fine; sub-rounded sand; 5% fine-med, sub-rounded, gravel; mod. dense, dry, redish brown / dark gray lower .7 (fill), gravel, s.s frags, brick

GERAGHTY & MILLER, INC.
Ground-Water Consultants

BORLOG-0032(CONT.)

SAMPLE/CORE LOG (Cont.d)

Boring/Well ppb-05

Prepared By J. B. Naser & R. Fargo

3/23/88

Sample/Core Depth (feet below land surface) From	To	Core Recovery (feet)	Time/Hydraulic Pressure or Blows per 6 inches	Sample/Core Description
10.0	12.0	1.2	5/60/50/.2	; v. dense, dry, poorly sorted; lt. gray / brown
12.0	14.0	1.8	20/16/22/25	top .5, fill material; lower 1.3 – 40%
				v. fine - med, sub-rounded, sand; 30 - 40%
				fine - med, sub-rounded, gravel; 10-20%
				silt & clay; v. dense, poorly sorted;
				gray / brown; dry
14.0	16.0	1.5	5/5/5/3	60-70% fine - coarse, sub-rounded, sand;
				20% fine - med, sub-rounded (pebbles) gravel;
				10-15% clay & silt; med brown; mod dense,
				lower .5 damp / top 1.0 dry; poorly sorted
16.0	18.0	1.5	WOR/1'/1/2	50 - 60% fine - coarse, sub-rounded, sand;
				30 - 35% clay; 15-20% fine - med, sub-rounded,
				gravel; v. damp; loose; gray / brown;
				poorly sorted.
18.0	20.0	.5	1/2/1/2	sand (50%), med to coarse, sub-rounded;
				clay (30%); Gravel (10-20%) fine, rounded;
				s.s. frags. (10%); tan-brown; damp
20.0	22.0	.8	WOR/1'/1/1'	sand (60-70%), fine - to med, sub-rounded,
				sub-angular, well sorted; clay & silt (30-40%);
				trace gravel, moist
22.0	24.0	1.2	WOR/1.5'/3/5'	Sand (60-70%); fine - med; sub-rounded, sub-
				angular; clay & silt (20-30%); gravel (10-20%),
				fine - coarse, well rounded; brown, damp.
				Red brick frag. (?) in tip of spoon.

GERAGHTY & MILLER, INC.
Ground-Water Consultants

SAMPLE/CORE LOG (Cont.d)

Boring/Well ppb-05

Prepared By J.B. Naser & R. Fargo

Sample/Core Depth (feet below land surface) From	To	Core Recovery (feet)	Time/Hydraulic Pressure or Blows per 6 inches	Sample/Core Description
24.0	26.0	1.5	WOR/1'/4/5	Top 1': Sand (50%), fine, sub-rounded, well
				sorted; clay & silt (40%); gravel (10%),
				fine-med; well rounded; brown; damp
				Botton .5': Rock fragments, sand & silt, black,
				wet, also traces of woody fragments
26.0	28.0	1.5	WOR/.3/1/1/1	Sand (60-70%); fine-med; sub-rounded,
				gravel (20%), fine-to coarse, well-rounded;
				clay (10-20%) brown; water on rods at
				25'
28.0	30.0	2.0	WOR/1.5'/1	Sand (60%), fine, sub-rounded, well-sorted;
				gravel (20%), fine-to coarse, well-rounded;
				clay (20%); brown, wet
30.0	32.0	.5	WOR/1/1'/1	Sand (70-80%), fine, sub rounded; gravel
				(10%), fine, well rounded; clay (10-20%);
				gray/brown, wet
32.0	34.0	0	1/1'/1/8	No recovery
34.0	36.0	1.5	5/3/1/2	Sand (60-70%), med, sub-rounded to rounded;
				Gravel (20-30%), fine-to coarse, rounded;
				clay (10-20%); wet; gray/brown;
				traces of roots
36.0	38.0	2.0	2/2/2/1	Sand (60-70%), med, sub.-rounded to rounded;
				gravel (20-30%) fine-to coarse, rounded; clay
				(10-20%); wet; gray to brown; traces of roots
38.0	40.0	2.0	1/5/5/4	Sand (60-70%) med, sub rounded to rounded;
				gravel (20-30%) fine to coarse, rounded;
				clay (10-20%); top 1']

GERAGHTY & MILLER, INC.
Ground-Water Consultants

SAMPLE/CORE LOG (Cont.d)

Boring/Well ppb-05

Prepared By J. Naser & R. Fargo

Sample/Core Depth (feet below land surface) From	To	Core Recovery (feet)	Time/Hydraulic Pressure or Blows per 6 inches	Sample/Core Description
38.0	40.0	2.0	1/5/5/4	(39.0 - 40.0) gray, highly organic material, clay, roots, charcoal; mod dense, wet; gray / brown
40.0	42.0	1.3	2/2/5/6	80% olive brown clay; mod dense, 10-20% silt; wet, roots
42.0	44.0	2.0	4/4/6/7	80% olive brown clay; 10-20% silt; red/brown mottling, mod. dense; wet; roots
44.5	46.5	full	Shelby Tube	70% olive brown, clay; 25-30% silt; many coarse gray mottles; mod. dense; moist
46.0	48.0	1.5	WOR/3/6	70% olive brown, clay; 25-30% silt, many coarse, gray mottles; mod dense, moist
48.0	50.0	2.0	3/6/7/10	70% olive brown, clay; 25-30% silt; many coarse, gray mottles; mod. dense, moist
50.0	52.0	2.0	2/5/6/7	70% olive brown clay; 25-30% silt; many coarse, gray mottles; mod. dense, v. moist
52.0	54.0	2.0	3/3/5/6	40-50% olive brown, clay; 50-60% silt, common gray mottles, mod. dense, v. moist
54.0	56.0	2.0	2/3/5/6	40-50% olive brown, clay; 50-60% silt; common gray mottles; 5% v. fine, sand, mod dense, v. moist
56.0	58.0	2.0	3/4/5/6	40-50% olive brown, clay; 55-65% silt; 5% v. fine, sand; common gray mottles, mod. dense, v. moist
58.0	60.0	2.0	2/3/4/5	35-45% olive brown clay; 55-65% silt; 5% v. fine sand; common gray mottles; mod. dense, v. moist

GERAGHTY & MILLER, INC.
Ground-Water Consultants

BORLOG-0032(CONT.)

SAMPLE/CORE LOG (Cont.d)

Boring/Well PPb-06

Prepared By J.B. Naser

Sample/Core Depth (feet below land surface) From	To	Core Recovery (feet)	Time/Hydraulic Pressure or Blows per 6 inches	Sample/Core Description
60.0	62.0	1.2	10/12/14/8	[top .7]: 35-40% olive brown clay; 50-60% silt; 5-10% v. fine sand; [bottom 61.5-62.0]: 60% fine-coarse, sub-rounded gravel; 50% med-coarse, sub-rounded, sand; 20% clay & silt; mod dense, moist, poorly sorted; med brown; s.s. present through out lower portion
62.0	64.0	.6	3/12/14/15	60-70% med-coarse, fragmented s.s. and gravel; 20-30% med-coarse, sub-rounded, sand; 5% silt & clay; moist, poorly sorted, dense, med brown / lt. gray s.s.
64.0	66.0	.5	80/.4	60-65% fine-med, sub-rounded, gravel; 20-25% med-coarse, soupy sand; 5-7% silty clay; dense, v. moist, poorly sorted. gray / brown

GERAGHTY & MILLER, INC.
Ground-Water Consultants

R0738H08-BORLOG-0033

SAMPLE/CORE LOG

Boring/Well FPL-06 Project/No. ORMET/ R0738 H08 Page 1 of 6

Site Location Hannibal, OHIO Drilling Started 9:25 AM 3/25/88 Drilling Completed 2:45 PM 3/28/88

Total Depth Drilled 65 feet Hole Diameter 8 inches Type of Sample/ Coring Device split spoon

Length and Diameter of Coring Device 2' x .2' Sampling Interval Cont. feet

Land-Surface Elev. 663.05 feet ☒ Surveyed ☐ Estimated Datum MSL

Drilling Fluid Used — Drilling Method HSA

Drilling Contractor Pennsylvania Drilling Co. Driller R. Waddell Helper Kurt Waddell

Prepared By J. B. Naser Hammer Weight 140# Hammer Drop 30 inches

Sample/Core Depth (feet below land surface) From	To	Core Recovery (feet)	Time/Hydraulic Pressure or Blows per 6 inches	Sample/Core Description
0.0	2.0	.9	2/2/3/4	50-60% clay; 10-15% fine-med, sub-rounded, gravel; 10% silt; 10% v. fine-fine, sand; mod. dense, dry, med. brown, poorly sorted.
2.0	4.0	.5	2/2/3/3	50-60% clay; 10-15% fine-med, sub-rounded, gravel; 10% silt; 15-20% v. fine-med, sub-angular, sand; mod. dense; dry, redish/ med brown, poorly sorted.
4.0	6.0	1.9	4/7/6/7	50-60% clay; 10-15% fine-med, sub-rounded, gravel; 10% silt; 15-20% v. fine-med, sub-angular, sand; mod. dense; poorly sorted dry
6.0	8.0	.8	7/6/6/11	60-65% clay; 10-15% fine-med, sub-angular, gravel; 15-20% v. fine-fine, sub-rounded, sand; trace silt; mod. dense, dry, redish brown, poorly sorted; s.s. rock fragments
8.0	10.0	.3	5/4/5/4	70-80% clay; 10-15% fine-med, sub-angular, gravel; 5% v. fine sand, redish brown; mod. dense, poorly sorted, sl. damp.

GERAGHTY & MILLER, INC.
Ground-Water Consultants

SAMPLE/CORE LOG (Cont.d)

Boring/Well PPB-06

Prepared By J. B. Naser

Sample/Core Depth (feet below land surface) From	To	Core Recovery (feet)	Time/Hydraulic Pressure or Blows per 6 inches	Sample/Core Description
10.0	12.0	1.0	4/4/6/8	70-80% clay; 10-15% fine-med. sub-angular, gravel. 5% v. fine sand, mod. dense, poorly sorted; dry; redish brown, s.s. frags
12.0	14.0	.8	4/ 70/.3	top .5': 70-80% clay; 10-15% fine-med, sub-angular, gravel; 5% v. fine sand; [bottom .3] slag; black/dk gray, fine sandy material, v. dense, dry
14.0	16.0	1.2	18/30/50/2	black, v. fine, sandy material, slag; v. dense, sl. damp, poorly sorted, brick fragments
16.0	18.0	1.8	8/14/10/12	top .2: same as above w/ granite frags. bottom 1.6: 50% clay; 20-30% fine-med, sub-rounded, gravel; 10-15% fine, sand; trace silt; mod dense, med brown, dry, poorly sorted.
18.0	20.0	1.6	3/4/8/7	55-65% silt; 25-30% clay; 5-10% fine-med, sub-rounded, gravel; redish/brown, mod. dense, dry, well sorted. lower .2 dark gray (carbon?); s.s. fragments
20.0	22.0	1.2	1/3/4/11	40-50% silt; 20-30% clay; 15-20% fine-med, sub-rounded, sand; 10% med, sub-rounded, gravel, mod dense, lt. gray/redish brown, dry, poorly sorted.
22.0	24.0	1.2	4/4/6/7	40-50% silt; 20-30% clay; 15-20% fine-med, sub-rounded, sand; 10% med, sub-rounded, gravel; med brown, mod dense, poorly sorted, damp

fill at 2.5

GERAGHTY & MILLER, INC.
Ground-Water Consultants

SAMPLE/CORE LOG (Cont.d)

Boring/Well ppb-06

Prepared By J.B. Naser

Sample/Core Depth (feet below land surface) From	To	Core Recovery (feet)	Time/Hydraulic Pressure or Blows per 6 inches	Sample/Core Description
24.0	26.0	1.2	4/2/2/2	50-60% silt; 25-30% clay;
				5-10% fine sand; 5% fine, sub-rounded,
				gravel; med brown, mod dense, dry,
				poorly sorted, lower .5 moist
26.0	28.0	.9	WOR/3/4/10	40-50% fine-med, sub-angular,
				gravel; 30-40% silt; 15-20%
				clay; 5-7% fine, sand; gray/brown;
				mod dense; moist; poorly sorted
28.0	30.0	1.6	4/7/10/11	50% clay; 25-30% silt;
				15-20% fine-med, sub-rounded,
				gravel; 10-15% fine-med, sand,
				mod dense, dk gray/brown; sl moist,
				poorly sorted, granite & s.s present
30.0	32.0	1.5	5/15/23/13	top .7': 56-60% silt; 25-30% clay;
				10-15% fine to med, sub-rounded,
				gravel; mod dense; med gray/brown
				lower .8: 50-60% silt; 40% v. fine,
				sand; 10% fine-med, sub-rounded,
				gravel; olive brown; mod dense;
				damp; poorly sorted
32.0	34.0	2.0	3/6/7/7	60% silt; 40% v. fine-fine, sand;
				mod. dense, gray/brown, damp,
				well sorted.

GERAGHTY & MILLER, INC.
Ground-Water Consultants

SAMPLE/CORE LOG (Cont.d)

Boring/Well ppb-06

Prepared By J.B. Naser

	Sample/Core Depth (feet below land surface) From	To	Core Recovery (feet)	Time/Hydraulic Pressure or Blows per 6 inches	Sample/Core Description
	34.0	36.0	2.0	2/4/6/7	top 1' - same as above
					bottom 1' - 50% silt; 30% v. fine
					to fine, sand, 20% clay; mod dense;
					damp; well sorted
3/28/98	36.0	38.0	1.5	2/4/6/9	85-90% clay; 5-10% silt, heavely
					mottled; med brown; moist;
					well sorted; mod dense; water line at 38.5 on rods
	38.0	40.0	2.0	3/4/5/5	60-70% silt; 30-40% clay;
					well sorted, moist; mottled;
					mod dense, med redish brown
	40.0	42.0	2.0	.25 WOR/1/1/2/5	50-60% silt; 40-50% clay;
					well sorted; mod. dense, med
					red/brown; damp; sl. mottling,
	42.0	44.0	1.0	Shelby tube	50-60% silt; 40-50% clay;
					well sorted; mod. dense, med
					red/brown, damp
	44.0	46.0	.4	Shelby tube	50-60% silt; 40-50% clay; well
					sorted; mod dense, med red/brown
					damp
	46.0	48.0	2 full	Shelby tube	75-80% clay; 10-15% silt, 5%
					v. fine, sand; mod dense; dry;
					redish/brown; well sorted.

GERAGHTY & MILLER, INC.
Ground-Water Consultants

SAMPLE/CORE LOG (Cont.d)

Boring/Well ppb-06

Prepared By J. B. Naser

Sample/Core Depth (feet below land surface) From	To	Core Recovery (feet)	Time/Hydraulic Pressure or Blows per 6 inches	Sample/Core Description
48.0	50.0	2.0	2/5/6/6	70-80% clay; 15-20% silt; 5%
				v. fine, sand, mod. dense, redish
				brown; sl. damp; well sorted,
				slight mottling
50.0	52.0	1.4	1/3/4/6	70-80% clay; 15-20% silt; 5%
				v. fine, sand; mod. dense,
				redish brown; sl. damp; well
				sorted, sl. mottling
52.0	54.0	2.0	WOR .25/1/3/4/4	top 1.5: 70-80% clay; 15-20% silt,
				5% v. fine, sand; mod. dense, well
				sorted; sl. damp
				bottom .5: 40% silt; 30-35% clay;
				15-20% v. fine, med, sub-rounded
				sand, mod dense, well sorted,
				trace gravel; med brown; sl. damp
54.0	56.0	1.0	WOR .25/1/2/13/9	top .7: 40% silt; 30-35% clay;
				15-20% v. fine, med, sub-rounded,
				sand
				bottom .3: sandstone; dense, dry;
				poorly sorted, lt gray/white; s.s.
				wedged in spoon.

GERAGHTY & MILLER, INC.
Ground-Water Consultants

SAMPLE/CORE LOG (Cont.d)

Boring/Well ppb-06

Prepared By J. B. Naser

Sample/Core Depth (feet below land surface) From	To	Core Recovery (feet)	Time/Hydraulic Pressure or Blows per 6 inches	Sample/Core Description
56.0	58.0	2.0	2/1/3/4	top .5: 60% v. fine to fine, sand;
				20-25% silt; 20-25% clay;
				bottom 1.5: 70-80% v. fine-fine,
				sand, well rounded; 20% silt;
				well sorted, mod. dense, damp, med brown
58.0	60.0	2.0	2/4/3/2	55-65% silt; 15-20% clay;
				15-20% v. fine to fine, sub-rounded,
				sand; mod dense; v. moist;
				well sorted, med brown; rods wet at 59.0'
60.0	62.0	1.4	10/12/16/23	50-60% fine-med, sub-rounded,
				gravel; 20-30% fine-med, sub-
				rounded, sand; 10-15% silt & clay;
				lime stone frags; saturated,
				mod dense, med brown, poorly sorted.
62.0	64.0	1.2	11/14/16/20	50-60% sub-angular, fine-med,
				gravel; 20-30% fine-med, sub-rounded,
				sand; 10-15% silt & clay; mod dense;
				poorly sorted; saturated; med brown
64.0	66.0	1.4	17/16/11/10	50-60% sub-angular, fine-med gravel;
				20-30% fine-med, sub-rounded, sand;
				10-15% silt & clay; saturated; mod dense;
				poorly sorted; med brown; sub-angular,
				gravel

GERAGHTY & MILLER, INC.
Ground-Water Consultants

R0738H08-BORLOG-0044

SAMPLE/CORE LOG

Boring/Well PPB-07 Project/No. R0738H08 Page 1 of 4

Site Location ORMET – Hannibal, OH Drilling Started 3/29/88 Drilling Completed 3/30/88

Total Depth Drilled 64.0 feet Hole Diameter 8.0 inches Type of Sample/Coring Device Split Spoon

Length and Diameter of Coring Device 2' x 2" Sampling Interval every 1.0 feet

Land-Surface Elev. 661.81 feet ☒ Surveyed Estimated Datum MSL

Drilling Fluid Used None – clean water used to flush out flowing sand from augers Drilling Method HSA

Drilling Contractor Pennsylvania Drilling Co. Driller Russ Waddell Helper Curt Waddell

Prepared By K. Wells Hammer Weight 140 lbs Hammer Drop 30 inches

Sample/Core Depth (feet below land surface) From	To	Core Recovery (feet)	Time/Hydraulic Pressure or Blows per 6 inches	Sample/Core Description
0	2	1.0	2/4/2/3	CLAY (70-80%); with sandstone and shale fragments (20-30%) — brown, dry, some rootlets and woody fragments
2	4	0.7	2/2/1/3	CLAY (80%) dry, orange-brown; sand (15%) poorly sorted, sub-rounded weathered from sandstone fragments; sandstone fragments (~5%) micaceous, orange-brown — dry
4	6	1.2	1/3/7/6	CLAY (90%) brown, cohesive; sandstone (10%) large weathered fragments with red staining (hematite?), micaceous; sand (trace) poorly sorted, subrounded — dry; ~ 0.1 ft band of black fill in 5.5' section — clay becomes mottled with brownish-red streaks
6	8	1.0	4/7/8/8	CLAY (70%) orange-brown, dry; sandstone fragments (20%) micaceous, weather stained fragments; sand (10%) weathered from fragments, poorly sorted, subrounded — dry
8	10	1.4	4/5/7/7	CLAY (80%) orange-brown, dry; sand (10-15%) orangish, poorly-sorted, subrounded; sandstone fragments (5%) highly weathered, micaceous, feldspars in sandstone weathering to light tan color — small pebbles in clay fraction — dry
Note: Fill material starts at 11.5'				
10	12	1.4	5/7/8/72	FILL (80-90%) black [carbon black?], fine-grained; clay (10-20%) orange-brown, clay only in 10-10.3' — dry with some fragments of sandstone or brick at 11.8'

GERAGHTY & MILLER, INC.
Ground-Water Consultants

BORLOG-0044 (CONT.)

SAMPLE/CORE LOG (Cont.d)

Boring/Well PPB-07

Prepared By K. Wells

Sample/Core Depth (feet below land surface) From	To	Core Recovery (feet)	Time/Hydraulic Pressure or Blows per 6 inches	Sample/Core Description
12	14	1.5	8/18/13/10	FILL (80%) black, fine-grained, dry; silt (5%) band at 13 ft interlayered with fill; concrete fragments (15%) beige, crumbly in upper 12-12.5' — dry
14	16	1.2	9/14/11/28	FILL (70%) black, fine-grained, damp; brick fragments (10%) white-tan, broken pieces; fine-gravel (20%) dark brown, poorly sorted, subrounded — dry but outer spoon coated with moist black fill
16	18	1.4	9/11/9/9	SILT (70%) fine-grained, brown, dry; sand (10%) fine to medium, poorly sorted, subangular to subrounded — siliceous gravel fragments, some secondary siliceous crystal growth in void space within gravel fragments at 17 ft — dry
18	20	1.4	14/23/60/31	SAND (70%) coarse-grained, brown, poorly sorted, subrounded; gravel (20%) medium-grained with siliceous fragments, poorly sorted, subangular; concrete? (10%) light gray with silica chips — dry medium brown
20	22	0	4/8/13/17	NO RECOVERY — rock in drive head
22	24	0.6	30/21/7/7	GRANULAR BRICK (50%) light tan, coarse-grained; fill (50%) black, fine-grained — saturated
24	26	1.6	7/12/12/13	SAND (50%) coarse-grained, brown, rounded, poorly sorted; gravel (50%) medium-grained, poorly sorted, subangular — spoon coated with saturated gray sandy material; upper foot saturated; 25.6' moist; slight odor, read < 1 ppm on OVA
26	28	1.4	7/6/5/8	SAND (50%) brown, coarse-grained, sub-rounded; gravel (30%) medium to coarse, subrounded, poorly sorted; clay (20%) brown, cohesive — upper 0.6' wet; clay content increases with depth 26.5-28' moist to damp

GERAGHTY & MILLER, INC.
Ground-Water Consultants

BORLOG-0044 (CONT.)

SAMPLE/CORE LOG (Cont.d)

Boring/Well PPB-07

Prepared By K. Wells

Sample/Core Depth (feet below land surface) From	To	Core Recovery (feet)	Time/Hydraulic Pressure or Blows per 6 inches	Sample/Core Description	
28	30	1.6	10/17/14/20	SAND (60%) rounded, brown, coarse-grained, poorly sorted, damp; gravel (40%) subrounded, brown, medium-grained, poorly sorted, damp	28.0-28.8'
				CLAY (50%) cohesive, orange-brown, damp; sand (50%) coarse-grained, rounded, orange-brown, poorly sorted, damp	28.8-29.2'
				GRAVEL (70%) medium-grained, poorly sorted, subrounded, dry; sand (30%) coarse-grained, poorly sorted, rounded — dry with charcoal or coal fragments	29.2-29.6
30	32	1.6	5/5/6/8	GRAVEL (70%) medium-grained, poorly sorted, subrounded, dry; sand (30%) coarse-grained, poorly sorted, rounded	30-30.4
				CLAY (90%) dark brown, cohesive, slightly damp; silt (10%) dark brown, slightly damp	30.4-31.6
32	34	1.9	4/5/6/7	CLAY (90%) dark brown to orange-brown with gray mottles, dry; silt (10%) dark brown — color grading into orange-brown with gray mottles in basal section (~34'), some brick fragments at 33.6'	
34	36	1.9	3/4/5/7	CLAY (90%) orange-brown, cohesive, with gray mottles, damp to dry; silt (10%) orange-brown — dry to damp	
36	38	0.4	4/6/8/8	CLAY (90%) orange-brown, with gray mottles, wet; silt (10%) orange-brown — wet; rock in spoon head prevented much recovery	
38	40	2.0	3/2/3/3	CLAY (60%) orange-brown, cohesive; silt (40%) fine-grained — wet; slightly drier in lower 6 inches (39.5-40.0')	
40	42	0		Attempted Shelby Tube sample	
42	44	0			
44	46	2.0	3/4/4/7	CLAY (60%) orange-brown; silt (40%) orange-brown — dry to damp	
46	48	1.8	2/4/9/12	CLAY (60%) orange-brown; silt (40%) orange-brown — dry to damp	

GERAGHTY & MILLER, INC.
Ground-Water Consultants

BORLOG-0044 (CONT.)

SAMPLE/CORE LOG (Cont.d)

Boring/Well PPB-07

Prepared By K. Wells

Sample/Core Depth (feet below land surface) From	To	Core Recovery (feet)	Time/Hydraulic Pressure or Blows per 6 inches	Sample/Core Description
48	50	2.0	4/7/11/13	CLAY (50-60%) orange-brown with some black weathering stains; sand (40-50%) fine-grained, poorly sorted, rounded — dry to damp
50	52	0		Shelby Tube Sample; clay (50-60%) sand (40-50%)
52	54	2.0	4/6/7/9	CLAY (50%) orange-brown, moist; sand (50%) medium-grained, rounded, poorly sorted — damp, 52-53' interval coated with wet sand
54	56	1.7	2/4/5/9	SAND (70%) brown, medium-grained, rounded; clay (30%) brown, cohesive — moist to wet, outside of sample coated with wet sand
56	58	1.9	4/5/7/8	SAND (80%) medium to coarse grained, rounded, brown, moist to wet; clay (20%) brown, cohesive — some coarse-grained sandy lenses in 57-58' interval
58	60	1.7	7/6/16/22	SAND (80%) brown, coarse-grained, poorly sorted, moist to wet; gravel (10-15%) brown, medium grained, poorly sorted; clay (5-10%) brown, cohesive — moist to wet with gravel content increasing with depth
60	62	1.9	18/29/40/41	SAND (55%) coarse-grained, rounded, brown, saturated; gravel (40%) medium-grained, brown, poorly sorted; clay (trace to 5%) brown, cohesive — wet with gravel percentage increasing with depth
62	64	1.3	24/33/35/26	GRAVEL (60%) medium to coarse-grained, brown, angular to rounded, poorly sorted; sand (40%) coarse-grained, rounded, brown — wet with large siliceous fragments

GERAGHTY & MILLER, INC.
Ground-Water Consultants

R0738H08-BORLOG-0045

SAMPLE/CORE LOG

Boring/Well PPG-08 Project/No. R0738H08 Page 1 of 4

Site Location Hannibal, OH Drilling Started 4/4/88 Drilling Completed 4/5/88

Total Depth Drilled 60 feet Hole Diameter 8.0 inches Type of Sample/Coring Device Split spoon

Length and Diameter of Coring Device 2.0 ft x 2.0 inches Sampling Interval every 1.0 feet

Land-Surface Elev. 662.72 feet ☒ Surveyed Estimated Datum MSL

Drilling Fluid Used None; clean water used to flush out flowing sand from augers Drilling Method HSA

Drilling Contractor Pennsylvania Drilling Co. Driller Russ Woddell Helper Curt Woddell

Prepared By K. Wells Hammer Weight 140 lb Hammer Drop 30 inches

Sample/Core Depth (feet below land surface) From	To	Core Recovery (feet)	Time/Hydraulic Pressure or Blows per 6 inches	Sample/Core Description
0	2	1.1	1/1/3/5	CLAY (70%) medium red-brown, very cohesive; sandstone fragments (20%) micaceous, weathering fragments; black fill (10%) fine-grained — dry with numerous rootlets in upper 0.2'
2	4	1.05	5/5/6/7	CLAY (90%) medium red-brown, compact; sandstone fragments (10%) micaceous fragments with dark black stains — dry with some blue-gray color mottling
4	6	1.9	4/4/6/9	CLAY (70%) medium red-brown, compact; sandstone fragments (20%) weathered micaceous chunks, light tan; fill (10%) black, granular and intermittent — dry
6	8	1.5	4/6/7/14	CLAY (95%) orange-brown with blue-gray mottles, compact; sandstone fragments (5%) micaceous weathered pieces — dry with some rootlets in 6-1 ft interval
8	10	2.0	6/8/9/10	CLAY (95%) orange-brown with blue-gray mottles; sandstone fragments (5%) micaceous weathered pieces — dry
NOTE: FILL ENCOUNTERED AT 11.5 ft				
10	12	1.2	5/7/9/25	CLAY (50%) orange-brown, compact with some sandy mottles; fill (50%) black, fine to medium grained — some siliceous chunky fragments in shoe of spoon — dry
12	*(13.5) 14	0.9	4/17/100	CLAY (40%) orange-brown, compact; sand (10%) orange, medium grained, poorly sorted, rounded; fill (50%) gray to black with white quartz or calcite fragments, numerous wood fragments — dry

* Rod refusal at 13.5

GERAGHTY & MILLER, INC.
Ground-Water Consultants

BORLOG-0045 (CONT.)

SAMPLE/CORE LOG (Cont.d)

Boring/Well TPB-08

Prepared By K. Wells

Sample/Core Depth (feet below land surface) From	To	Core Recovery (feet)	Time/Hydraulic Pressure or Blows per 6 inches	Sample/Core Description
14	16	1.7	6/9/14/8	FILL (100%) black, granular with brick fragments [14-14.4']
				CONCRETE (100%) light gray, fragmented [14.4-14.7']
				FILL (100%) black, fine-grained with some pebbles [14.7-15.7']
16	18	1.65	3/12/24/29	FILL (50%) black, fine-grained, gravel (50%) poorly sorted, medium-grained subrounded [16-16.7']
				CLAY (40%) orange-brown, dense; sand (40%) medium-grained, rounded, poorly sorted; gravel (20%) rounded, medium-grained, poorly sorted — dry [16.7-17.65']
18	20	1.6	6/16/21/24	SAND (60%) brown, medium-grained, rounded, poorly sorted;
				gravel (20%) medium-grained, subrounded, poorly sorted; slag (10%)
				light gray to black; clay (10%) brown — dry
20	22	1.2	8/12/18/12	SAND (50%) brown, medium-grained, rounded, poorly sorted; gravel
				(30%) brown, rounded, poorly sorted, coarse-grained; clay (20%)
				brown, compact, dense — dry
22	24	0.7	3/7/6/16	CLAY (50%) dark brown, cohesive; sand (20%) brown, rounded, poorly
				sorted, medium-grained; gravel (30%) medium-grained, poorly sorted, sub-
				rounded — slightly damp
24	26	1.1	30/20/17/14	CLAY (50%) brown, compact; sand (30%) brown, med-grained, rounded;
				gravel (20%) brown, medium-grained, subrounded, poorly sorted with
				brick fragments — dry to damp
26	28	1.8	6/9/12/18	SAND (50%) brown, fine to medium grained, rounded, poorly sorted;
				clay (30%) gray-brown, compact; gravel (20%) medium to coarse-
				grained, poorly sorted, subrounded — with a few brick fragments — dry
28	30	1.6	3/6/11/25	CLAY (70%) olive-brown, with some gray mottling, compact;
				silt (20%) olive-brown; gravel (10%) poorly sorted, subangular,
				medium-grained, some granitic pebbles — dry
			→	shoe of split spoon contains 60% sand, 30% clay, ~10% gravel

GERAGHTY & MILLER, INC.
Ground-Water Consultants

BORLOG-0045 (CONT.)

SAMPLE/CORE LOG (Cont.d)

Boring/Well PPB-08

Prepared By K. Wells

Sample/Core Depth (feet below land surface) From	To	Core Recovery (feet)	Time/Hydraulic Pressure or Blows per 6 inches	Sample/Core Description
30	32	1.9	6/7/9/9	[30-30.5] olive-brown clay (60%), sand (20%), gravel (20%)
				[30.5-31.9] CLAY (90%) olive-brown, compact; silt (10%)
				olive-brown, poorly sorted — dry
32	34	1.8	4/5/8/9	CLAY (90%) olive-brown with blue-gray mottles; silt (10%) olive-
				brown — weathered red sandstone or brick fragments in shale,
				micaceous — dry
34	36	1.9	2/5/6/7	CLAY (90%) olive-brown with blue-gray mottles; silt (10%) olive-
				brown — dry
36	38	2.0	2/4/6/10	CLAY (80%) brown with some gray mottles; silt (20%) brown-dry
38	40	1.8	2/5/5/7	CLAY (80%) brown with some gray mottles; silt (20%) brown — dry.
				with some charcoal or coaly fragments
40	42	2.0	3/3/4/5	CLAY (70-80%) medium brown with occasional gray mottling; silt
				(20-30%) brown — moist
42	44	2.0	1/3/4/4	CLAY (60%) medium-brown, no color mottling; sand (40%) fine-
				grained, rounded, poorly sorted; becomes sandier in lower foot — moist
44	46	1.6	1/1/2/3	CLAY (40%) brown, cohesive; sand (40%) very fine-grained,
				rounded; silt (20%) brown — very moist
46	48	1.8	1/3/4/6	SILT (60%) orange-brown, compact; sand (25%) very fine-grained,
				poorly sorted, rounded; clay (15%) brown, cohesive — damp to moist
48	50	0		SHELBY TUBE SAMPLE (attempted - unsuccessful)
50	52	1.7	Shelby Tube Sample	SILT (60%) orange-brown; sand (25%) very fine grained,
				rounded, poorly sorted; clay (15%) brown, cohesive — moist
52	54	2.0	3/4/5/7	SILT (60%) orange-brown; sand (25%) very fine-grained, rounded,
				poorly sorted; clay (15%) brown, cohesive — moist

GERAGHTY & MILLER, INC.
Ground-Water Consultants

BORLOG-0045 (CONT.)

SAMPLE/CORE LOG (Cont.d)

Boring/Well PPB-08

Prepared By K. Wells

Sample/Core Depth (feet below land surface) From	To	Core Recovery (feet)	Time/Hydraulic Pressure or Blows per 6 inches	Sample/Core Description
54	56	1.9	1/3/3/4	SAND (70%) fine to medium grained, rounded, poorly sorted, brown; clay (30%) brown, compact — very moist to wet; sand content increasing with depth
56	58	1.7	WOR/.25 2/2/3/4	SAND (80%) brown, medium-grained, rounded, poorly sorted; clay (20%) brown, cohesive — wet
58	60	1.6	2/6/13/18	SAND (80%) brown, medium to coarse-grained, subangular, poorly sorted; gravel (15%) medium grained, subangular, poorly sorted; clay (~5%) brown, compact — wet; sandstone cobble in shoe of split spoon

GERAGHTY & MILLER, INC.
Ground-Water Consultants

R0738H08-BORLOG-0036

SAMPLE/CORE LOG

Boring/Well ppb-09 Project/No. ORMET / R0738H08 Page 1 of 7

Site Location Hannibal, OHIO Drilling Started 1:15 PM 4/6/88 Drilling Completed 9:10 AM 4/7/88

Total Depth Drilled 70 feet Hole Diameter 8 inches Type of Sample/Coring Device split spoon

Length and Diameter of Coring Device 2' x 2' Sampling Interval Cont feet

Land-Surface Elev. 664.30 feet ☒ Surveyed ☐ Estimated Datum MSL

Drilling Fluid Used approved water source Drilling Method HSA

Drilling Contractor Pennsylvania Drilling Co. Driller R. Waddell Helper Kurt W

Prepared By J. B. Naser Hammer Weight 140 # Hammer Drop 30 inches

Sample/Core Depth (feet below land surface) From	To	Core Recovery (feet)	Time/Hydraulic Pressure or Blows per 6 inches	Sample/Core Description
0.0	2.0	1.0	1/1/2/6	top 2' - top soil, moss, roots
				(bottom 1.8) 60-70% clay; 20-30% fine-med, angular,
				gravel; 5-10% fine-med, sub-rounded, sand;
				ss frags present; mod dense; poorly sorted;
				dry; redish brown
2.0	4.0	1.2	2/4/4/6	60-70% clay; 15-20% fine-med, sub-rounded;
				sub-angular; gravel; 15-20% fine-med, sub-rounded,
				sand (s.s. frags present); mod dense;
				poorly sorted; dry; redish brown
4.0	6.0	1.4	3/4/6/8	60-70% clay; 20-30% fine-med, angular, gravel;
				5-10% fine-med, sub-rounded, sand; few
				s.s. frags; mod dense; poorly sorted; dry;
				copper brown
6.0	8.0	1.2	3/5/7/8	65-75% clay; 20-30% fine-med, sub-angular;
				sub-rounded, gravel; 5% fine, sand; mod dense;
				poorly sorted, dry; copper brown; s.s stuck in shoe
8.0	10.0	1.2	5/10/10/13	65-75% clay; 20-30% fine-med, sub-angular, sub-rounded
				gravel; 5% fine sand (s.s. present); mod dense;
				poorly sorted; dry; copper brown

4/6/88

GERAGHTY & MILLER, INC.
Ground-Water Consultants

BORLOG-0036 (CONT.)

SAMPLE/CORE LOG (Cont.d)

Boring/Well PPb-09

Prepared By J.B. Naser

Sample/Core Depth (feet below land surface) From	To	Core Recovery (feet)	Time/Hydraulic Pressure or Blows per 6 Inches	Sample/Core Description
10.0	12.0	1.5	4/7/7/13	65-75% clay; 15-20% fine-med,
				sub-rounded, sub-angular gravel;
				5% v. fine sand; 5% silt; mod
				dense; dry; poorly sorted; redish
				brown / olive brown, s.s frags
12.0	14.0	1.5	3/6/10/17	65-75% clay; 15-20% fine-med;
				sub-rounded, gravel; 5% v. fine,
				sand; 5% silt; poorly sorted;
				red/brown; mod dense, dry
				.2' shoe full of fill (med,
				well rounded, gravel; dark gray
				sand size particles
14.0	16.0	1.6	7/9/9/12	fill material; 80% olive gray
				clayie? silt; carbon material
				present, brick frags, slag material;
				15-20% fine-med, gravel; mod. dense;
				Poorly sorted; olive gray; dry
16.0	18.0	.5	8/17/17/21	brick frag in spoon; top .2'
				black, sandy fill (carbon material)
				(bottom .3) red, orange, yellow brick
				frags; dense; dry; no sorting

4/6/88

GERAGHTY & MILLER, INC.
Ground-Water Consultants

BORLOG-0036 (CONT.)

SAMPLE/CORE LOG (Cont.d)

Boring/Well ppb-09

Prepared By J.B. Naser

Sample/Core Depth (feet below land surface) From	To	Core Recovery (feet)	Time/Hydraulic Pressure or Blows per 6 inches	Sample/Core Description
18.0	20.0	1.1	9/30/19/12	40-50% fine-med, sub-rounded gravel
				25-30% clay; 10-15% fine, sub-rounded,
				sand; granite frags present; 15%
				silt; dense; gray/brown; dry; poorly
				sorted, cinders & slag
20.0	22.0	.5	5/20/23/19	rock frag in spoon.
				50-60% clay; 25-30% fine-med,
				sub-rounded gravel; 5-10% fine,
				sand, mod dense, med brown, dry
22.0	24.0	1.2	6/12/24/17	45-55% fine-med; sub-rounded,
				gravel; 30-35% clay; 15-20% fine-
				med, sub-rounded, sand; poorly
				sorted; wood fragments
24.0	26.0	1.2	WOR .5 1/7/14/13	30-40% clay; 10-15% silt [illegible] fine-med, sub-rounded, gravel
				15% fine-med, sub-rounded, sand;
				mod dense, med brown, damp; poorly
				sorted, wood fragments
26.0	28.0	1.8	4/12/16/14	25-30% clay; 25-30% fine-med,
				sub-rounded, sand; 25-30% fine-
				med, rounded, gravel; 10% silt; med
				brown, damp; mod dense, poorly
				sorted.

4/7/88

GERAGHTY & MILLER, INC.
Ground-Water Consultants

BORL06-0036 (CONT.)

SAMPLE/CORE LOG (Cont.d)

Boring/Well PPb-09

Prepared By J. B. Naser

Sample/Core Depth (feet below land surface) From	To	Core Recovery (feet)	Time/Hydraulic Pressure or Blows per 6 inches	Sample/Core Description
28.0	30.0	1.7	5/14/18/15	(top .7) 40-50% fine-med, sub-rounded,
				sand; 25-30% clay; 15-20% fine-
				med; well rounded, gravel; 5-10% silt
				(lower 1.0') 70-75% fine-med,
				sub-rounded, sand; 10-15% silt;
				5% clay; 10-15% fine, rounded
				gravel; mod dense; med brown
				w/ gray streaks; damp
30.0	32.0	1.8	5/8/8/13	(top 1.6) 50-60% silt; 30% clay;
				10% fine, well rounded, gravel;
				olive gray
				(bottom .2) 60-70% med-coarse,
				sub-rounded, sand; 20-30% fine-
				med, sub-rounded, gravel; trace
				silt & clay; damp; mod dense;
				poorly sorted, roots
32.0	34.0	1.4	5/8/9/12	60% silt; 30-40% clay; 10% fine,
				rounded gravel; olive gray; damp;
				mod-dense, well sorted; roots
34.0	36.0	1.9	3/6/9/11	60-70% clay; 15-20% silt; 10-15%
				v. fine, sand; mod dense, olive brown;
				damp, mottling

GERAGHTY & MILLER, INC.
Ground-Water Consultants

4/7/88

BORLOG-OC36(CONT.)

SAMPLE/CORE LOG (Cont.d)

Boring/Well ppb-09

Prepared By J. B. Naser

Sample/Core Depth (feet below land surface) From	To	Core Recovery (feet)	Time/Hydraulic Pressure or Blows per 6 Inches	Sample/Core Description
36.0	38.0	1.8	3/6/11/12	70-80% clay; 15-20% silt;
				5% v. fine, sand; mod dense,
				olive brown, damp; heavy mottling
38.0	40.0	2.0	4/5/9/12	80-90% clay; 10% silt; 5%
				v. fine, sand; mod dense; med
				brown; damp; heavy mottling
40.0	42.0	1.9	1/4/6/7	85-90% clay; 5-10% silt;
				mod dense; med brown; damp
42.0	44.0	1.8	1/4/5/8	70-80% clay; 15-25% silt;
				5-10% v. fine, sand; moist; mod dense;
				med brown; mottling
44.0	46.0	1.8	WOR .25/1/2/3/4	60% silt; 40% clay; mod dense;
				moist; heavy mottling; med brown
46.0	48.0	2.1	full recovery	50-55% silt; 45% clay; 5-10%
				v. fine, sand; mod dense, med brown,
				mottling
48.0	50.0	1.6	2/8/12/12	50-55% silt; 45% clay; 5-10%
				v. fine, sand; mod dense; med brown;
				saturated at top, moist at bottom
50.0	52.6	1.9	2/5/8/7	top 1.5 same as above
				(bottom .4) 30-35% silt; 30-35%
				clay; 30-40% med, sub-angular,
				sand; saturated, mod dense, med brown, well sorted

GERAGHTY & MILLER, INC.
Ground-Water Consultants

4/7/88

BORLOG-0036(CONT.)

SAMPLE/CORE LOG (Cont.d)

Boring/Well ppb-09

Prepared By J. B. Naser

Sample/Core Depth (feet below land surface) From	To	Core Recovery (feet)	Time/Hydraulic Pressure or Blows per 6 inches	Sample/Core Description
52.0	54.0	1.7	WOR 1.0'/3/4	50-60% silt; 40% clay; 10% v. fine sand;
				mod dense, med brown, well sorted; saturated/
				v. moist
54.0	56.0	1.6	WOR .6'/2/5/5	(top 1.0') 40-50% silt; 30-35% clay; 15-20%
				med-coarse, sub-rounded; saturated. mod dense;
				med brown; well sorted
				(lower .6') 40% silt; 30% clay; 30% fine, sand
				v. moist
56.0	58.0	1.8	WOR .25/1/5/5/6	(top 1.2') 50% clay; 30% silt; 20% v. fine,
				sand;
				(bottom .6') 40% clay; 30% silt; 30% fine-med;
				sub-rounded, sand; mod-dense; v. moist;
				well sorted; med-brown
58.0	60.0	1.8	1/3/5/9	35-40% fine, sub-rounded, sand; 35-40% silt;
				20-30% clay; mod dense; saturated; med-brown;
				well sorted
60.0	62.0	1.6	WOR .25/2/4/5/3	40-45% silt; 30% v. fine, sand; 20-25% clay;
				mod dense; saturated; med brown, well sorted
				(bottom .2) charcoal
62.0	64.0	1.2	4/12/19/28	top .6' - silty slop
				(bottom .6') 40-45% fine-med; sub-rounded;
				well-rounded, gravel; 40-50% fine-coarse,
				sub-rounded, sand; 10% silty clay; v. moist;
				mod dense; med brown; poorly sorted

GERAGHTY & MILLER, INC.
Ground-Water Consultants

4/7/88 – 4/8/88

BORLOG-0036 (CONT.)

SAMPLE/CORE LOG (Cont.d)

Boring/Well ppb-09

Prepared By J. B. Naser

	Sample/Core Depth (feet below land surface) From	To	Core Recovery (feet)	Time/Hydraulic Pressure or Blows per 6 Inches	Sample/Core Description
4/7/88	64.0	66.0	1.2	8/23/29/24	40-45% fine-med; sub-rounded, well-rounded; gravel
					40-50% fine-coarse, sub-rounded, sand, 10% siltyclay;
					saturated; med brown; dense; poorly sorted
4/8/88	66.0	68.0	1.0	12/26/30/20	60-70% fine-med, sub-rounded, gravel; 20-25%
					fine-med; sub-rounded, sand; 10% silt; dense,
					poorly sorted; med-brown, saturated; top .5
					soupy, material
	68.0	70.0	.8	8/8/10/12	70-80% fine-med, sub rounded, gravel; 10%
					fine-med, sub-rounded; sand; 10% silt; med-brown;
					med-dense; poorly sorted; saturated
					top of spoon full of soupy material
	70.0	72.0	1.6	14/20/30/31	(top .4') sloppy, soupy, fine sand
					(bottom 1.2')
					65-75% fine-med, sub-rounded, gravel; 15-20%
					fine-med, sub-rounded, sand; 15% silt saturated,
					med-brown, poorly sorted, dense

GERAGHTY & MILLER, INC.
Ground-Water Consultants

R0738H08-BORL06-0037

SAMPLE/CORE LOG

Boring/Well ppb-10 Project/No. ORMET / R0738 H08 Page 1 of 6

Site Location Hannibal, OHIO Drilling Started 2:44 PM 4/11/88 Drilling Completed 9:00 AM 4/13/88

Total Depth Drilled 66 feet Hole Diameter 8 inches Type of Sample/Coring Device split spoon

Length and Diameter of Coring Device 2.0' x .2' Sampling Interval cont. feet

Land-Surface Elev. 663.42 feet ☒ Surveyed ☐ Estimated Datum MSL

Drilling Fluid Used approved water source Drilling Method HSA

Drilling Contractor Pennsylvania Drilling Co. Driller R. Waddell Helper Kurt W.

Prepared By J. B. Naser Hammer Weight 140 # Hammer Drop 30 inches

Sample/Core Depth (feet below land surface) From	To	Core Recovery (feet)	Time/Hydraulic Pressure or Blows per 6 inches	Sample/Core Description
0.0	2.0	.3	2/2/2/3	65-75% clay; 5-10% v. fine, sand; 10-20%, med, sub-angular sand stone; mod dense; dry; poorly sorted; redish brown
2.0	4.0	1.2	4/3/5/8	70-75% clay; 10-20% med, sub-angular, sand stone gravel; 5% v. fine, sand; mod dense; light yellow/brown; poorly sorted.
4.0	6.0	.8	6/5/7/8	65-75% clay; 10-20% sub-angular sand stone, fragments; 5-10% v. fine, sand; dry; mod dense; poorly sorted; yellow/brown
6.0	8.0	1.8	3/7/9/10	80% clay; 20% sub-angular, med, sandstone, frags; mod dense; yellow/brown; dry; poorly sorted; sl. mottling.
8.0	10.0	1.0	3/9/5/3	65-75% clay; 10-20% sub-angular, sandstone, fragments; 5-10% v. fine, sand; dry; mod dense; poorly sorted; yellow/brown; (bottom .2) wx sand stone
10.0	12.0	1.4	1/2/4/5	80-85% clay; 15% fine-med, sub-rounded, sand stone, gravel; 5% silt; mod dense; damp; poorly sorted; redish brown / olive brown; mottling

GERAGHTY & MILLER, INC.
Ground-Water Consultants

4/11/88 -

BORLOG-0037 (CONT.)

SAMPLE/CORE LOG (Cont.d)

Boring/Well PPb-16

Prepared By J. B. Naser

Sample/Core Depth (feet below land surface) From	To	Core Recovery (feet)	Time/Hydraulic Pressure or Blows per 6 Inches	Sample/Core Description
12.0	14.0	1.5	14/21/16/20	(top .3') concrete; sand size
				particles and med, well-rounded,
				gravel
				(bottom 1.2) 60% clay; 20% silt;
				5-10% v. fine, sand; 5-10%
				fine, sub-rounded; gravel; dry,
				dense; poorly sorted; gray/brown
14.0	16.0	1.3	8/13/9/11	60% clay; 30% silt; 10% v. fine,
				sand; sandstone frags; mod-dense,
				dry; poorly sorted; redish brown;
				mottling present
16.0	18.0	1.5	3/5/4/6	25% clay; 20-30% silt; 20%
				fine-med; well-rounded, gravel;
				30% fine-med, sub-rounded, sand;
				mod dense, damp, poorly sorted,
				gray/brown
18.0	20.0	.8	3/3/2/1	30% fine-med, sub-rounded, sand;
				20% clay; 20% silt; 30% fine-med;
				sub-rounded, gravel; mod dense;
				damp; poorly sorted, med brown,
				traces of (slag?) carbon? material

Fill at 12.0

GERAGHTY & MILLER, INC.
Ground-Water Consultants

4/11/88 / 4/12/88

BORLOG-0037(CONT.)

SAMPLE/CORE LOG (Cont.d)

Boring/Well ppb-10

Prepared By J. B. Naser

	Sample/Core Depth (feet below land surface) From	To	Core Recovery (feet)	Time/Hydraulic Pressure or Blows per 6 inches	Sample/Core Description
	20.0	22.0	.8	WOR .75'/1/1	60% silt; 20% fine-med, sub-rounded,
					sand. 20% fine-med, sub-rounded
					to well rounded, gravel. v. moist,
					poorly sorted; loose, med brown
	22.0	24.0	1.0	WOR .75/1	50% silt; 30% fine-med, sub-
					rounded, sand; 20% fine-med,
					sub-rounded, gravel; v. moist.
					poorly sorted; loose; med brown
4/11-, 88	24.0	26.0	.8	1/1/1/2	40-50% fine-med, sub-rounded,
					sand; 20-30% silt. 10-20%
					fine-med; well rounded; gravel;
					Poorly sorted; saturated; med brown;
					loose
	26.0	28.0	1.8	WOR 2.0'	60-70% silt; 20% v. fine-fine, sand;
					15% fine-med, sub-rounded, gravel;
					saturated; Poorly sorted. med brown.
					loose; roots
	28.0	30.0	1.8	WOR 1.2'/1/1	70-80% silt; 10-15% v. fine, sand;
					5-10% fine, sub-rounded, gravel;
					loose, med brown; saturated; poorly
					sorted

GERAGHTY & MILLER, INC.
Ground-Water Consultants

4/12/88

BORLOG-0037(CONT.)

SAMPLE/CORE LOG (Cont.d)

Boring/Well PPb-10

Prepared By J.B. Naser

	Sample/Core Depth (feet below land surface) From	To	Core Recovery (feet)	Time/Hydraulic Pressure or Blows per 6 inches	Sample/Core Description
	30.0	32.0	1.3	1 blow 1.7'/2	70-80% silt; 10-15% v. fine sand; 10% fine, sub-rounded, gravel; loose; med brown; poorly sorted, roots
	32.0	34.0	1.2	1/5/7/6	40-50% fine-med, sub-rounded, sand; 20% silt; 20% fine-med, sub-rounded, gravel; 10-15% clay; mod dense; saturated; med brown; poorly sorted
	34.0	36.0	1.6	2/4/5/5	(top .2') 40-50% fine-med, sub-rounded, sand; 20% silt; 20% fine-med, sub-rounded, gravel; 10-15% clay. (bottom 1.4) 50-60% clay; 30-40% silt; 10% v. fine, sand; mod dense, moist; well sorted; gray/brown; roots, dark gray (specs) throughout
	36.0	38.0	1.5	5/5/7/7	60-70% clay; 25-35% silt; mod dense; well sorted, moist; graybrown/olive brown (lower .8) roots
1.5' in Auger	38.0	40.0	2.0	5/9/12/13	(top 1') 50-60% silt; 40-50 clay; gray/brown; moist (bottom 1') 70% clay; 30% silt; redish brown; damp; mottling; mod dense; roots
3' in Auger	40.0	42.0	1.4	3/6/10/10	80-85% clay; 15-20 silty, very fine, sand; redish brown; damp; mod dense; well sorted; heavy mottling
	42.0	44.0	1.85	full	Shelby Tube sample 60% clay; 40% silt; mottling; redish brown
	44.0	46.0	1.5	3/5/8/10	80-85% clay; 15-20% v. fine, silt; redish brown; damp, mottling throughout

GERAGHTY & MILLER, INC.
Ground-Water Consultants

4/12 - 4/13/88

BORLOG-0037 (CONT.)

SAMPLE/CORE LOG (Cont.d)

Boring/Well ppb-10

Prepared By J. B. Naser

Sample/Core Depth (feet below land surface) From	To	Core Recovery (feet)	Time/Hydraulic Pressure or Blows per 6 inches	Sample/Core Description
46.0	48.0	1.8	4/5/7/10	85-90% clay; 10-15% silt; mod dense; redish brown; damp; mottling throughout
48.0	50.0	1.4	4/6/8/9	(top .7) 60% silt; 40% clay (bottom .7) 70% clay; 30% silt; mod dense; damp; redish brown; mottling present
50.0	52.0	1.7	2/4/4/6	50-60% clay; 40-50% silt; mod dense; redish brown; moist; sl. mottling
52.0	54.0	1.8	3/3/4/5	50-60% silt; 40-50% clay; mod dense; redish brown; moist; mottling
54.0	56.0	1.5	2/4/5/5	50-60% silt; 40-50% clay; mod dense; redish brown; v. moist/saturated; sl mottling
56.0	58.0	.8	3/3/3/3	60% silt; 40% clay; loose; redish brown; saturated; well sorted
58.0	60.0	1.6	1/2/2/3	35-45 fine-med, sub-rounded, sand; 30-35% silt; 20% clay; mod dense; moist, med brown; well-sorted.
60.0	62.0	1.4	2/2/3/4	(top .7') 100% fine-med, sub-rounded sand; draw down? (bottom .7') 40-50% silt; 20% clay; 25-30% fine-med, sub-rounded, sand; moist, poorly sorted med brown; traces of charcoal
4/13/88 62.0	64.0	1.2	3/6/12/20	(top .7) 70-75% coarse, sub-rounded, sand; 10-15% fine, sub-rounded, gravel; 10-15% silt. (bottom .5) 60% gravel; 40-50% coarse, sand; 10-15% clay; traces of charcoal, a few large cobbles; moist; mod dense; poorly sorted, med brown

GERAGHTY & MILLER, INC.
Ground-Water Consultants

4/13/88

BORLOG-0037(CONT.)

SAMPLE/CORE LOG (Cont.d)

Boring/Well Ppb-10

Prepared By J.B. Naser

Sample/Core Depth (feet below land surface) From	To	Core Recovery (feet)	Time/Hydraulic Pressure or Blows per 6 inches	Sample/Core Description
64.0	66.0	1.4	32/29/25/28	60-65% fine-med, rounded gravel, 30% coarse,
				sub-rounded sand, 10-15% silt, dense, med brown
				v. moist, poorly sorted
66.0	68.0	1.4	37/30/28/25	60-65% fine-med, rounded gravel, 30% coarse,
				sub-rounded, sand, 10-15% silt, dense, med brown,
				saturated, poorly sorted, cobbles present

GERAGHTY & MILLER, INC.
Ground-Water Consultants

R0738H08-BORLOG-0046

SAMPLE/CORE LOG

Boring/Well PPB-11 Project/No. R0738H08 Page 1 of 2

Site Location Hannibal, OH Drilling Started 4/14/88 Drilling Completed 4/14/88

Total Depth Drilled 20 feet Hole Diameter 8.0 inches Type of Sample/Coring Device Split spoon

Length and Diameter of Coring Device 2" diameter x 2' length Sampling Interval every 1.0 feet

Land-Surface Elev. 658.63 feet ☒ Surveyed Estimated Datum MSL

Drilling Fluid Used None Drilling Method HSA

Drilling Contractor Pennsylvania Drilling Co. Driller Russ Waddell Helper Curt Waddell

Prepared By K. Wells Hammer Weight 140 lbs Hammer Drop 30 inches

Sample/Core Depth (feet below land surface) From	To	Core Recovery (feet)	Time/Hydraulic Pressure or Blows per 6 inches	Sample/Core Description
0	2	0	3/4/5/6	NO RECOVERY
2	4	1.7	2/8/8/10	SAND (60%) orange-brown, fine-grained, poorly sorted, rounded;
				silt (35%) orange-brown; gravel (~5%) few moderate-sized pieces - dry
4	6	0.6	5/6/4/5	CLAY (70%) orange-brown, cohesive, slight color mottling; fine sand
				(15%) orange-brown, rounded, poorly sorted; silt (15%) orange-brown-
				dry; tan arkosic sandstone fragment caught in shoe of spoon
6	8	1.5	3/1/2/1	6.0-6.7' SAND (80%) medium to coarse-grained, brown, rounded, poorly sorted; clay (10%) orange-brown, cohesive; gravel (10%) rounded few large pieces — dry with some wood fibers
				6.7-7.5' FILL (100%) black, rubbery, fine-grained texture — damp
8	10	1.0	6/9/7/5	SILT (70%) orange-brown, loosely packed; gravel (20%) medium
				grained, poorly sorted, subrounded; clay (10%) orange-brown,
				cohesive — dry, gravel more prevalent in 8.0-8.4' interval; large
				silicous pebble in 8.0-8.2' interval
10	12	0.8	1/2/2/3	SILT (60%) brown; clay (30%) brown, cohesive; gravel/pebbles
				(~10%) medium grained, subrounded, poorly sorted — damp
12	14	1.3	2/3/6/7	GRAVEL (60%) red-brown, medium-grained, poorly sorted,
				subrounded; clay (30%) cohesive; silt (10%) red-brown —
				damp with some sandstone fragments

GERAGHTY & MILLER, INC.
Ground-Water Consultants

BORLOG-0046 (CONT.)

SAMPLE/CORE LOG (Cont.d)

Boring/Well PPB-11

Prepared By K. Wells

Sample/Core Depth (feet below land surface) From	To	Core Recovery (feet)	Time/Hydraulic Pressure or Blows per 6 inches	Sample/Core Description
14	16	1.2	1/4/4/5	SAND (50%) red-brown, coarse-grained, rounded,
				poorly sorted; gravel (30%) medium-grained,
				subangular to subrounded, poorly sorted;
				silt (20%) red brown — damp with thin smut
				coal band at 15.0'
16	18	1.0	1/3/4/7	SAND (50%) red-brown, coarse-grained, rounded,
				poorly sorted; gravel (40%) medium-grained,
				subangular to subrounded, poorly sorted;
				silt (10%) red-brown — damp with thin smut
				coal band at 17.6'
18	20	1.1	3/6/21/12	SAND (70%) brown, coarse-grained, poorly
				sorted; gravel (20%) medium-grained, subangular,
				poorly sorted; silt (10%) brown — damp with
				gravel percentage decreasing with depth — some
				arkosic sandstone fragments

GERAGHTY & MILLER, INC.
Ground-Water Consultants

R0738H08-BORLOG-0047

SAMPLE/CORE LOG

Boring/Well PPB-12 Project/No. R0738H08 Page 1 of 2

Site Location Hannibal, OH Drilling Started 4/15/88 Drilling Completed 4/15/88

Total Depth Drilled 22 feet Hole Diameter 8.0 inches Type of Sample/Coring Device Split spoon

Length and Diameter of Coring Device 2" diameter by 2' length Sampling Interval every 1.0 feet

Land-Surface Elev. 652.43 feet ☒ Surveyed Estimated Datum MSL

Drilling Fluid Used None Drilling Method HSA

Drilling Contractor Pennsylvania Drilling Driller Russ Waddell Helper Curt Waddell

Prepared By K. Wells Hammer Weight 140 lbs Hammer Drop 30 inches

Sample/Core Depth (feet below land surface) From	To	Core Recovery (feet)	Time/Hydraulic Pressure or Blows per 6 inches	Sample/Core Description
0	2	1.8	10/7/7/8	SILT (50%) red-brown; clay (40%) red-brown, cohesive; gravel (10%) medium-grained, subangular, poorly sorted — damp with large sandstone fragments and a few rootlets
2	4	1.4	6/4/4/5	CLAY (60%) red-brown; silt (30%) red-brown; gravel (10%) medium-grained, subangular, poorly sorted — damp with some large pebbles
4	6	1.4	2/4/6/7	SILT (60%) red-brown; clay (40%) red-brown — damp with blue-gray clay in last 0.4' section, color mottling — a few sandstone fragments
6	8	1.4	3/3/2/3	SILT (50%) red-brown; clay (30%) red-brown; gravel (20%) fine to medium grained, subangular, poorly sorted — damp with some charcoal-like fragments
8	10	1.4	2/2/3/2	SILT (50%) brown grading to green-gray; clay (40%) cohesive; gravel (10%) medium-grained, subangular — damp with dark green rock/pebble fragments
10	12	0.6	1/2/4/5	SILT (50%) brown to green-gray; clay (40%) cohesive; gravel (10%) medium-grained, subangular — damp to moist with a few sandstone fragments

GERAGHTY & MILLER, INC.
Ground-Water Consultants

BORLOG-0047(CONT.)

SAMPLE/CORE LOG (Cont.d)

Boring/Well PPB-12

Prepared By K. Wells

Sample/Core Depth (feet below land surface) From	To	Core Recovery (feet)	Time/Hydraulic Pressure or Blows per 6 inches	Sample/Core Description
12	14	1.4	1/2/4/3	12-13.0' SILT (50%); clay (40%); gravel (10%)
				13.0-13.4' SAND (60%) orange-brown, rounded, poorly sorted,
				gravel (30%) medium-grained, subangular, poorly sorted; clay (10%)
				brown, cohesive — damp
14	16	1.1	1/2/3/4	SILT (50%) gray-green; clay (45%) cohesive, gray-green;
				gravel (5%) medium-grained, subangular, poorly sorted — damp
16	18	1.1	3/5/7/7	CLAY (70%) orange, cohesive; silt (20%) orange-brown;
				gravel (10%) small, fine-grained, poorly sorted, rounded — damp
				with some black banding (coal?); occasional large pebbles and
				sandstone fragments
18	20	1.2	1/6/4/5	SAND (70%) orange-brown, coarse-grained, rounded, poorly sorted;
				gravel (20%) medium-grained, poorly sorted, subrounded; clay (10%)
				orange-brown — damp with large arkosic sandstone fragments
20	22	1.1	5/7/6/5	SAND (70%) brown, coarse-grained, rounded, poorly sorted;
				gravel (30%) brown, medium-grained, subangular to subrounded;
				poorly sorted — damp with some large sandstone fragments
				and cobbles

GERAGHTY & MILLER, INC.
Ground-Water Consultants

R0738H08 - BORLOG-0048

SAMPLE/CORE LOG

Boring/Well PPB-13 Project/No. R0738H08 Page 1 of 2

Site Location Hannibal, OH Drilling Started 4/15/88 Drilling Completed 4/15/88

Total Depth Drilled 20 feet Hole Diameter 8.0 inches Type of Sample/Coring Device Split Spoon

Length and Diameter of Coring Device 2" diameter by 2' length Sampling Interval every 1.0 feet

Land-Surface Elev. 652.99 feet ☐ Surveyed Estimated Datum MSL

Drilling Fluid Used None Drilling Method HSA

Drilling Contractor Pennsylvania Drilling Co. Driller Russ Waddell Helper Curt Waddell

Prepared By K. Wells Hammer Weight 140 lbs Hammer Drop 30 inches

Sample/Core Depth (feet below land surface) From	To	Core Recovery (feet)	Time/Hydraulic Pressure or Blows per 6 inches	Sample/Core Description
0	2	1.1	7/9/10/10	0-0.4' SILT (100%) dark brown with rootlets and small pebbles
				0.4-1.1' FILL (80%) weathered brick pieces, slag; silt (20%) dark
				brown — dry
2	4	1.4	2/-/1/1	2-2.6' FILL (100%) weathered bright orange brick fragments
				2.6-3.4' FILL (100%) black, sludge-like — moist
4	6	2.0	-/-/-/1	FILL (100%) black, sludge-like with burnt orange colorations — wet
6	8	2.0	-/-/-/1	FILL (100%) black, sludge-like with burnt orange colorations — wet
8	10	2.0	-/-/-/1	FILL (100%) black, sludge-like with gray mottling and burnt orange
				colorations — wet
10	12	2.0	-/-/-/1	FILL (100%) black, sludge-like, wet — no color mottling
12	14	2.0	-/1/-/2	12-13.7' FILL (100%) black, sludge-like, wet
				13.7-14' SAND (40%) orange-brown, medium-grained, rounded, poorly
				sorted; silt (30%) orange-brown; gravel (10%) fine to medium
				grained, subrounded, poorly sorted — damp
14	16	0.5	5/10/16/14	CLAY (40%) tan, orange-brown; gravel (20%) medium-grained,
				subangular, poorly sorted; sand (20%) orange-brown, rounded,
				poorly sorted, coarse-grained — damp
16	18	1.0	5/7/7/10	SAND (80%) coarse-grained, orange-brown, rounded, poorly sorted;
				gravel (20%) fine to medium grained, subangular, poorly sorted —
				large sandstone fragments, dry to damp

GERAGHTY & MILLER, INC.
Ground-Water Consultants

BORLOG-0048 (CONT.)

SAMPLE/CORE LOG (Cont.d)

Boring/Well PPB-13

Prepared By K. Wells

Sample/Core Depth (feet below land surface) From	To	Core Recovery (feet)	Time/Hydraulic Pressure or Blows per 6 inches	Sample/Core Description
18	20	0.5	9/11/9/11	SAND (50%) orange-brown, medium to coarse-grained, poorly sorted, rounded; gravel (40%) medium-grained, angular, poorly sorted; sandstone fragments (10%) arkosic weathered fragments — dry

4/18/88

GERAGHTY & MILLER, INC.
Ground-Water Consultants

R0738H08-BORLOG-0038

SAMPLE/CORE LOG

Boring/Well ppb-14 Project/No. R0738H08 / ORMET Page 1 of ____

Site Location Hannibal, OHIO Drilling Started 3:11 PM 4/18/88 Drilling Completed 8:14 AM 4/19/88

Total Depth Drilled 28 (feet)

Hole Diameter 8 (inches) Type of Sample/Coring Device split spoon

Length and Diameter of Coring Device 2' x .2' Sampling Interval Cont feet

Drilling Fluid Used NONE Drilling Method HSA

Drilling Contractor Pennsylvania Drilling Co. Driller R. Waddell Helper Kurt W.

Prepared By J. B. Naser Hammer Weight 140 # Hammer Drop 30 inches

Sample/Core Depth (feet below land surface) From	To	Core Recovery (feet)	Time/Hydraulic Pressure or Blows per 6 inches	Sample/Core Description
0.0	2.0	1.1	4/5/5/7	35-45% silt; 30-40% clay;
				10-15% fine, well rounded, gravel;
				5% calcite & quartz cobbles;
				mod dense, med/redish brown;
				poorly sorted; dry; roots
2.0	4.0	.8	5/8/9/7	(top .6) 35-45% silt; 30-40% clay;
				10-15% fine, well rounded, gravel;
				mod dense, med/redish brown;
				poorly sorted, dry
				(bottom .2') shoe full of S.S. frags
				(70%) and fine, sandy, clay (30%)
4.0	6.0	No recovery	4/7/12/16	granite cobble wedged in spoon;
				mod dense
6.0	8.0	.5	8/7/8/6	S.S. wedged in spoon; small
				amount of clay & fine sand;
				mod dense; dry; olive green/brown

4/18/88

GERAGHTY & MILLER, INC.
Ground-Water Consultants

BOR106-0038 (CONT.)

SAMPLE/CORE LOG (Cont.d)

Boring/Well ppb-14

Page 2 of

Prepared By J. B. Naser

Sample/Core Depth (feet below land surface) From	To	Core Recovery (feet)	Time/Hydraulic Pressure or Blows per 6 inches	Sample/Core Description
8.0	10.0	.6	8/6/6/6	90% wx Sandstone; small amount of charcoal, 10% fine-med, rounded, Sand; dry; no sorting; med brown; mod dense
10.0	12.0	1.0	2/2/3/4	60% fine - coarse, sub-rounded, gravel & cobbles; 20% fine-med, sub-rounded, sand; 20% clay; mod dense; damp; poorly sorted; med brown; S.S fragments present throughout
12.0	14.0	1.4	WOR .25/3/3/2/3	80% med-coarse, sub-angular, sand; 10-15% med, sub-angular, gravel; 5-15% silt; loose; damp; med brown, poorly sorted; thin black bands near shoe
14.0	16.0	1.0	WOR .2' 2/3/3/4	(top .5') 80% med-coarse, sub-angular, sand, 10-15% med, sub-angular, gravel; 5-15% silt (bottom .5') 60-70% fine-med, sub-rounded, sub-angular, gravel; 15-20% clay; 10% fine, sand; 5% silt; mod dense, med brown; damp, poorly sorted

4/18/88

GERAGHTY & MILLER, INC.
Ground-Water Consultants

BORLOG-0038 (CONT.)

SAMPLE/CORE LOG (Cont.d)

Boring/Well PPb-14

Prepared By J. B. Naser

Sample/Core Depth (feet below land surface) From	To	Core Recovery (feet)	Time/Hydraulic Pressure or Blows per 6 inches	Sample/Core Description
16.0	18.0	.2	3/3/5/4	75-85%, sub-angular, fine-med,
				gravel; 15-25% fine-med
				sub-rounded, sand; trace silt; loose;
				mod dense; damp; poorly sorted;
				med brown
18.0	20.0	1.1	4/4/5/3	(top .7') 75-85%, sub-angular,
				fine-med, gravel; 15-25 fine-med,
				sub-rounded, sand; trace silt
				(lower .4') 75-85% fine-med,
				sub-rounded, sand; 10% silt; 10-15%
				fine-med, sub-rounded, sub-angular,
				gravel; mod dense; poorly sorted;
				med brown; w/ moist; small trace
				of black resinous material
20.0	22.0	1.6	WOR .25 1/2/7/8	65-75% fine-med, sub-rounded,
				sand; 20-30% fine-med, sub-rounded,
				gravel; saturated; poorly sorted;
				dk grayish/brown, mod dense;
				thin layer charcoal near mid
				of spon; S.S. wedged in shoe
22.0	24.0	1.2	10/12/11/9	45-55% fine-med, sub-rounded
				sub-angular, gravel; 30-40%
				fine-med, sub-rounded, sand; 10% silt

4/18/88 - 4/19/88

BORLOG-0038 (CONT.)

GERAGHTY & MILLER, INC.
Ground-Water Consultants

SAMPLE/CORE LOG (Cont.d)

Boring/Well ppb-14

Page 4 of 5

Prepared By J. B. Naser

	Sample/Core Depth (feet below land surface) From	To	Core Recovery (feet)	Time/Hydraulic Pressure or Blows per 6 inches	Sample/Core Description
	22.0	(cont.) 24.0	1.2	10/12/11/9	(top .2) black/ dk gray; saturated
					(bottom 1.0) med brown; v. moist,
					poorly sorted; mod dense
4/19/88	24.0	26.0	1.4	5/10/11/11	(top .7') 50-60% fine-med, sub-angular,
					gravel; s.s. fragments; 20-30%
					fine-med, sub-rounded, sand; 15% silt
					(.7'-1.0') 100% fine-med, sub-rounded,
					sand
					(1.0-1.4) 50-60% fine-med, sub-angular,
					gravel; 20-30% fine-med, sub-rounded,
					sand; 15% silt; s.s. frag; v. moist/
					saturated; mod dense, poorly sorted,
					med brown
	26.0	28.0	1.7	3/7/14/19	45-55% fine-med, sub-rounded,
					gravel; 40% fine-med, sub-rounded,
					sand, 10-15% silt; mod dense;
					poorly sorted; med brown;
					v. moist; a few cobbles present
	28.0	30.0	1.4	4/7/13/11	45-55% fine-med, sub-rounded,
					sub-angular, gravel; 45-55%
					fine, sub-rounded, sand; trace-5%
					silt; mod dense; v. moist on top,
					moist throughout; poorly sorted;

4/19/88

BORLOG-0038(CONT.)

GERAGHTY & MILLER, INC.
Ground-Water Consultants

SAMPLE/CORE LOG (Cont.d)

Boring/Well ppb-14

Prepared By J. B. Naser

Sample/Core Depth (feet below land surface) From	To	Core Recovery (feet)	Time/Hydraulic Pressure or Blows per 6 inches	Sample/Core Description
28.0	(cont) 30.0	1.4	4/7/13/11	wx sandstone; med brown; thin
				black bands present
30.0	32.0	1.7	6/7/8/9	40-45% fine-med, sub-rounded,
				gravel; 50-55% fine-med,
				sub-rounded, sand; 5-10% silt;
				v. moist; mod dense; med brown;
				poorly sorted; 2 thin black bands
				near center of sample

GERAGHTY & MILLER, INC.
Ground-Water Consultants

R0738H08-BORLOG-0039

SAMPLE/CORE LOG

Boring/Well ppb-15 Project/No. ORMET / R0738H08 Page 1 of 3

Site Location Hannibal, OHIO Drilling Started 2:02 pm 4/19/88 Drilling Completed 4:15 pm 4/19/88

Total Depth Drilled 22 feet Hole Diameter 8 inches Type of Sample/Coring Device split spoon

Length and Diameter of Coring Device 2' x 2' Sampling Interval cont feet

Land-Surface Elev. 658.54 feet ☒ Surveyed Estimated Datum MSL

Drilling Fluid Used Drilling Method HSA

Drilling Contractor Pennsylvania Drilling Co. Driller R. Waddell Helper Kurt W.

Prepared By J. B. Naser Hammer Weight 140 # Hammer Drop 30 inches

Sample/Core Depth (feet below land surface) From	To	Core Recovery (feet)	Time/Hydraulic Pressure or Blows per 6 inches	Sample/Core Description
0.0	2.0	1.1	1/1/2/2	(top .1) humus
				(bottom 1.6') 50-60% silt; 40-50% clay;
				10-15% fine-med, sub-rounded, gravel; dry;
				mod dense; poorly sorted; med yellow brown
2.0	4.0	1.1	2/1/2/6	50-60% silt; 40-50% clay; 10-15% fine-med
				sub-rounded, gravel; mod dense; yellow med/brown;
				roots present
4.0	6.0	1.2	3/4/4/3	60-70% silt; 30-35% clay; 5-10% fine-med,
				rounded, gravel; mod dense; poorly sorted;
				dry; med brown; roots present
6.0	8.0	1.15'	1/2/2/5	50-60% silt; 40-50% clay; 5-10% fine-med,
				rounded, gravel; mod dense; med-brown;
				roots present; sl. damp; poorly sorted.
8.0	10.0	1.6'	2/2/2/2	50-60% silt; 40-50% clay; 5-10% fine-med
				rounded, gravel; sl. damp; poorly sorted;
				med brown; mod dense
10.0	12.0	1.4	2/1/1/1	(top .4) 50-60% silt; 40-50% clay; 5-10%
				fine-med, rounded, gravel; med brown
				(bottom 1.0) 30% silt; 25-30% clay; 25-30% fine-
				med, sub-rounded sand; 15-20% fine-med sub-rounded.

gravel; moist; poorly sorted; dark brown; mod dense

GERAGHTY & MILLER, INC.
Ground-Water Consultants

4/19/88
BORLOG-0039 (CONT.)

SAMPLE/CORE LOG (Cont.d)

Boring/Well ppb-15

Prepared By J. B. Naser

Sample/Core Depth (feet below land surface) From	To	Core Recovery (feet)	Time/Hydraulic Pressure or Blows per 6 inches	Sample/Core Description
12.0	14.0	1.2	1/4/5/7	(top .9') 30% silt; 25-30% clay;
				25-30% fine-med, sub-rounded, sand;
				15-20% fine-med, sub-rounded, gravel;
				med brown; mod dense, damp
				(bottom .3') 30-35% fine-med,
				sub-rounded, sand; 30-35% silt;
				15-20% fine-med, sub-rounded
				gravel; 10-15% clay; greenish gray;
				mod dense; poorly sorted, damp,
				cobbles present; 1/4' band of black
				material present
14.0	16.0	1.3	15/18/14/15	(top .2) 30-35% fine-med,
				sub-rounded, sand; 30-35% silt;
				15-20% fine-med, sub-rounded,
				gravel; 10-15% clay
				(bottom .2) granulated slag;
				sl. damp; mod dense; gray/white
16.0	18.0	—	14/26/17/20	No recovery; rock wedged in
				spoon; spoon muddy on
				outside
18.0	20.0	1.5	5/6/9/9	(top .4') 50-60% fine-med,
				sub-rounded, gravel; 25-35% silt
				10% med, sub-rounded, sand, roots;
				dk gray; v. moist

GERAGHTY & MILLER, INC.
Ground-Water Consultants

4/19/88

BORL06-0039 (CONT.)

SAMPLE/CORE LOG (Cont.d)

Boring/Well ppb-15

Prepared By J. B. Naser

Sample/Core Depth (feet below land surface) From	To	Core Recovery (feet)	Time/Hydraulic Pressure or Blows per 6 inches	Sample/Core Description
18.0	20.0	1.5	5/6/9/9	(bottom 1.1)
				100% fine-med, sub-rounded, sand;
				damp; well sorted; mod dense
				(loose); med brown; bands of
				coarse sand
20.0	22.0	.8	3/6/7/8	80% fine-med, sub-rounded,
				sand; 20% fine-med, sub-rounded,
				gravel; mod-dense; trace silt;
				med brown; well sorted; s.s. frags
22.0	24.0	1.1	3/5/8/11	40-50% fine-med, sand; 50-60%
				fine-med, sub-rounded, gravel;
				mod dense; s.s. frags; sl damp;
				poorly sorted; trace silt

4/20/88

GERAGHTY & MILLER, INC.
Ground-Water Consultants

R0738H08-BORLOG-0040

SAMPLE/CORE LOG

Boring/Well PPb-16 Project/No. ORMET / R0738H08 Page 1 of 3

Site Location Hannibal, OHIO Drilling Started 7:47 4/20/88 Drilling Completed 9:24 AM 4/20/88

Total Depth Drilled 18 (feet)

Hole Diameter 8 (inches) Type of Sample/Coring Device Split spoon

Length and Diameter of Coring Device 2' x .2' Sampling Interval Cont. feet

Drilling Fluid Used _____ Drilling Method HSA

Drilling Contractor Pennsylvania Drilling Co. Driller R. Waddell Helper Kurt W.

Prepared By J. B. Naser Hammer Weight 140 # Hammer Drop 30 inches

Sample/Core Depth (feet below land surface) From	To	Core Recovery (feet)	Time/Hydraulic Pressure or Blows per 6 inches	Sample/Core Description
0.0	2.0	1.1	2/5/4/4	(top .2') humus
				(bottom .9') 50-60% silt; 30-40%
				clay; 10-15% med. rounded, gravel.
				cobbles present; sl damp; yellow/brown;
				mod dense
2.0	4.0	.5	2/3/3/3	55-60% silt; 30-35% clay;
				5-10% rounded fin-med gravel;
				mod dense; sl. damp; yellow/brown;
				poorly sorted
4.0	6.0	1.5	3/6/6/9	(top .2) same as above
				(.2-1.0') slag; 50-60% silt;
				30% clay; 15-20% sub-rounded,
				fine-med. gravel
				(1.0-1.5') 55-60% silt; 30-35% clay
				5-10%, rounded, gravel; mod dense,
				sl. damp, poorly sorted; med brown

4/20/88

GERAGHTY & MILLER, INC.
Ground-Water Consultants

BORLOG-0040 (CONT.)

SAMPLE/CORE LOG (Cont.d)

Boring/Well ppb-16

Prepared By J. B. Naser

Sample/Core Depth (feet below land surface) From	To	Core Recovery (feet)	Time/Hydraulic Pressure or Blows per 6 inches	Sample/Core Description
6.0	8.0	1.7	8/8/9/5	25-35% silt; 25-35% fine-med,
				sub-rounded, sand; 15-20% clay;
				10-15% fine-med, sub-rounded,
				gravel; s.s and granite cobbles;
				mod dense, med brown; dry [fill]
8.0	10.0	1.6	6/8/7/5	50% fine-med, sub-rounded, sand;
				15-20% clay; 5% silt; 20-30%
				fine-med, sub-angular, gravel (fill)
				; mod dense; sl. damp; poorly
				sorted; med brown; several
				thin bands of black material;
				quartz, green slag
10.0	12.0	.8	2/4/9/9	60-70% fine-med, sub-rounded
				sand; 10% clay; 25-35%
				fine-med, sub-rounded, gravel;
				trace silt; mod dense; poorly
				sorted; med brown; sl damp;
				s.s in shoe
12.0	14.0	1.2	2/4/7/8	60-70% fine-med, sub-rounded, sand.
				10% clay; 25-35% fine-med,
				sub-angular gravel; trace silt; sl damp
				s.s. frags, mod dense, poorly sorted

4/20/88

GERAGHTY & MILLER, INC.
Ground-Water Consultants

BORLOG-0040 (CONT.)

SAMPLE/CORE LOG (Cont.d)

Boring/Well PPb-16

Prepared By J.B. Naser

Sample/Core Depth (feet below land surface) From	To	Core Recovery (feet)	Time/Hydraulic Pressure or Blows per 6 inches	Sample/Core Description
14.0	16.6	1.1	2/3/8/10	(top .2') 75-85% sand; 10%
				silt; 5% fine, sub-rounded gravel;
				black spotting throughout
				(bottom .9') 50-60% fine-med,
				sub-rounded gravel; 35-40% fine-
				med, sub-rounded sand; 5-10%
				silt; trace clay; s.s. frags; damp;
				mod dense; med brown; poorly sorted;
				thin black bands present
16.0	18.6	1.2	5/16/16/16	50-60% fine-med, sub-rounded,
				sand; 40-50% fine-med, sub-angular,
				gravel; limestone fragments; med brown;
				mod dense; poorly sorted, damp
18.0	20.0	1.4	5/6/8/7	85% fine-med, sub-rounded, sand;
				15% med, rounded, gravel; loose;
				s.s. frags present; sl damp; med
				brown; poorly sorted.

GERAGHTY & MILLER, INC.
Ground-Water Consultants

R0738H08 - BORLOG - 0049

SAMPLE/CORE LOG

Boring/Well PPB-17 Project/No. R0738H08 Page 1 of 2

Site Location Hannibal, OH Drilling Started 4/20/88 Drilling Completed 4/20/88

Total Depth Drilled 20 feet Hole Diameter 8.0 inches Type of Sample/Coring Device Split Spoon

Length and Diameter of Coring Device 2" diameter by 2' length Sampling Interval every 1.0 feet

Land-Surface Elev. 658.78 feet ☒ Surveyed Estimated Datum MSL

Drilling Fluid Used None Drilling Method HSA

Drilling Contractor Pennsylvania Drilling Co Driller Russ Waddell Helper Curt Waddell

Prepared By K. Wells Hammer Weight 140 lbs Hammer Drop 30 inches

Sample/Core Depth (feet below land surface) From	To	Core Recovery (feet)	Time/Hydraulic Pressure or Blows per 6 inches	Sample/Core Description
0	2	1.3	2/1/2/1	SILT (60-70%) brown with some gray striations; clay (30-40%) brown, loosely compacted — dry with rootlets and grass in upper 0.5', occasional trace of gravel
2	4	1.5	7/8/7/4	CLAY (60%) dark brown, crumbly; silt (30%) dark brown; gravel (10%) medium-grained, subrounded, poorly sorted — dry with a few brick fragments
4	6	0.5	2/2/1/3	CLAY (40%) dark brown to orange brown, crumbly; silt (40%) orange-brown; gravel (20%) medium-grained, rounded, poorly sorted — damp
6	8	0.6	16/5/3/4	GRAVEL (65%) orange-brown, rounded, poorly sorted, fine to medium grained; clay (20%) brown; silt (15%) orange-brown — damp with some arkosic sandstone fragments in shoe of spoon
8	10	0.8	6/4/4/4	GRAVEL (60%) fine-grained, rounded, brown, poorly sorted; clay (20-25%) orange-brown; silt (10-15%) orange-brown to brown — damp with some limestone fragments
10	12	1.5	2/2/4/2	SAND (50%) orange-brown, coarse-grained, rounded, poorly sorted; gravel (25%) fine to medium-grained, rounded, poorly sorted; clay (20%) orange-brown; silt (trace to 5%) orange-brown — damp

GERAGHTY & MILLER, INC.
Ground-Water Consultants

BORLOG-0049 (CONT.)

SAMPLE/CORE LOG (Cont.d)

Boring/Well PPB-17

Prepared By K. Wells

Sample/Core Depth (feet below land surface) From	To	Core Recovery (feet)	Time/Hydraulic Pressure or Blows per 6 inches	Sample/Core Description
12	14	1.1	2/2/3/4	SAND (60%) varied browns, coarse-grained, rounded, poorly sorted; gravel (30%) medium-grained, poorly sorted, rounded; clay (10%) brown; silt (trace) orange-brown — damp with some arkosic sandstone fragments and isolated bands of smut coal
14	16	1.4	4/5/8/7	SAND (50%) coarse-grained, brown, rounded, poorly sorted; gravel (30%) medium-grained, poorly sorted, rounded; silt (20%) brown — moist with some quartzite pebbles
16	18	1.6	3/4/8/7	SAND (50%) coarse-grained, brown, rounded, poorly sorted; gravel (30%) medium-grained, poorly sorted, rounded; silt (20%) brown — moist with sandstone fragments and smut coal
18	20	1.3	3/5/12/12	SAND (70%) brown, coarse-grained, rounded, poorly sorted; gravel (15%) medium-grained, rounded, poorly sorted; silt (15%) brown — damp to moist with sandstone, chert and smut coal fragments

CERAGHTY & MILLER, INC.
Ground-Water Consultants

R0738H08-BORLOG-0050

SAMPLE/CORE LOG

Boring/Well PPB-18 Project/No. R0738H08 Page 1 of 2

Site Location Hannibal, OH Drilling Started 4/20/88 Drilling Completed 4/20/88

Total Depth Drilled 20 feet Hole Diameter 8.0 inches Type of Sample/Coring Device Split spoon

Length and Diameter of Coring Device 2" diameter by 2' length Sampling Interval every 1.0 feet

Land-Surface Elev. 662.76 feet ☒ Surveyed Estimated Datum MSL

Drilling Fluid Used None Drilling Method HSA

Drilling Contractor Pennsylvania Drilling Co. Driller Russ Waddell Helper Curt Waddell

Prepared By K. Wells Hammer Weight 140 lbs Hammer Drop 30 inches

Sample/Core Depth (feet below land surface) From	To	Core Recovery (feet)	Time/Hydraulic Pressure or Blows per 6 inches	Sample/Core Description
0	2	1.7	1/1/-/2	0-1.2' FILL (100%) sludge-like, medium to coarse-grained, dk gray to black
				1.2-1.7' CLAY (50%) dark brown; sand (30%) medium-grained, rounded, poorly sorted; gravel (20%) medium grained, tan to brown, poorly sorted, rounded — dry
2	4	1.7	4/5/6/6	CLAY (60%) dark brown, sand (20%) medium-grained, rounded, poorly sorted; gravel (20%) rounded, medium-grained, a few large pebbles, poorly sorted, brown — dry
4	6	1.5	3/4/5/5	0-1.2' CLAY (60%) dark brown; sand (20%) medium-grained, rounded, poorly sorted; gravel (15%) rounded, medium-grained, poorly sorted; silt (5%) brown — damp
				1.2-1.5' CLAY (60%) black-brown; silt (25%) black-brown; gravel (15%) medium to coarse grained, rounded, poorly sorted — damp to dry, distinct color change at 5.2' depth
6	8	1.4	5/9/9/8	SAND (40%) orange-brown, medium-grained, rounded, poorly sorted; gravel (35%) brown, rounded, medium-grained, poorly sorted; clay (25%) brown, orange; silt (5%) orange-brown — dry with large artesic sandstone fragments
8	10	0.6	2/5/5/7	SAND (40%) orange-brown, medium-grained, rounded, poorly sorted; gravel (35%) brown, rounded, medium-grained, poorly sorted; clay (25%) orange-brown; silt (5%) orange-brown — dry with artesic sandstone fragments

GERAGHTY & MILLER, INC.
Ground-Water Consultants

BORLOG-0050 (CONT.)

SAMPLE/CORE LOG (Cont.d)

Boring/Well PPB-18

Prepared By K. Wells

Sample/Core Depth (feet below land surface) From	To	Core Recovery (feet)	Time/Hydraulic Pressure or Blows per 6 inches	Sample/Core Description
10	12	1.2	3/4/7/6	SAND (35%) medium to coarse-grained, brown, rounded, poorly sorted; clay (35%) brown, loosely compacted; gravel (25%) brown, medium-grained, rounded, poorly sorted; silt (5%) brown — dry with large sandstone fragments
12	14	1.0	4/4/5/4	SAND (40%) medium to coarse-grained, brown, rounded; clay (30%) brown, loosely compacted; gravel (25%) brown, poorly sorted, medium-grained, rounded; silt (5%) brown — dry with large sandstone fragments
14	16	1.2	3/4/4/5	SAND (60%) dark brown, rounded, coarse-grained, poorly sorted; gravel (30%) medium-grained, rounded, poorly sorted; silt (5%) orange-brown; clay (trace) brown — moist, sand percentage increasing with depth
16	18	0.9	4/7/8/9	SAND (70%) brown, coarse-grained, rounded, poorly sorted; gravel (20%) medium-grained, rounded, poorly sorted; silt (10%) brown — moist to wet with some sandstone fragments and smut coal
18	20	1.3	3/6/6/7	SAND (70%) brown, coarse-grained, rounded, poorly sorted; gravel (20%) medium-grained, rounded, poorly sorted; silt (10%) brown — moist to wet

GERAGHTY & MILLER, INC.
Ground-Water Consultants

R0738H08 - BORLOG - 0051

SAMPLE/CORE LOG

Boring/Well PPB-19 Project/No. R0738H08 Page 1 of 2

Site Location Hannibal, OH Drilling Started 4/21/88 Drilling Completed 4/21/88

Total Depth Drilled 20 feet Hole Diameter 8.0 inches Type of Sample/Coring Device Split spoon

Length and Diameter of Coring Device 2" diameter by 2' length Sampling Interval every 1.0 feet

Land-Surface Elev. 658.20 feet ☒ Surveyed Estimated Datum MSL

Drilling Fluid Used None Drilling Method HSA

Drilling Contractor Pennsylvania Drilling Co. Driller Russ Waddell Helper Curt Waddell

Prepared By K. Wells Hammer Weight 140 lbs Hammer Drop 30 inches

Sample/Core Depth (feet below land surface) From	To	Core Recovery (feet)	Time/Hydraulic Pressure or Blows per 6 inches	Sample/Core Description
0	2	0.8	1/2/2/5	CLAY (20%) orange-brown; silt (40-50%) orange-brown; gravel (10-15%) fine to medium grained, poorly sorted, rounded — dry to damp with mottles in top 20 inches
2	4	1.9	2/4/13/12	SAND (30%) fine to coarse-grained, orange-brown, rounded, poorly sorted; clay (30%) brown, loosely compacted; silt (10%) brown; gravel (30%) subrounded, medium grained, poorly sorted — fairly dry with sandstone fragments
4	6	1.8	7/7/10/10	SILT (50%) dark orange-brown; clay (30%) loosely compacted; gravel (20%) medium grained, subrounded, poorly sorted, brown; — dry with sandstone fragments, mottles and small pieces of slag
6	8	1.5	7/4/6/7	CLAY (60%) orange, loosely compacted; silt (40%) orange — dry and crumbly
8	10	1.1	6/6/7/8	SAND (50%) fine-grained, orange, rounded, poorly sorted; silt (40-45%) orange-brown; clay (5%) orange-brown — relatively dry and crumbly
10	12	1.5	5/5/5/6	SAND (50%) fine-grained, orange, rounded, poorly sorted; silt (40-45%) orange-brown; clay (5%) orange-brown — damp
12	14	1.0	9/6/5/6	SAND (60%) fine-grained, orange-brown, rounded; silt (25%) orange-brown; gravel (10%) medium-grained, subrounded, poorly sorted; clay (5% to trace) orange-brown — moist to damp with sandstone fragments

GERAGHTY & MILLER, INC.
Ground-Water Consultants

BORLOG-0051 (CONT.)

SAMPLE/CORE LOG (Cont.d)

Boring/Well PPB-19

Prepared By K. Wells

Sample/Core Depth (feet below land surface) From	To	Core Recovery (feet)	Time/Hydraulic Pressure or Blows per 6 inches	Sample/Core Description
14	16	1.0	2/1/1/2	SAND (60%) brown, coarse-grained, rounded, poorly sorted; gravel (30%) medium-grained, rounded, poorly sorted; silt (10%) dark brown — moist with rock fragments
16	18	0.7	2/2/3/4	SAND (70%) very coarse-grained, varied browns, rounded, poorly sorted; gravel (20%) medium grained, rounded, poorly sorted; silt (10%) dark brown — wet with some larger rock fragments
18	20	1.2	3/5/6/7	SAND (70%) very coarse grained, varied browns, rounded, poorly sorted; gravel (20%) medium grained, rounded, poorly sorted; silt (10%) dark brown — wet with some larger rock fragments

GERAGHTY & MILLER, INC.
Ground-Water Consultants

R0738H08-BORLOG-0052

SAMPLE/CORE LOG

Boring/Well PPB-20 Project/No. R0738H08 Page 1 of 2

Site Location Hannibal, OH Drilling Started 4/21/88 Drilling Completed 4/21/88

Total Depth Drilled 20 feet Hole Diameter 8.0 inches Type of Sample/Coring Device Split spoon

Length and Diameter of Coring Device 2.0 inch diameter by 2.0 ft length Sampling Interval every 1.0 feet

Land-Surface Elev. 657.07 feet ☒ Surveyed Estimated Datum MSL

Drilling Fluid Used None Drilling Method Hollow Stem Auger

Drilling Contractor Pennsylvania Drilling Co. Driller Russ Waddell Helper Curt Waddell

Prepared By K. Wells Hammer Weight 140 lbs. Hammer Drop 30 inches

Sample/Core Depth (feet below land surface) From	To	Core Recovery (feet)	Time/Hydraulic Pressure or Blows per 6 inches	Sample/Core Description
0	2	0.9	2/6/11/11	CLAY (55%) dark brown, loosely compacted; silt (30%) dark brown; gravel (15%) medium grained, rounded, poorly sorted — relatively dry with rootlets and sandstone fragments
2	4	1.4	6/9/7/5	SAND (35%) medium brown, fine to medium grained, rounded, poorly sorted; clay (35%) medium dark brown; gravel (20%) medium-grained, rounded, poorly sorted; silt (10%) orange-brown — relatively dry with a few large pebbles
4	6	0	4/7/8/6	NO RECOVERY; rock in shoe of spoon
6	8	1.3	3/4/3/4	CLAY (60%) dark gray to brown; sand (25%) very fine-grained, gray to brown, rounded, poorly sorted; gravel (15%) medium-grained, rounded, no sorting — relatively dry
8	10	1.4	3/3/4/5	SILT (80%) orange-brown; clay (20%) orange — relatively dry
10	12	1.8	3/4/4/5	SILT (80%) orange-brown; clay (20%) orange — relatively dry
12	14	1.6	2/3/4/5	SILT or VERY FINE GRAINED SAND (90%) orange-brown; clay (10%) orange-brown — damp
14	16	1.4	1/3/4/7	14-15.0' SILT (90%) orange-brown; clay (10%) orange-brown 15.0-15.4' SAND (60%) orange-brown, fine-grained, rounded, poorly sorted; gravel (25%) rounded, medium-grained, poorly sorted; silt (15%) orange-brown — moist
16	18	0.8	3/2/2/5	SAND (50%) coarse-grained, brown, rounded, poorly sorted; gravel (35%) medium-grained, rounded, poorly sorted; silt (15%)

GERAGHTY & MILLER, INC.
Ground-Water Consultants

BORLOG-0052(CONT.)

SAMPLE/CORE LOG (Cont.d)

Boring/Well 7PB-20

Prepared By R. Wells

Sample/Core Depth (feet below land surface) From	To	Core Recovery (feet)	Time/Hydraulic Pressure or Blows per 6 inches	Sample/Core Description
				dark brown — moist with coal smut
18	20	0.8	3/4/4/7	SAND (40%) orange-brown, coarse-grained, rounded, poorly sorted; gravel (30%) medium-grained, rounded, poorly sorted; silt (10%) orange-brown — moist

APPENDIX M-2

CONSTRUCTION LOGS FOR DISPOSAL POND PERIMETER PIEZOMETERS

ORMET CORPORATION
HANNIBAL, OHIO

R0738H08-WELLOG-0007

GERAGHTY & MILLER, INC.
Ground-Water Consultants

WELL CONSTRUCTION LOG

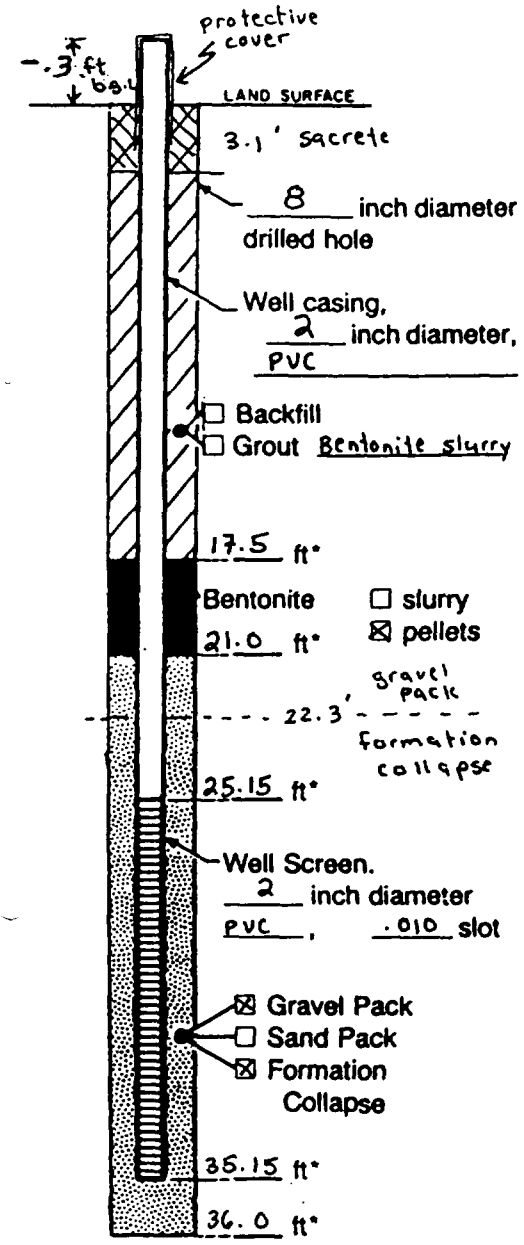

Measuring Point is Top of Well Casing Unless Otherwise Noted.

*Depth Below Land Surface

Project ORMET / R0738H08 Well PPb-01

Town/City Hannibal

County Monroe State OHIO

Permit No. _____

Land-Surface Elevation and Datum 663.54 feet MSL ☒ surveyed ☐ estimated

Installation Dates(s) 3/11/88 - 3/14/88

Drilling Method HSA

Drilling Contractor Pa. Drilling Co.

Drilling Fluid clean water used to flush sand from augers before setting well assembly

Development Techniques(s) and Date(s)
GUZZLER 6-2-88

Fluid Loss During Drilling 150 - 200 gallons

Water Removed During Development 30 gallons

Static Depth to Water 20.29 (6-20-88) feet below M.P.

Pumping Depth to Water _____ feet below M.P.

Pumping Duration _____ hours

Yield _____ gpm Date _____

Specific Capacity _____ gpm/ft

Well Purpose piezometer (perched zone)

Remarks well was set on 3/11/88; due to excessive amount of slurry used, which spread out in formation, it was necessary to allow the bentonite slurry to set up over the weekend; during which time the augers were capped w/ the hydrolic lift, well completed 3/14/88

Prepared by J. B. Naser

R0738H08-WELL06-0008

GERAGHTY & MILLER, INC.
Ground-Water Consultants

WELL CONSTRUCTION LOG

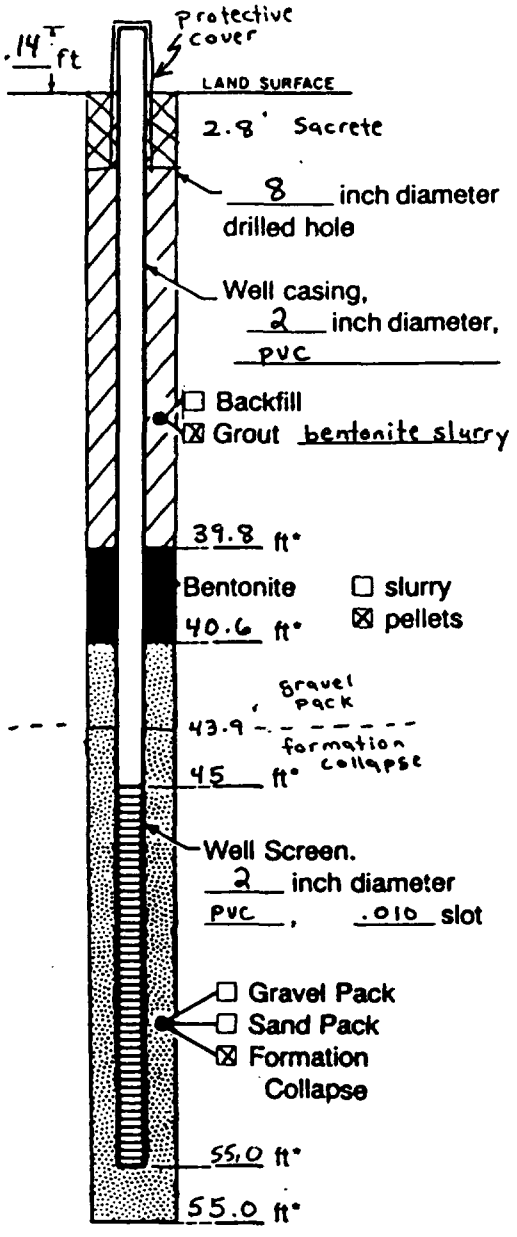

Measuring Point is Top of Well Casing Unless Otherwise Noted.

*Depth Below Land Surface

Project ORMET / R0738 H08 Well PPb-02d

Town/City Hannibal

County Monroe State OHIO

Permit No. _____

Land-Surface Elevation and Datum 662.75 feet MSL ☒ surveyed ☐ estimated

Installation Dates(s) 3/14/88 - 3/15/88

Drilling Method H.S.A.

Drilling Contractor Pa. Drilling Co.

Drilling Fluid clean water used to flush sand from augers before setting well assembly

Development Techniques(s) and Date(s)
BAILED 6-1/6-2-88

Fluid Loss During Drilling approx 50 gallons

Water Removed During Development 30 gallons

Static Depth to Water 45.52 (6-20-88) feet below M.P.

Pumping Depth to Water _____ feet below M.P.

Pumping Duration _____ hours

Yield _____ gpm Date _____

Specific Capacity _____ gpm/ft

Well Purpose piezometer (water table)

Remarks _____

Prepared by J. B. Naser

GERAGHTY & MILLER, INC.
Ground-Water Consultants

R0738H08-WELL06-0009

WELL CONSTRUCTION LOG

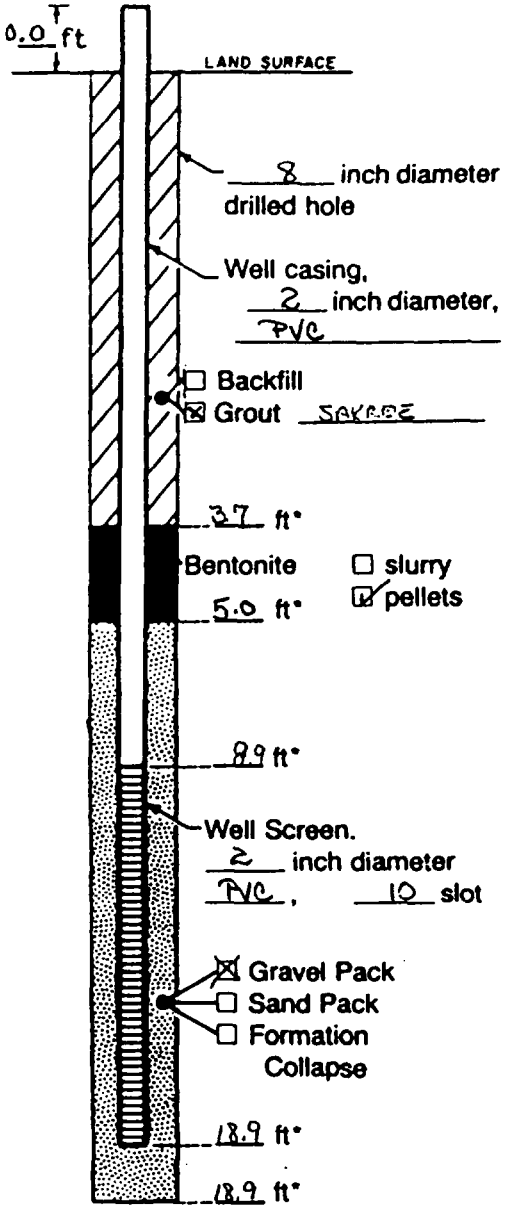

Measuring Point is Top of Well Casing Unless Otherwise Noted.

*Depth Below Land Surface

Project R0738H08 Well PPB-02S
Town/City Hannibal
County Monroe State Ohio
Permit No.
Land-Surface Elevation and Datum 663.14 feet MSL ☒ surveyed ☐ estimated
Installation Dates(s) 3/16/88
Drilling Method HSA
Drilling Contractor Pennsylvania Drilling Co
Drilling Fluid None — used fresh water to flush out flowing sand problem
Development Techniques(s) and Date(s)
BAILED 6-1-88 LOW YIELD

Fluid Loss During Drilling ~150 gal gallons
Water Removed During Development 2.5 gallons
Static Depth to Water 17.41 (6-20-88) feet below M.P.
Pumping Depth to Water feet below M.P.
Pumping Duration hours
Yield gpm Date
Specific Capacity gpm/ft
Well Purpose Perched zone piezometer

Remarks Attempted to set well assembly @ 9:30; PVC caving up with augers; removed assembly, flushed out borehole w/ fresh water — re-set well; added sandpack slowly until top of sand was @ 5.0' below land surface — added bentonite pellets by hand (~1.3' of pellets) until top of pellets was @ 3.7' below land surface — mixed sakrete and scooped into borehole; set protective casing over PVC and added more sakrete until sakrete was level with ground surface

Prepared by R. Wells

R0738H08 - WELL06 - 0010

GERAGHTY & MILLER, INC.
Ground-Water Consultants

WELL CONSTRUCTION LOG

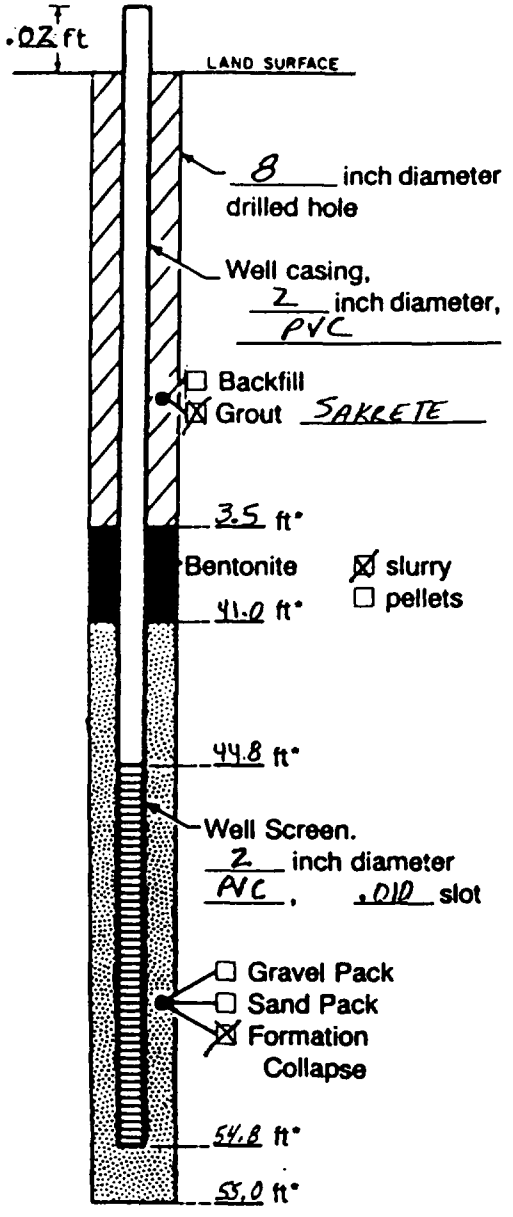

Measuring Point is Top of Well Casing Unless Otherwise Noted.

*Depth Below Land Surface

Project ORMET/R0738H08 Well PPB-04
Town/City HANNIBAL
County MONROE State OHIO
Permit No. _____
Land-Surface Elevation and Datum 661.55 feet ☒ surveyed ☐ estimated
Installation Dates(s) 3/21/88 - 3/22/88
Drilling Method HSA
Drilling Contractor PA. DRILLING
Drilling Fluid CLEAN WATER USED TO LOOSEN SAND DURING INSTALLATION OF WELL ASSEMBLY
Development Techniques(s) and Date(s)
BAILED 6/6/88

Fluid Loss During Drilling ± 100 GALLONS gallons
Water Removed During Development ~30 gallons
Static Depth to Water 48.28 (6-20-88) feet below M.P.
Pumping Depth to Water _____ feet below M.P.
Pumping Duration _____ hours
Yield _____ gpm Date _____
Specific Capacity _____ gpm/ft
Well Purpose WATER TABLE PIEZOMETER

Remarks

Prepared by R.L. FARGO

GERAGHTY & MILLER, INC.
Ground-Water Consultants

R0738H08-WELLOG-0011

WELL CONSTRUCTION LOG

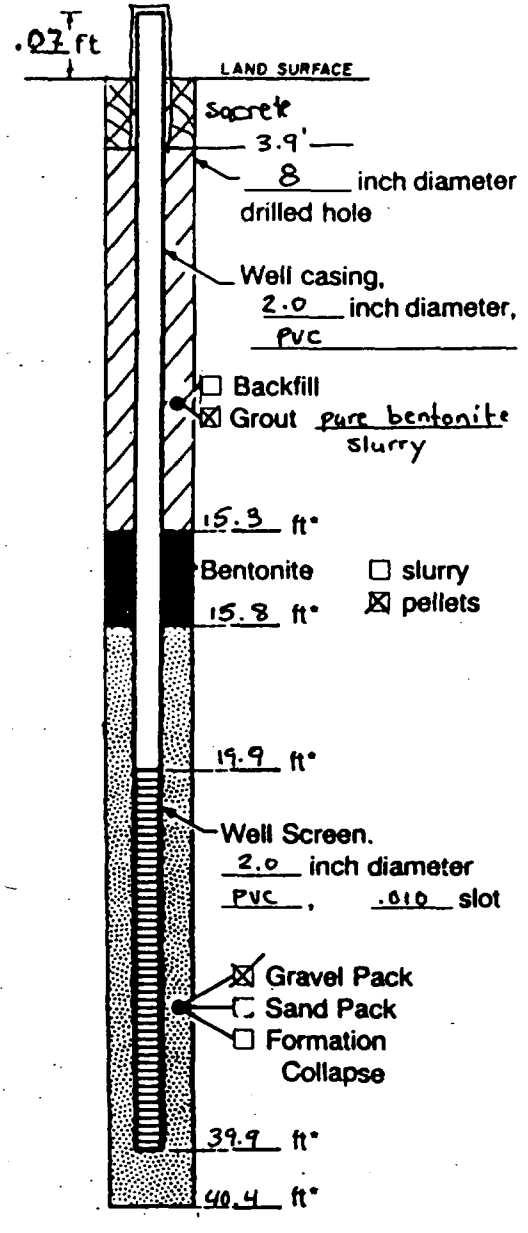

Measuring Point is Top of Well Casing Unless Otherwise Noted.

*Depth Below Land Surface

Project ORMET / R0738H08 Well PPb-05

Town/City Hannibal

County Monroe State OHIO

Permit No.

Land-Surface Elevation and Datum 661.55 feet MSL ☒ surveyed ☐ estimated

Installation Dates(s) 3/23 - 3/24/88

Drilling Method HSA

Drilling Contractor Pennsylvania Drilling Co.

Drilling Fluid approved H_2O source

Development Techniques(s) and Date(s)

BAILED 6/3/88

Fluid Loss During Drilling ~39 gallons

Water Removed During Development ~30 gallons

Static Depth to Water 16.64 (6-20-88) feet below M.P.

Pumping Depth to Water feet below M.P.

Pumping Duration hours

Yield gpm Date

Specific Capacity gpm/ft

Well Purpose piezometer (perched zone)

Remarks Drilled PPb-05 down to 64.0'; bentonite slurry up to 42.5', added 2.1' of bentonite pellets on top of slurry; sandpacked from 40.4 to 39.9; formation cave to 39.4; sandpacked around well casing to 15.8', installed pellets around well casing to 15.3 (.5'); slurried up to 3.9' b.g.l., added pellets on top then capped hole w/ Sacrete (covered PVC w/ protective cover w/ lock)

Prepared by J.B. Naser

GERAGHTY & MILLER, INC.
Ground-Water Consultants

R0738H08-WELLOG-0012

WELL CONSTRUCTION LOG

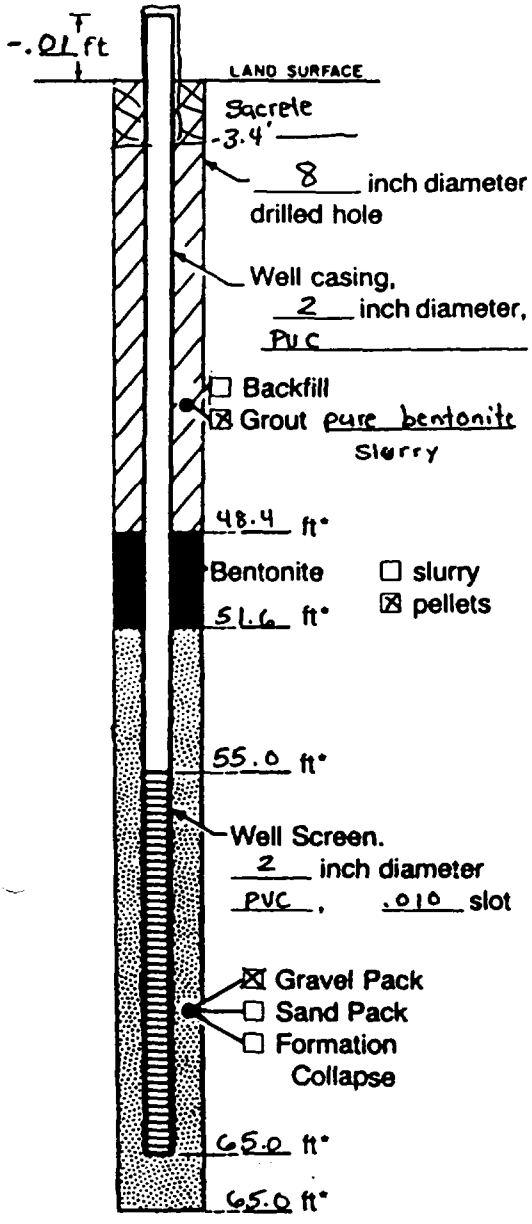

Measuring Point is Top of Well Casing Unless Otherwise Noted.

*Depth Below Land Surface

Project ORMET / R0738H08 Well PPb-06
Town/City Hannibal
County Monroe State OHIO
Permit No.
Land-Surface Elevation and Datum 663.05 feet MSL ☒ surveyed ☐ estimated
Installation Dates(s) 3/28/88, 3/29/88
Drilling Method HSA
Drilling Contractor Pennsylvania Drilling Co.
Drilling Fluid fr approved water source

Development Techniques(s) and Date(s)
BAILED 6/3/88

Fluid Loss During Drilling 60 gal gallons
Water Removed During Development ~30 gallons
Static Depth to Water 47.21 (6-20-88) feet below M.P.
Pumping Depth to Water feet below M.P.
Pumping Duration hours
Yield gpm Date
Specific Capacity gpm/ft
Well Purpose piezometer (water table)

Remarks Drilled PPb-06 down to 65.0', set well casing on bottom at 65.0', sandpacked around well casing from 65.0' to 51.6'; added pellets to ~51'; had combination bentonite pellets/formation collapse to 48.4; slurried w/ bentonite up to 3.4' b.g.l.; added pellets on top then capped hole w/ sacrete (covered PVC w/ protective cover & lock

Prepared by J.B. Naser

4/4/88

GERAGHTY & MILLER, INC.
Ground-Water Consultants

R0738H08-WELL06-0013

WELL CONSTRUCTION LOG

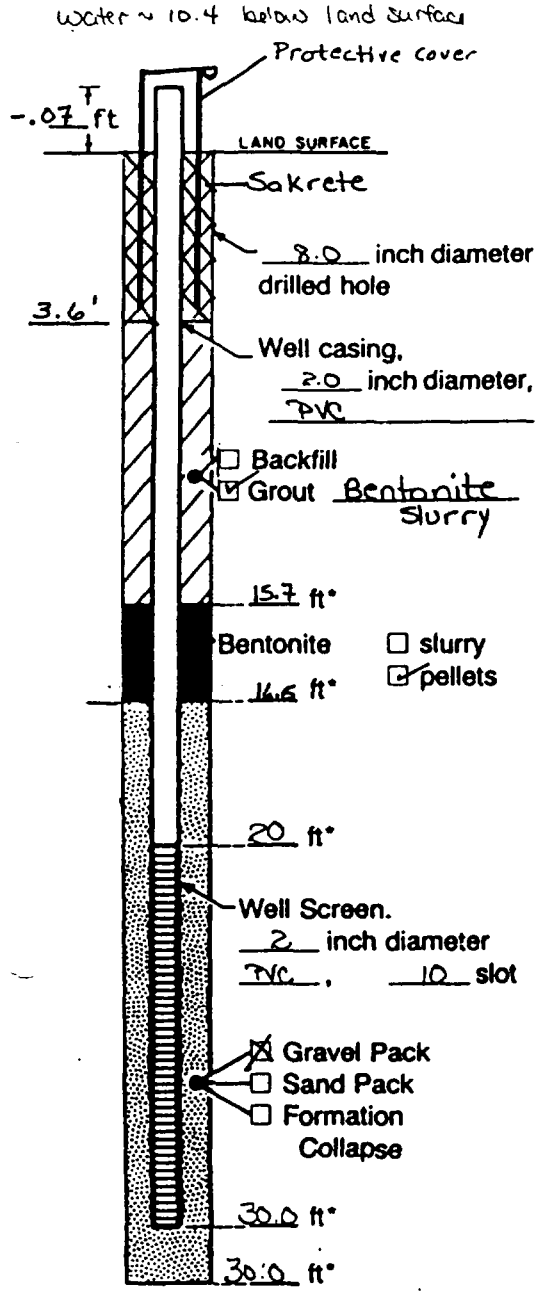

Measuring Point is Top of Well Casing Unless Otherwise Noted.

*Depth Below Land Surface

Project R0738H08 Well PPB-07

Town/City Hannibal

County Monroe State OH

Permit No.

Land-Surface Elevation and Datum 661.78 feet MSL ☒ surveyed ☐ estimated

Installation Dates(s) 4/4/88

Drilling Method

Drilling Contractor

Drilling Fluid Used clean water to flush out sand from bottom of augers 2.4'

Development Techniques(s) and Date(s)

BAILED 6/3/88

Fluid Loss During Drilling ~55 gal. gallons

Water Removed During Development 30 gallons

Static Depth to Water 14.27 (6-20-88) feet below M.P.

Pumping Depth to Water feet below M.P.

Pumping Duration hours

Yield gpm Date

Specific Capacity gpm/ft

Well Purpose Perched zone piezometer

Remarks Drilled PPB-07 down to 30.0'; set well casing on bottom at 30.0'; sand packed around well casing from 30.0' to 16.5' (13.5' sand pk added 0.8' of bentonite pellets on top of sand pack; tremied in bentonite slurry to 2.5' feet below land surface; added pellets on top then capped hole with sakrete. (covered PVC with protective cover w/ lock)

Prepared by K. Wells

GERAGHTY & MILLER, INC.
Ground-Water Consultants

R0738H08-WELL06-0014

WELL CONSTRUCTION LOG

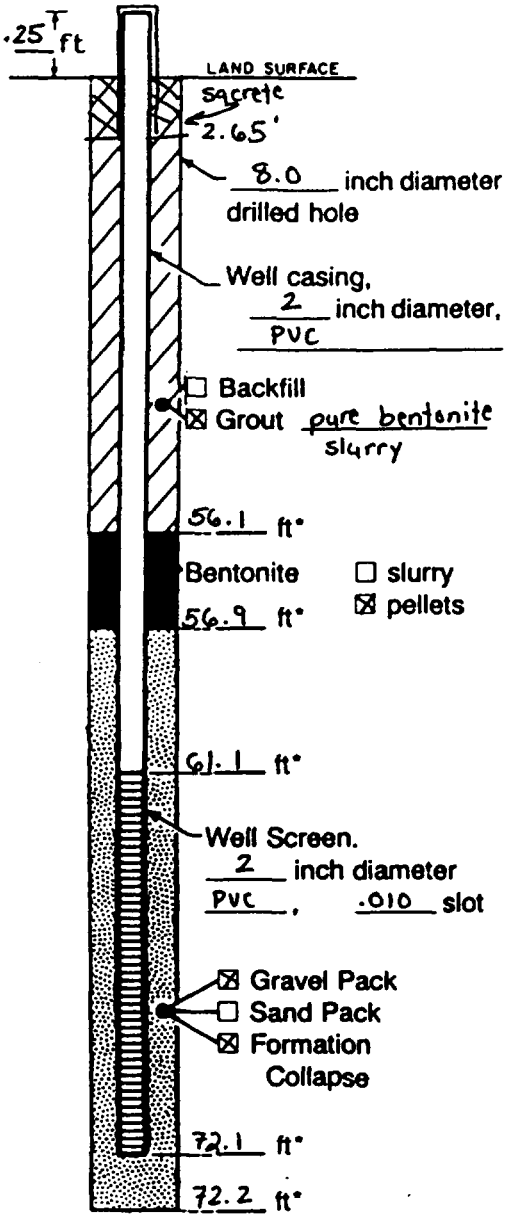

Measuring Point is Top of Well Casing Unless Otherwise Noted.

*Depth Below Land Surface

Project R0738H08 Well PPB-09
Town/City Hannibal
County Monroe State OHIO
Permit No.
Land-Surface Elevation and Datum 664.30 feet ☒ surveyed ☐ estimated
Installation Dates(s) 4/8/88 4/9/88
Drilling Method HSA
Drilling Contractor Pennsylvania Drilling Company
Drilling Fluid fresh water from approved water sourse used to flush sand from augers prior to well instalation
Development Techniques(s) and Date(s) BAILED 6/3/88
Fluid Loss During Drilling ~53 gal gallons
Water Removed During Development ~30 gallons
Static Depth to Water 44.24 (6-20-88) feet below M.P.
Pumping Depth to Water feet below M.P.
Pumping Duration hours
Yield gpm Date
Specific Capacity gpm/ft
Well Purpose Water Table Piezometer

Remarks hole drilled to 72.2', well casing installed to 72.1'; combination sand pack and formation collapse installed around-screen up to 56.9'; bentonite pellets (.8') installed around pvc up to 56.1; pure bentonite slurry installed with tremie line around PVC up to 2.65' below ground surface; protective cover installed; sacrete poured around protetctive cover and sacrete pad also made, lock put on protective cover

Prepared by J. B. Naser

GERAGHTY & MILLER, INC.
Ground-Water Consultants

R0738H08-WELLOG-0016

WELL CONSTRUCTION LOG

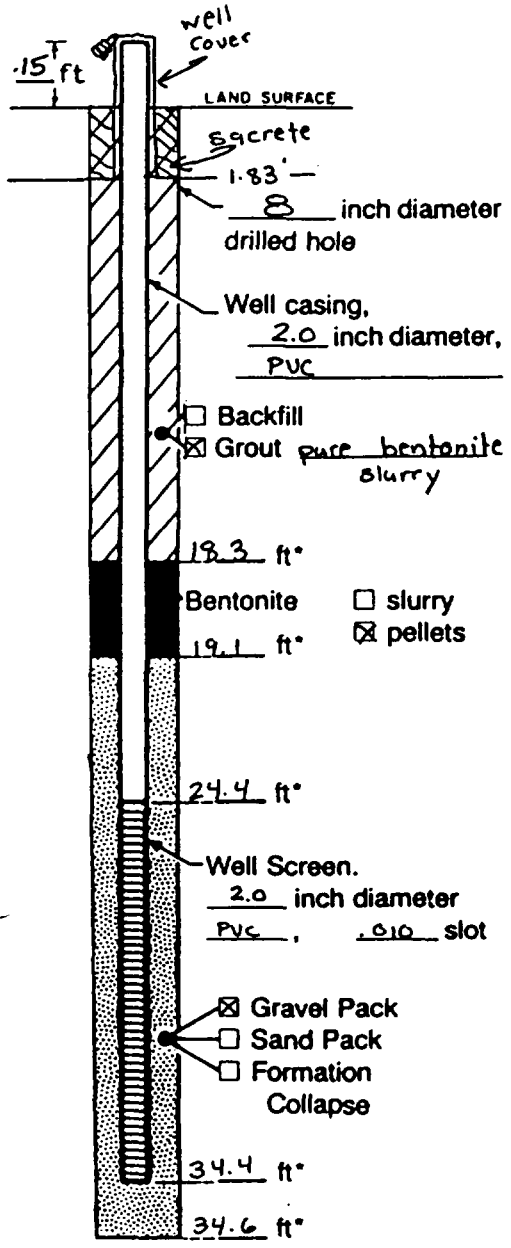

Measuring Point is Top of Well Casing Unless Otherwise Noted.

*Depth Below Land Surface

Project R0738H08 / ORMET Well ppb-10
Town/City Hannibal
County Monroe State OHIO
Permit No.
Land-Surface Elevation and Datum 663.49 feet MSL ☒ surveyed ☐ estimated
Installation Dates(s) 4/13/88, 4/14/88
Drilling Method HSA
Drilling Contractor Pennsylvania Drilling Co.
Drilling Fluid approved water used to flush sand from bottom of augers prior to pvc & screen (well) assembly.
Development Techniques(s) and Date(s)
BAILED 6/2/88

Fluid Loss During Drilling 43.25 gallons
Water Removed During Development 30 gallons
Static Depth to Water 13.53 (6-20-88) feet below M.P.
Pumping Depth to Water feet below M.P.
Pumping Duration hours
Yield gpm Date
Specific Capacity gpm/ft
Well Purpose Perched zone piezometer

Remarks hole bored to 34.6, well screen and PVC set at 34.4; sand pack installed around screen to 19.1 b.g.l.; combination pellets & formation collapse to 18.3' b.g.l.; pure bentonite slurry added w/ tremie line to 1.83' bgl; well cover w/ lock installed over cap and set w/ sacrete

Prepared by J.B. Naser

GERAGHTY & MILLER, INC.
Ground-Water Consultants

R0738H08-WELLOG-0015

WELL CONSTRUCTION LOG

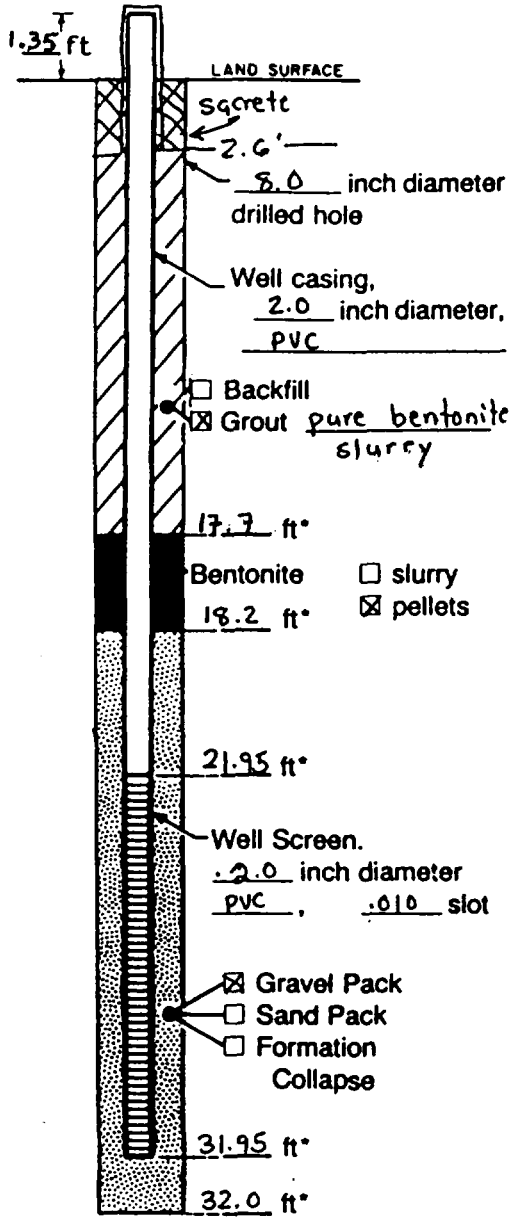

Measuring Point is Top of Well Casing Unless Otherwise Noted.

*Depth Below Land Surface

Project R0738H08 Well PPb-14
Town/City Hannibal
County Monroe State OHIO
Permit No.
Land-Surface Elevation
and Datum 659.29 feet ☒ surveyed
MSL ☐ estimated
Installation Dates(s) 4/19/88
Drilling Method HSA
Drilling Contractor Pennsylvania Drilling Company
Drilling Fluid water from approved water sourse used to flush sand from augers prior to well instalation
Development Techniques(s) and Date(s)
BAILED 6/7/88

Fluid Loss During Drilling 18-19 gallons
Water Removed During Development gallons
Static Depth to Water 23.88 (6-20-88) feet below M.P.
Pumping Depth to Water feet below M.P.
Pumping Duration hours
Yield gpm Date
Specific Capacity gpm/ft
Well Purpose Perched zone piezometer

Remarks set bottom of screen @ 31.9' below land surface - added sand pack around screen up to 18.2' below land surface - placed bentonite pellets on top of sand pack; added pellets up to 17.7' b.l.s. - bentonite slurry tremmied into bore up to 2.6' b.l.s.; a few handfulls of pellets added on top of slurry; protective casing w/ lock placed over pvc & cap; sacrete poured around casing up to ground surface; sacrete pad made around protective cover

Prepared by J. B. Naser