Attachment G

(M. Z. Zatorski, " " "
(W. S. Randle, " " "
W. F. Stafford, " " "
(C. A. Cremeans, " " "
(M. P. O'Brien, " " "
(L. A. Kremer, " " "
(File: TAC 12.7
~~R. W. Wheatley,~~ " " "
J. T. Sixsmith, " " "

US EPA RECORDS CENTER REGION 5
508902

East Chicago, Indiana
September 8, 1976

File TAC 12.4

To: W. Laud

From: T. J. Valenti TJV

Solid Waste Disposal

Attached is the final Scope of Work for disposal of our solid process wastes in Gary Land Development landfill.

This should be attached to the Purchase Requisition which you are preparing for H. E. Burman.

TJV:mv

Attachments

SCOPE OF WORK

[illegible] OF SOLID WASTES OFF THE EAST CHICAGO PLANT

[illegible]ction

This report contains details relating to completion of a solids handling contract for disposal of DuPont East Chicago solid process wastes in an off-plant landfill.

II. Timing

A trial period of 40 loads will begin approximately 10/76.

III. Background

- Present Conditions

  All solid process wastes generated from environmental control operations are landfilled on the plant.

- Proposal

  A waste hauler will provide 20 cu. yd. roll off containers to haul the waste solids to Gary Land Development landfill. The containers will be designed to keep material from leaking or slopping onto the road.

IV. Process Description

1. Roll off containers are to be provided by the waste hauler. The waste hauler is to provide sufficient number of containers to service the plant.

2. Plant responsibilities:
   - Remove tarpaulin from empty container
   - Load container
   - Brush loose material from side of container
   - Fasten tarpaulin
   - Call for pickup of full container.

3. Waste Hauler responsibilities
   - Spot empty containers
   - Pick up full containers
   - Check the tarpaulin for proper installation
     -- Adjust if required.
   - Dispose of material in Gary Land Development landfill except when:
     1) Material leaks from the container when it is being lifted onto the truck.
     2) DuPont specifies otherwise.

     In these cases dispose of the material in the DuPont landfill.
   - Dump at landfill. Remove any material which sticks to the inside of the container.
   - Maintain tailgate gasket and tarpaulin in good condition.
   - Fasten tarp before leaving landfill.
   - Return empty container.

4. Waste Hauler will weigh containers in and out on the Plant scale once/week when specified by DuPont.

V. Design Basis

- Volumes (approximate)*

Source	Ave.	Max.
1. Environmental Control-Precoat Filters	20 cu. yd/day	40 cu. yd/day
2. Environmental Control-Hardtac	4	8
3. Sulfamic-Straight Line	3-3/4	7-1/2
Total	27-3/4 cu. yd/day	55-1/2 cu. yd/day

Based on a volume produced over a weekend at capacity.

$$\frac{3(55.5 \text{ cu.yd/day})}{20 \text{ cu.yd/tray}} = 8 \frac{\text{Trays}}{\text{Weekend}}$$

*Subject to change based on operating rate.

- Contractor to pick up containers Monday through Friday during the hours of 7:30 a.m. and 4:00 p.m. as requested by DuPont.

VI. Equipment Details

- The waste hauler is to provide 20 cubic yard containers equipped with gaskets on the rear tailgate to prevent liquid seepage.
- The waste hauler is to provide tarpaulins for the tops of the containers to prevent solids from falling from the containers.
- The containers will be approximately 18' x 4' x 88"

VII. Architectural & Civil

- See the following page for the plant map showing locations of the containers.

VIII. Waste Composition and Quantities

- Quantities
  - Environmental Control Precoat Filter Waste — 7150 T/yr.
  - Environmental Control Hardtac — 885 T/yr.
  - Sulfamic Straight Line — 1400 T/yr.
- Analysis

	PRECOAT FILTER	STRAIGHT LINE	HARDTAC	TOTAL (TONS/YR.)	OVERALL COMPOSITION
Free H_2O	63.1%	39.6%	3.1%	5100 T/yr.	53%
$Ca(OH)_2$	3.1	4.8	11.8	400	4
$3SiO_2 \cdot H_2O$	29	.2	.01	2100	22
Na_2O	.1	0.0	.06	8	.08
Al_2O_3	0.0	0.0	0.0	0	0
Fe_2O_3	.02	.03	.03	2	.02
$CaSO_4 \cdot 2H_2O$	4.8	54.4	85.0	1900	20
NH_3	-	.3	-	4	.04
$NH_3SO_3NH_2$	-	1.5	-	21	.22
(Ba,Cd,Cu, Pb,Ni,Zn	< 9.5ppm	< 4.9ppm	< 3.5ppm	.08	0
	100%	100%	100 %	9535 T/yr.	100%

FROM LETTER, TJ Valenti to W Lund
Sept 8, 1976

7650 HUB PARKWAY • CLEVELAND, OHIO 44125 • (216) 447-1550 Attachment G

TO E. I. DuPont DeNemours & Co.
LOGE 44477 Bldg. 110
5215 Kennedy Ave.
East Chicago, IN 46312

Attn: P. Walko

File

DATE	CUSTOMER DESCRIPTION	YOUR ORDER NO.	REPORT NO.
11/16/79	Sludge (Environmental Precoat Filter)	LOGE 44477	11019-

ELEMENTS DETERMINED	SAMPLE NO.	SAMPLE NO.	SAMPLE NO.	SAMPLE NO.	SAMPLE NO.	SAMPLE NO.	SAMPLE NO.
	10-30-79						
SiO2	9.82						
Al2O3	0.028						
Fe2O3	0.031						
Na2O	0.23						
Tot.S	4.64						
Tot.Ca	1.59						

Lab No. 12867

We certify the above analysis to be the true results on the designated samples.

NATIONAL SPECTROGRAPHIC LABORATORIES, INC.

Chief Chem

Sworn to and subscribed before me a Notary Public in and for the County of Cuyahoga, State of Ohio, this

DAY OF , 19

The information and data in this report are rendered under the conditions outlined in "Service Terms & Conditions" previously submitted. NSL assumes no liability of and with respect to the use by the customer or any third person of any information contained in this service. NSL's only liability shall be limited to repeating the analysis without charge to customer or making a refund. No part of this report is to be reproduced for advertising without our consent in writing.

DUPLICATE REPORT OF ANALYSIS

003 pH CONTROL SYSTEM

A new 1,500 gallon tank with agitator and baffles for continuous pH adjustment of the sewer stream.

003 FRESH SULFURIC ACID STORAGE TANK

An existing 4700 gal. tank used for storage of 66°Be' (93.19%) sulfuric acid.

003 SODIUM HYDROXIDE STORAGE TANK

An existing 30,000 gal. tank for storage of 50% sodium hydroxide.

LIME PRECIPITATION

(See separate write-up: "Ludox" Lime Precipitation).

WEAK WASTE ACID SURGE TANK

Existing tank, polyester fiberglass construction, 20,000 gallons.

003 SAND FILTERS

Two new pressure sand filters, each 8 feet in diameter x 16 feet high.

003 MONITOR STATION

A concrete pit in the sewer equipped with instrumentation for continuous recording of:

- pH
- conductivity
- temperature
- flow rate

Monitor pit will also contain a device for continuous flow-proportioned sampling of 003 effluent.

Rev. 6/73

- "AMMATE" (AMMONIUM SULFAMATE) DRY CAKE FILTER

Filter cake from the existing filter will be repulped and refiltered to reduce soluble materials. The filtrate will be recycled to the process and solids will be taken to the landfill.

AMMATE® (AMMONIUM SULFAMATE) DRY CAKE FILTER

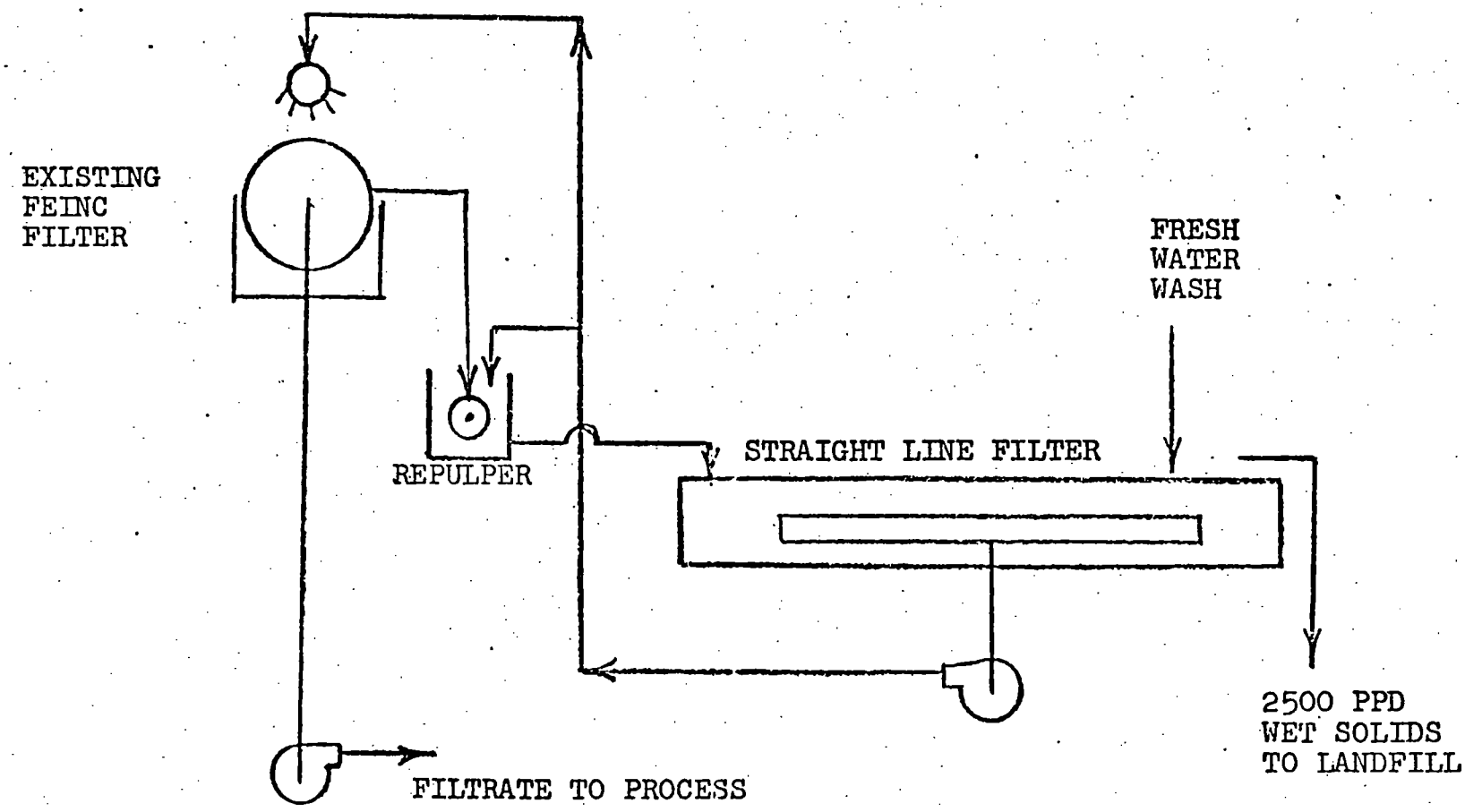

DESCRIPTION OF PROPOSED EQUIPMENT

FEINC FILTER

Existing rotary vacuum filter, 5 ft. dia. x 5 ft. long. Manufactured by FEINC. Modified by the addition of a 1 ft. x 7 1/2 ft. repulper manufactured by Ametek, Inc.

STRAIGHT LINE FILTER

A new 2 ft. wide x 7 ft. long horizontal belt vacuum filter, manufactured by Straight Line Filters, Inc., complete with a Siemens, liquid-ring vacuum pump, three stainless steel receivers and three Durco filtrate pumps.

- <u>Ludox® (Colloidal Silica) Lime Precipitation</u>

  Dilute waste sulfuric acid from Ludox® ion exchangers will be treated with lime to precipitate calcium sulfate. Calcium sulfate slurry will be filtered and solids taken to the landfill, thus reducing sulfate discharges to the river.

LIME PRECIPITATION OF "LUDOX" WASTE ACID

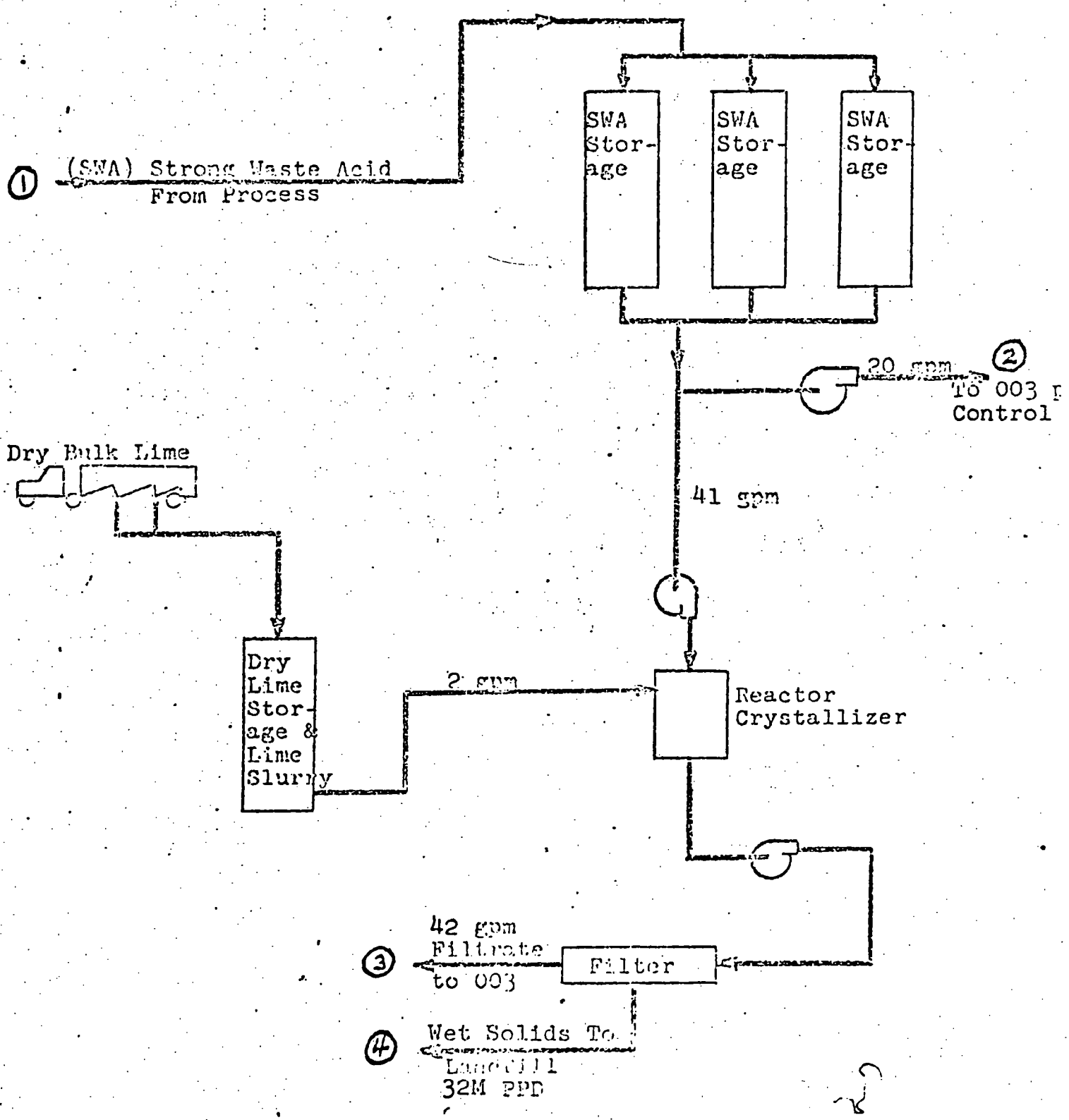

Rev. 6/73 Streams 1 — 4, are shown on West End (003) pH and Suspended Solids Control Flow Diagram.

DESCRIPTION OF PROPOSED EQUIPMENT

Strong Waste Acid Storage Tank

Three new 33,000 gallon storage tanks for dilute sulfuric acid service. Tanks to be made of acid resistant glass fiber reinforced polyester.

"Portube" - Package Lime Storage and Slurrying Unit

New 12' dia. 55' high unit for storing 50 tons of lime and producing a 35% milk-of-lime slurry on demand.

Neutralizer - Crystallizer

A new 15,000 gallon agitated vessel with automatic feed controls for continuous neutralization of waste acid.

Calcium Sulfate Filter

A new continuous rotary vacuum filter for dry cake discharge of calcium sulfate.

Rev. 6/73