US EPA RECORDS CENTER REGION 5
491597

# SAMPLING DATA

# ecology and environment, inc.

111 WEST JACKSON BLVD., CHICAGO, ILLINOIS 60604

International Specialists in the Environment

PHONE: (312) 663-9415
TELECOPIER: (312) 663-0791


## TELECOPIER TRANSMISSION FORM

DATE: 9/14/90 TIME: 2:55PM TOTAL NO. OF PAGES 7
(Inc. Transmission Form)

TO: Lowell Metzger

COMPANY: OHM Remediation Services

TELECOPIER PHONE NO.: (419) 424-4997

FROM: Cindy Schultz

SPECIAL INSTRUCTIONS:

For Operator's Use Only

JOB CHARGE: FM1305

SENT BY:

NA:7

# ecology and environment, inc.

111 WEST JACKSON BLVD., CHICAGO, ILLINOIS 60604

International Specialists in the Environment

PHONE: (312) 663-9415
TELECOPIER: (312) 663-0791


## TELECOPIER TRANSMISSION FORM

DATE: 9/13/90 TIME: 1:20PM TOTAL NO. OF PAGES 7
(Inc. Transmission Form)

TO: Phillip Kienle

COMPANY: GMC

TELECOPIER PHONE NO.: 313 578-3965

FROM: Cindy Schultz

SPECIAL INSTRUCTIONS:

**For Operator's Use Only**

JOB CHARGE:

SENT BY:

NA:7

# ROUTINE ANALYTICAL SERVICES

# CONTRACT REQUIRED DETECTION AND QUANTITATION LIMITS

Contract Laboratory Program
Target Compound List
Quantitation Limits

| COMPOUND | CAS # | WATER | SOIL SEDIMENT SLUDGE |
|---|---|---|---|
| Chloromethane | 74-87-3 | 10 ug/L | 10 ug/Kg |
| Bromomethane | 74-83-9 | 10 | 10 |
| Vinyl chloride | 75-01-4 | 10 | 10 |
| Chloroethane | 75-00-3 | 10 | 10 |
| Methylene chloride | 75-09-2 | 5 | 5 |
| Acetone | 67-64-1 | 10 | 5 |
| Carbon disulfide | 75-15-0 | 5 | 5 |
| 1,1-dichloroethene | 75-35-4 | 5 | 5 |
| 1,1-dichloroethane | 75-34-3 | 5 | 5 |
| 1,2-dichloroethene (total) | 540-59-0 | 5 | 5 |
| Chloroform | 67-66-3 | 5 | 5 |
| 1,2-dichloroethane | 107-06-2 | 5 | 5 |
| 2-butanone (MEK) | 78-93-3 | 10 | 10 |
| 1,1,1-trichloroethane | 71-55-6 | 5 | 5 |
| Carbon tetrachloride | 56-23-5 | 5 | 5 |
| Vinyl acetate | 108-05-4 | 10 | 10 |
| Bromodichloromethane | 75-27-4 | 5 | 5 |
| 1,2-dichloropropane | 78-87-5 | 5 | 5 |
| cis-1,3-dichloropropene | 10061-01-5 | 5 | 5 |
| Trichloroethene | 79-01-6 | 5 | 5 |
| Dibromochloromethane | 124-48-1 | 5 | 5 |
| 1,1,2-trichloroethane | 79-00-5 | 5 | 5 |
| Benzene | 71-43-2 | 5 | 5 |
| Trans-1,3-dichloropropene | 10061-02-6 | 5 | 5 |
| Bromoform | 75-25-2 | 5 | 5 |
| 4-Methyl-2-pentanone | 108-10-1 | 10 | 10 |
| 2-Hexanone | 591-78-6 | 10 | 10 |
| Tetrachloroethene | 127-18-4 | 5 | 5 |
| Tolene | 108-88-3 | 5 | 5 |
| 1,1,2,2-tetrachloroethane | 79-34-5 | 5 | 5 |
| Chlorobenzene | 108-90-7 | 5 | 5 |
| Ethyl benzene | 100-41-4 | 5 | 5 |
| Styrene | 100-42-5 | 5 | 5 |
| Xylenes (total) | 1330-20-7 | 5 | 5 |

Table A
Contract Laboratory Program
Target Compound List
Semivolatiles Quantitation Limits

| COMPOUND | CAS # | WATER | SOIL SEDIMENT SLUDGE |
|---|---|---|---|
| Phenol | 108-95-2 | 10 ug/L | 330 ug/Kg |
| bis(2-Chloroethyl) ether | 111-44-4 | 10 | 330 |
| 2-Chlorophenol | 95-57-8 | 10 | 330 |
| 1,3-Dichlorobenzene | 541-73-1 | 10 | 330 |
| 1,4-Dichlorobenzene | 106-46-7 | 10 | 330 |
| Benzyl Alcohol | 100-51-6 | 10 | 330 |
| 1,2-Dichlorobenzene | 95-50-1 | 10 | 330 |
| 2-Methylphenol | 95-48-7 | 10 | 330 |
| bis(2-Chloroisopropyl) ether | 108-60-1 | 10 | 330 |
| 4-Methylphenol | 106-44-5 | 10 | 330 |
| N-Nitroso-di-n-dipropylamine | 621-64-7 | 10 | 330 |
| Hexachloroethane | 67-72-1 | 10 | 330 |
| Nitrobenzene | 98-95-3 | 10 | 330 |
| Isophorone | 78-59-1 | 10 | 330 |
| 2-Nitrophenol | 88-75-5 | 10 | 330 |
| 2,4-Dimethylphenol | 105-67-9 | 10 | 330 |
| Benzoic Acid | 65-85-0 | 50 | 1600 |
| bis(2-Chloroethoxy) methane | 111-91-1 | 10 | 330 |
| 2,4-Dichlorophenol | 120-83-2 | 10 | 330 |
| 1,2,4-Trichlorobenzene | 120-82-1 | 10 | 330 |
| Naphthalene | 91-20-3 | 10 | 330 |
| 4-Chloroaniline | 106-47-8 | 10 | 330 |
| Hexachlorobutadiene | 87-68-3 | 10 | 300 |
| 4-Chloro-3-methylphenol | 59-50-7 | 10 | 330 |
| 2-Methylnaphthalene | 91-57-6 | 10 | 330 |
| Hexachlorocyclopentadiene | 77-47-4 | 10 | 330 |
| 2,4,6-Trichlorophenol | 88-06-2 | 10 | 330 |
| 2,4,5-Trichlorophenol | 95-95-4 | 50 | 1600 |
| 2-Chloronaphthalene | 91-58-7 | 10 | 330 |
| 2-Nitroaniline | 88-74-4 | 50 | 1600 |
| Dimethylphthalate | 131-11-3 | 10 | 330 |
| Acenaphthylene | 208-96-8 | 10 | 330 |
| 2,6-Dinitrotoluene | 606-20-2 | 10 | 330 |
| 3-Nitroaniline | 99-09-2 | 50 | 1600 |
| Acenaphthene | 83-32-9 | 10 | 330 |
| 2,4-Dinitrophenol | 51-28-5 | 50 | 1600 |
| 4-Nitrophenol | 100-02-7 | 50 | 1600 |
| Dibenzofuran | 132-64-9 | 10 | 330 |
| 2,4-Dinitrotoluene | 121-14-2 | 10 | 330 |
| Diethylphthalate | 84-66-2 | 10 | 330 |
| 4-Chlorophenyl-phenyl ether | 7005-72-3 | 10 | 330 |

Table A
Contract Laboratory Program
Target Compound List
Semivolatiles Quantitation Limits

| COMPOUND | CAS # | WATER | SOIL SLUDGE SEDIMENT |
|---|---|---|---|
| Fluorene | 86-73-7 | 10 ug/L | 330 ug/Kg |
| 4-Nitroaniline | 100-01-6 | 50 | 1600 |
| 4,6-Dinitro-2-methylphenol | 534-52-1 | 50 | 1600 |
| N-nitrosodiphenylamine | 86-30-6 | 10 | 330 |
| 4-Bromophenyl-phenylether | 101-55-3 | 10 | 330 |
| Hexachlorobenzene | 118-74-1 | 10 | 330 |
| Pentachlorophenol | 87-86-5 | 50 | 1600 |
| Phenanthrene | 85-01-8 | 10 | 330 |
| Anthracene | 120-12-7 | 10 | 330 |
| Di-n-butylphthalate | 84-74-2 | 10 | 330 |
| Fluoranthene | 206-44-0 | 10 | 330 |
| Pyrene | 129-00-0 | 10 | 330 |
| Butylbenzylphthalate | 85-68-7 | 10 | 330 |
| 3,3'-Dichlorobenzidine | 91-94-1 | 20 | 660 |
| Benzo(a)anthracene | 56-55-3 | 10 | 330 |
| Chrysene | 218-01-9 | 10 | 330 |
| bis(2-Ethylhexyl)phthalate | 117-81-7 | 10 | 330 |
| Di-n-octylphthalate | 117-84-0 | 10 | 330 |
| Benzo(b)fluoranthene | 205-99-2 | 10 | 330 |
| Benzo(k)fluoranthene | 207-08-9 | 10 | 330 |
| Benzo(a)pyrene | 50-32-8 | 10 | 330 |
| Indeno(1,2,3-cd)pyrene | 193-39-5 | 10 | 330 |
| Dibenz(a,h)anthracene | 53-70-3 | 10 | 330 |
| Benzo(g,h,i)perylene | 191-24-2 | 10 | 330 |

Table A
Contract Laboratory Program
Target Compound List
Pesticide and PCB Quantitation Limits

| COMPOUND | CAS # | WATER | SOIL SEDIMENT SLUDGE |
|---|---|---|---|
| alpha-BHC | 319-84-6 | 0.05 ug/L | 8 ug/Kg |
| beta-BHC | 319-85-7 | 0.05 | 8 |
| delta-BHC | 319-86-8 | 0.05 | 8 |
| gamma-BHC (Lindane) | 58-89-9 | 0.05 | 8 |
| Heptachlor | 76-44-8 | 0.05 | 8 |
| Aldrin | 309-00-2 | 0.05 | 8 |
| Heptachlor epoxide | 1024-57-3 | 0.05 | 8 |
| Endosulfan I | 959-98-8 | 0.05 | 8 |
| Dieldrin | 60-57-1 | 0.10 | 16 |
| 4,4'-DDE | 72-55-9 | 0.10 | 16 |
| Endrin | 72-20-8 | 0.10 | 16 |
| Endosulfan II | 33213-65-9 | 0.10 | 16 |
| 4,4'-DDD | 72-54-8 | 0.10 | 16 |
| Endosulfan sulfate | 1031-07-8 | 0.10 | 16 |
| 4,4'-DDT | 50-29-3 | 0.10 | 16 |
| Methoxychlor (Mariate) | 72-43-5 | 0.5 | 80 |
| Endrin ketone | 53494-70-5 | 0.10 | 16 |
| alpha-Chlordane | 5103-71-9 | 0.5 | 80 |
| gamma-chlordane | 5103-74-2 | 0.5 | 80 |
| Toxaphene | 8001-35-2 | 1.0 | 160 |
| AROCLOR-1016 | 12674-11-2 | 0.5 | 80 |
| AROCLOR-1221 | 11104-28-2 | 0.5 | 80 |
| AROCLOR-1232 | 11141-16-5 | 0.5 | 80 |
| AROCLOR-1242 | 53469-21-9 | 0.5 | 80 |
| AROCLOR-1248 | 12672-29-6 | 0.5 | 80 |
| AROCLOR-1254 | 11097-69-1 | 1.0 | 160 |
| AROCLOR-1260 | 11096-82-5 | 1.0 | 160 |

Table A (Cont.)

CONTRACT LABORATORY PROGRAM

TARGET ANALYTE LIST (TAL)

INORGANIC DETECTION LIMITS

| Compound | Procedure | Detection Limits Water (µg/L) | Detection Limits Soil Sediment Sludge (mg/kg) |
|---|---|---|---|
| aluminum | ICP | 200 | 40 |
| antimony | furnace | 60 | 2.4 |
| arsenic | furnace | 10 | 2 |
| barium | ICP | 200 | 40 |
| beryllium | ICP | 5 | 1 |
| cadmium | ICP | 5 | 1 |
| calcium | ICP | 5,000 | 1,000 |
| chromium | ICP | 10 | 2 |
| cobalt | ICP | 50 | 10 |
| copper | ICP | 25 | 5 |
| iron | ICP | 100 | 20 |
| lead | furnace | 5 | 1 |
| magnesium | ICP | 5,000 | 1,000 |
| manganese | ICP | 15 | 3 |
| mercury | cold vapor | 0.2 | 0.008 |
| nickel | ICP | 40 | 8 |
| potassium | ICP | 5,000 | 1,000 |
| selenium | furnace | 5 | 1 |
| silver | ICP | 10 | 2 |
| sodium | ICP | 5,000 | 1,000 |
| thallium | furnace | 10 | 2 |
| tin | ICP | 40 | 8 |
| vanadium | ICP | 50 | 10 |
| zinc | ICP | 20 | 4 |
| cyanide | color | 10 | 2 |

3767:1

# ecology and environment, inc.

111 WEST JACKSON BLVD., CHICAGO, ILLINOIS 60604

International Specialists in the Environment

PHONE: (312) 663-9415
TELECOPIER: (312) 663-0791


## TELECOPIER TRANSMISSION FORM

DATE: 6/18/90 TIME: 9:10 TOTAL NO. OF PAGES 6 (Inc. Transmission Form)

TO: Ahmet Moustafa

COMPANY: OhioEPA - NEDO

TELECOPIER PHONE NO.: 216/487-0769

FROM: Bill Schaefer

SPECIAL INSTRUCTIONS: None

---

For Operator's Use Only

JOB CHARGE: FT1305

SENT BY: Bill Schaefer

NA:7

OhioEPA
State of Ohio Environmental Protection Agency
Northeast District Office
2110 E. Aurora Road
Twinsburg, Ohio 44087

Site Maps

# FAX-Transmittal Sheet

**To:** Mr. Bill Shaffer
ECOL. & ENV.

**FAX Number:** 1-312-663-0791

**Subject:** GMC, Elyria
PARCEL "A" & "B" LOCATIONS; Monitoring Well Location MAPS

• NEDO

**From:** Ahmed A. Mustafa

**Date:** June 18, 1990

**Pages to follow :** Three (3).
(Include Cover Sheet)

If you have any questions, call
216/425-9171 ask for sender.

Return FAX number: 216/487-0769

OhioEPA

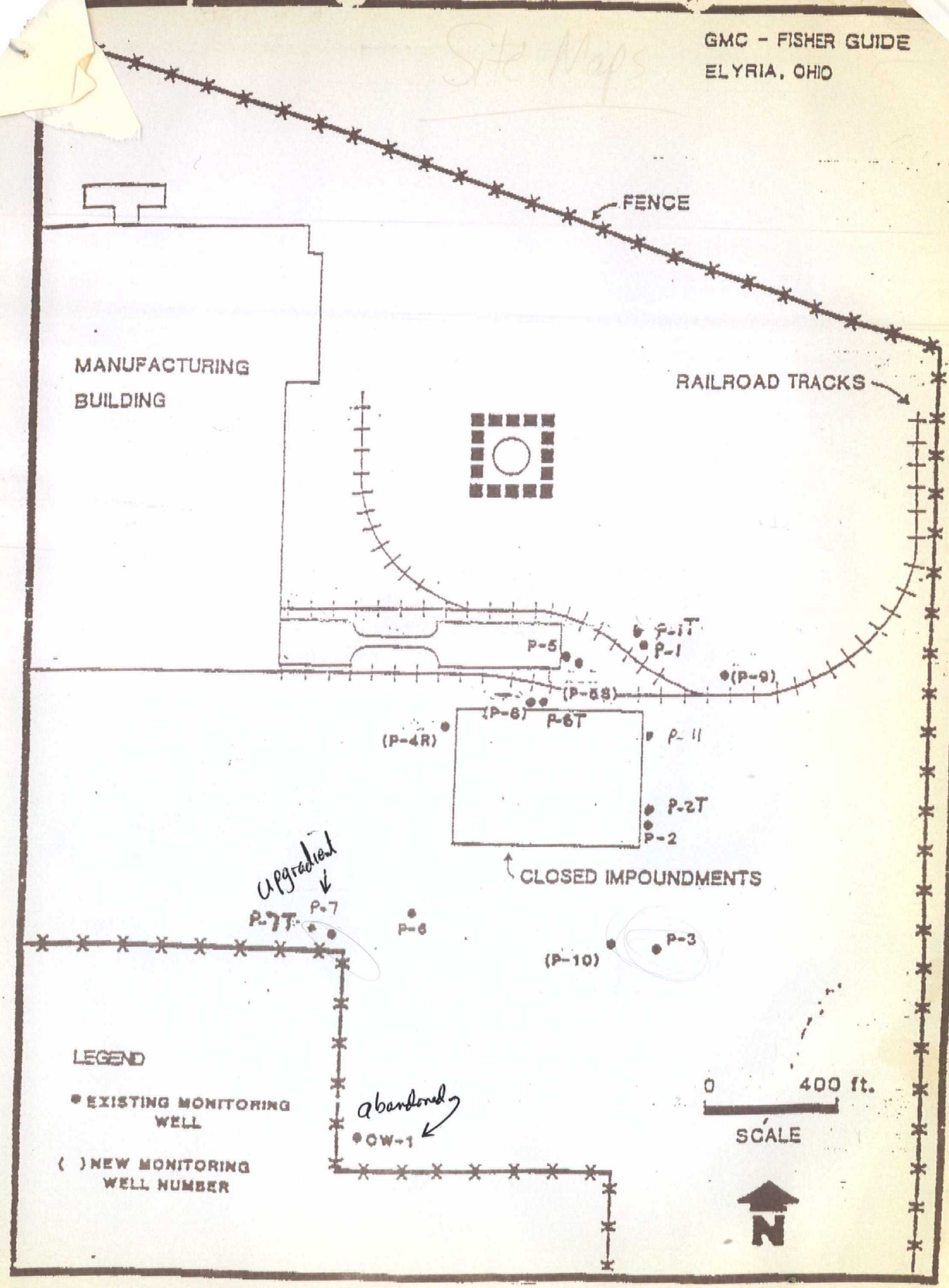


FIGURE 4 - MONITOR WELL LOCATION MAP
"AND RENUMBERING OF WELLS"

JUN 18 '90 09:26 NEDO OHIO EPA

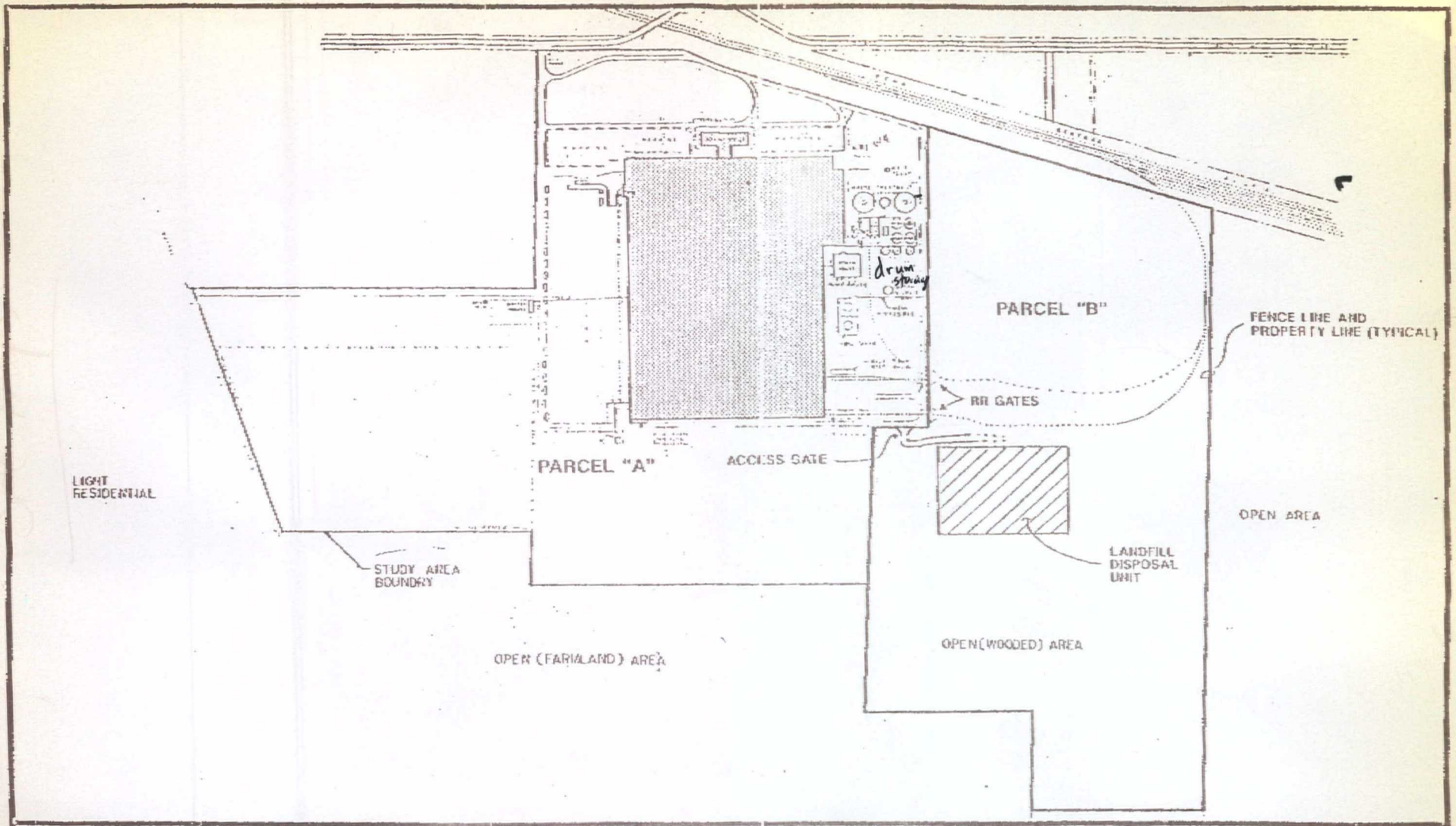


FIGURE #3 General Site Layout, Fisher Guide, Elyria Ohio Facility

11-2-88

N

1"=450'

JUN 18 '90 9:21 1 216 487 0769 PAGE.02

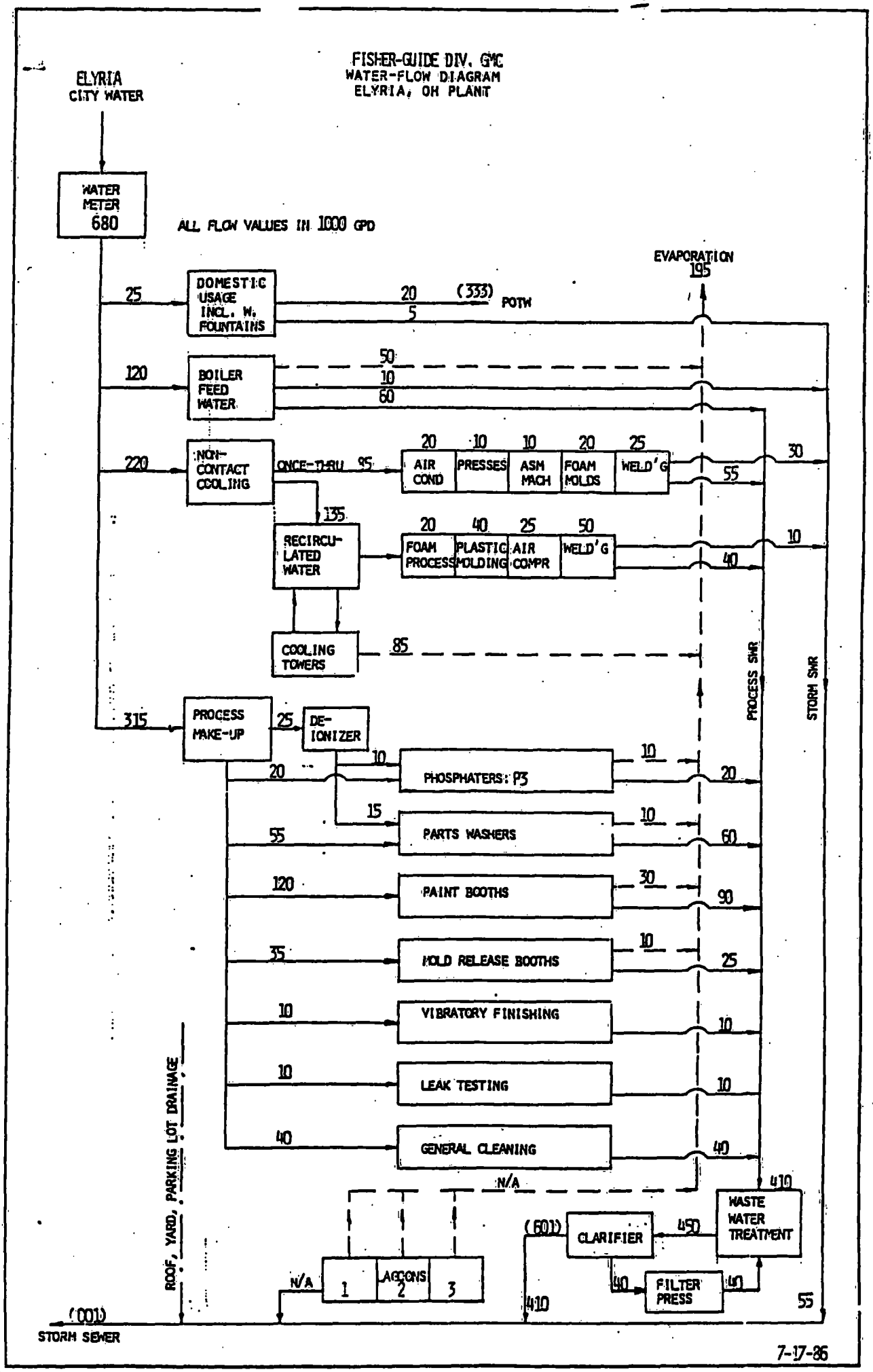
FISHER-GUIDE DIV. GMC
WATER-FLOW DIAGRAM
ELYRIA, OH PLANT
ELYRIA
CITY WATER
WATER METER
680
ALL FLOW VALUES IN 1000 GPD
EVAPORATION
195
25
DOMESTIC USAGE INCL. W. FOUNTAINS
20
(333)
POTW
5
120
BOILER FEED WATER
50
10
60
220
NON-CONTACT COOLING
ONCE-THRU
95
20
10
10
20
25
AIR COND
PRESSES
ASM MACH
FOAM MOLDS
WELD'G
30
55
135
RECIRCULATED WATER
20
40
25
50
FOAM PROCESS
PLASTIC MOLDING
AIR COMPR
WELD'G
10
40
COOLING TOWERS
85
PROCESS SWR
STORM SWR
315
PROCESS MAKE-UP
25
DE-IONIZER
10
20
PHOSPHATERS: P3
10
20
15
55
PARTS WASHERS
10
60
120
PAINT BOOTHS
30
90
35
MOLD RELEASE BOOTHS
10
25
10
VIBRATORY FINISHING
10
10
LEAK TESTING
10
40
GENERAL CLEANING
40
N/A
410
WASTE WATER TREATMENT
(601)
CLARIFIER
450
N/A
1
ACCONS
2
3
40
FILTER PRESS
40
410
55
ROOF, YARD, PARKING LOT DRAINAGE
(001)
STORM SEWER
7-17-86

**LABORATORY: BETZ** **CASE: 14906**

**ICAP ANALYSIS:** The matrix spike recovery for Ag (0.0%) is out of control. MEKS59 is estimated (J) due to low bias. All remaining Ag results are <IDL and therefore unusable (R).

The matrix spike recovery for Sb (12.2%) is out of control. MEKS56-59 are estimated (J) due to low bias. All remaining Sb results are <IDL and therefore unusable (R).

The matrix spike recovery for V (67.6%) is out of control. MEKS57 and 60-62 are estimated (J) due to low bias. All remaining V results are estimated (UJ) due to a possible elevated detection limit.

The duplicate audit (41.9% RPD) and the matrix spike recovery (280.0%) for Mn are out of control. All Mn results are estimated (J) due to poor precision and high bias.

The matrix spike recoveries for Cr (-7240.5%), Ni (-1057.8%), Cu (-625.3%), and Zn (-278.1%) were not flagged by the lab since their sample concentrations are more than 4X greater than the spike concentrations. All Cr, Cu, Ni, and Zn results are acceptable.

The duplicate audit for Ca (33.9% RPD) was flagged by the lab based on the criteria for water. The technical criteria for soils 35% was not exceeded. All Ca results are acceptable.

**GFAA ANALYSIS:** The matrix spike recovery for As (42.5%) is out of control. All As results are estimated (J) due to low bias.

The matrix spike recovery for Pb (3770.4%) was not flagged by the lab since its sample concentration is more than 4X greater than the spike concentration. Pb results are not qualified on this basis. The duplicate audit for Pb (55.1% RPD) is out of control. All Pb results are estimated (J) due to poor precision.

The Se result for sample MEKS60 was flagged by the lab with a (W) flag and is estimated (J) due to interference.

The duplicate audit for Tl (200% RPD) exceeds 35% RPD, but the lab did not flag it since its duplicate difference is less than 2X CRDL. Tl results are not qualified on this basis. The lab flagged samples MEKS56, 57, 58, and 62 with (W) flags; they are estimated (UJ) due to interference.

**OTHER QUALIFIERS:** The matrix spike recovery for Hg (134.7%) is out of control. Samples MEKS56, 57, and 59 are estimated (J) due to high bias. All remaining Hg results are <IDL and therefore acceptable.

The matrix spike recovery for CN (292.9%) is out of control. Samples MEKS56, 57, and 59 are estimated (J) due to high bias. All remaining CN results are <IDL and therefore acceptable.

Reviewed by: Jill Siegrist

Date: 11-27-90

Jill Siegrist

DPO. [ ] ACTION [X] FYI

Region V

# INORGANIC REGIONAL DATA ASSESSMENT SUMMARY

CASE NO. KA06

SDG NO. MEKS56

SOW 7/88

LABORATORY Beltz

DATA USER FIT

REVIEW COMPLETION DATE 11-27-90

NO. OF SAMPLES ____ WATER 7 SOIL ____ OTHER ____

REVIEWER [ ] ESD [X] ESAT [ ] OTHER, CONTRACT/CONTRACTOR ____

| | ICP | AA | Hg | CYANIDE |
|---|---|---|---|---|
| 1. HOLDING TIMES | O | → | → | → |
| 2. INITIAL CALIBRATIONS | O | → | → | → |
| 3. CONTINUING CALIBRATIONS | O | → | → | → |
| 4. FIELD BLANKS (F = not applicable) | F | → | → | → |
| 5. LABORATORY BLANKS | O | → | → | → |
| 6. ICS | O | | | |
| 7. LCS | O | O | | |
| 8. DUPLICATE ANALYSIS | M | M | O | O |
| 9. MATRIX SPIKE | Z | M | M | M |
| 10. MSA | | O | | |
| 11. SERIAL DILUTION | O | | | |
| 12. SAMPLE VERIFICATION | O | → | → | → |
| 13. REGIONAL QC (F = not applicable) | F | → | → | → |
| 14. OVERALL ASSESSMENT | Z | M | M | M |

O = No problems or minor problems that do not affect data usability
X = No more than about 5% of the data points are qualified as either estimated or unusable
M = More than about 5% of the data points are qualified as estimated
Z = More than about 5% of the data points are qualified as unusable

DPO ACTION ITEMS: ____

AREAS OF CONCERN: ____

# QC EXCEPTION SUMMARY REPORT

CASE # 14906
DATA SET #
LAB Q.C.#
DATE: 11-27-90

SITE GMC Fischer Body Div (OH)
LAB Betz
REVIEWED BY Jill Siegrist

MATRIX: Soil
CONC. : Low (7)
MATRIX :
CONC. :

WATER SAMPLE SPK.
WATER SAMPLE DUP.
SOIL SAMPLE SPK.
SOIL SAMPLE DUP.

| | OVERALL CASE QC | | | | | | | | | MATRIX SPECIFIC QC | | | | | | SAMPLE SPECIFIC QC | | FIELD QC | | | REGIONAL QC | | | OTHER/ COMMENTS |
|---|---|---|---|---|---|---|---|---|---|---|---|---|---|---|---|---|---|---|---|---|---|---|---|---|
| | Holding Time | Cal Blanks | Int Calcs | Calcm Calcs | Prep Blk AQ | Prep Blk SOL | ICS | ICS % AQ | ICS % SOL | Sol Dup RPD | Sol Spk % R | AQ Dup RPD | AQ Spk % R | Ins Dup AQ | Ins Dup SOL | Sol Dup | Sol Spk | Blank | Dup RPD | Spike % R | Blank | Spike % R | Sample RPD | |
| Aluminum | | | | | | | | | | | | | | | | | | | | | | | | |
| Antimony | | | | | | | | | | | 12.2 | | | | | | | | | | | | | |
| Arsenic | | | | | | | | | | | 42.5 | | | | | | | | | | | | | |
| Barium | | | | | | | | | | | | | | | | | | | | | | | | |
| Beryllium | | | | | | | | | | | | | | | | | | | | | | | | |
| Cadmium | | | | | | | | | | | | | | | | | | | | | | | | |
| Calcium | | | | | | | | | | | | | | | | | | | | | | | | |
| Chromium | | | | | | | | | | | | | | | | | | | | | | | | |
| Cobalt | | | | | | | | | | | | | | | | | | | | | | | | |
| Copper | | | | | | | | | | | | | | | | | | | | | | | | |
| Iron | | | | | | | | | | | | | | | | | | | | | | | | |
| Lead | | | | | | | | | | 55.1 | | | | | | | | | | | | | | |
| Magnesium | | | | | | | | | | | | | | | | | | | | | | | | |
| Manganese | | | | | | | | | | 41.9 | 280.8 | | | | | | | | | | | | | |
| Mercury | | | | | | | | | | | 134.7 | | | | | | | | | | | | | |
| Nickel | | | | | | | | | | | | | | | | | | | | | | | | |
| Potassium | | | | | | -28.5 | | | | | | | | | | | | | | | | | | |
| Selenium | | | | | | | | | | | | | | | | | | | | | | | | |
| Silver | | | | | | | | | | | ~~0.0~~ | | | | | | | | | | | | | |
| Sodium | | | | | | -99.2 | | | | | | | | | | | | | | | | | | |
| Thallium | | | | | | | | | | | | | | | | | | | | | | | | |
| Tin | | | | | | | | | | | | | | | | | | | | | | | | |
| Vanadium | | | | | | | | | | | 67.6 | | | | | | | | | | | | | |
| Zinc | | | | | | | | | | | | | | | | | | | | | | | | |
| Cyanide | | | | | | | | | | | 292.9 | | | | | | | | | | | | | |

U. S. EPA - CLP
COVER PAGE - INORGANIC ANALYSIS DATA PACKAGE

Lab Name: BETZ LABS THE WOODLANDS Contract: 68-D9-0083

Lab Code: BETZ Case No.: 14906 SAS No.: SDG No.: MEKS56

SOW No.: 7/88

| EPA Sample No. | Lab Sample ID |
|---|---|
| MEKS56 | MEKS56 |
| MEKS56D | MEKS56D |
| MEKS56S | MEKS56S |
| MEKS57 | MEKS57 |
| MEKS58 | MEKS58 |
| MEKS59 | MEKS59 |
| MEKS60 | MEKS60 |
| MEKS61 | MEKS61 |
| MEKS62 | MEKS62 |

| | | |
|---|---|---|
| Were ICP interelement corrections applied? | Yes/No | NO |
| Were ICP background corrections applied? | Yes/No | YES |
| If yes, were raw data generated before application of background corrections? | Yes/No | NO |

Comments:

Corrected data

I certify that this data package is in compliance with the terms and conditions of the contract, both technically and for completeness, for other than the conditions detailed above. Release of the data contained in this hardcopy data package and in the computer-readable data submitted on floppy diskette has been authorized by the Laboratory Manager or the Manager's designee, as verified by the following signatures.

Signature: William W. Walton Name: William W. Walton

Date: NOVEMBER 02, 1990 Title: Laboratory Manager

U.S. EPA - CLP

1

INORGANIC ANALYSES DATA SHEET

EPA SAMPLE NO.

MEKS56

Lab Name: BETZ_LABS_THE_WOODLANDS__ Contract: 68-D9-0083

Lab Code: BETZ__ Case No.: 14906 SAS No.: _____ SDG No.: MEKS56

Matrix (soil/water): SOIL_ Lab Sample ID: MEKS56____

Level (low/med): LOW__ Date Received: 09/19/90

% Solids: _60.4

Concentration Units (ug/L or mg/kg dry weight): MG/KG

| CAS No. | Analyte | Concentration | C | Q | M |
|---|---|---|---|---|---|
| 7429-90-5 | Aluminum_ | 11100 | | | P_ |
| 7440-36-0 | Antimony_ | 253 | | N | P_ |
| 7440-38-2 | Arsenic__ | 21.9 | | SN | F_ |
| 7440-39-3 | Barium___ | 169 | | | P_ |
| 7440-41-7 | Beryllium | 1.2 | B | | P_ |
| 7440-43-9 | Cadmium__ | 10.6 | | | P_ |
| 7440-70-2 | Calcium__ | 55600 | | * | P_ |
| 7440-47-3 | Chromium_ | 22100 | | | P_ |
| 7440-48-4 | Cobalt___ | 36.5 | | | P_ |
| 7440-50-8 | Copper___ | 4370 | | | P_ |
| 7439-89-6 | Iron____ | 23600 | | | P_ |
| 7439-92-1 | Lead____ | 174 | | * | F_ |
| 7439-95-4 | Magnesium | 4860 | | | P_ |
| 7439-96-5 | Manganese | 397 | | N* | P_ |
| 7439-97-6 | Mercury__ | 0.41 | | N | CV |
| 7440-02-0 | Nickel___ | 9580 | | | P_ |
| 7440-09-7 | Potassium | 1620 | B | | P_ |
| 7782-49-2 | Selenium_ | 1.3 | B | | F_ |
| 7440-22-4 | Silver___ | 2.0 | U | N | P_ |
| 7440-23-5 | Sodium___ | 57.6 | B | | P_ |
| 7440-28-0 | Thallium_ | 0.66 | U | W | F_ |
| 7440-62-2 | Vanadium_ | 2.3 | U | N | P_ |
| 7440-66-6 | Zinc____ | 3360 | | | P_ |
| _____ | Cyanide__ | 30.6 | | N | C_ |
| _____ | _____ | _____ | | _____ | __ |

Color Before: BLUE_____ Clarity Before: _____ Texture: MEDIUM

Color After: BLUE_____ Clarity After: _____ Artifacts: _____

Comments:

FORM I - IN

7/88

U.S. EPA - CLP

005

1

INORGANIC ANALYSES DATA SHEET

EPA SAMPLE NO.

MEKS57

Lab Name: BETZ_LABS_THE_WOODLANDS__ Contract: 68-D9-0083

Lab Code: BETZ__ Case No.: 14906 SAS No.: _____ SDG No.: MEKS56

Matrix (soil/water): SOIL_ Lab Sample ID: MEKS57____

Level (low/med): LOW__ Date Received: 09/19/90

% Solids: _62.7

Concentration Units (ug/L or mg/kg dry weight): MG/KG

| CAS No. | Analyte | Concentration | C | Q | M |
|---|---|---|---|---|---|
| 7429-90-5 | Aluminum_ | 20600 | | | P_ |
| 7440-36-0 | Antimony_ | 80.4 | | N | P_ |
| 7440-38-2 | Arsenic__ | 25.7 | | SN | F_ |
| 7440-39-3 | Barium___ | 127 | | | P_ |
| 7440-41-7 | Beryllium | 1.3 | B | | P_ |
| 7440-43-9 | Cadmium__ | 7.7 | | | P_ |
| 7440-70-2 | Calcium__ | 37500 | | * | P_ |
| 7440-47-3 | Chromium_ | 6120 | | | P_ |
| 7440-48-4 | Cobalt___ | 25.0 | | | P_ |
| 7440-50-8 | Copper___ | 1820 | | | P_ |
| 7439-89-6 | Iron____ | 35300 | | | P_ |
| 7439-92-1 | Lead____ | 21.0 | | S* | F_ |
| 7439-95-4 | Magnesium | 9200 | | | P_ |
| 7439-96-5 | Manganese | 327 | | N* | P_ |
| 7439-97-6 | Mercury__ | 0.17 | | N | CV |
| 7440-02-0 | Nickel___ | 2990 | | | P_ |
| 7440-09-7 | Potassium | 3540 | | | P_ |
| 7782-49-2 | Selenium_ | 0.85 | B | | F_ |
| 7440-22-4 | Silver___ | 1.9 | U | N | P_ |
| 7440-23-5 | Sodium___ | 41.6 | B | | P_ |
| 7440-28-0 | Thallium_ | 0.64 | U | W | F_ |
| 7440-62-2 | Vanadium_ | 4.3 | B | N | P_ |
| 7440-66-6 | Zinc____ | 1470 | | | P_ |
| _____ | Cyanide__ | 8.7 | | N | C_ |
| _____ | _____ | _____ | | _____ | __ |

Color Before: BROWN____ Clarity Before: _____ Texture: MEDIUM

Color After: BLUE_____ Clarity After: _____ Artifacts: _____

Comments:

FORM I - IN

7/88

U.S. EPA - CLP

1

INORGANIC ANALYSES DATA SHEET

EPA SAMPLE NO.

MEKS58

Lab Name: BETZ_LABS_THE_WOODLANDS__ Contract: 68-D9-0083

Lab Code: BETZ__ Case No.: 14906 SAS No.: _____ SDG No.: MEKS56

Matrix (soil/water): SOIL_ Lab Sample ID: MEKS58____

Level (low/med): LOW__ Date Received: 09/19/90

% Solids: _41.2

Concentration Units (ug/L or mg/kg dry weight): MG/KG

| CAS No. | Analyte | Concentration | C | Q | M |
|---|---|---|---|---|---|
| 7429-90-5 | Aluminum_ | 27800 | | | P_ |
| 7440-36-0 | Antimony_ | 116 | | N | P_ |
| 7440-38-2 | Arsenic__ | 12.9 | | SN | F_ |
| 7440-39-3 | Barium___ | 177 | | | P_ |
| 7440-41-7 | Beryllium | 1.3 | B | | P_ |
| 7440-43-9 | Cadmium__ | 8.3 | | | P_ |
| 7440-70-2 | Calcium__ | 74000 | | * | P_ |
| 7440-47-3 | Chromium_ | 10000 | | | P_ |
| 7440-48-4 | Cobalt___ | 14.8 | B | | P_ |
| 7440-50-8 | Copper___ | 2090 | | | P_ |
| 7439-89-6 | Iron____ | 28200 | | | P_ |
| 7439-92-1 | Lead____ | 44.4 | | * | F_ |
| 7439-95-4 | Magnesium | 13300 | | | P_ |
| 7439-96-5 | Manganese | 467 | | N* | P_ |
| 7439-97-6 | Mercury__ | 0.23 | U | N | CV |
| 7440-02-0 | Nickel___ | 4590 | | | P_ |
| 7440-09-7 | Potassium | 3380 | | | P_ |
| 7782-49-2 | Selenium_ | 1.6 | B | | F_ |
| 7440-22-4 | Silver___ | 2.9 | U | N | P_ |
| 7440-23-5 | Sodium___ | 37.4 | U | | P_ |
| 7440-28-0 | Thallium_ | 0.97 | U | W | F_ |
| 7440-62-2 | Vanadium_ | 3.4 | U | N | P_ |
| 7440-66-6 | Zinc____ | 1930 | | | P_ |
| _____ | Cyanide__ | 2.4 | U | N | C_ |
| | | | | | |

Color Before: BROWN____ Clarity Before: _____ Texture: MEDIUM

Color After: BLUE_____ Clarity After: _____ Artifacts: _____

Comments:

FORM I - IN

7/88

1

INORGANIC ANALYSES DATA SHEET

EPA SAMPLE NO.

MEKS59

Lab Name: BETZ_LABS_THE_WOODLANDS__ Contract: 68-D9-0083

Lab Code: BETZ__ Case No.: 14906 SAS No.: _____ SDG No.: MEKS56

Matrix (soil/water): SOIL_ Lab Sample ID: MEKS59____

Level (low/med): LOW__ Date Received: 09/19/90

% Solids: _38.6

Concentration Units (ug/L or mg/kg dry weight): MG/KG

| CAS No. | Analyte | Concentration | C | Q | M |
|---|---|---|---|---|---|
| 7429-90-5 | Aluminum_ | 18200 | | | P_ |
| 7440-36-0 | Antimony_ | 385 | | N | P_ |
| 7440-38-2 | Arsenic__ | 23.1 | | SN | F_ |
| 7440-39-3 | Barium___ | 217 | | | P_ |
| 7440-41-7 | Beryllium | 0.98 | B | | P_ |
| 7440-43-9 | Cadmium__ | 20.9 | | | P_ |
| 7440-70-2 | Calcium__ | 176000 | | * | P_ |
| 7440-47-3 | Chromium_ | 34500 | | | P_ |
| 7440-48-4 | Cobalt___ | 26.3 | | | P_ |
| 7440-50-8 | Copper___ | 12800 | | | P_ |
| 7439-89-6 | Iron____ | 6810 | | | P_ |
| 7439-92-1 | Lead____ | 117 | | * | F_ |
| 7439-95-4 | Magnesium | 3680 | | | P_ |
| 7439-96-5 | Manganese | 89.2 | | N* | P_ |
| 7439-97-6 | Mercury__ | 0.45 | | N | CV |
| 7440-02-0 | Nickel___ | 24300 | | | P_ |
| 7440-09-7 | Potassium | 498 | B | | P_ |
| 7782-49-2 | Selenium_ | 3.2 | | | F_ |
| 7440-22-4 | Silver___ | 7.1 | | N | P_ |
| 7440-23-5 | Sodium___ | 39.9 | U | | P_ |
| 7440-28-0 | Thallium_ | 1.0 | U | | F_ |
| 7440-62-2 | Vanadium_ | 3.6 | U | N | P_ |
| 7440-66-6 | Zinc____ | 3790 | | | P_ |
| _____ | Cyanide__ | 143 | | N | C_ |
| _____ | _____ | _____ | | _____ | __ |

Color Before: BLUE_____ Clarity Before: _____ Texture: MEDIUM

Color After: BLUE_____ Clarity After: _____ Artifacts: _____

Comments:

1

INORGANIC ANALYSES DATA SHEET

EPA SAMPLE NO.

MEKS60

Lab Name: BETZ_LABS_THE_WOODLANDS__ Contract: 68-D9-0083

Lab Code: BETZ__ Case No.: 14906 SAS No.: _____ SDG No.: MEKS56

Matrix (soil/water): SOIL_ Lab Sample ID: MEKS60____

Level (low/med): LOW__ Date Received: 09/19/90

% Solids: _85.2

Concentration Units (ug/L or mg/kg dry weight): MG/KG

| CAS No. | Analyte | Concentration | C | Q | M |
|---|---|---|---|---|---|
| 7429-90-5 | Aluminum_ | 13700 | | | P_ |
| 7440-36-0 | Antimony_ | 11.7 | U | N | P_ |
| 7440-38-2 | Arsenic__ | 3.9 | | N | F_ |
| 7440-39-3 | Barium___ | 122 | | | P_ |
| 7440-41-7 | Beryllium | 1.2 | | | P_ |
| 7440-43-9 | Cadmium__ | 4.8 | | | P_ |
| 7440-70-2 | Calcium__ | 40500 | | * | P_ |
| 7440-47-3 | Chromium_ | 671 | | | P_ |
| 7440-48-4 | Cobalt___ | 8.2 | B | | P_ |
| 7440-50-8 | Copper___ | 216 | | | P_ |
| 7439-89-6 | Iron____ | 29300 | | | P_ |
| 7439-92-1 | Lead____ | 7.7 | | * | F_ |
| 7439-95-4 | Magnesium | 9180 | | | P_ |
| 7439-96-5 | Manganese | 2810 | | N* | P_ |
| 7439-97-6 | Mercury__ | 0.11 | U | N | CV |
| 7440-02-0 | Nickel___ | 669 | | | P_ |
| 7440-09-7 | Potassium | 1650 | | | P_ |
| 7782-49-2 | Selenium_ | 0.33 | B | W | F_ |
| 7440-22-4 | Silver___ | 1.4 | U | N | P_ |
| 7440-23-5 | Sodium___ | 114 | B | | P_ |
| 7440-28-0 | Thallium_ | 0.47 | U | | F_ |
| 7440-62-2 | Vanadium_ | 38.8 | | N | P_ |
| 7440-66-6 | Zinc____ | 1010 | | | P_ |
| | Cyanide__ | 1.2 | U | N | C_ |

Color Before: BROWN____ Clarity Before: _____ Texture: MEDIUM

Color After: BLUE_____ Clarity After: _____ Artifacts: _____

Comments:

U.S. EPA - CLP

1

INORGANIC ANALYSES DATA SHEET

EPA SAMPLE NO.

MEKS61

Lab Name: BETZ_LABS_THE_WOODLANDS__ Contract: 68-D9-0083

Lab Code: BETZ__ Case No.: 14906 SAS No.: _____ SDG No.: MEKS56

Matrix (soil/water): SOIL_ Lab Sample ID: MEKS61____

Level (low/med): LOW__ Date Received: 09/19/90

% Solids: _84.3

Concentration Units (ug/L or mg/kg dry weight): MG/KG

| CAS No. | Analyte | Concentration | C | Q | M |
|---|---|---|---|---|---|
| 7429-90-5 | Aluminum_ | 17400 | | | P_ |
| 7440-36-0 | Antimony_ | 11.9 | U | N | P_ |
| 7440-38-2 | Arsenic__ | 5.8 | | N | F_ |
| 7440-39-3 | Barium___ | 119 | | | P_ |
| 7440-41-7 | Beryllium | 1.00 | B | | P_ |
| 7440-43-9 | Cadmium__ | 3.8 | | | P_ |
| 7440-70-2 | Calcium__ | 15500 | | * | P_ |
| 7440-47-3 | Chromium_ | 51.8 | | | P_ |
| 7440-48-4 | Cobalt___ | 9.4 | B | | P_ |
| 7440-50-8 | Copper___ | 31.5 | | | P_ |
| 7439-89-6 | Iron____ | 25200 | | | P_ |
| 7439-92-1 | Lead____ | 15.2 | | S* | F_ |
| 7439-95-4 | Magnesium | 5580 | | | P_ |
| 7439-96-5 | Manganese | 705 | | N* | P_ |
| 7439-97-6 | Mercury__ | 0.11 | U | N | CV |
| 7440-02-0 | Nickel___ | 38.4 | | | P_ |
| 7440-09-7 | Potassium | 1790 | | | P_ |
| 7782-49-2 | Selenium_ | 0.42 | B | | F_ |
| 7440-22-4 | Silver___ | 1.4 | U | N | P_ |
| 7440-23-5 | Sodium___ | 35.3 | B | | P_ |
| 7440-28-0 | Thallium_ | 0.47 | U | | F_ |
| 7440-62-2 | Vanadium_ | 38.2 | | N | P_ |
| 7440-66-6 | Zinc____ | 115 | | | P_ |
| _____ | Cyanide__ | 1.2 | U | N | C_ |
| _____ | _____ | _____ | | | __ |

Color Before: BROWN____ Clarity Before: _____ Texture: MEDIUM

Color After: BLUE_____ Clarity After: _____ Artifacts: _____

Comments:

FORM I - IN

7/88

U.S. EPA - CLP

1

INORGANIC ANALYSES DATA SHEET

EPA SAMPLE NO.

MEKS62

Lab Name: BETZ_LABS_THE_WOODLANDS__ Contract: 68-D9-0083

Lab Code: BETZ__ Case No.: 14906 SAS No.: _____ SDG No.: MEKS56

Matrix (soil/water): SOIL_ Lab Sample ID: MEKS62____

Level (low/med): LOW__ Date Received: 09/19/90

% Solids: _80.0

Concentration Units (ug/L or mg/kg dry weight): MG/KG

| CAS No. | Analyte | Concentration | C | Q | M |
|---|---|---|---|---|---|
| 7429-90-5 | Aluminum_ | 15800 | | | P_ |
| 7440-36-0 | Antimony_ | 12.5 | U | N | P_ |
| 7440-38-2 | Arsenic__ | 10.4 | | N | F_ |
| 7440-39-3 | Barium___ | 75.7 | | | P_ |
| 7440-41-7 | Beryllium | 0.75 | B | | P_ |
| 7440-43-9 | Cadmium__ | 3.6 | | | P_ |
| 7440-70-2 | Calcium__ | 1210 | B | * | P_ |
| 7440-47-3 | Chromium_ | 21.8 | | | P_ |
| 7440-48-4 | Cobalt___ | 8.9 | B | | P_ |
| 7440-50-8 | Copper___ | 9.5 | | | P_ |
| 7439-89-6 | Iron_____ | 26200 | | | P_ |
| 7439-92-1 | Lead_____ | 24.9 | | * | F_ |
| 7439-95-4 | Magnesium | 2530 | | | P_ |
| 7439-96-5 | Manganese | 320 | | N* | P_ |
| 7439-97-6 | Mercury__ | 0.12 | U | N | CV |
| 7440-02-0 | Nickel___ | 15.9 | | | P_ |
| 7440-09-7 | Potassium | 1570 | | | P_ |
| 7782-49-2 | Selenium_ | 0.54 | B | | F_ |
| 7440-22-4 | Silver___ | 1.5 | U | N | P_ |
| 7440-23-5 | Sodium___ | 19.2 | U | | P_ |
| 7440-28-0 | Thallium_ | 0.50 | U | W | F_ |
| 7440-62-2 | Vanadium_ | 34.5 | | N | P_ |
| 7440-66-6 | Zinc_____ | 81.9 | | | P_ |
| _____ | Cyanide__ | 1.3 | U | N | C_ |
| | | | | | |

Color Before: BROWN____ Clarity Before: _____ Texture: MEDIUM

Color After: BLUE_____ Clarity After: _____ Artifacts: _____

Comments:

FORM I - IN

7/88

3
BLANKS

Lab Name: BETZ_LABS_THE_WOODLANDS__ Contract: 68-D9-0083

Lab Code: BETZ__ Case No.: 14906 SAS No.: _____ SDG No.: MEKS56

Preparation Blank Matrix (soil/water): SOIL_

Preparation Blank Concentration Units (ug/L or mg/kg): MG/KG

| Analyte | Initial Calib. Blank (ug/L) | C | Continuing Calibration Blank (ug/L) 1 | C | 2 | C | 3 | C | Prepa-ration Blank | C | M |
|---|---|---|---|---|---|---|---|---|---|---|---|
| Aluminum | 69.0 | U | 69.0 | U | 69.0 | U | 69.0 | U | 13.800 | U | P |
| Antimony | 50.0 | U | 50.0 | U | 50.0 | U | 50.0 | U | 10.000 | U | P |
| Arsenic | 4.0 | U | 4.0 | U | 4.0 | U | 4.0 | U | 0.800 | U | F |
| Barium | 4.0 | U | 4.0 | U | 4.0 | U | 4.0 | U | 0.800 | U | P |
| Beryllium | 1.0 | U | 1.0 | U | 1.0 | U | 1.0 | U | 0.200 | U | P |
| Cadmium | 5.0 | U | 5.0 | U | 5.0 | U | 5.0 | U | 1.000 | U | P |
| Calcium | 91.0 | U | 91.0 | U | 91.0 | U | 91.0 | U | 18.200 | U | P |
| Chromium | 7.0 | U | 7.0 | U | 7.0 | U | 7.0 | U | 1.400 | U | P |
| Cobalt | 12.0 | U | 12.0 | U | 12.0 | U | 12.0 | U | 2.400 | U | P |
| Copper | 5.0 | U | 5.0 | U | 5.0 | U | 5.0 | U | 1.000 | U | P |
| Iron | 8.0 | U | 8.0 | U | 8.0 | U | 8.0 | U | 1.600 | U | P |
| Lead | 3.0 | U | 3.0 | U | 3.0 | U | 3.0 | U | 0.600 | U | F |
| Magnesium | 141.0 | U | 141.0 | U | 141.0 | U | 141.0 | U | 28.200 | U | P |
| Manganese | 2.0 | U | 2.0 | U | 2.0 | U | 2.0 | U | 0.400 | U | P |
| Mercury | 0.2 | U | 0.2 | U | 0.2 | U | | | 0.100 | U | CV |
| Nickel | 15.0 | U | 15.0 | U | 15.0 | U | 15.0 | U | 3.000 | U | P |
| Potassium | 136.0 | U | -240.4 | B | -325.1 | B | -319.0 | B | -28.500 | B | P |
| Selenium | 1.0 | U | 1.0 | U | 1.0 | U | | | 0.200 | U | F |
| Silver | 6.0 | U | 6.0 | U | 6.0 | U | 6.0 | U | 1.200 | U | P |
| Sodium | 77.0 | U | -845.1 | B | -986.7 | B | -876.6 | B | -99.200 | B | P |
| Thallium | 2.0 | U | 2.0 | U | 2.0 | U | 2.0 | U | 0.400 | U | F |
| Vanadium | 7.0 | U | 7.0 | U | 7.0 | U | 7.0 | U | 1.400 | U | P |
| Zinc | 7.0 | U | 7.0 | U | 7.0 | U | 7.0 | U | 1.400 | U | P |
| Cyanide | 20.0 | U | 20.0 | U | 20.0 | U | 20.0 | U | 1.000 | U | C |

3
BLANKS

Lab Name: BETZ_LABS_THE_WOODLANDS__ Contract: 68-D9-0083

Lab Code: BETZ__ Case No.: 14906 SAS No.: _____ SDG No.: MEKS56

Preparation Blank Matrix (soil/water): SOIL_

Preparation Blank Concentration Units (ug/L or mg/kg): MG/KG

| Analyte | Initial Calib. Blank (ug/L) | C | Continuing Calibration Blank (ug/L) 1 | C | 2 | C | 3 | C | Prepa-ration Blank | C | M |
|---|---|---|---|---|---|---|---|---|---|---|---|
| Aluminum | | | | | | | | | | | NR |
| Antimony | 50.0 | U | 50.0 | U | 50.0 | U | 50.0 | U | | | P |
| Arsenic | 4.0 | U | 4.0 | U | 4.0 | U | | | | | F |
| Barium | | | | | | | | | | | NR |
| Beryllium | | | | | | | | | | | NR |
| Cadmium | | | | | | | | | | | NR |
| Calcium | | | | | | | | | | | NR |
| Chromium | 7.0 | U | 7.0 | U | 7.0 | U | | | | | P |
| Cobalt | | | | | | | | | | | NR |
| Copper | | | | | | | | | | | NR |
| Iron | | | | | | | | | | | NR |
| Lead | | | 3.0 | U | 3.0 | U | 3.0 | U | | | F |
| Magnesium | | | | | | | | | | | NR |
| Manganese | 2.0 | U | 2.0 | U | 2.0 | U | 2.0 | U | | | P |
| Mercury | | | | | | | | | | | NR |
| Nickel | 15.0 | U | 15.0 | U | 15.0 | U | | | | | P |
| Potassium | | | | | | | | | | | NR |
| Selenium | 1.0 | U | 1.0 | U | 1.0 | U | | | | | F |
| Silver | | | | | | | | | | | NR |
| Sodium | | | | | | | | | | | NR |
| Thallium | | | | | | | | | | | NR |
| Vanadium | 7.0 | U | 7.0 | U | 7.0 | U | 7.0 | U | | | P |
| Zinc | | | | | | | | | | | NR |
| Cyanide | | | 20.0 | U | 20.0 | U | | | 1.000 | U | C |

Lab Name: BETZ_LABS_THE_WOODLANDS__ Contract: 68-D9-0083

Lab Code: BETZ__ Case No.: 14906 SAS No.: _____ SDG No.: MEKS56

Preparation Blank Matrix (soil/water): SOIL_

Preparation Blank Concentration Units (ug/L or mg/kg): MG/KG

| Analyte | Initial Calib. Blank (ug/L) | C | Continuing Calibration Blank (ug/L) 1 | C | 2 | C | 3 | C | Prepa-ration Blank | C | M |
|---|---|---|---|---|---|---|---|---|---|---|---|
| Aluminum | | | | | | | | | | | NR |
| Antimony | | | 50.0 | U | | | | | | | P |
| Arsenic | | | | | | | | | | | NR |
| Barium | | | | | | | | | | | NR |
| Beryllium | | | | | | | | | | | NR |
| Cadmium | | | | | | | | | | | NR |
| Calcium | | | | | | | | | | | NR |
| Chromium | | | | | | | | | | | NR |
| Cobalt | | | | | | | | | | | NR |
| Copper | | | | | | | | | | | NR |
| Iron | | | | | | | | | | | NR |
| Lead | | | 3.0 | U | 3.0 | U | | | | | F |
| Magnesium | | | | | | | | | | | NR |
| Manganese | | | 2.0 | U | | | | | | | P |
| Mercury | | | | | | | | | | | NR |
| Nickel | | | | | | | | | | | NR |
| Potassium | | | | | | | | | | | NR |
| Selenium | | | | | | | | | | | NR |
| Silver | | | | | | | | | | | NR |
| Sodium | | | | | | | | | | | NR |
| Thallium | | | | | | | | | | | NR |
| Vanadium | | | 7.0 | U | | | | | | | P |
| Zinc | | | | | | | | | | | NR |
| Cyanide | 20.0 | U | 20.0 | U | 20.0 | U | | | 1.000 | U | C |

Replaces 028

U.S. EPA - CLP

3
BLANKS

Lab name: BETZ LABS THE WOODLANDS Contract: 68-D9-0083

Lab code: BETZ Case No.: 14906 SAS No.: SDG No.: MEKS56

Preparation Blank Matrix (soil/water):

Preparation Blank Concentration Units (ug/L or mg/kg):

| Analyte | Initial Calib. Blank (ug/L) | C | Continuing Calibration Blank (ug/L) 1 | C | 2 | C | 3 | C | Prepa-ration Blank | C | M |
|---|---|---|---|---|---|---|---|---|---|---|---|
| Aluminum | | | | | | | | | | | NR |
| Antimony | | | | | | | | | | | NR |
| Arsenic | | | | | | | | | | | NR |
| Barium | | | | | | | | | | | NR |
| Beryllium | | | | | | | | | | | NR |
| Cadmium | | | | | | | | | | | NR |
| Calcium | | | | | | | | | | | NR |
| Chromium | | | | | | | | | | | NR |
| Cobalt | | | | | | | | | | | NR |
| Copper | | | | | | | | | | | NR |
| Iron | | | | | | | | | | | NR |
| Lead | | | | | | | | | | | NR |
| Magnesium | | | | | | | | | | | NR |
| Manganese | 2.0 | U | 2.0 | U | | | | | | | P |
| Mercury | | | | | | | | | | | NR |
| Nickel | | | | | | | | | | | NR |
| Potassium | | | | | | | | | | | NR |
| Selenium | | | | | | | | | | | NR |
| Silver | | | | | | | | | | | NR |
| Sodium | | | | | | | | | | | NR |
| Thallium | | | | | | | | | | | NR |
| Vanadium | 7.0 | U | 7.0 | U | 7.0 | U | 7.0 | U | | | P |
| Zinc | | | | | | | | | | | NR |
| Cyanide | | | | | | | | | | | NR |

FORM III - IN

U.S. EPA - CLP

5A
SPIKE SAMPLE RECOVERY

EPA SAMPLE NO.

Lab Name: BETZ_LABS_THE_WOODLANDS__ Contract:68-D9-0083 MEKS56S

Lab Code: BETZ__ Case No.: 14906 SAS No.: _____ SDG No.: MEKS56

Matrix: __SOIL_____ Level (low/med): _LOW____

% Solids for Sample: _60.4

Concentration Units (ug/L or mg/kg dry weight): MG/KG

| Analyte | Control Limit %R | Spiked Sample Result (SSR) | C | Sample Result (SR) | C | Spike Added (SA) | %R | Q | M |
|---|---|---|---|---|---|---|---|---|---|
| Aluminum | | | | | | | | | NR |
| Antimony | 75-125 | 272.7483 | | 252.5166 | | 165.56 | 12.2 | N | P |
| Arsenic | 75-125 | 27.5364 | | 21.9000 | | 13.25 | 42.5 | N | F |
| Barium | 75-125 | 838.7748 | | 169.1060 | | 662.25 | 101.1 | | P |
| Beryllium | 75-125 | 17.0861 | | 1.2252 | B | 16.56 | 95.8 | | P |
| Cadmium | 75-125 | 26.3576 | | 10.6291 | | 16.56 | 95.0 | | P |
| Calcium | | | | | | | | | NR |
| Chromium | | 17288.7417 | | 22084.1060 | | 66.23 | -7240.5 | | P |
| Cobalt | 75-125 | 192.8477 | | 36.4901 | | 165.56 | 94.4 | | P |
| Copper | | 3850.0331 | | 4367.6159 | | 82.78 | -625.3 | | P |
| Iron | | | | | | | | | NR |
| Lead | | 423.4437 | | 173.8411 | | 6.62 | 3770.4 | | F |
| Magnesium | | | | | | | | | NR |
| Manganese | 75-125 | 861.5894 | | 396.7550 | | 165.56 | 280.8 | N | P |
| Mercury | 75-125 | 1.4743 | | 0.4100 | | 0.79 | 134.7 | N | CV |
| Nickel | | 7830.1325 | | 9581.4570 | | 165.56 | -1057.8 | | P |
| Potassium | | | | | | | | | NR |
| Selenium | 75-125 | 4.8874 | | 1.3411 | B | 3.31 | 107.1 | | F |
| Silver | 75-125 | 1.9868 | U | 1.9868 | U | 16.56 | 0.0 | N | P |
| Sodium | | | | | | | | | NR |
| Thallium | 75-125 | 19.1921 | | 0.6623 | U | 16.56 | 115.9 | | F |
| Vanadium | 75-125 | 111.9536 | | 2.3179 | U | 165.56 | 67.6 | N | P |
| Zinc | | 2897.8477 | | 3358.3113 | | 165.56 | -278.1 | | P |
| Cyanide | 75-125 | 55.0750 | | 30.6488 | | 8.34 | 292.9 | N | C |

Comments:

Replace page 034

U.S. EPA - CLP

5B
POST DIGEST SPIKE SAMPLE RECOVERY

EPA SAMPLE NO.

MEKS56A

Lab Name: BETZ LABS THE WOODLANDS Contract: 68-D9-0083

Lab Code: BETZ Case No.: 14906 SAS No.: SDG No.: MEKS56

Matrix: SOIL Level (low/med): LOW

Concentration Units: ug/L

| Analyte | Control Limit %R | Spiked Sample Result (SSR) | C | Sample Result (SR) | C | Spike Added (SA) | %R | Q | M |
|---|---|---|---|---|---|---|---|---|---|
| Aluminum | | | | | | | | | NR |
| Antimony | | 2107.60 | | 762.60 | | 1500.0 | 89.7 | | P |
| Arsenic | | | | | | | | | NR |
| Barium | | | | | | | | | NR |
| Beryllium | | | | | | | | | NR |
| Cadmium | | | | | | | | | NR |
| Calcium | | | | | | | | | NR |
| Chromium | | | | | | | | | NR |
| Cobalt | | | | | | | | | NR |
| Copper | | | | | | | | | NR |
| Iron | | | | | | | | | NR |
| Lead | | | | | | | | | NR |
| Magnesium | | | | | | | | | NR |
| Manganese | | 3181.80 | | 1198.20 | | 2200.0 | 90.2 | | P |
| Mercury | | | | | | | | | NR |
| Nickel | | | | | | | | | NR |
| Potassium | | | | | | | | | NR |
| Selenium | | | | | | | | | NR |
| Silver | | | | | | | | | NR |
| Sodium | | | | | | | | | NR |
| Thallium | | | | | | | | | NR |
| Vanadium | | 7.00 | U | 7.00 | U | 100.0 | 0.0 | | P |
| Zinc | | | | | | | | | NR |
| Cyanide | | 1517.57 | | 367.28 | | 40.4 | 2874.3 | | C |

Comments:

U.S. EPA - CLP

6
DUPLICATES

EPA SAMPLE NO.

MEKS56D

Lab Name: BETZ LABS THE WOODLANDS Contract: 68-D9-0083

Lab Code: BETZ Case No.: 14906 SAS No.: SDG No.: MEKS56

Matrix (water/soil): SOIL Level (low/med): LOW

% Solids for Sample: 60.4 % Solids for Duplicate: 60.8

Concentration Units (ug/L or mg/kg dry weight): MG/KG

| Analyte | Control Limit | Sample (S) | C | Duplicate (D) | C | %RPD | Q | M |
|---|---|---|---|---|---|---|---|---|
| Aluminum | | 11105.2318 | | 13151.0265 | | 16.9 | | P |
| Antimony | | 252.5166 | | 235.1656 | | 7.1 | | P |
| Arsenic | | 21.9000 | | 21.9040 | | 0.0 | | F |
| Barium | 66.2 | 169.1060 | | 162.7815 | | 3.8 | | P |
| Beryllium | | 1.2252 | B | 1.2252 | B | 0.0 | | P |
| Cadmium | | 10.6291 | | 10.1325 | | 4.8 | | P |
| Calcium | | 55562.6490 | | 39475.2649 | | 33.9 | * | P |
| Chromium | | 22084.1060 | | 19985.7616 | | 10.0 | | P |
| Cobalt | 16.6 | 36.4901 | | 40.6623 | | 10.8 | | P |
| Copper | | 4367.6159 | | 4169.8675 | | 4.6 | | P |
| Iron | | 23580.3974 | | 24428.7417 | | 3.5 | | P |
| Lead | | 173.8411 | | 305.9603 | | 55.1 | * | F |
| Magnesium | 1655.6 | 4856.9868 | | 4948.8411 | | 1.9 | | P |
| Manganese | | 396.7550 | | 607.1854 | | 41.9 | * | P |
| Mercury | .2 | .4100 | | .4100 | | 0.0 | | CV |
| Nickel | | 9581.4570 | | 8637.4172 | | 10.4 | | P |
| Potassium | 1655.6 | 1623.0464 | B | 1993.0795 | | 20.5 | | P |
| Selenium | | 1.3411 | B | 1.5530 | B | 14.6 | | F |
| Silver | | 1.9868 | U | 1.9868 | U | | | P |
| Sodium | | 57.6159 | B | 52.7483 | B | 8.8 | | P |
| Thallium | | .6623 | U | .8212 | B | 200.0 | | F |
| Vanadium | | 2.3179 | U | 2.3179 | U | | | P |
| Zinc | | 3358.3113 | | 3049.0397 | | 9.7 | | P |
| Cyanide | | 30.6488 | | 34.2568 | | 11.1 | | C |

10

Instrument Detection Limits (Quarterly)

Lab Name: BETZ_LABS_THE_WOODLANDS__ Contract: 68-D9-0083

Lab Code: BETZ__ Case No.: 14906 SAS No.: _____ SDG No.: MEKS56

ICP ID Number: #1_BAIRD____ Date: 07/17/90

Flame AA ID Number : _____

Furnace AA ID Number : _____

| Analyte | Wave-length (nm) | Back-ground | CRDL (ug/L) | IDL (ug/L) | M |
|---|---|---|---|---|---|
| Aluminum | 308.00 | | 200 | 69.0 | P |
| Antimony | 206.83 | | 60 | 50.0 | P |
| Arsenic | | | 10 | | NR |
| Barium | 493.41 | | 200 | 4.0 | P |
| Beryllium | 313.04 | | 5 | 1.0 | P |
| Cadmium | 226.50 | | 5 | 5.0 | P |
| Calcium | 317.93 | | 5000 | 91.0 | P |
| Chromium | 267.71 | | 10 | 7.0 | P |
| Cobalt | 228.62 | | 50 | 12.0 | P |
| Copper | 324.75 | | 25 | 5.0 | P |
| Iron | 259.94 | | 100 | 8.0 | P |
| Lead | | | 3 | | NR |
| Magnesium | 293.68 | | 5000 | 141.0 | P |
| Manganese | 257.61 | | 15 | 2.0 | P |
| Mercury | | | 0.2 | | NR |
| Nickel | 231.60 | | 40 | 15.0 | P |
| Potassium | 766.49 | | 5000 | 136.0 | P |
| Selenium | | | 5 | | NR |
| Silver | 328.07 | | 10 | 6.0 | P |
| Sodium | 589.59 | | 5000 | 77.0 | P |
| Thallium | | | 10 | | NR |
| Vanadium | 292.40 | | 50 | 7.0 | P |
| Zinc | 213.86 | | 20 | 7.0 | P |

Comments:

10

Instrument Detection Limits (Quarterly)

Lab Name: BETZ_LABS_THE_WOODLANDS__ Contract: 68-D9-0083

Lab Code: BETZ__ Case No.: 14906 SAS No.: _____ SDG No.: MEKS56

ICP ID Number: _____ Date: 07/17/90

Flame AA ID Number : AAS6488_____

Furnace AA ID Number : AAS6488_____

| Analyte | Wave-length (nm) | Back-ground | CRDL (ug/L) | IDL (ug/L) | M |
|---|---|---|---|---|---|
| Aluminum | | | 200 | | NR |
| Antimony | | | 60 | | NR |
| Arsenic | 197.20 | BZ | 10 | 4.0 | F |
| Barium | | | 200 | | NR |
| Beryllium | | | 5 | | NR |
| Cadmium | | | 5 | | NR |
| Calcium | | | 5000 | | NR |
| Chromium | | | 10 | | NR |
| Cobalt | | | 50 | | NR |
| Copper | | | 25 | | NR |
| Iron | | | 100 | | NR |
| Lead | 283.30 | BZ | 3 | 3.0 | F |
| Magnesium | | | 5000 | | NR |
| Manganese | | | 15 | | NR |
| Mercury | 253.70 | | 0.2 | 0.2 | CV |
| Nickel | | | 40 | | NR |
| Potassium | | | 5000 | | NR |
| Selenium | 196.00 | BZ | 5 | 1.0 | F |
| Silver | | | 10 | | NR |
| Sodium | | | 5000 | | NR |
| Thallium | 276.80 | BZ | 10 | 2.0 | F |
| Vanadium | | | 50 | | NR |
| Zinc | | | 20 | | NR |
| | | | | | |

Comments:

is page ~~039A~~ 040A

U.S. EPA - CLP

10

INSTRUMENT DETECTION LIMITS (QUARTERLY)

Lab Name: BETZ LABS THE WOODLANDS Contract: 68-D9-0083

Lab Code: BETZ Case No.: 14906 SAS No.: SDG No.: MEKS56

ICP ID Number: #1 BAIRD Date: 10/15/90

Flame AA ID Number:

Furnace AA ID Number:

| Analyte | Wave-length (nm) | Back ground | CRDL (ug/L) | IDL (ug/L) | M |
|---|---|---|---|---|---|
| Aluminum | | | 200 | | NR |
| Antimony | | | 60 | | NR |
| Arsenic | | | 10 | | NR |
| Barium | | | 200 | | NR |
| Beryllium | | | 5 | | NR |
| Cadmium | | | 5 | | NR |
| Calcium | | | 5000 | | NR |
| Chromium | | | 10 | | NR |
| Cobalt | | | 50 | | NR |
| Copper | | | 25 | | NR |
| Iron | | | 100 | | NR |
| Lead | | | 3 | | NR |
| Magnesium | | | 5000 | | NR |
| Manganese | | | 15 | | NR |
| Mercury | | | 0.2 | | NR |
| Nickel | | | 40 | | NR |
| Potassium | | | 5000 | | NR |
| Selenium | | | 5 | | NR |
| Silver | | | 10 | | NR |
| Sodium | | | 5000 | | NR |
| Thallium | | | 10 | | NR |
| Vanadium | 292.40 | | 50 | 3.0 | P |
| Zinc | | | 20 | | NR |

Comments:

Table 4 (Cont.)

| COMPOUND QUALIFIERS | DEFINITION | INTERPRETATION |
|---|---|---|
| U | Indicates compound was analyzed for but not detected. | Compound was not detected at or above the CRDL. |
| J | Indicates an estimated value. | Compound value may be semiquantitative. |
| UJ | Quantitation limit is estimated due to a quality control (QC) protocol. | Compound was not detected if value is at CRQL, e.g., 10U UJ. If a value is reported with a UJ above CRQL and it is <5x blank concentration (10x for common laboratory artifacts), the compound is detected but may be a laboratory artifact and not attributable to the sample. |
| C | This flag applies to pesticide results where the identification has been confirmed by GC/MS. Single component pesticides ≥10 ng/µL in the final extract shall be confirmed by GC/MS. | Compound was confirmed by GC/MS and is quantitative. Use pesticide/PCB listed value. |
| B | This flag is used when the compound is found in the associated blank as well as in the sample. It indicates possible/probable blank contamination and warns the data user to take appropriate action. | Compound value may be semiquantitative if it is <5x the blank concentration (<10x the blank concentrations for common laboratory artifacts: phthalates, methylene chloride, acetone, toluene, 2-butanone). |
| E | This flag identifies compounds whose concentrations exceed the calibration range of the GC/MS instrument for that specific analysis. This flag will <u>not</u> apply to pesticides/PCBs analyzed by GC/EC methods. | Compound value may be semiquantitative. There should be another analysis with a D qualifier, which is to be used. |
| D | This flag identifies all compounds identified in an analysis at a secondary dilution factor. | Alerts data user to a possible change in the CRQL. Data is quantitative. |
| A | This flag indicates that a TIC is a suspected aldol-condensation product. | Alerts data user of a laboratory artifact in the TICs only. |
| R | Results are unusable due to a major violation of QC protocol. | Compound value is not usable. |

| ANALYTE QUALIFIERS | | DEFINITION | INTERPRETATION |
|---|---|---|---|
| E | E | Estimated or not reported due to interference. See laboratory narrative. | Analyte or element was not detected, or value may be semiquantitative. |
| S | S | Analysis by Method of Standard Additions. | Value is quantitative. |
| N | N | Spike recoveries outside QC protocols, which indicates a possible matrix problem. Data may be biased high or low. See spike results and laboratory narrative. | Value may be quantitative or semi-quantitative. |
| * | * | Duplicate value outside QC protocols which indicates a possible matrix problem. | Value may be quantitative or semiquantitative. |
| + | + | Correlation coefficient for standard additions is less than 0.995. See review and laboratory narrative. | Data value may be biased. |
| [ ] | B | Value is real, but is above instrument DL and below CRDL. | Value may be quantitative or semi-quantitative. |
| UJ | | DL is estimated because of a QC protocol. DL is possibly above or below CRDL. | Compound or element was not detected. |
| J | | Value is above CRDL and is an estimated value because of a QC protocol. | Value may be semiquantitative.. |
| U | U | Compound was analyzed for but not detected. | Compound was not detected at or above the CRDL. |
| | N | Duplicate injection precision not met. | Value may be semiquantitative. |
| | W | Post-digestion spike for furnace AA analysis is out of control limits (35-115%), while sample absorbance is <50% of spike absorbance. | Value may be semiquantitative. |
| | R | Results are unusable due to a major violation of QC protocols. | Analyte value is not usable. |

Source: Ecology and Environment, Inc. 1989.

ecology and environment, inc.

111 WEST JACKSON BLVD., CHICAGO, ILLINOIS 60604, TEL. 312-663-9415

International Specialists in the Environment

CRL Receipt Date 10/23/90 FIT Receipt Date 12/04/90 Review Completed 12/04/90

TO: C. Schultz

FROM: C. Kourik

SUBJECT: GMC Fisher Body Div.

PAN: OH03315B (1 hour charged for review) Case # 14906

Sample Description

| Organics (VOA, ABN, Pest/PCB) | | Inorganics (Metals, Cyanide) | |
|---|---|---|---|
| # | Low Soil | # 7 | Low Soil |
| | Low Water | | Low Water |
| | Drinking Water | | Drinking Water |
| | Other | | Other |

Project Data Status _____ Completed!!

X Incomplete, awaiting org low soil

FIT Data Review Findings:

***Check Data Sheets for Transcription Errors***

✓ Compounds were detected in sample(s); see enclosed sheet.

Book No. 9 Page No. _____ Date Sampled 9/18/90

0759:2

recycled paper

recycled paper

ecology and environment

11/13

UNITED STATES ENVIRONMENTAL PROTECTION AGENCY
REGION V

DATE: 11-30-90

12/04

SUBJECT: Review of Region V CLP Data Received for Review on OCTOBER 23, 1990

FROM: Curtis Ross, Director (5SCRL) Central Regional Laboratory Jay Thelper

TO: Data User: FIT

We have reviewed the data for the following case(s).

SITE NAME: GMC FISCHER BODY DIV (OH) SMO Case No. 14906

EPA Data Set No. _____ No. of Samples: 7 D.U./Activity Numbers 1

CRL No. _____

SMO Traffic No. MEKS56 - 62

CLP Laboratory: BETZ Hrs. Required for Review: 4.5 hrs. +1 hr. 11-28

Following are our findings.

The laboratory's portion of case 14906 contains 7 low level soil samples assayed for total metals and total cyanide. The following narrative lists the out of control audits and their possible effects on the data.

(( SEE NEXT PAGE ))

Jill Siegrist

( ) Data are acceptable for use.
(X) Data are acceptable for use with qualifications noted above.
( ) Data are preliminary - pending verification by Contractor Laboratory.
( ) Data are unacceptable.

cc: Dr. Alfred Haeberer/Joan Fisk/Gary Ward, EPA Support Services
Ross K. Robeson, EMSL-Las Vegas
Don Trees, CLP/Sample Management Office

SAMPLE DESCRIPTION

SITE NAME GMC FISCHER BODY DIVISION - ELYRIA PLANT

TOD# F05-9004-011

CASE NUMBER 14906

SAMPLE #/STATION LOCATION S1

LOCATION DESCRIPTION NA

SAMPLING DATE 9/18/90 SAMPLING TIME 1150

ORGANIC TRAFFIC NUMBER EKH 56

INORGANIC TRAFFIC NUMBER MEKS 56

| BOTTLE | ANALYSIS | TAG NUMBERS | LOT NUMBER |
|---|---|---|---|
| 120 ml. | VOA | 132351 | W0172013 |
| 120 ml. | VOA | 132352 | W0172013 |
| 8 oz. | ABN/PEST/PCB | 132353 | 0137013 |
| 8 oz. | METALS/CN- | 132354 | 0137013 |
| | | | |
| | | | |
| | | | |
| | | | |
| | | | |

PHYSICAL DESCRIPTION AT TIME OF COLLECTION: Brown and Blue Clay wet.

PHYSICAL CHANGES FROM TIME OF COLLECTION UNTIL SHIPMENT: NONE

INSTRUMENT READINGS NONE

pH

CONDUCTIVITY

TEMPERATURE

NA

SAMPLE DESCRIPTION

SITE NAME GMC FISCHER BODY DIVISION - ELYRIA PLANT

TDD# F05-9004-011

CASE NUMBER 14906

SAMPLE #/STATION LOCATION S2

LOCATION DESCRIPTION NA

SAMPLING DATE 9/18/90 SAMPLING TIME 12 45

ORGANIC TRAFFIC NUMBER EKH 57

INORGANIC TRAFFIC NUMBER MEKS 57

| BOTTLE | ANALYSIS | TAG NUMBERS | LOT NUMBER |
|---|---|---|---|
| 120 ml. | VOA | 132355 | W0172013 |
| 120 ml. | VOA | 132356 | W0172013 |
| 8 oz. | ABN/PEST/PCB | 132357 | 0137013 |
| 8 oz. | METALS/CN- | 132358 | 0137013 |
| | | | |
| | | | |
| | | | |
| | | | |
| | | | |

PHYSICAL DESCRIPTION AT TIME OF COLLECTION: Brown and Blue Clay wet.

PHYSICAL CHANGES FROM TIME OF COLLECTION UNTIL SHIPMENT: NONE

INSTRUMENT READINGS NONE

pH

CONDUCTIVITY

TEMPERATURE

NA

SAMPLE DESCRIPTION

SITE NAME GMC FISCHER BODY DIVISION - ELYRIA PLANT

TDD# F05-9004-011

CASE NUMBER 14906

SAMPLE #/STATION LOCATION S3

LOCATION DESCRIPTION NA

SAMPLING DATE 9/18/90 SAMPLING TIME 1355

ORGANIC TRAFFIC NUMBER EKH 58

INORGANIC TRAFFIC NUMBER MEKS 58

| BOTTLE | ANALYSIS | TAG NUMBERS | LOT NUMBER |
|---|---|---|---|
| 120 ml. | VOA | 132359 | W0172013 |
| 120 ml. | VOA | 132360 | W0172013 |
| 8 oz. | ABN/PEST/PCB | 132361 | 0137013 |
| 8 oz. | METALS/CN- | 132362 | 0137013 |
| | | | |
| | | | |
| | | | |
| | | | |
| | | | |

PHYSICAL DESCRIPTION AT TIME OF COLLECTION: Brown Soil and Clay, with a Blue substance.

PHYSICAL CHANGES FROM TIME OF COLLECTION UNTIL SHIPMENT: NONE

INSTRUMENT READINGS NONE

pH

CONDUCTIVITY

TEMPERATURE

N/A

SAMPLE DESCRIPTION

SITE NAME GMC FISCHER BODY DIVISION - ELYRIA PLANT

TDD# F05-9004-011

CASE NUMBER 14906

SAMPLE #/STATION LOCATION S 4

LOCATION DESCRIPTION NA

SAMPLING DATE 9/18/90 SAMPLING TIME 1435

ORGANIC TRAFFIC NUMBER EKH 59

INORGANIC TRAFFIC NUMBER MEKS 59

| BOTTLE | ANALYSIS | TAG NUMBERS | LOT NUMBER |
|---|---|---|---|
| 120 ml. | VOA | 132363 | W0172013 |
| 120 ml. | VOA | 132364 | W0172013 |
| 8 oz. | AON/PEST/PCB | 132365 | 0137013 |
| 8 oz. | METALS/CN- | 132366 | 0137013 |
| | | | |
| | | | |
| | | | |
| | | | |
| | | | |

PHYSICAL DESCRIPTION AT TIME OF COLLECTION: Bluish soil.

PHYSICAL CHANGES FROM TIME OF COLLECTION UNTIL SHIPMENT: NONE.

INSTRUMENT READINGS NONE.

pH

CONDUCTIVITY

TEMPERATURE

N/A

SAMPLE DESCRIPTION

SITE NAME GMC FISCHER BODY DIVISION - ELYRIA PLANT

TDD# F05-9004-011

CASE NUMBER 14906

SAMPLE #/STATION LOCATION S5

LOCATION DESCRIPTION NA

SAMPLING DATE 9/18/90 SAMPLING TIME 1515

ORGANIC TRAFFIC NUMBER EKH 60

INORGANIC TRAFFIC NUMBER MEKS 60

| BOTTLE | ANALYSIS | TAG NUMBERS | LOT NUMBER |
|---|---|---|---|
| 120 ml. | VOA | 132367 | W0172013 |
| 120 ml. | VOA | 132368 | W0172013 |
| 8 oz. | ABN/PEST/PCB | 132369 | 0137013 |
| 8 oz. | METALS/CN- | 132370 | 0137013 |
| | | | |
| | | | |
| | | | |
| | | | |
| | | | |

PHYSICAL DESCRIPTION AT TIME OF COLLECTION: Brown Soil with white specks.

PHYSICAL CHANGES FROM TIME OF COLLECTION UNTIL SHIPMENT: NONE.

INSTRUMENT READINGS NONE.

pH

CONDUCTIVITY

TEMPERATURE

NA

SAMPLE DESCRIPTION

SITE NAME GMC FISCHER BODY DIVISION - ELYRIA PLANT

TDD# F05-9004-011

CASE NUMBER 14906

SAMPLE #/STATION LOCATION S 6

LOCATION DESCRIPTION NA

SAMPLING DATE 9/18/90 SAMPLING TIME 1555

ORGANIC TRAFFIC NUMBER EKH 61

INORGANIC TRAFFIC NUMBER MEKS 61

| BOTTLE | ANALYSIS | TAG NUMBERS | LOT NUMBER |
|---|---|---|---|
| 120 ml. | VOA | 132371 | W0172013 |
| 120 ml. | VOA | 132372 | W0172013 |
| 8 oz. | ABN/PEST/PCB | 132373 | 0137013 |
| 8 oz. | METALS/CN- | 132374 | 0137013 |
| | | | |
| | | | |
| | | | |
| | | | |
| | | | |

PHYSICAL DESCRIPTION AT TIME OF COLLECTION: Brown Soil with White Specks.

PHYSICAL CHANGES FROM TIME OF COLLECTION UNTIL SHIPMENT: NONE.

INSTRUMENT READINGS NONE.

pH

CONDUCTIVITY

TEMPERATURE

N/A

SAMPLE DESCRIPTION

SITE NAME GMC FISCHER BODY DIVISION - ELYRIA PLANT

TDD# F05-9004-011

CASE NUMBER 14906

SAMPLE #/STATION LOCATION S 7

LOCATION DESCRIPTION NA

SAMPLING DATE 9/18/90 SAMPLING TIME 1630

ORGANIC TRAFFIC NUMBER EKH 62

INORGANIC TRAFFIC NUMBER MEKS 62

| BOTTLE | ANALYSIS | TAG NUMBERS | LOT NUMBER |
|---|---|---|---|
| 120 ml. | VOA | 132375 | WD172013 |
| 120 ml. | VOA | 132376 | WD172013 |
| 8 oz. | ABN/PEST/PCB | 132377 | D137013 |
| 8 oz. | METALS/CN- | 132378 | D137013 |
| | | | |
| | | | |
| | | | |
| | | | |
| | | | |

PHYSICAL DESCRIPTION AT TIME OF COLLECTION: Brown and Gray Clay.

PHYSICAL CHANGES FROM TIME OF COLLECTION UNTIL SHIPMENT: NONE.

INSTRUMENT READINGS NONE.

pH

CONDUCTIVITY

TEMPERATURE

N/A

ENVIRONMENTAL PROTECTION AGENCY
Office of Enforcement

REGION 5
230 South Dearborn Street
Chicago, Illinois 60604

# CHAIN OF CUSTODY RECORD

PROJ. NO.: F0H0331
PROJECT NAME: F05-9004-011 / CASE: 14906
SAMPLERS: (Signature) Randy Livingston

Cooler # 242

| STA. NO. | DATE | TIME | COMP. | GRAB | STATION LOCATION | NO. OF CONTAINERS | Agency Lab Sec VOA 12 oz | | | | | | REMARKS: TAG Number | Low Concen. MATRIX |
|---|---|---|---|---|---|---|---|---|---|---|---|---|---|---|
| EKH 56 | 9/18/90 | 1150 | | X | S1 | 3 | 1 | 2 | | | | | 132356-58 | Soil |
| EKH 57 | 9/18/90 | 1245 | | X | S2 | 3 | 1 | 2 | | | | | 132357-62 | Soil |
| EKH 58 | 9/18/90 | 1355 | | X | S3 | 3 | 1 | 2 | | | | | 132358-66 | Soil |
| EKH 59 | 9/18/90 | 1435 | | X | S4 | 3 | 1 | 2 | | | | | 132363-65 | Soil |
| EKH 60 | 9/18/90 | 1515 | | X | S5 | 3 | 1 | 2 | | | | | 132367-69 | Soil |
| EKH 61 | 9/18/90 | 1555 | | X | S6 | 3 | 1 | 2 | | | | | 132371-73 | Soil |
| EKH 62 | 9/18/90 | 1630 | | X | S7 | 3 | 1 | 2 | | | | | 132375-77 | Soil |

Lot # Sec 0137013
Lab: W0172013

SHIPMENT IS COMPLETE

(Rel. OTR ~~NEFR~~ w/ Cooler # 242)

| Relinquished by: (Signature) | Date / Time | Received by: (Signature) | Relinquished by: (Signature) | Date / Time | Received by: (Signature) |
|---|---|---|---|---|---|
| Randy Livingston | 9/18/90 1900 | | | | |
| Relinquished by: (Signature) | Date / Time | Received by: (Signature) | Relinquished by: (Signature) | Date / Time | Received by: (Signature) |
| | | | | | |
| Relinquished by: (Signature) | Date / Time | Received for Laboratory by: (Signature) | Date / Time | Remarks: Shipped Fed Ex # 53 Airbill # 9157648356 Custody Seals: 129344, 129345 | |

Distribution: White — Accompanies Shipment; Pink — Coordinator Field Files; Yellow — Laboratory File

5- 09889

EPA

United States Environmental Protection Agency
Contract Laboratory Program Sample Management Office
PO Box 818 Alexandria, VA 22313
703-557-2490 FTS 557-2490

# Organic Traffic Report
*(For CLP Use Only)*

Case Number: 14906

SAS No. (if applicable): N/A

1. Type of Activity (Check one)
☐ ENF ☐ NPLD ☐ RA ☒ SI ☐ STSI
☐ ER ☐ O&M ☐ RD ☐ ST ☐ Other *(Specify)*
☐ ESI ☐ PA ☐ RIFS ☐ STPA

Non-Superfund Program

Site Name: GMC FISCHER BODY DIVISION - ELYRIA PLANT

City, State: ELYRIA, OHIO

Site Spill ID: N/A

2. Region Number: V

Sampling Co.: FIT

Sampler (Name): Randy Livingston

3. Ship to:
S-CUBED
3398 Carnel Mtn. Road
San Diego, CA 92121
Attn: Elaine Walters

4. Date Shipped: 9/18/90

Carrier: F

Airbill Number: 9157648356

Triple volume required for matrix spike/duplicate aqueous sample.

Ship medium and high concentration samples in paint cans.

See reverse for additional instructions.

5. Sample Description *(Enter in Column A)*
1. Surface Water
2. Ground Water
3. Leachate
4. Rinsate
5. Soil/Sediment
6. Oil (SAS)
7. Waste (SAS)
8. Other (SAS) *(Specify)*

IF VOA SAMPLE PRESERVED INDICATE IN COLUMN C WITH Y OR N.

| CLP Sample Number *(From labels)* | (A) Sample Description *(From box 5)* | (B) Concentration L=low M=med H=high | (C) RAS Analysis VOA | BNA | Pest/PCB | ARO/TOX | (D) Special Handling | (E) Station Location | (F) Date/Time of Sample Collection | (G) Corresponding CLP Inorganic Sample Number |
|---|---|---|---|---|---|---|---|---|---|---|
| EKH 56 | 5 | L | X | X | X | | | S1 | 9/18/90 1150 | MEKS 56 |
| EKH 57 | 5 | L | X | X | X | | | S2 | 9/18/90 1245 | MEKS 57 |
| EKH 58 | 5 | L | X | X | X | | | S3 | 9/18/90 1355 | MEKS 58 |
| EKH 59 | 5 | L | X | X | X | | | S4 | 9/18/90 1435 | MEKS 59 |
| EKH 60 | 5 | L | X | X | X | | | S5 | 9/18/90 1515 | MEKS 60 |
| EKH 61 | 5 | L | X | X | X | | | S6 | 9/18/90 1555 | MEKS 61 |
| EKH 62 | 5 | L | X | X | X | | | S7 | 9/18/90 1630 | MEKS 62 |

EPA Form 9110-2 (11-89) Replaces EPA Form 2075-7, which may be used. Blue - Region Copy Pink - SMO Copy White - Lab Copy for Return to SMO Yellow - Lab Copy

ENVIRONMENTAL PROTECTION AGENCY
Office of Enforcement

REGION 5
230 South Dearborn Street
Chicago, Illinois 60604

# CHAIN OF CUSTODY RECORD

PROJ. NO.: F0H0331
PROJECT NAME: F05-9004-011 / CASE: 14906
SAMPLERS: (Signature) Randy Livingston

Cooler # 194

| STA. NO. | DATE | TIME | COMP. | GRAB | STATION LOCATION | NO. OF CONTAINERS | Metals & CN 8oz | | | | | | TAG NUMBERS | REMARKS Low Concen. MATRIX |
|---|---|---|---|---|---|---|---|---|---|---|---|---|---|---|
| MEKS56 | 9/18/90 | 1150 | | X | S1 | 1 | 1 | | | | | | 132354 | Soil |
| MEKS57 | 9/18/90 | 1245 | | X | S2 | 1 | 1 | | | | | | 132358 | Soil |
| MEKS58 | 9/18/90 | 1355 | | X | S3 | 1 | 1 | | | | | | 132362 | Soil |
| MEKS59 | 9/18/90 | 1435 | | X | S4 | 1 | 1 | | | | | | 132366 | Soil |
| MEKS60 | 9/18/90 | 1515 | | X | S5 | 1 | 1 | | | | | | 132370 | Soil |
| MEKS61 | 9/18/90 | 1555 | | X | S6 | 1 | 1 | | | | | | 132374 | Soil |
| MEKS62 | 9/18/90 | 1630 | | X | S7 | 1 | 1 | | | | | | 132378 | Soil |
| | | | | | | | | | | | | | Lot #: 8oz: 0137013 | |
| | | | | | SHIPMENT IS COMPLETE | | | | | | | | | |
| | | | | | | | | | | | | | (ITR IN Cooler # 194) | |

| Relinquished by: (Signature) | Date / Time | Received by: (Signature) | Relinquished by: (Signature) | Date / Time | Received by: (Signature) |
|---|---|---|---|---|---|
| Randy Livingston | 9/18/90 1900 | | | | |
| Relinquished by: (Signature) | Date / Time | Received by: (Signature) | Relinquished by: (Signature) | Date / Time | Received by: (Signature) |
| | | | | | |
| Relinquished by: (Signature) | Date / Time | Received for Laboratory by: (Signature) | Date / Time | Remarks Shipped Fed. Ex to BETZ Airbill # 9157648345 Custody Seals: 129346, 129347 | |

Distribution: White — Accompanies Shipment; Pink — Coordinator Field Files; Yellow — Laboratory File

5- 09890

United States Environmental Protection Agency
Contract Laboratory Program Sample Management Office
PO Box 818 Alexandria, VA 22313
703-557-2490 FTS 557-2490

EPA

# Inorganic Traffic Report
(For CLP Use Only)

Case Number: 14906
SAS No. (if applicable): N/A

1. Type of Activity (Check one): [ ] ENF [ ] NPLD [ ] RA [X] SI [ ] STSI [ ] ER [ ] O&M [ ] RD [ ] ST [ ] Other (Specify) [ ] ESI [ ] PA [ ] RIFS [ ] STPA

2. Region Number: V
Sampling Co.: FIT
Sampler (Name): Randy Livingston

4. Date Shipped: 9/18/90
Airbill Number: 9157648345
Carrier: F

Non-Superfund Program

Site Name: GMC FISCHER BODY DIVISION - ELYRIA PLANT
City, State: ELYRIA, OHIO
Site Spill ID: N/A

3. Ship To:
BETZ LABORATORIES
9659 Grogans Mill Road
The Woodlands, TX 77380
Attn: Susan Overseck

Double volume required for matrix spike/duplicate aqueous sample.

Ship medium and high concentration samples in paint cans.

See reverse for additional instructions.

5. Sample Description (Enter in Column A)
1. Surface Water
2. Ground Water
3. Leachate
4. Rinsate
5. Soil/Sediment
6. Oil (SAS)
7. Waste (SAS)
8. Other (SAS) (Specify)

| CLP Sample Number (From labels) | (A) Sample Description (From box 1) | (B) Concentration L=low M=med H=high | (C) RAS Analysis: Total Metals | (C) RAS Analysis: Cyanide | (D) Special Handling | (E) Station Location | (F) Date/Time of Sample Collection | (G) Corresponding Organic Sample Number |
|---|---|---|---|---|---|---|---|---|
| MEKS 56 | 5 | L | X | X | | S1 | 9/18/90 1150 | EKH 56 |
| MEKS 57 | 5 | L | X | X | | S2 | 9/18/90 1245 | EKH 57 |
| MEKS 58 | 5 | L | X | X | | S3 | 9/18/90 1355 | EKH 58 |
| MEKS 59 | 5 | L | X | X | | S4 | 9/18/90 1435 | EKH 59 |
| MEKS 60 | 5 | L | X | X | | S5 | 9/18/90 1515 | EKH 60 |
| MEKS 61 | 5 | L | X | X | | S6 | 9/18/90 1555 | EKH 61 |
| MEKS 62 | 5 | L | X | X | | S7 | 9/18/90 1630 | EKH 62 |

EPA Form 9110-1 (8-88) Replaces EPA Form 2075-6, which may be used. Green - SMO Copy Pink - Region Copy White - Lab Copy for Return to SMO Yellow - Lab Copy

recycled paper

ecology and environment

# RECEIPT FOR SAMPLES

U.S. EPA, 230 S. Dearborn St., Chicago, IL 60604

U. S. EPA ID NO OHD004201091

PROJ. ACCT. NO. F0H0331

TDD F05-9004-011

SPLIT SAMPLES ACCEPTED(✓) DECLINED( )

FACILITY/OCCUPANT NAME: GMC FISCHER BODY DIVISION - ELYRIA PLANT

FACILITY/OCCUPANT ADDRESS: 1400 Lowell Street, Elyria, Ohio 44035

| SAMPLE NUMBER | DATE | TIME | SPLIT SAMPLES (✓) | OTR* | ITR* | DESCRIPTION OF SAMPLE LOCATIONS | SEMIVOLATILES | PESTICIDES/PCBS | VOLATILES | METALS | CYANIDE | | | MATRIX |
|---|---|---|---|---|---|---|---|---|---|---|---|---|---|---|
| S1 | 9/18/90 | 1150 | | EKH 56 | MEKS 56 | S1 | X | X | X | X | X | | | Soil |
| S2 | 9/18/90 | 1245 | X | EKH 57 | MEKS 57 | S2 | X | X | X | X | X | | | Soil |
| S3 | 9/18/90 | 1355 | X | EKH 58 | MEKS 58 | S3 | X | X | X | X | X | | | Soil |
| S4 | 9/18/90 | 1435 | | EKH 59 | MEKS 59 | S4 | X | X | X | X | X | | | Soil |
| S5 | 9/18/90 | 1515 | X | EKH 60 | MEKS 60 | S5 | X | X | X | X | X | | | Soil |
| S6 | 9/18/90 | 1555 | | EKH 61 | MEKS 61 | S6 | X | X | X | X | X | | | Soil |
| S7 | 9/18/90 | 1630 | | EKH 62 | MEKS 62 | S7 | X | X | X | X | X | | | Soil |

TRANSFERRED BY: [signature] (Signature) 9/18/90 (Date) 1645 (Time)

RECEIVED BY: [signature] (Signature) 9-18-90 (Date) 1645 (Time)

DISTRIBUTION
WHITE: FIT SITE FILE
YELLOW: FACILITY/OCCUPANT
GREEN: FIT SAMPLE MANAGEMENT
PINK: U.S. EPA

TITLE: SENIOR SITE TECHNICIAN

TELEPHONE: 419-423-3526

**SAMPLER CHECKLIST**

**ALL LOW CONCENTRATION SAMPLES**

Site Name GMC FISCHER BODY DIV. ELYRIA PLT.

All the below procedures have been followed and all coolers properly packaged for shipment.

Randy Livingston
Sampler Signature

Cindy Schultz
Team Leader Signature

✓ 1. Is date shipped filled in on the OTR/ITR?

✓ 2. Is date and time of sample collection (Letter "F) filled in on the OTR/ITR?

✓ 3. Has either Shipment Complete or Shipment Not Complete been marked on the OTR/ITR?

✓ 4. On the C.O.C. form, is PAN in project no.; TDD/Case/SAS (if applicable) in project name for CLP and site name/case for CRL?

✓ 5. Are all dates and times on the C.O.C. form?

✓ 6. Has either grab or composite sample been marked on the C.O.C.?

✓ 7. Is the matrix filled out on each line of the C.O.C. form? (i.e., Soil, Water, Drinking Water) DO NOT USE ARROWS.

✓ 8. Is the Cooler # written on top of the C.O.C. form?

✓ 9. Is it referenced on the C.O.C.s which cooler # the OTR/ITR or the CRL tracking forms are in?

✓ 10. Are relinquish date, time, and signature on the bottom of the C.O.C.?

✓ 11. Is there one C.O.C. per cooler?

✓ 12. Has the proper paperwork been put in a plastic bag and taped to the inside of the cooler lid?

- o C.O.C. - Send white copy, bring back pink and yellow.
- o OTR/ITR - Send white and yellow copies and bring back blue/green and pink.
- o CRL tracking forms - send all of them.

SA002(04/18/90)

✓ 13. Is sample number, date, and time of collection permanently labeled on each sample bottle?

✓ 14. Are samples packaged in such a way to prevent breakage?

✓ 15. Have photographs been taken of each cooler showing ice, custody seals, and paperwork?

✓ 16. Are the coolers acceptable at Fed Ex?

- o Condition
- o Drain plug taped
- o Correctly labeled with address stickers

✓ 17. Are you sending the coolers to the correct lab? Are you using the correct lab acronym?

✓ 18. Did you call the SMC <u>before 10:00 a.m.</u> on the day after the sample shipment?

ONLY APPLIES TO WATERS

_____ 1. On the OTR/ITR forms, is the Sample Blank marked rinsate (4) in sample description (Letter "A").

_____ 2. For monitoring wells, has it been stated on the bottom of the inorganic C.O.C. whether the metals were filtered or not?

_____ 3. On the OTR/ITR forms, "blank" should be written under special handling (Letter "D") and on OTR, MSD should be marked in the same location.

_____ 4. Have the preservatives been written on the C.O.C. next to the bottle volume?

| | |
|---|---|
| $HNO_3$ for Metals | $K_2Cr_2O_7$, $+HNO_3$ for Hg |
| NaOH for CN | HCL for VOA |

_____ 5. Are sample water levels marked with a grease pencil on all sample bottles except for VOA?

QUESTIONS? CALL 800-238-5355 TOLL-FREE

TRACKING NUMBER

SENDER'S COPY

SENDER'S COPY

AIRBILL

TRACKING NUMBER

QUESTIONS? CALL 800-238-5355 TOLL-FREE

SENDER'S COPY

SENDER'S COPY

United States Environmental Protection Agency
Contract Laboratory Program Sample Management Office
PO Box 818 Alexandria, VA 22313
703-557-2490 FTS 557-2490

# Organic Traffic Report
(For CLP Use Only)

Case Number: 14906

SAS No. (if applicable): SDG EKH56 N/A

Sample Description (Enter in Column A)
1. Surface Water
2. Ground Water
3. Leachate
4. Effluent
5. Soil/Sediment
6. Oil (SAS)
7. Waste (SAS)
8. Other (SAS) (Specify)

IF VOA SAMPLE PRESERVED INDICATE IN COLUMN C WITH Y OR N.

2. Region Number: V
Sampling Co.: FIT
Sampler (Name): Randy Livingston
3. Ship to: S-CLBEU
3398 Carnel Mtn. Road
San Diego, CA 92121
Attn: Elaine Walters

4. Date Shipped: 9/18/90
Carrier: F
Airbill Number: 9157648356
Triple volume required for matrix spike/duplicate aqueous sample.
Ship medium and high concentration samples in paint cans.
See reverse for additional instructions.

5. Date Received: 9/19/90
Received by: [illegible]
Laboratory Contract Number: 68D90027
Unit Price:
6. Transfer to:
Date Received:
Received by:
Contract Number:
Price:

| CLP Sample Number (From labels) | (A) Sample Description (From box 1) | (B) Concentration L=low M=med H=high | (C) RAS Analysis VOA | BNA | Pest/PCB | ARO/TOX | (D) Special Handling | (E) Station Location | (F) Date/Time of Sample Collection | (G) Corresponding CLP Inorganic Sample Number | (H) Sample Condition on Receipt | (I) High Conc. Phase (Check below) Solid | Water-Mis Liq. | Non Water-Mis Liq. |
|---|---|---|---|---|---|---|---|---|---|---|---|---|---|---|
| EKH 56 | 5 | L | X | X | X | | | S1 | 9/18/90 1150 | MEKS 56 | OK | | | |
| EKH 57 | 5 | L | X | X | X | | | S2 | 9/18/90 1240 | MEKS 57 | | | | |
| EKH 58 | 5 | L | X | X | X | | | S3 | 9/18/90 1365 | MEKS 58 | | | | |
| EKH 59 | 5 | L | X | X | X | | | S4 | 9/18/90 1435 | MEKS 59 | | | | |
| EKH 60 | 5 | L | X | X | X | | | S5 | 9/18/90 1515 | MEKS 60 | | | | |
| EKH 61 | 5 | L | X | X | X | | | S6 | 9/18/90 1555 | MEKS 61 | | | | |
| EKH 62 | 5 | L | X | X | X | | | S7 | 9/18/90 1630 | MEKS 62 | | | | |

← last sample received for the SDG

EPA Form 9110-2 (11-88) Replaces EPA Form 2075-7, which may be used. Blue - Region Copy Pink - SMO Copy White - Lab Copy for Return to SMO Yellow - Lab Copy

# M E M O R A N D U M

TO: File

FROM: Randy Livingston R.L.

DATE: September 28, 1990

SUBJECT: Corrections in Sampling Paperwork, Case 14906
GMC Fischer Body Division - Elyria Plant, Elyria, Ohio
TDD #: F05-9004-011, PAN #: F0H0331SB

The statement "Shipment is complete." should not have been written on the chain of custody forms. It should have been written on the Organic Traffic Report and the Inorganic Traffic Report.

5739:1

# RECEIPT FOR SAMPLES

U.S. EPA, 230 S. Dearborn St., Chicago, IL 60604

U. S. EPA ID NO OHD004201091

PROJ. ACCT. NO. F0H0331

TDD F05-9004-011

SPLIT SAMPLES ACCEPTED(X) DECLINED( )

FACILITY/OCCUPANT NAME: GMC FISCHER BODY DIVISION - ELYRIA PLANT

FACILITY/OCCUPANT ADDRESS: 1400 Lowell Street, Elyria, Ohio 44035

| SAMPLE NUMBER | DATE | TIME | SPLIT SAMPLES (✓) | OTR# | ITR# | DESCRIPTION OF SAMPLE LOCATIONS | SEMIVOLATILES | PESTICIDES/PCBS | VOLATILES | METALS | CYANIDE | | | MATRIX |
|---|---|---|---|---|---|---|---|---|---|---|---|---|---|---|
| S1 | 9/18/90 | 1150 | | EKH 56 | MEKS56 | S1 | X | X | X | X | X | | | Soil |
| S2 | 9/18/90 | 1245 | X | EKH 57 | MEKS57 | S2 | X | X | X | X | X | | | Soil |
| S3 | 9/18/90 | 1355 | X | EKH 58 | MEKS 58 | S3 | X | X | X | X | X | | | Soil |
| S4 | 9/18/90 | 1435 | | EKH 59 | MEKS 59 | S4 | X | X | X | X | X | | | Soil |
| S5 | 9/18/90 | 1515 | X | EKH 60 | MEKS 60 | S5 | X | X | X | X | X | | | Soil |
| S6 | 9/18/90 | 1555 | | EKH 61 | MEKS 61 | S6 | X | X | X | X | X | | | Soil |
| S7 | 9/18/90 | 1630 | | EKH 62 | MEKS 62 | S7 | X | X | X | X | X | | | Soil |

TRANSFERRED BY: Randy Livingston (Signature) 9/18/90 (Date) 1645 (Time)

RECEIVED BY: [signature] (Signature) 9-18-90 (Date) 1645 (Time)

DISTRIBUTION
WHITE: FIT SITE FILE
YELLOW: FACILITY/OCCUPANT
GREEN: FIT SAMPLE MANAGEMENT
PINK: U.S. EPA

TITLE: SENIOR TECHNICIAN

TELEPHONE: 419-423-3526

Field Investigation Summary

Name of Site GMC-Fisher Body Division Elyria Division.

State Ohio

Team Leader Cindy Schultz

Date of Investigation 9/18/90

| Sampling | Soil | GW | SW | RW | KuniW | KontW |
|---|---|---|---|---|---|---|
| Number of Samples | 7 | | | | | |
| Number of Sample Locations | 7 | | | | | |

List Equipment Used: Power Auger, hand auger, post-hole digger, Shovel.

Geophysics or Other Out of the Ordinary Field Techniques: None.

Cost Saving Measures (explain): Conducted another site in the same general area in same week.

Attendance by State of EPA Personnel (explain): None. Ahmed Mustafa, OEPA could not make it.

Other (i.e., audits, interaction with other agencies, unplanned cir-

cumstances): Camera failure.
Power auger could not penetrate the dense wet Clay & Cobbles in this area.

3 of 7 Soil Samples were split with OHM Materials, FMC's Consultant.

**ecology and environment, inc.**
111 WEST JACKSON BLVD., CHICAGO, ILLINOIS 60604, TEL. 312-663-9415
International Specialists in the Environment

Site Name: GMC-Fischer Body Division-Elyria Plant.

E&E Staff: Cynthia Schultz

| PRP Contact | Date Contacted | Package Sent | Date For Inspection |
|---|---|---|---|
| Name: Phillip Kienle | 8/22/90 | 8/24/90 | 9/18/90 |

Title: Senior Environmental Engineer

Firm: GMC

Phone No. (313) 578-3006

Additional Comments:

Very Cooperative.

recycled paper

CC: Don Josiff

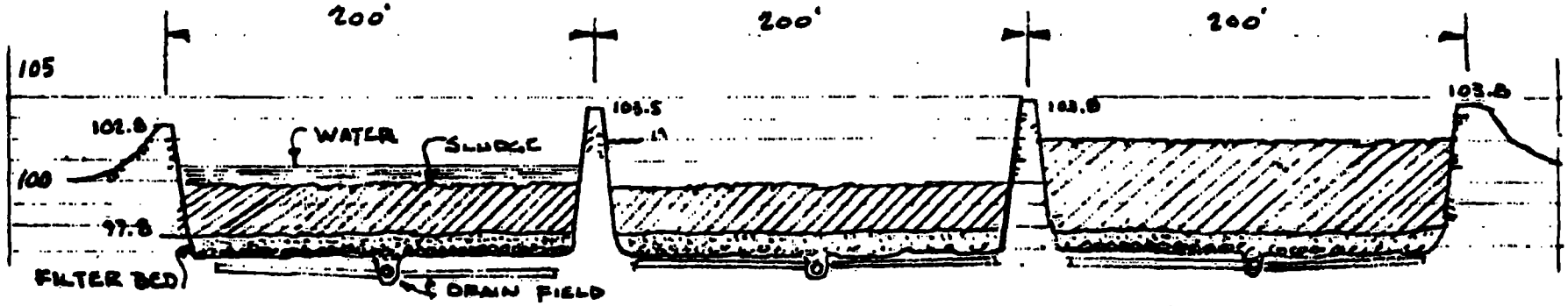


## #1 LAGOON
(NORTH)

1971 - PLACED IN OPERATION
FAILED BECAUSE OF FILTERING MEDIA - PLUGGED AND USED FOR SLUDGE RESERVOIR
1972 - SLUDGE REMOVED - ADDITIONAL SAND PLACED FOR FILTERING
1973 - PLACED IN OPERATION AND ABANDONED, - UNRELIABLE.
1977 - SLUDGE & ORIGINAL FILTERING MEDIA REMOVED - RECONSTRUCTED
1978 - PLACED IN OPERATION ALTERNATELY WITH #2
1978 - OPERATING
1983 - OCT - CLEANED OUT 280M

TO DATE - 3 CLEANOUTS.

## #2 LAGOON
(CENTER)

1972 PLACED IN OPERATION
1974 SLUDGE REMOVED
1975 IN OPERATION
1977 SLUDGE REMOVED
1978 IN OPERATION ALTERNATELY WITH #1
1983 - OCT - 2" ALLOW. FREEBD - IDLE

TO DATE - 2 CLEANOUTS

## #3 LAGOON
(SOUTH)

1974 PLACED INTO OPERATION
1976 - SLUDGE REMOVED
1977 - IN OPERATION
1978 - FILLED TO CAPACITY (OVERFLOWED)
1979 - FILLED AS SHOWN
1981 - SLUDGE REMOVED - 450.M
1983 - FULL - OPERATING

TO DATE - 2 CLEANOUTS (1981)

NOTES:

LAGOONS CONSTRUCTED IN 1970 - 1971
#1 LAGOON FILTERING MEDIA INADEQUATE
REVISED FILTERING MEDIA FOR #2 & 3 TO 8" SAND OVER 4" PEA SIZE LIMESTONE
#1 LAGOON MEDIA REPLACED WITH REVISED MEDIA IN 1977. TO DATE ALL LAGOONS FUNCTIONAL. ELEVATIONS AS SHOWN TO DATE 12-6-79

# LAGOON PROFILE
(PROFILES NOT UPDATED)

# FILTERING BASIN RESUME

#3 LAGOON SLUDGE RMO 12-6-79
#1 " " " 10-1-81 REV.
10-22-83 "

KRETCHMAN

8/8/88

Exhibit A

Air Permits for Premises 0247040038

| Source No. | Equip. Name | Permit Rec'd | Permit Exp | T |
|---|---|---|---|---|
| B001 | Boiler No. 1 | 03/07/86 | 03/06/89 | Y |
| B002 | Boiler No. 2 | 03/07/86 | 03/06/89 | Y |
| B003 | Boiler No. 3 | 08/16/87 | 09/10/90 | Y |
| B005 | Boiler No. 4 | 05/31/85 | 05/31/88 | Y |
| | (Registration Status - emergency back-up only) | | | |
| K008 | Misc. paintline P-3/oven 28 | 06/13/86 | 06/12/89 | N |
| K012 | Adh Spray Appl'n | 04/17/87 | 04/17/90 | N |
| K013 | Adh Spray Appl'n | 04/17/87 | 04/17/90 | N |
| K014 | Adh Spray Appl'n | 04/17/87 | 04/17/90 | N |
| K015 | Adh Spray Appl'n | 04/17/87 | 04/17/90 | N |
| K016 | Adh Spray Appl'n | 04/17/87 | 04/17/90 | N |
| N001 | Pyrolytic Oven | 06/29/87 | 06/29/90 | N |
| P036 | Tool Room | Reg. | | Y |
| P037 | Rack Room | Reg. | | Y |
| P038 | Mask Room | Reg. | | Y |
| P039 | Maintenance | Reg. | | Y |
| P040 | Battery Chg PH1 | Reg. | | Y |
| P042 | Paint Mix Room | Reg. | | Y |
| P043 | Foam Line | 05/03/85 | 05/02/88* | Y |
| P044 | Foam Line | 05/03/85 | 05/02/88* | Y |
| P045 | Foam Line | 05/03/85 | 05/02/88* | Y |
| P058 | Phosphate | Reg. | | Y |
| P064 | Wash & Phosphate | Reg. | | Y |
| P080 | Paint Mask Wash | Reg. | | N |
| P083 | Paint Mask Wash | 05/06/74 | Reg. | N |
| P085 | Paint Mask Wash | Reg. | | N |
| P087 | Paint Mask Wash | 07/15/86 | 07/14/89 | N |
| P088 | Paint Mask Wash | 07/15/86 | 07/14/89 | N |
| P089 | Paint Mask Wash | 07/15/86 | 07/14/89 | N |
| P093 | Paint Mask Wash | 07/15/86 | 07/14/89 | N |
| P095 | Paint Mask Wash | 07/15/86 | 07/14/89 | N |
| P096 | Parts Degreaser | 05/06/74 | Reg. | N |
| P111 | Paint Oven | 12/13/85 | 12/12/88 | N |
| P112 | Paint Oven | 03/14/86 | 03/13/89 | N |
| P118 | Paint Mask Wash | 07/15/86 | 07/14/89 | N |
| P121 | Foam Line | 07/15/86 | 07/14/89 | Y |
| P124 | Battery Charge | 05/06/74 | Reg. | Y |
| P155 | Elec. Oven | 11/03/82 | Reg. | N |
| P156 | Elec. Oven | Reg. | | N |
| P160 | Paint & Wipe Mach. | 05/03/85 | 05/02/88* | N |

* Renewed - new permit and expiration date not yet received.

| Source No. | Equip. Name | Permit Rec'd | Permit Exp | T |
|---|---|---|---|---|
| P162 | ABS Vacuform | Reg. | | Y |
| P163 | Exec. Cafeteria | Reg. | | Y |
| P164 | Main Cafeteria | Reg. | | Y |
| P165 | Chemistry Lab | Reg. | | Y |
| P166 | Reliability Lab | Reg. | | Y |
| P170 | Parts Washer | Reg. | | Y |
| P172 | Tool Room H.T. | Reg. | | Y |
| P173 | Oil Storage Crs. | Reg. | | Y |
| P174 | Diesel Gen. | Reg. | | Y |
| P175 | Diesel Fire Pump | Reg. | | Y |
| P176 | Diesel Fire Pump | Reg. | | Y |
| P178 | Parts Washer | Reg. | | Y |
| P180 | Injection Molder | Reg. | | Y |
| P181 | Injection Molder | Reg. | | Y |
| P182 | Injection Molder | Reg. | | Y |
| P187 | Chrome Tower Wt. | 03/07/86 | 03/06/89 | N |
| P188 | Chrome Tower Wt. | 03/07/86 | 03/06/89 | N |
| P189 | Bisulfite Handling | 03/07/86 | 03/06/89 | Y |
| P190 | 3 Hot Melt Glue | 10/10/86 | 10/09/89 | N |
| P191 | Sunroof Welding Line | Reg. | | N |
| P193 | Heat Treat Furnace | Reg. | | N |
| P194 | Injection Molding | Reg. | | Y |
| P195 | Injection Molding | Reg. | | Y |
| P196 | Injection Molding | Reg. | | Y |
| P197 | Injection Molding | Reg. | | Y |
| P198 | Injection Molding | Reg. | | Y |
| P199 | Injection Molding | Reg. | | Y |
| P201 | Filter Door Welder | Reg. | | Y |
| P202 | Molder Purge Exhaust | 11/16/84 | Reg. | Y |
| P202 | Molder Purge Exhaust | 11/16/84 | Reg. | Y |
| P202 | Molder Purge Exhaust | 11/16/84 | Reg. | Y |
| P203 | PVC Mold #326 | 11/16/84 | Reg. | Y |
| P204 | Vented BBL Mold | 11/16/84 | Reg. | Y |
| P205 | Vented BBL Mold | 11/16/84 | Reg. | Y |
| P206 | Seat Frame Weld Line | 03/13/87 | 03/13/90 | N |
| P207 | Seat Frame Weld Line | 03/13/87 | 03/13/90 | N |
| P208 | Plastic Inj. Molder | 03/13/87 | Reg. | Y |
| P209 | Vertical Injection Molders (5) | Reg. | | Y |
| R017 | Paint Booth | 07/15/86 | 07/14/89 | N |
| R025 | Paint Booth | 05/03/74 | Reg. | N |
| R026 | Paint Booth | 05/03/74 | Reg. | N |
| R027 | Paint Booth | 05/03/74 | Reg. | N |
| R036 | Paint Booth | 03/07/86 | 03/06/89 | N |
| R044 | Paint Booth | 07/15/86 | 07/14/89 | N |
| R045 | Spray Booth | Reg. | | N |
| R051 | 14' Paint Booth | 12/13/85 | 12/12/88 | N |
| R052 | 14' Paint Booth | 10/10/80 | 10/09/89 | N |

| Source No. | Equip. Name | Permit Rec'd | Permit Exp | T |
|---|---|---|---|---|
| R054 | Paint Booth 24 | 03/13/87 | 03/13/90 | N |
| R055 | Qtr. Window Asm. | 03/13/87 | 03/13/90 | N |
| T001 | Fuel Oil Tank | Reg. | | Y |
| T002 | Fuel Oil Tank | Reg. | | Y |
| T003 | Mold Release | Reg. | | Y |
| T004 | Mold Release | Reg. | | Y |
| T005 | Waste Oil | Reg. | | Y |
| T006 | Gasoline | Reg. | | N |
| T007 | Gasoline | Reg. | | N |
| T009 | Foam Bulk Storg | Reg. | | Y |
| T010 | Foam Bulk Storg | Reg. | | Y |
| T011 | Foam Bulk Storg | Reg. | | Y |
| T012 | Foam Bulk Storg | Reg. | | Y |
| T013 | Foam Bulk Storg | 05/21/85 | 05/20/88* | Y |
| T014 | Foam Bulk Storg | 05/21/85 | 05/20/88* | Y |
| T015 | Foam Bulk Storg | 05/21/85 | Reg. | Y |
| T016 | Foam Bulk Storg | 05/21/85 | Reg. | Y |
| T017 | Foam Bulk Storg | 05/21/85 | Reg. | Y |
| T018 | Foam Bulk Storg | 05/21/85 | Reg. | Y |
| T019 | Foam Bulk Storg | 05/21/85 | Reg. | Y |
| T020 | Foam Bulk Storg | 05/21/85 | 05/20/88* | Y |
| T021 | Foam Bulk Storg | 05/21/85 | 05/20/88* | Y |

* Renewed - new permit and expiration date not yet received.

D. 17000

Fisher Guide Division
General Motors Corporation
P.O. Box 4025
Elyria, Ohio 44036-0760

Elyria Plant

September 28, 1987

Ohio Environmental Protection Agency
Box 1049
1800 Watermark Drive
Columbus, Ohio 43266-0149

Attention: Tutu Rosanwo

Re: Performance Evaluation Report DMR-QA Study #7
Non-acceptable Chromium Report Value OH 0000 272

Madam:

Upon receipt of subject report dated 7-15-87 we have attempted the following corrective actions in determining why chromium was 4 UG/L outside of accentable range.

1. Standard methods have been checked and found to be in order.

2. Instruments and standards were rechecked and found to be correct.

3. Original samples were rechecked independently by lab personnel and supervisor. Results were the same as reported (150 UG/L).

4. Original sample was sent to a contract laboratory for analysis. Results were 160 UG/L chromium.

5. Per our phone discussion on 9-28-87, we will continue to monitor our QC/QA program by analysis of additional spiked samples to determine accuracy with this element.

If you require any additional information, please contact the writer at (216) 329-1250.

Sincerely yours,

J A Lucas 9/28/87

J. A. Lucas
Plant Engineer

cc: Bill Bush-OEPA Twinsburg
P. Kienle-Fac. Eng.
J. Mullins-EAS

RECEIVED
OCT 2 - 1987
OHIO EPA-N.E.D.O.

PERFORMANCE EVALUATION REPORT DATE: 07/15/8

DMR-QA STUDY NUMBER 007

PERMITTEE: OH0000272 FISHER GUIDE DIV OF GENERAL MOTORS IX

| ANALYTES | V P | REPORT VALUE | TRUE VALUE* | ACCEPTANCE LIMITS | WARNING LIMITS | PERFORMANC EVALUATION |
|---|---|---|---|---|---|---|
| TRACE METALS IN MICROGRAMS PER LITER: | | | | | | |
| CHROMIUM | | 150 | 191 | 154.- 227. | 163.- 218. | NOT ACCEPTAB |
| COPPER | | 520 | 492 | 440.- 536. | 452.- 524. | ACCEPTAB |
| NICKEL | | 330 | 320 | 273.- 364. | 284.- 352. | ACCEPTAB |
| MISCELLANEOUS ANALYTES: | | | | | | |
| PH-UNITS | | 8.4 | 8.50 | 8.04- 8.89 | 8.15- 8.79 | ACCEPTAB |
| TOTAL SUSPENDED SOLIDS (IN MG/L) | | 21.60 | 25.1 | 16.4- 28.0 | 17.8- 26.6 | ACCEPTAB |
| ADDITIONAL MISCELLANEOUS ANALYTES: | | | | | | |
| TOTAL CYANIDE (IN MG/L) | | 0.24 | 0.225 | .110- .298 | .134- .274 | ACCEPTAB |

* BASED UPON THEORETICAL CALCULATIONS OR A REFERENCE VALUE WHEN NECESSARY

CC: BILL BUCH
DEE 3/14/88

FISHER GUIDE

Fisher Guide Division
General Motors Corporation

P.O. Box 4025
Elyria, Ohio 44036-0760

**Elyria Plant**

TO: OHIO EPA
N.E. DISTRICT OFFICE
2110 EAST AURORA RD
TWINSBURG, OHIO 44087
ATTN: DENNIS E. LEE

DATE 8-13-87

RE: Proposal No.
Order No.
Project No.
Other 3I50000/#CD

Gentlemen:

The enclosed information relative to QC/QA PROCEDURES USED AT FISHER GUIDE ELYRIA WASTEWATER TREATMENT LAB. is being forwarded for:

- [x] your file/use
- [ ] your review
- [ ] your approval
- [ ] your signature
- [x] as you requested LTR 8-2-87
- [ ] approved
- [ ] approved as noted
- [ ] other ( )

| No. Copies | Description |
|---|---|
| 1 | QC/QA PROCEDURE 11-11-85, 2 PAGES |

Please return ___ copies, ___ signed original(s) to the writer and return ___ copies direct to

Remarks "WASTEWATER" SAMPLES FROM EZA ASSOC. ARE ANALYZED QUARTERLY AS AN ADDITIONAL CHECK, RESULTS HAVE BEEN GENERALLY GOOD.

cc: J. BERENT
P. KIEHLE
J. LUCAS

By F. B. [signature]
Fisher-Guide, Elyria, OH
Plant Engineering
Phone (216) 329 - 1259

11-11-85

# QUALITY CONTROL/QUALITY ASSURANCE PROCEDURES AT WASTE TREATMENT

The purpose for this QC/QA Manual is to insure continued excellence in all Waste Treatment analytical work for N.P.D.E.S. reporting.

Cyanide - Test Method 413 Standard Methods 413B Total Cyanide after Distillation Modifications

Standards 413 D - 3.b standardization of the 1000 PPm CN is not necessary as often as suggested. We have found a 1000 PPm Std, to maintain its concentration for months if refrigerated and kept dark. Periodic checks with AG $NO_3$ will be made every three months to establish any change in concentration.

3.c. Second dilution "of Std. B" is 10 ml in 500 ml. instead of 100 ml. This makes "Standard C" which is equivalent to 0.2 PPm CN. *NOTE: All dilutions of Standards must be with .25N NAOH, as method suggests, not with just distilled water.

3.d. Magnetic stirrer in flask is of significant importance. Good mixing is essential.

4.a. Calibration curve is adequately prepared with concentrations up to 2 ug CN; not necessary to G.

4.b. Volumes of "Portions" needed are labeled on the graduate cylinders.

5. The factor "B" in the calculation is 200 ml, since this is the "Total" absorbing solution (That is .75 ml + water, to the 200 ml mark)

And since "B" and "C" are constant, the only variable in the equation is D, which is either 10, 15 or 20 (C is usually 500)

413F For Amendable CN

4.c. We have found ascorbic acid to react with some unknown species in our water. We, therefore, use sodium sulfite, as a reductant. This has been shown to effectively eliminate interference.

4.d. An explanation of the chlorinated portion yielding more color than the original sample, may be found by studying 413 3.a, where "Selection of Method" is discussed. Notice especially the content regarding "Nitriles" it is suspected that in certain cases, aldehydes may be either present in M.B.W. or perhaps synthesized when hypochlorite is added to MBW, thus creating a favorable environment (chemically) for nitriles to form. These nitriles are suspect cause for the false color. When this occurs, and more color is evident in the chlorinated portion, then assign .01 ppm as the concentration of cyanide.

Note with cyanide analysis as well as all other analytical work use only dated reagents with current shelf life.

A blank (distilled water plus other reagents less metal) is always used for each analysis.

Copper - Standard Method 301 A. Nickel Chrome
We will use 2 standards 5 PPm and .5 except for copper and chrome we use 5 PPm .5 PPm and .05 PPm.

Blanks of distilled water with HN03 will be used.

Hexavalent Chrome Standard Method 307
A blank (distilled water plus other reagents less metal) is always used for each analysis.

Standards will be 1 PPm.

Total Suspended Solids Standard Method 208B
We will split a sample 1 time per month duplicate or every 4 samples.

We will continue to test unknown spiked samples Quarterly. (current contract with Environmental Resource Associates)

We also participate in the annual voluntary EPA (Federal) Spiked Sample Program.

Lab equipment - meters, balance, spectro - photomater, A.A. (Quarterly) will be checked and calibrated Annually by service technicians.

FISHER GUIDE
Fisher Guide Division
General Motors Corporation
P.O. Box 4025
Elyria, Ohio 44036-0760

Elyria Plant

April 13, 1988

~~Mr. William Bush~~ DAVE
Ohio Environmental Protection Agency
Northeast District Office
2110 East Aurora Road
Twinsburg, Ohio 44087

Subject: NPDES Permit 3IS00001*CD

Dear Mr. Bush:

In accordance with provision of part III Section 12A of the subject permit the following is notification of a slight excursion of copper concentration at source Code 601 for the March 1988 Reporting Period:

THE DAY BEFORE WE WERE THERE.

| DATE | ACTUAL ug/L | LIMIT ug/L |
|---|---|---|
| 3/3 | 52 | 43 |
| 3/10 | 177 | 104 |
| 3/17 | 66 | 52 |

The excursion was caused by the transfer of leachate, from our surface impoundment presently undergoing closure operations, directly into the wastewater treatment system. The actual concentrations shown are well within the former allowable daily limit of 1000 ug/L but are slightly in excess of the new March 1, 1988 allowable limits.

Fisher Guide has dedicated a 150,000 gallon storage tank within the wastewater treatment system for the storage/treatment of leachate generated from impoundment closure activities. By utilizing this tank, additional leachate treatment and/or monitoring can be performed as necessary. Construction of the closure cell cap will be completed within 4 to 6 weeks, thereby eliminating the infiltration of leachate producing precipitation.

Very truly yours,

James A. Lucas

James A. Lucas
Plant Engineer

RECEIVED
APR 20 1988
OHIO EPA-N.E.D.O.

~~4/14/88~~ 03/15/88

OHIO EPA GC/GC-MS WATER SAMPLE ANALYSIS Date Received 88-03-15

Surface Water X; Groundwater ___; Approved ___ Laboratory Number 01371

District: SWDO ___; SEDO ___; NEDO X; NWDO ___; CDO ___.

Sample volume received: 2 vials Yes X; No ___; Quarts (Number) TWO.

Sample Type: Screening ___; Compliance X; Complaint ___; Survey ___;
Litigation ___. WELL USE: Public ___; Industrial ___;
Monitor ___; Private ___; Irrigation ___; Private Residential ___.

Sample Collector's Name STROUD

| | Y Y | M M | D D | H H | M M |
|---|---|---|---|---|---|
| Sample Date/Sample Time :Begin | 88 | 03 | 14 | 13 | 15 |
| Sample Date/Sample Time :End | | | | | |

Facility Name GMC. ELYRIA
Facility NPDES # ___ Ohio Permit # ___

Well Owner ___ Well Depth/Aquifer ___
Well Owner Address ___
Well County/Township ___

Sample Location Description ___

Receiving Stream (RM) ___
Latitude/Longitude ___
Outfall Number 601 Well Number ___

| | | (Date / Extracted | Analyzed) | File Number | Analyst |
|---|---|---|---|---|---|
| X | Volatiles | ( | 88-03-24) | A324-9 | Bailey |
| X | Acid Extractables | (3-10-88 | 4-20-88) | 0420X1371 | Wahlman |
| X | Base Neutral Extractables | ( " | " ) | " | " |
| | Pesticides | ( | ) | | |
| | PCBs | ( | ) | | |
| | Broad Scan | ( | ) | | |
| | Parameter(s) | | | | |
| | | ( | ) | | |

Sample: Grab X; Discontinuous Composite ___; Continuous Composite ___; Proportional Composite ___.
Composite Sample Information: Volume/Frequency/Duration

Comments on back: Yes ___; No X. Bioassay Sample Submitted: Yes ___; No X.

RECEIVED
MAY 10 1988
OHIO EPA-N.E.D.O.

VOLATILE ORGANICS SAMPLE RESULTS
METHODS 601 & 602

SAMPLE 01371 GMC ELYRIA - 601
DATE COLLECTED 88-03-14 COLLECTOR STROUD
DATE ANALYZED 88-03-24 ANALYST C. BAILEY
DATE PROCESSED 88-05-05 APPROVED BY TK

| NO. | CAS NO. | COMPOUND | MDL | F* | C* | CONC (ug/L) | |
|---|---|---|---|---|---|---|---|
| 1 | 75-35-4 | 1,1-Dichloroethene | 0.5 | 1 | yes | <MDL | |
| 2 | 75-09-2 | Methylene chloride | 1.8 | | | | |
| 3 | 156-60-5 | trans-1,2-Dichloroethene | 0.5 | | | | |
| 4 | 75-34-3 | 1,1-Dichloroethane | 0.5 | | | 1.6 | |
| 5 | 67-66-3 | Chloroform | 0.5 | | | 3.5 | |
| 6 | 71-55-6 | 1,1,1-Trichloroethane | 0.5 | | | 15.4 | |
| 7 | 56-23-5 | Carbon tetrachloride | 0.5 | | | <MDL | |
| 8 | 107-06-2 | 1,2-Dichloroethane | 0.5 | | | <MDL | |
| 9 | 79-01-6 | Trichloroethene | 0.5 | | | 21.4 | |
| 10 | 78-87-5 | 1,2-Dichloropropane | 0.5 | | | <MDL | |
| 11 | 75-27-4 | Bromodichloromethane | 0.5 | | | | |
| 12 | 100-75-8 | 2-Chloroethylvinyl ether | 0.5 | | | | |
| 13 | 10061-02-6 | trans-1,3-Dichloropropene | 0.5 | | | | |
| 14 | 10061-01-5 | cis-1,3-Dichloropropene | 0.5 | | | | |
| 15 | 79-00-5 | 1,1,2-Trichloroethane | 0.5 | | | | |
| 16 | 127-18-4 | Tetrachloroethene | 0.5 | | | | |
| 17 | 124-48-1 | Dibromochloromethane | 0.5 | | | | |
| 18 | 106-93-4 | 1,2-Dibromoethane | 0.5 | | | | |
| 19 | 630-20-6 | 1,1,1,2-Tetrachloroethane | 0.5 | | | | |
| 20 | 75-25-2 | Bromoform | 0.5 | | | | |
| 21 | 79-34-5 | 1,1,2,2-Tetrachloroethane | 0.5 | | | | |
| 22 | 71-43-2 | Benzene | 0.5 | | | | * |
| 23 | 108-88-3 | Toluene | 0.5 | | | 0.8 | * |
| 24 | 108-90-7 | Chlorobenzene | 0.5 | | | <MDL | |
| 25 | 100-41-4 | Ethylbenzene | 0.5 | | | | * |
| 26 | 108-38-3 | 1,3-Dimethylbenzene** | 0.5 | | | | * |
| 27 | 106-42-3 | 1,4-Dimethylbenzene** | 0.5 | | | | * |
| 28 | 100-42-5 | Ethenyl benzene | 0.5 | | | | * |
| 29 | 95-47-6 | 1,2-Dimethylbenzene | 0.5 | | | 0.5 | * |
| 30 | 95-49-8 | 2-Chlorotoluene | 0.5 | | | <MDL | |
| 31 | 106-43-4 | 4-Chlorotoluene | 0.5 | | | | |
| 32 | 541-73-1 | 1,3-Dichlorobenzene | 0.5 | | | | |
| 33 | 106-46-7 | 1,4-Dichlorobenzene | 0.5 | | | | |
| 34 | 95-50-1 | 1,2-Dichlorobenzene | 0.5 | | | | |

*F=Dilution
*C=Confirmed
** 1,3-Dimethylbenzene and 1,4-Dimethylbenzene coelute and cannot be separately quantitated at this time.
COMMENTS:

* Results for these compounds are minimum values as sample was analyzed more than 7 days after collection. (instrument was down). CB.

OHIO EPA * GC/MS ANALYSES REPORT * PURGEABLES *

INFORMATION FOR NON PRIORITY POLLUTANTS FOUND IN THE SAMPLE: 0413P1371
MATCH BETWEEN MASS SPECTRA OF UNKNOWN AND OF NBS LIBRARY IS AT LEAST
50% BY PURITY AND 85% BY FIT.

```
Code/Entry:                Name
          Ret Time     B Pk        Area   MW     Formula
          CAS-Number  (UP#1,UP#2)     Mass/Intensity Pairs

 NB     86: 2-PROPANONE  (ACETONE)
                        43                 58   C3.H6.O
                 67-64-1              (  13,   27)(  14,   87)(  15,  341)
```

OHIO EPA * GC/MS ANALYSIS REPORT * BASE-NEUTRAL AND ACID EXTRACTABLES

SAMPLE: 01371
DATE COLLECTED: 3-14-88
APPROVED BY/DATE: TR/4-27-88

LABORATORY NUMBER: 0420x1371
DATE ANALYZED/ANALYST: 4-20-88 Wachman
DATE EXTRACTED/BY: 3-18-88 Holland
DILUTION (F): 5.00

| LBR# | CAS# | COMPOUND | CONC. (UG/L) | MDL X F | COMMENTS |
|---|---|---|---|---|---|
| 2 | 111-44-4 | BIS(2-CHLOROETHYL) ETHER | ALL<MDL xF | 3.4 | Data should not be used for Compliance Monitoring Reporting |
| 3 | 541-73-1 | 1,3-DICHLOROBENZENE | | 2.2 | |
| 4 | 106-46-7 | 1,4-DICHLOROBENZENE | | 2.0 | |
| 5 | 95-50-1 | 1,2-DICHLOROBENZENE | | 2.0 | |
| 6 | 108-60-1 | BIS(2-CHLOROISOPROPYL) ETHER | | 2.7 | |
| 7 | 67-72-1 | HEXACHLOROETHANE | | 2.1 | |
| 8 | 621-64-7 | N-NITROSODI-N-PROPYLAMINE | | 3.6 | |
| 10 | 98-95-3 | NITROBENZENE | | 2.9 | |
| 11 | 78-59-1 | ISOPHORONE | | 3.6 | |
| 13 | 111-91-1 | BIS(2-CHLOROETHOXY) METHANE | | 3.4 | |
| 14 | 120-82-1 | 1,2,4-TRICHLOROBENZENE | | 2.3 | |
| 16 | 91-20-3 | NAPHTHALENE | | 2.3 | |
| 17 | 87-66-3 | HEXACHLOROBUTADIENE | | 2.3 | |
| 18 | 77-47-4 | HEXACHLOROPENTADIENE | | 2.1 | |
| 19 | 91-58-7 | 2-CHLORONAPHTHALENE | | 2.3 | |
| 20 | 208-96-8 | ACENAPHTHYLENE | | 1.9 | |
| 21 | 131-11-3 | DIMETHYL PHTHALATE | | 4.6 | |
| 22 | 606-20-2 | 2,6-DINITROTOLUENE | | 2.6 | |
| 23 | 83-32-9 | ACENAPHTHENE | | 1.8 | |
| 24 | 121-14-2 | 2,4-DINITROTOLUENE | | 2.2 | |
| 25 | 86-73-7 | FLUORENE | | 1.7 | |
| 26 | 84-66-2 | DIETHYL PHTHALATE | | 4.0 | |
| 27 | 7000-72-3 | 4-CHLOROPHENYL PHENYL ETHER | | 2.1 | |
| 28 | 86-30-6 | N-NITROSODIPHENYL AMINE | | 3.4 | |
| 29 | 101-55-3 | 4-BROMOPHENYL PHENYL ETHER | | 1.8 | |
| 30 | 118-74-1 | HEXACHLOROBENZENE | | 4.0 | |
| 31 | 85-01-8 | PHENANTHRENE | | 2.0 | |
| 32 | 120-12-7 | ANTHRACENE | | 1.6 | |
| 33 | 84-74-2 | DI-N-BUTYL PHTHALATE | | 2.6 | |
| 34 | 206-44-2 | FLUORANTHENE | | 2.3 | |
| 35 | 129-00-0 | PYRENE | | 2.5 | |
| 36 | 85-68-7 | BENZYLBUTYL PHTHALATE | | 1.9 | |
| 37 | 56-55-3 | BENZO(A)ANTHRACENE | | 2.3 | |
| 38 | 218-01-9 | CHRYSENE | | 2.5 | |
| 39 | 117-81-7 | BIS(2-ETHYLHEXYL) PHTHALATE | | 1.9 | |
| 40 | 117-84-0 | DI-N-OCTYL PHTHALATE | | 2.0 | |
| 41 | 207-08-9 | BENZO(K)FLUORANTHENE | | 2.5 | |
| 42 | 205-99-2 | BENZO(B)FLUORANTHENE | | 2.9 | |
| 43 | 50-32-8 | BENZO(A)PYRENE | | 2.4 | |
| 44 | 193-39-5 | INDENO(1,2,3-CD)PYRENE | | 2.7 | |
| 45 | 53-70-3 | DIBENZO(A,H)ANTHRACENE | | 3.0 | |
| 46 | 191-24-2 | BENZO(G,H,I)PERYLENE | | 2.9 | |
| 48 | 108-95-2 | PHENOL | | 1.3 | |
| 49 | 95-57-8 | 2-CHLOROPHENOL | | 2.7 | |
| 51 | 85-75-5 | 2-NITROPHENOL | | 2.8 | |
| 52 | 105-67-9 | 2,4-DIMETHYLPHENOL | | 2.4 | |
| 53 | 120-83-2 | 2,4-DICHLOROPHENOL | | 3.0 | |
| 54 | 59-50-7 | 4-CHLORO-3-METHYLPHENOL | | 13.1 | |
| 55 | 88-07-2 | 2,4,6-TRICHLOROPHENOL | | 8.4 | |
| 56 | 51-28-5 | 2,4-DINITROPHENOL | | 6.3 | |
| 57 | 100-02-7 | 4-NITROPHENOL | | 4.8 | |
| 58 | 534-52-1 | 2-METHYL-4,6-DINITROPHENOL | | 11.7 | |
| 59 | 87-86-5 | PENTACHLOROPHENOL | | 11.0 | |

OHIO EPA * GC/MS ANALYSES REPORT * BASE-NEUTRAL AND ACID EXTRACTABLES

INFORMATION FOR NON PRIORITY POLLUTANTS FOUND IN THE SAMPLE: 0420X1371
MATCH BETWEEN MASS SPECTRA OF UNKNOWN AND OF NBS LIBRARY IS AT LEAST
50% BY PURITY AND 85% BY FIT.

| Code/Entry: | Name | | | |
|---|---|---|---|---|
| Ret Time | B Pk | Area | MW | Formula |
| CAS-Number | (UP#1,UP#2) | Mass/Intensity Pairs | | |
| NB 2793: | ETHANOL, 2-BUTOXY- | | | |
| | 57 | | 118 | C6.H14.O2 |
| 111-76-2 | | ( 27, 121)( 29, 353)( 31, 86) | | |

TO: Bill Bush, Industrial Wastewater DATE: May 2, 1988

FROM: Dave Stroud, DWQMA, NEDO DLS

RE: GMC - Fisher

---

Attached is a copy of the lab results for conventional parameters from the sampling we conducted at GMC - Elyria on 3-14-88. The organics results are not back yet. I will get a copy of them to you as soon as they come in. I still have not seen the company's results from our split sample. Once you receive them I would like to review them for precision.

The phenolics results is quite high. If the facility remains open, I recommend limits for phenolics be placed on the 601 outfall. The zinc concentration is high too. Are they within permit limits?

Let me know if you have any questions or comments.

DS:bjh

**OhioEPA** DIVISION OF WASTEWATER POLLUTION CONTROL — Report – Chemistry Laboratory

Date Received: [illegible]
Date Reported: 03-09-15
Station: GMC [illegible]-001
Sample Type: Monthly ☐ Compliance ☑ Litigation ☐ WQPA Survey ☐ Complaint ☐ B-WQ Survey ☐
Sample Collected By: [illegible]
Report Analysis To: [illegible]
CO ☐ NEDO ☑ NWDO ☐ SEDO ☐ SWDO ☐ CDO ☐ WQPA ☐

Laboratory Number: C7379
Approved By: [illegible] SC, ☐☐☐☐☐☐
Sample Type: Grab ☒ Composite ☐
Date & Time of Sample: Begin Y Y M M D D / H H M M — 15 03 15 13 15; End
Frequency & Duration of Composite Sample:

| PARAMETER | STORET CODE | RESULTS | DATE ANALYZED | ANALYST | METHOD CODE |
|---|---|---|---|---|---|
| **FIELD MEASUREMENTS** | | | | | |
| ☐ Chlorine, Free Avl., mg/l | P50064, | | | | |
| ☐ Chlorine, Total Resd., mg/l | P50060, | | | | |
| ☐ Conductivity, umhos/cm | P94, | 2730 | | | |
| ☐ Dissolved Oxygen, mg/l | P299, | 4.0 | | | |
| ☐ Flow, CFS | P61, | [illegible] | | | |
| ☐ pH, SU | P400, | 7.7 | | | |
| ☑ Temperature, Water, °C | P10, | 13.0 | | | |
| ☐ Gage Height, ft. | P65, | | | | |
| ☐ | | | | | |
| ☐ | | | | | |
| **METALS** | | | | | |
| ☐ Aluminum, Total Al, ug/l | P1105, | <200 | 3-[illegible] | HB | |
| ☐ Arsenic, Total As, ug/l | P1002, | Interference | 3/23 | PS | |
| ☐ Barium, Total Ba, ug/l | P1007, | [illegible] | 4-14 | HB | |
| ☐ Cadmium, Total Cd, ug/l | P1027, | 0.6 | 3/16 | PS | |
| ☐ Calcium, Total Ca, mg/l | P916, | 362 | 4-9 | HB | |
| ☐ Chromium, Hex Cr, ug/l | P1032, | | | | |
| ☐ Chromium, Total Cr, ug/l | P1034, | 260 | 4-8 | HB | |
| ☐ Copper, Total Cu, ug/l | P1042, | 125 | 4-11 | BK | |
| ☐ Iron, Diss, Fe, ug/l | P1046, | | | | |
| ☐ Iron, Total Fe, ug/l | P1045, | 910 | 4-8 | HB | |
| ☐ Lead, Total Pb, ug/l | P1051, | 9 | 3/17 | PS | |
| ☐ Magnesium, Total Mg, mg/l | P927, | 13.2 | 4-11 | HB | |
| ☐ Manganese, Total Mn, ug/l | P1055, | | | | |
| ☐ Mercury, Total Hg, ug/l | P71900, | | | | |
| ☐ Nickel, Total Ni, ug/l | P1067, | 320 | 4-6 | BK | |
| ☐ Potassium, Total K, mg/l | P937, | | | | |
| ☐ Selenium, Total Se, ug/l | P1147, | | | | |
| ☐ Silver, Total Ag, ug/l | P1077, | | | | |
| ☐ Sodium, Total Na, mg/l | P929, | 300 | 4-1 | HB | |
| ☐ Strontium | P1082, | | | | |
| ☐ Zinc, Total, ug/l | P1092, | 470 | 4-5 | BK | |
| ☐ | | | | | |

| NON-METALS | STORET CODE | RESULTS | DATE ANALYZED | ANALYST | METHOD CODE |
|---|---|---|---|---|---|
| ☐ Acidity, Total $CaCO_3$ mg/l | P70508, | | | | |
| ☐ Alkalinity, Total $CaCO_3$ mg/l | P410, | | | | |
| ☑ BOD, 5-day, mg/l | P310, | 15 | 3-14 | BM | |
| ☑ cBOD, 5 Day, mg/l | P80082, | 12 | 3-14 | BM | |
| ☐ BOD, 20 Day, mg/l | P324, | | | | |
| ☐ cBOD, 20 Day, mg/l | P80087, | | | | |
| ☐ MBAS, mg/l | P38260, | | | | |
| ☐ Carbon, Total Org., mg/l | P680, | | | | |
| ☑ COD, mg/l | P335, | 129 | 4-1 | SPW | |
| ☑ Chloride, Cl, mg/l | P940, | [illegible] | [illegible] | MK | |
| ☑ Conductivity at 25°C, umhos/cm | P95, | 3400 | 3/22 | BN | |
| ☑ Cyanide, Total, mg/l | P720, | Interference | 3-28 | MH | |
| ☐ Fluoride, F, mg/l | P951, | | | | |
| ☑ Hardness, Total as $CaCo_3$ mg/l | P900, | 156 | 4-8 | KH | |
| ☑ Nitrate-Nitrite, as N, mg/l | P620, | <0.10 | 3-27 | MH | |
| ☑ Nitrite, as N, mg/l | P615, | [illegible] | [illegible] | AK | |
| ☑ Nitrogen, Ammonia as N, mg/l | P610, | 1.23 | 3-23 | MH | |
| ☑ Nitrogen, Total Kjeldahl, mg/l | P625, | 6.6 | 3/4 | HB | |
| ☑ Oil and Grease, mg/l | P556, | <1.0 | 3-16 | BN | |
| ☐ pH, SU | P403, | | | | |
| ☑ Phenolics, ug/l | P32730, | 250 | [illegible] | SPW | |
| ☐ Phosphorus, Diss. P, mg/l | P666, | | | | |
| ☑ Phosphorus, Total P, mg/l | P665, | [illegible] | 3/21 | HB | |
| ☐ Residue, Total, mg/l | P550, | | | | |
| ☑ Residue, Total Flt, mg/l | P70300, | 2830 | 3-21 | BM | |
| ☑ Residue, Total Nflt, mg/l | P530, | 11 | 3-21 | BM | |
| ☐ Silica, Dissolved, mg/l | P955, | | | | |
| ☑ Sulfate, $SO_4$, mg/l | P945, | 117 | 3-24 | MR | |
| ☐ | | | | | |
| ☐ | | | | | |
| **MICROBIOLOGY** | | | | | |
| ☐ Fecal Coliform, MF, #/100 ml | P31616, | | | | |
| ☐ Fecal Strep, MF # / 100 ml | P31679, | | | | |
| ☐ | | | | | |

Comments: CORRECTED FROM LAB

PLEASE METAL

**PRESERVATIVES**
☑ NaOH ☐ $K_2Cr_2O_7$ ☑ N/P
☑ $H_2SO_4$ ☐ $CuSO_4$-$H_3PO_4$
☐ $HNO_3$ ☐ Other

DISTRIBUTION: WHITE-LAB, GREEN-PERMITS, CANARY-STORET, PINK-DISTRICT, GOLDENROD-DISTRICT

EPA 4700

Re: NPDES Permit No. S 301 *BD

Mr. J. W. Canan, Plant Engineer
GMC - Fisher Body Division
Elyria Plant
P.O. Box 4025
Elyria, Ohio 44036

December 14, 1979

Attention: M. A. Husar

Gentlemen:

We are in receipt of your October 1979, Monthly Operating Report. Upon inspection we have noticed some excursions of permit limits as follows:

| Outfall | Parameter (Units) | Permit | Reported | Day |
|---|---|---|---|---|
| 001 | Total Nickel (mg/l) | 0.5 | 0.522 | Mo. Avg. |
| 601 | Total Nickel (mg/l) | 0.5 | 0.567 | Mo. Avg. |

We understand that a hole in a Nickel holding tank caused excessive amounts of Nickel to be sent to the treatment system. This explanation appears satisfactory at this time; however, please be advised that such instances of noncompliance may be subject to further enforcement action.

Per our conversations with M. Husar, we wish that the company would consider an alternative method for reporting raw data. Both Ohio EPA and USEPA realize that analytical results produce data that "scatters" around the true value. Measures of this scatter (standard deviation, relative error etc.) are used in determining "scientifically acceptable" deviation from the permit limits. That is to say, data may show a permit limit excursion due to scatter but, the true value may actually be within the permit limit. When the company rounds down total metal concentrations from values less than 550 ug/l to 500 ug/l it would have little effect from an Agency standpoint because data generated by Standard Methods could produce scatter within this range. When the company rounds up values from 550 ug/l to 600 ug/l, the upper value is outside the range of scatter and necessitates even closer scrutiny by this office.

We most respectfully suggest that the company report raw flow and total metal concentration data in two significant figures such that an average concentration (weighted by flow) can be calculated with two significant figures. This affords the Ohio EPA an opportunity to apply its own standards in the analysis of the data. We have taken the liberty of doing this for your October excursions listed above although the last two figures of each number are insignificant.

The current method of reporting is acceptable and reflects the company's conscious application of legal principles. However, GMC may wish to use our suggestion and afford this Agency an opportunity to prepare a more consistent analysis of the data.

If you have any questions on this matter, please advise us.

Yours truly,

Mark T. Baumgardner

Mark T. Baumgardner
Environmental Scientist - Industrial Wastewater
Northeast District Office

MTB:mjo

cc: R. Phelps, Industrial Wastewater, CO
Authorization & Compliance, NEDO
J. Januska, NEDO

Re: NPDES Permit No. S 301 *BD

Mr. J. W. Canan, Plant Engineer
GMC - Fisher Body Division
Elyria Plant
P.O. Box 4025
Elyria, Ohio 44036

November 8, 1979

Dear Mr. Canan:

We are in receipt of your letter dated September 28, 1979, which informs us of certain instances of noncompliance with the NPDES permit conditions during the month of September. The specific instances of noncompliance and/or deficiencies are as follows:

OUTFALL 001

| Parameter (Units) | Reported | Permit | Day |
|---|---|---|---|
| Total Copper (mg/l) | 5.4 | 1.0 | 23 |
| Total Chromium (mg/l) | 1.4 | 1.0 | 23 |
| Hexavalent Chromium (mg/l) | 1.0 | 0.1 | 23 |

The explanations provided in said letter for the instances of noncompliance appear satisfactory at this time. However, please be advised that such instances of noncompliance may be subject to further enforcement action pursuant to the Ohio Revised Code, Chapter 6111.

If you have any questions regarding the above, please contact the writer at 425-9171.

Yours truly,

Mark T. Baumgardner

Mark T. Baumgardner
Environmental Scientist

MTB:mjo

cc: Authorization & Compliance, NEDO
R. Phelps, Industrial Wastewater, CO

OHIO ENVIRONMENTAL PROTECTION AGENCY

TELEPHONE MEMORANDUM

WITH MIKE HUSAR DATE 5-8-79

REPRESENTING G.M.C. - FISHER BODY, ELYRIA TIME 2:15

PERMIT NO. S 301 PHONE 329-1256

OEPA STAFF BILL BUSH

SUBJECT 5-7-79 NONCOMPLIANCE LETTER

NOTES & SUMMARY: FOLLOW-UP DATE

THE 3-1-79 SELF-MONITORING ANALYTICAL RESULT FOR FREE CYANIDE ON OUTFALL 601 WAS REPORTED AS "01". ALTHOUGH THIS WAS ACTUALLY A DELETED DECIMAL POINT INDICATING .01 mg/l CN, IT WAS KEPUNCHED AS 1 mg/l. THIS RESULTED IN APPARENT DAILY AND MONTHLY VIOLATIONS FOR FREE CYANIDE ON 601. TO FURTHER CONFUSE THE SITUATION, THE 5-7-79 LETTER SENT FROM THE NORTHEAST DISTRICT STATED THAT THE EXCURSION OCCURRED ON 001. FISHER BODY HAD NO PERMIT VIOLATIONS FOR THE MONTH OF MARCH, 1979.

CC: MIKE HUSAR, G.M.C.
BOB PHELPS, CO
SANDY THOMPSON, CO

Signature William T. Bush

OEPA-INDWW-3

VIOLATIONS FOR CYANIDE : OUTFALL 601

DAILY MAX. 0.1 mg/l

| | | | |
|---|---|---|---|
| 12-18 | 0.13 mg/l | 1-28 | 0.26 mg/l |
| 1-10 | 0.13 mg/l | 2-4 | 0.21 mg/l |
| 1-14 | 0.12 mg/l | 2-6 | 0 |
| 1-16 | 0.19 mg/l | | |
| 1-22 | 0.24 mg/l | | |
| 1-25 | 0.21 mg/l | | |

MONTHLY AVG. 0.05 mg/L

NOVEMBER 0.07 mg/L

JANUARY 0.13 mg/l

(7 DEC)

1. No detectable levels in MBW
2. Found in blending tank and clarifiers => LIME
3. HClO4 not destroying CN => INCREASED LEVELS => NEW + UNKNOWN MATERIALS IN LIME => NEW VENDOR
4. SPLIT SAMPLES FOR ANALYSIS

(4 JAN)

1. HIGH readings attributed to interferences - "no conclusive data" "acetylene-sulfide"

(21 JAN)

1. Causes still unknown
2. Split with independent lab confirmed analysis ~~(low levels)~~
3. Incoming supply line (lime + MBW) to independent lab -> low levels
4. : interferences: ~~are~~ conc. on proving them

report in two months.

(30JAN)

1. latest results => lime ↑HClO⊖ not effective
2. => interferences
3. review back up processes, sampling techniques chemicals

(Feb 8)

1. Nickel READINGS AS MO. AVG. WERE HIGH. DUE TO LEAK IN NICKEL PLATING TANK - LEAK REPAIRED
2. REVIEW backup PROCESSES, SAMPLING TECHNIQUES, CHEMICALS

(FEB) 28

1. Outside consulting-firm hired

(6 Mar 1980)

1. Cyanide - Monthly avg over limit but daily max w/i limits in last week of Feb. Consultant has not finished report on problem.

2. Copper - Higher than avg conc to treatment system. Treatment system efficiency reduced because of the use of different lime related to cyanide problem.

SAMPLER CHECKLIST

ALL LOW CONCENTRATION SAMPLES

Site Name GMC FISCHER BODY DIV. ELYRIA PLT.

All the below procedures have been followed and all coolers properly packaged for shipment.

Randy Livingston
Sampler Signature

Cindy Salvatti
Team Leader Signature

✓ 1. Is date shipped filled in on the OTR/ITR?

✓ 2. Is date and time of sample collection (Letter "F) filled in on the OTR/ITR?

✓ 3. Has either Shipment Complete or Shipment Not Complete been marked on the OTR/ITR?

✓ 4. On the C.O.C. form, is PAN in project no.; TDD/Case/SAS (if applicable) in project name for CLP and site name/case for CRL?

✓ 5. Are all dates and times on the C.O.C. form?

✓ 6. Has either grab or composite sample been marked on the C.O.C.?

✓ 7. Is the matrix filled out on each line of the C.O.C. form? (i.e., Soil, Water, Drinking Water) DO NOT USE ARROWS.

✓ 8. Is the Cooler # written on top of the C.O.C. form?

✓ 9. Is it referenced on the C.O.C.s which cooler # the OTR/ITR or the CRL tracking forms are in?

✓ 10. Are relinquish date, time, and signature on the bottom of the C.O.C.?

✓ 11. Is there one C.O.C. per cooler?

✓ 12. Has the proper paperwork been put in a plastic bag and taped to the inside of the cooler lid?

- o C.O.C. - Send white copy, bring back pink and yellow.
- o OTR/ITR - Send white and yellow copies and bring back blue/green and pink.
- o CRL tracking forms - send all of them.

SA002(04/18/90)

✓ 13. Is sample number, date, and time of collection permanently labeled on each sample bottle?

✓ 14. Are samples packaged in such a way to prevent breakage?

✓ 15. Have photographs been taken of each cooler showing ice, custody seals, and paperwork?

✓ 16. Are the coolers acceptable at Fed Ex?

- o Condition
- o Drain plug taped
- o Correctly labeled with address stickers

✓ 17. Are you sending the coolers to the correct lab? Are you using the correct lab acronym?

✓ 18. Did you call the SMC <u>before 10:00 a.m.</u> on the day after the sample shipment?

ONLY APPLIES TO WATERS

_____ 1. On the OTR/ITR forms, is the Sample Blank marked rinsate (4) in sample description (Letter "A").

_____ 2. For monitoring wells, has it been stated on the bottom of the inorganic C.O.C. whether the metals were filtered or not?

_____ 3. On the OTR/ITR forms, "blank" should be written under special handling (Letter "D") and on OTR, MSD should be marked in the same location.

_____ 4. Have the preservatives been written on the C.O.C. next to the bottle volume?

| | |
|---|---|
| $HNO_3$ for Metals | $K_2Cr_2O_7$, $+HNO_3$ for Hg |
| NaOH for CN | HCL for VOA |

_____ 5. Are sample water levels marked with a grease pencil on all sample bottles except for VOA?

SAMPLE DESCRIPTION

SITE NAME GMC FISCHER BODY DIVISION - ELYRIA PLANT

TDD# F05-9004-011

CASE NUMBER 14906

SAMPLE #/STATION LOCATION S1

LOCATION DESCRIPTION NA

SAMPLING DATE 9/18/90 SAMPLING TIME 1150

ORGANIC TRAFFIC NUMBER EKH 56

INORGANIC TRAFFIC NUMBER MEKS 56

| BOTTLE | ANALYSIS | TAG NUMBERS | LOT NUMBER |
|---|---|---|---|
| 120 ml. | VOA | 132351 | W0172013 |
| 120 ml. | VOA | 132352 | W0172013 |
| 8 oz. | ABN/PEST/PCB | 132353 | 0137013 |
| 8 oz. | METALS/CN- | 132354 | 0137013 |
| | | | |
| | | | |
| | | | |
| | | | |
| | | | |

PHYSICAL DESCRIPTION AT TIME OF COLLECTION: Brown and Blue Clay wet.

PHYSICAL CHANGES FROM TIME OF COLLECTION UNTIL SHIPMENT: NONE

INSTRUMENT READINGS NONE

pH

CONDUCTIVITY NA

TEMPERATURE

SAMPLE DESCRIPTION

SITE NAME GMC FISCHER BODY DIVISION - ELYRIA PLANT

TDD# F05-9004-011

CASE NUMBER 14906

SAMPLE #/STATION LOCATION S2

LOCATION DESCRIPTION NA

SAMPLING DATE 9/18/90 SAMPLING TIME 12 45

ORGANIC TRAFFIC NUMBER EKH 57

INORGANIC TRAFFIC NUMBER MEKS 57

| BOTTLE | ANALYSIS | TAG NUMBERS | LOT NUMBER |
|---|---|---|---|
| 120 ml. | VOA | 132355 | W0172013 |
| 120 ml. | VOA | 132356 | W0172013 |
| 8 oz. | ABN/PEST/PCB | 132357 | 0137013 |
| 8 oz. | METALS/CN- | 132358 | 0137013 |
| | | | |
| | | | |
| | | | |
| | | | |
| | | | |

PHYSICAL DESCRIPTION AT TIME OF COLLECTION: Brown and Blue Clay wet.

PHYSICAL CHANGES FROM TIME OF COLLECTION UNTIL SHIPMENT: NONE

INSTRUMENT READINGS NONE

pH

CONDUCTIVITY

TEMPERATURE

N/A

SAMPLE DESCRIPTION

SITE NAME GMC FISCHER BODY DIVISION - ELYRIA PLANT

TOD# F05-9004-011

CASE NUMBER 14906

SAMPLE #/STATION LOCATION S3

LOCATION DESCRIPTION NA

SAMPLING DATE 9/18/90 SAMPLING TIME 1355

ORGANIC TRAFFIC NUMBER EKH 58

INORGANIC TRAFFIC NUMBER MEKS 58

| BOTTLE | ANALYSIS | TAG NUMBERS | LOT NUMBER |
|---|---|---|---|
| 120 ml. | VOA | 132359 | W0172013 |
| 120 ml. | VOA | 132360 | W0172013 |
| 8 oz. | ABN/PEST/PCB | 132361 | 0137013 |
| 8 oz. | METALS/CN- | 132362 | 0137013 |
| | | | |
| | | | |
| | | | |
| | | | |
| | | | |

PHYSICAL DESCRIPTION AT TIME OF COLLECTION: Brown Soil and Clay, with a Blue substance.

PHYSICAL CHANGES FROM TIME OF COLLECTION UNTIL SHIPMENT: NONE

INSTRUMENT READINGS NONE

pH

CONDUCTIVITY

TEMPERATURE

N/A

SAMPLE DESCRIPTION

SITE NAME GMC FISCHER BODY DIVISION - ELYRIA PLANT

TDD# F05-9004-011

CASE NUMBER 14906

SAMPLE #/STATION LOCATION S 4

LOCATION DESCRIPTION NA

SAMPLING DATE 9/18/90 SAMPLING TIME 1435

ORGANIC TRAFFIC NUMBER EKH 59

INORGANIC TRAFFIC NUMBER MEKS 59

| BOTTLE | ANALYSIS | TAG NUMBERS | LOT NUMBER |
|---|---|---|---|
| 120 ml. | VOA | 132363 | W0172013 |
| 120 ml. | VOA | 132364 | W0172013 |
| 8 oz. | ABN/PEST/PCB | 132365 | 0137013 |
| 8 oz. | METALS/CN- | 132366 | 0137013 |
| | | | |
| | | | |
| | | | |
| | | | |
| | | | |

PHYSICAL DESCRIPTION AT TIME OF COLLECTION: Bluish soil.

PHYSICAL CHANGES FROM TIME OF COLLECTION UNTIL SHIPMENT: NONE.

INSTRUMENT READINGS NONE.

pH

CONDUCTIVITY

TEMPERATURE

NA

SAMPLE DESCRIPTION

SITE NAME GMC FISCHER BODY DIVISION - ELYRIA PLANT

TOD# F05-9004-011

CASE NUMBER 14906

SAMPLE #/STATION LOCATION S5

LOCATION DESCRIPTION NA

SAMPLING DATE 9/18/90 SAMPLING TIME 1515

ORGANIC TRAFFIC NUMBER EKH 60

INORGANIC TRAFFIC NUMBER MEKS 60

| BOTTLE | ANALYSIS | TAG NUMBERS | LOT NUMBER |
|---|---|---|---|
| 120 ml. | VOA | 132367 | W0172013 |
| 120 ml. | VOA | 132368 | W0172013 |
| 8 oz. | ABN/PEST/PCB | 132369 | 0137013 |
| 8 oz. | METALS/CN- | 132370 | 0137013 |
| | | | |
| | | | |
| | | | |
| | | | |
| | | | |

PHYSICAL DESCRIPTION AT TIME OF COLLECTION: Brown Soil with white specks.

PHYSICAL CHANGES FROM TIME OF COLLECTION UNTIL SHIPMENT: NONE.

INSTRUMENT READINGS NONE.

pH

CONDUCTIVITY

TEMPERATURE

NA

SAMPLE DESCRIPTION

SITE NAME GMC FISCHER BODY DIVISION - ELYRIA PLANT

TDD# F05-9004-011

CASE NUMBER 14906

SAMPLE #/STATION LOCATION S 6

LOCATION DESCRIPTION NA

SAMPLING DATE 9/18/90 SAMPLING TIME 1555

ORGANIC TRAFFIC NUMBER EKH 61

INORGANIC TRAFFIC NUMBER MEKS 61

| BOTTLE | ANALYSIS | TAG NUMBERS | LOT NUMBER |
|---|---|---|---|
| 120 ml. | VOA | 132371 | W0172013 |
| 120 ml. | VOA | 132372 | W0172013 |
| 8 oz. | ABN/PEST/PCB | 132373 | 0137013 |
| 8 oz. | METALS/CN- | 132374 | 0137013 |
| | | | |
| | | | |
| | | | |
| | | | |
| | | | |

PHYSICAL DESCRIPTION AT TIME OF COLLECTION: Brown soil with White Specks.

PHYSICAL CHANGES FROM TIME OF COLLECTION UNTIL SHIPMENT: NONE.

INSTRUMENT READINGS NONE.

pH

CONDUCTIVITY

TEMPERATURE

NA

SAMPLE DESCRIPTION

SITE NAME GMC FISCHER BODY DIVISION - ELYRIA PLANT

TDD# F05-9004-011

CASE NUMBER 14906

SAMPLE #/STATION LOCATION S 7

LOCATION DESCRIPTION NA

SAMPLING DATE 9/18/90 SAMPLING TIME 1630

ORGANIC TRAFFIC NUMBER EKH 62

INORGANIC TRAFFIC NUMBER MEKS 62

| BOTTLE | ANALYSIS | TAG NUMBERS | LOT NUMBER |
|---|---|---|---|
| 120 ml. | VOA | 132375 | WD172013 |
| 120 ml. | VOA | 132376 | WD172013 |
| 8 oz. | AGN/PEST/PCB | 132377 | 0137013 |
| 8 oz. | METALS/CN- | 132378 | 0137013 |
| | | | |
| | | | |
| | | | |
| | | | |
| | | | |

PHYSICAL DESCRIPTION AT TIME OF COLLECTION: Brown and Gray Clay.

PHYSICAL CHANGES FROM TIME OF COLLECTION UNTIL SHIPMENT: NONE.

INSTRUMENT READINGS NONE.

pH

CONDUCTIVITY

TEMPERATURE

NA

FIT SAMPLE PROPOSAL FORM REGION V

DATE FORM COMPLETED 8/15/90 PAN# FDH033158 TDD# F05-9004-011 EPA I.D.# OHD004201091

SITE NAME (PRINT) GMC FISCHER BODY DIVISION-ELYRIA PLANT CITY ELYRIA STATE OHIO

TEAM LEADER C. Schultz SAMPLER R. LIVINGSTON DATE SENT TO RSCC

CASE # 14906 DRINKING WATER SAS # ORGANIC INORGANIC

ROUTINE ANALYTICAL SERVICES (RAS)

| LOW WATERS FRACTION | MONITORING WELLS NUMBER OF FIELD SAMPLES+ BLANKS+ DUPLICATE= TOTAL | EXPECTED DATE TO SAMPLE | LABORATORY NAME | NUMBER OF COOLERS SHIPPED | NUMBER OF SAMPLES SHIPPED | AIR BILL NUMBERS | DATE SHIPPED TO LAB |
|---|---|---|---|---|---|---|---|
| VOA | | | | | | | |
| ABNs | | | | | | | |
| PEST/PCB | | | | | | | |
| METALS | | | | | | | |
| CN | | | | | | | |

| LOW WATERS FRACTION | SURFACE WATERS NUMBER OF FIELD SAMPLES+ BLANKS+ DUPLICATE= TOTAL | EXPECTED DATE TO SAMPLE | LABORATORY NAME | NUMBER OF COOLERS SHIPPED | NUMBER OF SAMPLES SHIPPED | AIR BILL NUMBERS | DATE SHIPPED TO LAB |
|---|---|---|---|---|---|---|---|
| VOA | | | | | | | |
| ABNs | | | | | | | |
| PEST/PCB | | | | | | | |
| METALS | | | | | | | |
| CN | | | | | | | |

| LOW SOILS/SEDIMENTS/SLUDGES FRACTION | NUMBER OF FIELD SAMPLES+ BLANKS+ DUPLICATE= TOTAL | EXPECTED DATE TO SAMPLE | LABORATORY NAME | NUMBER OF COOLERS SHIPPED | NUMBER OF SAMPLES SHIPPED | AIR BILL NUMBERS | DATE SHIPPED TO LAB |
|---|---|---|---|---|---|---|---|
| VOA | | | | | | | |
| ABNs | 7+0 = 7 | WEEK OF Sept. 17, 1990 | S3 | 1 | 7 | 9157648356 | 9/18/90 |
| PEST/PCB | | | BLTZ (IV) | 1 | 7 | 9157648345 | |
| METALS | | | | | | | |
| CN | | | | | | | |

RESIDENTIAL/ MUNICIPAL WELL WATERS (DRINKING WATER SAMPLES)

| LOW DETECTION LIMITS/FAST TURN AROUND FRACTION | NUMBER OF FIELD SAMPLES+ BLANKS+ DUPLICATE= TOTAL | EXPECTED DATE TO SAMPLE | LABORATORY NAME | NUMBER OF COOLERS SHIPPED | NUMBER OF SAMPLES SHIPPED | AIR BILL NUMBERS | DATE SHIPPED TO LAB |
|---|---|---|---|---|---|---|---|
| VOA | | | | | | | |
| ABNs | | | | | | | |
| PEST/PCB | | | | | | | |
| METALS | | | | | | | |
| CN | | | | | | | |

I _____ SEE NEXT PAGE FOR SPECIAL ANALYTICAL SERVICE REQUEST FOR THIS SITE

SAS #

Complete

Confirmed

FEDERAL EXPRESS

QUESTIONS? CALL 800-238-5355 TOLL FREE.

AIRBILL PACKAGE TRACKING NUMBER 9157640356

1GA 9157640356

Express Account Number

1410-1910-1

Date 7/15/92

SENDER'S COPY

From (Your Name, Phone No.)

Department/Floor No.

ECOLOGY & ENVIRONMENT

5604 NORTHWEST HWY

CHICAGO

To (Recipient's Name, Phone No.)

Company

Department/Floor No.

Address

City

Your Internal Billing Reference Information (For Accounting Use Only)

Payment: Sender Recipient Third Party Credit Card Cash/Check

Service Commitment Date

Time

Total Charges

Delivery Time Charge

Other Charges

Total Charges

Delivery Signature (Optional)

Sender's Signature (Required)

Date

Sender's Phone No.

Recipient's Signature (Optional)

Date

Recipient's Phone No.

Sender's Signature (Required)

Date

Sender's Phone No.

Recipient's Signature (Optional)

Date

Recipient's Phone No.

SENDER'S COPY

FEDERAL EXPRESS

QUESTIONS? CALL 800-238-5355 TOLL FREE.

AIRBILL PACKAGE TRACKING NUMBER 9157640348

1GA 9157640348

Express Account Number

1410-1910-1

Date 7/15/92

SENDER'S COPY

From (Your Name, Phone No.)

Department/Floor No.

ECOLOGY & ENVIRONMENT

5604 NORTHWEST HWY

CHICAGO

To (Recipient's Name, Phone No.)

Company

Department/Floor No.

Address

City

Your Internal Billing Reference Information (For Accounting Use Only)

Payment: Sender Recipient Third Party Credit Card Cash/Check

Service Commitment Date

Time

Total Charges

Delivery Time Charge

Other Charges

Total Charges

Delivery Signature (Optional)

Sender's Signature (Required)

Date

Sender's Phone No.

Recipient's Signature (Optional)

Date

Recipient's Phone No.

Sender's Signature (Required)

Date

Sender's Phone No.

Recipient's Signature (Optional)

Date

Recipient's Phone No.

RESULTS OF CHEMICAL ANALYSIS OF
FIT-COLLECTED SOIL SAMPLES

CK 12/04/90

| Sample Collection Information and Parameters | S-1 | S-2 | S-3 | S-4 | S-5 | S-6 | S-7 (BKG) | 8 | 9 | 10 | 11 | 12 |
|---|---|---|---|---|---|---|---|---|---|---|---|---|
| Date | 9/18/90 | 9/18/90 | 9/18/90 | 9/18/90 | 9/18/90 | 9/18/90 | 9/18/90 | | | | | |
| Time | 1150 | 1245 | 1355 | 1435 | 1515 | 1555 | 1630 | | | | | |
| ~~Well Depth (feet)~~ | NA | | | | | | | | | | | |
| ~~CRL Log Number~~ | | | | | | | | | | | | |
| CLP Organic Traffic Report Number | EKH 56 | EKH 57 | EKH 58 | EKH 59 | EKH 60 | EKH 61 | EKH 62 | | | | | |
| CLP Inorganic Traffic Report Number | MEKS 56 | MEKS 57 | MEKS 58 | MEKS 59 | MEKS 60 | MEKS 61 | MEKS 62 | | | | | |
| Temperature (°C) | | | | | | | | | | | | |
| Specific Conductivity (µmhos/cm) | N/A | | | | | | | | | | | |
| pH | | | | | | | | | | | | |

| Physical State* | Waste Characteristics* | Category** | SI Memo | Compound Detected (values in ~~µg/L or~~ µg/kg) Volatile Organics | S-1 | S-2 | S-3 | S-4 | S-5 | S-6 | S-7 | 8 | 9 | 10 | 11 | 12 |
|---|---|---|---|---|---|---|---|---|---|---|---|---|---|---|---|---|
| Gas | A,D,G,I | OCC | HH | chloroethane | | | | | | | | | | | | |
| Gas | A,D,G,I | OCC | HH | bromoethane | | | | | | | | | | | | |
| Gas | A,D,G,I | OCC | HH | vinyl chloride | | | | | | | | | | | | |
| Gas | A,D,G,I | OCC | HH | chloroethane | | | | | | | | | | | | |
| Liquid | A,D,H,I | SOL | HH, CLA | methylene chloride | -- | -- | -- | 35J | -- | -- | -- | | | | | |
| Liquid | E,H,I,A | SOL | K, CLA | acetone | | | | | | | | | | | | |
| Liquid | A,H,I | SOL | SH | carbon disulfide | | | | | | | | | | | | |
| Liquid | A,D,G,I | SOL | HH | 1,1-dichloroethene | | | | | | | | | | | | |
| Liquid | A,D,H,G | SOL | HH | 1,1-dichloroethane | | | | | | | | | | | | |
| Liquid | A,D,G | SOL | HH | 1,2-dichloroethene (total) | | | | | | | | | | | | |
| Liquid | A,D | SOL | HH | chloroform | | | | | | | | | | | | |
| Liquid | A,D,G | SOL | HH | 1,2-dichloroethane | | | | | | | | | | | | |
| Liquid | A,E,G | SOL | K, CLA | 2-butanone (MEK) | | | | | | | | | | | | |
| Liquid | A,D | SOL | HH | 1,1,1-trichloroethane | | | | | | | | | | | | |
| Liquid | A,D | SOL | HH | carbon tetrachloride | | | | | | | | | | | | |
| Liquid | A,D,G | SOL | HYD | vinyl acetate | | | | | | | | | | | | |
| Liquid | A,D | OCC | HH | bromodichloroethane | | | | | | | | | | | | |
| Liquid | A,D,G | SOL | HH | 1,2-dichloropropane | | | | | | | | | | | | |
| Liquid | A,D,G | SOL | HH | cis-1,3-dichloropropene | | | | | | | | | | | | |
| Liquid | A,D,G,B | SOL | HH | trichloroethene | -- | -- | -- | -- | 8 | 1J | -- | | | | | |
| Liquid | A,D | OCC | HH | dibromochloroethane | | | | | | | | | | | | |
| Liquid | A,D | SOL | HH | 1,1,2-trichloroethane | | | | | | | | | | | | |
| Liquid | A,G | SOL | A | benzene | | | | | | | | | | | | |
| Liquid | A,D,G | SOL | HH | trans-1,3-dichloropropene | | | | | | | | | | | | |
| Liquid | A,D | SOL | HH, CLA | bromoform | | | | | | | | | | | | |
| Liquid | A,E,G | SOL | K, CLA | 4-methyl-2-pentanone | | | | | | | | | | | | |
| Liquid | A,E,G | SOL | K | 2-hexanone | | | | | | | | | | | | |
| Liquid | A,D | SOL | HH | tetrachloroethene | -- | -- | 9J | -- | 5J | 25J | 12J | | | | | |
| Liquid | A,G,E | SOL | A, CLA | toluene | -- | -- | -- | -- | -- | 3J | -- | | | | | |
| Liquid | A,D,E | SOL | HH | 1,1,2,2-tetrachloroethane | | | | | | | | | | | | |
| Liquid | A,D,G | SOL | HA | chlorobenzene | | | | | | | | | | | | |
| Liquid | A,G | SOL | A | ethylbenzene | | | | | | | | | | | | |
| Liquid | A,D,G | OCC | A | styrene | | | | | | | | | | | | |
| Liquid | A,G | SOL | A | xylenes (total) | | | | | | | | | | | | |

Table 4-1 (Cont.)

| Physical State* | Waste Characteristics** | Category*** | SI Memo | Sample Collection Information and Parameters | Sample Number 1 | 2 | 3 | 4 | 5 | 6 | 7 | 8 | 9 | 10 | 11 | 12 |
|---|---|---|---|---|---|---|---|---|---|---|---|---|---|---|---|---|
| | | | | Semivolatile Organics | | | | | | | | | | | | |
| S, thick L | A,B,E | OCC | P | phenol | | | | | | | | | | | | |
| Liquid | A,D,B | OCC | HH | bis(2-chloroethyl)ether | | | | | | | | | | | | |
| Liquid | A,D,B | OCC | P | 2-chlorophenol | | | | | | | | | | | | |
| Liquid | A,D,H | SOL | HA | 1,3-dichlorobenzene | | | | | | | | | | | | |
| Solid | A,D,H | OCC | HA | 1,4-dichlorobenzene | | | | | | | | | | | | |
| Liquid | A,D,H | SOL | A | benzyl alcohol | | | | | | | | | | | | |
| Liquid | A,D,H | OCC | HA | 1,2-dichlorobenzene | | | | | | | | | | | | |
| Liquid | A,B | OCC | P | 2-methylphenol | | | | | | | | | | | | |
| | A,D | OCC | HH | bis(2-chloroisopropyl)ether | | | | | | | | | | | | |
| Liquid | A,B | OCC | P | 4-methylphenol | | | | | | | | | | | | |
| | A | OCC | H-Amine | n-nitroso-di-n-dipropylamine | | | | | | | | | | | | |
| Solid | A,D | OCC | HH | hexachloroethane | | | | | | | | | | | | |
| Liquid | A,D | OCC | HA | nitrobenzene | | | | | | | | | | | | |
| Liquid | A,D | OCC | H | isophorone | | | | | | | | | | | | |
| Solid | A,D | OCC | P | 2-nitrophenol | | | | | | | | | | | | |
| Solid | A,B | OCC | P | 2,4-dimethylphenol | | | | | | | | | | | | |
| Solid | A | OCC | A | benzoic acid | | | | | | | | | | | | |
| | A,D | OCC | HH | bis(2-chloroethoxy)methane | | | | | | | | | | | | |
| Liquid | A,D | OCC | P | 2,4-dichlorophenol | | | | | | | | | | | | |
| Liquid | A,D | OCC | HA | 1,2,4-trichlorobenzene | | | | | | | | | | | | |
| Solid | A | OCC | PAH | naphthalene | | | | | | | | | | | | |
| Solid | A,D | OCC | HH | 4-chloroaniline | | | | | | | | | | | | |
| Liquid | A,D,B | OCC | HH | hexachlorobutadiene | | | | | | | | | | | | |
| Solid | A,D | OCC | P | 4-chloro-3-methylphenol | | | | | | | | | | | | |
| Liquid | A,D | OCC | PAH | 2-methylnaphthalene | | | | | | | | | | | | |
| Liquid | A,D,B | OCC | HH | hexachlorocyclopentadiene | | | | | | | | | | | | |
| Solid | A,D | OCC | P | 2,4,6-trichlorophenol | | | | | | | | | | | | |
| Solid | A,D | OCC | P | 2,4,5-trichlorophenol | | | | | | | | | | | | |
| Liquid | A,D | OCC | PAH | 2-chloronaphthalene | | | | | | | | | | | | |
| Solid | A,D | OCC | HH | 2-nitroaniline | | | | | | | | | | | | |
| Liquid | A,D | OCC | PH,CLA | dimethylphthalate | | | | | | | | | | | | |
| Solid | A,D | OCC | PAH | acenaphthylene | | | | | | | | | | | | |
| Solid | A,D | OCC | HA | 2,6-dinitrotoluene | | | | | | | | | | | | |
| Solid | A,D | OCC | HH | 3-nitroaniline | | | | | | | | | | | | |
| Solid | A,D | OCC | PAH | acenaphthene | | | | | | | | | | | | |
| Solid | A,D,G | OCC | P | 2,4-dinitrophenol | | | | | | | | | | | | |
| Solid | A,D | OCC | P | 4-nitrophenol | | | | | | | | | | | | |
| Solid | A,D | OCC | A | dibenzofuran | | | | | | | | | | | | |
| Solid | A,D | OCC | HA | 2,4-dinitrotoluene | | | | | | | | | | | | |
| Liquid | A,D | OCC | PH | diethylphthalate | | | | | | | | | | | | |
| | A,D | OCC | HH | 4-chlorophenyl-phenylether | | | | | | | | | | | | |
| Solid | A,D | OCC | PAH | fluorene | | | | | | | | | | | | |
| Solid | A,D,E | OCC | HH | 4-nitroaniline | | | | | | | | | | | | |
| Solid | A,D | OCC | P | 4,6-dinitro-2-methylphenol | | | | | | | | | | | | |
| Solid | A,D | OCC | HH | n-nitrosodiphenylamine | | | | | | | | | | | | |
| Liquid | A,D | OCC | HH | 4-bromophenyl-phenylether | | | | | | | | | | | | |
| Solid | A,D | OCC | HA | hexachlorobenzene | | | | | | | | | | | | |
| Solid | A,D | OCC | P | pentachlorophenol | | | | | | | | | | | | |
| Solid | A,D | OCC | PAH | phenanthrene | -- | -- | -- | -- | 220J | -- | -- | | | | | |

Table 4- (Cont.)

| Physical State* | Waste Characteristics** | Category*** | SI Memo | Sample Collection Information and Parameters | S1 | S2 | S3 | S4 | S5 | S6 | S7 | 8 | 9 | 10 | 11 | 12 |
|---|---|---|---|---|---|---|---|---|---|---|---|---|---|---|---|---|
| | | | | Semivolatile Organics, Cont. | | | | | | | | | | | | |
| Solid | A,D | OCC | PAH | anthracene | | | | | | | | | | | | |
| Liquid | A,D | OCC | PH,CLA | di-n-butylphthalate | | | | | | | | | | | | |
| Solid | A,D | OCC | PAH | fluoranthene | -- | -- | -- | -- | 190J | -- | -- | | | | | |
| Solid | A,D | OCC | PAH | pyrene | -- | -- | -- | -- | 130J | -- | -- | | | | | |
| Liquid | A,D | OCC | PH,CLA | butylbenzylphthalate | | | | | | | | | | | | |
| | A,D | OCC | HA | 3,3'-dichlorobenzidine | | | | | | | | | | | | |
| Solid | A,D | OCC | PAH | benzo[a]anthracene | | | | | | | | | | | | |
| Solid | A,D | OCC | PAH | chrysene | | | | | | | | | | | | |
| Liquid | A,D | OCC | PH,CLA | bis(2-ethylhexyl)phthalate | 2300 | 650J | 870J | 3500 | 240J | -- | 300J | | | | | |
| Liquid | A,D | OCC | PH,CLA | di-n-octylphthalate | | | | | | | | | | | | |
| Solid | A,D | OCC | PAH | benzo(b)fluoranthene | | | | | | | | | | | | |
| Solid | A,D | OCC | PAH | benzo(k)fluoranthene | | | | | | | | | | | | |
| Solid | A,D,K,L | OCC | PAH | benzo[a]pyrene | | | | | | | | | | | | |
| Solid | A,D | OCC | PAH | indeno[1,2,3-cd]pyrene | | | | | | | | | | | | |
| Solid | A,D | OCC | PAH | dibenzo[a,h]anthracene | | | | | | | | | | | | |
| Solid | A,D | OCC | PAH | benzo[g,h,i]perylene | | | | | | | | | | | | |
| | | | | Pesticides/PCBs | | | | | | | | | | | | |
| Solid | A,D | PSD | PEST | alpha BHC | | | | | | | | | | | | |
| Solid | A,D | PSD | PEST | beta BHC | | | | | | | | | | | | |
| Solid | A,D | PSD | PEST | delta BHC | | | | | | | | | | | | |
| Solid | A,D | PSD | PEST | gamma BHC (Lindane) | | | | | | | | | | | | |
| Solid | A,D | PSD | PEST | Heptachlor | | | | | | | | | | | | |
| Solid | A,D | PSD | PEST | Aldrin | | | | | | | | | | | | |
| Solid | A,D | PSD | PEST | Heptachlor epoxide | | | | | | | | | | | | |
| Solid | A,D | PSD | PEST | Endosulfan I | | | | | | | | | | | | |
| Solid | A,D,E | PSD | PEST | Dieldrin | | | | | | | | | | | | |
| Solid | A,D | PSD | PEST | 4,4'-DDE | | | | | | | | | | | | |
| Solid | A,D | PSD | PEST | Endrin | -- | -- | -- | -- | 6.2J | -- | -- | | | | | |
| Solid | A,D | PSD | PEST | Endosulfan II | | | | | | | | | | | | |
| Solid | A,D | PSD | PEST | 4,4'-DDD | -- | -- | -- | -- | 110 | -- | -- | | | | | |
| Solid | A,D | PSD | PEST | Endosulfan sulfate | | | | | | | | | | | | |
| Solid | A,D | PSD | PEST | 4,4'-DDT | | | | | | | | | | | | |
| Solid | A,D | PSD | PEST | Methoxychlor (Mariate) | | | | | | | | | | | | |
| Solid | A,D | PSD | PEST | Endrin ketone | | | | | | | | | | | | |
| Solid | A,D | PSD | PEST | alpha Chlordane | | | | | | | | | | | | |
| Solid | A,D | PSD | PEST | gamma Chlordane | | | | | | | | | | | | |
| Solid | A,D | PSD | PEST | Toxaphene | | | | | | | | | | | | |
| Liquid | A,D | OCC | PCB | Aroclor 1016 | | | | | | | | | | | | |
| Liquid | A,D | OCC | PCB | Aroclor 1221 | | | | | | | | | | | | |
| Liquid | A,D | OCC | PCB | Aroclor 1232 | | | | | | | | | | | | |
| Liquid | A,D | OCC | PCB | Aroclor 1242 | | | | | | | | | | | | |
| Liquid | A,D | OCC | PCB | Aroclor 1248 | | | | | | | | | | | | |
| Liquid | A,D | OCC | PCB | Aroclor 1254 | -- | -- | 56J | -- | 770 | -- | -- | | | | | |
| Liquid | A,D | OCC | PCB | Aroclor 1260 | | | | | | | | | | | | |

Table 4- (Cont.)

CK 12/04/90

| Physical State* | Waste Characteristics** | Category*** | SI Memo | Sample Collection Information and Parameters | S 1 MEKS 56 | S 2 MEKS57 | S 3 MEKS58 | S 4 MEKS59 | S 5 MEKS60 | S 6 MEKS61 | S 7 MEKS62 (BKG.) | 8 | 9 | 10 | 11 | 12 |
|---|---|---|---|---|---|---|---|---|---|---|---|---|---|---|---|---|
| | | | | Analyte Detected (values in mg/kg ~~or µg/L~~) | | | | | | | | | | | | |
| Solid | A,D | MES | CSC/CWC | aluminum | 11100 | 20600 | 27800 | 18200 | 13700 | 17400 | 15800 | | | | | |
| Solid | A,D | MES | HM | antimony | 253NJ | 80.4NJ | 116NJ | 385NJ | R | R | R | | | | | |
| Solid | A,D | MES | HM | arsenic | 21.9NJ | 25.7NJ | 12.9NJ | 23.1NJ | 3.9NJ | 5.8NJ | 10.4NJ | | | | | |
| Solid | A,D | MES | CSC/CWC | barium | 169 | 127 | 177 | 217 | 122 | 119 | 75.7 | | | | | |
| Solid | A,D | MES | M | beryllium | 1.2B | 1.3B | 1.3B | 0.98B | 1.2 | 1B | 0.75B | | | | | |
| Solid | A,D | MES | HM | cadmium | 10.6 | 7.7 | 8.3 | 20.9 | 4.8 | 3.8 | 3.6 | | | | | |
| Solid | D | MES | CSC/CWC | calcium | 55600 | 37500 | 74000 | 176000 | 40500 | 15500 | 1210B | | | | | |
| Solid | A,D | MES | HM | chromium | 22100 | 6120 | 10000 | 34500 | 671 | 51.8 | 21.8 | | | | | |
| Solid | A,D | MES | HM | cobalt | 36.5 | 25 | 14.8B | 26.3 | 8.2B | 9.4B | 8.9B | | | | | |
| Solid | A,D | MES | HM | copper | 4370 | 1820 | 2090 | 12800 | 216 | 31.5 | 9.5 | | | | | |
| Solid | A,D | MES | HM,CSC;CWC | iron | 23600 | 35300 | 28200 | 6810 | 29300 | 25200 | 26200 | | | | | |
| Solid | A,D | MES | HM | lead | 174*J | 21*J | 44.4*J | 117*J | 7.7*J | 15.2*J | 24.9*J | | | | | |
| Solid | A,D | MES | CSC/CWC | magnesium | 4860 | 9200 | 13300 | 3680 | 9180 | 5580 | 2530 | | | | | |
| Solid | A,D | MES | HM | manganese | 397N*J | 327N*J | 467N*J | 89.2N*J | 2810N*J | 705N*J | 320N*J | | | | | |
| Liquid | A,D | MES | HM | mercury | 0.41NJ | 0.17NJ | -- | 0.45NJ | -- | -- | -- | | | | | |
| Solid | A,D | MES | HM | nickel | 9580 | 2990 | 4590 | 24300 | 669 | 38.4 | 15.9 | | | | | |
| Solid | D | MES | CSC,CWC | potassium | 1620B | 3540 | 3380 | 498B | 1650 | 1790 | 1570 | | | | | |
| Solid | A,D | MES | M | selenium | 1.3B | 0.85B | 1.6B | 3.2 | 0.33BWJ | 0.42B | 0.54B | | | | | |
| Solid | A,D | MES | HM | silver | R | R | R | 7.1NJ | R | R | R | | | | | |
| Solid | D | MES | CSC,CWC | sodium | 57.6B | 41.6B | -- | -- | 114B | 35.3B | -- | | | | | |
| Solid | A,D | MES | HM | thallium | | | | | | | | | | | | |
| Solid | A,D | MES | HM | vanadium | -- | 4.3BNJ | -- | -- | 38.8NJ | 38.2NJ | 34.5NJ | | | | | |
| Solid | A,D | MES | CWL,CSC,HM | zinc | 3360 | 1470 | 1930 | 3790 | 1010 | 115 | 81.9 | | | | | |
| Solid | A | IOC | IOC | cyanide | 30.6NJ | 8.7NJ | -- | 143NJ | -- | -- | -- | | | | | |

-- Not detected.

Table 4- (Cont.)

| COMPOUND QUALIFIERS | DEFINITION | INTERPRETATION |
|---|---|---|
| U | Indicates compound was analyzed for but not detected. | Compound was not detected at or above the CRDL. |
| J | Indicates an estimated value. | Compound value may be semiquantitative. |
| UJ | Quantitation limit is estimated due to a quality control (QC) protocol. | Compound was not detected if value is at CRQL, e.g., 10U UJ. If a value is reported with a UJ above CRQL and it is <5x blank concentration (10x for common laboratory artifacts), the compound is detected but may be a laboratory artifact and not attributable to the sample. |
| C | This flag applies to pesticide results where the identification has been confirmed by GC/MS. Single component pesticides ≥10 ng/µL in the final extract shall be confirmed by GC/MS. | Compound was confirmed by GC/MS and is quantitative. Use pesticide/PCB listed value. |
| B | This flag is used when the compound is found in the associated blank as well as in the sample. It indicates possible/probable blank contamination and warns the data user to take appropriate action. | Compound value may be semiquantitative if it is <5x the blank concentration (<10x the blank concentrations for common laboratory artifacts: phthalates, methylene chloride, acetone, toluene, 2-butanone). |
| E | This flag identifies compounds whose concentrations exceed the calibration range of the GC/MS instrument for that specific analysis. This flag will not apply to pesticides/PCBs analyzed by GC/EC methods. | Compound value may be semiquantitative. There should be another analysis with a D qualifier, which is to be used. |
| D | This flag identifies all compounds identified in an analysis at a secondary dilution factor. | Alerts data user to a possible change in the CRQL. Data is quantitative. |
| A | This flag indicates that a TIC is a suspected aldol-condensation product. | Alerts data user of a laboratory artifact in the TICs only. |
| R | Results are unusable due to a major violation of QC protocol. | Compound value is not usable. |

| ANALYTE QUALIFIERS | | DEFINITION | INTERPRETATION |
|---|---|---|---|
| E | E | Estimated or not reported due to interference. See laboratory narrative. | Analyte or element was not detected, or value may be semiquantitative. |
| S | S | Analysis by Method of Standard Additions. | Value is quantitative. |
| R | N | Spike recoveries outside QC protocols, which indicates a possible matrix problem. Data may be biased high or low. See spike results and laboratory narrative. | Value may be quantitative or semi-quantitative. |
| * | * | Duplicate value outside QC protocols which indicates a possible matrix problem. | Value may be quantitative or semiquantitative. |
| + | + | Correlation coefficient for standard additions is less than 0.995. See review and laboratory narrative. | Data value may be biased. |
| [ ] | B | Value is real, but is above instrument DL and below CRDL. | Value may be quantitative or semi-quantitative. |
| UJ | | DL is estimated because of a QC protocol. DL is possibly above or below CRDL. | Compound or element was not detected. |
| J | | Value is above CRDL and is an estimated value because of a QC protocol. | Value may be semiquantitative. |
| U | U | Compound was analyzed for but not detected. | Compound was not detected at or above the CRDL. |
| | M | Duplicate injection precision not met. | Value may be semiquantitative. |
| | W | Post-digestion spike for furnace AA analysis is out of control limits (35-115%), while sample absorbance is <50% of spike absorbance. | Value may be semiquantitative. |
| | R | Results are unusable due to a major violation of QC protocols. | Analyte value is not usable. |

Source: Ecology and Environment, Inc. 1989.

4 - 1

n samples

DATA FOR GMC

Take 4-1 FIT-COLLECTED SOIL SAMPLES

BK6

CK 12/04/90

| Physical State* | Waste Characteristics** | Category*** | SI Memo | Sample Collection Information and Parameters / Compound Detected (values in µg/L or µg/kg) | S1 | S2 | S3 | S4 | S5 | S6 | S7 | 8 | 9 | 10 | 11 | 12 |
|---|---|---|---|---|---|---|---|---|---|---|---|---|---|---|---|---|
| | | | | Date | 9/18/90 | ~~9/18/90~~ | ~~9/18/90~~ | ~~9/18/90~~ | ~~9/18/90~~ | ~~9/18/90~~ | ~~9/18/90~~ | | | | | |
| | | | | Time | 1150 | 1245 | 1355 | 1435 | 1515 | 1555 | 1630 | | | | | |
| | | | | Well Depth (feet) | NA | | | | | | | | | | | |
| | | | | CRL Log Number | | | | | | | | | | | | |
| | | | | CLP Organic Traffic Report Number | EKH 56 | EKH 57 | EKH 58 | EKH 59 | EKH 60 | EKH 61 | EKH 62 | | | | | |
| | | | | CLP Inorganic Traffic Report Number | MEKS 56 | MEKS 57 | MEKS 58 | MEKS 59 | MEKS 60 | MEKS 61 | MEKS 62 | | | | | |
| | | | | Temperature (°C) | | | | | | | | | | | | |
| | | | | Specific Conductivity (µmhos/cm) | NA | NA | NA | NA | NA | NA | NA | | | | | |
| | | | | pH | | | | | | | | | | | | |
| | | | | Volatile Organics | | | | | | | | | | | | |
| Gas | A,D,G,I | OCC | HH | chloroethane | | | | | | | | | | | | |
| Gas | A,D,G,I | OCC | HH | bromoethane | | | | | | | | | | | | |
| Gas | A,D,G,I | OCC | HH | vinyl chloride | | | | | | | | | | | | |
| Gas | A,D,G,I | OCC | HH | chloroethane | | | | | | | | | | | | |
| Liquid | A,D,H,I | SOL | HH, CLA | methylene chloride | -- | -- | -- | 35J | -- | -- | ~~TBD~~ | ~~QABLE/RESPONSES~~ | ~~DL=5~~ | | | |
| Liquid | E,H,I,A | SOL | K, CLA | acetone | | | | | | | | | | | | |
| Liquid | A,H,I | SOL | SH | carbon disulfide | | | | | | | | | | | | |
| Liquid | A,D,G,I | SOL | HH | 1,1-dichloroethene | | | | | | | | | | | | |
| Liquid | A,D,H,G | SOL | HH | 1,1-dichloroethane | | | | | | | | | | | | |
| Liquid | A,D,G | SOL | HH | 1,2-dichloroethene (total) | | | | | | | | | | | | |
| Liquid | A,D | SOL | HH | chloroform | | | | | | | | | | | | |
| Liquid | A,D,G | SOL | HH | 1,2-dichloroethane | | | | | | | | | | | | |
| Liquid | A,E,G | SOL | K, CLA | 2-butanone (MEK) | | | | | | | | | | | | |
| Liquid | A,D | SOL | HH | 1,1,1-trichloroethane | | | | | | | | | | | | |
| Liquid | A,D | SOL | HH | carbon tetrachloride | | | | | | | | | | | | |
| Liquid | A,D,G | SOL | HYD | vinyl acetate | | | | | | | | | | | | |
| Liquid | A,D | OCC | HH | bromodichloroethane | | | | | | | | | | | | |
| Liquid | A,D,G | SOL | HH | 1,2-dichloropropane | | | | | | | | | | | | |
| Liquid | A,D,G | SOL | HH | cis-1,3-dichloropropene | | | | | | | | | | | | |
| Liquid | A,D,G,B | SOL | HH | trichloroethene | -- | -- | -- | -- | 8 | 1J | -- | | | | | |
| Liquid | A,D | OCC | HH | dibromochloroethane | | | | | | | | | | | | |
| Liquid | A,D | SOL | HH | 1,1,2-trichloroethane | | | | | | | | | | | | |
| Liquid | A,G | SOL | A | benzene | | | | | | | | | | | | |
| Liquid | A,D,G | SOL | HH | trans-1,3-dichloropropene | | | | | | | | | | | | |
| Liquid | A,D | SOL | HH, CLA | bromoform | | | | | | | | | | | | |
| Liquid | A,E,G | SOL | K, CLA | 4-methyl-2-pentanone | | | | | | | | | | | | |
| Liquid | A,E,G | SOL | K | 2-hexanone | | | | | | | | | | | | |
| Liquid | A,D | SOL | HH | tetrachloroethene | -- | -- | 9J | -- | 5J | 25J | 12J | | | | | |
| Liquid | A,G,E | SOL | A, CLA | toluene | -- | -- | -- | -- | -- | 3J | -- | | | | | |
| Liquid | A,D,E | SOL | HH | 1,1,2,2-tetrachloroethane | | | | | | | | | | | | |
| Liquid | A,D,G | SOL | HA | chlorobenzene | | | | | | | | | | | | |
| Liquid | A,G | SOL | A | ethylbenzene | | | | | | | | | | | | |
| Liquid | A,D,G | OCC | A | styrene | | | | | | | | | | | | |
| Liquid | A,G | SOL | A | xylenes (total) | | | | | | | | | | | | |

CLA ~~most likely~~

Table 4-1 (Cont.)

| Physical State* | Waste Characteristics** | Category*** | SI Memo | Sample Collection Information and Parameters | Sample Number S1 | S2 | S3 | S4 | S5 | S6 | S7 | 8 | 9 | 10 | 11 | 12 |
|---|---|---|---|---|---|---|---|---|---|---|---|---|---|---|---|---|
| | | | | Semivolatile Organics | | | | | | | | | | | | |
| S, thick L | A,B,E | OCC | P | phenol | | | | | | | | | | | | |
| Liquid | A,D,B | OCC | HH | bis(2-chloroethyl)ether | | | | | | | | | | | | |
| Liquid | A,D,B | OCC | P | 2-chlorophenol | | | | | | | | | | | | |
| Liquid | A,D,H | SOL | HA | 1,3-dichlorobenzene | | | | | | | | | | | | |
| Solid | A,D,H | OCC | HA | 1,4-dichlorobenzene | | | | | | | | | | | | |
| Liquid | A,D,H | SOL | A | benzyl alcohol | | | | | | | | | | | | |
| Liquid | A,D,H | OCC | HA | 1,2-dichlorobenzene | | | | | | | | | | | | |
| Liquid | A,B | OCC | P | 2-methylphenol | | | | | | | | | | | | |
| | A,D | OCC | HH | bis(2-chloroisopropyl)ether | | | | | | | | | | | | |
| Liquid | A,B | OCC | P | 4-methylphenol | | | | | | | | | | | | |
| | A | OCC | H-Amine | n-nitroso-di-n-dipropylamine | | | | | | | | | | | | |
| Solid | A,D | OCC | HH | hexachloroethane | | | | | | | | | | | | |
| Liquid | A,D | OCC | HA | nitrobenzene | | | | | | | | | | | | |
| Liquid | A,D | OCC | H | isophorone | | | | | | | | | | | | |
| Solid | A,D | OCC | P | 2-nitrophenol | | | | | | | | | | | | |
| Solid | A,B | OCC | P | 2,4-dimethylphenol | | | | | | | | | | | | |
| Solid | A | OCC | A | benzoic acid | | | | | | | | | | | | |
| | A,D | OCC | HH | bis(2-chloroethoxy)methane | | | | | | | | | | | | |
| Liquid | A,D | OCC | P | 2,4-dichlorophenol | | | | | | | | | | | | |
| Liquid | A,D | OCC | HA | 1,2,4-trichlorobenzene | | | | | | | | | | | | |
| Solid | A | OCC | PAH | naphthalene | | | | | | | | | | | | |
| Solid | A,D | OCC | HH | 4-chloroaniline | | | | | | | | | | | | |
| Liquid | A,D,B | OCC | HH | hexachlorobutadiene | | | | | | | | | | | | |
| Solid | A,D | OCC | P | 4-chloro-3-methylphenol | | | | | | | | | | | | |
| Liquid | A,D | OCC | PAH | 2-methylnaphthalene | | | | | | | | | | | | |
| Liquid | A,D,B | OCC | HH | hexachlorocyclopentadiene | | | | | | | | | | | | |
| Solid | A,D | OCC | P | 2,4,6-trichlorophenol | | | | | | | | | | | | |
| Solid | A,D | OCC | P | 2,4,5-trichlorophenol | | | | | | | | | | | | |
| Liquid | A,D | OCC | PAH | 2-chloronaphthalene | | | | | | | | | | | | |
| Solid | A,D | OCC | HH | 2-nitroaniline | | | | | | | | | | | | |
| Liquid | A,D | OCC | PH,CLA | dimethylphthalate | | | | | | | | | | | | |
| Solid | A,D | OCC | PAH | acenaphthylene | | | | | | | | | | | | |
| Solid | A,D | OCC | HA | 2,6-dinitrotoluene | | | | | | | | | | | | |
| Solid | A,D | OCC | HH | 3-nitroaniline | | | | | | | | | | | | |
| Solid | A,D | OCC | PAH | acenaphthene | | | | | | | | | | | | |
| Solid | A,D,G | OCC | P | 2,4-dinitrophenol | | | | | | | | | | | | |
| Solid | A,D | OCC | P | 4-nitrophenol | | | | | | | | | | | | |
| Solid | A,D | OCC | A | dibenzofuran | | | | | | | | | | | | |
| Solid | A,D | OCC | HA | 2,4-dinitrotoluene | | | | | | | | | | | | |
| Liquid | A,D | OCC | PH | diethylphthalate | | | | | | | | | | | | |
| | A,D | OCC | HH | 4-chlorophenyl-phenylether | | | | | | | | | | | | |
| Solid | A,D | OCC | PAH | fluorene | | | | | | | | | | | | |
| Solid | A,D,E | OCC | HH | 4-nitroaniline | | | | | | | | | | | | |
| Solid | A,D | OCC | P | 4,6-dinitro-2-methylphenol | | | | | | | | | | | | |
| Solid | A,D | OCC | HH | n-nitrosodiphenylamine | | | | | | | | | | | | |
| Liquid | A,D | OCC | HH | 4-bromophenyl-phenylether | | | | | | | | | | | | |
| Solid | A,D | OCC | HA | hexachlorobenzene | | | | | | | | | | | | |
| Solid | A,D | OCC | P | pentachlorophenol | | | | | | | | | | | | |
| Solid | A,D | OCC | PAH | phenanthrene | | | | | | | | | | | | |

Table 4-1 (Cont.)

| Physical State* | Waste Characteristics** | Category*** | SI Memo | Sample Collection Information and Parameters | Sample Number S1 | S2 | S3 | S4 | S5 | S6 | S7 | 8 | 9 | 10 | 11 | 12 |
|---|---|---|---|---|---|---|---|---|---|---|---|---|---|---|---|---|
| | | | | Semivolatile Organics, Cont. | | | | | | | | | | | | |
| Solid | A,D | OCC | PAH | anthracene | | | | | | | | | | | | |
| Liquid | A,D | OCC | PH,CLA | di-n-butylphthalate | | | | | | | | | | | | |
| Solid | A,D | OCC | PAH | fluoranthene | -- | -- | -- | -- | 190J | | -- | | | | | |
| Solid | A,D | OCC | PAH | pyrene | -- | -- | -- | -- | 130J | -- | -- | | | | | |
| Liquid | A,D | OCC | PH,CLA | butylbenzylphthalate | | | | | | | | | | | | |
| | A,D | OCC | HA | 3,3'-dichlorobenzidine | | | | | | | | | | | | |
| Solid | A,D | OCC | PAH | benzo[a]anthracene | | | | | | | | | | | | |
| Solid | A,D | OCC | PAH | chrysene | | | | | | | | | | | | |
| Liquid | A,D | OCC | PH,CLA | bis(2-ethylhexyl)phthalate | 2300 J | 650J | 870J | 3500 | 240J | -- | 300J | | | | | |
| Liquid | A,D | OCC | PH,CLA | di-n-octylphthalate | | | | | | | | | | | | |
| Solid | A,D | OCC | PAH | benzo(b)fluoranthene | | | | | | | | | | | | |
| Solid | A,D | OCC | PAH | benzo(k)fluoranthene | | | | | | | | | | | | |
| Solid | A,D,K,L | OCC | PAH | benzo(a)pyrene | | | | | | | | | | | | |
| Solid | A,D | OCC | PAH | indeno(1,2,3-cd)pyrene | | | | | | | | | | | | |
| Solid | A,D | OCC | PAH | dibenzo(a,h)anthracene | | | | | | | | | | | | |
| Solid | A,D | OCC | PAH | benzo(g,h,i)perylene | | | | | | | | | | | | |
| | | | | Pesticides/PCBs | | | | | | | | | | | | |
| Solid | A,D | PSD | PEST | alpha BHC | | | | | | | | | | | | |
| Solid | A,D | PSD | PEST | beta BHC | | | | | | | | | | | | |
| Solid | A,D | PSD | PEST | delta BHC | | | | | | | | | | | | |
| Solid | A,D | PSD | PEST | gamma BHC (Lindane) | | | | | | | | | | | | |
| Solid | A,D | PSD | PEST | Heptachlor | | | | | | | | | | | | |
| Solid | A,D | PSD | PEST | Aldrin | | | | | | | | | | | | |
| Solid | A,D | PSD | PEST | Heptachlor epoxide | | | | | | | | | | | | |
| Solid | A,D | PSD | PEST | Endosulfan I | | | | | | | | | | | | |
| Solid | A,D,E | PSD | PEST | Dieldrin | | | | | | | | | | | | |
| Solid | A,D | PSD | PEST | 4,4'-DDE | | | | | | | | | | | | |
| Solid | A,D | PSD | PEST | Endrin | -- | -- | -- | -- | 6.2J | -- | -- | | | | | |
| Solid | A,D | PSD | PEST | Endosulfan II | | | | | | | | | | | | |
| Solid | A,D | PSD | PEST | 4,4'-DDD DDD | -- | -- | -- | -- | 110 J | ~~[illegible]~~ | ~~[illegible]~~ | | | | | |
| Solid | A,D | PSD | PEST | Endosulfan sulfate | | | | | | | | | | | | |
| Solid | A,D | PSD | PEST | 4,4'-DDT | | | | | | | | | | | | |
| Solid | A,D | PSD | PEST | Methoxychlor (Marlate) | | | | | | | | | | | | |
| Solid | A,D | PSD | PEST | Endrin ketone | | | | | | | | | | | | |
| Solid | A,D | PSD | PEST | alpha Chlordane | | | | | | | | | | | | |
| Solid | A,D | PSD | PEST | gamma Chlordane | | | | | | | | | | | | |
| Solid | A,D | PSD | PEST | Toxaphene | | | | | | | | | | | | |
| Liquid | A,D | OCC | PCB | Aroclor 1016 | | | | | | | | | | | | |
| Liquid | A,D | OCC | PCB | Aroclor 1221 | | | | | | | | | | | | |
| Liquid | A,D | OCC | PCB | Aroclor 1232 | | | | | | | | | | | | |
| Liquid | A,D | OCC | PCB | Aroclor 1242 | | | | | | | | | | | | |
| Liquid | A,D | OCC | PCB | Aroclor 1248 | | | | | | | | | | | | |
| Liquid | A,D | OCC | PCB | Aroclor 1254 | -- | -- | 56J | -- | 770 | ~~[illegible]~~ | ~~[illegible]~~ | | | | | |
| Liquid | A,D | OCC | PCB | Aroclor 1260 | | | | | | | | | | | | |

Table 4-1 (Cont.)

CK 12/04/90

BKG.

| Physical State* | Waste Characteristics** | Category*** | SI Memo | Sample Collection Information and Parameters | S1 MEKS 56 | S2 MEKS 57 | S3 MEKS 58 | S4 MEKS 59 | S5 MEKS 60 | S6 MEKS 61 | S7 MEKS 62 | 8 | 9 | 10 | 11 | 12 |
|---|---|---|---|---|---|---|---|---|---|---|---|---|---|---|---|---|
| | | | | Analyte Detected (values in mg/kg or µg/L) | | | | | | | | | | | | |
| Solid | A,D | MES | CSC/CWC | aluminum | 11100 | 20600 | 27800 | 18200 | 13700 | 17400 | 15800 | | | | | |
| Solid | A,D | MES | HM | antimony | 253NJ | 80.4NJ | 116NJ | 385NJ | R | R | R | | | | | |
| Solid | A,D | MES | HM | arsenic | 21.9NJ | 25.7NJ | 12.9NJ | 23.1NJ | 3.9NJ | 5.8NJ | 10.4NJ | | | | | |
| Solid | A,D | MES | CSC/CWC | barium | 169 | 127 | 177 | 217 | 122 | 119 | 75.7 | | | | | |
| Solid | A,D | MES | M | beryllium | 1.2B | 1.3B | 1.3B | 0.98B | 1.2 | 1B | 0.75B | | | | | |
| Solid | A,D | MES | HM | cadmium | 10.6 | 7.7 | 8.3 | 20.9 | 4.8 | 3.8 | 3.6 | | | | | |
| Solid | D | MES | CSC/CWC | calcium | 55600 | 37500 | 74000 | 176000 | 40500 | 15500 | 12108 | | | | | |
| Solid | A,D | MES | HM | chromium | 22100 | 6120 | 10000 | 34500 | 671 | 51.8 | 21.8 | ~~S1-S4 → 291x~~ | | ~~1643x BKG~~ | ~~/ S5-32x BKG~~ | ~~DL=2 ppm~~ |
| Solid | A,D | MES | HM | cobalt | 36.5 | 25 | 14.8B | 26.3 | 8.2B | 9.4B | 8.9B | | | | | |
| Solid | A,D | MES | HM | copper | 4370 | 1820 | 2090 | 17800 | 216 | 31.5 | 9.5 | ~~S1-S4 → 220x~~ | | ~~1347x BKG~~ | ~~/ S5-23x BKG~~ | ~~DL=5~~ |
| Solid | A,D | MES | HM,CSC;CWC | iron | 23600 | 35300 | 28200 | 16810 | 29300 | 25200 | 26200 | | | | | |
| Solid | A,D | MES | HM | lead | 174*J | 21*J | 44.4*J | 117*J | 7.7*J | 15.2*J | 24.9*J | | | | | |
| Solid | A,D | MES | CSC/CWC | magnesium | 4860 | 9200 | 13300 | 3680 | 9180 | 5580 | 2530 | | | | | |
| Solid | A,D | MES | HM | manganese | 397N*J | 327N*J | 467N*J | 89.2N*J | 2810N*J | 705N*J | 320N*J | ~~121x~~ | ~~56x DL~~ | DL=.008 | | |
| Liquid | A,D | MES | HM | mercury | 0.41NJ | 0.1NJ | — | 0.45NJ | — | — | — | | | | | |
| Solid | A,D | MES | HM | nickel | 9580 | 2990 | 4590 | 4300 | 669 | 38.4 | 15.9 | ~~S1-S4 → 188x~~ | | ~~528x BKG~~ | ~~/ S5-42x BKG~~ | ~~DL=8 ppm~~ |
| Solid | D | MES | CSC,CWC | potassium | 1620B | 3540 | 3380 | 498B | 1650 | 1790 | 1570 | | | | | |
| Solid | A,D | MES | M | selenium | 1.3B | 0.85B | 1.6B | 3.2 | 0.33BWJ | 0.42B | 0.54B | | | | | |
| Solid | A,D | MES | HM | silver | R | R | R | 0.1NJ | R | R | R | ~~S4-35x DL~~ | ~~DL=2~~ | | | |
| Solid | D | MES | CSC,CWC | sodium | 57.6B | 41.6B | — | — | 114B | 35.3B | — | | | | | |
| Solid | A,D | MES | HM | thallium | — | — | — | — | — | — | — | | | | | |
| Solid | A,D | MES | HM | vanadium | — | 4.3BNJ | — | — | 38.8NJ | 38.2NJ | 34.5NJ | | | | | |
| Solid | A,D | MES | CWL,CSC,HM | zinc | 3360 | 1470 | 1930 | 3790 | 1010 | 115 | 81.9 | ~~S1-S5 → 12x~~ | | ~~46x BKG~~ | | ~~DL=4~~ |
| Solid | A | IOC | IOC | cyanide | 30.6NJ | 8.7NJ | — | 3.3NJ | — | — | — | | | | | |

~~215.3x DL~~ ~~24.35x DL~~ ~~71.5x DL~~ ~~DL=2~~

— Not detected.

Hits = Cr, Cu, Ni

Cannot use silver results since S1-S3 & S5-S7 are unusable.

Hits w/ qualifiers = Hg, CN-

Table 4-1 (Cont.)

| COMPOUND QUALIFIERS | DEFINITION | INTERPRETATION |
|---|---|---|
| U | Indicates compound was analyzed for but not detected. | Compound was not detected at or above the CRQL. |
| J | Indicates an estimated value. | Compound value may be semiquantitative. |
| UJ | Quantitation limit is estimated due to a quality control (QC) protocol. | Compound was not detected if value is at CRQL, e.g., 10U UJ. If a value is reported with a UJ above CRQL and it is <5x blank concentration (10x for common laboratory artifacts), the compound is detected but may be a laboratory artifact and not attributable to the sample. |
| C | This flag applies to pesticide results where the identification has been confirmed by GC/MS. Single component pesticides ≥10 ng/µL in the final extract shall be confirmed by GC/MS. | Compound was confirmed by GC/MS and is quantitative. Use pesticide/PCB listed value. |
| B | This flag is used when the compound is found in the associated blank as well as in the sample. It indicates possible/probable blank contamination and warns the data user to take appropriate action. | Compound value may be semiquantitative if it is <5x the blank concentration (<10x the blank concentrations for common laboratory artifacts: phthalates, methylene chloride, acetone, toluene, 2-butanone). |
| E | This flag identifies compounds whose concentrations exceed the calibration range of the GC/MS instrument for that specific analysis. This flag will not apply to pesticides/PCBs analyzed by GC/EC methods. | Compound value may be semiquantitative. There should be another analysis with a D qualifier, which is to be used. |
| D | This flag identifies all compounds identified in an analysis at a secondary dilution factor. | Alerts data user to a possible change in the CRQL. Data is quantitative. |
| A | This flag indicates that a TIC is a suspected aldol-condensation product. | Alerts data user of a laboratory artifact in the TICs only. |
| R | Results are unusable due to a major violation of QC protocol. | Compound value is not usable. |

| ANALYTE QUALIFIERS | DEFINITION | INTERPRETATION |
|---|---|---|
| E | Estimated or not reported due to interference. See laboratory narrative. | Analyte or element was not detected, or value may be semiquantitative. |
| S | Analysis by Method of Standard Additions. | Value is quantitative. |
| N | Spike recoveries outside QC protocols, which indicates a possible matrix problem. Data may be biased high or low. See spike results and laboratory narrative. | Value may be quantitative or semi-quantitative. |
| * | Duplicate value outside QC protocols which indicates a possible matrix problem. | Value may be quantitative or semiquantitative. |
| + | Correlation coefficient for standard additions is less than 0.995. See review and laboratory narrative. | Data value may be biased. |
| [ ] | Value is real, but is above instrument DL and below CRDL. | Value may be quantitative or semi-quantitative. |
| UJ | DL is estimated because of a QC protocol. DL is possibly above or below CRDL. | Compound or element was not detected. |
| J | Value is above CRDL and is an estimated value because of a QC protocol. | Value may be semiquantitative.. |
| " | Compound analyzed for but not detected. | Compound was not detected at or above the CRDL. |
| M | Duplicate injection precision not met. | Value may be semiquantitative. |
| W | Post-digestion spike for furnace AA analysis is out of control limits (35-115%), while sample absorbance is <50% of spike absorbance. | Value may be semiquantitative. |
| R | Results are unusable due to a major violation of QC protocols. | Analyte value is not usable. |

Source: Ecology and Environment, Inc. 1989.

11/13

UNITED STATES ENVIRONMENTAL PROTECTION AGENCY
REGION V

DATE: 11/29/90

SUBJECT: Review of Region V CLP Data
Received for Review on OCTOBER 24, 1990

FROM: Curtis Ross, Director (5SCRL)
Central Regional Laboratory
Patrick J. Chunilla for 12/04

TO: Data User: FIT

We have reviewed the data for the following case(s).

SITE NAME: GMC FISCHER BODY DIV (OH) SMO Case No. 149.06

EPA Data Set No. _____ No. of Samples: 7 D.U./Activity Numbers 1

CRL No. _____

SMO Traffic No. EKH56 - 62

CLP Laboratory: S-CUBED Hrs. Required for Review: 5 hours. x2 = 7 wks

Following are our findings.

This case consist of seven soil samples for organic analysis. (Samples EKH 56-62). Samples EKH56-59, 61-62 (VOA fraction) exceeded hold time by one day - Sample EKH58 (semi Volatile fraction) exceeded hold time by nine days - data from these samples are qualified as estimate, J.

Sample EKH60 was used for MS/MSD analysis in all fractions. Pesticide fraction MS/MSD analysis has 4 MS% RECs and 5 % RPDs outside the QC limits. %RSD for aldrin, Endrin & DDT (pest. fraction) greater than 10% and %D for Endo Sulfate (quant column) exceeds the 15% criteria.

Internal standard, Perylene-$d_{12}$, for semi Volatile samples EKH56 and 56RE is outside QC limit.

There were no duplicate, or field blanks designated in this case.

Sandra Foulke
Weston/ESAT
Nov. 28, 1990
312-353-2960

( ) Data are acceptable for use.
(X) Data are acceptable for use with qualifications noted above.
( ) Data are preliminary - pending verification by Contractor Laboratory.
( ) Data are unacceptable.

cc: Dr. Alfred Haeberer/Joan Fisk/Gary Ward, EPA Support Services
Ross K. Robeson, EMSL-Las Vegas
Don Trees, CLP/Sample Management Office

Region V

# ORGANIC REGIONAL DATA ASSESSMENT

CASE NO. 14906
LABORATORY S-Cubed
SDG # EKH56
SOW# 2/88
DPO: ACTION _____ FYI _____

SITE GMC Fisher Body Div (OH)
NO. OF SAMPLES/MATRIX 7 - Soil
REVIEWER (IF NOT ESD) WESTON-ESAT
REVIEWER'S NAME Sandra Faulko
COMPLETION DATE Nov. 28, 1990

## DATA ASSESSMENT SUMMARY

| | | VOA | BNA | PEST | OTHER |
|---|---|---|---|---|---|
| 1. | HOLDING TIMES | O | O/M | O | |
| 2. | GC/MS TUNE/INSTR. PERFORM. | O | O | O/M | |
| 3. | CALIBRATIONS | O | O | O | |
| 4. | BLANKS | O | O | O | |
| 5. | SURROGATES | O | O | O | |
| 6. | MATRIX SPIKE/DUP | O | O | X | |
| 7. | OTHER QC (FIELD BLKs & DUP) | O | O | O | |
| 8. | INTERNAL STANDARDS | O | O | O | |
| 9. | COMPOUND IDENTIFICATION | O | O | O | |
| 10. | SYSTEM PERFORMANCE | O | O | O | |
| 11. | OVERALL ASSESSMENT | O | O | O/X | |

O = Data had no problems/or qualified due to minor problems.
M = Data qualified due to major problems.
Z = Data unacceptable.
X = Problems, but do not affect data.

ACTION ITEMS: _____

AREAS OF CONCERN: Hold time for VOA samples (EKH56-59, 61-62) was exceeded by one day; SV sample EKH58 exceeded hold time by nine days - All data qualified as estimate, J. MS/MSD data for pesticide fraction has 4 MS % RECs

~~NOTABLE PERFORMANCE~~: and 5 % RPDs outside the QC limits. %D on quantitation column exceeds 15% criteria for Endo sulfate (in pesticide fraction) and % RSD greater than 10% for Aldrin, Endrin and DDT on DB-608 column. Semivolatile fraction - internal std Perylene-$d_{12}$ for samples EKH56 and 56RE outside the QC limits.

# NARRATIVE

**CONTRACTOR:** S-Cubed **CASE:** 14906

**HOLDING TIME**
Samples EKH56-59 and EKH61-62 submitted for volatile analysis exceeded their hold time by one (1) day. Sample EKH58 submitted for semivolatile analysis exceeded its hold time by nine days. Data for these samples are qualified as estimate, J, for positive results and "UJ", for negative results. All other samples submitted met hold time.

The criteria for VOA analysis is 7 days. SemiVolatile and Pesticide analysis extraction is 14 days and 40 days for analysis.

**GC/MS TUNING**
VOA: GC/MS tuning was performed as per specifications
SV: GC/MS tuning was performed as per specifications

**CALIBRATIONS**
Initial and Continuing
VOA & SV: Manual calculations for average RRF and % RSD agree with submitted laboratory data. The outliers that are outside the QC limits have been included on the Volatile and SemiVolatile Outlier form along with all samples associated with each calibration and the qualifier.

Pest/PCB: Linearity check meets QC criteria. Percent RSD (%RSD) for Aldrin, Endrin and DDT is greater than 10% on column DB-608. Percent Difference (%D), quantitation column, for Endo Sulfate exceeds the 15% criteria. All data for these components should be qualified estimate, J.

**METHOD BLANK**
VOA: Volatile Method Blank 01 (VBLK01) was found to contain Methylene chloride; no TICs were detected. Samples associated with this blank are EKH60, EKH60MS and 60MSD.

Volatile Method Blank 02 (VBLK02) was found to contain Methylene chloride; no TICs were detected. Samples associated with this blank are EKH56-59, and EKH61-62.

SV: SemiVolatile Blank 11 (SBLK11) was found to contain no target compounds; two TICs were detected. Samples associated with this blank are EKH56,56RE,57,59,60-62,60MS and 60MSD.

SemiVolatile Blank 13 (SBLK13) was found to contain no target compounds; two TICs were detected. Sample associated with this blank is EKH58.

The associated samples that contain the common contaminants at less than 10 times the amount in the related blank are qualified "U" undetected in those samples for these compounds.

PEST/PCB: Pesticide Blank 1 (PBLK1) was found to contain no target compounds. Samples associated with this blank are EKH56-62,60MS and 60MSD.

**SURROGATE RECOVERIES**

VOA: All reported data are within QC limits.
SV: All reported data are within QC limits.
PEST/PCB: Dibutylchorendate (DBC) for sample EKH60MS is outside the QC limits. Results for both positive, "J" and negative, "UJ" are estimated.

W J Wilson 11/27/90

**MATRIX SPIKE/MATRIX SPIKE DUPLICATE**

Sample EKH60 was used for MS/MSD analysis in all fractions.

VOA: All reported data are within QC limits.
SV: All reported data are within QC limits.
PEST: Four (4) MS %RECs were outside the QC limits (Lindane, Heptachlor, Dieldrin and Endrin). Five (5) %RPDs were outside the QC limits (Lindane, Heptachlor, Dieldrin, Endrin and DDT). All data for these components should be qualified as estimate, J.

All results for the unspiked samples are qualified as estimates, J, for positive results and "UJ for negative results.

**DUPLICATE SAMPLES AND FIELD BLANKS**

No samples were designated in this data set for duplicate samples, field blanks or trip blanks.

**INTERNAL STANDARDS**

VOA: All internal standard areas and retention times for are within QC limits.

SV: Internal standard Perylene-d12 for EKH56 and EKH56RE is outside the QC limit.

Refer to Table 4 for compounds affected by the internal standard mentioned above. All data associated with this internal standards are qualified as estimate, J, for positive results and "UJ" for negative results.

PEST/PCB: See "Calibration" section.

**COMPOUND IDENTIFICATION**

After reviewing the mass spectrums and chromatographs, it appears that all compounds were properly identified.

**COMPOUND QUANTITATION AND REPORTED DETECTION LIMITS**

Analytical results were quantified using a dilution factor of one (1). Detection limits were corrected for this dilution factor before data was quantified.

**SYSTEM PERFORMANCE**

Initial calibrations and continuing calibration checks for this case remained within the QC limits during analysis of all sample fractions. All instrument systems were performing satisfactorily.

**OTHER CASE SPECIFIC PROBLEMS**

No other problems were detected with this data case.

Reviewed By Sandra Foulks

Date November 26, 1990

Phone 312-353-2960

# CALIBRATION OUTLIERS
## VOLATILE HSL COMPOUNDS

CASE/SAS # 14906

CONTRACTOR S-Cubed

| Instrument # HP2 | Init. Cal. | | | Cont. Cal. | | | Cont. Cal. | | | Cont. Cal. | | | Cont. Cal. | | |
|---|---|---|---|---|---|---|---|---|---|---|---|---|---|---|---|
| DATE/TIME: | 9/24/90 1411 | | | 9/24/90 1829 | | | 9/26/90 0023 | | | | | | | | |
| | RF | %RSD | * | RF | %D | * | RF | %D | * | RF | %D | * | RF | %D | * |
| Chloromethane | | | | | | | | | | | | | | | |
| Bromomethane | | | | | | | | | | | | | | | |
| Vinyl Chloride | | | | | | | | | | | | | | | |
| Chloroethane | | | | | | | | | | | | | | | |
| Methylene Chloride | | | | | | | | | | | | | | | |
| Acetone | .101 | 19.8 | J | .131 | 30.0 | J | .062 | 38.0 | J | | | | | | |
| Carbon Disulfide | | | | | | | | | | | | | | | |
| 1,1-Dichloroethane | | | | | | | | | | | | | | | |
| 1,1-Dichloroethene | | | | | | | | | | | | | | | |
| Trans-1,2-Dichloroethene | | | | | | | | | | | | | | | |
| Chloroform | | | | | | | | | | | | | | | |
| 2-Butanone | .101 | 48.3 | J | .080 | 21.0 | J | .089 | 11.3 | J | | | | | | |
| 1,2-Dichloroethane | | | | | | | | | | | | | | | |
| 1,1,1-Trichloroethane | | | | | | | | | | | | | | | |
| Carbon Tetrachloride | | | | | | | | | | | | | | | |
| Vinyl Acetate | .321 | 6.8 | | .303 | 5.7 | | .291 | 9.4 | J | | | | | | |
| Bromodichloromethane | | | | | | | | | | | | | | | |
| 1,2-Dichloropropene | .197 | 3.4 | J | .191 | 4.1 | J | .198 | 0.5 | J | | | | | | |
| Trans-1,3-Dichloropropene | .224 | 7.4 | J | .214 | 4.5 | J | .222 | 0.7 | J | | | | | | |
| Trichloroethene | | | | | | | | | | | | | | | |
| Dibromochloromethane | | | | | | | | | | | | | | | |
| 1,1,2-Trichloroethane | .289 | 4.1 | J | .270 | 6.9 | J | .277 | 4.2 | J | | | | | | |
| Benzene | | | | | | | | | | | | | | | |
| cis-1,3-Dichloropropene | | | | | | | | | | | | | | | |
| 2-Chloroethylvinylether | | | | | | | | | | | | | | | |
| Bromoform | | | | | | | | | | | | | | | |
| 4-Methyl-2-Pentanone | .163 | 8.2 | J | .146 | 10.1 | J | .145 | 11.2 | J | | | | | | |
| 2-Hexanone | .104 | 9.5 | J | .086 | 17.6 | J | .074 | 25.2 | J | | | | | | |
| Tetrachloroethene | | | | | | | | | | | | | | | |
| 1,1,2,2-Tetrachloroethane | | | | | | | | | | | | | | | |
| Toluene | | | | | | | | | | | | | | | |
| Chlorobenzene | | | | | | | | | | | | | | | |
| Ethylbenzene | | | | | | | | | | | | | | | |
| Styrene | | | | | | | | | | | | | | | |
| m-Xylene | | | | | | | | | | | | | | | |
| o/p-Xylene | | | | | | | | | | | | | | | |

AFFECTED SAMPLES:

| | |
|---|---|
| VBLK01 | VBLK02 |
| EKH60 | EKH56-59 |
| EKH60MS | EKH61-62 |
| EKH60MSD | |

Reviewer's Initials/Date: SF 11/28/90

* These flags should be applied to the analytes on the sample data sheets.

# CALIBRATION OUTLIERS
## SEMIVOLATILE HSL COMPOUNDS
(Page 1)

CASE/SAS # 14906 CONTRACTOR S-Cubed

| Instrument # HP3 | Init. Cal. | | | Cont. Cal. | | | Cont. Cal. | | | Cont. Cal. | | | Cont. Cal. | | |
|---|---|---|---|---|---|---|---|---|---|---|---|---|---|---|---|
| DATE/TIME: | 10/11/90 1537 | | | 10/12/90 1145 | | | | | | | | | | | |
| | RF | %RSD | * | RF | %D | * | RF | %D | * | RF | %D | * | RF | %D | * |
| Phenol | | | | | | | | | | | | | | | |
| bis(-2-Chloroethyl)Ether | | - | | | | | | | | | | | | | |
| 2-Chlorophenol | | | | | | | | | | | | | | | |
| 1,3-Dichlorobenzene | | | | | | | | | | | | | | | |
| 1,4-Dichlorobenzene | | | | | | | | | | | | | | | |
| Benzyl Alcohol | | | | | | | | | | | | | | | |
| 1,2-Dichlorobenzene | | | | | | | | | | | | | | | |
| 2-Methylphenol | | | | | | | | | | | | | | | |
| bis(2-chloroisopropyl)Ether | | | | | | | | | | | | | | | |
| 4-Methylphenol | | | | | | | | | | | | | | | |
| N-Nitroso-Di-n-Propylamine | | | | | | | | | | | | | | | |
| Hexachloroethane | | | | | | | | | | | | | | | |
| Nitrobenzene | | | | | | | | | | | | | | | |
| Isophorone | | | | | | | | | | | | | | | |
| 2-Nitrophenol | | | | | | | | | | | | | | | |
| 2,4-Dimethylphenol | | | | | | | | | | | | | | | |
| Benzoic Acid | | | | | | | | | | | | | | | |
| bis(2-Chloroethoxy)Methane | | | | | | | | | | | | | | | |
| 2,4-Dichlorophenol | | | | | | | | | | | | | | | |
| 1,2,4-Trichlorobenzene | | | | | | | | | | | | | | | |
| Naphthalene | | | | | | | | | | | | | | | |
| 4-Chloroaniline | | | | | | | | | | | | | | | |
| Hexachlorobutadiene | | | | | | | | | | | | | | | |
| 4-Chloro-3-Methylphenol | | | | | | | | | | | | | | | |
| 2-Methylnaphthalene | | | | | | | | | | | | | | | |
| Hexachlorocyclopentadiene | | | | | | | | | | | | | | | |
| 2,4,6-Trichlorophenol | | | | | | | | | | | | | | | |
| 2,4,5-Trichlorophenol | | | | | | | | | | | | | | | |
| 2-Chloronaphthalene | | | | | | | | | | | | | | | |
| 2-Nitroaniline | | | | | | | | | | | | | | | |
| Dimethyl Phthalate | | | | | | | | | | | | | | | |
| Acenaphthylene | | | | | | | | | | | | | | | |
| 3-Nitroaniline | | | | | | | | | | | | | | | |
| Acenaphthene | | | | | | | | | | | | | | | |
| 2,4-Dinitrophenol | | | | | | | | | | | | | | | |
| 4-Nitrophenol | | | | | | | | | | | | | | | |
| Dibenzofuran | | | | | | | | | | | | | | | |

AFFECTED SAMPLES:

| | |
|---|---|
| EKH61 | EKH 56RE |
| | EKH 57 |
| | SBLK13 |
| | EKH 58 |

Reviewer Initials/Date: SF 11/28/90

* These flags should be applied to the analytes on the sample data sheets.

# CALIBRATION OUTLIERS
## SEMIVOLATILE HSL COMPOUNDS
Page 2

CASE/SAS # 14906 CONTRACTOR S-Cubed

| Instrument # HP3 | Init. Cal. | | | Cont. Cal. | | | Cont. Cal. | | | Cont. Cal. | | | Cont. Cal. | | |
|---|---|---|---|---|---|---|---|---|---|---|---|---|---|---|---|
| DATE/TIME: | 10/11/90 1537 | | | 10/12/90 1145 | | | | | | | | | | | |
| | RF | %RSD | * | RF | %D | * | RF | %D | * | RF | %D | * | RF | %D | * |
| 2,4-Dinitrotoluene | | - | | | | | | | | | | | | | |
| 2,6-Dinitrotoluene | | | | | | | | | | | | | | | |
| Diethylphthalate | | | | | | | | | | | | | | | |
| 4-Chlorophenyl-phenylether | | | | | | | | | | | | | | | |
| Fluorene | | | | | | | | | | | | | | | |
| 4-Nitroaniline | | | | | | | | | | | | | | | |
| 4,6-Dinitro-2-Methylphenol | | | | | | | | | | | | | | | |
| N-Nitrosodiphenylamine | | | | | | | | | | | | | | | |
| 4-Bromophenyl-phenylether | | | | | | | | | | | | | | | |
| Hexachlorobenzene | | | | | | | | | | | | | | | |
| Pentachlorophenol | | | | | | | | | | | | | | | |
| Phenanthrene | | | | | | | | | | | | | | | |
| Anthracene | | | | | | | | | | | | | | | |
| Di-n-Butylphthalate | | | | | | | | | | | | | | | |
| Fluoranthene | | | | | | | | | | | | | | | |
| Pyrene | | | | | | | | | | | | | | | |
| Butylbenzylphthalate | | | | | | | | | | | | | | | |
| Benzo(a)Anthracene | | | | | | | | | | | | | | | |
| bis(2-Ethylhexyl)Phthalate | | | | | | | | | | | | | | | |
| Chrysene | | | | | | | | | | | | | | | |
| Di-n-Octyl Phthalate | | | | | | | | | | | | | | | |
| Benzo(b)Fluoranthene | | | | | | | | | | | | | | | |
| Benzo(k)Fluoranthene | | | | | | | | | | | | | | | |
| Benzo(a)Pyrene | | | | | | | | | | | | | | | |
| Indeno(1,2,3-cd)Pyrene | .872 | 43.9 | J | 1.091 | 25.2 | J | | | | | | | | | |
| Dibenz(a,h)Anthracene | .801 | 38.1 | J | .988 | 23.3 | | | | | | | | | | |
| Benzo(g,h,i) Perylene | .578 | 60.4 | J | .746 | 29.2 | J | | | | | | | | | |

SEE PAGE 1 FOR AFFECTED SAMPLES.

* These flags should be applied to the analytes on the sample data sheets.

Reviewer's Initials/Date: SF 11/28/90

# CALIBRATION OUTLIERS
## SEMIVOLATILE HSL COMPOUNDS
(Page 1)

CASE/SAS # 14906 CONTRACTOR S-Cubed

| Instrument # HP3 | Init. Cal. | | | Cont. Cal. | | | Cont. Cal. | | | Cont. Cal. | | | Cont. Cal. | | |
|---|---|---|---|---|---|---|---|---|---|---|---|---|---|---|---|
| DATE/TIME: | 10/9/90 1048 | | | 10/10/90 0926 | | | 10/11/90 0040 | | | | | | | | |
| | RF | %RSD | * | RF | %D | * | RF | %D | * | RF | %D | * | RF | %D | * |
| Phenol | | | | | | | | | | | | | | | |
| bis(-2-Chloroethyl)Ether | | - | | | | | | | | | | | | | |
| 2-Chlorophenol | | | | | | | | | | | | | | | |
| 1,3-Dichlorobenzene | | | | | | | | | | | | | | | |
| 1,4-Dichlorobenzene | | | | | | | | | | | | | | | |
| Benzyl Alcohol | | | | | | | | | | | | | | | |
| 1,2-Dichlorobenzene | | | | | | | | | | | | | | | |
| 2-Methylphenol | | | | | | | | | | | | | | | |
| bis(2-chloroisopropyl)Ether | | | | | | | | | | | | | | | |
| 4-Methylphenol | | | | | | | | | | | | | | | |
| N-Nitroso-Di-n-Propylamine | | | | | | | | | | | | | | | |
| Hexachloroethane | | | | | | | | | | | | | | | |
| Nitrobenzene | | | | | | | | | | | | | | | |
| Isophorone | | | | | | | | | | | | | | | |
| 2-Nitrophenol | | | | | | | | | | | | | | | |
| 2,4-Dimethylphenol | | | | | | | | | | | | | | | |
| Benzoic Acid | | | | | | | | | | | | | | | |
| bis(2-Chloroethoxy)Methane | | | | | | | | | | | | | | | |
| 2,4-Dichlorophenol | | | | | | | | | | | | | | | |
| 1,2,4-Trichlorobenzene | | | | | | | | | | | | | | | |
| Naphthalene | | | | | | | | | | | | | | | |
| 4-Chloroaniline | | | | | | | | | | | | | | | |
| Hexachlorobutadiene | | | | | | | | | | | | | | | |
| 4-Chloro-3-Methylphenol | | | | | | | | | | | | | | | |
| 2-Methylnaphthalene | | | | | | | | | | | | | | | |
| Hexachlorocyclopentadiene | | | | | | | | | | | | | | | |
| 2,4,6-Trichlorophenol | | | | | | | | | | | | | | | |
| 2,4,5-Trichlorophenol | | | | | | | | | | | | | | | |
| 2-Chloronaphthalene | | | | | | | | | | | | | | | |
| 2-Nitroaniline | | | | | | | | | | | | | | | |
| Dimethyl Phthalate | | | | | | | | | | | | | | | |
| Acenaphthylene | | | | | | | | | | | | | | | |
| 3-Nitroaniline | | | | | | | | | | | | | | | |
| Acenaphthene | | | | | | | | | | | | | | | |
| 2,4-Dinitrophenol | .222 | 31.7 | J | .216 | 2.7 | | .198 | 11.0 | | | | | | | |
| 4-Nitrophenol | | | | | | | | | | | | | | | |
| Dibenzofuran | | | | | | | | | | | | | | | |

AFFECTED SAMPLES:

SBLK11
EKH 56
EKH 59
EKH 60
EKH 60 MS
EKH 60 MSD

EKH 62

Reviewer Initials/Date: SF 11/28/90

* These flags should be applied to the analytes on the sample data sheets.

# CALIBRATION OUTLIERS
## SEMIVOLATILE HSL COMPOUNDS
Page 2

CASE/SAS # 14906 CONTRACTOR S-Cubed

| Instrument # HP3 | Init. Cal. | | | Cont. Cal. | | | Cont. Cal. | | | Cont. Cal. | | | Cont. Cal. | | |
|---|---|---|---|---|---|---|---|---|---|---|---|---|---|---|---|
| DATE/TIME: | 10/7/90 0947 | | | 10/14/90 0926 | | | 10/11/90 0040 | | | | | | | | |
| | RF | %RSD | * | RF | %D | * | RF | %D | * | RF | %D | * | RF | %D | * |
| 2,4-Dinitrotoluene | | - | | | | | | | | | | | | | |
| 2,6-Dinitrotoluene | | | | | | | | | | | | | | | |
| Diethylphthalate | | | | | | | | | | | | | | | |
| 4-Chlorophenyl-phenylether | | | | | | | | | | | | | | | |
| Fluorene | | | | | | | | | | | | | | | |
| 4-Nitroaniline | | | | | | | | | | | | | | | |
| 4,6-Dinitro-2-Methylphenol | | | | | | | | | | | | | | | |
| N-Nitrosodiphenylamine | | | | | | | | | | | | | | | |
| 4-Bromophenyl-phenylether | | | | | | | | | | | | | | | |
| Hexachlorobenzene | | | | | | | | | | | | | | | |
| Pentachlorophenol | | | | | | | | | | | | | | | |
| Phenanthrene | | | | | | | | | | | | | | | |
| Anthracene | | | | | | | | | | | | | | | |
| Di-n-Butylphthalate | | | | | | | | | | | | | | | |
| Fluoranthene | | | | | | | | | | | | | | | |
| Pyrene | | | | | | | | | | | | | | | |
| Butylbenzylphthalate | | | | | | | | | | | | | | | |
| Benzo(a)Anthracene | | | | | | | | | | | | | | | |
| bis(2-Ethylhexyl)Phthalate | | | | | | | | | | | | | | | |
| Chrysene | | | | | | | | | | | | | | | |
| Di-n-Octyl Phthalate | | | | | | | | | | | | | | | |
| Benzo(b)Fluoranthene | | | | | | | | | | | | | | | |
| Benzo(k)Fluoranthene | | | | | | | | | | | | | | | |
| Benzo(a)Pyrene | | | | | | | | | | | | | | | |
| Indeno(1,2,3-cd)Pyrene | | | | | | | | | | | | | | | |
| Dibenz(a,h)Anthracene | | | | | | | | | | | | | | | |
| Benzo(g,h,i) Perylene | | | | | | | | | | | | | | | |

SEE PAGE 1 FOR AFFECTED SAMPLES.

* These flags should be applied to the analytes on the sample data sheets.

Reviewer's Initials/Date: SF 11/28/90

# DATA REPORTING QUALIFIERS

For reporting results to EPA, the following result qualifiers are used. Additional flags or footnotes explaining results are encouraged. However, the definition of each flag must be explicit.

VALUE - If the result is a value greater than or equal to the detection limit, report the value.

U - Indicates compound was analyzed but not detected. The sample quantitation limit must be corrected for dilution and for percent moisture. For example, 10 U for phenol in water if the sample final volume is the protocol-specified final volume. If a 1 to 10 dilution of extract is necessary, the reported limit is 100 U. For a soil sample, the value must also be adjusted for percent moisture. For example, if the sample had 24% moisture and a 1 to 10 dilution factor, the sample quantitation limit for phenol (330 U) would be corrected to:

$$\frac{(330\ U)}{D} \times df \qquad \text{where } D = \frac{100 - \%\ \text{moisture}}{100}$$

and df = dilution factor

$$\text{at 24\% moisture, } D = \frac{100-24}{100} = 0.76$$

$$\frac{(330\ U)}{.76} \times 10 = 4300\ U$$ rounded to the appropriate number of significant figures

For soil sample subjected to GPC clean-up procedures, the CRQL is also multiplied by 2, to account for the fact that only half of the extract is recovered.

J - Indicates an estimated value. This flag is used either when estimating a concentration for tentatively identified compounds where a 1:1 response is assumed, or when the mass spectral data indicate the presence of a compound that meets the identification criteria but the result is less than the sample quantitation limit but greater than zero. For example, if the sample quantitation limit is 10 ug/L, but a concentration is 3 ug/L is calculated, report it as 3J. The sample quantitation limit must be adjusted for both dilution and percent moisture as discussed for the U flag, so that if a sample with 24% moisture and a 1 to 10 dilution factor has a calculated concentration of 300 ug/L and a sample quantitation limit of 430 ug/kg, report the concentration as 300J on Form I.

C - This flag applies to pesticide results where the identification has been confirmed by GC/MS. Single component pesticides $\geq$10 ng/ul in the final extract shall be confirmed by GC/MS.

2



B - This flag is used when the analyte is found in the associated blank as well as in the sample. It indicates possible/probable blank contamination and warns the data user to take appropriate action. This flag must be used for a TIC as well as for a positively identified TCL compound.

E - This flag identifies compounds whose concentrations exceed the calibration range of the GC/MS instrument for that specific analysis. This flag will not apply to pesticides/PCBs analyzed by GC/EC methods. If one or more compounds have a response greater than full scale, the sample or extract must be diluted and re-analyzed according to the specifications. All such compounds with a response greater than full scale should have the concentration flagged with an "E" on the Form I for the original analysis. If the dilution of the extract causes any compounds identified in the first analysis to be below the calibration range in the second analysis, then the results of both analyses shall be reported on separate Forms I. The Form I for the diluted sample shall have the "DL" suffix appended to the sample number.

D - This flag identifies all compounds identified in an analysis at a secondary dilution factor. If a sample or extract is re-analyzed at a higher dilution factor, as in the "E" flag above, the "DL" suffix is appended to the sample number on the Form I for the diluted sample and all concentration values reported on that Form I are flagged with the "D" flag.

A - This flag indicates that TIC is a suspected aldol-condensation product.

X - Other specific flags and footnotes may be required to properly define the results. If used, they must be fully described and such description attached to the Sample Data Summary Package and the Case Narrative. If more than one is required, use "Y" and "Z", as needed. If more than five qualifiers are required for a sample result, use the "X" flag to combine several flags, as needed. For instance, the "X" flag might combine the "A", "B", and "D" flags for some sample.

## TABLE 4

### VOLATILE INTERNAL STANDARDS WITH CORRESPONING TCL ANALYTES ASSIGNED FOR QUANTITATION

| Bromochloromethane | 1,4-Difluorobenzene | Chlorobenzene-$d_5$ |
|---|---|---|
| Chloromethane | 2- Butanone | 2-Hexanone |
| Bromomethane | 1,1,1-Trichloroethane | 4-Methyl-2-Pentanone |
| *Vinyl Chloride | Carbon Tetrachloride | Tetrachloroethene |
| Chloroethane | Vinyl Acetate | 1,1,2,2-Tetrachloroethane |
| Methylene Chloride | Bromodichloromethane | *Toluene |
| Acetone | *1,2-Dichloropropane | Chlorobenzene |
| Carbon Disulfide | trans-1,3-Dichloropropane | *Ethylbenzene |
| *1,1-Dichloroethene | Trichloroethene | Styrene |
| 1,1-Dichloroethane | Dibromochloromethane | Xylene (total) |
| 1,2-Dichloroethene (total) | 1,1,2-Trichloroethane | Bromofluorobenzene (surr) |
| *Chloroform | Benzene | Toluene-$d_8$ (surr) |
| 1,2-Dichloroethane | cis-1,3-Dichloropropene | |
| 1,2-Dichloroethane-$d_4$ (surr) | Bromoform | |

(surr) = surrogate compound
*Calibration check compounds

### SEMIVOLATILE INTERNAL STANDARDS WITH CORRESPONDING TCL ANALYTES ASSIGNED FOR QUANTITATION

| 1,4-Dichlorobenzene-$d_4$ | Naphthalene-$d_8$ | Acenaphthene-$d_{10}$ | Phenanthrene-$d_{10}$ | Chrysene-$d_{12}$ | Perylene-$d_{12}$ |
|---|---|---|---|---|---|
| Phenol | Nitrobenzene | Hexachlorocyclopentadiene | 4,6-Dinitro-2-methylphenol | Pyrene | Di-n-octyl Phthalate |
| bis(2-Chloroethyl) ether | Isophorone | 2,4,6-Trichlorophenol | N-nitrosodiphenylamine | Butylbenzyl Phthalate | Benzo(b)fluoranthene |
| 2-Chlorophenol | 2-Nitrophenol | 2,4,5-Trichlorophenol | 1,2-Diphenylhydrazine | 3,3'-Dichlorobenzidine | Benzo(k)fluoranthene |
| 1,3-Dichlorobenzene | 2,4-Dimethylphenol | 2-Chloronaphthalene | 4-Bromophenyl Phenyl Ether | Benzo(a)anthracene | Benzo(a)pyrene |
| 1,4-Dichlorobenzene | Benzoic acid | 2-Nitroaniline | Hexachlorobenzene | bis(2-ethylhe Phthalate | Indeno(1,2,3-cd) pyrene |
| Benzyl Alcohol | bis(2-Chloroethoxy)methane | Dimethyl Phthalate | Pentachlorophenol | Chrysene | Dibenz(a,h) anthracene |
| 1,2-Dichlorobenzene | 2,4-Dichlorophenol | Acenaphthylene | Phenanthrene | Terphenyl-$d_{14}$ (surr) | Benzo(g,h,i) perylene |
| 2-Methylphenol | 1,2,4-Trichlorobenzene | 3-Nitroaniline | Anthracene | | |
| bis(2-Chloroisopropyl)ether | Naphthalene | Acenaphthene | Di-n-butyl Phthalate | | |
| 4-Methylphenol | 4-Chloroaniline | 2,4-Dinitrophenol | Fluoranthene | | |
| N-nitroso-Di-n-propylamine | Hexachlorobutadiene | 4-Nitrophenol | | | |
| Hexachloroethane | 4-Chloro-3-methylphenol | Dibenzofuran | | | |
| 2-Fluorophenol (surr) | 2-Methylnaphthalene | 2,4-Dinitrotoluene | | | |
| Phenol-$d_6$ (surr) | Nitrobenzene-$d_5$ (surr) | 2,6-Dinitrotoluene | | | |
| | | Diethyl Phthalate | | | |
| | | 4-Chlorophenyl-phenyl ether | | | |
| | | Fluorene | | | |
| | | 4-Nitroaniline | | | |
| | | 2-Fluorobiphenyl (surr) | | | |
| | | 2,4,6-Tribromo Phenol (surr) | | | |

Surr = surrogate compound

S-CUBED
A Division of Maxwell Laboratories, Inc.

US EPA CENTRAL REGIONAL LAB.
536 S. CLARK ST.
CHIC ILLINO
OCT 2 1 1990
RECEIVED

October 23,1990 Vol 1 of 3

**Narrative Case: 14906**
**S-CUBED Contract No. 68D90027**

---

This case consists of the following samples reported under SDG: EKH56

RECEIVED
OCT 2 1 1990
US EPA CENTRAL REGIONAL LAB.
536 S. CLARK ST.
CHICAGO, ILLINOIS 60605

| | | | |
|---|---|---|---|
| EKH56 | EKH58 | EKH60 | EKH62 |
| EKH57 | EKH59 | EKH61 | |

Matrix: EKH60

ABN Reanalyses: EKH56RE

Volatile analyses were staightforward. Low levels of chlorinated compounds were detected in several samples.

The above listed ABN reanalysis was carried out due to low recoveries of the last internal standard. Sample EKH58 was reextracted outside of holding times due to noncompliant surrogates in the original extract.

The analyses of pesticide samples EKH60, EKH60MS, and EKH60MSD were problematic due to sample matrix effects. The pesticide matrix spike recoveries were poor for EKH60MS and EKH60MSD and the recovery of DBC in sample EKH60MS was also noncompliant. Arochlor 1254 was detected in pesticide samples EKH60, EKH60MS, EKH60MSD and EKH58. The only noncompliant pesticide standard data was the 15.4% difference value in INDA C1 for endosulfansulfate which was analyzed on the DB-1701 column.

Please note that S-CUBED uses megabore capillary for pesticide analysis, thus the action limit for DBC percent difference is 1.5 % rather than 0.3 %. S-CUBED also experiences interferences with the benzoic acid quantitation mass of 122 from 2,4 dimethyl phenol. Although the top of the chromatographic peak of these compounds are separated by about a minute, benzoic acid exhibits a high level of "fronting" which causes coelution of these two compounds. Consequently it is considerably more accurate to use the base peak of 105 for the quantitation of benzoic acid. Also note that S-CUBED uses a "X" flag to indicate the matrix spiked compounds.

P.O. Box 1620, La Jolla, California 92038-1620 3398 Carmel Mountain Road, San Diego, California 92121-1095
Tel: (619) 453-0060 TWX: 910-337-1253 FAX: (619) 755-0474

This contract requires the instrument and column type be indicated on the chromatograms. This information is available from the data system file name initial letter. The following table summarizes the instrument configurations.

| GC# | TYPE | CHANNEL | COLUMN |
|---|---|---|---|
| I | 5890 | C | DB-608 |
| | | D | DB-1701 |
| II | 5890 | E | DB-608 |
| | | F | DB-1701 |
| III | 5890 | P | DB-608 |
| | | Q | DB-1701 |
| IV | 5880 | G | DB-608 |
| | | H | DB-1701 |

I certify that this data package is in compliance with the terms and conditions of the contract, both technically and for completeness, for other than the conditions detailed above. Release of the data contained in this hardcopy data package and in the computer readable data submitted on floppy diskette has been authorized by the Laboratory Manager or his designee, as verified by the following signature.

Mark O'Hatte (for J. Wilkinson)

Date: 10/23/90
JoAnn Wilkinson, Project Manager

2B
SOIL VOLATILE SURROGATE RECOVERY

Lab Name: S-CUBED Contract: 68-D9-0027

Lab Code: S3 Case No. 14906 SAS No.: SDG No.: EKH56

Level:(low/med) LOW

| | EPA SAMPLE NO. | S1 (TOL)# | S2 (BFB)# | S3 (DCE)# | OTHER | TOT OUT |
|---|---|---|---|---|---|---|
| 01 | EKH56 | 100 | 97 | 98 | | 0 |
| 02 | EKH57 | 101 | 101 | 102 | | 0 |
| 03 | EKH58 | 106 | 97 | 101 | | 0 |
| 04 | EKH59 | 106 | 94 | 102 | | 0 |
| 05 | EKH60 | 105 | 96 | 105 | | 0 |
| 06 | EKH60MS | 105 | 98 | 105 | | 0 |
| 07 | EKH60MSD | 105 | 94 | 103 | | 0 |
| 08 | EKH61 | 103 | 98 | 101 | | 0 |
| 09 | EKH62 | 102 | 98 | 104 | | 0 |
| 10 | VBLK01 | 100 | 100 | 101 | | 0 |
| 11 | VBLK02 | 98 | 100 | 94 | | 0 |
| 12 | | | | | | |
| 13 | | | | | | |
| 14 | | | | | | |
| 15 | | | | | | |
| 16 | | | | | | |
| 17 | | | | | | |
| 18 | | | | | | |
| 19 | | | | | | |
| 20 | | | | | | |
| 21 | | | | | | |
| 22 | | | | | | |
| 23 | | | | | | |
| 24 | | | | | | |
| 25 | | | | | | |
| 26 | | | | | | |
| 27 | | | | | | |
| 28 | | | | | | |
| 29 | | | | | | |
| 30 | | | | | | |

| | | QC LIMITS |
|---|---|---|
| S1 (TOL) | = Toluene-d8 | (81-117) |
| S2 (BFB) | = Bromofluorobenzene | (74-121) |
| S3 (DCE) | = 1,2-Dichloroethane-d4 | (70-121) |

# Column to be used to flag recovery values

* Values outside of contract required QC limits

D Surrogates diluted out

2D
SOIL SEMIVOLATILE SURROGATE RECOVERY

Lab Name: S-CUBED Contract: 68-D9-0027

Lab Code: S3 Case No. 14906 SAS No.: SDG No.: EKH56

Level:(low/med) LOW

| | EPA SAMPLE NO. | S1 (NBZ)# | S2 (FBP)# | S3 (TPH)# | S4 (PHL)# | S5 (FP2)# | S6 (TBP)# | OTHER | TOT OUT |
|---|---|---|---|---|---|---|---|---|---|
| 01 | EKH56 | 62 | 64 | 79 | 93 | 81 | 66 | | 0 |
| 02 | EKH56RE | 68 | 74 | 93 | 104 | 84 | 75 | | 0 |
| 03 | EKH57 | 54 | 59 | 63 | 94 | 76 | 61 | | 0 |
| 04 | EKH58 | 49 | 57 | 59 | 66 | 66 | 53 | | 0 |
| 05 | EKH59 | 50 | 57 | 68 | 77 | 64 | 56 | | 0 |
| 06 | EKH60 | 58 | 61 | 64 | 90 | 80 | 60 | | 0 |
| 07 | EKH60MS | 66 | 67 | 69 | 96 | 89 | 74 | | 0 |
| 08 | EKH60MSD | 66 | 66 | 69 | 96 | 87 | 72 | | 0 |
| 09 | EKH61 | 57 | 65 | 58 | 96 | 79 | 64 | | 0 |
| 10 | EKH62 | 42 | 47 | 50 | 72 | 58 | 49 | | 0 |
| 11 | SBLK11 | 66 | 68 | 71 | 106 | 90 | 74 | | 0 |
| 12 | SBLK13 | 59 | 63 | 61 | 66 | 65 | 60 | | 0 |
| 13 | | | | | | | | | |
| 14 | | | | | | | | | |
| 15 | | | | | | | | | |
| 16 | | | | | | | | | |
| 17 | | | | | | | | | |
| 18 | | | | | | | | | |
| 19 | | | | | | | | | |
| 20 | | | | | | | | | |
| 21 | | | | | | | | | |
| 22 | | | | | | | | | |
| 23 | | | | | | | | | |
| 24 | | | | | | | | | |
| 25 | | | | | | | | | |
| 26 | | | | | | | | | |
| 27 | | | | | | | | | |
| 28 | | | | | | | | | |
| 29 | | | | | | | | | |
| 30 | | | | | | | | | |

| | | QC LIMITS |
|---|---|---|
| S1 (S1) | = Nitrobenzene-d5 | (23-120) |
| S2 (S2) | = 2-Fluorobiphenyl | (30-115) |
| S3 (S3) | = Terphenyl-d14 | (18-137) |
| S4 (S4) | = Phenol-d5 | (24-113) |
| S5 (S5) | = 2-Fluorophenol | (25-121) |
| S6 (S6) | = 2,4,6-Tribromophenol | (19-122) |

# Column to be used to flag recovery values
* Values outside of contract required QC limits
D Surrogates diluted out



FORM II SV-2 1/87 Rev.

2F
SOIL PESTICIDE SURROGATE RECOVERY

Lab Name: S-CUBED Contract: 68-D9-0027

Lab Code: S3 Case No. 14906 SAS No.: SDG No.: EKH56

Level: (low/med) LOW

| | EPA SAMPLE NO. | S1 (DBC)# | OTHER |
|---|---|---|---|
| 01 | EKH56 | 76 | |
| 02 | EKH57 | 87 | |
| 03 | EKH58 | 34 | |
| 04 | EKH59 | 127 | |
| 05 | EKH60 | 56 | |
| 06 | EKH60MS | 3 * | |
| 07 | EKH60MSD | 75 | |
| 08 | EKH61 | 92 | |
| 09 | EKH62 | 83 | |
| 10 | PBLK1 | 88 | |
| 11 | | | |
| 12 | | | |
| 13 | | | |
| 14 | | | |
| 15 | | | |
| 16 | | | |
| 17 | | | |
| 18 | | | |
| 19 | | | |
| 20 | | | |
| 21 | | | |
| 22 | | | |
| 23 | | | |
| 24 | | | |
| 25 | | | |
| 26 | | | |
| 27 | | | |
| 28 | | | |
| 29 | | | |
| 30 | | | |

S1 (DBC) = Dibutylchlorendate ADVISORY QC LIMITS (20-150)

# Column to be used to flag recovery values

* Values outside of contract required QC limits
D Surrogates diluted out



FORM II PEST-2 1/87 Rev.

3B

# SOIL VOLATILE MATRIX SPIKE/MATRIX SPIKE DUPLICATE RECOVERY

Lab Name: S-CUBED Contract: 68-D9-0027

Lab Code: S3 Case No.: 14906 SAS No.: SDG No.: EKH56

Matrix Spike - EPA Sample No.: EKH60 Level:(low/med) LOW

| COMPOUND | SPIKE ADDED (ug/Kg) | SAMPLE CONCENTRATION (ug/Kg) | MS CONCENTRATION (ug/Kg) | MS % REC # | QC LIMITS REC. |
|---|---|---|---|---|---|
| 1,1-Dichloroethene | 59.200 | 0.000 | 45.714 | 77 | 59-172 |
| Trichloroethene | 59.200 | 8.170 | 54.902 | 79 | 62-137 |
| Benzene | 59.200 | 0.000 | 67.665 | 114 | 66-142 |
| Toluene | 59.200 | 0.000 | 72.531 | 123 | 59-139 |
| Chlorobenzene | 59.200 | 0.000 | 73.917 | 125 | 60-133 |

| COMPOUND | SPIKE ADDED (ug/Kg) | MSD CONCENTRATION (ug/Kg) | MSD % REC # | % RPD # | QC LIMITS RPD | QC LIMITS REC. |
|---|---|---|---|---|---|---|
| 1,1-Dichloroethene | 59.200 | 50.639 | 86 | 11 | 22 | 59-172 |
| Trichloroethene | 59.200 | 55.245 | 80 | 1 | 24 | 62-137 |
| Benzene | 59.200 | 68.494 | 116 | 2 | 21 | 66-142 |
| Toluene | 59.200 | 73.763 | 125 | 2 | 21 | 59-139 |
| Chlorobenzene | 59.200 | 73.798 | 125 | 0 | 21 | 60-133 |

# Column to be used to flag recovery and RPD values with an asterisk

* Values outside of QC limits

RPD: 0 out of 5 outside limits
Spike Recovery: 0 out of 10 outside limits

Comments: _____

3D
SOIL SEMIVOLATILE MATRIX SPIKE/MATRIX SPIKE DUPLICATE RECOVERY

Lab Name: S-CUBED Contract: 68-D9-0027

Lab Code: S3 Case No.: 14906 SAS No.: SDG No.: EKH56

Matrix Spike - EPA Sample No.: EKH60 Level:(low/med) LOW

| COMPOUND | SPIKE ADDED (ug/Kg) | SAMPLE CONCENTRATION (ug/Kg) | MS CONCENTRATION (ug/Kg) | MS % REC # | QC LIMITS REC. |
|---|---|---|---|---|---|
| Phenol | 15786.566 | 0.000 | 9407.214 | 60 | 26- 90 |
| 2-Chlorophenol | 15786.566 | 0.000 | 10091.562 | 64 | 25-102 |
| 1,4-Dichlorobenzene | 7893.283 | 0.000 | 5130.634 | 65 | 28-104 |
| N-Nitroso-di-n-prop.(1) | 7893.283 | 0.000 | 5608.967 | 71 | 41-126 |
| 1,2,4-Trichlorobenzene | 7893.283 | 0.000 | 5396.637 | 68 | 38-107 |
| 4-Chloro-3-methylphenol | 15786.566 | 0.000 | 9601.389 | 61 | 26-103 |
| Acenaphthene | 7893.283 | 0.000 | 4878.049 | 62 | 31-137 |
| 4-Nitrophenol | 15786.566 | 0.000 | 9889.494 | 63 | 11-114 |
| 2,4-Dinitrotoluene | 7893.283 | 0.000 | 5130.634 | 65 | 28- 89 |
| Pentachlorophenol | 15786.566 | 0.000 | 9879.233 | 63 | 17-109 |
| Pyrene | 7893.283 | 131.028 | 4788.065 | 59 | 35-142 |

| COMPOUND | SPIKE ADDED (ug/Kg) | MSD CONCENTRATION (ug/Kg) | MSD % REC # | % RPD # | QC LIMITS RPD | QC LIMITS REC. |
|---|---|---|---|---|---|---|
| Phenol | 15786.566 | 9205.936 | 58 | 3 | 35 | 26- 90 |
| 2-Chlorophenol | 15786.566 | 10084.458 | 64 | 0 | 50 | 25-102 |
| 1,4-Dichlorobenzene | 7893.283 | 5236.404 | 66 | 2 | 27 | 28-104 |
| N-Nitroso-di-n-prop.(1) | 7893.283 | 5491.357 | 70 | 1 | 38 | 41-126 |
| 1,2,4-Trichlorobenzene | 7893.283 | 5389.534 | 68 | 0 | 23 | 38-107 |
| 4-Chloro-3-methylphenol | 15786.566 | 9440.366 | 60 | 2 | 33 | 26-103 |
| Acenaphthene | 7893.283 | 4871.734 | 62 | 0 | 19 | 31-137 |
| 4-Nitrophenol | 15786.566 | 9887.126 | 63 | 0 | 50 | 11-114 |
| 2,4-Dinitrotoluene | 7893.283 | 5044.597 | 64 | 2 | 47 | 28- 89 |
| Pentachlorophenol | 15786.566 | 7444.944 | 47 | 29 | 47 | 17-109 |
| Pyrene | 7893.283 | 4959.350 | 61 | 3 | 36 | 35-142 |

(1) N-Nitroso-di-n-propylamine

# Column to be used to flag recovery and RPD values with an asterisk
* Values outside of QC limits

RPD: 0 out of 11 outside limits
Spike Recovery: 0 out of 22 outside limits

Comments:

3F

# SOIL PESTICIDE MATRIX SPIKE/MATRIX SPIKE DUPLICATE RECOVERY

Lab Name: S-CUBED Contract: 68-D9-0027

Lab Code: S3 Case No.: 14906 SAS No.: SDG No.: EKH56

Matrix Spike - EPA Sample No.: EKH60 Level:(low/med) LOW

| COMPOUND | SPIKE ADDED (ug/Kg) | SAMPLE CONCENTRATION (ug/Kg) | MS CONCENTRATION (ug/Kg) | MS % REC # | QC LIMITS REC. |
|---|---|---|---|---|---|
| gamma-BHC (Lindane) | 31.573 | 0.000 | 10.755 | 34 * | 46-127 |
| Heptachlor | 31.573 | 0.000 | 5.442 | 17 * | 35-130 |
| Aldrin | 31.573 | 0.000 | 19.958 | 63 | 34-132 |
| Dieldrin | 78.933 | 0.000 | 16.556 | 21 * | 31-134 |
| Endrin | 78.933 | 6.242 | 14.927 | 11 * | 42-139 |
| 4,4' DDT | 78.933 | 0.000 | 18.956 | 24 | 23-134 |

| COMPOUND | SPIKE ADDED (ug/Kg) | MSD CONCENTRATION (ug/Kg) | MSD % REC # | % RPD # | QC LIMITS RPD | QC LIMITS REC. |
|---|---|---|---|---|---|---|
| gamma-BHC (Lindane) | 31.573 | 18.249 | 58 | 52 * | 50 | 46-127 |
| Heptachlor | 31.573 | 17.859 | 57 | 108 * | 31 | 35-130 |
| Aldrin | 31.573 | 21.137 | 67 | 6 | 43 | 34-132 |
| Dieldrin | 78.933 | 40.384 | 51 | 83 * | 38 | 31-134 |
| Endrin | 78.933 | 50.899 | 57 | 135 * | 45 | 42-139 |
| 4,4' DDT | 78.933 | 43.123 | 55 | 78 * | 50 | 23-134 |

# Column to be used to flag recovery and RPD values with an asterisk

* Values outside of QC limits

RPD: 5 out of 6 outside limits
Spike Recovery: 4 out of 12 outside limits

Comments:

4A
VOLATILE METHOD BLANK SUMMARY

Lab Name: S-CUBED Contract: 68-D9-0027

Lab Code: S3 Case No.: 14906 SAS No.: SDG No.: EKH56

Lab File ID: LBS24 Lab Sample ID: LBS24

Date Analyzed: 09/24/90 Time Analyzed: 1934

Matrix: (soil/water) SOIL Level:(low/med) LOW

Instrument ID: HP2

THIS METHOD BLANK APPLIES TO THE FOLLOWING SAMPLES, MS AND MSD:

| | EPA SAMPLE NO. | LAB SAMPLE ID | LAB FILE ID | TIME ANALYZED |
|---|---|---|---|---|
| 01 | EKH60 | EKH60 | EKH60 | 0435 |
| 02 | EKH60MS | MSH60 | MSH60 | 0513 |
| 03 | EKH60MSD | MDH60 | MDH60 | 0551 |
| 04 | | | | |
| 05 | | | | |
| 06 | | | | |
| 07 | | | | |
| 08 | | | | |
| 09 | | | | |
| 10 | | | | |
| 11 | | | | |
| 12 | | | | |
| 13 | | | | |
| 14 | | | | |
| 15 | | | | |
| 16 | | | | |
| 17 | | | | |
| 18 | | | | |
| 19 | | | | |
| 20 | | | | |
| 21 | | | | |
| 22 | | | | |
| 23 | | | | |
| 24 | | | | |
| 25 | | | | |
| 26 | | | | |
| 27 | | | | |
| 28 | | | | |
| 29 | | | | |
| 30 | | | | |

COMMENTS:



FORM IV VOA 1/87 Rev.

4A
VOLATILE METHOD BLANK SUMMARY

Lab Name: S-CUBED Contract: 68-D9-0027

Lab Code: S3 Case No.: 14906 SAS No.: SDG No.: EKH56

Lab File ID: LBS25 Lab Sample ID: LBS25

Date Analyzed: 09/26/90 Time Analyzed: 0120

Matrix: (soil/water) SOIL Level:(low/med) LOW

Instrument ID: HP2

THIS METHOD BLANK APPLIES TO THE FOLLOWING SAMPLES, MS AND MSD:

| | EPA SAMPLE NO. | LAB SAMPLE ID | LAB FILE ID | TIME ANALYZED |
|---|---|---|---|---|
| 01 | EKH56 | EKH56 | EKH56 | 0209 |
| 02 | EKH57 | EKH57 | EKH57 | 0247 |
| 03 | EKH58 | EKH58 | EKH58 | 0325 |
| 04 | EKH59 | EKH59 | EKH59 | 0403 |
| 05 | EKH61 | EKH61 | EKH61 | 0441 |
| 06 | EKH62 | EKH62 | EKH62 | 0518 |
| 07 | | | | |
| 08 | | | | |
| 09 | | | | |
| 10 | | | | |
| 11 | | | | |
| 12 | | | | |
| 13 | | | | |
| 14 | | | | |
| 15 | | | | |
| 16 | | | | |
| 17 | | | | |
| 18 | | | | |
| 19 | | | | |
| 20 | | | | |
| 21 | | | | |
| 22 | | | | |
| 23 | | | | |
| 24 | | | | |
| 25 | | | | |
| 26 | | | | |
| 27 | | | | |
| 28 | | | | |
| 29 | | | | |
| 30 | | | | |

COMMENTS:



FORM IV VOA 1/87 Rev.

4B
SEMIVOLATILE METHOD BLANK SUMMARY

Lab Name: S-CUBED Contract: 68-D9-0027

Lab Code: S3 Case No.: 14906 SAS No.: SDG No.: EKH56

Lab File ID: BB925 Lab Sample ID: BB925

Date Extracted: 09/25/90 Extraction:(SepF/Cont/Sonc) SONC

Date Analyzed: 10/10/90 Time Analyzed: 1308

Matrix: (soil/water) SOIL Level:(low/med) LOW

Instrument ID: HP3

THIS METHOD BLANK APPLIES TO THE FOLLOWING SAMPLES, MS AND MSD:

| | EPA SAMPLE NO. | LAB SAMPLE ID | LAB FILE ID | DATE ANALYZED |
|---|---|---|---|---|
| 01 | EKH56 | EKH56 | EKH56 | 10/10/90 |
| 02 | EKH56RE | RRH56 | RRH56 | 10/12/90 |
| 03 | EKH57 | RRH57 | RRH57 | 10/12/90 |
| 04 | EKH59 | EKH59 | EKH59 | 10/10/90 |
| 05 | EKH60 | EKH60 | EKH60 | 10/10/90 |
| 06 | EKH61 | RRH61 | RRH61 | 10/12/90 |
| 07 | EKH62 | EKH62 | EKH62 | 10/11/90 |
| 08 | EKH60MS | MSK60 | MSK60 | 10/10/90 |
| 09 | EKH60MSD | MSDK6 | MSDK6 | 10/10/90 |
| 10 | | | | |
| 11 | | | | |
| 12 | | | | |
| 13 | | | | |
| 14 | | | | |
| 15 | | | | |
| 16 | | | | |
| 17 | | | | |
| 18 | | | | |
| 19 | | | | |
| 20 | | | | |
| 21 | | | | |
| 22 | | | | |
| 23 | | | | |
| 24 | | | | |
| 25 | | | | |
| 26 | | | | |
| 27 | | | | |
| 28 | | | | |
| 29 | | | | |
| 30 | | | | |

COMMENTS:



FORM IV SV 1/87 Rev.

4B
SEMIVOLATILE METHOD BLANK SUMMARY

Lab Name: S-CUBED Contract: 68-D9-0027

Lab Code: S3 Case No.: 14906 SAS No.: SDG No.: EKH56

Lab File ID: BLR11 Lab Sample ID: BLR11

Date Extracted: 10/11/90 Extraction:(SepF/Cont/Sonc) SONC

Date Analyzed: 10/12/90 Time Analyzed: 1726

Matrix: (soil/water) SOIL Level:(low/med) LOW

Instrument ID: HP3

THIS METHOD BLANK APPLIES TO THE FOLLOWING SAMPLES, MS AND MSD:

| | EPA SAMPLE NO. | LAB SAMPLE ID | LAB FILE ID | DATE ANALYZED |
|---|---|---|---|---|
| 01 | EKH58 | RXH58 | RXH58 | 10/12/90 |
| 02 | | | | |
| 03 | | | | |
| 04 | | | | |
| 05 | | | | |
| 06 | | | | |
| 07 | | | | |
| 08 | | | | |
| 09 | | | | |
| 10 | | | | |
| 11 | | | | |
| 12 | | | | |
| 13 | | | | |
| 14 | | | | |
| 15 | | | | |
| 16 | | | | |
| 17 | | | | |
| 18 | | | | |
| 19 | | | | |
| 20 | | | | |
| 21 | | | | |
| 22 | | | | |
| 23 | | | | |
| 24 | | | | |
| 25 | | | | |
| 26 | | | | |
| 27 | | | | |
| 28 | | | | |
| 29 | | | | |
| 30 | | | | |

COMMENTS:

4C
PESTICIDE METHOD BLANK SUMMARY

Lab Name: S-CUBED Contract: 68-D9-0027

Lab Code: S3 Case No.: 14906 SAS No.: SDG No.: EKH56

Lab Sample ID: PBLK1 Lab File ID: F1022015

Matrix:(soil/water) SOIL Level:(low/med) LOW

Date Extracted: 09/25/90 Extraction: (SepF/Cont/Sonc) SONC

Date Analyzed (1): 10/22/90 Date Analyzed (2): 10/22/90

Time Analyzed (1): 2251 Time Analyzed (2): 2211

Instrument ID (1): II Instrument ID (2): II

GC Column ID (1): DB-1701 GC Column ID (2): DB-608

THIS METHOD BLANK APPLIES TO THE FOLLOWING SAMPLES, MS AND MSD:

| | EPA SAMPLE NO. | LAB SAMPLE ID | DATE ANALYZED 1 | DATE ANALYZED 2 |
|---|---|---|---|---|
| 01 | EKH56 | EKH56 | 10/23/90 | 10/23/90 |
| 02 | EKH57 | EKH57 | 10/23/90 | 10/23/90 |
| 03 | EKH58 | EKH58 | 10/23/90 | 10/23/90 |
| 04 | EKH59 | EKH59 | 10/23/90 | 10/23/90 |
| 05 | EKH60 | EKH60 | 10/22/90 | 10/22/90 |
| 06 | EKH61 | EKH61 | 10/23/90 | 10/23/90 |
| 07 | EKH62 | EKH62 | 10/23/90 | 10/23/90 |
| 08 | EKH60MS | MSH60 | 10/23/90 | 10/22/90 |
| 09 | EKH60MSD | MSD60 | 10/23/90 | 10/23/90 |
| 10 | | | | |
| 11 | | | | |
| 12 | | | | |
| 13 | | | | |
| 14 | | | | |
| 15 | | | | |
| 16 | | | | |
| 17 | | | | |
| 18 | | | | |
| 19 | | | | |
| 20 | | | | |
| 21 | | | | |
| 22 | | | | |
| 23 | | | | |
| 24 | | | | |
| 25 | | | | |
| 26 | | | | |

COMMENTS:

1A
VOLATILE ORGANICS ANALYSIS DATA SHEET

EPA SAMPLE NO.

VBLK01

Lab Name: S-CUBED Contract: 68-D9-0027

Lab Code: S3 Case No.: 14906 SAS No.: SDG No.: EKH56

Matrix: (soil/water) SOIL Lab Sample ID: LBS24

Sample wt/vol: 5.000 (g/mL) G Lab File ID: LBS24

Level: (low/med) LOW Date Received: / /

% Moisture: not dec. 0 Date Analyzed: 09/24/90

Column: (pack/cap) PACK Dilution Factor: 1.000

| CAS NO. | COMPOUND | CONCENTRATION UNITS: (ug/L or ug/Kg) UG/KG | Q |
|---|---|---|---|
| 74-87-3 | Chloromethane | 10 | U |
| 74-83-9 | Bromomethane | 10 | U |
| 75-01-4 | Vinyl Chloride | 10 | U |
| 75-00-3 | Chloroethane | 10 | U |
| 75-09-2 | Methylene Chloride | 4 | J |
| 67-64-1 | Acetone | 10 | U |
| 75-15-0 | Carbon Disulfide | 5 | U |
| 75-35-4 | 1,1-Dichloroethene | 5 | U |
| 75-34-3 | 1,1-Dichloroethane | 5 | U |
| 540-59-0 | 1,2-Dichloroethene (Total) | 5 | U |
| 67-66-3 | Chloroform | 5 | U |
| 107-06-2 | 1,2-Dichloroethane | 5 | U |
| 78-93-3 | 2-Butanone | 10 | U |
| 71-55-6 | 1,1,1-Trichloroethane | 5 | U |
| 56-23-5 | Carbon Tetrachloride | 5 | U |
| 108-05-4 | Vinyl Acetate | 10 | U |
| 75-27-4 | Bromodichloromethane | 5 | U |
| 78-87-5 | 1,2-Dichloropropane | 5 | U |
| 10061-02-6 | trans-1,3-Dichloropropene | 5 | U |
| 79-01-6 | Trichloroethene | 5 | U |
| 124-48-1 | Dibromochloromethane | 5 | U |
| 79-00-5 | 1,1,2-Trichloroethane | 5 | U |
| 71-43-2 | Benzene | 5 | U |
| 10061-01-5 | cis-1,3-Dichloropropene | 5 | U |
| 75-25-2 | Bromoform | 5 | U |
| 591-78-6 | 2-Hexanone | 10 | U |
| 108-10-1 | 4-Methyl-2-Pentanone | 10 | U |
| 127-18-4 | Tetrachloroethene | 5 | U |
| 79-34-5 | 1,1,2,2-Tetrachloroethane | 5 | U |
| 108-88-3 | Toluene | 5 | U |
| 108-90-7 | Chlorobenzene | 5 | U |
| 100-41-4 | Ethylbenzene | 5 | U |
| 100-42-5 | Styrene | 5 | U |
| 1330-20-7 | Xylene (total) | 5 | U |

1E
VOLATILE ORGANICS ANALYSIS DATA SHEET
TENTATIVELY IDENTIFIED COMPOUNDS

EPA SAMPLE NO.

VBLK01

Lab Name: S-CUBED Contract: 68-D9-0027

Lab Code: S3 Case No.: 14906 SAS No.: SDG No.: EKH56

Matrix: (soil/water) SOIL Lab Sample ID: LBS24

Sample wt/vol: 5.000 (g/mL) G Lab File ID: LBS24

Level: (low/med) LOW Date Received: / /

% Moisture: not dec. 0 Date Analyzed: 09/24/90

Column: (pack/cap) PACK Dilution Factor: 1.000

Number TICs found: 0

CONCENTRATION UNITS:
(ug/L or ug/Kg) UG/KG

| CAS NUMBER | COMPOUND NAME | RT | EST. CONC. | Q |
|---|---|---|---|---|
| 1. | | | | |
| 2. | | | | |
| 3. | | | | |
| 4. | | | | |
| 5. | | | | |
| 6. | | | | |
| 7. | | | | |
| 8. | | | | |
| 9. | | | | |
| 10. | | | | |
| 11. | | | | |
| 12. | | | | |
| 13. | | | | |
| 14. | | | | |
| 15. | | | | |
| 16. | | | | |
| 17. | | | | |
| 18. | | | | |
| 19. | | | | |
| 20. | | | | |
| 21. | | | | |
| 22. | | | | |
| 23. | | | | |
| 24. | | | | |
| 25. | | | | |
| 26. | | | | |
| 27. | | | | |
| 28. | | | | |
| 29. | | | | |
| 30. | | | | |

1A
VOLATILE ORGANICS ANALYSIS DATA SHEET

EPA SAMPLE NO.

VBLK02

Lab Name: S-CUBED Contract: 68-D9-0027

Lab Code: S3 Case No.: 14906 SAS No.: SDG No.: EKH56

Matrix: (soil/water) SOIL Lab Sample ID: LBS25

Sample wt/vol: 5.000 (g/mL) G Lab File ID: LBS25

Level: (low/med) LOW Date Received: / /

% Moisture: not dec. 0 Date Analyzed: 09/26/90

Column: (pack/cap) PACK Dilution Factor: 1.000

| CAS NO. | COMPOUND | CONCENTRATION UNITS: (ug/L or ug/Kg) UG/KG | Q |
|---|---|---|---|
| 74-87-3 | Chloromethane | 10 | U |
| 74-83-9 | Bromomethane | 10 | U |
| 75-01-4 | Vinyl Chloride | 10 | U |
| 75-00-3 | Chloroethane | 10 | U |
| 75-09-2 | Methylene Chloride | 2 | J |
| 67-64-1 | Acetone | 10 | U |
| 75-15-0 | Carbon Disulfide | 5 | U |
| 75-35-4 | 1,1-Dichloroethene | 5 | U |
| 75-34-3 | 1,1-Dichloroethane | 5 | U |
| 540-59-0 | 1,2-Dichloroethene (Total) | 5 | U |
| 67-66-3 | Chloroform | 5 | U |
| 107-06-2 | 1,2-Dichloroethane | 5 | U |
| 78-93-3 | 2-Butanone | 10 | U |
| 71-55-6 | 1,1,1-Trichloroethane | 5 | U |
| 56-23-5 | Carbon Tetrachloride | 5 | U |
| 108-05-4 | Vinyl Acetate | 10 | U |
| 75-27-4 | Bromodichloromethane | 5 | U |
| 78-87-5 | 1,2-Dichloropropane | 5 | U |
| 10061-02-6 | trans-1,3-Dichloropropene | 5 | U |
| 79-01-6 | Trichloroethene | 5 | U |
| 124-48-1 | Dibromochloromethane | 5 | U |
| 79-00-5 | 1,1,2-Trichloroethane | 5 | U |
| 71-43-2 | Benzene | 5 | U |
| 10061-01-5 | cis-1,3-Dichloropropene | 5 | U |
| 75-25-2 | Bromoform | 5 | U |
| 591-78-6 | 2-Hexanone | 10 | U |
| 108-10-1 | 4-Methyl-2-Pentanone | 10 | U |
| 127-18-4 | Tetrachloroethene | 5 | U |
| 79-34-5 | 1,1,2,2-Tetrachloroethane | 5 | U |
| 108-88-3 | Toluene | 5 | U |
| 108-90-7 | Chlorobenzene | 5 | U |
| 100-41-4 | Ethylbenzene | 5 | U |
| 100-42-5 | Styrene | 5 | U |
| 1330-20-7 | Xylene (total) | 5 | U |

1E
VOLATILE ORGANICS ANALYSIS DATA SHEET
TENTATIVELY IDENTIFIED COMPOUNDS

EPA SAMPLE NO.

VBLK02

Lab Name: S-CUBED Contract: 68-D9-0027

Lab Code: S3 Case No.: 14906 SAS No.: SDG No.: EKH56

Matrix: (soil/water) SOIL Lab Sample ID: LBS25

Sample wt/vol: 5.000 (g/mL) G Lab File ID: LBS25

Level: (low/med) LOW Date Received: / /

% Moisture: not dec. 0 Date Analyzed: 09/26/90

Column: (pack/cap) PACK Dilution Factor: 1.000

Number TICs found: 0

CONCENTRATION UNITS:
(ug/L or ug/Kg) UG/KG

| CAS NUMBER | COMPOUND NAME | RT | EST. CONC. | Q |
|---|---|---|---|---|
| 1. | | | | |
| 2. | | | | |
| 3. | | | | |
| 4. | | | | |
| 5. | | | | |
| 6. | | | | |
| 7. | | | | |
| 8. | | | | |
| 9. | | | | |
| 10. | | | | |
| 11. | | | | |
| 12. | | | | |
| 13. | | | | |
| 14. | | | | |
| 15. | | | | |
| 16. | | | | |
| 17. | | | | |
| 18. | | | | |
| 19. | | | | |
| 20. | | | | |
| 21. | | | | |
| 22. | | | | |
| 23. | | | | |
| 24. | | | | |
| 25. | | | | |
| 26. | | | | |
| 27. | | | | |
| 28. | | | | |
| 29. | | | | |
| 30. | | | | |

FORM I VOA-TIC 1/87 Rev.

1B
SEMIVOLATILE ORGANICS ANALYSIS DATA SHEET

EPA SAMPLE NO.

SBLK11

Lab Name: S-CUBED Contract: 68-D9-0027

Lab Code: S3 Case No.: 14906 SAS No.: SDG No.: EKH56

Matrix: (soil/water) SOIL Lab Sample ID: BB925

Sample wt/vol: 30.0 (g/mL) G Lab File ID: BB925

Level: (low/med) LOW Date Received: / /

% Moisture: not dec. 0 dec._____ Date Extracted: 09/25/90

Extraction: (SepF/Cont/Sonc) SONC Date Analyzed: 10/10/90

GPC Cleanup: (Y/N) Y pH: 0.0 Dilution Factor: 1.000

| CAS NO. | COMPOUND | CONCENTRATION UNITS: (ug/L or ug/Kg) UG/KG | Q |
|---|---|---|---|
| 108-95-2 | Phenol | 660 | U |
| 111-44-4 | bis(2-Chloroethyl)ether | 660 | U |
| 95-57-8 | 2-Chlorophenol | 660 | U |
| 541-73-1 | 1,3-Dichlorobenzene | 660 | U |
| 106-46-7 | 1,4-Dichlorobenzene | 660 | U |
| 100-51-6 | Benzyl alcohol | 660 | U |
| 95-50-1 | 1,2-Dichlorobenzene | 660 | U |
| 95-48-7 | 2-Methylphenol | 660 | U |
| 108-60-1 | bis(2-Chloroisopropyl)ether | 660 | U |
| 106-44-5 | 4-Methylphenol | 660 | U |
| 621-64-7 | N-Nitroso-di-n-propylamine | 660 | U |
| 67-72-1 | Hexachloroethane | 660 | U |
| 98-95-3 | Nitrobenzene | 660 | U |
| 78-59-1 | Isophorone | 660 | U |
| 88-75-5 | 2-Nitrophenol | 660 | U |
| 105-67-9 | 2,4-Dimethylphenol | 660 | U |
| 65-85-0 | Benzoic acid | 3200 | U |
| 111-91-1 | bis(2-Chloroethoxy)methane | 660 | U |
| 120-83-2 | 2,4-Dichlorophenol | 660 | U |
| 120-82-1 | 1,2,4-Trichlorobenzene | 660 | U |
| 91-20-3 | Naphthalene | 660 | U |
| 106-47-8 | 4-Chloroaniline | 660 | U |
| 87-68-3 | Hexachlorobutadiene | 660 | U |
| 59-50-7 | 4-Chloro-3-methylphenol | 660 | U |
| 91-57-6 | 2-Methylnaphthalene | 660 | U |
| 77-47-4 | Hexachlorocyclopentadiene | 660 | U |
| 88-06-2 | 2,4,6-Trichlorophenol | 660 | U |
| 95-95-4 | 2,4,5-Trichlorophenol | 3200 | U |
| 91-58-7 | 2-Chloronaphthalene | 660 | U |
| 88-74-4 | 2-Nitroaniline | 3200 | U |
| 131-11-3 | Dimethylphthalate | 660 | U |
| 208-96-8 | Acenaphthylene | 660 | U |
| 606-20-2 | 2,6-Dinitrotoluene | 660 | U |

1C
SEMIVOLATILE ORGANICS ANALYSIS DATA SHEET

EPA SAMPLE NO.

SBLK11

Lab Name: S-CUBED Contract: 68-D9-0027

Lab Code: S3 Case No.: 14906 SAS No.: SDG No.: EKH56

Matrix: (soil/water) SOIL Lab Sample ID: BB925

Sample wt/vol: 30.0 (g/mL) G Lab File ID: BB925

Level: (low/med) LOW Date Received: / /

% Moisture: not dec. 0 dec._____ Date Extracted: 09/25/90

Extraction: (SepF/Cont/Sonc) SONC Date Analyzed: 10/10/90

GPC Cleanup: (Y/N) Y pH: 0.0 Dilution Factor: 1.000

| CAS NO. | COMPOUND | CONCENTRATION UNITS: (ug/L or ug/Kg) UG/KG | Q |
|---|---|---|---|
| 99-09-2 | 3-Nitroaniline | 3200 | U |
| 83-32-9 | Acenapthene | 660 | U |
| 51-28-5 | 2,4-Dinitrophenol | 3200 | U |
| 100-02-7 | 4-Nitrophenol | 3200 | U |
| 132-64-9 | Dibenzofuran | 660 | U |
| 121-14-2 | 2,4-Dinitrotoluene | 660 | U |
| 84-66-2 | Diethylphthalate | 660 | U |
| 7005-72-3 | 4-Chlorophenyl-phenylether | 660 | U |
| 86-73-7 | Fluorene | 660 | U |
| 100-01-6 | 4-Nitroaniline | 3200 | U |
| 534-52-1 | 4,6-Dinitro-2-methylphenol | 3200 | U |
| 86-30-6 | N-Nitrosodiphenylamine (1) | 660 | U |
| 101-55-3 | 4-Bromophenyl-phenylether | 660 | U |
| 118-74-1 | Hexachlorobenzene | 660 | U |
| 87-86-5 | Pentachlorophenol | 3200 | U |
| 85-01-8 | Phenanthrene | 660 | U |
| 120-12-7 | Anthracene | 660 | U |
| 84-74-2 | Di-n-butylphthalate | 660 | U |
| 206-44-0 | Fluoranthene | 660 | U |
| 129-00-0 | Pyrene | 660 | U |
| 85-68-7 | Butylbenzylphthalate | 660 | U |
| 91-94-1 | 3,3'-Dichlorobenzidine | 1300 | U |
| 56-55-3 | Benzo(a)anthracene | 660 | U |
| 218-01-9 | Chrysene | 660 | U |
| 117-81-7 | bis(2-Ethylhexyl)phthalate | 660 | U |
| 117-84-0 | Di-n-octylphthalate | 660 | U |
| 205-99-2 | Benzo(b)fluoranthene | 660 | U |
| 207-08-9 | Benzo(k)fluoranthene | 660 | U |
| 50-32-8 | Benzo(a)pyrene | 660 | U |
| 193-39-5 | Indeno(1,2,3-cd)pyrene | 660 | U |
| 53-70-3 | Dibenz(a,h)anthracene | 660 | U |
| 191-24-2 | Benzo(g,h,i)perylene | 660 | U |

(1) - Cannot be separated from Diphenylamine

1F

SEMIVOLATILE ORGANICS ANALYSIS DATA SHEET
TENTATIVELY IDENTIFIED COMPOUNDS

EPA SAMPLE NO.

SBLK11

Lab Name: S-CUBED Contract: 68-D9-0027

Lab Code: S3 Case No.: 14906 SAS No.: SDG No.: EKH56

Matrix: (soil/water) SOIL Lab Sample ID: BB925

Sample wt/vol: 30.0 (g/mL) G Lab File ID: BB925

Level: (low/med) LOW Date Received: / /

% Moisture: not dec. 0 dec._____ Date Extracted: 09/25/90

Extraction: (SepF/Cont/Sonc) SONC Date Analyzed: 10/10/90

GPC Cleanup : (Y/N) Y pH: 0.0 Dilution Factor: 1.000

Number TICs found: 2

CONCENTRATION UNITS:
(ug/L or ug/Kg) UG/KG

| CAS NUMBER | COMPOUND NAME | RT | EST. CONC. | Q |
|---|---|---|---|---|
| 1. | UNKNOWN | 7.57 | 2700 | J |
| 2. | UNKNOWN | 34.91 | 200 | J |
| 3. | | | | |
| 4. | | | | |
| 5. | | | | |
| 6. | | | | |
| 7. | | | | |
| 8. | | | | |
| 9. | | | | |
| 10. | | | | |
| 11. | | | | |
| 12. | | | | |
| 13. | | | | |
| 14. | | | | |
| 15. | | | | |
| 16. | | | | |
| 17. | | | | |
| 18. | | | | |
| 19. | | | | |
| 20. | | | | |
| 21. | | | | |
| 22. | | | | |
| 23. | | | | |
| 24. | | | | |
| 25. | | | | |
| 26. | | | | |
| 27. | | | | |
| 28. | | | | |
| 29. | | | | |
| 30. | | | | |

FORM I SV-TIC 1/87 Rev.

1B
SEMIVOLATILE ORGANICS ANALYSIS DATA SHEET

EPA SAMPLE NO.

SBLK13

Lab Name: S-CUBED Contract: 68-D9-0027

Lab Code: S3 Case No.: 14906 SAS No.: SDG No.: EKH56

Matrix: (soil/water) SOIL Lab Sample ID: BLR11

Sample wt/vol: 30.0 (g/mL) G Lab File ID: BLR11

Level: (low/med) LOW Date Received: / /

% Moisture: not dec. 0 dec._____ Date Extracted: 10/11/90

Extraction: (SepF/Cont/Sonc) SONC Date Analyzed: 10/12/90

GPC Cleanup: (Y/N) Y pH: 0.0 Dilution Factor: 1.000

| CAS NO. | COMPOUND | CONCENTRATION UNITS: (ug/L or ug/Kg) UG/KG | Q |
|---|---|---|---|
| 108-95-2 | Phenol | 660 | U |
| 111-44-4 | bis(2-Chloroethyl)ether | 660 | U |
| 95-57-8 | 2-Chlorophenol | 660 | U |
| 541-73-1 | 1,3-Dichlorobenzene | 660 | U |
| 106-46-7 | 1,4-Dichlorobenzene | 660 | U |
| 100-51-6 | Benzyl alcohol | 660 | U |
| 95-50-1 | 1,2-Dichlorobenzene | 660 | U |
| 95-48-7 | 2-Methylphenol | 660 | U |
| 108-60-1 | bis(2-Chloroisopropyl)ether | 660 | U |
| 106-44-5 | 4-Methylphenol | 660 | U |
| 621-64-7 | N-Nitroso-di-n-propylamine | 660 | U |
| 67-72-1 | Hexachloroethane | 660 | U |
| 98-95-3 | Nitrobenzene | 660 | U |
| 78-59-1 | Isophorone | 660 | U |
| 88-75-5 | 2-Nitrophenol | 660 | U |
| 105-67-9 | 2,4-Dimethylphenol | 660 | U |
| 65-85-0 | Benzoic acid | 3200 | U |
| 111-91-1 | bis(2-Chloroethoxy)methane | 660 | U |
| 120-83-2 | 2,4-Dichlorophenol | 660 | U |
| 120-82-1 | 1,2,4-Trichlorobenzene | 660 | U |
| 91-20-3 | Naphthalene | 660 | U |
| 106-47-8 | 4-Chloroaniline | 660 | U |
| 87-68-3 | Hexachlorobutadiene | 660 | U |
| 59-50-7 | 4-Chloro-3-methylphenol | 660 | U |
| 91-57-6 | 2-Methylnaphthalene | 660 | U |
| 77-47-4 | Hexachlorocyclopentadiene | 660 | U |
| 88-06-2 | 2,4,6-Trichlorophenol | 660 | U |
| 95-95-4 | 2,4,5-Trichlorophenol | 3200 | U |
| 91-58-7 | 2-Chloronaphthalene | 660 | U |
| 88-74-4 | 2-Nitroaniline | 3200 | U |
| 131-11-3 | Dimethylphthalate | 660 | U |
| 208-96-8 | Acenaphthylene | 660 | U |
| 606-20-2 | 2,6-Dinitrotoluene | 660 | U |

1C
SEMIVOLATILE ORGANICS ANALYSIS DATA SHEET

EPA SAMPLE NO.

SBLK13

Lab Name: S-CUBED Contract: 68-D9-0027

Lab Code: S3 Case No.: 14906 SAS No.: SDG No.: EKH56

Matrix: (soil/water) SOIL Lab Sample ID: BLR11

Sample wt/vol: 30.0 (g/mL) G Lab File ID: BLR11

Level: (low/med) LOW Date Received: / /

% Moisture: not dec. 0 dec._____ Date Extracted: 10/11/90

Extraction: (SepF/Cont/Sonc) SONC Date Analyzed: 10/12/90

GPC Cleanup: (Y/N) Y pH: 0.0 Dilution Factor: 1.000

| CAS NO. | COMPOUND | CONCENTRATION UNITS: (ug/L or ug/Kg) UG/KG | Q |
|---|---|---|---|
| 99-09-2 | 3-Nitroaniline | 3200 | U |
| 83-32-9 | Acenapthene | 660 | U |
| 51-28-5 | 2,4-Dinitrophenol | 3200 | U |
| 100-02-7 | 4-Nitrophenol | 3200 | U |
| 132-64-9 | Dibenzofuran | 660 | U |
| 121-14-2 | 2,4-Dinitrotoluene | 660 | U |
| 84-66-2 | Diethylphthalate | 660 | U |
| 7005-72-3 | 4-Chlorophenyl-phenylether | 660 | U |
| 86-73-7 | Fluorene | 660 | U |
| 100-01-6 | 4-Nitroaniline | 3200 | U |
| 534-52-1 | 4,6-Dinitro-2-methylphenol | 3200 | U |
| 86-30-6 | N-Nitrosodiphenylamine (1) | 660 | U |
| 101-55-3 | 4-Bromophenyl-phenylether | 660 | U |
| 118-74-1 | Hexachlorobenzene | 660 | U |
| 87-86-5 | Pentachlorophenol | 3200 | U |
| 85-01-8 | Phenanthrene | 660 | U |
| 120-12-7 | Anthracene | 660 | U |
| 84-74-2 | Di-n-butylphthalate | 660 | U |
| 206-44-0 | Fluoranthene | 660 | U |
| 129-00-0 | Pyrene | 660 | U |
| 85-68-7 | Butylbenzylphthalate | 660 | U |
| 91-94-1 | 3,3'-Dichlorobenzidine | 1300 | U |
| 56-55-3 | Benzo(a)anthracene | 660 | U |
| 218-01-9 | Chrysene | 660 | U |
| 117-81-7 | bis(2-Ethylhexyl)phthalate | 660 | U |
| 117-84-0 | Di-n-octylphthalate | 660 | U |
| 205-99-2 | Benzo(b)fluoranthene | 660 | U |
| 207-08-9 | Benzo(k)fluoranthene | 660 | U |
| 50-32-8 | Benzo(a)pyrene | 660 | U |
| 193-39-5 | Indeno(1,2,3-cd)pyrene | 660 | U |
| 53-70-3 | Dibenz(a,h)anthracene | 660 | U |
| 191-24-2 | Benzo(g,h,i)perylene | 660 | U |

(1) - Cannot be separated from Diphenylamine

1F

# SEMIVOLATILE ORGANICS ANALYSIS DATA SHEET
## TENTATIVELY IDENTIFIED COMPOUNDS

EPA SAMPLE NO.

SBLK13

Lab Name: S-CUBED Contract: 68-D9-0027

Lab Code: S3 Case No.: 14906 SAS No.: SDG No.: EKH56

Matrix: (soil/water) SOIL Lab Sample ID: BLR11

Sample wt/vol: 30.0 (g/mL) G Lab File ID: BLR11

Level: (low/med) LOW Date Received: / /

% Moisture: not dec. 0 dec._____ Date Extracted: 10/11/90

Extraction: (SepF/Cont/Sonc) SONC Date Analyzed: 10/12/90

GPC Cleanup : (Y/N) Y pH: 0.0 Dilution Factor: 1.000

Number TICs found: 2

CONCENTRATION UNITS:
(ug/L or ug/Kg) UG/KG

| CAS NUMBER | COMPOUND NAME | RT | EST. CONC. | Q |
|---|---|---|---|---|
| 1. | UNKNOWN | 7.53 | 6400 | J |
| 2. | UNKNOWN | 37.86 | 590 | J |
| 3. | | | | |
| 4. | | | | |
| 5. | | | | |
| 6. | | | | |
| 7. | | | | |
| 8. | | | | |
| 9. | | | | |
| 10. | | | | |
| 11. | | | | |
| 12. | | | | |
| 13. | | | | |
| 14. | | | | |
| 15. | | | | |
| 16. | | | | |
| 17. | | | | |
| 18. | | | | |
| 19. | | | | |
| 20. | | | | |
| 21. | | | | |
| 22. | | | | |
| 23. | | | | |
| 24. | | | | |
| 25. | | | | |
| 26. | | | | |
| 27. | | | | |
| 28. | | | | |
| 29. | | | | |
| 30. | | | | |

FORM I SV-TIC 1/87 Rev.

1D
PESTICIDE ORGANICS ANALYSIS DATA SHEET

EPA SAMPLE NO.

PBLK1

Lab Name: S-CUBED Contract: 68-D9-0027

Lab Code: S3 Case No.: 14906 SAS No.: SDG No.: EKH56

Matrix: (soil/water) SOIL Lab Sample ID: PBLK1

Sample wt/vol: 30.0 (g/mL) G Lab File ID: F1022015

Level: (low/med) LOW Date Received: / /

% Moisture: not dec. 0 dec.____ Date Extracted: 09/25/90

Extraction: (SepF/Cont/Sonc) SONC Date Analyzed: 10/22/90

GPC Cleanup: (Y/N) N pH: 0.0 Dilution Factor: 1.000

| CAS NO. | COMPOUND | CONCENTRATION UNITS: (ug/L or ug/Kg) UG/KG | Q |
|---|---|---|---|
| 319-84-6 | alpha-BHC | 8.00 | U |
| 319-85-7 | beta-BHC | 8.00 | U |
| 319-86-8 | delta-BHC | 8.00 | U |
| 58-89-9 | gamma-BHC (Lindane) | 8.00 | U |
| 76-44-8 | Heptachlor | 8.00 | U |
| 309-00-2 | Aldrin | 8.00 | U |
| 1024-57-3 | Heptachlor epoxide | 8.00 | U |
| 959-98-8 | Endosulfan I | 8.00 | U |
| 60-57-1 | Dieldrin | 16.00 | U |
| 72-55-9 | 4,4'-DDE | 16.00 | U |
| 72-20-8 | Endrin | 16.00 | U |
| 33213-65-9 | Endosulfan II | 16.00 | U |
| 72-54-8 | 4,4'-DDD | 16.00 | U |
| 1031-07-8 | Endosulfan sulfate | 16.00 | U |
| 50-29-3 | 4,4'-DDT | 16.00 | U |
| 72-43-5 | Methoxychlor | 80.00 | U |
| 53494-70-5 | Endrin ketone | 16.00 | U |
| 5103-71-9 | alpha-Chlordane | 80.00 | U |
| 5103-74-2 | gamma-Chlordane | 80.00 | U |
| 8001-35-2 | Toxaphene | 160.00 | U |
| 12674-11-2 | Aroclor-1016 | 80.00 | U |
| 11104-28-2 | Aroclor-1221 | 80.00 | U |
| 11141-16-5 | Aroclor-1232 | 80.00 | U |
| 53469-21-9 | Aroclor-1242 | 80.00 | U |
| 12672-29-6 | Aroclor-1248 | 80.00 | U |
| 11097-69-1 | Aroclor-1254 | 160.00 | U |
| 11096-82-5 | Aroclor-1260 | 160.00 | U |

1A
VOLATILE ORGANICS ANALYSIS DATA SHEET

EPA SAMPLE NO.

EKH56

Lab Name: S-CUBED Contract: 68-D9-0027

Lab Code: S3 Case No.: 14906 SAS No.: SDG No.: EKH56

Matrix: (soil/water) SOIL Lab Sample ID: EKH56

Sample wt/vol: 5.000 (g/mL) G Lab File ID: EKH56

Level: (low/med) LOW Date Received: 09/19/90

% Moisture: not dec. 32 Date Analyzed: 09/26/90

Column: (pack/cap) PACK Dilution Factor: 1.000

| CAS NO. | COMPOUND | CONCENTRATION UNITS: (ug/L or ug/Kg) UG/KG | Q |
|---|---|---|---|
| 74-87-3 | Chloromethane | 15 | U |
| 74-83-9 | Bromomethane | 15 | U |
| 75-01-4 | Vinyl Chloride | 15 | U |
| 75-00-3 | Chloroethane | 15 | U |
| 75-09-2 | Methylene Chloride | 11 | ~~B~~U 11/24/90 |
| 67-64-1 | Acetone | 15 | U |
| 75-15-0 | Carbon Disulfide | 7 | U |
| 75-35-4 | 1,1-Dichloroethene | 7 | U |
| 75-34-3 | 1,1-Dichloroethane | 7 | U |
| 540-59-0 | 1,2-Dichloroethene (Total) | 7 | U |
| 67-66-3 | Chloroform | 7 | U |
| 107-06-2 | 1,2-Dichloroethane | 7 | U |
| 78-93-3 | 2-Butanone | 15 | U |
| 71-55-6 | 1,1,1-Trichloroethane | 7 | U |
| 56-23-5 | Carbon Tetrachloride | 7 | U |
| 108-05-4 | Vinyl Acetate | 15 | U |
| 75-27-4 | Bromodichloromethane | 7 | U |
| 78-87-5 | 1,2-Dichloropropane | 7 | U |
| 10061-02-6 | trans-1,3-Dichloropropene | 7 | U |
| 79-01-6 | Trichloroethene | 7 | U |
| 124-48-1 | Dibromochloromethane | 7 | U |
| 79-00-5 | 1,1,2-Trichloroethane | 7 | U |
| 71-43-2 | Benzene | 7 | U |
| 10061-01-5 | cis-1,3-Dichloropropene | 7 | U |
| 75-25-2 | Bromoform | 7 | U |
| 591-78-6 | 2-Hexanone | 15 | U |
| 108-10-1 | 4-Methyl-2-Pentanone | 15 | U |
| 127-18-4 | Tetrachloroethene | 7 | U |
| 79-34-5 | 1,1,2,2-Tetrachloroethane | 7 | U |
| 108-88-3 | Toluene | 7 | U |
| 108-90-7 | Chlorobenzene | 7 | U |
| 100-41-4 | Ethylbenzene | 7 | U |
| 100-42-5 | Styrene | 7 | U |
| 1330-20-7 | Xylene (total) | 7 | U |

1E
VOLATILE ORGANICS ANALYSIS DATA SHEET
TENTATIVELY IDENTIFIED COMPOUNDS

EPA SAMPLE NO.

EKH56

Lab Name: S-CUBED Contract: 68-D9-0027

Lab Code: S3 Case No.: 14906 SAS No.: SDG No.: EKH56

Matrix: (soil/water) SOIL Lab Sample ID: EKH56

Sample wt/vol: 5.000 (g/mL) G Lab File ID: EKH56

Level: (low/med) LOW Date Received: 09/19/90

% Moisture: not dec. 32 Date Analyzed: 09/26/90

Column: (pack/cap) PACK Dilution Factor: 1.000

Number TICs found: 0

CONCENTRATION UNITS:
(ug/L or ug/Kg) UG/KG

| CAS NUMBER | COMPOUND NAME | RT | EST. CONC. | Q |
|---|---|---|---|---|
| 1. | | | | |
| 2. | | | | |
| 3. | | | | |
| 4. | | | | |
| 5. | | | | |
| 6. | | | | |
| 7. | | | | |
| 8. | | | | |
| 9. | | | | |
| 10. | | | | |
| 11. | | | | |
| 12. | | | | |
| 13. | | | | |
| 14. | | | | |
| 15. | | | | |
| 16. | | | | |
| 17. | | | | |
| 18. | | | | |
| 19. | | | | |
| 20. | | | | |
| 21. | | | | |
| 22. | | | | |
| 23. | | | | |
| 24. | | | | |
| 25. | | | | |
| 26. | | | | |
| 27. | | | | |
| 28. | | | | |
| 29. | | | | |
| 30. | | | | |

FORM I VOA-TIC 1/87 Rev.

1A
VOLATILE ORGANICS ANALYSIS DATA SHEET

EPA SAMPLE NO.

EKH57

Lab Name: S-CUBED Contract: 68-D9-0027

Lab Code: S3 Case No.: 14906 SAS No.: SDG No.: EKH56

Matrix: (soil/water) SOIL Lab Sample ID: EKH57

Sample wt/vol: 5.000 (g/mL) G Lab File ID: EKH57

Level: (low/med) LOW Date Received: 09/19/90

% Moisture: not dec. 35 Date Analyzed: 09/26/90

Column: (pack/cap) PACK Dilution Factor: 1.000

| CAS NO. | COMPOUND | CONCENTRATION UNITS: (ug/L or ug/Kg) UG/KG | Q |
|---|---|---|---|
| 74-87-3 | Chloromethane | 15 | U |
| 74-83-9 | Bromomethane | 15 | U |
| 75-01-4 | Vinyl Chloride | 15 | U |
| 75-00-3 | Chloroethane | 15 | U |
| 75-09-2 | Methylene Chloride | 10 | ~~B~~ U 11/28/90 |
| 67-64-1 | Acetone | 15 | U |
| 75-15-0 | Carbon Disulfide | 8 | U |
| 75-35-4 | 1,1-Dichloroethene | 8 | U |
| 75-34-3 | 1,1-Dichloroethane | 8 | U |
| 540-59-0 | 1,2-Dichloroethene (Total) | 8 | U |
| 67-66-3 | Chloroform | 8 | U |
| 107-06-2 | 1,2-Dichloroethane | 8 | U |
| 78-93-3 | 2-Butanone | 15 | U |
| 71-55-6 | 1,1,1-Trichloroethane | 8 | U |
| 56-23-5 | Carbon Tetrachloride | 8 | U |
| 108-05-4 | Vinyl Acetate | 15 | U |
| 75-27-4 | Bromodichloromethane | 8 | U |
| 78-87-5 | 1,2-Dichloropropane | 8 | U |
| 10061-02-6 | trans-1,3-Dichloropropene | 8 | U |
| 79-01-6 | Trichloroethene | 8 | U |
| 124-48-1 | Dibromochloromethane | 8 | U |
| 79-00-5 | 1,1,2-Trichloroethane | 8 | U |
| 71-43-2 | Benzene | 8 | U |
| 10061-01-5 | cis-1,3-Dichloropropene | 8 | U |
| 75-25-2 | Bromoform | 8 | U |
| 591-78-6 | 2-Hexanone | 15 | U |
| 108-10-1 | 4-Methyl-2-Pentanone | 15 | U |
| 127-18-4 | Tetrachloroethene | 3 | J |
| 79-34-5 | 1,1,2,2-Tetrachloroethane | 8 | U |
| 108-88-3 | Toluene | 8 | U |
| 108-90-7 | Chlorobenzene | 8 | U |
| 100-41-4 | Ethylbenzene | 8 | U |
| 100-42-5 | Styrene | 8 | U |
| 1330-20-7 | Xylene (total) | 8 | U |

1E

# VOLATILE ORGANICS ANALYSIS DATA SHEET
## TENTATIVELY IDENTIFIED COMPOUNDS

EPA SAMPLE NO.

EKH57

Lab Name: S-CUBED Contract: 68-D9-0027

Lab Code: S3 Case No.: 14906 SAS No.: SDG No.: EKH56

Matrix: (soil/water) SOIL Lab Sample ID: EKH57

Sample wt/vol: 5.000 (g/mL) G Lab File ID: EKH57

Level: (low/med) LOW Date Received: 09/19/90

% Moisture: not dec. 35 Date Analyzed: 09/26/90

Column: (pack/cap) PACK Dilution Factor: 1.000

Number TICs found: 0

CONCENTRATION UNITS:
(ug/L or ug/Kg) UG/KG

| CAS NUMBER | COMPOUND NAME | RT | EST. CONC. | Q |
|---|---|---|---|---|
| 1. | | | | |
| 2. | | | | |
| 3. | | | | |
| 4. | | | | |
| 5. | | | | |
| 6. | | | | |
| 7. | | | | |
| 8. | | | | |
| 9. | | | | |
| 10. | | | | |
| 11. | | | | |
| 12. | | | | |
| 13. | | | | |
| 14. | | | | |
| 15. | | | | |
| 16. | | | | |
| 17. | | | | |
| 18. | | | | |
| 19. | | | | |
| 20. | | | | |
| 21. | | | | |
| 22. | | | | |
| 23. | | | | |
| 24. | | | | |
| 25. | | | | |
| 26. | | | | |
| 27. | | | | |
| 28. | | | | |
| 29. | | | | |
| 30. | | | | |

1A
VOLATILE ORGANICS ANALYSIS DATA SHEET

EPA SAMPLE NO.

EKH58

Lab Name: S-CUBED Contract: 68-D9-0027

Lab Code: S3 Case No.: 14906 SAS No.: SDG No.: EKH56

Matrix: (soil/water) SOIL Lab Sample ID: EKH58

Sample wt/vol: 5.000 (g/mL) G Lab File ID: EKH58

Level: (low/med) LOW Date Received: 09/19/90

% Moisture: not dec. 33 Date Analyzed: 09/26/90

Column: (pack/cap) PACK Dilution Factor: 1.000

| CAS NO. | COMPOUND | CONCENTRATION UNITS: (ug/L or ug/Kg) UG/KG | Q |
|---|---|---|---|
| 74-87-3 | Chloromethane | 15 | U |
| 74-83-9 | Bromomethane | 15 | U |
| 75-01-4 | Vinyl Chloride | 15 | U |
| 75-00-3 | Chloroethane | 15 | U |
| 75-09-2 | Methylene Chloride | 13 | ~~B~~ U 11/28/90 |
| 67-64-1 | Acetone | 15 | U |
| 75-15-0 | Carbon Disulfide | 7 | U |
| 75-35-4 | 1,1-Dichloroethene | 7 | U |
| 75-34-3 | 1,1-Dichloroethane | 7 | U |
| 540-59-0 | 1,2-Dichloroethene (Total) | 7 | U |
| 67-66-3 | Chloroform | 7 | U |
| 107-06-2 | 1,2-Dichloroethane | 7 | U |
| 78-93-3 | 2-Butanone | 15 | U |
| 71-55-6 | 1,1,1-Trichloroethane | 7 | U |
| 56-23-5 | Carbon Tetrachloride | 7 | U |
| 108-05-4 | Vinyl Acetate | 15 | U |
| 75-27-4 | Bromodichloromethane | 7 | U |
| 78-87-5 | 1,2-Dichloropropane | 7 | U |
| 10061-02-6 | trans-1,3-Dichloropropene | 7 | U |
| 79-01-6 | Trichloroethene | 7 | U |
| 124-48-1 | Dibromochloromethane | 7 | U |
| 79-00-5 | 1,1,2-Trichloroethane | 7 | U |
| 71-43-2 | Benzene | 7 | U |
| 10061-01-5 | cis-1,3-Dichloropropene | 7 | U |
| 75-25-2 | Bromoform | 7 | U |
| 591-78-6 | 2-Hexanone | 15 | U |
| 108-10-1 | 4-Methyl-2-Pentanone | 15 | U |
| 127-18-4 | Tetrachloroethene | 9 | |
| 79-34-5 | 1,1,2,2-Tetrachloroethane | 7 | U |
| 108-88-3 | Toluene | 7 | U |
| 108-90-7 | Chlorobenzene | 7 | U |
| 100-41-4 | Ethylbenzene | 7 | U |
| 100-42-5 | Styrene | 7 | U |
| 1330-20-7 | Xylene (total) | 7 | U |

1E

# VOLATILE ORGANICS ANALYSIS DATA SHEET
## TENTATIVELY IDENTIFIED COMPOUNDS

EPA SAMPLE NO.

EKH58

Lab Name: S-CUBED Contract: 68-D9-0027

Lab Code: S3 Case No.: 14906 SAS No.: SDG No.: EKH56

Matrix: (soil/water) SOIL Lab Sample ID: EKH58

Sample wt/vol: 5.000 (g/mL) G Lab File ID: EKH58

Level: (low/med) LOW Date Received: 09/19/90

% Moisture: not dec. 33 Date Analyzed: 09/26/90

Column: (pack/cap) PACK Dilution Factor: 1.000

Number TICs found: 0

CONCENTRATION UNITS:
(ug/L or ug/Kg) UG/KG

| CAS NUMBER | COMPOUND NAME | RT | EST. CONC. | Q |
|---|---|---|---|---|
| 1. | | | | |
| 2. | | | | |
| 3. | | | | |
| 4. | | | | |
| 5. | | | | |
| 6. | | | | |
| 7. | | | | |
| 8. | | | | |
| 9. | | | | |
| 10. | | | | |
| 11. | | | | |
| 12. | | | | |
| 13. | | | | |
| 14. | | | | |
| 15. | | | | |
| 16. | | | | |
| 17. | | | | |
| 18. | | | | |
| 19. | | | | |
| 20. | | | | |
| 21. | | | | |
| 22. | | | | |
| 23. | | | | |
| 24. | | | | |
| 25. | | | | |
| 26. | | | | |
| 27. | | | | |
| 28. | | | | |
| 29. | | | | |
| 30. | | | | |

1A
VOLATILE ORGANICS ANALYSIS DATA SHEET

EPA SAMPLE NO.

EKH59

Lab Name: S-CUBED Contract: 68-D9-0027

Lab Code: S3 Case No.: 14906 SAS No.: SDG No.: EKH56

Matrix: (soil/water) SOIL Lab Sample ID: EKH59

Sample wt/vol: 5.000 (g/mL) G Lab File ID: EKH59

Level: (low/med) LOW Date Received: 09/19/90

% Moisture: not dec. 74 Date Analyzed: 09/26/90

Column: (pack/cap) PACK Dilution Factor: 1.000

| CAS NO. | COMPOUND | CONCENTRATION UNITS: (ug/L or ug/Kg) UG/KG | Q |
|---|---|---|---|
| 74-87-3 | Chloromethane | 39 | U |
| 74-83-9 | Bromomethane | 39 | U |
| 75-01-4 | Vinyl Chloride | 39 | U |
| 75-00-3 | Chloroethane | 39 | U |
| 75-09-2 | Methylene Chloride | 35 | ~~B~~ |
| 67-64-1 | Acetone | 39 | U |
| 75-15-0 | Carbon Disulfide | 19 | U |
| 75-35-4 | 1,1-Dichloroethene | 19 | U |
| 75-34-3 | 1,1-Dichloroethane | 19 | U |
| 540-59-0 | 1,2-Dichloroethene (Total) | 19 | U |
| 67-66-3 | Chloroform | 19 | U |
| 107-06-2 | 1,2-Dichloroethane | 19 | U |
| 78-93-3 | 2-Butanone | 39 | U |
| 71-55-6 | 1,1,1-Trichloroethane | 19 | U |
| 56-23-5 | Carbon Tetrachloride | 19 | U |
| 108-05-4 | Vinyl Acetate | 39 | U |
| 75-27-4 | Bromodichloromethane | 19 | U |
| 78-87-5 | 1,2-Dichloropropane | 19 | U |
| 10061-02-6 | trans-1,3-Dichloropropene | 19 | U |
| 79-01-6 | Trichloroethene | 19 | U |
| 124-48-1 | Dibromochloromethane | 19 | U |
| 79-00-5 | 1,1,2-Trichloroethane | 19 | U |
| 71-43-2 | Benzene | 19 | U |
| 10061-01-5 | cis-1,3-Dichloropropene | 19 | U |
| 75-25-2 | Bromoform | 19 | U |
| 591-78-6 | 2-Hexanone | 39 | U |
| 108-10-1 | 4-Methyl-2-Pentanone | 39 | U |
| 127-18-4 | Tetrachloroethene | 19 | U |
| 79-34-5 | 1,1,2,2-Tetrachloroethane | 19 | U |
| 108-88-3 | Toluene | 19 | U |
| 108-90-7 | Chlorobenzene | 19 | U |
| 100-41-4 | Ethylbenzene | 19 | U |
| 100-42-5 | Styrene | 19 | U |
| 1330-20-7 | Xylene (total) | 19 | U |

WDW 11/28/90

1E
VOLATILE ORGANICS ANALYSIS DATA SHEET
TENTATIVELY IDENTIFIED COMPOUNDS

EPA SAMPLE NO.

EKH59

Lab Name: S-CUBED Contract: 68-D9-0027

Lab Code: S3 Case No.: 14906 SAS No.: SDG No.: EKH56

Matrix: (soil/water) SOIL Lab Sample ID: EKH59

Sample wt/vol: 5.000 (g/mL) G Lab File ID: EKH59

Level: (low/med) LOW Date Received: 09/19/90

% Moisture: not dec. 74 Date Analyzed: 09/26/90

Column: (pack/cap) PACK Dilution Factor: 1.000

Number TICs found: 0

CONCENTRATION UNITS:
(ug/L or ug/Kg) UG/KG

| | CAS NUMBER | COMPOUND NAME | RT | EST. CONC. | Q |
|---|---|---|---|---|---|
| 1. | | | | | |
| 2. | | | | | |
| 3. | | | | | |
| 4. | | | | | |
| 5. | | | | | |
| 6. | | | | | |
| 7. | | | | | |
| 8. | | | | | |
| 9. | | | | | |
| 10. | | | | | |
| 11. | | | | | |
| 12. | | | | | |
| 13. | | | | | |
| 14. | | | | | |
| 15. | | | | | |
| 16. | | | | | |
| 17. | | | | | |
| 18. | | | | | |
| 19. | | | | | |
| 20. | | | | | |
| 21. | | | | | |
| 22. | | | | | |
| 23. | | | | | |
| 24. | | | | | |
| 25. | | | | | |
| 26. | | | | | |
| 27. | | | | | |
| 28. | | | | | |
| 29. | | | | | |
| 30. | | | | | |

FORM I VOA-TIC 1/87 Rev.

1A
VOLATILE ORGANICS ANALYSIS DATA SHEET

EPA SAMPLE NO.

EKH60

Lab Name: S-CUBED Contract: 68-D9-0027

Lab Code: S3 Case No.: 14906 SAS No.: SDG No.: EKH56

Matrix: (soil/water) SOIL Lab Sample ID: EKH60

Sample wt/vol: 5.000 (g/mL) G Lab File ID: EKH60

Level: (low/med) LOW Date Received: 09/19/90

% Moisture: not dec. 16 Date Analyzed: 09/25/90

Column: (pack/cap) PACK Dilution Factor: 1.000

| CAS NO. | COMPOUND | CONCENTRATION UNITS: (ug/L or ug/Kg) UG/KG | Q |
|---|---|---|---|
| 74-87-3 | Chloromethane | 12 | U |
| 74-83-9 | Bromomethane | 12 | U |
| 75-01-4 | Vinyl Chloride | 12 | U |
| 75-00-3 | Chloroethane | 12 | U |
| 75-09-2 | Methylene Chloride | 7 | BU 11/28/90 |
| 67-64-1 | Acetone | 12 | U |
| 75-15-0 | Carbon Disulfide | 6 | U |
| 75-35-4 | 1,1-Dichloroethene | 6 | U |
| 75-34-3 | 1,1-Dichloroethane | 6 | U |
| 540-59-0 | 1,2-Dichloroethene (Total) | 6 | U |
| 67-66-3 | Chloroform | 6 | U |
| 107-06-2 | 1,2-Dichloroethane | 6 | U |
| 78-93-3 | 2-Butanone | 12 | U |
| 71-55-6 | 1,1,1-Trichloroethane | 6 | U |
| 56-23-5 | Carbon Tetrachloride | 6 | U |
| 108-05-4 | Vinyl Acetate | 12 | U |
| 75-27-4 | Bromodichloromethane | 6 | U |
| 78-87-5 | 1,2-Dichloropropane | 6 | U |
| 10061-02-6 | trans-1,3-Dichloropropene | 6 | U |
| 79-01-6 | Trichloroethene | 8 | |
| 124-48-1 | Dibromochloromethane | 6 | U |
| 79-00-5 | 1,1,2-Trichloroethane | 6 | U |
| 71-43-2 | Benzene | 6 | U |
| 10061-01-5 | cis-1,3-Dichloropropene | 6 | U |
| 75-25-2 | Bromoform | 6 | U |
| 591-78-6 | 2-Hexanone | 12 | U |
| 108-10-1 | 4-Methyl-2-Pentanone | 12 | U |
| 127-18-4 | Tetrachloroethene | 5 | J |
| 79-34-5 | 1,1,2,2-Tetrachloroethane | 6 | U |
| 108-88-3 | Toluene | 6 | U |
| 108-90-7 | Chlorobenzene | 6 | U |
| 100-41-4 | Ethylbenzene | 6 | U |
| 100-42-5 | Styrene | 6 | U |
| 1330-20-7 | Xylene (total) | 6 | U |

1E
VOLATILE ORGANICS ANALYSIS DATA SHEET
TENTATIVELY IDENTIFIED COMPOUNDS

EPA SAMPLE NO.

EKH60

Lab Name: S-CUBED Contract: 68-D9-0027

Lab Code: S3 Case No.: 14906 SAS No.: SDG No.: EKH56

Matrix: (soil/water) SOIL Lab Sample ID: EKH60

Sample wt/vol: 5.000 (g/mL) G Lab File ID: EKH60

Level: (low/med) LOW Date Received: 09/19/90

% Moisture: not dec. 16 Date Analyzed: 09/25/90

Column: (pack/cap) PACK Dilution Factor: 1.000

Number TICs found: 0

CONCENTRATION UNITS:
(ug/L or ug/Kg) UG/KG

| | CAS NUMBER | COMPOUND NAME | RT | EST. CONC. | Q |
|---|---|---|---|---|---|
| 1. | | | | | |
| 2. | | | | | |
| 3. | | | | | |
| 4. | | | | | |
| 5. | | | | | |
| 6. | | | | | |
| 7. | | | | | |
| 8. | | | | | |
| 9. | | | | | |
| 10. | | | | | |
| 11. | | | | | |
| 12. | | | | | |
| 13. | | | | | |
| 14. | | | | | |
| 15. | | | | | |
| 16. | | | | | |
| 17. | | | | | |
| 18. | | | | | |
| 19. | | | | | |
| 20. | | | | | |
| 21. | | | | | |
| 22. | | | | | |
| 23. | | | | | |
| 24. | | | | | |
| 25. | | | | | |
| 26. | | | | | |
| 27. | | | | | |
| 28. | | | | | |
| 29. | | | | | |
| 30. | | | | | |

1A
VOLATILE ORGANICS ANALYSIS DATA SHEET

EPA SAMPLE NO.

EKH61

Lab Name: S-CUBED Contract: 68-D9-0027

Lab Code: S3 Case No.: 14906 SAS No.: SDG No.: EKH56

Matrix: (soil/water) SOIL Lab Sample ID: EKH61

Sample wt/vol: 5.000 (g/mL) G Lab File ID: EKH61

Level: (low/med) LOW Date Received: 09/19/90

% Moisture: not dec. 15 Date Analyzed: 09/26/90

Column: (pack/cap) PACK Dilution Factor: 1.000

| CAS NO. | COMPOUND | CONCENTRATION UNITS: (ug/L or ug/Kg) UG/KG | Q |
|---|---|---|---|
| 74-87-3 | Chloromethane | 12 | U |
| 74-83-9 | Bromomethane | 12 | U |
| 75-01-4 | Vinyl Chloride | 12 | U |
| 75-00-3 | Chloroethane | 12 | U |
| 75-09-2 | Methylene Chloride | 12 | ~~B~~ U 11/28/90 |
| 67-64-1 | Acetone | 12 | U |
| 75-15-0 | Carbon Disulfide | 6 | U |
| 75-35-4 | 1,1-Dichloroethene | 6 | U |
| 75-34-3 | 1,1-Dichloroethane | 6 | U |
| 540-59-0 | 1,2-Dichloroethene (Total) | 6 | U |
| 67-66-3 | Chloroform | 6 | U |
| 107-06-2 | 1,2-Dichloroethane | 6 | U |
| 78-93-3 | 2-Butanone | 12 | U |
| 71-55-6 | 1,1,1-Trichloroethane | 6 | U |
| 56-23-5 | Carbon Tetrachloride | 6 | U |
| 108-05-4 | Vinyl Acetate | 12 | U |
| 75-27-4 | Bromodichloromethane | 6 | U |
| 78-87-5 | 1,2-Dichloropropane | 6 | U |
| 10061-02-6 | trans-1,3-Dichloropropene | 6 | U |
| 79-01-6 | Trichloroethene | 1 | J |
| 124-48-1 | Dibromochloromethane | 6 | U |
| 79-00-5 | 1,1,2-Trichloroethane | 6 | U |
| 71-43-2 | Benzene | 6 | U |
| 10061-01-5 | cis-1,3-Dichloropropene | 6 | U |
| 75-25-2 | Bromoform | 6 | U |
| 591-78-6 | 2-Hexanone | 12 | U |
| 108-10-1 | 4-Methyl-2-Pentanone | 12 | U |
| 127-18-4 | Tetrachloroethene | 25 | |
| 79-34-5 | 1,1,2,2-Tetrachloroethane | 6 | U |
| 108-88-3 | Toluene | 3 | J |
| 108-90-7 | Chlorobenzene | 6 | U |
| 100-41-4 | Ethylbenzene | 6 | U |
| 100-42-5 | Styrene | 6 | U |
| 1330-20-7 | Xylene (total) | 6 | U |

1E
VOLATILE ORGANICS ANALYSIS DATA SHEET
TENTATIVELY IDENTIFIED COMPOUNDS

EPA SAMPLE NO.

EKH61

Lab Name: S-CUBED Contract: 68-D9-0027

Lab Code: S3 Case No.: 14906 SAS No.: SDG No.: EKH56

Matrix: (soil/water) SOIL Lab Sample ID: EKH61

Sample wt/vol: 5.000 (g/mL) G Lab File ID: EKH61

Level: (low/med) LOW Date Received: 09/19/90

% Moisture: not dec. 15 Date Analyzed: 09/26/90

Column: (pack/cap) PACK Dilution Factor: 1.000

Number TICs found: 0

CONCENTRATION UNITS:
(ug/L or ug/Kg) UG/KG

| | CAS NUMBER | COMPOUND NAME | RT | EST. CONC. | Q |
|---|---|---|---|---|---|
| 1. | | | | | |
| 2. | | | | | |
| 3. | | | | | |
| 4. | | | | | |
| 5. | | | | | |
| 6. | | | | | |
| 7. | | | | | |
| 8. | | | | | |
| 9. | | | | | |
| 10. | | | | | |
| 11. | | | | | |
| 12. | | | | | |
| 13. | | | | | |
| 14. | | | | | |
| 15. | | | | | |
| 16. | | | | | |
| 17. | | | | | |
| 18. | | | | | |
| 19. | | | | | |
| 20. | | | | | |
| 21. | | | | | |
| 22. | | | | | |
| 23. | | | | | |
| 24. | | | | | |
| 25. | | | | | |
| 26. | | | | | |
| 27. | | | | | |
| 28. | | | | | |
| 29. | | | | | |
| 30. | | | | | |

1A
VOLATILE ORGANICS ANALYSIS DATA SHEET

EPA SAMPLE NO.

EKH62

Lab Name: S-CUBED Contract: 68-D9-0027

Lab Code: S3 Case No.: 14906 SAS No.: SDG No.: EKH56

Matrix: (soil/water) SOIL Lab Sample ID: EKH62

Sample wt/vol: 5.000 (g/mL) G Lab File ID: EKH62

Level: (low/med) LOW Date Received: 09/19/90

% Moisture: not dec. 23 Date Analyzed: 09/26/90

Column: (pack/cap) PACK Dilution Factor: 1.000

| CAS NO. | COMPOUND | CONCENTRATION UNITS: (ug/L or ug/Kg) UG/KG | Q |
|---|---|---|---|
| 74-87-3 | Chloromethane | 13 | U |
| 74-83-9 | Bromomethane | 13 | U |
| 75-01-4 | Vinyl Chloride | 13 | U |
| 75-00-3 | Chloroethane | 13 | U |
| 75-09-2 | Methylene Chloride | 11 | ~~B~~ U 11/28/90 |
| 67-64-1 | Acetone | 13 | U |
| 75-15-0 | Carbon Disulfide | 6 | U |
| 75-35-4 | 1,1-Dichloroethene | 6 | U |
| 75-34-3 | 1,1-Dichloroethane | 6 | U |
| 540-59-0 | 1,2-Dichloroethene (Total) | 6 | U |
| 67-66-3 | Chloroform | 6 | U |
| 107-06-2 | 1,2-Dichloroethane | 6 | U |
| 78-93-3 | 2-Butanone | 13 | U |
| 71-55-6 | 1,1,1-Trichloroethane | 6 | U |
| 56-23-5 | Carbon Tetrachloride | 6 | U |
| 108-05-4 | Vinyl Acetate | 13 | U |
| 75-27-4 | Bromodichloromethane | 6 | U |
| 78-87-5 | 1,2-Dichloropropane | 6 | U |
| 10061-02-6 | trans-1,3-Dichloropropene | 6 | U |
| 79-01-6 | Trichloroethene | 6 | U |
| 124-48-1 | Dibromochloromethane | 6 | U |
| 79-00-5 | 1,1,2-Trichloroethane | 6 | U |
| 71-43-2 | Benzene | 6 | U |
| 10061-01-5 | cis-1,3-Dichloropropene | 6 | U |
| 75-25-2 | Bromoform | 6 | U |
| 591-78-6 | 2-Hexanone | 13 | U |
| 108-10-1 | 4-Methyl-2-Pentanone | 13 | U |
| 127-18-4 | Tetrachloroethene | 12 | |
| 79-34-5 | 1,1,2,2-Tetrachloroethane | 6 | U |
| 108-88-3 | Toluene | 6 | U |
| 108-90-7 | Chlorobenzene | 6 | U |
| 100-41-4 | Ethylbenzene | 6 | U |
| 100-42-5 | Styrene | 6 | U |
| 1330-20-7 | Xylene (total) | 6 | U |

1E

# VOLATILE ORGANICS ANALYSIS DATA SHEET
## TENTATIVELY IDENTIFIED COMPOUNDS

EPA SAMPLE NO.

EKH62

Lab Name: S-CUBED Contract: 68-D9-0027

Lab Code: S3 Case No.: 14906 SAS No.: SDG No.: EKH56

Matrix: (soil/water) SOIL Lab Sample ID: EKH62

Sample wt/vol: 5.000 (g/mL) G Lab File ID: EKH62

Level: (low/med) LOW Date Received: 09/19/90

% Moisture: not dec. 23 Date Analyzed: 09/26/90

Column: (pack/cap) PACK Dilution Factor: 1.000

Number TICs found: 0

CONCENTRATION UNITS:
(ug/L or ug/Kg) UG/KG

| CAS NUMBER | COMPOUND NAME | RT | EST. CONC. | Q |
|---|---|---|---|---|
| 1. | | | | |
| 2. | | | | |
| 3. | | | | |
| 4. | | | | |
| 5. | | | | |
| 6. | | | | |
| 7. | | | | |
| 8. | | | | |
| 9. | | | | |
| 10. | | | | |
| 11. | | | | |
| 12. | | | | |
| 13. | | | | |
| 14. | | | | |
| 15. | | | | |
| 16. | | | | |
| 17. | | | | |
| 18. | | | | |
| 19. | | | | |
| 20. | | | | |
| 21. | | | | |
| 22. | | | | |
| 23. | | | | |
| 24. | | | | |
| 25. | | | | |
| 26. | | | | |
| 27. | | | | |
| 28. | | | | |
| 29. | | | | |
| 30. | | | | |

FORM I VOA-TIC 1/87 Rev.

1B
SEMIVOLATILE ORGANICS ANALYSIS DATA SHEET

EPA SAMPLE NO.

EKH56

Lab Name: S-CUBED Contract: 68-D9-0027

Lab Code: S3 Case No.: 14906 SAS No.: SDG No.: EKH56

Matrix: (soil/water) SOIL Lab Sample ID: EKH56

Sample wt/vol: 30.0 (g/mL) G Lab File ID: EKH56

Level: (low/med) LOW Date Received: 09/19/90

% Moisture: not dec. 32 dec._____ Date Extracted: 09/25/90

Extraction: (SepF/Cont/Sonc) SONC Date Analyzed: 10/10/90

GPC Cleanup: (Y/N) Y pH: 8.2 Dilution Factor: 1.000

| CAS NO. | COMPOUND | CONCENTRATION UNITS: (ug/L or ug/Kg) UG/KG | Q |
|---|---|---|---|
| 108-95-2 | Phenol | 970 | U |
| 111-44-4 | bis(2-Chloroethyl)ether | 970 | U |
| 95-57-8 | 2-Chlorophenol | 970 | U |
| 541-73-1 | 1,3-Dichlorobenzene | 970 | U |
| 106-46-7 | 1,4-Dichlorobenzene | 970 | U |
| 100-51-6 | Benzyl alcohol | 970 | U |
| 95-50-1 | 1,2-Dichlorobenzene | 970 | U |
| 95-48-7 | 2-Methylphenol | 970 | U |
| 108-60-1 | bis(2-Chloroisopropyl)ether | 970 | U |
| 106-44-5 | 4-Methylphenol | 970 | U |
| 621-64-7 | N-Nitroso-di-n-propylamine | 970 | U |
| 67-72-1 | Hexachloroethane | 970 | U |
| 98-95-3 | Nitrobenzene | 970 | U |
| 78-59-1 | Isophorone | 970 | U |
| 88-75-5 | 2-Nitrophenol | 970 | U |
| 105-67-9 | 2,4-Dimethylphenol | 970 | U |
| 65-85-0 | Benzoic acid | 4700 | U |
| 111-91-1 | bis(2-Chloroethoxy)methane | 970 | U |
| 120-83-2 | 2,4-Dichlorophenol | 970 | U |
| 120-82-1 | 1,2,4-Trichlorobenzene | 970 | U |
| 91-20-3 | Naphthalene | 970 | U |
| 106-47-8 | 4-Chloroaniline | 970 | U |
| 87-68-3 | Hexachlorobutadiene | 970 | U |
| 59-50-7 | 4-Chloro-3-methylphenol | 970 | U |
| 91-57-6 | 2-Methylnaphthalene | 970 | U |
| 77-47-4 | Hexachlorocyclopentadiene | 970 | U |
| 88-06-2 | 2,4,6-Trichlorophenol | 970 | U |
| 95-95-4 | 2,4,5-Trichlorophenol | 4700 | U |
| 91-58-7 | 2-Chloronaphthalene | 970 | U |
| 88-74-4 | 2-Nitroaniline | 4700 | U |
| 131-11-3 | Dimethylphthalate | 970 | U |
| 208-96-8 | Acenaphthylene | 970 | U |
| 606-20-2 | 2,6-Dinitrotoluene | 970 | U |

1C
SEMIVOLATILE ORGANICS ANALYSIS DATA SHEET

EPA SAMPLE NO.

EKH56

Lab Name: S-CUBED Contract: 68-D9-0027

Lab Code: S3 Case No.: 14906 SAS No.: SDG No.: EKH56

Matrix: (soil/water) SOIL Lab Sample ID: EKH56

Sample wt/vol: 30.0 (g/mL) G Lab File ID: EKH56

Level: (low/med) LOW Date Received: 09/19/90

% Moisture: not dec. 32 dec._____ Date Extracted: 09/25/90

Extraction: (SepF/Cont/Sonc) SONC Date Analyzed: 10/10/90

GPC Cleanup: (Y/N) Y pH: 8.2 Dilution Factor: 1.000

| CAS NO. | COMPOUND | CONCENTRATION UNITS: (ug/L or ug/Kg) UG/KG | Q |
|---|---|---|---|
| 99-09-2 | 3-Nitroaniline | 4700 | U |
| 83-32-9 | Acenapthene | 970 | U |
| 51-28-5 | 2,4-Dinitrophenol | 4700 | U |
| 100-02-7 | 4-Nitrophenol | 4700 | U |
| 132-64-9 | Dibenzofuran | 970 | U |
| 121-14-2 | 2,4-Dinitrotoluene | 970 | U |
| 84-66-2 | Diethylphthalate | 970 | U |
| 7005-72-3 | 4-Chlorophenyl-phenylether | 970 | U |
| 86-73-7 | Fluorene | 970 | U |
| 100-01-6 | 4-Nitroaniline | 4700 | U |
| 534-52-1 | 4,6-Dinitro-2-methylphenol | 4700 | U |
| 86-30-6 | N-Nitrosodiphenylamine (1) | 970 | U |
| 101-55-3 | 4-Bromophenyl-phenylether | 970 | U |
| 118-74-1 | Hexachlorobenzene | 970 | U |
| 87-86-5 | Pentachlorophenol | 4700 | U |
| 85-01-8 | Phenanthrene | 970 | U |
| 120-12-7 | Anthracene | 970 | U |
| 84-74-2 | Di-n-butylphthalate | 970 | U |
| 206-44-0 | Fluoranthene | 970 | U |
| 129-00-0 | Pyrene | 970 | U |
| 85-68-7 | Butylbenzylphthalate | 970 | U |
| 91-94-1 | 3,3'-Dichlorobenzidine | 1900 | U |
| 56-55-3 | Benzo(a)anthracene | 970 | U |
| 218-01-9 | Chrysene | 970 | U |
| 117-81-7 | bis(2-Ethylhexyl)phthalate | 2200 | |
| 117-84-0 | Di-n-octylphthalate | 970 | U |
| 205-99-2 | Benzo(b)fluoranthene | 970 | U |
| 207-08-9 | Benzo(k)fluoranthene | 970 | U |
| 50-32-8 | Benzo(a)pyrene | 970 | U |
| 193-39-5 | Indeno(1,2,3-cd)pyrene | 970 | U |
| 53-70-3 | Dibenz(a,h)anthracene | 970 | U |
| 191-24-2 | Benzo(g,h,i)perylene | 970 | U |

(1) - Cannot be separated from Diphenylamine

1F

SEMIVOLATILE ORGANICS ANALYSIS DATA SHEET
TENTATIVELY IDENTIFIED COMPOUNDS

EPA SAMPLE NO.

EKH56

Lab Name: S-CUBED Contract: 68-D9-0027

Lab Code: S3 Case No.: 14906 SAS No.: SDG No.: EKH56

Matrix: (soil/water) SOIL Lab Sample ID: EKH56

Sample wt/vol: 30.0 (g/mL) G Lab File ID: EKH56

Level: (low/med) LOW Date Received: 09/19/90

% Moisture: not dec. 32 dec._____ Date Extracted: 09/25/90

Extraction: (SepF/Cont/Sonc) SONC Date Analyzed: 10/10/90

GPC Cleanup : (Y/N) Y pH: 8.2 Dilution Factor: 1.000

Number TICs found: 20

CONCENTRATION UNITS:
(ug/L or ug/Kg) UG/KG

| CAS NUMBER | COMPOUND NAME | RT | EST. CONC. | Q |
|---|---|---|---|---|
| 1. | UNKNOWN | 7.54 | 3200 | ~~JB~~ U 4 upstro |
| 2.00100-52-7 | BENZALDEHYDE | 10.66 | 2100 | J |
| 3. | UNKNOWN HYDROCARBON | 11.69 | 850 | J |
| 4. | UNKNOWN HYDROCARBON | 16.02 | 1100 | J |
| 5. | UNKNOWN HYDROCARBON | 17.93 | 1600 | J |
| 6. | UNKNOWN HYDROCARBON | 19.72 | 1700 | J |
| 7. | UNKNOWN HYDROCARBON | 20.77 | 810 | J |
| 8. | UNKNOWN HYDROCARBON | 21.39 | 1500 | J |
| 9. | UNKNOWN HYDROCARBON | 22.99 | 1300 | J |
| 10. | UNKNOWN HYDROCARBON | 24.49 | 1800 | J |
| 11. | UNKNOWN HYDROCARBON | 24.59 | 2600 | J |
| 12. | UNKNOWN | 24.80 | 840 | J |
| 13. | UNKNOWN | 25.11 | 690 | J |
| 14. | UNKNOWN HYDROCARBON | 26.08 | 3400 | J |
| 15. | UNKNOWN | 26.89 | 830 | J |
| 16. | UNKNOWN HYDROCARBON | 27.20 | 1300 | J |
| 17. | UNKNOWN HYDROCARBON | 27.30 | 2300 | J |
| 18. | UNKNOWN HYDROCARBON | 28.61 | 2900 | J |
| 19. | UNKNOWN HYDROCARBON | 29.85 | 2400 | J |
| 20. | UNKNOWN HYDROCARBON | 31.48 | 3000 | J |
| 21. | | | | |
| 22. | | | | |
| 23. | | | | |
| 24. | | | | |
| 25. | | | | |
| 26. | | | | |
| 27. | | | | |
| 28. | | | | |
| 29. | | | | |
| 30. | | | | |

1B
SEMIVOLATILE ORGANICS ANALYSIS DATA SHEET

EPA SAMPLE NO.

EKH56RE

Lab Name: S-CUBED Contract: 68-D9-0027

Lab Code: S3 Case No.: 14906 SAS No.: SDG No.: EKH56

Matrix: (soil/water) SOIL Lab Sample ID: RRH56

Sample wt/vol: 30.0 (g/mL) G Lab File ID: RRH56

Level: (low/med) LOW Date Received: 09/19/90

% Moisture: not dec. 32 dec._____ Date Extracted: 09/25/90

Extraction: (SepF/Cont/Sonc) SONC Date Analyzed: 10/12/90

GPC Cleanup: (Y/N) Y pH: 8.2 Dilution Factor: 1.000

| CAS NO. | COMPOUND | CONCENTRATION UNITS: (ug/L or ug/Kg) UG/KG | Q |
|---|---|---|---|
| 108-95-2 | Phenol | 970 | U |
| 111-44-4 | bis(2-Chloroethyl)ether | 970 | U |
| 95-57-8 | 2-Chlorophenol | 970 | U |
| 541-73-1 | 1,3-Dichlorobenzene | 970 | U |
| 106-46-7 | 1,4-Dichlorobenzene | 970 | U |
| 100-51-6 | Benzyl alcohol | 970 | U |
| 95-50-1 | 1,2-Dichlorobenzene | 970 | U |
| 95-48-7 | 2-Methylphenol | 970 | U |
| 108-60-1 | bis(2-Chloroisopropyl)ether | 970 | U |
| 106-44-5 | 4-Methylphenol | 970 | U |
| 621-64-7 | N-Nitroso-di-n-propylamine | 970 | U |
| 67-72-1 | Hexachloroethane | 970 | U |
| 98-95-3 | Nitrobenzene | 970 | U |
| 78-59-1 | Isophorone | 970 | U |
| 88-75-5 | 2-Nitrophenol | 970 | U |
| 105-67-9 | 2,4-Dimethylphenol | 970 | U |
| 65-85-0 | Benzoic acid | 4700 | U |
| 111-91-1 | bis(2-Chloroethoxy)methane | 970 | U |
| 120-83-2 | 2,4-Dichlorophenol | 970 | U |
| 120-82-1 | 1,2,4-Trichlorobenzene | 970 | U |
| 91-20-3 | Naphthalene | 970 | U |
| 106-47-8 | 4-Chloroaniline | 970 | U |
| 87-68-3 | Hexachlorobutadiene | 970 | U |
| 59-50-7 | 4-Chloro-3-methylphenol | 970 | U |
| 91-57-6 | 2-Methylnaphthalene | 970 | U |
| 77-47-4 | Hexachlorocyclopentadiene | 970 | U |
| 88-06-2 | 2,4,6-Trichlorophenol | 970 | U |
| 95-95-4 | 2,4,5-Trichlorophenol | 4700 | U |
| 91-58-7 | 2-Chloronaphthalene | 970 | U |
| 88-74-4 | 2-Nitroaniline | 4700 | U |
| 131-11-3 | Dimethylphthalate | 970 | U |
| 208-96-8 | Acenaphthylene | 970 | U |
| 606-20-2 | 2,6-Dinitrotoluene | 970 | U |

1C
SEMIVOLATILE ORGANICS ANALYSIS DATA SHEET

EPA SAMPLE NO.

EKH56RE

Lab Name: S-CUBED Contract: 68-D9-0027

Lab Code: S3 Case No.: 14906 SAS No.: SDG No.: EKH56

Matrix: (soil/water) SOIL Lab Sample ID: RRH56

Sample wt/vol: 30.0 (g/mL) G Lab File ID: RRH56

Level: (low/med) LOW Date Received: 09/19/90

% Moisture: not dec. 32 dec._____ Date Extracted: 09/25/90

Extraction: (SepF/Cont/Sonc) SONC Date Analyzed: 10/12/90

GPC Cleanup: (Y/N) Y pH: 8.2 Dilution Factor: 1.000

| CAS NO. | COMPOUND | CONCENTRATION UNITS: (ug/L or ug/Kg) UG/KG | Q |
|---|---|---|---|
| 99-09-2 | 3-Nitroaniline | 4700 | U |
| 83-32-9 | Acenapthene | 970 | U |
| 51-28-5 | 2,4-Dinitrophenol | 4700 | U |
| 100-02-7 | 4-Nitrophenol | 4700 | U |
| 132-64-9 | Dibenzofuran | 970 | U |
| 121-14-2 | 2,4-Dinitrotoluene | 970 | U |
| 84-66-2 | Diethylphthalate | 970 | U |
| 7005-72-3 | 4-Chlorophenyl-phenylether | 970 | U |
| 86-73-7 | Fluorene | 970 | U |
| 100-01-6 | 4-Nitroaniline | 4700 | U |
| 534-52-1 | 4,6-Dinitro-2-methylphenol | 4700 | U |
| 86-30-6 | N-Nitrosodiphenylamine (1) | 970 | U |
| 101-55-3 | 4-Bromophenyl-phenylether | 970 | U |
| 118-74-1 | Hexachlorobenzene | 970 | U |
| 87-86-5 | Pentachlorophenol | 4700 | U |
| 85-01-8 | Phenanthrene | 970 | U |
| 120-12-7 | Anthracene | 970 | U |
| 84-74-2 | Di-n-butylphthalate | 970 | U |
| 206-44-0 | Fluoranthene | 970 | U |
| 129-00-0 | Pyrene | 970 | U |
| 85-68-7 | Butylbenzylphthalate | 970 | U |
| 91-94-1 | 3,3'-Dichlorobenzidine | 1900 | U |
| 56-55-3 | Benzo(a)anthracene | 970 | U |
| 218-01-9 | Chrysene | 970 | U |
| 117-81-7 | bis(2-Ethylhexyl)phthalate | 2300 | |
| 117-84-0 | Di-n-octylphthalate | 970 | U |
| 205-99-2 | Benzo(b)fluoranthene | 970 | U |
| 207-08-9 | Benzo(k)fluoranthene | 970 | U |
| 50-32-8 | Benzo(a)pyrene | 970 | U |
| 193-39-5 | Indeno(1,2,3-cd)pyrene | 970 | U |
| 53-70-3 | Dibenz(a,h)anthracene | 970 | U |
| 191-24-2 | Benzo(g,h,i)perylene | 970 | U |

(1) - Cannot be separated from Diphenylamine

1F

# SEMIVOLATILE ORGANICS ANALYSIS DATA SHEET
## TENTATIVELY IDENTIFIED COMPOUNDS

EPA SAMPLE NO.

EKH56RE

Lab Name: S-CUBED Contract: 68-D9-0027

Lab Code: S3 Case No.: 14906 SAS No.: SDG No.: EKH56

Matrix: (soil/water) SOIL Lab Sample ID: RRH56

Sample wt/vol: 30.0 (g/mL) G Lab File ID: RRH56

Level: (low/med) LOW Date Received: 09/19/90

% Moisture: not dec. 32 dec._____ Date Extracted: 09/25/90

Extraction: (SepF/Cont/Sonc) SONC Date Analyzed: 10/12/90

GPC Cleanup : (Y/N) Y pH: 8.2 Dilution Factor: 1.000

Number TICs found: 20

CONCENTRATION UNITS:
(ug/L or ug/Kg) UG/KG

| CAS NUMBER | COMPOUND NAME | RT | EST. CONC. | Q |
|---|---|---|---|---|
| 1. | UNKNOWN | 7.47 | 3000 | JBU 11/28/90 |
| 2. 00100-52-7 | BENZALDEHYDE | 10.60 | 2100 | J |
| 3. | UNKNOWN HYDROCARBON | 11.66 | 880 | J |
| 4. | UNKNOWN HYDROCARBON | 13.93 | 540 | J |
| 5. | UNKNOWN HYDROCARBON | 15.99 | 1100 | J |
| 6. | UNKNOWN HYDROCARBON | 16.26 | 520 | J |
| 7. | UNKNOWN | 16.51 | 480 | J |
| 8. | UNKNOWN | 16.79 | 590 | J |
| 9. | UNKNOWN | 17.14 | 480 | J |
| 10. | UNKNOWN HYDROCARBON | 17.39 | 580 | J |
| 11. | UNKNOWN HYDROCARBON | 17.89 | 1500 | J |
| 12. | UNKNOWN HYDROCARBON | 19.68 | 1600 | J |
| 13. | UNKNOWN HYDROCARBON | 20.74 | 750 | J |
| 14. | UNKNOWN HYDROCARBON | 21.35 | 1300 | J |
| 15. | UNKNOWN HYDROCARBON | 22.95 | 1200 | J |
| 16. | UNKNOWN | 23.11 | 590 | J |
| 17. | UNKNOWN | 23.90 | 470 | J |
| 18. | UNKNOWN HYDROCARBON | 24.55 | 2900 | J |
| 19. | UNKNOWN | 24.77 | 960 | J |
| 20. | UNKNOWN HYDROCARBON | 26.04 | 3500 | J |
| 21. | | | | |
| 22. | | | | |
| 23. | | | | |
| 24. | | | | |
| 25. | | | | |
| 26. | | | | |
| 27. | | | | |
| 28. | | | | |
| 29. | | | | |
| 30. | | | | |

FORM I SV-TIC 1/87 Rev.

1B
SEMIVOLATILE ORGANICS ANALYSIS DATA SHEET

EPA SAMPLE NO.

EKH57

Lab Name: S-CUBED Contract: 68-D9-0027

Lab Code: S3 Case No.: 14906 SAS No.: SDG No.: EKH56

Matrix: (soil/water) SOIL Lab Sample ID: RRH57

Sample wt/vol: 30.0 (g/mL) G Lab File ID: RRH57

Level: (low/med) LOW Date Received: 09/19/90

% Moisture: not dec. 35 dec._____ Date Extracted: 09/25/90

Extraction: (SepF/Cont/Sonc) SONC Date Analyzed: 10/12/90

GPC Cleanup: (Y/N) Y pH: 8.0 Dilution Factor: 1.000

| CAS NO. | COMPOUND | CONCENTRATION UNITS: (ug/L or ug/Kg) UG/KG | Q |
|---|---|---|---|
| 108-95-2 | Phenol | 1000 | U |
| 111-44-4 | bis(2-Chloroethyl)ether | 1000 | U |
| 95-57-8 | 2-Chlorophenol | 1000 | U |
| 541-73-1 | 1,3-Dichlorobenzene | 1000 | U |
| 106-46-7 | 1,4-Dichlorobenzene | 1000 | U |
| 100-51-6 | Benzyl alcohol | 1000 | U |
| 95-50-1 | 1,2-Dichlorobenzene | 1000 | U |
| 95-48-7 | 2-Methylphenol | 1000 | U |
| 108-60-1 | bis(2-Chloroisopropyl)ether | 1000 | U |
| 106-44-5 | 4-Methylphenol | 1000 | U |
| 621-64-7 | N-Nitroso-di-n-propylamine | 1000 | U |
| 67-72-1 | Hexachloroethane | 1000 | U |
| 98-95-3 | Nitrobenzene | 1000 | U |
| 78-59-1 | Isophorone | 1000 | U |
| 88-75-5 | 2-Nitrophenol | 1000 | U |
| 105-67-9 | 2,4-Dimethylphenol | 1000 | U |
| 65-85-0 | Benzoic acid | 4900 | U |
| 111-91-1 | bis(2-Chloroethoxy)methane | 1000 | U |
| 120-83-2 | 2,4-Dichlorophenol | 1000 | U |
| 120-82-1 | 1,2,4-Trichlorobenzene | 1000 | U |
| 91-20-3 | Naphthalene | 1000 | U |
| 106-47-8 | 4-Chloroaniline | 1000 | U |
| 87-68-3 | Hexachlorobutadiene | 1000 | U |
| 59-50-7 | 4-Chloro-3-methylphenol | 1000 | U |
| 91-57-6 | 2-Methylnaphthalene | 1000 | U |
| 77-47-4 | Hexachlorocyclopentadiene | 1000 | U |
| 88-06-2 | 2,4,6-Trichlorophenol | 1000 | U |
| 95-95-4 | 2,4,5-Trichlorophenol | 4900 | U |
| 91-58-7 | 2-Chloronaphthalene | 1000 | U |
| 88-74-4 | 2-Nitroaniline | 4900 | U |
| 131-11-3 | Dimethylphthalate | 1000 | U |
| 208-96-8 | Acenaphthylene | 1000 | U |
| 606-20-2 | 2,6-Dinitrotoluene | 1000 | U |

1C
SEMIVOLATILE ORGANICS ANALYSIS DATA SHEET

EPA SAMPLE NO.

EKH57

Lab Name: S-CUBED Contract: 68-D9-0027

Lab Code: S3 Case No.: 14906 SAS No.: SDG No.: EKH56

Matrix: (soil/water) SOIL Lab Sample ID: RRH57

Sample wt/vol: 30.0 (g/mL) G Lab File ID: RRH57

Level: (low/med) LOW Date Received: 09/19/90

% Moisture: not dec. 35 dec._____ Date Extracted: 09/25/90

Extraction: (SepF/Cont/Sonc) SONC Date Analyzed: 10/12/90

GPC Cleanup: (Y/N) Y pH: 8.0 Dilution Factor: 1.000

| CAS NO. | COMPOUND | CONCENTRATION UNITS: (ug/L or ug/Kg) UG/KG | Q |
|---|---|---|---|
| 99-09-2 | 3-Nitroaniline | 4900 | U |
| 83-32-9 | Acenapthene | 1000 | U |
| 51-28-5 | 2,4-Dinitrophenol | 4900 | U |
| 100-02-7 | 4-Nitrophenol | 4900 | U |
| 132-64-9 | Dibenzofuran | 1000 | U |
| 121-14-2 | 2,4-Dinitrotoluene | 1000 | U |
| 84-66-2 | Diethylphthalate | 1000 | U |
| 7005-72-3 | 4-Chlorophenyl-phenylether | 1000 | U |
| 86-73-7 | Fluorene | 1000 | U |
| 100-01-6 | 4-Nitroaniline | 4900 | U |
| 534-52-1 | 4,6-Dinitro-2-methylphenol | 4900 | U |
| 86-30-6 | N-Nitrosodiphenylamine (1) | 1000 | U |
| 101-55-3 | 4-Bromophenyl-phenylether | 1000 | U |
| 118-74-1 | Hexachlorobenzene | 1000 | U |
| 87-86-5 | Pentachlorophenol | 4900 | U |
| 85-01-8 | Phenanthrene | 1000 | U |
| 120-12-7 | Anthracene | 1000 | U |
| 84-74-2 | Di-n-butylphthalate | 1000 | U |
| 206-44-0 | Fluoranthene | 1000 | U |
| 129-00-0 | Pyrene | 1000 | U |
| 85-68-7 | Butylbenzylphthalate | 1000 | U |
| 91-94-1 | 3,3'-Dichlorobenzidine | 2000 | U |
| 56-55-3 | Benzo(a)anthracene | 1000 | U |
| 218-01-9 | Chrysene | 1000 | U |
| 117-81-7 | bis(2-Ethylhexyl)phthalate | 650 | J |
| 117-84-0 | Di-n-octylphthalate | 1000 | U |
| 205-99-2 | Benzo(b)fluoranthene | 1000 | U |
| 207-08-9 | Benzo(k)fluoranthene | 1000 | U |
| 50-32-8 | Benzo(a)pyrene | 1000 | U |
| 193-39-5 | Indeno(1,2,3-cd)pyrene | 1000 | U |
| 53-70-3 | Dibenz(a,h)anthracene | 1000 | U |
| 191-24-2 | Benzo(g,h,i)perylene | 1000 | U |

(1) - Cannot be separated from Diphenylamine

1F
SEMIVOLATILE ORGANICS ANALYSIS DATA SHEET
TENTATIVELY IDENTIFIED COMPOUNDS

EPA SAMPLE NO.

EKH57

Lab Name: S-CUBED Contract: 68-D9-0027

Lab Code: S3 Case No.: 14906 SAS No.: SDG No.: EKH56

Matrix: (soil/water) SOIL Lab Sample ID: RRH57

Sample wt/vol: 30.0 (g/mL) G Lab File ID: RRH57

Level: (low/med) LOW Date Received: 09/19/90

% Moisture: not dec. 35 dec._____ Date Extracted: 09/25/90

Extraction: (SepF/Cont/Sonc) SONC Date Analyzed: 10/12/90

GPC Cleanup : (Y/N) Y pH: 8.0 Dilution Factor: 1.000

Number TICs found: 20

CONCENTRATION UNITS:
(ug/L or ug/Kg) UG/KG

| CAS NUMBER | COMPOUND NAME | RT | EST. CONC. | Q |
|---|---|---|---|---|
| 1. | UNKNOWN | 7.45 | 2600 | ~~J~~ BU 8/11/28/90 |
| 2.00100-52-7 | BENZALDEHYDE | 10.60 | 1500 | J |
| 3. | UNKNOWN HYDROCARBON | 17.88 | 540 | J |
| 4. | UNKNOWN HYDROCARBON | 19.67 | 560 | J |
| 5. | UNKNOWN HYDROCARBON | 20.73 | 430 | J |
| 6. | UNKNOWN HYDROCARBON | 21.34 | 550 | J |
| 7. | UNKNOWN HYDROCARBON | 22.94 | 440 | J |
| 8. | UNKNOWN | 24.44 | 690 | J |
| 9. | UNKNOWN HYDROCARBON | 24.54 | 1700 | J |
| 10. | UNKNOWN | 25.08 | 410 | J |
| 11. | UNKNOWN HYDROCARBON | 26.01 | 2000 | J |
| 12. | UNKNOWN | 27.13 | 1100 | J |
| 13. | UNKNOWN | 27.24 | 1100 | J |
| 14. | UNKNOWN | 28.52 | 1600 | J |
| 15. | UNKNOWN | 31.43 | 3000 | J |
| 16. | UNKNOWN | 32.34 | 2000 | J |
| 17. | UNKNOWN | 35.25 | 1600 | J |
| 18. | UNKNOWN | 35.81 | 2000 | J |
| 19. | UNKNOWN | 40.22 | 810 | J |
| 20. | UNKNOWN | 41.24 | 640 | J |
| 21. | | | | |
| 22. | | | | |
| 23. | | | | |
| 24. | | | | |
| 25. | | | | |
| 26. | | | | |
| 27. | | | | |
| 28. | | | | |
| 29. | | | | |
| 30. | | | | |

1B
SEMIVOLATILE ORGANICS ANALYSIS DATA SHEET

EPA SAMPLE NO.

EKH58

Lab Name: S-CUBED Contract: 68-D9-0027

Lab Code: S3 Case No.: 14906 SAS No.: SDG No.: EKH56

Matrix: (soil/water) SOIL Lab Sample ID: RXH58

Sample wt/vol: 30.0 (g/mL) G Lab File ID: RXH58

Level: (low/med) LOW Date Received: 09/19/90

% Moisture: not dec. 33 dec._____ Date Extracted: 10/11/90

Extraction: (SepF/Cont/Sonc) SONC Date Analyzed: 10/12/90

GPC Cleanup: (Y/N) Y pH: 7.6 Dilution Factor: 1.000

| CAS NO. | COMPOUND | CONCENTRATION UNITS: (ug/L or ug/Kg) UG/KG | Q |
|---|---|---|---|
| 108-95-2 | Phenol | 980 | U |
| 111-44-4 | bis(2-Chloroethyl)ether | 980 | U |
| 95-57-8 | 2-Chlorophenol | 980 | U |
| 541-73-1 | 1,3-Dichlorobenzene | 980 | U |
| 106-46-7 | 1,4-Dichlorobenzene | 980 | U |
| 100-51-6 | Benzyl alcohol | 980 | U |
| 95-50-1 | 1,2-Dichlorobenzene | 980 | U |
| 95-48-7 | 2-Methylphenol | 980 | U |
| 108-60-1 | bis(2-Chloroisopropyl)ether | 980 | U |
| 106-44-5 | 4-Methylphenol | 980 | U |
| 621-64-7 | N-Nitroso-di-n-propylamine | 980 | U |
| 67-72-1 | Hexachloroethane | 980 | U |
| 98-95-3 | Nitrobenzene | 980 | U |
| 78-59-1 | Isophorone | 980 | U |
| 88-75-5 | 2-Nitrophenol | 980 | U |
| 105-67-9 | 2,4-Dimethylphenol | 980 | U |
| 65-85-0 | Benzoic acid | 4700 | U |
| 111-91-1 | bis(2-Chloroethoxy)methane | 980 | U |
| 120-83-2 | 2,4-Dichlorophenol | 980 | U |
| 120-82-1 | 1,2,4-Trichlorobenzene | 980 | U |
| 91-20-3 | Naphthalene | 980 | U |
| 106-47-8 | 4-Chloroaniline | 980 | U |
| 87-68-3 | Hexachlorobutadiene | 980 | U |
| 59-50-7 | 4-Chloro-3-methylphenol | 980 | U |
| 91-57-6 | 2-Methylnaphthalene | 980 | U |
| 77-47-4 | Hexachlorocyclopentadiene | 980 | U |
| 88-06-2 | 2,4,6-Trichlorophenol | 980 | U |
| 95-95-4 | 2,4,5-Trichlorophenol | 4700 | U |
| 91-58-7 | 2-Chloronaphthalene | 980 | U |
| 88-74-4 | 2-Nitroaniline | 4700 | U |
| 131-11-3 | Dimethylphthalate | 980 | U |
| 208-96-8 | Acenaphthylene | 980 | U |
| 606-20-2 | 2,6-Dinitrotoluene | 980 | U |

1C
SEMIVOLATILE ORGANICS ANALYSIS DATA SHEET

EPA SAMPLE NO.

EKH58

Lab Name: S-CUBED Contract: 68-D9-0027

Lab Code: S3 Case No.: 14906 SAS No.: SDG No.: EKH56

Matrix: (soil/water) SOIL Lab Sample ID: RXH58

Sample wt/vol: 30.0 (g/mL) G Lab File ID: RXH58

Level: (low/med) LOW Date Received: 09/19/90

% Moisture: not dec. 33 dec._____ Date Extracted: 10/11/90

Extraction: (SepF/Cont/Sonc) SONC Date Analyzed: 10/12/90

GPC Cleanup: (Y/N) Y pH: 7.6 Dilution Factor: 1.000

| CAS NO. | COMPOUND | CONCENTRATION UNITS: (ug/L or ug/Kg) UG/KG | Q |
|---|---|---|---|
| 99-09-2 | 3-Nitroaniline | 4700 | U |
| 83-32-9 | Acenapthene | 980 | U |
| 51-28-5 | 2,4-Dinitrophenol | 4700 | U |
| 100-02-7 | 4-Nitrophenol | 4700 | U |
| 132-64-9 | Dibenzofuran | 980 | U |
| 121-14-2 | 2,4-Dinitrotoluene | 980 | U |
| 84-66-2 | Diethylphthalate | 980 | U |
| 7005-72-3 | 4-Chlorophenyl-phenylether | 980 | U |
| 86-73-7 | Fluorene | 980 | U |
| 100-01-6 | 4-Nitroaniline | 4700 | U |
| 534-52-1 | 4,6-Dinitro-2-methylphenol | 4700 | U |
| 86-30-6 | N-Nitrosodiphenylamine (1) | 980 | U |
| 101-55-3 | 4-Bromophenyl-phenylether | 980 | U |
| 118-74-1 | Hexachlorobenzene | 980 | U |
| 87-86-5 | Pentachlorophenol | 4700 | U |
| 85-01-8 | Phenanthrene | 980 | U |
| 120-12-7 | Anthracene | 980 | U |
| 84-74-2 | Di-n-butylphthalate | 980 | U |
| 206-44-0 | Fluoranthene | 980 | U |
| 129-00-0 | Pyrene | 980 | U |
| 85-68-7 | Butylbenzylphthalate | 980 | U |
| 91-94-1 | 3,3'-Dichlorobenzidine | 2000 | U |
| 56-55-3 | Benzo(a)anthracene | 980 | U |
| 218-01-9 | Chrysene | 980 | U |
| 117-81-7 | bis(2-Ethylhexyl)phthalate | 870 | J |
| 117-84-0 | Di-n-octylphthalate | 980 | U |
| 205-99-2 | Benzo(b)fluoranthene | 980 | U |
| 207-08-9 | Benzo(k)fluoranthene | 980 | U |
| 50-32-8 | Benzo(a)pyrene | 980 | U |
| 193-39-5 | Indeno(1,2,3-cd)pyrene | 980 | U |
| 53-70-3 | Dibenz(a,h)anthracene | 980 | U |
| 191-24-2 | Benzo(g,h,i)perylene | 980 | U |

(1) - Cannot be separated from Diphenylamine

1F
SEMIVOLATILE ORGANICS ANALYSIS DATA SHEET
TENTATIVELY IDENTIFIED COMPOUNDS

EPA SAMPLE NO.

EKH58

Lab Name: S-CUBED Contract: 68-D9-0027

Lab Code: S3 Case No.: 14906 SAS No.: SDG No.: EKH56

Matrix: (soil/water) SOIL Lab Sample ID: RXH58

Sample wt/vol: 30.0 (g/mL) G Lab File ID: RXH58

Level: (low/med) LOW Date Received: 09/19/90

% Moisture: not dec. 33 dec._____ Date Extracted: 10/11/90

Extraction: (SepF/Cont/Sonc) SONC Date Analyzed: 10/12/90

GPC Cleanup : (Y/N) Y pH: 7.6 Dilution Factor: 1.000

Number TICs found: 20

CONCENTRATION UNITS:
(ug/L or ug/Kg) UG/KG

| CAS NUMBER | COMPOUND NAME | RT | EST. CONC. | Q |
|---|---|---|---|---|
| 1. | UNKNOWN | 7.45 | 590 | ~~J~~ B ug 11/5/90 |
| 2. | UNKNOWN | 7.72 | 13000 | J |
| 3. | UNKNOWN HYDROCARBON | 15.98 | 400 | J |
| 4. | UNKNOWN HYDROCARBON | 17.89 | 970 | J |
| 5. | UNKNOWN HYDROCARBON | 19.67 | 1100 | J |
| 6. | UNKNOWN HYDROCARBON | 20.73 | 880 | J |
| 7. | UNKNOWN HYDROCARBON | 21.35 | 1200 | J |
| 8. | UNKNOWN HYDROCARBON | 22.93 | 810 | J |
| 9. | UNKNOWN HYDROCARBON | 24.43 | 530 | J |
| 10. | UNKNOWN HYDROCARBON | 24.52 | 990 | J |
| 11. | UNKNOWN HYDROCARBON | 25.98 | 570 | J |
| 12. | UNKNOWN | 27.12 | 360 | J |
| 13. | UNKNOWN HYDROCARBON | 27.20 | 520 | J |
| 14. | UNKNOWN HYDROCARBON | 28.49 | 620 | J |
| 15. | UNKNOWN HYDROCARBON | 29.74 | 700 | J |
| 16. | UNKNOWN | 30.14 | 330 | J |
| 17. | UNKNOWN | 31.17 | 460 | J |
| 18. | UNKNOWN | 31.34 | 980 | J |
| 19. | UNKNOWN | 40.23 | 940 | J |
| 20. | UNKNOWN | 41.25 | 820 | J |
| 21. | | | | |
| 22. | | | | |
| 23. | | | | |
| 24. | | | | |
| 25. | | | | |
| 26. | | | | |
| 27. | | | | |
| 28. | | | | |
| 29. | | | | |
| 30. | | | | |

FORM I SV-TIC 1/87 Rev.

1B
SEMIVOLATILE ORGANICS ANALYSIS DATA SHEET

EPA SAMPLE NO.

EKH59

Lab Name: S-CUBED Contract: 68-D9-0027

Lab Code: S3 Case No.: 14906 SAS No.: SDG No.: EKH56

Matrix: (soil/water) SOIL Lab Sample ID: EKH59

Sample wt/vol: 30.0 (g/mL) G Lab File ID: EKH59

Level: (low/med) LOW Date Received: 09/19/90

% Moisture: not dec. 74 dec._____ Date Extracted: 09/25/90

Extraction: (SepF/Cont/Sonc) SONC Date Analyzed: 10/10/90

GPC Cleanup: (Y/N) Y pH: 7.7 Dilution Factor: 1.000

| CAS NO. | COMPOUND | CONCENTRATION UNITS: (ug/L or ug/Kg) UG/KG | Q |
|---|---|---|---|
| 108-95-2 | Phenol | 2600 | U |
| 111-44-4 | bis(2-Chloroethyl)ether | 2600 | U |
| 95-57-8 | 2-Chlorophenol | 2600 | U |
| 541-73-1 | 1,3-Dichlorobenzene | 2600 | U |
| 106-46-7 | 1,4-Dichlorobenzene | 2600 | U |
| 100-51-6 | Benzyl alcohol | 2600 | U |
| 95-50-1 | 1,2-Dichlorobenzene | 2600 | U |
| 95-48-7 | 2-Methylphenol | 2600 | U |
| 108-60-1 | bis(2-Chloroisopropyl)ether | 2600 | U |
| 106-44-5 | 4-Methylphenol | 2600 | U |
| 621-64-7 | N-Nitroso-di-n-propylamine | 2600 | U |
| 67-72-1 | Hexachloroethane | 2600 | U |
| 98-95-3 | Nitrobenzene | 2600 | U |
| 78-59-1 | Isophorone | 2600 | U |
| 88-75-5 | 2-Nitrophenol | 2600 | U |
| 105-67-9 | 2,4-Dimethylphenol | 2600 | U |
| 65-85-0 | Benzoic acid | 12000 | U |
| 111-91-1 | bis(2-Chloroethoxy)methane | 2600 | U |
| 120-83-2 | 2,4-Dichlorophenol | 2600 | U |
| 120-82-1 | 1,2,4-Trichlorobenzene | 2600 | U |
| 91-20-3 | Naphthalene | 2600 | U |
| 106-47-8 | 4-Chloroaniline | 2600 | U |
| 87-68-3 | Hexachlorobutadiene | 2600 | U |
| 59-50-7 | 4-Chloro-3-methylphenol | 2600 | U |
| 91-57-6 | 2-Methylnaphthalene | 2600 | U |
| 77-47-4 | Hexachlorocyclopentadiene | 2600 | U |
| 88-06-2 | 2,4,6-Trichlorophenol | 2600 | U |
| 95-95-4 | 2,4,5-Trichlorophenol | 12000 | U |
| 91-58-7 | 2-Chloronaphthalene | 2600 | U |
| 88-74-4 | 2-Nitroaniline | 12000 | U |
| 131-11-3 | Dimethylphthalate | 2600 | U |
| 208-96-8 | Acenaphthylene | 2600 | U |
| 606-20-2 | 2,6-Dinitrotoluene | 2600 | U |

1C
SEMIVOLATILE ORGANICS ANALYSIS DATA SHEET

EPA SAMPLE NO.

EKH59

Lab Name: S-CUBED Contract: 68-D9-0027

Lab Code: S3 Case No.: 14906 SAS No.: SDG No.: EKH56

Matrix: (soil/water) SOIL Lab Sample ID: EKH59

Sample wt/vol: 30.0 (g/mL) G Lab File ID: EKH59

Level: (low/med) LOW Date Received: 09/19/90

% Moisture: not dec. 74 dec._____ Date Extracted: 09/25/90

Extraction: (SepF/Cont/Sonc) SONC Date Analyzed: 10/10/90

GPC Cleanup: (Y/N) Y pH: 7.7 Dilution Factor: 1.000

| CAS NO. | COMPOUND | CONCENTRATION UNITS: (ug/L or ug/Kg) UG/KG | Q |
|---|---|---|---|
| 99-09-2 | 3-Nitroaniline | 12000 | U |
| 83-32-9 | Acenapthene | 2600 | U |
| 51-28-5 | 2,4-Dinitrophenol | 12000 | U |
| 100-02-7 | 4-Nitrophenol | 12000 | U |
| 132-64-9 | Dibenzofuran | 2600 | U |
| 121-14-2 | 2,4-Dinitrotoluene | 2600 | U |
| 84-66-2 | Diethylphthalate | 2600 | U |
| 7005-72-3 | 4-Chlorophenyl-phenylether | 2600 | U |
| 86-73-7 | Fluorene | 2600 | U |
| 100-01-6 | 4-Nitroaniline | 12000 | U |
| 534-52-1 | 4,6-Dinitro-2-methylphenol | 12000 | U |
| 86-30-6 | N-Nitrosodiphenylamine (1) | 2600 | U |
| 101-55-3 | 4-Bromophenyl-phenylether | 2600 | U |
| 118-74-1 | Hexachlorobenzene | 2600 | U |
| 87-86-5 | Pentachlorophenol | 12000 | U |
| 85-01-8 | Phenanthrene | 2600 | U |
| 120-12-7 | Anthracene | 2600 | U |
| 84-74-2 | Di-n-butylphthalate | 2600 | U |
| 206-44-0 | Fluoranthene | 2600 | U |
| 129-00-0 | Pyrene | 2600 | U |
| 85-68-7 | Butylbenzylphthalate | 2600 | U |
| 91-94-1 | 3,3'-Dichlorobenzidine | 5100 | U |
| 56-55-3 | Benzo(a)anthracene | 2600 | U |
| 218-01-9 | Chrysene | 2600 | U |
| 117-81-7 | bis(2-Ethylhexyl)phthalate | 3500 | |
| 117-84-0 | Di-n-octylphthalate | 2600 | U |
| 205-99-2 | Benzo(b)fluoranthene | 2600 | U |
| 207-08-9 | Benzo(k)fluoranthene | 2600 | U |
| 50-32-8 | Benzo(a)pyrene | 2600 | U |
| 193-39-5 | Indeno(1,2,3-cd)pyrene | 2600 | U |
| 53-70-3 | Dibenz(a,h)anthracene | 2600 | U |
| 191-24-2 | Benzo(g,h,i)perylene | 2600 | U |

(1) - Cannot be separated from Diphenylamine

1F
SEMIVOLATILE ORGANICS ANALYSIS DATA SHEET
TENTATIVELY IDENTIFIED COMPOUNDS

EPA SAMPLE NO.

EKH59

Lab Name: S-CUBED Contract: 68-D9-0027

Lab Code: S3 Case No.: 14906 SAS No.: SDG No.: EKH56

Matrix: (soil/water) SOIL Lab Sample ID: EKH59

Sample wt/vol: 30.0 (g/mL) G Lab File ID: EKH59

Level: (low/med) LOW Date Received: 09/19/90

% Moisture: not dec. 74 dec._____ Date Extracted: 09/25/90

Extraction: (SepF/Cont/Sonc) SONC Date Analyzed: 10/10/90

GPC Cleanup : (Y/N) Y pH: 7.7 Dilution Factor: 1.000

Number TICs found: 20

CONCENTRATION UNITS:
(ug/L or ug/Kg) UG/KG

| CAS NUMBER | COMPOUND NAME | RT | EST. CONC. | Q |
|---|---|---|---|---|
| 1. | UNKNOWN | 7.54 | 8300 | ~~JB~~ U 11/28/90 |
| 2. 00100-52-7 | BENZALDEHYDE | 10.65 | 3600 | J |
| 3. | UNKNOWN HYDROCARBON | 19.71 | 2200 | J |
| 4. | UNKNOWN HYDROCARBON | 20.77 | 2500 | J |
| 5. | UNKNOWN HYDROCARBON | 21.38 | 3700 | J |
| 6. | UNKNOWN HYDROCARBON | 22.98 | 4700 | J |
| 7. | UNKNOWN HYDROCARBON | 24.48 | 3300 | J |
| 8. | UNKNOWN HYDROCARBON | 24.58 | 3000 | J |
| 9. | UNKNOWN HYDROCARBON | 26.04 | 2500 | J |
| 10. | UNKNOWN | 27.16 | 1300 | J |
| 11. | UNKNOWN HYDROCARBON | 27.26 | 3200 | J |
| 12. | UNKNOWN HYDROCARBON | 28.57 | 3500 | J |
| 13. | UNKNOWN HYDROCARBON | 29.80 | 4500 | J |
| 14. | UNKNOWN | 30.21 | 2300 | J |
| 15. | UNKNOWN | 30.98 | 6700 | J |
| 16. | UNKNOWN | 31.40 | 5900 | J |
| 17. | UNKNOWN HYDROCARBON | 32.12 | 7300 | J |
| 18. | UNKNOWN | 33.20 | 5400 | J |
| 19. | UNKNOWN | 40.29 | 4600 | J |
| 20. | UNKNOWN | 41.33 | 3900 | J |
| 21. | | | | |
| 22. | | | | |
| 23. | | | | |
| 24. | | | | |
| 25. | | | | |
| 26. | | | | |
| 27. | | | | |
| 28. | | | | |
| 29. | | | | |
| 30. | | | | |

FORM I SV-TIC 1/87 Rev.

1B
SEMIVOLATILE ORGANICS ANALYSIS DATA SHEET

EPA SAMPLE NO.

EKH60

Lab Name: S-CUBED Contract: 68-D9-0027

Lab Code: S3 Case No.: 14906 SAS No.: SDG No.: EKH56

Matrix: (soil/water) SOIL Lab Sample ID: EKH60

Sample wt/vol: 30.0 (g/mL) G Lab File ID: EKH60

Level: (low/med) LOW Date Received: 09/19/90

% Moisture: not dec. 16 dec._____ Date Extracted: 09/25/90

Extraction: (SepF/Cont/Sonc) SONC Date Analyzed: 10/10/90

GPC Cleanup: (Y/N) Y pH: 8.4 Dilution Factor: 1.000

| CAS NO. | COMPOUND | CONCENTRATION UNITS: (ug/L or ug/Kg) UG/KG | Q |
|---|---|---|---|
| 108-95-2 | Phenol | 780 | U |
| 111-44-4 | bis(2-Chloroethyl)ether | 780 | U |
| 95-57-8 | 2-Chlorophenol | 780 | U |
| 541-73-1 | 1,3-Dichlorobenzene | 780 | U |
| 106-46-7 | 1,4-Dichlorobenzene | 780 | U |
| 100-51-6 | Benzyl alcohol | 780 | U |
| 95-50-1 | 1,2-Dichlorobenzene | 780 | U |
| 95-48-7 | 2-Methylphenol | 780 | U |
| 108-60-1 | bis(2-Chloroisopropyl)ether | 780 | U |
| 106-44-5 | 4-Methylphenol | 780 | U |
| 621-64-7 | N-Nitroso-di-n-propylamine | 780 | U |
| 67-72-1 | Hexachloroethane | 780 | U |
| 98-95-3 | Nitrobenzene | 780 | U |
| 78-59-1 | Isophorone | 780 | U |
| 88-75-5 | 2-Nitrophenol | 780 | U |
| 105-67-9 | 2,4-Dimethylphenol | 780 | U |
| 65-85-0 | Benzoic acid | 3800 | U |
| 111-91-1 | bis(2-Chloroethoxy)methane | 780 | U |
| 120-83-2 | 2,4-Dichlorophenol | 780 | U |
| 120-82-1 | 1,2,4-Trichlorobenzene | 780 | U |
| 91-20-3 | Naphthalene | 780 | U |
| 106-47-8 | 4-Chloroaniline | 780 | U |
| 87-68-3 | Hexachlorobutadiene | 780 | U |
| 59-50-7 | 4-Chloro-3-methylphenol | 780 | U |
| 91-57-6 | 2-Methylnaphthalene | 780 | U |
| 77-47-4 | Hexachlorocyclopentadiene | 780 | U |
| 88-06-2 | 2,4,6-Trichlorophenol | 780 | U |
| 95-95-4 | 2,4,5-Trichlorophenol | 3800 | U |
| 91-58-7 | 2-Chloronaphthalene | 780 | U |
| 88-74-4 | 2-Nitroaniline | 3800 | U |
| 131-11-3 | Dimethylphthalate | 780 | U |
| 208-96-8 | Acenaphthylene | 780 | U |
| 606-20-2 | 2,6-Dinitrotoluene | 780 | U |

1C
SEMIVOLATILE ORGANICS ANALYSIS DATA SHEET

EPA SAMPLE NO.

EKH60

Lab Name: S-CUBED Contract: 68-D9-0027

Lab Code: S3 Case No.: 14906 SAS No.: SDG No.: EKH56

Matrix: (soil/water) SOIL Lab Sample ID: EKH60

Sample wt/vol: 30.0 (g/mL) G Lab File ID: EKH60

Level: (low/med) LOW Date Received: 09/19/90

% Moisture: not dec. 16 dec._____ Date Extracted: 09/25/90

Extraction: (SepF/Cont/Sonc) SONC Date Analyzed: 10/10/90

GPC Cleanup: (Y/N) Y pH: 8.4 Dilution Factor: 1.000

| CAS NO. | COMPOUND | CONCENTRATION UNITS: (ug/L or ug/Kg) UG/KG | Q |
|---|---|---|---|
| 99-09-2 | 3-Nitroaniline | 3800 | U |
| 83-32-9 | Acenapthene | 780 | U |
| 51-28-5 | 2,4-Dinitrophenol | 3800 | U |
| 100-02-7 | 4-Nitrophenol | 3800 | U |
| 132-64-9 | Dibenzofuran | 780 | U |
| 121-14-2 | 2,4-Dinitrotoluene | 780 | U |
| 84-66-2 | Diethylphthalate | 780 | U |
| 7005-72-3 | 4-Chlorophenyl-phenylether | 780 | U |
| 86-73-7 | Fluorene | 780 | U |
| 100-01-6 | 4-Nitroaniline | 3800 | U |
| 534-52-1 | 4,6-Dinitro-2-methylphenol | 3800 | U |
| 86-30-6 | N-Nitrosodiphenylamine (1) | 780 | U |
| 101-55-3 | 4-Bromophenyl-phenylether | 780 | U |
| 118-74-1 | Hexachlorobenzene | 780 | U |
| 87-86-5 | Pentachlorophenol | 3800 | U |
| 85-01-8 | Phenanthrene | 220 | J |
| 120-12-7 | Anthracene | 780 | U |
| 84-74-2 | Di-n-butylphthalate | 780 | U |
| 206-44-0 | Fluoranthene | 190 | J |
| 129-00-0 | Pyrene | 130 | J |
| 85-68-7 | Butylbenzylphthalate | 780 | U |
| 91-94-1 | 3,3'-Dichlorobenzidine | 1600 | U |
| 56-55-3 | Benzo(a)anthracene | 780 | U |
| 218-01-9 | Chrysene | 780 | U |
| 117-81-7 | bis(2-Ethylhexyl)phthalate | 240 | J |
| 117-84-0 | Di-n-octylphthalate | 780 | U |
| 205-99-2 | Benzo(b)fluoranthene | 780 | U |
| 207-08-9 | Benzo(k)fluoranthene | 780 | U |
| 50-32-8 | Benzo(a)pyrene | 780 | U |
| 193-39-5 | Indeno(1,2,3-cd)pyrene | 780 | U |
| 53-70-3 | Dibenz(a,h)anthracene | 780 | U |
| 191-24-2 | Benzo(g,h,i)perylene | 780 | U |

(1) - Cannot be separated from Diphenylamine

1F
SEMIVOLATILE ORGANICS ANALYSIS DATA SHEET
TENTATIVELY IDENTIFIED COMPOUNDS

EPA SAMPLE NO.

EKH60

Lab Name: S-CUBED Contract: 68-D9-0027

Lab Code: S3 Case No.: 14906 SAS No.: SDG No.: EKH56

Matrix: (soil/water) SOIL Lab Sample ID: EKH60

Sample wt/vol: 30.0 (g/mL) G Lab File ID: EKH60

Level: (low/med) LOW Date Received: 09/19/90

% Moisture: not dec. 16 dec._____ Date Extracted: 09/25/90

Extraction: (SepF/Cont/Sonc) SONC Date Analyzed: 10/10/90

GPC Cleanup : (Y/N) Y pH: 8.4 Dilution Factor: 1.000

Number TICs found: 12

CONCENTRATION UNITS:
(ug/L or ug/Kg) UG/KG

| CAS NUMBER | COMPOUND NAME | RT | EST. CONC. | Q |
|---|---|---|---|---|
| 1. | UNKNOWN | 7.57 | 3000 | ~~JB~~ U 11/28/90 |
| 2.00100-52-7 | BENZALDEHYDE | 10.65 | 750 | J |
| 3. | UNKNOWN HYDROCARBON | 19.71 | 290 | J |
| 4. | UNKNOWN HYDROCARBON | 21.38 | 440 | J |
| 5. | UNKNOWN HYDROCARBON | 22.98 | 450 | J |
| 6. | UNKNOWN HYDROCARBON | 24.48 | 400 | J |
| 7. | UNKNOWN HYDROCARBON | 24.55 | 430 | J |
| 8. | UNKNOWN HYDROCARBON | 27.25 | 290 | J |
| 9. | UNKNOWN HYDROCARBON | 32.06 | 310 | J |
| 10. | UNKNOWN | 37.08 | 530 | J |
| 11. | UNKNOWN HYDROCARBON | 37.97 | 640 | J |
| 12. | UNKNOWN HYDROCARBON | 39.97 | 370 | J |
| 13. | | | | |
| 14. | | | | |
| 15. | | | | |
| 16. | | | | |
| 17. | | | | |
| 18. | | | | |
| 19. | | | | |
| 20. | | | | |
| 21. | | | | |
| 22. | | | | |
| 23. | | | | |
| 24. | | | | |
| 25. | | | | |
| 26. | | | | |
| 27. | | | | |
| 28. | | | | |
| 29. | | | | |
| 30. | | | | |

FORM I SV-TIC 1/87 Rev.

1B
SEMIVOLATILE ORGANICS ANALYSIS DATA SHEET

EPA SAMPLE NO.

EKH61

Lab Name: S-CUBED Contract: 68-D9-0027

Lab Code: S3 Case No.: 14906 SAS No.: SDG No.: EKH56

Matrix: (soil/water) SOIL Lab Sample ID: RRH61

Sample wt/vol: 30.0 (g/mL) G Lab File ID: RRH61

Level: (low/med) LOW Date Received: 09/19/90

% Moisture: not dec. 15 dec._____ Date Extracted: 09/25/90

Extraction: (SepF/Cont/Sonc) SONC Date Analyzed: 10/12/90

GPC Cleanup: (Y/N) Y pH: 8.4 Dilution Factor: 1.000

| CAS NO. | COMPOUND | CONCENTRATION UNITS: (ug/L or ug/Kg) UG/KG | Q |
|---|---|---|---|
| 108-95-2 | Phenol | 770 | U |
| 111-44-4 | bis(2-Chloroethyl)ether | 770 | U |
| 95-57-8 | 2-Chlorophenol | 770 | U |
| 541-73-1 | 1,3-Dichlorobenzene | 770 | U |
| 106-46-7 | 1,4-Dichlorobenzene | 770 | U |
| 100-51-6 | Benzyl alcohol | 770 | U |
| 95-50-1 | 1,2-Dichlorobenzene | 770 | U |
| 95-48-7 | 2-Methylphenol | 770 | U |
| 108-60-1 | bis(2-Chloroisopropyl)ether | 770 | U |
| 106-44-5 | 4-Methylphenol | 770 | U |
| 621-64-7 | N-Nitroso-di-n-propylamine | 770 | U |
| 67-72-1 | Hexachloroethane | 770 | U |
| 98-95-3 | Nitrobenzene | 770 | U |
| 78-59-1 | Isophorone | 770 | U |
| 88-75-5 | 2-Nitrophenol | 770 | U |
| 105-67-9 | 2,4-Dimethylphenol | 770 | U |
| 65-85-0 | Benzoic acid | 3700 | U |
| 111-91-1 | bis(2-Chloroethoxy)methane | 770 | U |
| 120-83-2 | 2,4-Dichlorophenol | 770 | U |
| 120-82-1 | 1,2,4-Trichlorobenzene | 770 | U |
| 91-20-3 | Naphthalene | 770 | U |
| 106-47-8 | 4-Chloroaniline | 770 | U |
| 87-68-3 | Hexachlorobutadiene | 770 | U |
| 59-50-7 | 4-Chloro-3-methylphenol | 770 | U |
| 91-57-6 | 2-Methylnaphthalene | 770 | U |
| 77-47-4 | Hexachlorocyclopentadiene | 770 | U |
| 88-06-2 | 2,4,6-Trichlorophenol | 770 | U |
| 95-95-4 | 2,4,5-Trichlorophenol | 3700 | U |
| 91-58-7 | 2-Chloronaphthalene | 770 | U |
| 88-74-4 | 2-Nitroaniline | 3700 | U |
| 131-11-3 | Dimethylphthalate | 770 | U |
| 208-96-8 | Acenaphthylene | 770 | U |
| 606-20-2 | 2,6-Dinitrotoluene | 770 | U |

1C
SEMIVOLATILE ORGANICS ANALYSIS DATA SHEET

EPA SAMPLE NO.

EKH61

Lab Name: S-CUBED Contract: 68-D9-0027

Lab Code: S3 Case No.: 14906 SAS No.: SDG No.: EKH56

Matrix: (soil/water) SOIL Lab Sample ID: RRH61

Sample wt/vol: 30.0 (g/mL) G Lab File ID: RRH61

Level: (low/med) LOW Date Received: 09/19/90

% Moisture: not dec. 15 dec._____ Date Extracted: 09/25/90

Extraction: (SepF/Cont/Sonc) SONC Date Analyzed: 10/12/90

GPC Cleanup: (Y/N) Y pH: 8.4 Dilution Factor: 1.000

| CAS NO. | COMPOUND | CONCENTRATION UNITS: (ug/L or ug/Kg) UG/KG | Q |
|---|---|---|---|
| 99-09-2 | 3-Nitroaniline | 3700 | U |
| 83-32-9 | Acenapthene | 770 | U |
| 51-28-5 | 2,4-Dinitrophenol | 3700 | U |
| 100-02-7 | 4-Nitrophenol | 3700 | U |
| 132-64-9 | Dibenzofuran | 770 | U |
| 121-14-2 | 2,4-Dinitrotoluene | 770 | U |
| 84-66-2 | Diethylphthalate | 770 | U |
| 7005-72-3 | 4-Chlorophenyl-phenylether | 770 | U |
| 86-73-7 | Fluorene | 770 | U |
| 100-01-6 | 4-Nitroaniline | 3700 | U |
| 534-52-1 | 4,6-Dinitro-2-methylphenol | 3700 | U |
| 86-30-6 | N-Nitrosodiphenylamine (1) | 770 | U |
| 101-55-3 | 4-Bromophenyl-phenylether | 770 | U |
| 118-74-1 | Hexachlorobenzene | 770 | U |
| 87-86-5 | Pentachlorophenol | 3700 | U |
| 85-01-8 | Phenanthrene | 770 | U |
| 120-12-7 | Anthracene | 770 | U |
| 84-74-2 | Di-n-butylphthalate | 770 | U |
| 206-44-0 | Fluoranthene | 770 | U |
| 129-00-0 | Pyrene | 770 | U |
| 85-68-7 | Butylbenzylphthalate | 770 | U |
| 91-94-1 | 3,3'-Dichlorobenzidine | 1500 | U |
| 56-55-3 | Benzo(a)anthracene | 770 | U |
| 218-01-9 | Chrysene | 770 | U |
| 117-81-7 | bis(2-Ethylhexyl)phthalate | 770 | U |
| 117-84-0 | Di-n-octylphthalate | 770 | U |
| 205-99-2 | Benzo(b)fluoranthene | 770 | U |
| 207-08-9 | Benzo(k)fluoranthene | 770 | U |
| 50-32-8 | Benzo(a)pyrene | 770 | U |
| 193-39-5 | Indeno(1,2,3-cd)pyrene | 770 | U |
| 53-70-3 | Dibenz(a,h)anthracene | 770 | U |
| 191-24-2 | Benzo(g,h,i)perylene | 770 | U |

(1) - Cannot be separated from Diphenylamine

1F

# SEMIVOLATILE ORGANICS ANALYSIS DATA SHEET
## TENTATIVELY IDENTIFIED COMPOUNDS

EPA SAMPLE NO.

EKH61

Lab Name: S-CUBED Contract: 68-D9-0027

Lab Code: S3 Case No.: 14906 SAS No.: SDG No.: EKH56

Matrix: (soil/water) SOIL Lab Sample ID: RRH61

Sample wt/vol: 30.0 (g/mL) G Lab File ID: RRH61

Level: (low/med) LOW Date Received: 09/19/90

% Moisture: not dec. 15 dec._____ Date Extracted: 09/25/90

Extraction: (SepF/Cont/Sonc) SONC Date Analyzed: 10/12/90

GPC Cleanup : (Y/N) Y pH: 8.4 Dilution Factor: 1.000

Number TICs found: 4

CONCENTRATION UNITS:
(ug/L or ug/Kg) UG/KG

| CAS NUMBER | COMPOUND NAME | RT | EST. CONC. | Q |
|---|---|---|---|---|
| 1. | UNKNOWN | 7.46 | 3200 | ~~J~~ U 11/28/90 |
| 2. 00100-52-7 | BENZALDEHYDE | 10.59 | 820 | J |
| 3. | UNKNOWN | 30.71 | 450 | J |
| 4. | UNKNOWN | 32.94 | 340 | J |
| 5. | | | | |
| 6. | | | | |
| 7. | | | | |
| 8. | | | | |
| 9. | | | | |
| 10. | | | | |
| 11. | | | | |
| 12. | | | | |
| 13. | | | | |
| 14. | | | | |
| 15. | | | | |
| 16. | | | | |
| 17. | | | | |
| 18. | | | | |
| 19. | | | | |
| 20. | | | | |
| 21. | | | | |
| 22. | | | | |
| 23. | | | | |
| 24. | | | | |
| 25. | | | | |
| 26. | | | | |
| 27. | | | | |
| 28. | | | | |
| 29. | | | | |
| 30. | | | | |

FORM I SV-TIC 1/87 Rev.

1B
SEMIVOLATILE ORGANICS ANALYSIS DATA SHEET

EPA SAMPLE NO.

EKH62

Lab Name: S-CUBED Contract: 68-D9-0027

Lab Code: S3 Case No.: 14906 SAS No.: SDG No.: EKH56

Matrix: (soil/water) SOIL Lab Sample ID: EKH62

Sample wt/vol: 30.0 (g/mL) G Lab File ID: EKH62

Level: (low/med) LOW Date Received: 09/19/90

% Moisture: not dec. 23 dec._____ Date Extracted: 09/25/90

Extraction: (SepF/Cont/Sonc) SONC Date Analyzed: 10/11/90

GPC Cleanup: (Y/N) Y pH: 5.9 Dilution Factor: 1.000

| CAS NO. | COMPOUND | CONCENTRATION UNITS: (ug/L or ug/Kg) UG/KG | Q |
|---|---|---|---|
| 108-95-2 | Phenol | 860 | U |
| 111-44-4 | bis(2-Chloroethyl)ether | 860 | U |
| 95-57-8 | 2-Chlorophenol | 860 | U |
| 541-73-1 | 1,3-Dichlorobenzene | 860 | U |
| 106-46-7 | 1,4-Dichlorobenzene | 860 | U |
| 100-51-6 | Benzyl alcohol | 860 | U |
| 95-50-1 | 1,2-Dichlorobenzene | 860 | U |
| 95-48-7 | 2-Methylphenol | 860 | U |
| 108-60-1 | bis(2-Chloroisopropyl)ether | 860 | U |
| 106-44-5 | 4-Methylphenol | 860 | U |
| 621-64-7 | N-Nitroso-di-n-propylamine | 860 | U |
| 67-72-1 | Hexachloroethane | 860 | U |
| 98-95-3 | Nitrobenzene | 860 | U |
| 78-59-1 | Isophorone | 860 | U |
| 88-75-5 | 2-Nitrophenol | 860 | U |
| 105-67-9 | 2,4-Dimethylphenol | 860 | U |
| 65-85-0 | Benzoic acid | 4200 | U |
| 111-91-1 | bis(2-Chloroethoxy)methane | 860 | U |
| 120-83-2 | 2,4-Dichlorophenol | 860 | U |
| 120-82-1 | 1,2,4-Trichlorobenzene | 860 | U |
| 91-20-3 | Naphthalene | 860 | U |
| 106-47-8 | 4-Chloroaniline | 860 | U |
| 87-68-3 | Hexachlorobutadiene | 860 | U |
| 59-50-7 | 4-Chloro-3-methylphenol | 860 | U |
| 91-57-6 | 2-Methylnaphthalene | 860 | U |
| 77-47-4 | Hexachlorocyclopentadiene | 860 | U |
| 88-06-2 | 2,4,6-Trichlorophenol | 860 | U |
| 95-95-4 | 2,4,5-Trichlorophenol | 4200 | U |
| 91-58-7 | 2-Chloronaphthalene | 860 | U |
| 88-74-4 | 2-Nitroaniline | 4200 | U |
| 131-11-3 | Dimethylphthalate | 860 | U |
| 208-96-8 | Acenaphthylene | 860 | U |
| 606-20-2 | 2,6-Dinitrotoluene | 860 | U |

1C

SEMIVOLATILE ORGANICS ANALYSIS DATA SHEET

EPA SAMPLE NO.

EKH62

Lab Name: S-CUBED Contract: 68-D9-0027

Lab Code: S3 Case No.: 14906 SAS No.: SDG No.: EKH56

Matrix: (soil/water) SOIL Lab Sample ID: EKH62

Sample wt/vol: 30.0 (g/mL) G Lab File ID: EKH62

Level: (low/med) LOW Date Received: 09/19/90

% Moisture: not dec. 23 dec._____ Date Extracted: 09/25/90

Extraction: (SepF/Cont/Sonc) SONC Date Analyzed: 10/11/90

GPC Cleanup: (Y/N) Y pH: 5.9 Dilution Factor: 1.000

| CAS NO. | COMPOUND | CONCENTRATION UNITS: (ug/L or ug/Kg) UG/KG | Q |
|---|---|---|---|
| 99-09-2 | 3-Nitroaniline | 4200 | U |
| 83-32-9 | Acenapthene | 860 | U |
| 51-28-5 | 2,4-Dinitrophenol | 4200 | U |
| 100-02-7 | 4-Nitrophenol | 4200 | U |
| 132-64-9 | Dibenzofuran | 860 | U |
| 121-14-2 | 2,4-Dinitrotoluene | 860 | U |
| 84-66-2 | Diethylphthalate | 860 | U |
| 7005-72-3 | 4-Chlorophenyl-phenylether | 860 | U |
| 86-73-7 | Fluorene | 860 | U |
| 100-01-6 | 4-Nitroaniline | 4200 | U |
| 534-52-1 | 4,6-Dinitro-2-methylphenol | 4200 | U |
| 86-30-6 | N-Nitrosodiphenylamine (1) | 860 | U |
| 101-55-3 | 4-Bromophenyl-phenylether | 860 | U |
| 118-74-1 | Hexachlorobenzene | 860 | U |
| 87-86-5 | Pentachlorophenol | 4200 | U |
| 85-01-8 | Phenanthrene | 860 | U |
| 120-12-7 | Anthracene | 860 | U |
| 84-74-2 | Di-n-butylphthalate | 860 | U |
| 206-44-0 | Fluoranthene | 860 | U |
| 129-00-0 | Pyrene | 860 | U |
| 85-68-7 | Butylbenzylphthalate | 860 | U |
| 91-94-1 | 3,3'-Dichlorobenzidine | 1700 | U |
| 56-55-3 | Benzo(a)anthracene | 860 | U |
| 218-01-9 | Chrysene | 860 | U |
| 117-81-7 | bis(2-Ethylhexyl)phthalate | 300 | J |
| 117-84-0 | Di-n-octylphthalate | 860 | U |
| 205-99-2 | Benzo(b)fluoranthene | 860 | U |
| 207-08-9 | Benzo(k)fluoranthene | 860 | U |
| 50-32-8 | Benzo(a)pyrene | 860 | U |
| 193-39-5 | Indeno(1,2,3-cd)pyrene | 860 | U |
| 53-70-3 | Dibenz(a,h)anthracene | 860 | U |
| 191-24-2 | Benzo(g,h,i)perylene | 860 | U |

(1) - Cannot be separated from Diphenylamine

1F

SEMIVOLATILE ORGANICS ANALYSIS DATA SHEET
TENTATIVELY IDENTIFIED COMPOUNDS

EPA SAMPLE NO.

EKH62

Lab Name: S-CUBED Contract: 68-D9-0027

Lab Code: S3 Case No.: 14906 SAS No.: SDG No.: EKH56

Matrix: (soil/water) SOIL Lab Sample ID: EKH62

Sample wt/vol: 30.0 (g/mL) G Lab File ID: EKH62

Level: (low/med) LOW Date Received: 09/19/90

% Moisture: not dec. 23 dec._____ Date Extracted: 09/25/90

Extraction: (SepF/Cont/Sonc) SONC Date Analyzed: 10/11/90

GPC Cleanup : (Y/N) Y pH: 5.9 Dilution Factor: 1.000

Number TICs found: 4

CONCENTRATION UNITS:
(ug/L or ug/Kg) UG/KG

| CAS NUMBER | COMPOUND NAME | RT | EST. CONC. | Q |
|---|---|---|---|---|
| 1. | UNKNOWN | 7.52 | 1200 | ~~J~~ 4 8/11/90 |
| 2. 00100-52-7 | BENZALDEHYDE | 10.65 | 710 | J |
| 3. | UNKNOWN HYDROCARBON | 37.96 | 1600 | J |
| 4. | UNKNOWN HYDROCARBON | 39.96 | 1000 | J |
| 5. | | | | |
| 6. | | | | |
| 7. | | | | |
| 8. | | | | |
| 9. | | | | |
| 10. | | | | |
| 11. | | | | |
| 12. | | | | |
| 13. | | | | |
| 14. | | | | |
| 15. | | | | |
| 16. | | | | |
| 17. | | | | |
| 18. | | | | |
| 19. | | | | |
| 20. | | | | |
| 21. | | | | |
| 22. | | | | |
| 23. | | | | |
| 24. | | | | |
| 25. | | | | |
| 26. | | | | |
| 27. | | | | |
| 28. | | | | |
| 29. | | | | |
| 30. | | | | |

FORM I SV-TIC 1/87 Rev.

1D
PESTICIDE ORGANICS ANALYSIS DATA SHEET

EPA SAMPLE NO.

EKH56

Lab Name: S-CUBED Contract: 68-D9-0027

Lab Code: S3 Case No.: 14906 SAS No.: SDG No.: EKH56

Matrix: (soil/water) SOIL Lab Sample ID: EKH56

Sample wt/vol: 30.0 (g/mL) G Lab File ID: F1022023

Level: (low/med) LOW Date Received: 09/19/90

% Moisture: not dec. 32 dec._____ Date Extracted: 09/25/90

Extraction: (SepF/Cont/Sonc) SONC Date Analyzed: 10/23/90

GPC Cleanup: (Y/N) N pH: 8.2 Dilution Factor: 1.000

| CAS NO. | COMPOUND | CONCENTRATION UNITS: (ug/L or ug/Kg) UG/KG | Q |
|---|---|---|---|
| 319-84-6 | alpha-BHC | 12.00 | U |
| 319-85-7 | beta-BHC | 12.00 | U |
| 319-86-8 | delta-BHC | 12.00 | U |
| 58-89-9 | gamma-BHC (Lindane) | 12.00 | U |
| 76-44-8 | Heptachlor | 12.00 | U |
| 309-00-2 | Aldrin | 12.00 | U |
| 1024-57-3 | Heptachlor epoxide | 12.00 | U |
| 959-98-8 | Endosulfan I | 12.00 | U |
| 60-57-1 | Dieldrin | 23.00 | U |
| 72-55-9 | 4,4'-DDE | 23.00 | U |
| 72-20-8 | Endrin | 23.00 | U |
| 33213-65-9 | Endosulfan II | 23.00 | U |
| 72-54-8 | 4,4'-DDD | 23.00 | U |
| 1031-07-8 | Endosulfan sulfate | 23.00 | U |
| 50-29-3 | 4,4'-DDT | 23.00 | U |
| 72-43-5 | Methoxychlor | 120.00 | U |
| 53494-70-5 | Endrin ketone | 23.00 | U |
| 5103-71-9 | alpha-Chlordane | 120.00 | U |
| 5103-74-2 | gamma-Chlordane | 120.00 | U |
| 8001-35-2 | Toxaphene | 230.00 | U |
| 12674-11-2 | Aroclor-1016 | 120.00 | U |
| 11104-28-2 | Aroclor-1221 | 120.00 | U |
| 11141-16-5 | Aroclor-1232 | 120.00 | U |
| 53469-21-9 | Aroclor-1242 | 120.00 | U |
| 12672-29-6 | Aroclor-1248 | 120.00 | U |
| 11097-69-1 | Aroclor-1254 | 230.00 | U |
| 11096-82-5 | Aroclor-1260 | 230.00 | U |

1D
PESTICIDE ORGANICS ANALYSIS DATA SHEET

EPA SAMPLE NO.

EKH57

Lab Name: S-CUBED Contract: 68-D9-0027

Lab Code: S3 Case No.: 14906 SAS No.: SDG No.: EKH56

Matrix: (soil/water) SOIL Lab Sample ID: EKH57

Sample wt/vol: 30.0 (g/mL) G Lab File ID: F1022024

Level: (low/med) LOW Date Received: 09/19/90

% Moisture: not dec. 35 dec._____ Date Extracted: 09/25/90

Extraction: (SepF/Cont/Sonc) SONC Date Analyzed: 10/23/90

GPC Cleanup: (Y/N) N pH: 8.0 Dilution Factor: 1.000

| CAS NO. | COMPOUND | CONCENTRATION UNITS: (ug/L or ug/Kg) UG/KG | Q |
|---|---|---|---|
| 319-84-6 | alpha-BHC | 12.00 | U |
| 319-85-7 | beta-BHC | 12.00 | U |
| 319-86-8 | delta-BHC | 12.00 | U |
| 58-89-9 | gamma-BHC (Lindane) | 12.00 | U |
| 76-44-8 | Heptachlor | 12.00 | U |
| 309-00-2 | Aldrin | 12.00 | U |
| 1024-57-3 | Heptachlor epoxide | 12.00 | U |
| 959-98-8 | Endosulfan I | 12.00 | U |
| 60-57-1 | Dieldrin | 24.00 | U |
| 72-55-9 | 4,4'-DDE | 24.00 | U |
| 72-20-8 | Endrin | 24.00 | U |
| 33213-65-9 | Endosulfan II | 24.00 | U |
| 72-54-8 | 4,4'-DDD | 24.00 | U |
| 1031-07-8 | Endosulfan sulfate | 24.00 | U |
| 50-29-3 | 4,4'-DDT | 24.00 | U |
| 72-43-5 | Methoxychlor | 120.00 | U |
| 53494-70-5 | Endrin ketone | 24.00 | U |
| 5103-71-9 | alpha-Chlordane | 120.00 | U |
| 5103-74-2 | gamma-Chlordane | 120.00 | U |
| 8001-35-2 | Toxaphene | 240.00 | U |
| 12674-11-2 | Aroclor-1016 | 120.00 | U |
| 11104-28-2 | Aroclor-1221 | 120.00 | U |
| 11141-16-5 | Aroclor-1232 | 120.00 | U |
| 53469-21-9 | Aroclor-1242 | 120.00 | U |
| 12672-29-6 | Aroclor-1248 | 120.00 | U |
| 11097-69-1 | Aroclor-1254 | 240.00 | U |
| 11096-82-5 | Aroclor-1260 | 240.00 | U |

1D
PESTICIDE ORGANICS ANALYSIS DATA SHEET

EPA SAMPLE NO.

EKH58

Lab Name: S-CUBED Contract: 68-D9-0027

Lab Code: S3 Case No.: 14906 SAS No.: SDG No.: EKH56

Matrix: (soil/water) SOIL Lab Sample ID: EKH58

Sample wt/vol: 30.0 (g/mL) G Lab File ID: F1022025

Level: (low/med) LOW Date Received: 09/19/90

% Moisture: not dec. 33 dec._____ Date Extracted:09/25/90

Extraction: (SepF/Cont/Sonc) SONC Date Analyzed: 10/23/90

GPC Cleanup: (Y/N) N pH: 7.6 Dilution Factor: 1.000

| CAS NO. | COMPOUND | CONCENTRATION UNITS: (ug/L or ug/Kg) UG/KG | Q |
|---|---|---|---|
| 319-84-6 | alpha-BHC | 12.00 | U |
| 319-85-7 | beta-BHC | 12.00 | U |
| 319-86-8 | delta-BHC | 12.00 | U |
| 58-89-9 | gamma-BHC (Lindane) | 12.00 | U |
| 76-44-8 | Heptachlor | 12.00 | U |
| 309-00-2 | Aldrin | 12.00 | U |
| 1024-57-3 | Heptachlor epoxide | 12.00 | U |
| 959-98-8 | Endosulfan I | 12.00 | U |
| 60-57-1 | Dieldrin | 24.00 | U |
| 72-55-9 | 4,4'-DDE | 24.00 | U |
| 72-20-8 | Endrin | 24.00 | U |
| 33213-65-9 | Endosulfan II | 24.00 | U |
| 72-54-8 | 4,4'-DDD | 24.00 | U |
| 1031-07-8 | Endosulfan sulfate | 24.00 | U |
| 50-29-3 | 4,4'-DDT | 24.00 | U |
| 72-43-5 | Methoxychlor | 120.00 | U |
| 53494-70-5 | Endrin ketone | 24.00 | U |
| 5103-71-9 | alpha-Chlordane | 120.00 | U |
| 5103-74-2 | gamma-Chlordane | 120.00 | U |
| 8001-35-2 | Toxaphene | 240.00 | U |
| 12674-11-2 | Aroclor-1016 | 120.00 | U |
| 11104-28-2 | Aroclor-1221 | 120.00 | U |
| 11141-16-5 | Aroclor-1232 | 120.00 | U |
| 53469-21-9 | Aroclor-1242 | 120.00 | U |
| 12672-29-6 | Aroclor-1248 | 120.00 | U |
| 11097-69-1 | Aroclor-1254 | 56.00 | J |
| 11096-82-5 | Aroclor-1260 | 240.00 | U |

1D
PESTICIDE ORGANICS ANALYSIS DATA SHEET

EPA SAMPLE NO.

EKH59

Lab Name: S-CUBED Contract: 68-D9-0027

Lab Code: S3 Case No.: 14906 SAS No.: SDG No.: EKH56

Matrix: (soil/water) SOIL Lab Sample ID: EKH59

Sample wt/vol: 30.0 (g/mL) G Lab File ID: F1022026

Level: (low/med) LOW Date Received: 09/19/90

% Moisture: not dec. 74 dec._____ Date Extracted: 09/25/90

Extraction: (SepF/Cont/Sonc) SONC Date Analyzed: 10/23/90

GPC Cleanup: (Y/N) N pH: 7.7 Dilution Factor: 1.000

| CAS NO. | COMPOUND | CONCENTRATION UNITS: (ug/L or ug/Kg) UG/KG | Q |
|---|---|---|---|
| 319-84-6 | alpha-BHC | 31.00 | U |
| 319-85-7 | beta-BHC | 31.00 | U |
| 319-86-8 | delta-BHC | 31.00 | U |
| 58-89-9 | gamma-BHC (Lindane) | 31.00 | U |
| 76-44-8 | Heptachlor | 31.00 | U |
| 309-00-2 | Aldrin | 31.00 | U |
| 1024-57-3 | Heptachlor epoxide | 31.00 | U |
| 959-98-8 | Endosulfan I | 31.00 | U |
| 60-57-1 | Dieldrin | 62.00 | U |
| 72-55-9 | 4,4'-DDE | 62.00 | U |
| 72-20-8 | Endrin | 62.00 | U |
| 33213-65-9 | Endosulfan II | 62.00 | U |
| 72-54-8 | 4,4'-DDD | 62.00 | U |
| 1031-07-8 | Endosulfan sulfate | 62.00 | U |
| 50-29-3 | 4,4'-DDT | 62.00 | U |
| 72-43-5 | Methoxychlor | 310.00 | U |
| 53494-70-5 | Endrin ketone | 62.00 | U |
| 5103-71-9 | alpha-Chlordane | 310.00 | U |
| 5103-74-2 | gamma-Chlordane | 310.00 | U |
| 8001-35-2 | Toxaphene | 620.00 | U |
| 12674-11-2 | Aroclor-1016 | 310.00 | U |
| 11104-28-2 | Aroclor-1221 | 310.00 | U |
| 11141-16-5 | Aroclor-1232 | 310.00 | U |
| 53469-21-9 | Aroclor-1242 | 310.00 | U |
| 12672-29-6 | Aroclor-1248 | 310.00 | U |
| 11097-69-1 | Aroclor-1254 | 620.00 | U |
| 11096-82-5 | Aroclor-1260 | 620.00 | U |

1D
PESTICIDE ORGANICS ANALYSIS DATA SHEET

EPA SAMPLE NO.

EKH60

Lab Name: S-CUBED Contract: 68-D9-0027

Lab Code: S3 Case No.: 14906 SAS No.: SDG No.: EKH56

Matrix: (soil/water) SOIL Lab Sample ID: EKH60

Sample wt/vol: 30.0 (g/mL) G Lab File ID: F1022016

Level: (low/med) LOW Date Received: 09/19/90

% Moisture: not dec. 16 dec._____ Date Extracted: 09/25/90

Extraction: (SepF/Cont/Sonc) SONC Date Analyzed: 10/22/90

GPC Cleanup: (Y/N) N pH: 8.4 Dilution Factor: 1.000

| CAS NO. | COMPOUND | CONCENTRATION UNITS: (ug/L or ug/Kg) UG/KG | Q |
|---|---|---|---|
| 319-84-6 | alpha-BHC | 9.50 | U |
| 319-85-7 | beta-BHC | 9.50 | U |
| 319-86-8 | delta-BHC | 9.50 | U |
| 58-89-9 | gamma-BHC (Lindane) | 9.50 | U |
| 76-44-8 | Heptachlor | 9.50 | U |
| 309-00-2 | Aldrin | 9.50 | U |
| 1024-57-3 | Heptachlor epoxide | 9.50 | U |
| 959-98-8 | Endosulfan I | 9.50 | U |
| 60-57-1 | Dieldrin | 19.00 | U |
| 72-55-9 | 4,4'-DDE | 19.00 | U |
| 72-20-8 | Endrin | 6.20 | J |
| 33213-65-9 | Endosulfan II | 19.00 | U |
| 72-54-8 | 4,4'-DDD | 110.00 | |
| 1031-07-8 | Endosulfan sulfate | 19.00 | U |
| 50-29-3 | 4,4'-DDT | 19.00 | U |
| 72-43-5 | Methoxychlor | 95.00 | U |
| 53494-70-5 | Endrin ketone | 19.00 | U |
| 5103-71-9 | alpha-Chlordane | 95.00 | U |
| 5103-74-2 | gamma-Chlordane | 95.00 | U |
| 8001-35-2 | Toxaphene | 190.00 | U |
| 12674-11-2 | Aroclor-1016 | 95.00 | U |
| 11104-28-2 | Aroclor-1221 | 95.00 | U |
| 11141-16-5 | Aroclor-1232 | 95.00 | U |
| 53469-21-9 | Aroclor-1242 | 95.00 | U |
| 12672-29-6 | Aroclor-1248 | 95.00 | U |
| 11097-69-1 | Aroclor-1254 | 770.00 | |
| 11096-82-5 | Aroclor-1260 | 190.00 | U |

1D
PESTICIDE ORGANICS ANALYSIS DATA SHEET

EPA SAMPLE NO.

EKH61

Lab Name: S-CUBED Contract: 68-D9-0027

Lab Code: S3 Case No.: 14906 SAS No.: SDG No.: EKH56

Matrix: (soil/water) SOIL Lab Sample ID: EKH61

Sample wt/vol: 30.0 (g/mL) G Lab File ID: F1022019

Level: (low/med) LOW Date Received: 09/19/90

% Moisture: not dec. 15 dec._____ Date Extracted: 09/25/90

Extraction: (SepF/Cont/Sonc) SONC Date Analyzed: 10/23/90

GPC Cleanup: (Y/N) N pH: 8.4 Dilution Factor: 1.000

| CAS NO. | COMPOUND | CONCENTRATION UNITS: (ug/L or ug/Kg) UG/KG | Q |
|---|---|---|---|
| 319-84-6 | alpha-BHC | 9.40 | U |
| 319-85-7 | beta-BHC | 9.40 | U |
| 319-86-8 | delta-BHC | 9.40 | U |
| 58-89-9 | gamma-BHC (Lindane) | 9.40 | U |
| 76-44-8 | Heptachlor | 9.40 | U |
| 309-00-2 | Aldrin | 9.40 | U |
| 1024-57-3 | Heptachlor epoxide | 9.40 | U |
| 959-98-8 | Endosulfan I | 9.40 | U |
| 60-57-1 | Dieldrin | 19.00 | U |
| 72-55-9 | 4,4'-DDE | 19.00 | U |
| 72-20-8 | Endrin | 19.00 | U |
| 33213-65-9 | Endosulfan II | 19.00 | U |
| 72-54-8 | 4,4'-DDD | 19.00 | U |
| 1031-07-8 | Endosulfan sulfate | 19.00 | U |
| 50-29-3 | 4,4'-DDT | 19.00 | U |
| 72-43-5 | Methoxychlor | 94.00 | U |
| 53494-70-5 | Endrin ketone | 19.00 | U |
| 5103-71-9 | alpha-Chlordane | 94.00 | U |
| 5103-74-2 | gamma-Chlordane | 94.00 | U |
| 8001-35-2 | Toxaphene | 190.00 | U |
| 12674-11-2 | Aroclor-1016 | 94.00 | U |
| 11104-28-2 | Aroclor-1221 | 94.00 | U |
| 11141-16-5 | Aroclor-1232 | 94.00 | U |
| 53469-21-9 | Aroclor-1242 | 94.00 | U |
| 12672-29-6 | Aroclor-1248 | 94.00 | U |
| 11097-69-1 | Aroclor-1254 | 190.00 | U |
| 11096-82-5 | Aroclor-1260 | 190.00 | U |

1D
PESTICIDE ORGANICS ANALYSIS DATA SHEET

EPA SAMPLE NO.

EKH62

Lab Name: S-CUBED Contract: 68-D9-0027

Lab Code: S3 Case No.: 14906 SAS No.: SDG No.: EKH56

Matrix: (soil/water) SOIL Lab Sample ID: EKH62

Sample wt/vol: 30.0 (g/mL) G Lab File ID: F1022022

Level: (low/med) LOW Date Received: 09/19/90

% Moisture: not dec. 23 dec.____ Date Extracted: 09/25/90

Extraction: (SepF/Cont/Sonc) SONC Date Analyzed: 10/23/90

GPC Cleanup: (Y/N) N pH: 5.9 Dilution Factor: 1.000

| CAS NO. | COMPOUND | CONCENTRATION UNITS: (ug/L or ug/Kg) UG/KG | Q |
|---|---|---|---|
| 319-84-6 | alpha-BHC | 10.00 | U |
| 319-85-7 | beta-BHC | 10.00 | U |
| 319-86-8 | delta-BHC | 10.00 | U |
| 58-89-9 | gamma-BHC (Lindane) | 10.00 | U |
| 76-44-8 | Heptachlor | 10.00 | U |
| 309-00-2 | Aldrin | 10.00 | U |
| 1024-57-3 | Heptachlor epoxide | 10.00 | U |
| 959-98-8 | Endosulfan I | 10.00 | U |
| 60-57-1 | Dieldrin | 21.00 | U |
| 72-55-9 | 4,4'-DDE | 21.00 | U |
| 72-20-8 | Endrin | 21.00 | U |
| 33213-65-9 | Endosulfan II | 21.00 | U |
| 72-54-8 | 4,4'-DDD | 21.00 | U |
| 1031-07-8 | Endosulfan sulfate | 21.00 | U |
| 50-29-3 | 4,4'-DDT | 21.00 | U |
| 72-43-5 | Methoxychlor | 100.00 | U |
| 53494-70-5 | Endrin ketone | 21.00 | U |
| 5103-71-9 | alpha-Chlordane | 100.00 | U |
| 5103-74-2 | gamma-Chlordane | 100.00 | U |
| 8001-35-2 | Toxaphene | 210.00 | U |
| 12674-11-2 | Aroclor-1016 | 100.00 | U |
| 11104-28-2 | Aroclor-1221 | 100.00 | U |
| 11141-16-5 | Aroclor-1232 | 100.00 | U |
| 53469-21-9 | Aroclor-1242 | 100.00 | U |
| 12672-29-6 | Aroclor-1248 | 100.00 | U |
| 11097-69-1 | Aroclor-1254 | 210.00 | U |
| 11096-82-5 | Aroclor-1260 | 210.00 | U |