US EPA RECORDS CENTER REGION 5
487678

Time Collected: 3:20 P.M.

Lab # NOV 14 1979 4:55

SPECIAL ANALYSIS FORM

Date Collected: 11/13/79

Date Received D015405

ILLINOIS ENVIRONMENTAL PROTECTION AGENCY
DIVISION OF LAND/NOISE POLLUTION CONTROL

COUNTY:	FILE HEADING:	FILE NUMBER:
St. Clair	Fairmont City /Metro	16305001

SOURCE OF SAMPLE: (Exact Location) Monitor Well G607
Initial Volume - Unfiltered

PHYSICAL OBSERVATIONS, REMARKS:

TESTS REQUESTED: PCB's, scan chlorinated hydrocarbons

COLLECTED BY: R. Bloese, P. Mann, D. Tolen, K. Basie TRANSPORTED BY: R. Bloese, D. Tolen, K. Basie

LABORATORY

RECEIVED BY: L H DATE COMPLETED: 2/26/80 DATE FORWARDED: 2/27/80
J Hurley

PCBs = 0.6 ug/l

RECEIVED
FEB 27 1980
E.P.A. — D.L.P.C.
STATE OF ILLINOIS

LPC-8A 4/77 (NOT FOR DATA PROCESSING) D015405
NOV 14 1979

Time Collected: 4:00 P.M.

Date Collected: 11/13/79

SPECIAL ANALYSIS FORM

Lab # D015436 4.55p

Date Received NOV 14 1979

ILLINOIS ENVIRONMENTAL PROTECTION AGENCY
DIVISION OF LAND/NOISE POLLUTION CONTROL

COUNTY:	FILE HEADING:	FILE NUMBER:
St. Clair	Fairmont City /Metro	16305001

SOURCE OF SAMPLE: (Exact Location) Monitor Well G607

Removed 1 Volume - Unfiltered

PHYSICAL OBSERVATIONS, REMARKS:

TESTS REQUESTED: PCB's, scan chlorinated hydrocarbons

COLLECTED BY: R. Bloose, P. Mann, D. Tolan, K. Bosie TRANSPORTED BY: R. Bloose, D. Tolan, K. Bosie

LABORATORY

RECEIVED BY: [illegible] DATE COMPLETED: 2/26/80 DATE FORWARDED: 2/27/80

J. Hurley

PCBs = 0.5 ug/l

RECEIVED
FEB 27 1980
E.P.A. — D.L.P.C.
STATE OF ILLINOIS

LPC-8A 4/77 (NOT FOR DATA PROCESSING)

NOV 14 1979
D015436

Time Collected: 12:00 P.M

Date Collected: 11-13-79

SPECIAL ANALYSIS FORM

Lab # D015487 4:55p

Date Received NOV 14 1979

ILLINOIS ENVIRONMENTAL PROTECTION AGENCY
DIVISION OF LAND/NOISE POLLUTION CONTROL

COUNTY:	FILE HEADING:	FILE NUMBER:
ST. CLAIR	FAIRMONT/CITY	16305001

SOURCE OF SAMPLE: (Exact Location)

L-401

PHYSICAL OBSERVATIONS, REMARKS: DIRTY - VERY STRONG LEACHATE ODOR W/BLOTCHES OF OR THROUGHOUT

TESTS REQUESTED: PCB (BAKED)

COLLECTED BY: KEN BOSIE & DOUG TOLAN TRANSPORTED BY: DLPC

LABORATORY

RECEIVED BY: LH DATE COMPLETED: 2/26/80 DATE FORWARDED: 2/27/80

J Hurley

PCBs = 19. ug/l

Dieldrin = 0.95 ug/l

Heptachlor Epoxide = 0.02 ug/l

Chlordane = 0.96 ug/l

RECEIVED
FEB 27 1980
E.P.A. D.L.P.C.
STATE OF ILLINOIS

LPC-8A 4/77 (NOT FOR DATA PROCESSING)

D015487
NOV 14 1979

Time Collected: 11:40 A.M.

Date Collected: 11-13-79

Lab # D015408 4:55p

SPECIAL ANALYSIS FORM

Date Received NOV 14 1979

ILLINOIS ENVIRONMENTAL PROTECTION AGENCY
DIVISION OF LAND/NOISE POLLUTION CONTROL

COUNTY:	FILE HEADING:	FILE NUMBER:
ST. CLAIR	FAIRMONT / CITY	1630500 1

SOURCE OF SAMPLE: (Exact Location)

L-402

PHYSICAL OBSERVATIONS, REMARKS: DIRTY AND STRONG LEACHATE ODOR

TESTS REQUESTED: PCB (BAILED)

COLLECTED BY: KEN BOSIE & DOUG TOLMAN TRANSPORTED BY: DLPC

LABORATORY

RECEIVED BY: LH DATE COMPLETED: 2/26/80 DATE FORWARDED: 2/27/80 J Hurley

PCBs = 0.8 mg/l

RECEIVED
FEB 27 1980
F.P.A. - D.L.P.C.
STATE OF ILLINOIS

LPC-8A 4/77 (NOT FOR DATA PROCESSING) D015408 NOV 14 1979

D035439

Time Collected: 10:15 A.M.

Lab # D035439 4,55p

SPECIAL ANALYSIS FORM

Date Collected: 11-14-79

Date Received NOV 14 1979

ILLINOIS ENVIRONMENTAL PROTECTION AGENCY
DIVISION OF LAND/NOISE POLLUTION CONTROL

COUNTY:	FILE HEADING:	FILE NUMBER:
St. Clair	Fairmont City / Metro	16305001

SOURCE OF SAMPLE: (Exact Location) Monitor Well G11S

PHYSICAL OBSERVATIONS, REMARKS: Removed 1 Volume — Bailed; Unfiltered

TESTS REQUESTED: PCB's

COLLECTED BY: R. Bloose, K. Bosie, P. Mears, D. Tolan TRANSPORTED BY: R. Bloose, K. Bosie, D. Tolan

LABORATORY

RECEIVED BY: LH DATE COMPLETED: 2/20/80 DATE FORWARDED: 2/27/80 J. Hunter

PCBs < 0.1 ug/l

RECEIVED
FEB 27 1980
E.P.A. — D.L.P.C.
STATE OF ILLINOIS

NOV 14 1979

LPC-8A 4/77 (NOT FOR DATA PROCESSING) D035439

Time Collected: 10:45 A.M.

Date Collected: 11-14-79

Lab # D015450 4:55p

SPECIAL ANALYSIS FORM

Date Received NOV 14 1979

ILLINOIS ENVIRONMENTAL PROTECTION AGENCY
DIVISION OF LAND/NOISE POLLUTION CONTROL

COUNTY:	FILE HEADING:	FILE NUMBER:
St. Clair	Fairmont City/ Metro	16305001

SOURCE OF SAMPLE: (Exact Location) Monitor Well G11D

PHYSICAL OBSERVATIONS, REMARKS: Removed 1 Volume — Unfiltered, Bailed

TESTS REQUESTED: PCB's

COLLECTED BY: R. Bloese, K. Bosie, P. Mann, D. Tolon TRANSPORTED BY: R Bloese, K. Bosie, D. Tolon

LABORATORY

RECEIVED BY: L H DATE COMPLETED: 2/26/80 DATE FORWARDED: 2/27/80 J. Hurley

PCBs <0.1 ug/l

RECEIVED
FEB 27 1980
E.P.A. — D.L.P.C.
STATE OF ILLINOIS

LPC-8A 4/77 (NOT FOR DATA PROCESSING)

D015450
NOV 14 1979

R 70

...S ENVIRONMENTAL PROTECTION AGENCY
...ION OF LAND/NOISE POLLUTION CONTROL
CHEMICAL ANALYSIS FORM

...or Determining Type of Monitoring Point

	(G) Ground Water	(L) Leachate	(X) Special
...ter	(1) Monitor Well	(1) Flow or seep	(1) Soil
	(2) Private well	(2) Pond	(2) Waste
...ite	(3) Spring	(3) Collection System	(3) Other
...stream	(4) Lysimeter		
...-off	(5) Public W S		
...pounded			

...ame (Private Well, Stream, Spring, Impounded Water only)

L P C S M 0 1 0 (1) (8) SITE INVENTORY NUMBER 16305001 (9) (16)

MONITOR POINT NUMBER G ~~607~~ 145 (17) (20) DATE COLLECTED 111479 (21) (26)

St. Clair Co. - LPC REGION S (27)

Fairmont City (Location) Metro (Responsible Party)

Legal (1); Illegal (2): Indicate One: 2 (28) Board Order (X) (29)

Time Collected 11:20 a.m. p.m. Unable to collect sample (X) (30)

Stick-up ___ . ___ ft. (31) (33) Depth to water 11.6 ft. (from T.O.C.) (34) (36)

Sample temp. ___ ° (37) (39) Background (X). . . . (40)

Ground water sampled by (Indicate one): (1) Bailing; (2) Pumping; (3) Other (Specify) ___ 2 (41)

Sample Appearance: ___

Collector comments: Removed 1 Volume - Filtered; T.P. 20.1 ; 0.1 - Unfiltered

R. Bloose, K. Bosie, D. Tolan, P. Mann — LPC
Collected by — Div. or Company

P.C. Mann — LPC
Transported by — Div. or Company

LAB USE ONLY METALS ANALYZED AT CHAMPAIGN LABORATORY

Lab No. A 10778

Date Rec'd NOV 15 1979

Rec'd by KpDn Time 1:00 a.m. p.m.

Sample temp. acceptable YES NO

Sample properly preserved YES NO

Date completed DEC 14 1979

Date forwarded DEC 14 1979

John H. Craig
Supervisor Signature

Name MARION
Address of Lab

LPCSM020 Lab Comments:

PHENOLICS (27) (36)

INTERFEREN (37) (46)

CE (47) (56)

(57) (66)

(67) (76)

Private Lab (X) (77)

IEPA Lab (X) X (78)

		PARAMETERS*	PPM*
		LPCSM030	
27	X	Alkalinity[1]	850
31	X	Ammonia as N	6.3
37	X	Arsenic As	0.035
44	X	Barium Ba	0.5
49		BOD-5	
53	X	Boron B	0.3
58	X	Cadmium Cd	0.00
64	X	Calcium Ca	200
69	X	COD	34
73	X	Chloride Cl	50
		LPCSM040	
27	X	Chromium Cr (tot.)	0.00
33		Chromium Cr+6	
39	X	Copper Cu	0.01
45	X	Cyanide CN	0.00
52		Fecal Coli	
56	X	Fluoride F	0.31
61	X	Hardness $CaCO_3$	790
65	X	Iron Fe	29
70	X	Lead Pb	0.0
		LPCSM050	
27	X	Magnesium Mg	59
32	X	Manganese Mn	5.5
38	X	Mercury Hg	0.0000
46	X	Nickel Ni	0.0
51	X	Nitrate-nitrite N	0.0
56	X	Oil and Grease	8
60	X	OH (Unitary)	7.1
63	X	Phenolics *	—
70	X	Phosphorus P	1.9
75	X	Potassium K	3.5
		LPCSM060	
27	X	Sodium (Na+K)	850
31	X	Selenium Se	0.000
35	X	Silver Ag	0.00
44	X	Sodium Na	49
49	X	SO4 (Sulfate)	1400
53	X	Sulfate (SO4)	5
58	X	Zinc	0.02
63	X	SULFI	0.0

RECEIVED DEC 18 1979

E.P.A. – D.L.P.C.
STATE OF ILLINOIS

*Analyses are to be performed on unfiltered samples. *Values exceeding no. of places shown are reported in the lab comments section; tests requested but not run should also be explained in the lab comments section.

LPC-8 REV. 7/77

...ON OF LAND/NOISE POLLUTION CONTROL
CHEMICAL ANALYSIS FORM

Determining Type of Monitoring Point

(G) Ground Water	(L) Leachate	(X) Special
(1) Monitor Well	(1) Flow or seep	(1) Soil
(2) Private well	(2) Pond	(2) Waste
(3) Spring	(3) Collection System	(3) Other
(4) Lysimeter		
(5) Public W S		

...e
...tream
...off
...pounded

(Private Well, Stream, Spring, Impounded Water only)

L P C S M 0 1 0 (1) (8)

SITE INVENTORY NUMBER 16305001 (9) (16)

MONITOR POINT NUMBER G ~~607~~ 110 (17) (20)

DATE COLLECTED 111479 (21) (26)

St. Clair Co. - LPC REGION S (27)

Fairmont City / Metro
(Location) (Responsible Party)

Legal (1); Illegal (2); Indicate One: 2 (28) Board Order (X) (29)

Time Collected 10:45 a.m. p.m. Unable to collect sample (X) (30)

Stick-up ___ ft. (31) (33) Depth to water 9.3 ft. (from T.O.C.) (34) (36)

Sample temp. ___ ° (37) (39) Background (X). . . . (40)

Ground water sampled by (Indicate one): (1) Bailing; (2) Pumping; (3) Other (Specify) 2 (41)

Sample Appearance:

Collector comments: Removed 1 Volume - Filtered; T.D. 34.1; Oils - Unfiltered

R.Bloose, K.Bosio, D.Tolan, P.Mann — LPC
Collected by — Div. or Company

G.C. Mann — LPC
Transported by — Div. or Company

10779

LAB USE ONLY

Lab No. A METALS ANALYZED AT CHAMPAIGN LABORATORY

Date Rec'd NOV 15 1979

Rec'd by LPDM Time 1:00 p.m.

Sample temp. acceptable YES NO
Sample properly preserved YES NO

Date completed DEC 14 1979
Date forwarded DEC 14 1979

John H. Cray
Supervisor Signature

Name MARION
Address
of Lab

(27) (36)
(37) (46)
(47) (56)
(57) (66)
(67) (76)

Private Lab (X) (77)
IEPA Lab (X) X (78)

		PARAMETERS*	PPM*
27	X	Alkalinity	420
31	X	Ammonia as N	12.5
37	X	Arsenic As	0.035
44	X	Barium Ba	0.4
49		BOD-5	
53	X	Boron B	0.3
58	X	Cadmium Cd	0.00
64	X	Calcium Ca	100
69	X	COD	34
73	X	Chloride Cl	11
		LPCSM040	
27	X	Chromium Cr (t+6)	0.00
33		Chromium Cr+6	
39	X	[illegible]	0.01
45	X	Cyanide CN	0.00
52		Fecal Coli	
56	X	Fluoride F	0.12
61	X	Hardness CaCO3	390
65	X	Iron Fe	5.7
70	X	[illegible]	0.0
		[illegible]	
27	X	[illegible]	32
32	X	[illegible]	0.62
38	X	[illegible]	0.0000
46	X	Nickel Ni	0.0
51	X	Nitrate-nitrite N	0.0
56	X	Oil and Grease	2
60	X	pH (units)	7.4
63	X	[illegible]	0.005
70	X	[illegible]	1.2
76	X	[illegible]	5.2
		[illegible]	
27	X	[illegible]	380
31	X	[illegible]	0.000
37	X	[illegible]	0.00
44	X	[illegible]	21
49	X	[illegible]	760
53	X	[illegible]	0
58	X	[illegible]	0.02
64	X	54 LF I	0

RECEIVED
DEC 18 1979
E.P.A. - D.L.P.C.
STATE OF ILLINOIS

*Analyses are to be performed on unfiltered samples. *Values exceeding no. of places shown are reported in the lab comments section; tests requested but not run should also be explained in the lab comments section.

LPC-8 REV. 7/77

...RONMENTAL PROTECTION AGENCY
...LAND/NOISE POLLUTION CONTROL
...CHEMICAL ANALYSIS FORM

...rmining Type of Monitoring Point

(G) Ground Water	(L) Leachate	(X) Special
(1) Monitor Well	(1) Flow or seep	(1) Soil
(2) Private well	(2) Pond	(2) Waste
(3) Spring	(3) Collection System	(3) Other
(4) Lysimeter		
(5) Public W S		

(Private Well, Stream, Spring, Impounded Water only)

...C S M 0 1 0 (8) SITE INVENTORY NUMBER 1 6 3 0 5 0 0 1 (9) (16)

...ITOR POINT NUMBER G 1 1 S (17) (20) DATE COLLECTED 1 1 1 4 7 9 (21) (26)

St. Clair Co. - LPC REGION S (27)

Fairmont City (Location) / Metro (Responsible Party)

Legal (1); Illegal (2); Indicate One: 2 (28) Board Order (X) (29)

Time Collected 10:15 a.m. p.m. Unable to collect sample (X) (30)

Stick-up ___ . ___ ft. (31) (33) Depth to water 8.0 ft. (from T.O.C.) (34) (36)

Sample temp. ___ ° (37) (39) Background (X) . . . (40)

Ground water sampled by (Indicate one): (1) Bailing; (2) Pumping; (3) Other (Specify) 2 (41)

Sample Appearance:

Collector comments: Removed 1 Volume; Filtered; T.D. 15.1; Oils - Unfiltered

R. Bloese, K. Bosie, P. Mann, D. Tolan — LPC
Collected by — Div. or Company

PC Mann — LPC
Transported by — Div. or Company

LAB USE ONLY — METALS ANALYZED AT CHAMPAIGN LABORATORY

Lab No. 10780

Date Rec'd NOV 15 1979

Rec'd by KPDM Time 1:00 a.m. p.m.

Sample temp. acceptable YES NO

Sample properly preserved YES NO

Date completed DEC 14 1979

Date forwarded DEC 14 1979

John H. Craig
Supervisor Signature

Name MARION
Address of Lab

LPCSM030 Lab Comments:

(27) (36)

(37) (46)

(47) (56)

(57) (66)

(67) (76)

Private Lab (X) (77)

IEPA Lab (X) X (78)

LPCSM030

		PARAMETERS+	PPM*
27	X	Alkalinity[1]	380.
31	X	Ammonia as N	2.3
37	X	Arsenic As	0.012
44	X	Barium Ba	0.2
49		BOD -5	
53	X	Boron B	0.4
58	X	Cadmium Cd	0.00
64	X	Calcium Ca	220.
69	X	COD	16.
73	X	Chloride Cl	49.

LPCSM040

27	X	Chromium Cr (tot)	0.00
33		Chromium Cr+6	
39	X	Copper Cu	0.02
45	X	Cyanide CN	0.00
52		Fecal Coli (#/100 ml)	
56	X	Fluoride F	0.4
61	X	Hardness $CaCO_3$	890.
65	X	Iron Fe	14.
70	X	Lead Pb	0.0

LPCSM050

27	X	Magnesium Mg	66.
32	X	Manganese Mn	1.8
38	X	Mercury Hg	0.0000
46	X	Nickel Ni	0.0
51	X	Nitrate-nitrite N	0.0
56	X	Oil and Grease	0.
60	X	pH (Units)	7.2
63	X	Phenolics	0.005
70	X	Phosphorus P	0.95
76	X	Potassium K	4.2

LPCSM060

27	X	R.O.E. (180°C)	1150.
31	X	Selenium Se	0.000
38	X	Silver Ag	0.00
44	X	Sodium Na	34.
49	X	SC (umhos/cm)	1400.
53	X	Sulfate SO_4	490.
58	X	Zinc Zn	0.01
63	X	SULFI	0.

RECEIVED DEC 18 1979 E.P.A. - D.L.P.C. STATE OF ILLINOIS

+Analyses are to be performed on unfiltered samples. *Values exceeding no. of places shown are reported in the lab comments section; tests requested but not run should also be explained in the lab comments section.

[1] Alkalinity is to be determined as ppm of $CaCO_3$ ... ph 4.5.

LPC-8 REV. 7/77

ENVIRONMENTAL PROTECTION AGENCY STATE OF ILLINOIS

L P C F C O 5 5 C
(1) (8) (9)

INSPECTION REPORT - SITE INVENTORY NO. 1630500 1
(11) (18)

ST. CLAIR Co. - L.P.C. Region # 5 (19) Date 090578 (20) (25)

FAIRMONT CITY / METRO
(Location) (Responsible Party)

Letter Sent (Yes or No) N (26)

Samples Taken: Yes ( ) No (X) Time: From 04:30 pm
Ground Water( ) Surface( ) Other( ) To 04:40 pm
Photos Taken: Yes ( ) No (X) Interviewed Mr. Doe

Weather 84° - dry

Inspector P M M (27) (29)

Previous Inspection 8/29/78 Previous Correspondence 8/28/74 Site Open: Yes( ) No (X)

OPERATIONAL STATUS:		TYPE OF OPERATION:				AUTHORIZATION:	
Operating	( )	Sanitary Landfill	(X)	Storage	( )	E.P.A. Permit	( )
Temporarily Closed	( )	Random Dump	( )	Salvage	( )	Variance	( )
Closed Not Covered	( )	Other _____	( )	A.C.D.	( )	21(e)	( )
Closed and Covered	(X)	Quantity Received Daily(1-6)	2 (30)			Board Order	( )
						Illegal (5)	(X) 5 (31)

SITE EVALUATION

Leachate:	Ponded on site (X)	32
	Flowing on site (X)	33
	Seeping (X)	34
	Evidence of past flows (X)	35
	Observed garbage( ) refuse( ) in standing water (X)	36
	Flow entering surface water (5)	37
	Flow leaving site (1-3)	38
Open Burning:	Observed (5)	39
	Underground fire (5)	40 5
	Evidence of recent open burning (5)	41
	Insufficient fire protection equipment provided (2)	42
Daily Cover:	Not provided on previously deposited refuse (5)	43
	Not provided on previous operating day (4)	44
	Inadequate depth over entire area (3)	45
	Inadequate depth over only a portion of area (1-2)	46
Intermediate Cover:	Inadequate depth in portion(s)( ) or entire( ) required areas(1-3)	47
Final Cover:	Inadequate depth in some areas (1-3)	48
	Inadequate depth over entire area 60 days after area closure (4)	49
	None 60 days after area closure (5)	50
Unloading not supervised (3)		51
Refuse not deposited at toe of slope ( )		
Inadequate spreading and compacting ( )		
Insufficient operable equipment on site as required ( )	(2 ea. 2-8)	52
Operational roads unsatisfactory ( )		
Blowing litter( ), dust nuisance observed( ), Odor detected( )	(1 ea. 1-3)	53
Permit( ) Board Order( ) Violation noted	(2 ea. 2-4)	54
Liquids( ) Solids( ) not permitted (5)		55
Inadequate site restriction( ) Site concealment( )	(2 ea. 2-4)	56
Inadequate: Shelter( ) Sanitary Facilities( ) Emergency Communications( )	(1 ea.1-3)	57
Scavenging by: Operator( ) Others( ) observed (1-3)		58
Salvaging Observed( ):Improperly conducted in:Location( )Operation( )Storage( )	(1-3)	59
Evidence of vectors observed ( )	(1-3)	60
Animal feeding observed ( )	(1-3)	61

General Compliance ( ) Improvement Needed (X) Improvement Observed ( )

Signature of operator does not necessarily imply agreement with the above noted observations.

Signature _____
Owner/Operator

LPC-5 (Rev. 6-75-500)

ENVIRONMENTAL PROTECTION AGENCY STATE OF ILLINOIS
INTER–OFFICE CORRESPONDENCE

DATE: [redacted] 9/5/78

MEMO TO: File

FROM: PMM - Southern

SUBJECT: St. Clair **COUNTY – D.L.P.C. Inspection** 1630500 1
Fairmont City / Metro

GENERAL REMARKS: Underground fire still burning and slowly spreading (as compared to 8/29/78) - No effort has been made to extinguish or control - Observed that the recently installed monitor well (# L401) casing has burned off to grd level -

INTERVIEW: Attempted to call local representative C. McGuiness and District Eng Sill on 9/6/78 - Explained situation to office Manager for Mr Sill - he promised to call me back w/ information on the status, as on 8/31/78 the local representative said he had arranged for a dozer to come in and start work -

DIAGRAM:

LPC-19

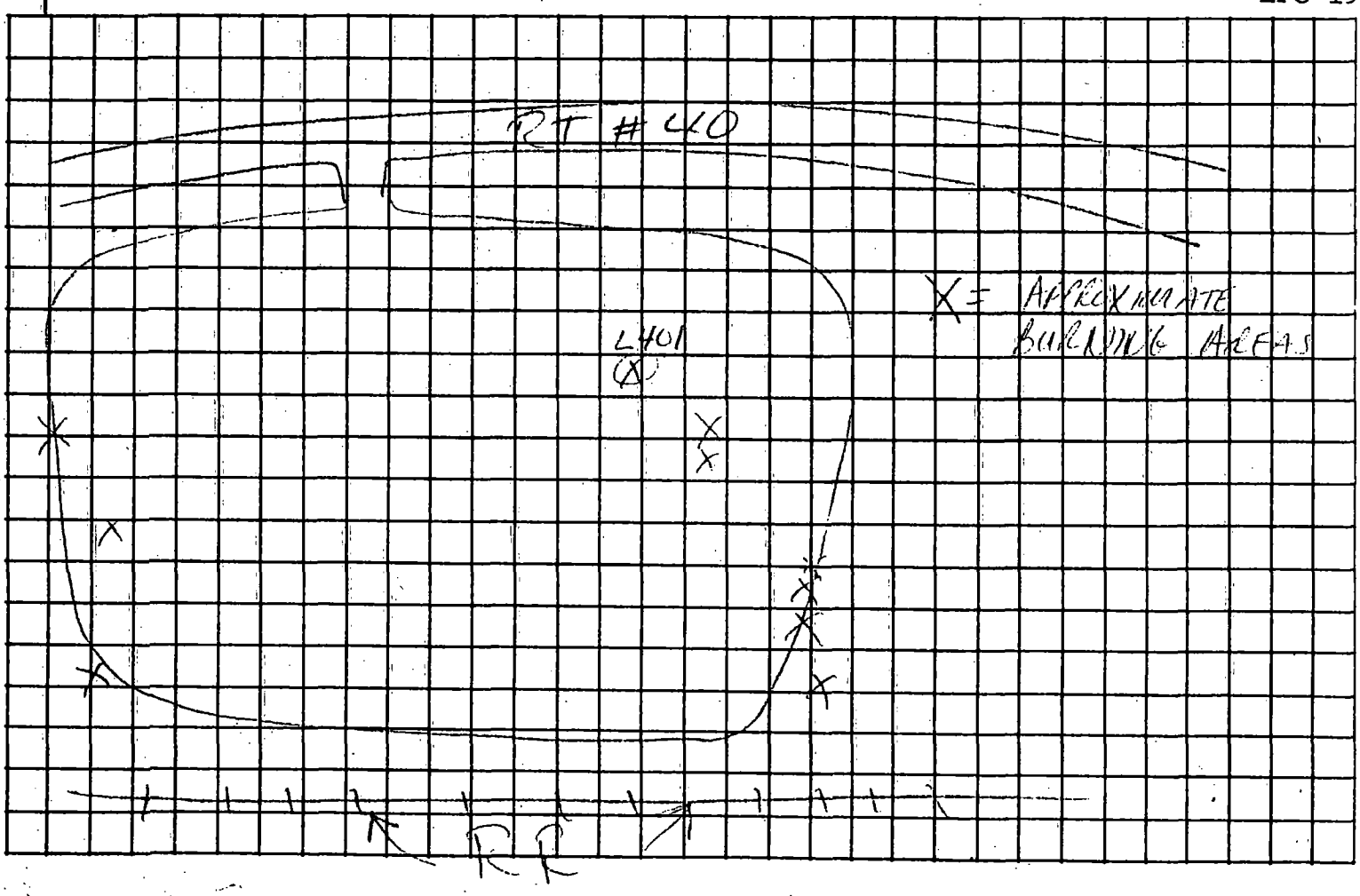

MEMORANDUM **5SCRL**

DATE: 9/26/91

SUBJECT: Addendum to Data Review for SMO Case/6517,
SDG ENM01-19 Samples for Metro Disposal System, IL Organics

FROM: David A. Payne, Chief
Laboratory Scientific Section, CRL

TO: FIT User

This is a very messy case to review. Also FIT should not have scheduled low concentration samples when they contain petroleum products and interferences (Samples EHM03 & EKF57 field duplicates). The character of the two appear to be the same. The semi-vol extract can not be concentrated per the SOW because of too much petroleum product, but note the Aroclor content of these samples (less than TSCA 50 ppm criteria for whole water samples). The qualitative characters are the same, the amounts of oil differ.

Note that Sample EKF57 is on hold. We do not expect any data to be submitted by PEI for this sample for semi-vol, and volatiles. This should have been scheduled as a different type sample.

Volatiles

Review subsequent to Weston/ESAT showed notes and data on Quant Reports for Samples EHM01 through EHM03 provide for sample dilutions (or dilution factors) different from those on original submitted Form IA's of SDG EHM01. This was discussed with PEI on 9/13/91 or 9/16/91 by phone.

PEI FAXED new Form IA's for Samples EHM01 EHM02DL, and EHM03. I have replaced these in data package. These three Form IA's have or use dilution factors consistent with records or notes on corresponding Quant Reports. New Form IA's were FAXED to CRL on 9/17/91.

On 9/18/91, questions were FAXED to PEI concerning volatile Samples EHM91RE, EKX66, ES 391 DL, ES 391, ES 388.

These have not been answered. Chlorobenzene is different. Volatile data are qualified within the context of these questions for the five Vol. Samples until PEI can provide definitive answers.

Semi-Volatiles

Samples EHM02, EHM04, and EKX66 (Semi-Vol.) were extracted 23 to 24 days after their contractual holding times with no explanation. FAX of 9/8/91 from J. Pels to PEI has not been answered.

We recommend non-payment and the semi-vol data as non-usable for these three samples, until PEI provides more definitive answers, or provides the original data that caused the samples to be re-extracted 23-24 days after their maximum allowable holding time.

On 9/17/91, PEI submitted new semi-volatile Form IB, IC, and IF for Sample EHM03. It was in form of B/N extract at five fold dilution and Acid Extraction at 1X dilution. This was surprising as no supporting analytical information (GC/MS tunes, blanks, surrogates) is available for both sets of Forms. Also data are inconsistent with EHM03RE. EHM03 Semi-Vol Data are not defensible because they lack adequate documentation of the CLP SOW. The semi-volatile data are unusable at present.

Pesticide/PCB Results

The Aroclor results in Samples EHM03 and EKF57 are qualitative present at large concentration. Accuracy may suffer somewhat because of petroleum presence; however, do not discard these results.

5SCRL:DPayne:bs:09/26/91

Chron

File

NARRATIVE

CONTRACTOR: P E I CASE:16377

1.HOLDING TIME

Water and soil were sampled on the 8th and 9th of May 1991. The laboratory received eleven (11) water and eight (8) soil samples on the 9th and 10th of May 1991 in good condition for full organic analysis. (To date sample EKF57 was not analyzed by lab for VOA and SVOA fractions).

Volatile water sample EHM02DL exceeded the technical holding time (14 days) by two (2) days and VOA soil sample ES391DL exceeded holding time (14 days) by fifteen (15) days.

All positive VOA result in samples EHM02DL and ES391DL are flagged as estimated (J) and any non-detect results are flagged with the sample quantitation limit as estimated (UJ).

All other Volatile water and soil samples were analyzed within technical holding time criteria (14 days).

Semivolatile water samples EHM02 and EHM04 were extracted twenty four (24) days and sample EKX66 was extracted twenty three (23) days into the technical holding time for unusable data.

Reviewed by:_____Krystyna Minczuk_____

Date:_____8 July 1991_____

Therefore any positive result (J) and any non-detect SVOA result is flagged as unusable (R) in EHM02, EHM04 and EKX66 samples.

All other Semivolatile samples were extracted within seven (7) days technical holding time criteria for water and fourteen (14) days for soil.

All Pesticide samples were extracted within seven (7) days technical holding time criteria for water and fourteen (14) days for soil.

All Semivolatile and Pesticide extracts were analyzed within forty (40) days from extraction required by holding time protocol.

2.GC/MS TUNING

GC/MS tuning complied with the mass list and ion abundance criteria for BFB and DFTPP.

RTs for DDT > 12 minutes.This RTs met QC criteria.

DDT degradation check using evaluation mix B on primary and confirmation columns met QC criteria for SDG#EHM01.

Reviewed by:_____Krystyna Minczuk_____

Date:_____8 July 1991_____

3.CALIBRATION

Initial and continuing calibration of VOA and SVOA standards were evaluated for the target compound list (TCL) and outliers are recorded on the outlier forms included as part of this narrative.

Linearity check of Pesticide standards based on calibration factor (CF) of evaluation Mix A,B and C were within 10% RSD on the primary column.

Percent D (%D) on continuing calibration was outside QC limit (20%) for Endosulfan II (23%) on 5/31/91 on the confirmation column. This did not effect the data.

4.METHOD BLANK

VBLKWN5, VBLKJ3, VBLKJ6, VBLKJ9 and VBLKC2 were low level water Volatile method blanks.

VBLKN5 contained no VOA TCLs and TICs.

VBLKJ3 contained: Methylene Chloride, Acetone, 2-Butanone, 4-Methyl-2-Pentanone and four (4) VOA TICs.

VBLKJ6 contained: methylene Chloride, Chloroform and two (2) VOA TICs.

Reviewed by:_____Krystyna Minczuk_____

Date:_____8 July 1991_____

VBLKJ9 contained: Acetone and one (1) VOA TIC.

VBLKC2 contained: Methylene Chloride and one (1) VOA TIC.

VBLKJ1 and VBLKJ2 were low level soil Volatile method blanks.

VBLKJ1 contained: Methylene Chloride, 2-Butanone, 1,1,1-Trichloroethane and no VOA TICs.

VBLKJ2 contained: 2-Butanone and one (1) VOA TIC.

VBLKD5 was med level soil Volatile method blank.

VBLKD5 contained: 2-Butanone and one (1) VOA TIC.

Methylene Chloride, Acetone and 2-Butanone are common laboratory contaminants. The presence of Methylene Chloride, Acetone and 2-Butanone in any of the associated samples is flagged as non-detect (U) when sample result was less than (<) 10 times the blank result.

The presence of 4-Methyl-2-Pentanone, Chloroform and 1,1,1-Trichloroethane in any of the associated samples is flagged as non-detect (U) when sample result was less than (<) 5 times the blank result.

The Volatile method blank summary (Form IV VOA) lists the associated samples.

Reviewed by:_____Krystyna Minczuk_____

Date:_____8 July 1991_____

SBLKX3 and SBLKB7 were the level water Semivolatile method blanks.

SBLKX3 and SBLKB7 contained bis(2Ethylhexyl)Phthalate and one (1) SVOA TIC in SBLKB7.

SBLKY9 and SBLKY7 were the low level soil Semivolatile method blanks.

SBLKY9 and SBLKY7 contained no SVOA TCLs and one SVOA TIC each.

Bis(2Ethylhexyl)phthalate is common laboratory contaminant.

The presence of bis(2Ethylhexyl)phthalate in any of the associated samples is flagged as non-detect (U) when sample result is less than (<) 10 times the blank result.

The SVOA method blank summary (FORM IV SV) lists the associated samples.

PBLKX5 was the low level water Pesticide method blank.

PBLKX5 was clean.

PBLKY7 and PBLKY8 were the low level soil Pesticide method blanks.

Both blanks contained no Pesticide residues.

Pesticide method blank summary (Form IV pest) lists the associated samples.

Reviewed by:_____Krystyna Minczuk_____

Date:_____8 July 1991_____

5. SURROGATE RECOVERY

All water Volatile surrogate recoveries met QC criteria.

Soil Volatile surrogates: S1(Toluene d8) in samples: ES388 (119%), ES388RE(120%), ES389MS(118%), and S2(Bromofluorobenzene) in sample: ES389MSD(72%) were out of control. Therefore any positive VOA result in samples noted above is flagged as estimated (J) and non-detect VOA result is flagged with the sample quantitation limit as estimated (UJ).

Semivolatile water surrogates in base/neutral fraction S1(Nitrobenzene d5) in samples: EJW99(33%), EMN98MS(33%), EHM03(12%), EHM03RE(12%); S2(2-Fluorobiphenyl) in EHM03(29%) and EHM03RE(23%); S3(Terphenyl d14) in samples: EMH01(12%), EMW94(12%), EMN98(1%), EMN98MS(4%), EMN98MSD(5%), EHM03(16%), EHM03RE(16%) and in acid fraction S5(2-Fluorophenol) in sample: EHW91(16%) are recovered below QC limits.

Any positive Semivolatile result in base/neutral fraction in samples: EMN94, EMN98MS and EMN98MSD is flagged as estimated (J) and any non-detect Semivolatile result in EMN94, EMN98MS and EMN98MSD is flagged as unusable (R) (S3 recovery less than 10%).

Reviewed by:_____Krystyna Minczuk_____

Date:_____8 July 1991_____

Any positive SVOA result in base/neutral fraction in samples EHM03 and EHM03RE is flagged as estimated (J) and any non-detect SVOA result in base/neutral fraction is flagged with the sample quantitation limit as estimated (UJ).

All other water Semivolatile surrogate met QC criteria in SDG#EHM01.

Soil surrogate S1(Phenol d6) was below QC limit in sample ES390MS(21%).

The protocol requires two or more SVOA surrogates to be out of control in the same fraction to require qualification, therefore no qualification is necessary.

All other SVOA soil surrogate recoveries met QC criteria.

Water Pesticide surrogate S1(DBC) in samples: EKX66(11%), EHM03(0%) and EKF57(0%) was out of QC limit. — This is as it should be – DiPayne 9-17-91

Because in samples EHM03 and EKF57 DBC surrogate recoveries were unobtainable due to present Aroclor 1242 pattern, ~~therefore any positive result in samples noted above is flagged as estimated (J) and any non-detect result is flagged with the sample~~ quantitation limit as estimated (UJ) in sample EKX66. In samples EHM03 and EKF57 the non-detect result is unusable (R), because surrogate recovery is zero (0).

All other soil Pesticide surrogate recoveries met QC criteria.

Reviewed by: Krystyna Minczuk

Date: 8 July 1991

The Aroclor results are real and should be used – DiPayne 9-17-91

6.MATRIX SPIKE/MATRIX SPIKE DUPLICATE

Sample EHM02 and EMN98 were used as the water spike for low level Volatile.

Water Volatile matrix spike: Chlorobenzene MS(43%),MSD(34%) and RPD(24%) in EHM02 was out of control; therefore any positive result for Chlorobenzene is flagged as estimated (J) and any non-detect result for Chlorobenzene is flagged with the sample quantitation limit as estimated (UJ) in unspiked sample EHM02.

Sample ES389 was used as the soil spike for low level Volatile.

Soil Volatile matrix spike/matrix spike duplicate and RPD met QC criteria.

Sample ES398 was used as the water spike for low level Semivolatile.

Water SVOA spike: 4-Nitrophenol MS(82%) and MSD(100%) was slightly upper QC limit. No qualification is necessary.

This result does not effect the data.

Sample ES390 was used as the soil spike for low level SVOA.

SVOA soil spikes: N-nitroso-di-n-prop.(1) MS(39%) was slightly below QC requirements (41-126%).

Reviewed by:_____Krystyna Minczuk_____

Date:_____8 July 1991_____

Any positive result for N-nitroso-di-n-prop.(1) is flagged as estimated (J) and any non-detect result for N-nitroso-di-n-prop. is flagged with the sample quantitation limit as estimated (UJ) in the unspiked sample ES390.

Sample EMN98 was used as the water spike for low level Pesticide. Matrix spikes: Gamma-BHC MS(140%),MSD(153%); Aldrin MS(33%), MSD(34%) and 4,4'-DDT MS(16%), MSD(11%), RPD(30%) were out of QC limit. Therefore any positive result for Gamma-BHC, Aldrin and 4,4'-DDT is flagged as estimated (J) and any non-detect result for those compounds is flagged with the sample quantitation limit as estimated (UJ) in unspiked sample EMN98.

Sample ES390 was used as the soil spike for low level Pesticide. All soil MS/MSD's and RPD's met QC criteria.

7.FIELD BLANK AND FIELD DUPLICATE

Sample EHM04 and EJW99 were the field blanks. Sample EHM03 was a duplicate of EKF57; however EKF57 was not analyzed for VOA and SVOA compounds.

Sample EHM04 contained: no VOA and SVOA TCLs, no VOA and SVOA TICs and no Pesticide residues.

Reviewed by:_____Krystyna Minczuk_____

Date:_____8 July 1991_____

Sample EJW99 contained VOA compounds: Chloroform (4 UG/L), Bromodichloromethane (3 UG/L), Dibromochloromethane (8 UG/L), no VOA TICs, no SVOA target compounds, no SVOA TICs ~~and~~ no Pesticide residues. MK

Sample EHM03 contained VOA: 1,1,1-Trichloroethane (1 UG/L), Benzene (7 UG/L), Chlorobenzene (160 UG/L) and one (1) VOA TIC, no SVOA TCLs and fifteen (15) SVOA TICs and Aroclor 1242 (36 UG/L).

EHW94 contained: no VOA TCLs and TICs, no SVOA TCLs and TICs and no Pesticide residues.

EKX66 contained: no VOA TCLs and one (1) VOA TIC, no SVOA TCLs and TICs and no Pesticide residues.

8. INTERNAL STANDARDS

Volatile internal standards: IS1 (Bromochloromethane) in sample:ES389MS; IS2(1,4-Difluorobenzene) in sample: ES389MS and IS3(Chlorobenzene d5) in samples: ES388, ES389, ES388RE, ES389MS and ES389MSD were below the lower limit for internal standard areas.

Any positive VOA result is flagged as estimated (J) and any non-detect VOA result is flagged with the sample quantitation limit as estimated (UJ).

Reviewed by:_____Krystyna Minczuk_____

Date:_____8 July 1991_____

Please, refer to Table 4 to locate the VOA compounds that are quantitated using IS1, IS2 and IS3.

All other VOA internal standard areas and RTs met QC criteria.

SVOA internal standards: IS1(1,4-Dichlorobenzene d4) in sample EHM03RE; IS2(Naphthalene d8) in sample: EHM03RE; IS3(Acenapfthene d10) in samples: EHM03 and EHM03RE; IS6(Perylene d12) in sample: EHM03 were below the lower limit for internal standard areas. Any positive SVOA result is flagged as estimated (J) and any non-detect SVOA result is flagged with the sample quantitation limit as estimated (UJ).

Please, refer to Table 4 to locate the SVOA compounds that are quantitated using IS1, IS2, IS3 and IS6.

9.COMPOUND IDENTIFICATION

After reviewing the mass spectrum and chromatographs it appears that all compounds were properly identified.

10.COMPOUND QUANTITATION AND REPORTED DETECTION LIMITS

All VOAs and SVOAs target compound quantitative results were properly reported.

The CRQLs were adjusted to reflect sample dilutions.

Reviewed by:_____Krystyna Minczuk_____

Date:_____8 July 1991_____

11.SYSTEM PERFORMANCE

GC/MS baseline indicated acceptable performance.

GC base line indicated acceptable performance.

12.ADDITIONAL INFORMATION

Acetone and 2-Butanone (VOA) exceeded the calibration range in soil sample EHM02 ; Acetone exceeded calibration range in water sample EHW89; therefore in reanalyzed sample EHM02DL Acetone and 2-Butanone and in reanalyzed sample EHW89DL Acetone result are used in data validation.

VOA soil samples: ES389 and ES391 were re-run as diluted 1:5.

VOA soil sample ES389 had surrogate and internal standards outside the specified limits. Samples was reanalyzed with the similar results.

SVOA water sample: EHM03 had internal standards out of QC limit. Sample was reanalyzed with the similar results.

A large number of VOA TICs were noted in samples: EHM02 (9), ES389 (9) and ES390 (6).

A large number of SVOA TICs were noted in samples: EMH01 (6), EHM03 (15) and EHM03RE (16).

No additional case specific problems noted by this reviewer.

Reviewed by:_____Krystyna Minczuk_____

Date:_____8 July 1991_____

CALIBRATION OUTLIERS
VOLATILE HSL COMPOUNDS

CASE/SAS # 16377 CONTRACTOR PEI

Instrument # Q	Init. Cal.			Cont. Cal.			Cont. Cal.			Cont. Cal.			Cont. Cal.		
DATE/TIME:	5-13-91 19:29			5-14-91 21:57											
	RF	%RSD	*	RF	%D	*	RF	%D	*	RF	%D	*	RF	%D	*
Chloromethane	.590	30.9	J	.788	33.4	J									
Bromomethane															
Vinyl Chloride															
Chloroethane															
Methylene Chloride															
Acetone															
Carbon Disulfide															
1,1-Dichloroethane															
1,1-Dichloroethene															
Trans-1,2-Dichloroethene															
Chloroform															
2-Butanone	.172	37.9	J	.129	25.1	J									
1,2-Dichloroethane															
1,1,1-Trichloroethane															
Carbon Tetrachloride															
Vinyl Acetate															
Bromodichloromethane															
1,2-Dichloropropane															
Trans-1,3-Dichloropropene															
Trichloroethene															
Dibromochloromethane															
1,1,2-Trichloroethane															
Benzene															
cis-1,3-Dichloropropene															
2-Chloroethylvinylether															
Bromoform															
4-Methyl-2-Pentanone															
2-Hexanone															
Tetrachloroethene															
1,1,2,2-Tetrachloroethane															
Toluene															
Chlorobenzene															
Ethylbenzene															
Styrene															
m-Xylene															
o/p-Xylene															

AFFECTED SAMPLES:

VBLKN5
EJW99
EHW92
EJW94
EMN98
EMN98MS
EMN98MSD

Reviewer's Initials/Date: KM 7/3/91

* These flags should be applied to the analytes on the sample data sheets.

CALIBRATION OUTLIERS
VOLATILE HSL COMPOUNDS

CASE/SAS # 16377 CONTRACTOR PEI

Instrument # Q	Init. Cal.			Cont. Cal.			Cont. Cal.			Cont. Cal.			Cont. Cal.		
DATE/TIME:	5-7-91 9:54			5-18-91 11:34			5-19-91 9:15								
	RF	%RSD	*	RF	%D	*	RF	%D	*	RF	%D	*	RF	%D	*
Chloromethane	1.388			.797	42.6	J	.654	52.9	J						
Bromomethane															
Vinyl Chloride															
Chloroethane	2.428			1.437	40.8	J	2.599								
Methylene Chloride	2.092	41.3	J	1.569			1.812								
Acetone															
Carbon Disulfide															
1,1-Dichloroethane															
1,1-Dichloroethene															
Trans-1,2-Dichloroethene															
Chloroform															
2-Butanone															
1,2-Dichloroethane															
1,1,1-Trichloroethane															
Carbon Tetrachloride															
Vinyl Acetate															
Bromodichloromethane															
1,2-Dichloropropane															
Trans-1,3-Dichloropropene															
Trichloroethene															
Dibromochloromethane															
1,1,2-Trichloroethane															
Benzene															
cis-1,3-Dichloropropene															
2-Chloroethylvinylether															
Bromoform															
4-Methyl-2-Pentanone															
2-Hexanone															
Tetrachloroethene															
1,1,2,2-Tetrachloroethane															
Toluene															
Chlorobenzene															
Ethylbenzene															
Styrene															
m-Xylene															
o/p-Xylene															

AFFECTED SAMPLES:

VBLKJ1	VBLKJ2
EMW88	EMW89
EMW90	EMW89DL
ES387	ES388 RE
ES388	ES389 MS
ES389	ES389 MSD
ES390	
ES391	

Reviewer's Initials/Date: KM 7/3/91

* These flags should be applied to the analytes on the sample data sheets.

CALIBRATION OUTLIERS
VOLATILE HSL COMPOUNDS

CASE/SAS # 16377 CONTRACTOR PEI

Instrument # Q	Init. Cal.			Cont. Cal.			Cont. Cal.			Cont. Cal.			Cont. Cal.		
DATE/TIME:	5-20-91 11:59			5-22-91 14:28			5-24-91 10:45								
	RF	%RSD	*	RF	%D	*	RF	%D	*	RF	%D	*	RF	%D	*
Chloromethane															
Bromomethane	2.293			2.204	2		1.690	26.3	J						
Vinyl Chloride															
Chloroethane															
Methylene Chloride															
Acetone	.301			.730	42.9	J	1.169	289.0	J						
Carbon Disulfide															
1,1-Dichloroethane															
1,1-Dichloroethene															
Trans-1,2-Dichloroethene															
Chloroform															
2-Butanone	.103			.564	447.3	J	.360	248.7	J						
1,2-Dichloroethane															
1,1,1-Trichloroethane															
Carbon Tetrachloride															
Vinyl Acetate															
Bromodichloromethane															
1,2-Dichloropropane															
Trans-1,3-Dichloropropene															
Trichloroethene															
Dibromochloromethane															
1,1,2-Trichloroethane															
Benzene															
cis-1,3-Dichloropropene															
2-Chloroethylvinylether															
Bromoform															
4-Methyl-2-Pentanone	.261			.600	128.5	J	.701	168.2	J						
2-Hexanone	.204			.468	129.3	J	.742	263.1	J						
Tetrachloroethene															
1,1,2,2-Tetrachloroethane															
Toluene															
Chlorobenzene															
Ethylbenzene															
Styrene															
m-Xylene															
o/p-Xylene															

AFFECTED SAMPLES:

VBLKJ3	VBLKJ6	VBLKJ9
EHM03	EHM01	EHM02DL
		EHM02MS
		EHM02MSD

Reviewer's Initials/Date: KM 7/03/91

* These flags should be applied to the analytes on the sample data sheets.

CALIBRATION OUTLIERS
VOLATILE MSL COMPOUNDS

CASE/SAS # 16377 CONTRACTOR PEI

Instrument # R	Init. Cal.			Cont. Cal.			Cont. Cal.			Cont. Cal.			Cont. Cal.		
DATE/TIME:	5-19-91 9:15														
	RF	%RSD	*	RF	%D	*	RF	%D	*	RF	%D	*	RF	%D	*
Chloromethane															
Bromomethane															
Vinyl Chloride															
Chloroethane															
Methylene Chloride															
Acetone	.074	53.4	J												
Carbon Disulfide															
1,1-Dichloroethane															
1,1-Dichloroethene															
Trans-1,2-Dichloroethene															
Chloroform															
2-Butanone															
1,2-Dichloroethane															
1,1,1-Trichloroethane															
Carbon Tetrachloride															
Vinyl Acetate															
Bromodichloromethane															
1,2-Dichloropropane															
Trans-1,3-Dichloropropene															
Trichloroethene															
Dibromochloromethane															
1,1,2-Trichloroethane															
Benzene															
cis-1,3-Dichloropropene															
2-Chloroethylvinylether															
Bromoform															
4-Methyl-2-Pentanone															
2-Hexanone															
Tetrachloroethene															
1,1,2,2-Tetrachloroethane															
Toluene															
Chlorobenzene															
Ethylbenzene															
Styrene															
m-Xylene															
o/p-Xylene															

AFFECTED SAMPLES:

VBLKC2
EHM04
EHW91
EHX66
EHM02

Reviewer's Initials/Date: KM 7/03/91

* These flags should be applied to the analytes on the sample data sheets.

CALIBRATION OUTLIERS
VOLATILE HSL COMPOUNDS

CASE/SAS # 16377 CONTRACTOR PEI

Instrument # R	Init. Cal.			Cont. Cal.			Cont. Cal.			Cont. Cal.			Cont. Cal.		
DATE/TIME:	6-5-91 21:20			6-6-91 17:08											
	RF	%RSD	*	RF	%D	*	RF	%D	*	RF	%D	*	RF	%D	*
Chloromethane	.300			.423	40.8	J									
Bromomethane	.736	45.4	J	.599											
Vinyl Chloride															
Chloroethane															
Methylene Chloride	1.883			2.312	22.7	J									
Acetone	.606	38.0	J	.856	41.4	J									
Carbon Disulfide															
1,1-Dichloroethane															
1,1-Dichloroethene															
Trans-1,2-Dichloroethene															
Chloroform															
2-Butanone	.240	47.3	J	.177	26.3	J									
1,2-Dichloroethane															
1,1,1-Trichloroethane															
Carbon Tetrachloride															
Vinyl Acetate															
Bromodichloromethane															
1,2-Dichloropropane															
Trans-1,3-Dichloropropene															
Trichloroethene															
Dibromochloromethane															
1,1,2-Trichloroethane															
Benzene															
cis-1,3-Dichloropropene															
2-Chloroethylvinylether															
Bromoform															
4-Methyl-2-Pentanone															
2-Hexanone															
Tetrachloroethene															
1,1,2,2-Tetrachloroethane															
Toluene															
Chlorobenzene															
Ethylbenzene															
Styrene															
m-Xylene															
o/p-Xylene															

AFFECTED SAMPLES:

VBLKD5
ES391DL

Reviewer's Initials/Date: KM 7/03/91

* These flags should be applied to the analytes on the sample data sheets.

CALIBRATION OUTLIERS
SEMIVOLATILE HSL COMPOUNDS
(Page 1)

CASE/SAS # 16377 CONTRACTOR PEI

Instrument # J	Init. Cal.			Cont. Cal.			Cont. Cal.			Cont. Cal.			Cont. Cal.		
DATE/TIME:	5-23-91 14:05			6-7-91 7:57			6-11-91 15:43			6-12-91 12:59			6-13-91 11:29		
	RF	%RSD	*	RF	%D	*	RF	%D	*	RF	%D	*	RF	%D	*
Phenol															
bis(-2-Chloroethyl)Ether		-													
2-Chlorophenol															
1,3-Dichlorobenzene															
1,4-Dichlorobenzene															
Benzyl Alcohol															
1,2-Dichlorobenzene															
2-Methylphenol															
bis(2-chloroisopropyl)Ether	.815			1.081	32.6	J	.616			.625			.705		
4-Methylphenol															
N-Nitroso-Di-n-Propylamine															
Hexachloroethane															
Nitrobenzene	.153			.167			.147			.148			.110	27.7	J
Isophorone															
2-Nitrophenol															
2,4-Dimethylphenol															
Benzoic Acid	.103			.027	73.9	J	.133	29.1	J	.077	25.0		.136	31.7	J
bis(2-Chloroethoxy)Methane															
2,4-Dichlorophenol															
1,2,4-Trichlorobenzene															
Naphthalene															
4-Chloroaniline	.237			.198			.224			.230			.169	28.7	J
Hexachlorobutadiene															
4-Chloro-3-Methylphenol															
2-Methylnaphthalene	.351	49.4	J	.454	29.3	J	.491	39.7	J	.455	29.5	J	.471	34.2	J
Hexachlorocyclopentadiene															
2,4,6-Trichlorophenol								--							
2,4,5-Trichlorophenol	.337			.353			.412			.401			.336		
2-Chloronaphthalene															
2-Nitroaniline	.205	48.7	J	.290	41.4	J	.224			.220			.188		
Dimethyl Phthalate															
Acenaphthylene															
3-Nitroaniline	.206			.213			.191			.154	25.2	J	.153	25.8	J
Acenaphthene															
2,4-Dinitrophenol	.088			.088			.095			.093			.104		
4-Nitrophenol	.099			.111			.085			.076			.072	26.3	J
Dibenzofuran															

AFFECTED SAMPLES:

SBLKx3	EMH01	SBLK49	EHW88
		EHW99	ES389
		EHW90	SBLK47
		ES387	ES390MS,MSD
		ES388	ES391
		ES390	EHW91-92
			EHW94
			EJW99
			EMN90
			EMN98MS

Reviewer Initials/Date: KM 7/3/91

* These flags should be applied to the analytes on the sample data sheets.

CALIBRATION OUTLIERS
SEMIVOLATILE HSL COMPOUNDS
Page 2

CASE/SAS # 16377 CONTRACTOR PEI

Instrument # J	Init. Cal.			Cont. Cal.			Cont. Cal.			Cont. Cal.			Cont. Cal.		
DATE/TIME:	5-23-91 14:05			6-7-91 7:37			6-11-91 15:43			6-12-91 12:58			6-13-91 11:22		
	RF	%RSD	*	RF	%D	*	RF	%D	*	RF	%D	*	RF	%D	*
2,4-Dinitrotoluene		-													
2,6-Dinitrotoluene															
Diethylphthalate															
4-Chlorophenyl-phenylether															
Fluorene															
4-Nitroaniline	.144			.152			.116			.118			.098	31.8	J
4,6-Dinitro-2-Methylphenol															
N-Nitrosodiphenylamine															
4-Bromophenyl-phenylether															
Hexachlorobenzene															
Pentachlorophenol															
Phenanthrene															
Anthracene															
Di-n-Butylphthalate	.616			.621			.576			.555			.626		
Fluoranthene															
Pyrene															
Butylbenzylphthalate															
Benzo(a)Anthracene															
bis(2-Ethylhexyl)Phthalate	.339			.372			.337			.315			.288		
Chrysene															
Di-n-Octyl Phthalate															
Benzo(b)Fluoranthene															
Benzo(k)Fluoranthene															
Benzo(a)Pyrene															
Indeno(1,2,3-cd)Pyrene	.605	44.1	J	.547			.697			.611			.475		
Dibenz(a,h)Anthracene	.629	35.1	J	.532			.614			.464	26.3	J	.471	25.1	J
Benzo(g,h,i) Perylene	.717			.592			.736			.594			.503	29.8	J

SEE PAGE 1 FOR AFFECTED SAMPLES.

* These flags should be applied to the analytes on the sample data sheets.

Reviewer's Initials/Date: KM 7/3/91

CALIBRATION OUTLIERS
SEMIVOLATILE HSL COMPOUNDS
(Page 1)

CASE/SAS # 16377 CONTRACTOR PEI

Instrument # J	Init. Cal.			Cont. Cal.			Cont. Cal.			Cont. Cal.			Cont. Cal.		
DATE/TIME:	5-23-91 14:09			6-14-91 12:31			6-16-91 11:03			6-17-91 14:25					
	RF	%RSD	*	RF	%D	*	RF	%D	*	RF	%D	*	RF	%D	*
Phenol															
bis(-2-Chloroethyl)Ether		-													
2-Chlorophenol															
1,3-Dichlorobenzene															
1,4-Dichlorobenzene															
Benzyl Alcohol															
1,2-Dichlorobenzene															
2-Methylphenol															
bis(2-chloroisopropyl)Ether	.815			.569	30.2	J	.681			.527	35.4	J			
4-Methylphenol															
N-Nitroso-Di-n-Propylamine															
Hexachloroethane															
Nitrobenzene	.153			.122			.115			.135					
Isophorone															
2-Nitrophenol															
2,4-Dimethylphenol															
Benzoic Acid	.103			.113			.116			.123					
bis(2-Chloroethoxy)Methane															
2,4-Dichlorophenol															
1,2,4-Trichlorobenzene															
Naphthalene															
4-Chloroaniline	.237			.175	25.9	J	.156	33.9	J	.196					
Hexachlorobutadiene															
4-Chloro-3-Methylphenol															
2-Methylnaphthalene	.351	49.4	J	.478	36.0	J	.471	34.2	J	.477	35.8	J			
Hexachlorocyclopentadiene															
2,4,6-Trichlorophenol								--							
2,4,5-Trichlorophenol	.337			.425	26.2	J	.389			.439	30.3	J			
2-Chloronaphthalene															
2-Nitroaniline	.205	48.7	J	.195			.211			.213					
Dimethyl Phthalate															
Acenaphthylene															
3-Nitroaniline	.206			.169			.160			.175					
Acenaphthene															
2,4-Dinitrophenol	.088			.095			.118	34.8	J	.101					
4-Nitrophenol	.098			.076			.099			.100					
Dibenzofuran															

AFFECTED SAMPLES:

	EMN98 HSD	SBLKB7	EHM03RE
		EKX66	
		EHM04	
		EHM02	
		EHM03	

Reviewer Initials/Date: KM 7/3/91

* These flags should be applied to the analytes on the sample data sheets.

CALIBRATION OUTLIERS
SEMIVOLATILE HSL COMPOUNDS
Page 2

CASE/SAS # 16377 CONTRACTOR PEI

Instrument # J	Init. Cal.			Cont. Cal.			Cont. Cal.			Cont. Cal.			Cont. Cal.		
DATE/TIME:	5-29-91 14:05			6-14-91 12:31			6-16-91 11:04			6-17-91 14:25					
	RF	%RSD	*	RF	%D	*	RF	%D	*	RF	%D	*	RF	%D	*
2,4-Dinitrotoluene															
2,6-Dinitrotoluene															
Diethylphthalate															
4-Chlorophenyl-phenylether															
Fluorene															
4-Nitroaniline	.144			.117			.116			.123					
4,6-Dinitro-2-Methylphenol															
N-Nitrosodiphenylamine															
4-Bromophenyl-phenylether															
Hexachlorobenzene															
Pentachlorophenol															
Phenanthrene															
Anthracene															
Di-n-Butylphthalate	.616			.561			.548			.456	25.9	J			
Fluoranthene															
Pyrene															
Butylbenzylphthalate															
Benzo(a)Anthracene															
bis(2-Ethylhexyl)Phthalate	.339			.358			.452	33.1	J	.280					
Chrysene															
Di-n-Octyl Phthalate															
Benzo(b)Fluoranthene															
Benzo(k)Fluoranthene															
Benzo(a)Pyrene															
Indeno(1,2,3-cd)Pyrene	.605	44.1	J	.578			.609			.510					
Dibenz(a,h)Anthracene	.629	35.1	J	.497			.618			.453	27.9	J			
Benzo(g,h,i) Perylene	.717			.529	26.3	J	.695			.534	25.5	J			

SEE PAGE 1 FOR AFFECTED SAMPLES.

* These flags should be applied to the analytes on the sample data sheets.

Reviewer's Initials/Date: KM 7/5/91

WESTON SM

DATA REPORTING QUALIFIERS – PAGE 1

For reporting results to EPA, the following result qualifiers are used. Additional flags or footnotes explaining results are encouraged. However, the definition of each flag must be explicit.

VALUE – If the result is a value greater than or equal to the Contract Required Quantitation Limit (CRQL), report the value.

U – Indicates compound was analyzed for but not detected. The sample Quantitation Limit must be corrected for dilution and for percent moisture. For example, 10 U for phenol in water if the sample final volume is the protocol-specified final volume. If a 1 to 10 dilution of extract is necessary, the reported limit is 100 U. For a soil sample, the value must also be adjusted for percent moisture. For example, if the sample had 24% moisture and a 1 to 10 dilution factor, the sample quantitation limit for phenol (330 U) would be corrected to:

$$\frac{(330\ U) \times df}{D} \qquad \text{where } D = \frac{100 - \%\ \text{moisture}}{100}$$

and df = dilution factor

$$\text{At 24\% moisture, } D = \frac{100 - 24}{100} = 0.76$$

$$\frac{(330\ U)}{.76} \times 10 = 4300\ U$$ rounded to the appropriate number of significant figures

For soil samples subjected to GPC clean-up procedures, the extract must be concentrated to 0.5 ml, and the sensitivity of the analysis is not compromised by the cleanup procedures. Therefore, the CRQL values will apply to all samples, regardless of cleanup. However if a sample extract cannot be concentratred to the protocol-specifed volume, this fact must be accounted for in reporting the sample quantitation limit.

J – Indicates an estimated value. This flag is used either when estimating a concentration for tentatively identified compounds where a 1:1 response is assumed, or when the mass spectral data indicate the presence of a compound that meets the identification criteria but the result is less than the sample quantitation limit but greater than zero. For example, if the sample quantitation limit is 10 ug/l, but a concentration of 3 ug/l is calculated, report it as 3J. The sample quantitation limit must be adjusted for dilution as dicussed for the U flag. The J flag is also applied to pesticide/Aroclor results where the pesticide/Aroclor is confirmed to be present but the concentration is less than the CRQL.

N – Indicates presumptive evidence of a compound. This flag is only used for tentatively identified compounds, where the identification is based on a mass spectral library search. It is applied to all TIC results.

DATA REPORTING QUALIFIERS - PAGE 2

P - This flag is used for a pesticide/Aroclor target analyte when there is greater than 25% difference for detected concentrations between the two GC columns (see Form X). The lower of the two values is reported on Form I and flagged with a "P".

C - This flag applies to pesticide results where the identification has been confirmed by GC/MS. If GC/MS confirmation was attempted but unsuccessful, do not apply this flag, instead use a laboratory-defined flag, discussed below.

B - This flag is used when the analyte is found in the associated blank as well as in the sample. It indicates possible/probable blank contamination and warns the data user to take appropriate action. This flag must be used for a TIC as well as for a positively identified TCL compound.

E - This flag identifies compounds whose concentrations exceed the calibration range of the GC/MS instrument for that specific analysis. This flag will not apply to pesticides/PCBs analyzed by GC/EC methods. If one or more compounds have a response greater than full scale, the sample or extract must be diluted and re-analyzed according to the specifications. All such compounds with a response greater than full scale should have the concentration flagged with an "E" on the Form I for the original analysis. If the dilution of the extract causes any compounds identified in the first analysis to be below the calibration range in the second analysis, then the results of both analyses shall be reported on separate Forms I. The Form I for the diluted sample shall have the "DL" suffix appended to the sample number.

D - This flag identifies all compounds identified in an analysis at a secondary dilution factor. If a sample or extract is re-analyzed at a higher dilution factor, as in the "E" flag above, the "DL" suffix is appended to the sample number on the Form I for the diluted sample and all concentration values reported on that Form I are flagged with the "D" flag. This flag alerts data users that any discrepancies between the concentrations reported may be due to dilution of the sample or extract.

A - This flag indicates that a TIC is a suspected aldol-condensation product.

X - Other specific flags and footnotes may be required to properly define the results. If used, they must be fully described and such description attached to the Sample Data Summary Package and the SDG Narrative. If more than one flag is required, use "Y" and "Z", as needed. If more than five qualifiers are required for a sample result, use the "X" flag to combine several flags, as needed. For instance, the "X" flag might combine the "A", "B", and "D" flags for some sample. The laboratory-defined flags are limited to the letters "X", "Y", and "Z".

TABLE 4

VOLATILE INTERNAL STANDARDS WITH CORRESPONING TCL ANALYTES ASSIGNED FOR QUANTITATION

Bromochloromethane	1,4-Difluorobenzene	Chlorobenzene-d_5
Chloromethane	2- Butanone	2-Hexanone
Bromomethane	1,1,1-Trichloroethane	4-Methyl-2-Pentanone
*Vinyl Chloride	Carbon Tetrachloride	Tetrachloroethene
Chloroethane	Vinyl Acetate	1,1,2,2-Tetrachloroethane
Methylene Chloride	Bromodichloromethane	*Toluene
Acetone	*1,2-Dichloropropane	Chlorobenzene
Carbon Disulfide	trans-1,3-Dichloropropane	*Ethylbenzene
*1,1-Dichloroethene	Trichloroethene	Styrene
1,1-Dichloroethane	Dibromochloromethane	Xylene (total)
1,2-Dichloroethene (total)	1,1,2-Trichloroethane	Bromofluorobenzene (surr)
*Chloroform	Benzene	Toluene-d_8 (surr)
1,2-Dichloroethane	cis-1,3-Dichloropropene	
1,2-Dichloroethane-d_4 (surr)	Bromoform	

(surr) = surrogate compound
*Calibration check compounds

SEMIVOLATILE INTERNAL STANDARDS WITH CORRESPONDING TCL ANALYTES ASSIGNED FOR QUANTITATION

1,4-Dichlorobenzene-d_4	Naphthalene-d_8	Acenaphthene-d_{10}	Phenanthrene-d_{10}	Chrysene-d_{12}	Perylene-d_{12}
Phenol	Nitrobenzene	Hexachlorocyclopentadiene	4,6-Dinitro-2-methylphenol	Pyrene	Di-n-octyl Phthalate
bis(2-Chloroethyl) ether	Isophorone	2,4,6-Trichlorophenol	N-nitrosodiphenylamine	Butylbenzyl Phthalate	Benzo(b)fluoranthene
2-Chlorophenol	2-Nitrophenol	2,4,5-Trichlorophenol	1,2-Diphenylhydrazine	3,3'-Dichlorobenzidine	Benzo(k)fluoranthene
1,3-Dichlorobenzene	2,4-Dimethylphenol	2-Chloronaphthalene	4-Bromophenyl Phenyl Ether	Benzo(a)anthracene	Benzo(a)pyrene
1,4-Dichlorobenzene	Benzoic acid	2-Nitroaniline	Hexachlorobenzene	bis(2-ethylhexy Phthalate	Indeno(1,2,3-cd) pyrene
Benzyl Alcohol	bis(2-Chloroethoxy)methane	Dimethyl Phthalate	Pentachlorophenol	Chrysene	Dibenz(a,h) anthracene
1,2-Dichlorobenzene	2,4-Dichlorophenol	Acenaphthylene	Phenanthrene	Terphenyl-d_{14} (surr)	Benzo(g,h,i) perylene
2-Methylphenol	1,2,4-Trichlorobenzene	3-Nitroaniline	Anthracene		
bis(2-Chloroisopropyl)ether	Naphthalene	Acenaphthene	Di-n-butyl Phthalate		
4-Methylphenol	4-Chloroaniline	2,4-Dinitrophenol	Fluoranthene		
N-nitroso-Di-n-propylamine	Hexachlorobutadiene	4-Nitrophenol			
Hexachloroethane	4-Chloro-3-methylphenol	Dibenzofuran			
2-Fluorophenol (surr)	2-Methylnaphthalene	2,4-Dinitrotoluene			
Phenol-d_6 (surr)	Nitrobenzene-d_5 (surr)	2,6-Dinitrotoluene			
		Diethyl Phthalate			
		4-Chlorophenyl-phenyl ether			
		Fluorene			
		4-Nitroaniline			
		2-Fluorobiphenyl (surr)			
		2,4,6-Tribromo Phenol (surr)			

Surr = surrogate compound

SAMPLE DELIVERY GROUP (SDG)
TRAFFIC REPORT (TR) COVER SHEET

Lab Name: PEI Associates Contract No.: 68-~~01~~ D9-0037

Lab Code: PEI Case No.: 16377 SAS No.: _____-___

Full Sample Analysis Price in Contract: $ 825.00

SDG No./First Sample in SDG: EMM 01 Sample Receipt Date: 5/8/91
(Lowest EPA Sample Number in first shipment of samples received under SDG) (MM/DD/YY)

Last Sample in SDG: EMN 98 Sample Receipt Date: 5/9/91
(Highest EPA Sample Number in last shipment of samples received under SDG) (MM/DD/YY)

EPA Sample Numbers in the SDG (listed in alphanumeric order):

1	EHM 01	11	EJW 99
2	EHM 02	12	EKF 57
3	EHM 03	13	EKX 66
4	EHM 04	14	EMN 98
5	EHW 88	15	ES 387
6	EHW 89	16	ES 388
7	EHW 90	17	ES 389
8	EHW 91	18	ES 390
9	EHW 92	19	ES 391
10	EJW 93	20	

Note: There are a maximum of 20 field samples in an SDG.

Attach Traffic Reports to this form in alphanumeric order (i.e., the order listed on this form).

Tim Sowards for Lanita Ridge
Sample Custodian

6/27/91
Date
(to replace 5/9/91)

L: Belmonte
RL: Y (N)
Leachate wells

CENTRAL REGIONAL LABORATORY SAMPLE DATA REPORT
ORGANICS/INORGANICS
THIS FORM IS TO BE USED FOR SAMPLES SENT TO CONTRACT ONLY

TOP: FOS
QAN: FIL04173A

MAY 16 1991

CASE NUMBER/SAS No. 16377 SITE NAME Metro Disposal System, Inc. LABORATORY PEI/DATAC DATE SHIPPED 5/8/91

SUPERFUND DU NUMBER TFA-102 EPA RPM or OSC (S.M.S.) (CES) (E&E FIT) CERCLIS NUMBER IL D980607204 PAGE 1 OF

ACTIVITY NUMBER ZZ

CRL LOG NUMBER	ORGANIC TRAFFIC REPORT NUMBER or SAS Packing List No.	INORGANIC TRAFFIC REPORT NUMBER	WATER OR LIQUIDS: ACID-BASE NEUTRAL CPDS ORGANIC SCAN TOX17574 UG/L	VOLATILE ORGANIC ANALYSIS ORGANIC SCAN TOX17544 UG/L	WATER POLYCHLORINATED BIPHENYLS PES 17144 UG/L	WATER CHLORINATED PESTICIDES PES17134 UG/L	TOTAL METALS IN WATER MET111 UG/L	WATER CYANIDE MIN74018 UG/L	NITRATE/NITRITE MIN7294 UG/L	AMMONIA MIN7294 UG/L	RESIDUE, FILTERABLE MIN7362 TDS MG/L	RESIDUE, NON-FILT MIN7372 TSS MG/L			SEDIMENTS or SOILS: ACID-BASE NEUTRAL CPDS ORGANIC SCAN TOX215722 UG/KG	VOLATILE ORGANIC ANALYSIS ORGANIC SCAN TOX215422 UG/KG	SEDIMENTS POLYCHLORINATED BIPHENYLS PES211422 UG/KG	SEDIMENT CHLORINATED PESTICIDES 211222 UG/KG	TOTAL METALS MET413 UG/KG	CYANIDE MIN4030 UG/KG	TOXICITY METALS UG/KG	AMMONIA MIN4925 UG/KG		
91FB40S12	ES 387	MEHA 93																						
13	ES 388	94																						
14	ES 389	95																						
15	ES 390	96																						
16	ES 391	97																						
17	EHW 88	98																						
18	EHW 89	99																						
19	EHW 90	MELP98																						
	a.c. Harvey 6-21-91																							
91FB40S20	ERF ~~EKE~~ 57	MELT 98																						
21	EHM01	MELT 99																						
91FB40D20	EHM03	MEKN02																						
91FB04R59	EHM04	MEKN03																						
	EHM02																							

CLP due date: 7/3/91
CRL due date: N/A

MAY 20 1991 a.c. Harvey / ESAT

L: Belmont
RL: Y (N)
monitoring wells

CENTRAL REGIONAL LABORATORY SAMPLE DATA REPORT
ORGANICS/INORGANICS
THIS FORM IS TO BE USED FOR SAMPLES SENT TO CONTRACT ONLY

QAN: FIL0417SA

MAY 16 1991

CASE NUMBER/SAS No. 16377 SITE NAME Metro Disposal System, Inc. (E+E FIT) LABORATORY PEI/DATAC DATE SHIPPED 5/9/91

SUPERFUND DU NUMBER IFA-102 EPA RPM or OSC (S.M.S.) (CES) CERCLIS NUMBER IL D980607204 PAGE 2

ACTIVITY NUMBER ZZ

CRL LOG NUMBER	ORGANIC TRAFFIC REPORT NUMBER or SAS Packing List No.	INORGANIC TRAFFIC REPORT NUMBER	WATER OR LIQUIDS: ACID-BASE NEUTRAL CPDS ORGANIC SCAN TOX17574 UG/L	VOLATILE ORGANIC ANALYSIS ORGANIC SCAN TOX17544 UG/L	WATER POLYCHLORINATED BIPHENYLS PES17144 UG/L	WATER CHLORINATED PESTICIDES PES17134 UG/L	TOTAL METALS IN WATER MET111 UG/L	WATER CYANIDE MIN74810 UG/L	NITRATE/NITRITE MIN7294 UG/L	AMMONIA MIN7294 UG/L	RESIDUE, PURGEABLE MIN7262 TSS MG/L	RESIDUE, NON-PLT MIN7372 TSS MG/L			SEDIMENTS or SOILS: ACID-BASE NEUTRAL CPDS ORGANIC SCAN TOX215722 UG/KG	VOLATILE ORGANIC ANALYSIS ORGANIC SCAN TOX216422 UG/KG	SEDIMENTS POLYCHLORINATED BIPHENYLS PES211422 UG/KG	SEDIMENT CHLORINATED PESTICIDES 211322 UG/KG	TOTAL METALS MET413 UG/KG	CYANIDE MIN4030 UG/KG	EP TOXICITY METALS UG/KG	AMMONIA MIN42925 UG/KG		
91FB40S22	EKX66	MELP99																						
23	EMN98	MELT91																						
24	EHW91	MELT92																						
25	EHW92	MELT93																						
91FB40D22	EHW94	MELT96																						
91FB04R60	EJW99	MELT97	↓	↓	↓	↓	↓	↓																

CLP due date: 7/3/91
CRL due date: N/A

MAY 20 1991 A. C. Harvey / ESAT

EPA

United States Environmental Protection Agency
Contract Laboratory Program Sample Management Office
PO Box 818 Alexandria, VA 22313
703-557-2490 FTS 557-2490

XI-05

Organic Traffic Report
(For CLP Use Only)

Case Number: 16377
SAS No. (if applicable): N/A

1. Sample Description *(Enter in Column A)*
1. Surface Water
2. Ground Water
3. Leachate
4. Rinsate
5. Soil/Sediment
6. Oil (SAS)
7. Waste (SAS)
8. Other (SAS) *(Specify)*

2. Region Number: V
Sampling Co.: FIT
Sampler (Name): Tim Rodriguez
3. Ship To: PEI, 11499 Chester Rd., Cincinnati, OH 45246, Attn: Jon Sanderman

4. Date Shipped: 5/9/91
Airbill Number: 92452 6781
Carrier: F

Triple volume required for matrix spike/duplicate aqueous sample.
Ship medium and high concentration samples in paint cans.
See reverse for additional instructions.

5. Date Received
Received by
Laboratory Contract Number
Unit Price
6. Transfer to
Date Received
Received by
Contract Number
Price

CLP Sample Number *(From labels)*	(A) Sample Description *(From box 1)*	(B) Concentration L=low M=med H=high	(C) RAS Analysis VOA	BNA	Pest/PCB	(D) Special Handling	(E) Station Location	(F) Date/Time of Sample Collection	(G) Corresponding CLP Inorganic Sample Number	(H) Sample Condition on Receipt	(I) High Conc. Phases Solid	Water—MIS Liq.	Non Water—MIS Liq.
EKX62	2	L	X	X	X		MW1	5/9/91	MELP99	Samples received			
EMN88	2	L	X	X	X	MSD	MW2	5/9/91	MELT91	cold and in good			
EHW91	2	L	X	X	X		MW3	5/9/91	MELT92	condition. Chain			
EHW92	2	L	X	X	X		MW4	5/9/91	MELT93	of custody seals			
~~EHE44~~	~~2~~	~~L~~		~~X~~	~~X~~		~~MW5~~		~~MELT94~~	on all both			
~~EHE45~~	~~2~~	~~L~~		~~X~~	~~X~~		~~MW6~~		~~MELT95~~	the shipping			
EJW94	2	L	X	X	X		Dup	5/9/91	MELT96	coolers and sample			
EJW99	4	L	X	X	X	Blank	Blank	5/9/91	MELT97	container are			
										intact. 5/11/91			
										Nicholas W.			
										Plummer			

Shipment (N)/Incomplete

EPA Form 9110-2 (8-88) Replaces EPA Form 2075-7 which may be used.

XI-05-070 03A

United States Environmental Protection Agency
Contract Laboratory Program Sample Management Office
PO Box 818 Alexandria, VA 22313
703-557-2490 FTS 557-2490

Organic Traffic Report
(For CLP Use Only)

Case Number: 11377
SAS No. (if applicable): N/A

1. Sample Description (Enter in Column A)
1. Surface Water
2. Ground Water
3. Leachate
4. Rinsate
5. Soil/Sediment
6. Oil (SAS)
7. Waste (SAS)
8. Other (SAS) (Specify)

2. Region Number: V
Sampling Co.: FIT
Sampler (Name): Tim Rodriguez
3. Ship To: PEI
11499 Chester Rd.
Cincinnati, OH 45246
Attn: Jim Sonderman

4. Date Shipped: 5/8/91
Airbill Number: 9795756746
Carrier: F

Triple volume required for matrix spike/duplicate aqueous sample.
Ship medium and high concentration samples in paint cans.
See reverse for additional instructions.

5. Date Received: Received by:
Laboratory Contract Number: Unit Price:
6. Transfer to: Date Received:
Received by:
Contract Number: Price:

CLP Sample Number (From labels)	(A) Sample Description (From box 1)	(B) Concentration L=low M=med H=high	(C) RAS Analysis VOA	BNA	Pest/PCB	(D) Special Handling	(E) Station Location	(F) Date/Time of Sample Collection	(G) Corresponding CLP Inorganic Sample Number	(H) Sample Condition on Receipt	(I) High Conc. Phases (Check below) Sol-Id	Water—MIS Liq.	Non Water—MIS Liq.
ES387	5	L	N	X	X		S1	5/8/91	MEHA93				
ES388	5	L	N	X	X		S2	5/8/91	MEHA94				
ES389	5	L	N	X	X		S3	5/8/91	MEHA95				
ES390	5	L	N	X	X		S4	5/8/91	MEHA96				
ES391	5	L	N	X	X		S5	5/8/91	MEHA97				
EHW88	5	L	N	X	X		S6	5/8/91	MEHA98				
EHW89	5	L	N	X	X		S7	5/8/91	MEHA99				
EHW90	5	L	N	X	X		S8		MELP98				
EHF57		M-L	N	X	X		[illegible]	[illegible]	[illegible]				
EHW91		M-L	N	X	X		[illegible]	[illegible]	MELT99				
EHW92		M-L	N	X	X		[illegible]	[illegible]	[illegible]				
EHW93		L	N	X	X	Blank	Blank	[illegible]	[illegible]				
EHW94		M-L	N	X	X	[illegible]	[illegible]	[illegible]	—				
						Incorrect	15/10-10	+ (Empty)	Lt.				

EPA Form 9110.2 (8-88) Replaces EPA Form 2075-2 which is obsolete.

In Reference to Case No(s):

16377

Contract Laboratory Program
REGIONAL/LABORATORY COMMUNICATION SYSTEM

Telephone Record Log

Date of Call: 5-29-91

Laboratory Name: IT-CINCINNATI

Lab Contact: JENNEL

Region: 5

Regional Contact: PATRICK CHURILLA

Call Initiated By: ✓ Laboratory ____ Region

In reference to data for the following sample number(s):

SEMIVOLATILE AND PESTICIDE FRACTIONS FOR SAMPLES EHM03 AND EKF57

Summary of Questions/Issues Discussed:

THESE SAMPLES COULD NOT BE CONCENTRATED TO THE CONTRACTUALLY REQUIRED FINAL VOLUMES. THE LAB WANTS TO KNOW IF THE SAMPLES SHOULD BE [illegible] USING SMALLER [illegible] OF THE [illegible] FINAL [illegible] SHOULD BE DILUTED [illegible]

Summary of Resolution:

[illegible]

Signature [illegible] Date [illegible]

Distribution: (1) Lab Copy, (2) Region Copy, (3) SMO Copy

2A
WATER VOLATILE SURROGATE RECOVERY

Lab Name: PEI Contract: 68-D9-0037

Lab Code: PEI Case No.: 16377 SAS No.: SDG No.: EHM01

	EPA SAMPLE NO.	S1 (TOL)#	S2 (BFB)#	S3 (DCE)#	OTHER	TOT OUT
1	VBLKJ3	103	104	98		0
2	EHM03	107	103	103		0
3	VBLKJ6	103	103	94		0
4	EHM01	102	104	100		0
5	VBLKJ9	102	100	92		0
6	EHM02 RE	105	109	92		0
7	EHM02MS	104	105	92		0
8	EHM02MSD	103	108	97		0
9						
10						
11						
12						
13						
14						
15						
16						
17						
18						
19						
20						
21						
22						
23						
24						
25						
26						
27						
28						
29						
30						

RECEIVED
JUN 21 1991
US EPA CENTRAL REGIONAL LAB.
536 S. CLARK ST.
CHICAGO, ILLINOIS 60605

		QC LIMITS
S1 (TOL)	= TOLUENE-D8	(88-110)
S2 (BFB)	= BROMOFLUOROBENZENE	(86-115)
S3 (DCE)	= 1,2-DICHLOROETHANE-D4	(76-114)

Column to be used to flag recovery values

* Values outside of contract required QC limits

D Surrogates diluted out

FORM II VOA-1 1/87 Rev.

2A
WATER VOLATILE SURROGATE RECOVERY

0012

Lab Name: PEI Contract: 68-D9-0037

Lab Code: PEI Case No.: 16377 SAS No.: SDG No.: EHM01

	EPA SAMPLE NO.	S1 (TOL) #	S2 (BFB) #	S3 (DCE) #	OTHER	TOT OUT
1	VBLKN5	101	99	97		0
2	EJW99	109	101	98		0
3	EHW92	102	102	99		0
4	EJW94	104	101	100		0
5	EMN98	106	102	102		0
6	EMN98MS	100	96	98		0
7	EMN98MSD	103	97	97		0
8						
9						
10						
11						
12						
13						
14						
15						
16						
17						
18						
19						
20						
21						
22						
23						
24						
25						
26						
27						
28						
29						
30						

		QC LIMITS
S1 (TOL)	= TOLUENE-D8	(88-110)
S2 (BFB)	= BROMOFLUOROBENZENE	(86-115)
S3 (DCE)	= 1,2-DICHLOROETHANE-D4	(76-114)

Column to be used to flag recovery values

* Values outside of contract required QC limits

D Surrogates diluted out

FORM II VOA-1 1/87 Rev.

2B
SOIL VOLATILE SURROGATE RECOVERY

0013

Lab Name: PEI Contract: 68-D9-0037

Lab Code: PEI Case No.: 16377 SAS No.: SDG No.: EHM01

Level:(low/med) LOW

	EPA SAMPLE NO.	S1 (TOL) #	S2 (BFB) #	S3 (DCE) #	OTHER	TOT OUT
1	VBLKJ1	98	97	97		0
2	EHW88	103	88	94		0
3	EHW90	102	90	98		0
4	ES387	105	90	98		0
5	ES388	119 *	91	101		1
6	ES389	113	90	98		0
7	ES390	100	92	99		0
8	ES391	88	80	114		0
9	VBLKJ2	94	91	93		0
10	EHW89	113	76	102		0
11	EHW89 DL	100	82	96		0
12	ES388 RE	120 *	76	104		1
13	ES389MS	118 *	86	108		1
14	ES389MSD	117	72 *	108		1
15						
16						
17						
18						
19						
20						
21						
22						
23						
24						
25						
26						
27						
28						
29						
30						

	QC LIMITS
S1 (TOL) = TOLUENE-D8	(81-117)
S2 (BFB) = BROMOFLUOROBENZENE	(74-121)
S3 (DCE) = 1,2-DICHLOROETHANE-D4	(70-121)

Column to be used to flag recovery values

* Values outside of contract required QC limits

D Surrogates diluted out

FORM II VOA-2 1/87 Rev.

2B
SOIL VOLATILE SURROGATE RECOVERY

Lab Name: PEI Contract: 68-D9-0037

Lab Code: PEI Case No.: 16377 SAS No.: SDG No.: EHM01

Level:(low/med) MED

	EPA SAMPLE NO.	S1 (TOL)#	S2 (BFB)#	S3 (DCE)#	OTHER	TOT OUT
1	VBLKD5	99	103	90		0
2	ES391 DL	109	96	91		0
3						
4						
5						
6						
7						
8						
9						
10						
11						
12						
13						
14						
15						
16						
17						
18						
19						
20						
21						
22						
23						
24						
25						
26						
27						
28						
29						
30						

	QC LIMITS
S1 (TOL) = TOLUENE-D8	(81-117)
S2 (BFB) = BROMOFLUOROBENZENE	(74-121)
S3 (DCE) = 1,2-DICHLOROETHANE-D4	(70-121)

Column to be used to flag recovery values

* Values outside of contract required QC limits

D Surrogates diluted out

2C

WATER SEMIVOLATILE SURROGATE RECOVERY

0525

Lab Name: PEI Contract: 68-D9-0037

Lab Code: PEI Case No.: 16377 SAS No.: SDG No.: EHM01

	EPA SAMPLE NO.	S1 (NBZ) #	S2 (FBP) #	S3 (TPH) #	S4 (PHL) #	S5 (2FP) #	S6 (TBP) #	OTHER	TOT OUT
1	SBLKX3	57	70	74	60	50	50		0
2	EMH01	62	62	12 *	50	57	56		1
3	EHW91	47	86	37	19	16 *	30		1
4	EHW92	49	79	54	23	29	56		0
5	EHW94	54	87	12 *	40	38	35		1
6	EJW99	33 *	50	74	33	43	38		1
7	EMN98	48	76	1 *	29	26	46		1
8	EMN98MS	33 *	70	4 *	44	43	54		2
9	EMN98MSD	53	50	5 *	42	41	43		1
10	SBLKB7	62	74	68	17	28	60		0
11	EKX66	68	62	65	15	27	53		0
12	EHM04	56	67	64	26	43	73		0
13	EHM02	52	70	61	19	28	46		0
14	EHM03	12 *	29 *	16 *	45	52	52		3
15	EHM03 RE	12 *	23 *	16 *	46	61	40		3
16									
17									
18									
19									
20									
21									
22									
23									
24									
25									
26									
27									
28									
29									
30									

		QC LIMITS
S1 (NBZ)	= Nitrobenzene-d5	(35-114)
S2 (FBP)	= 2-Fluorobiphenyl	(43-116)
S3 (TPH)	= Terphenyl-d14	(33-141)
S4 (PHL)	= Phenol-d6	(10- 94)
S5 (2FP)	= 2-Fluorophenol	(21-100)
S6 (TBP)	= 2,4,6-Tribromophenol	(10-123)

Column to be used to flag recovery values

* Values outside of contract required QC limits

D Surrogates diluted out

FORM II SV-1 1/87 Rev.

2D
SOIL SEMIVOLATILE SURROGATE RECOVERY

0526

Lab Name: PEI Contract: 68-D9-0037

Lab Code: PEI Case No.: 16377 SAS No.: SDG No.: EHM01

Level:(low/med) LOW

	EPA SAMPLE NO.	S1 (NBZ)#	S2 (FBP)#	S3 (TPH)#	S4 (PHL)#	S5 (2FP)#	S6 (TBP)#	OTHER	TOT OUT
1	SBLKY9	62	83	59	54	52	42		0
2	EHW89	63	88	56	56	67	55		0
3	EHW90	72	91	77	61	67	53		0
4	ES387	63	97	84	64	66	61		0
5	ES388	54	77	58	55	65	51		0
6	ES390	53	83	71	53	59	52		0
7	EHW88	57	76	70	39	40	57		0
8	ES389	59	85	62	39	37	57		0
9	SBLKY7	65	81	75	46	52	51		0
10	ES390MS	65	81	63	21 *	48	62		1
11	ES390MSD	67	97	85	51	50	69		0
12	ES391	64	94	85	46	51	67		0
13									
14									
15									
16									
17									
18									
19									
20									
21									
22									
23									
24									
25									
26									
27									
28									
29									
30									

		QC LIMITS
S1 (NBZ)	= Nitrobenzene-d5	(23-120)
S2 (FBP)	= 2-Fluorobiphenyl	(30-115)
S3 (TPH)	= Terphenyl-d14	(18-137)
S4 (PHL)	= Phenol-d6	(24-113)
S5 (2FP)	= 2-Fluorophenol	(25-121)
S6 (TBP)	= 2,4,6-Tribromophenol	(19-122)

Column to be used to flag recovery values

* Values outside of contract required QC limits

D Surrogates diluted out

2E
WATER PESTICIDE SURROGATE RECOVERY

2001

Lab Name: PEI Contract: 68-D9-0037

Lab Code: PEI Case No.: 16377 SAS No.: SDG No.: EHM01

	EPA SAMPLE NO.	S1 (DBC)#		OTHER
1	PBLKX5	103		
2	EHM01	25		
3	EHM02	24		
4	EHM04	48		
5	EKX66	11	*	
6	EHW91	46		
7	EHW92	81		
8	EJW94	27		
9	EJW99	93		
10	EMN98	55		
11	EMN98MS	55		
12	EMN98MSD	38		
13	EHM03	0	*	
14	EKF57	0	*	
15				
16				
17				
18				
19				
20				
21				
22				
23				
24				
25				
26				
27				
28				
29				
30				

ADVISORY
QC LIMITS
(24-154)

S1 (DBC) = DBC

Column to be used to flag recovery values

* Values outside of contract required QC limits

D Surrogates diluted out

FORM II PEST-1 1/87 Rev.

2F

SOIL PESTICIDE SURROGATE RECOVERY

2002

Lab Name: PEI Contract: 68-D9-0037

Lab Code: PEI Case No.: 16377 SAS No.: SDG No.: EHM01

Level:(low/med) LOW

	EPA SAMPLE NO.	S1 (DBC)#	OTHER
1	ES390MS	141	
2	EHW88	119	
3	EHW90	146	
4	ES387	121	
5	ES388	125	
6	ES389	125	
7	ES391	119	
8	PBLKY8	137	
9	ES390	128	
10	ES390MSD	125	
11	EHW89	149	
12	PBLKY7	148	
13			
14			
15			
16			
17			
18			
19			
20			
21			
22			
23			
24			
25			
26			
27			
28			
29			
30			

ADVISORY
QC LIMITS
(20-150)

S1 (DBC) = DBC

Column to be used to flag recovery values

* Values outside of contract required QC limits

D Surrogates diluted out

FORM II PEST-2 1/87 Rev.

3A
WATER VOLATILE MATRIX SPIKE/MATRIX SPIKE DUPLICATE RECOVERY

Lab Name: PEI Contract: 68-D9-0037

Lab Code: PEI Case No.: 16377 SAS No.: SDG No.: EHM01

Matrix Spike - EPA Sample No.: EHM02

COMPOUND	SPIKE ADDED (UG/L)	SAMPLE CONCENTRATION (UG/L)	MS CONCENTRATION (UG/L)	MS % REC #	QC LIMITS REC.
1,1-DICHLOROETHENE	500.	0.	385.	77	61-145
TRICHLOROETHENE	500.	0.	452.	90	71-120
BENZENE	500.	69.	488.	84	76-127
TOLUENE	500.	121.	578.	91	76-125
CHLOROBENZENE	500.	320.	535.	43 *	75-130

COMPOUND	SPIKE ADDED (UG/L)	MSD CONCENTRATION (UG/L)	MSD % REC #	% RPD #	QC LIMITS RPD	QC LIMITS REC.
1,1-DICHLOROETHENE	500.	378.	76	2	14	61-145
TRICHLOROETHENE	500.	419.	84	8	14	71-120
BENZENE	500.	455.	77	8	11	76-127
TOLUENE	500.	540.	84	9	13	76-125
CHLOROBENZENE	500.	488.	34 *	24 *	14	75-130

Column to be used to flag recovery and RPD values with an asterisk

* Values outside of QC limits

RPD: 1 out of 5 outside limits
Spike Recovery: 2 out of 10 outside limits

COMMENTS:

3A
WATER VOLATILE MATRIX SPIKE/MATRIX SPIKE DUPLICATE RECOVERY

Lab Name: PEI Contract: 68-D9-0037

Lab Code: PEI Case No.: 16377 SAS No.: SDG No.: EHM01

Matrix Spike - EPA Sample No.: EMN98

COMPOUND	SPIKE ADDED (UG/L)	SAMPLE CONCENTRATION (UG/L)	MS CONCENTRATION (UG/L)	MS % REC #	QC LIMITS REC.
1,1-DICHLOROETHENE	50.	0.	48.	97	61-145
TRICHLOROETHENE	50.	0.	49.	98	71-120
BENZENE	50.	10.	58.	96	76-127
TOLUENE	50.	0.	49.	99	76-125
CHLOROBENZENE	50.	115.	161.	92	75-130

COMPOUND	SPIKE ADDED (UG/L)	MSD CONCENTRATION (UG/L)	MSD % REC #	% RPD #	QC LIMITS RPD	QC LIMITS REC.
1,1-DICHLOROETHENE	50.	49.	98	1	14	61-145
TRICHLOROETHENE	50.	51.	102	4	14	71-120
BENZENE	50.	60.	100	4	11	76-127
TOLUENE	50.	52.	103	4	13	76-125
CHLOROBENZENE	50.	163.	96	5	14	75-130

Column to be used to flag recovery and RPD values with an asterisk

* Values outside of QC limits

RPD: 0 out of 5 outside limits
Spike Recovery: 0 out of 10 outside limits

COMMENTS:

3B

SOIL VOLATILE MATRIX SPIKE/MATRIX SPIKE DUPLICATE RECOVERY

Lab Name: PEI Contract: 68-D9-0037

Lab Code: PEI Case No.: 16377 SAS No.: SDG No.: EHM01

Matrix Spike - EPA Sample No.: ES389 Level:(low/med) LOW

COMPOUND	SPIKE ADDED (UG/KG)	SAMPLE CONCENTRATION (UG/KG)	MS CONCENTRATION (UG/KG)	MS % REC #	QC LIMITS REC.
1,1-DICHLOROETHENE	62.	0.	56.	90	59-172
TRICHLOROETHENE	62.	0.	55.	89	62-137
BENZENE	62.	0.	58.	93	66-142
TOLUENE	62.	0.	70.	112	59-139
CHLOROBENZENE	62.	0.	77.	124	60-133

COMPOUND	SPIKE ADDED (UG/KG)	MSD CONCENTRATION (UG/KG)	MSD % REC #	% RPD #	QC LIMITS RPD	QC LIMITS REC.
1,1-DICHLOROETHENE	62.	57.	93	3	22	59-172
TRICHLOROETHENE	62.	55.	89	0	22	62-137
BENZENE	62.	60.	96	3	21	66-142
TOLUENE	62.	74.	120	7	21	59-139
CHLOROBENZENE	62.	81.	130	4	21	60-133

Column to be used to flag recovery and RPD values with an asterisk

* Values outside of QC limits

RPD: 0 out of 5 outside limits
Spike Recovery: 0 out of 10 outside limits

COMMENTS:

3D

SOIL SEMIVOLATILE MATRIX SPIKE/MATRIX SPIKE DUPLICATE RECOVERY

0527

Lab Name: PEI Contract: 68-D9-0037

Lab Code: PEI Case No.: 16377 SAS No.: SDG No.: EHM01

Matrix Spike - EPA Sample No.: ES390 Level:(low/med) LOW

COMPOUND	SPIKE ADDED (UG/KG)	SAMPLE CONCENTRATION (UG/KG)	MS CONCENTRATION (UG/KG)	MS % REC	#	QC LIMITS REC.
Phenol	20247.	0.	12067.	60		26- 90
2-Chlorophenol	20247.	0.	12047.	60		25-102
1,4-Dichlorobenzene	10124.	0.	6370.	63		28-104
N-Nitroso-di-n-prop.(1)	10124.	0.	3952.	39	*	41-126
1,2,4-Trichlorobenzene	10124.	0.	6290.	62		38-107
4-Chloro-3-methylphenol	20247.	0.	12249.	60		26-103
Acenaphthene	10124.	0.	7188.	71		31-137
4-Nitrophenol	20247.	0.	17642.	87		11-114
2,4-Dinitrotoluene	10124.	0.	7921.	78		28- 89
Pentachlorophenol	20247.	0.	13023.	64		17-109
Pyrene	10124.	0.	7544.	75		35-142

COMPOUND	SPIKE ADDED (UG/KG)	MSD CONCENTRATION (UG/KG)	MSD % REC	#	% RPD	#	QC LIMITS RPD	REC.
Phenol	20234.	14060.	69		15		35	26- 90
2-Chlorophenol	20234.	13953.	69		15		50	25-102
1,4-Dichlorobenzene	10117.	6141.	61		4		27	28-104
N-Nitroso-di-n-prop.(1)	10117.	4409.	44		11		38	41-126
1,2,4-Trichlorobenzene	10117.	6526.	65		4		23	38-107
4-Chloro-3-methylphenol	20234.	12038.	59		2		33	26-103
Acenaphthene	10117.	7299.	72		2		19	31-137
4-Nitrophenol	20234.	19085.	94		8		50	11-114
2,4-Dinitrotoluene	10117.	8004.	79		1		47	28- 89
Pentachlorophenol	20234.	13325.	66		2		47	17-109
Pyrene	10117.	9072.	90		18		36	35-142

(1) N-Nitroso-di-n-propylamine

Column to be used to flag recovery and RPD values with an asterisk

* Values outside of QC limits

RPD: 0 out of 11 outside limits
Spike Recovery: 1 out of 22 outside limits

COMMENTS:

3C

WATER SEMIVOLATILE MATRIX SPIKE/MATRIX SPIKE DUPLICATE RECOVERY

Lab Name: PEI Contract: 68-D9-0037

Lab Code: PEI Case No.: 16377 SAS No.: SDG No.: EHM01

Matrix Spike - EPA Sample No.: EMN98

COMPOUND	SPIKE ADDED (UG/L)	SAMPLE CONCENTRATION (UG/L)	MS CONCENTRATION (UG/L)	MS % REC #	QC LIMITS REC.
Phenol	400.	0.	311.	78	12- 89
2-Chlorophenol	400.	0.	280.	70	27-123
1,4-Dichlorobenzene	200.	0.	158.	79	36- 97
N-Nitroso-di-n-prop. (1)	200.	0.	101.	51	41-116
1,2,4-Trichlorobenzene	200.	0.	104.	52	39- 98
4-Chloro-3-methylphenol	400.	0.	247.	62	23- 97
Acenaphthene	200.	0.	133.	67	46-118
4-Nitrophenol	400.	0.	328.	82 *	10- 80
2,4-Dinitrotoluene	200.	0.	150.	75	24- 96
Pentachlorophenol	400.	0.	162.	41	9-103
Pyrene	200.	0.	62.	31	26-127

COMPOUND	SPIKE ADDED (UG/L)	MSD CONCENTRATION (UG/L)	MSD % REC #	% RPD #	QC LIMITS RPD	QC LIMITS REC.
Phenol	400.	243.	61	25	42	12- 89
2-Chlorophenol	400.	217.	54	25	40	27-123
1,4-Dichlorobenzene	200.	137.	68	15	28	36- 97
N-Nitroso-di-n-prop. (1)	200.	117.	58	14	38	41-116
1,2,4-Trichlorobenzene	200.	132.	66	23	28	39- 98
4-Chloro-3-methylphenol	400.	364.	91	39	42	23- 97
Acenaphthene	200.	133.	66	0	31	46-118
4-Nitrophenol	400.	402.	100 *	20	50	10- 80
2,4-Dinitrotoluene	200.	150.	75	0	38	24- 96
Pentachlorophenol	400.	148.	37	9	50	9-103
Pyrene	200.	77.	39	21	31	26-127

(1) N-Nitroso-di-n-propylamine

Column to be used to flag recovery and RPD values with an asterisk

* Values outside of QC limits

RPD: 0 out of 11 outside limits
Spike Recovery: 2 out of 22 outside limits

COMMENTS:

3E

WATER PESTICIDE MATRIX SPIKE/MATRIX SPIKE DUPLICATE RECOVERY

Lab Name: PEI Contract: 68-D9-0037

Lab Code: PEI Case No.: 16377 SAS No.: SDG No.: EHM01

Matrix Spike - EPA Sample No.: EMN98

COMPOUND	SPIKE ADDED (UG/L)	SAMPLE CONCENTRATION (UG/L)	MS CONCENTRATION (UG/L)	MS % REC	#	QC LIMITS REC.
gamma-BHC	.40	.00	.56	140	*	56-123
Heptachlor	.40	.00	.35	88		40-131
Aldrin	.40	.00	.13	33	*	40-120
Dieldrin	1.00	.00	.85	85		52-126
Endrin	1.00	.00	1.06	106		56-121
4,4'-DDT	1.00	.00	.16	16	*	38-127

COMPOUND	SPIKE ADDED (UG/L)	MSD CONCENTRATION (UG/L)	MSD % REC	#	% RPD	#	QC LIMITS RPD	REC.
gamma-BHC	.40	.61	153	*	9		15	56-123
Heptachlor	.40	.39	97		9		20	40-131
Aldrin	.40	.13	34	*	3		22	40-120
Dieldrin	1.00	.90	90		5		18	52-126
Endrin	1.00	1.06	106		0		21	56-121
4,4'-DDT	1.00	.11	11	*	30	*	27	38-127

Column to be used to flag recovery and RPD values with an asterisk

* Values outside of QC limits

RPD: 1 out of 6 outside limits
Spike Recovery: 6 out of 12 outside limits

COMMENTS:

3F

SOIL PESTICIDE MATRIX SPIKE/MATRIX SPIKE DUPLICATE RECOVERY

Lab Name: PEI Contract: 68-D9-0037

Lab Code: PEI Case No.: 16377 SAS No.: SDG No.: EHM01

Matrix Spike - EPA Sample No.: ES390 Level:(low/med) LOW

COMPOUND	SPIKE ADDED (UG/KG)	SAMPLE CONCENTRATION (UG/KG)	MS CONCENTRATION (UG/KG)	MS % REC #	QC LIMITS REC.
gamma-BHC	80.99	.00	65.37	81	46-127
Heptachlor	80.99	.00	98.40	121	35-130
Aldrin	80.99	.00	68.58	85	34-132
Dieldrin	202.48	.00	165.71	82	31-134
Endrin	202.48	.00	216.45	107	42-139
4,4'-DDT	202.48	.00	193.92	96	23-134

COMPOUND	SPIKE ADDED (UG/KG)	MSD CONCENTRATION (UG/KG)	MSD % REC #	% RPD #	QC LIMITS RPD	QC LIMITS REC.
gamma-BHC	80.93	57.43	71	13	50	46-127
Heptachlor	80.93	89.94	111	9	31	35-130
Aldrin	80.93	62.70	77	9	43	34-132
Dieldrin	202.34	146.19	72	12	38	31-134
Endrin	202.34	160.06	79	30	45	42-139
4,4'-DDT	202.34	153.30	76	23	50	23-134

Column to be used to flag recovery and RPD values with an asterisk

* Values outside of QC limits

RPD: 0 out of 6 outside limits
Spike Recovery: 0 out of 12 outside limits

COMMENTS:

4A
VOLATILE METHOD BLANK SUMMARY

0018

Lab Name: PEI Contract: 68-D9-0037

Lab Code: PEI Case No.: 16377 SAS No.: SDG No.: EHM01

Lab File ID: VBLKN5 Lab Sample ID: VBLKN5

Date Analyzed: 5/14/91 Time Analyzed: 22:51

Matrix: (soil/water) WATER Level:(low/med) LOW

Instrument ID: ____Q

THIS METHOD BLANK APPLIES TO THE FOLLOWING SAMPLES, MS AND MSD:

	EPA SAMPLE NO.	LAB SAMPLE ID	LAB FILE ID	TIME ANALYZED
1	EJW99	X1-05-070-18B	EJW99	23:41
2	EHW92	X1-05-070-16B	EHW92	0:37
3	EJW94	X1-05-070-17B	EJW94	1:19
4	EMN98	X1-05-070-19B	EMN98	2:01
5	EMN98MS	X1-05-070-19B	EMN98MS	2:44
6	EMN98MSD	X1-05-070-19B	EMN98MSD	3:26
7				
8				
9				
10				
11				
12				
13				
14				
15				
16				
17				
18				
19				
20				
21				
22				
23				
24				
25				
26				
27				
28				
29				
30				

COMMENTS:

4A
VOLATILE METHOD BLANK SUMMARY

Lab Name: PEI Contract: 68-D9-0037

Lab Code: PEI Case No.: 16377 SAS No.: SDG No.: EHM01

Lab File ID: VBLKJ1 Lab Sample ID: VBLKJ1

Date Analyzed: 5/18/91 Time Analyzed: 12:36

Matrix: (soil/water) SOIL Level:(low/med) LOW

Instrument ID: ____Q

THIS METHOD BLANK APPLIES TO THE FOLLOWING SAMPLES, MS AND MSD:

	EPA SAMPLE NO.	LAB SAMPLE ID	LAB FILE ID	TIME ANALYZED
1	EHW88	X1-05-070-05B	EHW88	13:47
2	EHW90	X1-05-070-07B	EHW90	15:15
3	ES387	X1-05-070-09B	ES387	15:59
4	ES388	X1-05-070-10B	ES388	16:41
5	ES389	X1-05-070-11B	ES389	17:25
6	ES390	X1-05-070-12B	ES390	18:08
7	ES391	X1-05-070-13B	ES391	18:52
8				
9				
10				
11				
12				
13				
14				
15				
16				
17				
18				
19				
20				
21				
22				
23				
24				
25				
26				
27				
28				
29				
30				

COMMENTS:

4A
VOLATILE METHOD BLANK SUMMARY

Lab Name: PEI Contract: 68-D9-0037

Lab Code: PEI Case No.: 16377 SAS No.: SDG No.: EHM01

Lab File ID: VBLKJ2 Lab Sample ID: VBLKJ2

Date Analyzed: 5/19/91 Time Analyzed: 10:11

Matrix: (soil/water) SOIL Level:(low/med) LOW

Instrument ID: ____Q

THIS METHOD BLANK APPLIES TO THE FOLLOWING SAMPLES, MS AND MSD:

	EPA SAMPLE NO.	LAB SAMPLE ID	LAB FILE ID	TIME ANALYZED
1	EHW89	X1-05-070-06B	EHW89RE	14:51
2	EHW89 DL	X1-05-070-06B	EHW89DL	15:34
3	ES388 RE	X1-05-070-10B	ES388RE	16:17
4	ES389MS	X1-05-070-11B	ES389MS	17:01
5	ES389MSD	X1-05-070-11B	ES389MSD	17:44
6				
7				
8				
9				
10				
11				
12				
13				
14				
15				
16				
17				
18				
19				
20				
21				
22				
23				
24				
25				
26				
27				
28				
29				
30				

COMMENTS:

4A
VOLATILE METHOD BLANK SUMMARY

0021

Lab Name: PEI Contract: 68-D9-0037

Lab Code: PEI Case No.: 16377 SAS No.: SDG No.: EHM01

Lab File ID: VBLKJ3 Lab Sample ID: VBLKJ3

Date Analyzed: 5/20/91 Time Analyzed: 18:07

Matrix: (soil/water) WATER Level:(low/med) LOW

Instrument ID: ____Q

THIS METHOD BLANK APPLIES TO THE FOLLOWING SAMPLES, MS AND MSD:

	EPA SAMPLE NO.	LAB SAMPLE ID	LAB FILE ID	TIME ANALYZED
1	EHM03	X1-05-070-03B	EHM03	21:16
2				
3				
4				
5				
6				
7				
8				
9				
10				
11				
12				
13				
14				
15				
16				
17				
18				
19				
20				
21				
22				
23				
24				
25				
26				
27				
28				
29				
30				

COMMENTS:

FORM IV VOA 1/87 Rev.

4A

VOLATILE METHOD BLANK SUMMARY

0022

Lab Name: PEI Contract: 68-D9-0037

Lab Code: PEI Case No.: 16377 SAS No.: SDG No.: EHM01

Lab File ID: VBLKJ6 Lab Sample ID: VBLKJ6

Date Analyzed: 5/22/91 Time Analyzed: 17:41

Matrix: (soil/water) WATER Level:(low/med) LOW

Instrument ID: ____Q

THIS METHOD BLANK APPLIES TO THE FOLLOWING SAMPLES, MS AND MSD:

	EPA SAMPLE NO.	LAB SAMPLE ID	LAB FILE ID	TIME ANALYZED
1	EHM01	X1-05-070-01B	EHM01RE	21:23
2				
3				
4				
5				
6				
7				
8				
9				
10				
11				
12				
13				
14				
15				
16				
17				
18				
19				
20				
21				
22				
23				
24				
25				
26				
27				
28				
29				
30				

COMMENTS:

4A
VOLATILE METHOD BLANK SUMMARY

Lab Name: PEI Contract: 68-D9-0037

Lab Code: PEI Case No.: 16377 SAS No.: SDG No.: EHM01

Lab File ID: VBLKJ9 Lab Sample ID: VBLKJ9

Date Analyzed: 5/24/91 Time Analyzed: 13:09

Matrix: (soil/water) WATER Level:(low/med) LOW

Instrument ID: ____Q

THIS METHOD BLANK APPLIES TO THE FOLLOWING SAMPLES, MS AND MSD:

	EPA SAMPLE NO.	LAB SAMPLE ID	LAB FILE ID	TIME ANALYZED
1	EHM02 DL	X1-05-070-02B	EHM02DL	18:06
2	EHM02MS	X1-05-070-02B	EHM02MS2	18:55
3	EHM02MSD	X1-05-070-02B	EHM02MD2	19:37
4				
5				
6				
7				
8				
9				
10				
11				
12				
13				
14				
15				
16				
17				
18				
19				
20				
21				
22				
23				
24				
25				
26				
27				
28				
29				
30				

COMMENTS:

4A
VOLATILE METHOD BLANK SUMMARY

Lab Name: PEI Contract: 68-D9-0037

Lab Code: PEI Case No.: 16377 SAS No.: SDG No.: EHM01

Lab File ID: VBLKC2 Lab Sample ID: VBLKC2

Date Analyzed: 5/19/91 Time Analyzed: 15:20

Matrix: (soil/water) WATER Level:(low/med) LOW

Instrument ID: ____R

THIS METHOD BLANK APPLIES TO THE FOLLOWING SAMPLES, MS AND MSD:

	EPA SAMPLE NO.	LAB SAMPLE ID	LAB FILE ID	TIME ANALYZED
1	EHM04	X1-05-070-04B	EHM04	16:45
2	EHW91	X1-05-070-15B	EHW91RE	18:16
3	EKX66	X1-06-070-14B	EKX66	18:59
4	EHM02	X1-05-070-02B	EHM02	19:39
5				
6				
7				
8				
9				
10				
11				
12				
13				
14				
15				
16				
17				
18				
19				
20				
21				
22				
23				
24				
25				
26				
27				
28				
29				
30				

COMMENTS:

4A
VOLATILE METHOD BLANK SUMMARY

Lab Name: PEI Contract: 68-D9-0037

Lab Code: PEI Case No.: 16377 SAS No.: SDG No.: EHM01

Lab File ID: VBLKD5 Lab Sample ID: VBLKD5

Date Analyzed: 6/ 6/91 Time Analyzed: 18:51

Matrix: (soil/water) SOIL Level:(low/med) MED

Instrument ID: ____R

THIS METHOD BLANK APPLIES TO THE FOLLOWING SAMPLES, MS AND MSD:

	EPA SAMPLE NO.	LAB SAMPLE ID	LAB FILE ID	TIME ANALYZED
1	ES391 DL	X1-05-070-13B	ES391DL	23:51
2				
3				
4				
5				
6				
7				
8				
9				
10				
11				
12				
13				
14				
15				
16				
17				
18				
19				
20				
21				
22				
23				
24				
25				
26				
27				
28				
29				
30				

COMMENTS:

4B
SEMIVOLATILE METHOD BLANK SUMMARY

Lab Name: PEI Contract: 68-D9-0037

Lab Code: PEI Case No.: 16377 SAS No.: SDG No.: EHM01

Lab File ID: SBLKX3 Lab Sample ID: SBLKX3

Date Extracted: 5/14/91 Extraction:(SepF/Cont/Sonc) CONT

Date Analyzed: 6/ 7/91 Time Analyzed: 15:37

Matrix: (soil/water) WATER Level:(low/med) LOW

Instrument ID: ____J

THIS METHOD BLANK APPLIES TO THE FOLLOWING SAMPLES, MS AND MSD:

	EPA SAMPLE NO.	LAB SAMPLE ID	LAB FILE ID	DATE ANALYZED
1	EMH01	X1-05-070-01A	EHM01	6/11/91
2	EHW91	X1-05-070-15A	EHW91	6/13/91
3	EHW92	X1-05-070-16A	EHW92	6/13/91
4	EHW94	X1-05-070-17A	EHW94	6/13/91
5	EJW99	X1-05-070-18A	EJW99	6/13/91
6	EMN98	X1-05-070-19A	EMN98	6/13/91
7	EMN98MS	X1-05-070-19C	EMN98MS	6/13/91
8	EMN98MSD	X1-05-070-19C	EMN98MDR	6/14/91
9	EHM03	X1-05-070-03A	EHM03	6/16/91
10	EHM03 RE	X1-05-070-03A	EHM03RE	6/18/91
11				
12				
13				
14				
15				
16				
17				
18				
19				
20				
21				
22				
23				
24				
25				
26				
27				
28				
29				
30				

COMMENTS:

4B

SEMIVOLATILE METHOD BLANK SUMMARY

0530

Lab Name: PEI Contract: 68-D9-0037

Lab Code: PEI Case No.: 16377 SAS No.: SDG No.: EHM01

Lab File ID: SBLKY9 Lab Sample ID: SBLKY9

Date Extracted: 5/22/91 Extraction:(SepF/Cont/Sonc) SONC

Date Analyzed: 6/12/91 Time Analyzed: 15:05

Matrix: (soil/water) SOIL Level:(low/med) LOW

Instrument ID: ____J

THIS METHOD BLANK APPLIES TO THE FOLLOWING SAMPLES, MS AND MSD:

	EPA SAMPLE NO.	LAB SAMPLE ID	LAB FILE ID	DATE ANALYZED
1	ES390	X1-05-070-12A	ES390	6/12/91
2	ES390MS	X1-05-070-12A	ES390MS	6/13/91
3	ES390MSD	X1-05-070-12A	ES390MSD	6/13/91
4				
5				
6				
7				
8				
9				
10				
11				
12				
13				
14				
15				
16				
17				
18				
19				
20				
21				
22				
23				
24				
25				
26				
27				
28				
29				
30				

COMMENTS:

4B

SEMIVOLATILE METHOD BLANK SUMMARY

0531

Lab Name: PEI Contract: 68-D9-0037

Lab Code: PEI Case No.: 16377 SAS No.: SDG No.: EHM01

Lab File ID: SBLKY7 Lab Sample ID: SBLKY7

Date Extracted: 5/19/91 Extraction:(SepF/Cont/Sonc) SONC

Date Analyzed: 6/13/91 Time Analyzed: 14:30

Matrix: (soil/water) SOIL Level:(low/med) LOW

Instrument ID: ____J

THIS METHOD BLANK APPLIES TO THE FOLLOWING SAMPLES, MS AND MSD:

	EPA SAMPLE NO.	LAB SAMPLE ID	LAB FILE ID	DATE ANALYZED
1	EHW89	X1-05-070-06A	EHW89	6/12/91
2	EHW90	X1-05-070-07A	EHW90	6/12/91
3	ES387	X1-05-070-09A	ES387	6/12/91
4	ES388	X1-05-070-10A	ES388	6/12/91
5	EHW88	X1-05-070-05A	EHW88	6/13/91
6	ES389	X1-05-070-11A	ES389	6/13/91
7	ES391	X1-05-070-13A	ES391	6/13/91
8				
9				
10				
11				
12				
13				
14				
15				
16				
17				
18				
19				
20				
21				
22				
23				
24				
25				
26				
27				
28				
29				
30				

COMMENTS:

4B

SEMIVOLATILE METHOD BLANK SUMMARY

0532

Lab Name: PEI Contract: 68-D9-0037

Lab Code: PEI Case No.: 16377 SAS No.: SDG No.: EHM01

Lab File ID: SBLKB7 Lab Sample ID: SBLKB7

Date Extracted: 6/15/91 Extraction:(SepF/Cont/Sonc) SEPF

Date Analyzed: 6/16/91 Time Analyzed: 16:34

Matrix: (soil/water) WATER Level:(low/med) LOW

Instrument ID: ____J

THIS METHOD BLANK APPLIES TO THE FOLLOWING SAMPLES, MS AND MSD:

	EPA SAMPLE NO.	LAB SAMPLE ID	LAB FILE ID	DATE ANALYZED
1	EKX66	X1-05-070-14A	EKX66RX	6/16/91
2	EHM04	X1-05-070-04A	EHM04RX	6/16/91
3	EHM02	X1-05-070-02A	EHM02RX	6/16/91
4				
5				
6				
7				
8				
9				
10				
11				
12				
13				
14				
15				
16				
17				
18				
19				
20				
21				
22				
23				
24				
25				
26				
27				
28				
29				
30				

COMMENTS:

4C

PESTICIDE METHOD BLANK SUMMARY

2005

Lab Name: PEI Contract: 68-D9-0037

Lab Code: PEI Case No.: 16377 SAS No.: SDG No.: EHM01

Lab Sample ID: PBLKX5 Lab File ID: YWPBX005

Matrix: (soil/water) WATER Level:(low/med) LOW

Date Extracted: 5/14/91 Extraction: (SepF/Cont/Sonc) CO

Date Analyzed (1): 5/28/91 Date Analyzed (2): 6/ 3/91

Time Analyzed (1): 0:03 Time Analyzed (2): 5:21

Instrument ID (1): _ A Instrument ID (2): _ B

GC Column ID (1): 22502401 GC Column ID (2): 2100

THIS METHOD BLANK APPLIES TO THE FOLLOWING SAMPLES, MS AND MSD:

	EPA SAMPLE NO.	LAB SAMPLE ID	DATE ANALYZED 1	DATE ANALYZED 2
1	EHM01	X1-05-070-01A	5/28/91	6/ 3/91
2	EHM02	X1-05-070-02A	5/28/91	
3	EHM04	X1-05-070-04A	5/28/91	
4	EKX66	X1-05-070-14A	5/28/91	
5	EHW91	X1-05-070-15A	5/28/91	
6	EHW92	X1-05-070-16A	5/28/91	
7	EJW94	X1-05-070-17A	5/28/91	
8	EJW99	X1-05-070-18A	5/28/91	
9	EMN98	X1-05-070-19A	5/28/91	
10	EMN98MS	X1-05-070-19A	5/28/91	
11	EMN98MSD	X1-05-070-19A	5/28/91	
12	EHM03	X1-05-070-03A	5/30/91	6/ 4/91
13	EKF57	X1-05-070-08A	5/30/91	6/ 4/91
14				
15				
16				
17				
18				
19				
20				
21				
22				
23				
24				
25				
26				

Comments:

4C

PESTICIDE METHOD BLANK SUMMARY

2006

Lab Name: PEI Contract: 68-D9-0037

Lab Code: PEI Case No.: 16377 SAS No.: SDG No.: EHM01

Lab Sample ID: PBLKY7 Lab File ID: YWPBY007

Matrix: (soil/water) SOIL Level:(low/med) LOW

Date Extracted: 5/19/91 Extraction: (SepF/Cont/Sonc) SON

Date Analyzed (1): 5/31/91 Date Analyzed (2): 6/ 3/91

Time Analyzed (1): 15:08 Time Analyzed (2): 6:22

Instrument ID (1): _ A Instrument ID (2): _ B

GC Column ID (1): 22502401 GC Column ID (2): 2100

THIS METHOD BLANK APPLIES TO THE FOLLOWING SAMPLES, MS AND MSD:

	EPA SAMPLE NO.	LAB SAMPLE ID	DATE ANALYZED 1	DATE ANALYZED 2
1	EHW88	X1-05-070-05A	5/31/91	6/ 3/91
2	EHW90	X1-05-070-07A	5/31/91	6/ 3/91
3	ES387	X1-05-070-09A	5/31/91	6/ 3/91
4	ES388	X1-05-070-10A	5/31/91	6/ 3/91
5	ES389	X1-05-070-11A	5/31/91	6/ 3/91
6	ES391	X1-05-070-13A	5/31/91	6/ 3/91
7	EHW89	X1-05-070-06A	5/31/91	6/ 3/91
8				
9				
10				
11				
12				
13				
14				
15				
16				
17				
18				
19				
20				
21				
22				
23				
24				
25				
26				

Comments:

4C

PESTICIDE METHOD BLANK SUMMARY

2007

Lab Name: PEI Contract: 68-D9-0037

Lab Code: PEI Case No.: 16377 SAS No.: SDG No.: EHM01

Lab Sample ID: PBLKY8 Lab File ID: YWPBY008

Matrix: (soil/water) SOIL Level:(low/med) LOW

Date Extracted: 5/19/91 Extraction: (SepF/Cont/Sonc) SON

Date Analyzed (1): 5/31/91 Date Analyzed (2): 6/ 3/91

Time Analyzed (1): 8:21 Time Analyzed (2): 11:39

Instrument ID (1): _ A Instrument ID (2): _ B

GC Column ID (1): 22502401 GC Column ID (2): 2100

THIS METHOD BLANK APPLIES TO THE FOLLOWING SAMPLES, MS AND MSD:

	EPA SAMPLE NO.	LAB SAMPLE ID	DATE ANALYZED 1	DATE ANALYZED 2
1	ES390MS	X1-05-070-12A	5/31/91	6/ 3/91
2	ES390	X1-05-070-12A	5/31/91	6/ 3/91
3	ES390MSD	X1-05-070-12A	5/31/91	6/ 3/91
4				
5				
6				
7				
8				
9				
10				
11				
12				
13				
14				
15				
16				
17				
18				
19				
20				
21				
22				
23				
24				
25				
26				

Comments:

1A
VOLATILE ORGANICS ANALYSIS DATA SHEET

EPA SAMPLE NO. 0436

VBLKN5

Lab Name: PEI Contract: 68-D9-0037

Lab Code: PEI Case No.: 16377 SAS No.: SDG No.: EHM01

Matrix: (soil/water) WATER Lab Sample ID: VBLKN5

Sample wt/vol: 5.000 (g/mL) ML Lab File ID: VBLKN5

Level: (low/med) LOW Date Received: 0/ 0/ 0

% Moisture: not dec. 100. Date Analyzed: 5/14/91

Column: (pack/cap) PACK Dilution Factor: 1.00

CAS NO.	COMPOUND	CONCENTRATION UNITS: (ug/L or ug/Kg) UG/L	Q
74-87-3	CHLOROMETHANE	10.	U
74-83-9	BROMOMETHANE	10.	U
75-01-4	VINYL CHLORIDE	10.	U
75-00-3	CHLOROETHANE	10.	U
75-09-2	METHYLENE CHLORIDE	5.	U
67-64-1	ACETONE	10.	U
75-15-0	CARBON DISULFIDE	5.	U
75-35-4	1,1-DICHLOROETHENE	5.	U
75-34-3	1,1-DICHLOROETHANE	5.	U
540-59-0	1,2-DICHLOROETHENE (TOTAL)	5.	U
67-66-3	CHLOROFORM	5.	U
107-06-2	1,2-DICHLOROETHANE	5.	U
78-93-3	2-BUTANONE	10.	U
71-55-6	1,1,1-TRICHLOROETHANE	5.	U
56-23-5	CARBON TETRACHLORIDE	5.	U
108-05-4	VINYL ACETATE	10.	U
75-27-4	BROMODICHLOROMETHANE	5.	U
78-87-5	1,2-DICHLOROPROPANE	5.	U
10061-01-5	CIS-1,3-DICHLOROPROPENE	5.	U
79-01-6	TRICHLOROETHENE	5.	U
124-48-1	DIBROMOCHLOROMETHANE	5.	U
79-00-5	1,1,2-TRICHLOROETHANE	5.	U
71-43-2	BENZENE	5.	U
10061-02-6	TRANS-1,3-DICHLOROPROPENE	5.	U
75-25-2	BROMOFORM	5.	U
108-10-1	4-METHYL-2-PENTANONE	10.	U
591-78-6	2-HEXANONE	10.	U
127-18-4	TETRACHLOROETHENE	5.	U
79-34-5	1,1,2,2-TETRACHLOROETHANE	5.	U
108-88-3	TOLUENE	5.	U
108-90-7	CHLOROBENZENE	5.	U
100-41-4	ETHYLBENZENE	5.	U
100-42-5	STYRENE	5.	U
1330-20-7	XYLENES (TOTAL)	5.	U

1E

VOLATILE ORGANICS ANALYSIS DATA SHEET
TENTATIVELY IDENTIFIED COMPOUNDS

EPA SAMPLE NO.

VBLKN5

0437

Lab Name: PEI Contract: 68-D9-0037

Lab Code: PEI Case No.: 16377 SAS No.: SDG No.: EHM01

Matrix: (soil/water) WATER Lab Sample ID: VBLKN5

Sample wt/vol: 5.000 (g/mL) ML Lab File ID: VBLKN5

Level: (low/med) LOW Date Received: 0/ 0/ 0

% Moisture: not dec. 100. Date Analyzed: 5/14/91

Column: (pack/cap) PACK Dilution Factor: 1.00

Number TICs found: 0 CONCENTRATION UNITS: (ug/L or ug/Kg) UG/L

	CAS NUMBER	COMPOUND NAME	RT	EST. CONC.	Q
1.					
2.					
3.					
4.					
5.					
6.					
7.					
8.					
9.					
10.					
11.					
12.					
13.					
14.					
15.					
16.					
17.					
18.					
19.					
20.					
21.					
22.					
23.					
24.					
25.					
26.					
27.					
28.					
29.					
30.					

1A
VOLATILE ORGANICS ANALYSIS DATA SHEET

EPA SAMPLE NO.

0441

VBLKJ1

Lab Name: PEI Contract: 68-D9-0037

Lab Code: PEI Case No.: 16377 SAS No.: SDG No.: EHM01

Matrix: (soil/water) SOIL Lab Sample ID: VBLKJ1

Sample wt/vol: 5.000 (g/mL) G Lab File ID: VBLKJ1

Level: (low/med) LOW Date Received: 0/ 0/ 0

% Moisture: not dec. 0. Date Analyzed: 5/18/91

Column: (pack/cap) PACK Dilution Factor: 1.00

CAS NO.	COMPOUND	CONCENTRATION UNITS: (ug/L or ug/Kg) UG/KG	Q
74-87-3	CHLOROMETHANE	10.	U
74-83-9	BROMOMETHANE	10.	U
75-01-4	VINYL CHLORIDE	10.	U
75-00-3	CHLOROETHANE	10.	U
75-09-2	METHYLENE CHLORIDE	1.	J
67-64-1	ACETONE	10.	U
75-15-0	CARBON DISULFIDE	5.	U
75-35-4	1,1-DICHLOROETHENE	5.	U
75-34-3	1,1-DICHLOROETHANE	5.	U
540-59-0	1,2-DICHLOROETHENE (TOTAL)	5.	U
67-66-3	CHLOROFORM	5.	U
107-06-2	1,2-DICHLOROETHANE	5.	U
78-93-3	2-BUTANONE	2.	J
71-55-6	1,1,1-TRICHLOROETHANE	2.	J
56-23-5	CARBON TETRACHLORIDE	5.	U
108-05-4	VINYL ACETATE	10.	U
75-27-4	BROMODICHLOROMETHANE	5.	U
78-87-5	1,2-DICHLOROPROPANE	5.	U
10061-01-5	CIS-1,3-DICHLOROPROPENE	5.	U
79-01-6	TRICHLOROETHENE	5.	U
124-48-1	DIBROMOCHLOROMETHANE	5.	U
79-00-5	1,1,2-TRICHLOROETHANE	5.	U
71-43-2	BENZENE	5.	U
10061-02-6	TRANS-1,3-DICHLOROPROPENE	5.	U
75-25-2	BROMOFORM	5.	U
108-10-1	4-METHYL-2-PENTANONE	10.	U
591-78-6	2-HEXANONE	10.	U
127-18-4	TETRACHLOROETHENE	5.	U
79-34-5	1,1,2,2-TETRACHLOROETHANE	5.	U
108-88-3	TOLUENE	5.	U
108-90-7	CHLOROBENZENE	5.	U
100-41-4	ETHYLBENZENE	5.	U
100-42-5	STYRENE	5.	U
1330-20-7	XYLENES (TOTAL)	5.	U

1E

VOLATILE ORGANICS ANALYSIS DATA SHEET
TENTATIVELY IDENTIFIED COMPOUNDS

EPA SAMPLE NO.

VBLKJ1

0442

Lab Name: PEI Contract: 68-D9-0037

Lab Code: PEI Case No.: 16377 SAS No.: SDG No.: EHM01

Matrix: (soil/water) SOIL Lab Sample ID: VBLKJ1

Sample wt/vol: 5.000 (g/mL) G Lab File ID: VBLKJ1

Level: (low/med) LOW Date Received: 0/ 0/ 0

% Moisture: not dec. 0. Date Analyzed: 5/18/91

Column: (pack/cap) PACK Dilution Factor: 1.00

Number TICs found: 0 CONCENTRATION UNITS: (ug/L or ug/Kg) UG/KG

	CAS NUMBER	COMPOUND NAME	RT	EST. CONC.	Q
1.					
2.					
3.					
4.					
5.					
6.					
7.					
8.					
9.					
10.					
11.					
12.					
13.					
14.					
15.					
16.					
17.					
18.					
19.					
20.					
21.					
22.					
23.					
24.					
25.					
26.					
27.					
28.					
29.					
30.					

1A
VOLATILE ORGANICS ANALYSIS DATA SHEET

EPA SAMPLE NO.

VBLKJ2

0450

Lab Name: PEI Contract: 68-D9-0037

Lab Code: PEI Case No.: 16377 SAS No.: SDG No.: EHM01

Matrix: (soil/water) SOIL Lab Sample ID: VBLKJ2

Sample wt/vol: 5.000 (g/mL) G Lab File ID: VBLKJ2

Level: (low/med) LOW Date Received: 0/ 0/ 0

% Moisture: not dec. 0. Date Analyzed: 5/19/91

Column: (pack/cap) PACK Dilution Factor: 1.00

CAS NO.	COMPOUND	CONCENTRATION UNITS: (ug/L or ug/Kg) UG/KG	Q
74-87-3	CHLOROMETHANE	10.	U
74-83-9	BROMOMETHANE	10.	U
75-01-4	VINYL CHLORIDE	10.	U
75-00-3	CHLOROETHANE	10.	U
75-09-2	METHYLENE CHLORIDE	5.	U
67-64-1	ACETONE	10.	U
75-15-0	CARBON DISULFIDE	5.	U
75-35-4	1,1-DICHLOROETHENE	5.	U
75-34-3	1,1-DICHLOROETHANE	5.	U
540-59-0	1,2-DICHLOROETHENE (TOTAL)	5.	U
67-66-3	CHLOROFORM	5.	U
107-06-2	1,2-DICHLOROETHANE	5.	U
78-93-3	2-BUTANONE	3.	J
71-55-6	1,1,1-TRICHLOROETHANE	5.	U
56-23-5	CARBON TETRACHLORIDE	5.	U
108-05-4	VINYL ACETATE	10.	U
75-27-4	BROMODICHLOROMETHANE	5.	U
78-87-5	1,2-DICHLOROPROPANE	5.	U
10061-01-5	CIS-1,3-DICHLOROPROPENE	5.	U
79-01-6	TRICHLOROETHENE	5.	U
124-48-1	DIBROMOCHLOROMETHANE	5.	U
79-00-5	1,1,2-TRICHLOROETHANE	5.	U
71-43-2	BENZENE	5.	U
10061-02-6	TRANS-1,3-DICHLOROPROPENE	5.	U
75-25-2	BROMOFORM	5.	U
108-10-1	4-METHYL-2-PENTANONE	10.	U
591-78-6	2-HEXANONE	10.	U
127-18-4	TETRACHLOROETHENE	5.	U
79-34-5	1,1,2,2-TETRACHLOROETHANE	5.	U
108-88-3	TOLUENE	5.	U
108-90-7	CHLOROBENZENE	5.	U
100-41-4	ETHYLBENZENE	5.	U
100-42-5	STYRENE	5.	U
1330-20-7	XYLENES (TOTAL)	5.	U

1E

VOLATILE ORGANICS ANALYSIS DATA SHEET
TENTATIVELY IDENTIFIED COMPOUNDS

EPA SAMPLE NO.

VBLKJ2

0451

Lab Name: PEI Contract: 68-D9-0037

Lab Code: PEI Case No.: 16377 SAS No.: SDG No.: EHM01

Matrix: (soil/water) SOIL Lab Sample ID: VBLKJ2

Sample wt/vol: 5.000 (g/mL) G Lab File ID: VBLKJ2

Level: (low/med) LOW Date Received: 0/ 0/ 0

% Moisture: not dec. 0. Date Analyzed: 5/19/91

Column: (pack/cap) PACK Dilution Factor: 1.00

Number TICs found: 1

CONCENTRATION UNITS:
(ug/L or ug/Kg) UG/KG

	CAS NUMBER	COMPOUND NAME	RT	EST. CONC.	Q
1.	- -	UNKNOWN DICHLOROBENZENE	32.30	7.	J
2.					
3.					
4.					
5.					
6.					
7.					
8.					
9.					
10.					
11.					
12.					
13.					
14.					
15.					
16.					
17.					
18.					
19.					
20.					
21.					
22.					
23.					
24.					
25.					
26.					
27.					
28.					
29.					
30.					

1A
VOLATILE ORGANICS ANALYSIS DATA SHEET

EPA SAMPLE NO.

0457

VBLKJ3

Lab Name: PEI Contract: 68-D9-0037

Lab Code: PEI Case No.: 16377 SAS No.: SDG No.: EHM01

Matrix: (soil/water) WATER Lab Sample ID: VBLKJ3

Sample wt/vol: 5.000 (g/mL) ML Lab File ID: VBLKJ3

Level: (low/med) LOW Date Received: 0/ 0/ 0

% Moisture: not dec. 100. Date Analyzed: 5/20/91

Column: (pack/cap) PACK Dilution Factor: 1.00

CAS NO.	COMPOUND	CONCENTRATION UNITS: (ug/L or ug/Kg) UG/L	Q
74-87-3	CHLOROMETHANE	10.	U
74-83-9	BROMOMETHANE	10.	U
75-01-4	VINYL CHLORIDE	10.	U
75-00-3	CHLOROETHANE	10.	U
75-09-2	METHYLENE CHLORIDE	5.	J
67-64-1	ACETONE	24.	
75-15-0	CARBON DISULFIDE	5.	U
75-35-4	1,1-DICHLOROETHENE	5.	U
75-34-3	1,1-DICHLOROETHANE	5.	U
540-59-0	1,2-DICHLOROETHENE (TOTAL)	5.	U
67-66-3	CHLOROFORM	5.	U
107-06-2	1,2-DICHLOROETHANE	5.	U
78-93-3	2-BUTANONE	7.	J
71-55-6	1,1,1-TRICHLOROETHANE	5.	U
56-23-5	CARBON TETRACHLORIDE	5.	U
108-05-4	VINYL ACETATE	10.	U
75-27-4	BROMODICHLOROMETHANE	5.	U
78-87-5	1,2-DICHLOROPROPANE	5.	U
10061-01-5	CIS-1,3-DICHLOROPROPENE	5.	U
79-01-6	TRICHLOROETHENE	5.	U
124-48-1	DIBROMOCHLOROMETHANE	5.	U
79-00-5	1,1,2-TRICHLOROETHANE	5.	U
71-43-2	BENZENE	5.	U
10061-02-6	TRANS-1,3-DICHLOROPROPENE	5.	U
75-25-2	BROMOFORM	5.	U
108-10-1	4-METHYL-2-PENTANONE	3.	J
591-78-6	2-HEXANONE	10.	U
127-18-4	TETRACHLOROETHENE	5.	U
79-34-5	1,1,2,2-TETRACHLOROETHANE	5.	U
108-88-3	TOLUENE	5.	U
108-90-7	CHLOROBENZENE	5.	U
100-41-4	ETHYLBENZENE	5.	U
100-42-5	STYRENE	5.	U
1330-20-7	XYLENES (TOTAL)	5.	U

1E

VOLATILE ORGANICS ANALYSIS DATA SHEET
TENTATIVELY IDENTIFIED COMPOUNDS

EPA SAMPLE NO.

VBLKJ3

0458

Lab Name: PEI Contract: 68-D9-0037

Lab Code: PEI Case No.: 16377 SAS No.: SDG No.: EHM01

Matrix: (soil/water) WATER Lab Sample ID: VBLKJ3

Sample wt/vol: 5.000 (g/mL) ML Lab File ID: VBLKJ3

Level: (low/med) LOW Date Received: 0/ 0/ 0

% Moisture: not dec. 100. Date Analyzed: 5/20/91

Column: (pack/cap) PACK Dilution Factor: 1.00

Number TICs found: 4

CONCENTRATION UNITS:
(ug/L or ug/Kg) UG/L

	CAS NUMBER	COMPOUND NAME	RT	EST. CONC.	Q
1.	- -	UNKNOWN DICHLOROBENZENE	31.33	30.	J
2.	- -	UNKNOWN	26.67	3.	J
3.	- -	UNKNOWN	28.62	20.	J
4.	- -	UNKNOWN	29.12	30.	J
5.					
6.					
7.					
8.					
9.					
10.					
11.					
12.					
13.					
14.					
15.					
16.					
17.					
18.					
19.					
20.					
21.					
22.					
23.					
24.					
25.					
26.					
27.					
28.					
29.					
30.					

1A
VOLATILE ORGANICS ANALYSIS DATA SHEET

EPA SAMPLE NO.

VBLKJ6

0472

Lab Name: PEI Contract: 68-D9-0037

Lab Code: PEI Case No.: 16377 SAS No.: SDG No.: EHM01

Matrix: (soil/water) WATER Lab Sample ID: VBLKJ6

Sample wt/vol: 5.000 (g/mL) ML Lab File ID: VBLKJ6

Level: (low/med) LOW Date Received: 0/ 0/ 0

% Moisture: not dec. 100. Date Analyzed: 5/22/91

Column: (pack/cap) PACK Dilution Factor: 1.00

CAS NO.	COMPOUND	CONCENTRATION UNITS: (ug/L or ug/Kg) UG/L	Q
74-87-3	CHLOROMETHANE	10.	U
74-83-9	BROMOMETHANE	10.	U
75-01-4	VINYL CHLORIDE	10.	U
75-00-3	CHLOROETHANE	10.	U
75-09-2	METHYLENE CHLORIDE	5.	
67-64-1	ACETONE	10.	U
75-15-0	CARBON DISULFIDE	5.	U
75-35-4	1,1-DICHLOROETHENE	5.	U
75-34-3	1,1-DICHLOROETHANE	5.	U
540-59-0	1,2-DICHLOROETHENE (TOTAL)	5.	U
67-66-3	CHLOROFORM	1.	J
107-06-2	1,2-DICHLOROETHANE	5.	U
78-93-3	2-BUTANONE	10.	U
71-55-6	1,1,1-TRICHLOROETHANE	5.	U
56-23-5	CARBON TETRACHLORIDE	5.	U
108-05-4	VINYL ACETATE	10.	U
75-27-4	BROMODICHLOROMETHANE	5.	U
78-87-5	1,2-DICHLOROPROPANE	5.	U
10061-01-5	CIS-1,3-DICHLOROPROPENE	5.	U
79-01-6	TRICHLOROETHENE	5.	U
124-48-1	DIBROMOCHLOROMETHANE	5.	U
79-00-5	1,1,2-TRICHLOROETHANE	5.	U
71-43-2	BENZENE	5.	U
10061-02-6	TRANS-1,3-DICHLOROPROPENE	5.	U
75-25-2	BROMOFORM	5.	U
108-10-1	4-METHYL-2-PENTANONE	10.	U
591-78-6	2-HEXANONE	10.	U
127-18-4	TETRACHLOROETHENE	5.	U
79-34-5	1,1,2,2-TETRACHLOROETHANE	5.	U
108-88-3	TOLUENE	5.	U
108-90-7	CHLOROBENZENE	5.	U
100-41-4	ETHYLBENZENE	5.	U
100-42-5	STYRENE	5.	U
1330-20-7	XYLENES (TOTAL)	5.	U

1E
VOLATILE ORGANICS ANALYSIS DATA SHEET
TENTATIVELY IDENTIFIED COMPOUNDS

EPA SAMPLE NO.

VBLKJ6

0473

Lab Name: PEI Contract: 68-D9-0037

Lab Code: PEI Case No.: 16377 SAS No.: SDG No.: EHM01

Matrix: (soil/water) WATER Lab Sample ID: VBLKJ6

Sample wt/vol: 5.000 (g/mL) ML Lab File ID: VBLKJ6

Level: (low/med) LOW Date Received: 0/ 0/ 0

% Moisture: not dec. 100. Date Analyzed: 5/22/91

Column: (pack/cap) PACK Dilution Factor: 1.00

Number TICs found: 2

CONCENTRATION UNITS:
(ug/L or ug/Kg) UG/L

	CAS NUMBER	COMPOUND NAME	RT	EST. CONC.	Q
1.	- -	UNKNOWN	32.01	4.	J
2.	- -	UNKNOWN	32.35	6.	J
3.					
4.					
5.					
6.					
7.					
8.					
9.					
10.					
11.					
12.					
13.					
14.					
15.					
16.					
17.					
18.					
19.					
20.					
21.					
22.					
23.					
24.					
25.					
26.					
27.					
28.					
29.					
30.					

1A
VOLATILE ORGANICS ANALYSIS DATA SHEET

EPA SAMPLE NO. 0482

VBLKJ9

Lab Name: PEI Contract: 68-D9-0037

Lab Code: PEI Case No.: 16377 SAS No.: SDG No.: EHM01

Matrix: (soil/water) WATER Lab Sample ID: VBLKJ9

Sample wt/vol: 5.000 (g/mL) ML Lab File ID: VBLKJ9

Level: (low/med) LOW Date Received: 0/ 0/ 0

% Moisture: not dec. 100. Date Analyzed: 5/24/91

Column: (pack/cap) PACK Dilution Factor: 1.00

CAS NO.	COMPOUND	CONCENTRATION UNITS: (ug/L or ug/Kg) UG/L	Q
74-87-3	CHLOROMETHANE	10.	U
74-83-9	BROMOMETHANE	10.	U
75-01-4	VINYL CHLORIDE	10.	U
75-00-3	CHLOROETHANE	10.	U
75-09-2	METHYLENE CHLORIDE	5.	U
67-64-1	ACETONE	6.	J
75-15-0	CARBON DISULFIDE	5.	U
75-35-4	1,1-DICHLOROETHENE	5.	U
75-34-3	1,1-DICHLOROETHANE	5.	U
540-59-0	1,2-DICHLOROETHENE (TOTAL)	5.	U
67-66-3	CHLOROFORM	5.	U
107-06-2	1,2-DICHLOROETHANE	5.	U
78-93-3	2-BUTANONE	10.	U
71-55-6	1,1,1-TRICHLOROETHANE	5.	U
56-23-5	CARBON TETRACHLORIDE	5.	U
108-05-4	VINYL ACETATE	10.	U
75-27-4	BROMODICHLOROMETHANE	5.	U
78-87-5	1,2-DICHLOROPROPANE	5.	U
10061-01-5	CIS-1,3-DICHLOROPROPENE	5.	U
79-01-6	TRICHLOROETHENE	5.	U
124-48-1	DIBROMOCHLOROMETHANE	5.	U
79-00-5	1,1,2-TRICHLOROETHANE	5.	U
71-43-2	BENZENE	5.	U
10061-02-6	TRANS-1,3-DICHLOROPROPENE	5.	U
75-25-2	BROMOFORM	5.	U
108-10-1	4-METHYL-2-PENTANONE	10.	U
591-78-6	2-HEXANONE	10.	U
127-18-4	TETRACHLOROETHENE	5.	U
79-34-5	1,1,2,2-TETRACHLOROETHANE	5.	U
108-88-3	TOLUENE	5.	U
108-90-7	CHLOROBENZENE	5.	U
100-41-4	ETHYLBENZENE	5.	U
100-42-5	STYRENE	5.	U
1330-20-7	XYLENES (TOTAL)	5.	U

1E

VOLATILE ORGANICS ANALYSIS DATA SHEET
TENTATIVELY IDENTIFIED COMPOUNDS

EPA SAMPLE NO.

VBLKJ9

0483

Lab Name: PEI Contract: 68-D9-0037

Lab Code: PEI Case No.: 16377 SAS No.: SDG No.: EHM01

Matrix: (soil/water) WATER Lab Sample ID: VBLKJ9

Sample wt/vol: 5.000 (g/mL) ML Lab File ID: VBLKJ9

Level: (low/med) LOW Date Received: 0/ 0/ 0

% Moisture: not dec. 100. Date Analyzed: 5/24/91

Column: (pack/cap) PACK Dilution Factor: 1.00

Number TICs found: 1

CONCENTRATION UNITS:
(ug/L or ug/Kg) UG/L

	CAS NUMBER	COMPOUND NAME	RT	EST. CONC.	Q
1.	- -	UNKNOWN DECHLORORBENZENE	31.84	20.	J
2.					
3.					
4.					
5.					
6.					
7.					
8.					
9.					
10.					
11.					
12.					
13.					
14.					
15.					
16.					
17.					
18.					
19.					
20.					
21.					
22.					
23.					
24.					
25.					
26.					
27.					
28.					
29.					
30.					

1A
VOLATILE ORGANICS ANALYSIS DATA SHEET

EPA SAMPLE NO. 0489

VBLKC2

Lab Name: PEI Contract: 68-D9-0037

Lab Code: PEI Case No.: 16377 SAS No.: SDG No.: EHM01

Matrix: (soil/water) WATER Lab Sample ID: VBLKC2

Sample wt/vol: 5.000 (g/mL) ML Lab File ID: VBLKC2

Level: (low/med) LOW Date Received: 0/ 0/ 0

% Moisture: not dec. 100. Date Analyzed: 5/19/91

Column: (pack/cap) PACK Dilution Factor: 1.00

CAS NO.	COMPOUND	CONCENTRATION UNITS: (ug/L or ug/Kg) UG/L	Q
74-87-3	CHLOROMETHANE	10.	U
74-83-9	BROMOMETHANE	10.	U
75-01-4	VINYL CHLORIDE	10.	U
75-00-3	CHLOROETHANE	10.	U
75-09-2	METHYLENE CHLORIDE	2.	J
67-64-1	ACETONE	10.	U
75-15-0	CARBON DISULFIDE	5.	U
75-35-4	1,1-DICHLOROETHENE	5.	U
75-34-3	1,1-DICHLOROETHANE	5.	U
540-59-0	1,2-DICHLOROETHENE (TOTAL)	5.	U
67-66-3	CHLOROFORM	5.	U
107-06-2	1,2-DICHLOROETHANE	5.	U
78-93-3	2-BUTANONE	10.	U
71-55-6	1,1,1-TRICHLOROETHANE	5.	U
56-23-5	CARBON TETRACHLORIDE	5.	U
108-05-4	VINYL ACETATE	10.	U
75-27-4	BROMODICHLOROMETHANE	5.	U
78-87-5	1,2-DICHLOROPROPANE	5.	U
10061-01-5	CIS-1,3-DICHLOROPROPENE	5.	U
79-01-6	TRICHLOROETHENE	5.	U
124-48-1	DIBROMOCHLOROMETHANE	5.	U
79-00-5	1,1,2-TRICHLOROETHANE	5.	U
71-43-2	BENZENE	5.	U
10061-02-6	TRANS-1,3-DICHLOROPROPENE	5.	U
75-25-2	BROMOFORM	5.	U
108-10-1	4-METHYL-2-PENTANONE	10.	U
591-78-6	2-HEXANONE	10.	U
127-18-4	TETRACHLOROETHENE	5.	U
79-34-5	1,1,2,2-TETRACHLOROETHANE	5.	U
108-88-3	TOLUENE	5.	U
108-90-7	CHLOROBENZENE	5.	U
100-41-4	ETHYLBENZENE	5.	U
100-42-5	STYRENE	5.	U
1330-20-7	XYLENE (TOTAL)	5.	U

1E
VOLATILE ORGANICS ANALYSIS DATA SHEET
TENTATIVELY IDENTIFIED COMPOUNDS

EPA SAMPLE NO.

VBLKC2

0490

Lab Name: PEI Contract: 68-D9-0037

Lab Code: PEI Case No.: 16377 SAS No.: SDG No.: EHM01

Matrix: (soil/water) WATER Lab Sample ID: VBLKC2

Sample wt/vol: 5.000 (g/mL) ML Lab File ID: VBLKC2

Level: (low/med) LOW Date Received: 0/ 0/ 0

% Moisture: not dec. 100. Date Analyzed: 5/19/91

Column: (pack/cap) PACK Dilution Factor: 1.00

Number TICs found: 1

CONCENTRATION UNITS:
(ug/L or ug/Kg) UG/L

	CAS NUMBER	COMPOUND NAME	RT	EST. CONC.	Q
1.	- -	UNKNOWN DICHLOROBENZENE	31.03	30.	J
2.					
3.					
4.					
5.					
6.					
7.					
8.					
9.					
10.					
11.					
12.					
13.					
14.					
15.					
16.					
17.					
18.					
19.					
20.					
21.					
22.					
23.					
24.					
25.					
26.					
27.					
28.					
29.					
30.					

1A
VOLATILE ORGANICS ANALYSIS DATA SHEET

EPA SAMPLE NO. 0496

VBLKD5

Lab Name: PEI Contract: 68-D9-0037

Lab Code: PEI Case No.: 16377 SAS No.: SDG No.: EHM01

Matrix: (soil/water) SOIL Lab Sample ID: VBLKD5

Sample wt/vol: 4.000 (g/mL) G Lab File ID: VBLKD5

Level: (low/med) MED Date Received: 0/ 0/ 0

% Moisture: not dec. 0. Date Analyzed: 6/ 6/91

Column: (pack/cap) PACK Dilution Factor: 1.00

CAS NO.	COMPOUND	CONCENTRATION UNITS: (ug/L or ug/Kg) UG/KG	Q
74-87-3	CHLOROMETHANE	1300.	U
74-83-9	BROMOMETHANE	1300.	U
75-01-4	VINYL CHLORIDE	1300.	U
75-00-3	CHLOROETHANE	1300.	U
75-09-2	METHYLENE CHLORIDE	630.	U
67-64-1	ACETONE	1300.	U
75-15-0	CARBON DISULFIDE	630.	U
75-35-4	1,1-DICHLOROETHENE	630.	U
75-34-3	1,1-DICHLOROETHANE	630.	U
540-59-0	1,2-DICHLOROETHENE (TOTAL)	630.	U
67-66-3	CHLOROFORM	630.	U
107-06-2	1,2-DICHLOROETHANE	630.	U
78-93-3	2-BUTANONE	1300.	U
71-55-6	1,1,1-TRICHLOROETHANE	630.	U
56-23-5	CARBON TETRACHLORIDE	630.	U
108-05-4	VINYL ACETATE	1300.	U
75-27-4	BROMODICHLOROMETHANE	630.	U
78-87-5	1,2-DICHLOROPROPANE	630.	U
10061-01-5	CIS-1,3-DICHLOROPROPENE	630.	U
79-01-6	TRICHLOROETHENE	630.	U
124-48-1	DIBROMOCHLOROMETHANE	630.	U
79-00-5	1,1,2-TRICHLOROETHANE	630.	U
71-43-2	BENZENE	630.	U
10061-02-6	TRANS-1,3-DICHLOROPROPENE	630.	U
75-25-2	BROMOFORM	630.	U
108-10-1	4-METHYL-2-PENTANONE	1300.	U
591-78-6	2-HEXANONE	1300.	U
127-18-4	TETRACHLOROETHENE	630.	U
79-34-5	1,1,2,2-TETRACHLOROETHANE	630.	U
108-88-3	TOLUENE	630.	U
108-90-7	CHLOROBENZENE	630.	U
100-41-4	ETHYLBENZENE	630.	U
100-42-5	STYRENE	630.	U
1330-20-7	XYLENE (TOTAL)	630.	U

1E
VOLATILE ORGANICS ANALYSIS DATA SHEET
TENTATIVELY IDENTIFIED COMPOUNDS

EPA SAMPLE NO. 0497

VBLKD5

Lab Name: PEI Contract: 68-D9-0037

Lab Code: PEI Case No.: 16377 SAS No.: SDG No.: EHM01

Matrix: (soil/water) SOIL Lab Sample ID: VBLKD5

Sample wt/vol: 4.000 (g/mL) G Lab File ID: VBLKD5

Level: (low/med) MED Date Received: 0/ 0/ 0

% Moisture: not dec. 0. Date Analyzed: 6/ 6/91

Column: (pack/cap) PACK Dilution Factor: 1.00

Number TICs found: 0

CONCENTRATION UNITS:
(ug/L or ug/Kg) UG/KG

	CAS NUMBER	COMPOUND NAME	RT	EST. CONC.	Q
1.					
2.					
3.					
4.					
5.					
6.					
7.					
8.					
9.					
10.					
11.					
12.					
13.					
14.					
15.					
16.					
17.					
18.					
19.					
20.					
21.					
22.					
23.					
24.					
25.					
26.					
27.					
28.					
29.					
30.					

1B
SEMIVOLATILE ORGANICS ANALYSIS DATA SHEET

EPA SAMPLE NO.

SBLKX3

0932

Lab Name: PEI Contract: 68-D9-0037

Lab Code: PEI Case No.: 16377 SAS No.: SDG No.: EHM01

Matrix: (soil/water) WATER Lab Sample ID: SBLKX3

Sample wt/vol: 1000.0 (g/mL) ML Lab File ID: SBLKX3

Level: (low/med) LOW Date Received: 0/ 0/ 0

% Moisture: not dec. 100. dec.____ Date Extracted: 5/14/91

Extraction: (SepF/Cont/Sonc) CONT Date Analyzed: 6/ 7/91

GPC Cleanup: (Y/N) N pH: 7.0 Dilution Factor: 1.00

CAS NO.	COMPOUND	CONCENTRATION UNITS: (ug/L or ug/Kg) UG/L	Q
108-95-2	Phenol	10.	U
111-44-4	bis(2-Chloroethyl)ether	10.	U
95-57-8	2-Chlorophenol	10.	U
541-73-1	1,3-Dichlorobenzene	10.	U
106-46-7	1,4-Dichlorobenzene	10.	U
100-51-6	Benzyl alcohol	10.	U
95-50-1	1,2-Dichlorobenzene	10.	U
95-48-7	2-Methylphenol	10.	U
108-60-1	bis(2-Chloroisopropyl)ether	10.	U
106-44-5	4-Methylphenol	10.	U
621-64-7	N-Nitroso-di-n-propylamine	10.	U
67-72-1	Hexachloroethane	10.	U
98-95-3	Nitrobenzene	10.	U
78-59-1	Isophorone	10.	U
88-75-5	2-Nitrophenol	10.	U
105-67-9	2,4-Dimethylphenol	10.	U
65-85-0	Benzoic acid	50.	U
111-91-1	bis(2-Chloroethoxy)methane	10.	U
120-83-2	2,4-Dichlorophenol	10.	U
120-82-1	1,2,4-Trichlorobenzene	10.	U
91-20-3	Naphthalene	10.	U
106-47-8	4-Chloroaniline	10.	U
87-68-3	Hexachlorobutadiene	10.	U
59-50-7	4-Chloro-3-methylphenol	10.	U
91-57-6	2-Methylnaphthalene	10.	U
77-47-4	Hexachlorocyclopentadiene	10.	U
88-06-2	2,4,6-Trichlorophenol	10.	U
95-95-4	2,4,5-Trichlorophenol	50.	U
91-58-7	2-Chloronaphthalene	10.	U
88-74-4	2-Nitroaniline	50.	U
131-11-3	Dimethylphthalate	10.	U
208-96-8	Acenaphthylene	10.	U
606-20-2	2,6-Dinitrotoluene	10.	U

1C
SEMIVOLATILE ORGANICS ANALYSIS DATA SHEET

EPA SAMPLE NO.
0933
SBLKX3

Lab Name: PEI Contract: 68-D9-0037

Lab Code: PEI Case No.: 16377 SAS No.: SDG No.: EHM01

Matrix: (soil/water) WATER Lab Sample ID: SBLKX3

Sample wt/vol: 1000.0 (g/mL) ML Lab File ID: SBLKX3

Level: (low/med) LOW Date Received: 0/ 0/ 0

% Moisture: not dec. 100. dec.____ Date Extracted: 5/14/91

Extraction: (SepF/Cont/Sonc) CONT Date Analyzed: 6/ 7/91

GPC Cleanup: (Y/N) N pH: 7.0 Dilution Factor: 1.00

CAS NO.	COMPOUND	CONCENTRATION UNITS: (ug/L or ug/Kg) UG/L	Q
99-09-2	3-Nitroaniline	50.	U
83-32-9	Acenaphthene	10.	U
51-28-5	2,4-Dinitrophenol	50.	U
100-02-7	4-Nitrophenol	50.	U
132-64-9	Dibenzofuran	10.	U
121-14-2	2,4-Dinitrotoluene	10.	U
84-66-2	Diethylphthalate	10.	U
7005-72-3	4-Chlorophenyl-phenylether	10.	U
86-73-7	Fluorene	10.	U
100-01-6	4-Nitroaniline	50.	U
534-52-1	4,6-Dinitro-2-methylphenol	50.	U
86-30-6	N-Nitrosodiphenylamine (1)	10.	U
101-55-3	4-Bromophenyl-phenylether	10.	U
118-74-1	Hexachlorobenzene	10.	U
87-86-5	Pentachlorophenol	50.	U
85-01-8	Phenanthrene	10.	U
120-12-7	Anthracene	10.	U
84-74-2	Di-n-butylphthalate	10.	U
206-44-0	Fluoranthene	10.	U
129-00-0	Pyrene	10.	U
85-68-7	Butylbenzylphthalate	10.	U
91-94-1	3,3'-Dichlorobenzidine	20.	U
56-55-3	Benzo(a)anthracene	10.	U
218-01-9	Chrysene	10.	U
117-81-7	bis(2-Ethylhexyl)phthalate	31.	
117-84-0	Di-n-octylphthalate	10.	U
205-99-2	Benzo(b)fluoranthene	10.	U
207-08-9	Benzo(k)fluoranthene	10.	U
50-32-8	Benzo(a)pyrene	10.	U
193-39-5	Indeno(1,2,3-cd)pyrene	10.	U
53-70-3	Dibenz(a,h)anthracene	10.	U
191-24-2	Benzo(g,h,i)perylene	10.	U

(1) - Cannot be separated from diphenylamine

1F

SEMIVOLATILE ORGANICS ANALYSIS DATA SHEET
TENTATIVELY IDENTIFIED COMPOUNDS

EPA SAMPLE NO.

SBLKX3

Lab Name: PEI Contract: 68-D9-0037

Lab Code: PEI Case No.: 16377 SAS No.: SDG No.: EHM01

Matrix: (soil/water) WATER Lab Sample ID: SBLKX3

Sample wt/vol: 1000.0 (g/mL) ML Lab File ID: SBLKX3

Level: (low/med) LOW Date Received: 0/ 0/ 0

% Moisture: not dec. 100. dec._____ Date Extracted: 5/14/91

Extraction: (SepF/Cont/Sonc) CONT Date Analyzed: 6/ 7/91

GPC Cleanup: (Y/N) N pH: 7.0 Dilution Factor: 1.00

Number TICs found: 0

CONCENTRATION UNITS:
(ug/L or ug/Kg) UG/L

	CAS NUMBER	COMPOUND NAME	RT	EST. CONC.	Q
1.					
2.					
3.					
4.					
5.					
6.					
7.					
8.					
9.					
10.					
11.					
12.					
13.					
14.					
15.					
16.					
17.					
18.					
19.					
20.					
21.					
22.					
23.					
24.					
25.					
26.					
27.					
28.					
29.					
30.					

1F

SEMIVOLATILE ORGANICS ANALYSIS DATA SHEET
TENTATIVELY IDENTIFIED COMPOUNDS

EPA SAMPLE NO.

SBLKY7

C945

Lab Name: PEI Contract: 68-D9-0037

Lab Code: PEI Case No.: 16377 SAS No.: SDG No.: EHM01

Matrix: (soil/water) SOIL Lab Sample ID: SBLKY7

Sample wt/vol: 30.0 (g/mL) G Lab File ID: SBLKY7

Level: (low/med) LOW Date Received: 0/ 0/ 0

% Moisture: not dec. 0. dec._____ Date Extracted: 5/19/91

Extraction: (SepF/Cont/Sonc) SONC Date Analyzed: 6/13/91

GPC Cleanup: (Y/N) Y pH: 5.0 Dilution Factor: 1.00

Number TICs found: 1

CONCENTRATION UNITS:
(ug/L or ug/Kg) UG/KG

	CAS NUMBER	COMPOUND NAME	RT	EST. CONC.	Q
1.	- -	UNKNOWN	31.18	8000.	J
2.					
3.					
4.					
5.					
6.					
7.					
8.					
9.					
10.					
11.					
12.					
13.					
14.					
15.					
16.					
17.					
18.					
19.					
20.					
21.					
22.					
23.					
24.					
25.					
26.					
27.					
28.					
29.					
30.					

1B
SEMIVOLATILE ORGANICS ANALYSIS DATA SHEET

EPA SAMPLE NO. 0954

SBLKY9

Lab Name: PEI Contract: 68-D9-0037

Lab Code: PEI Case No.: 16377 SAS No.: SDG No.: EHM01

Matrix: (soil/water) SOIL Lab Sample ID: SBLKY9

Sample wt/vol: 30.0 (g/mL) G Lab File ID: SBLKY9

Level: (low/med) LOW Date Received: 0/ 0/ 0

% Moisture: not dec. 0. dec.____ Date Extracted: 5/22/91

Extraction: (SepF/Cont/Sonc) SONC Date Analyzed: 6/12/91

GPC Cleanup: (Y/N) Y pH: 7.0 Dilution Factor: 1.00

CAS NO.	COMPOUND	CONCENTRATION UNITS: (ug/L or ug/Kg) UG/KG	Q
108-95-2	Phenol	660.	U
111-44-4	bis(2-Chloroethyl)ether	660.	U
95-57-8	2-Chlorophenol	660.	U
541-73-1	1,3-Dichlorobenzene	660.	U
106-46-7	1,4-Dichlorobenzene	660.	U
100-51-6	Benzyl alcohol	660.	U
95-50-1	1,2-Dichlorobenzene	660.	U
95-48-7	2-Methylphenol	660.	U
108-60-1	bis(2-Chloroisopropyl)ether	660.	U
106-44-5	4-Methylphenol	660.	U
621-64-7	N-Nitroso-di-n-propylamine	660.	U
67-72-1	Hexachloroethane	660.	U
98-95-3	Nitrobenzene	660.	U
78-59-1	Isophorone	660.	U
88-75-5	2-Nitrophenol	660.	U
105-67-9	2,4-Dimethylphenol	660.	U
65-85-0	Benzoic acid	3200.	U
111-91-1	bis(2-Chloroethoxy)methane	660.	U
120-83-2	2,4-Dichlorophenol	660.	U
120-82-1	1,2,4-Trichlorobenzene	660.	U
91-20-3	Naphthalene	660.	U
106-47-8	4-Chloroaniline	660.	U
87-68-3	Hexachlorobutadiene	660.	U
59-50-7	4-Chloro-3-methylphenol	660.	U
91-57-6	2-Methylnaphthalene	660.	U
77-47-4	Hexachlorocyclopentadiene	660.	U
88-06-2	2,4,6-Trichlorophenol	660.	U
95-95-4	2,4,5-Trichlorophenol	3200.	U
91-58-7	2-Chloronaphthalene	660.	U
88-74-4	2-Nitroaniline	3200.	U
131-11-3	Dimethylphthalate	660.	U
208-96-8	Acenaphthylene	660.	U
606-20-2	2,6-Dinitrotoluene	660.	U

1C
SEMIVOLATILE ORGANICS ANALYSIS DATA SHEET

EPA SAMPLE NO. 0955

SBLKY9

Lab Name: PEI Contract: 68-D9-0037

Lab Code: PEI Case No.: 16377 SAS No.: SDG No.: EHM01

Matrix: (soil/water) SOIL Lab Sample ID: SBLKY9

Sample wt/vol: 30.0 (g/mL) G Lab File ID: SBLKY9

Level: (low/med) LOW Date Received: 0/ 0/ 0

% Moisture: not dec. 0. dec.____ Date Extracted: 5/22/91

Extraction: (SepF/Cont/Sonc) SONC Date Analyzed: 6/12/91

GPC Cleanup: (Y/N) Y pH: 7.0 Dilution Factor: 1.00

CAS NO.	COMPOUND	CONCENTRATION UNITS: (ug/L or ug/Kg) UG/KG	Q
99-09-2	3-Nitroaniline	3200.	U
83-32-9	Acenaphthene	660.	U
51-28-5	2,4-Dinitrophenol	3200.	U
100-02-7	4-Nitrophenol	3200.	U
132-64-9	Dibenzofuran	660.	U
121-14-2	2,4-Dinitrotoluene	660.	U
84-66-2	Diethylphthalate	660.	U
7005-72-3	4-Chlorophenyl-phenylether	660.	U
86-73-7	Fluorene	660.	U
100-01-6	4-Nitroaniline	3200.	U
534-52-1	4,6-Dinitro-2-methylphenol	3200.	U
86-30-6	N-Nitrosodiphenylamine (1)	660.	U
101-55-3	4-Bromophenyl-phenylether	660.	U
118-74-1	Hexachlorobenzene	660.	U
87-86-5	Pentachlorophenol	3200.	U
85-01-8	Phenanthrene	660.	U
120-12-7	Anthracene	660.	U
84-74-2	Di-n-butylphthalate	660.	U
206-44-0	Fluoranthene	660.	U
129-00-0	Pyrene	660.	U
85-68-7	Butylbenzylphthalate	660.	U
91-94-1	3,3'-Dichlorobenzidine	1300.	U
56-55-3	Benzo(a)anthracene	660.	U
218-01-9	Chrysene	660.	U
117-81-7	bis(2-Ethylhexyl)phthalate	660.	U
117-84-0	Di-n-octylphthalate	660.	U
205-99-2	Benzo(b)fluoranthene	660.	U
207-08-9	Benzo(k)fluoranthene	660.	U
50-32-8	Benzo(a)pyrene	660.	U
193-39-5	Indeno(1,2,3-cd)pyrene	660.	U
53-70-3	Dibenz(a,h)anthracene	660.	U
191-24-2	Benzo(g,h,i)perylene	660.	U

(1) - Cannot be separated from diphenylamine

1F

SEMIVOLATILE ORGANICS ANALYSIS DATA SHEET
TENTATIVELY IDENTIFIED COMPOUNDS

EPA SAMPLE NO. 0956

SBLKY9

Lab Name: PEI Contract: 68-D9-0037

Lab Code: PEI Case No.: 16377 SAS No.: SDG No.: EHM01

Matrix: (soil/water) SOIL Lab Sample ID: SBLKY9

Sample wt/vol: 30.0 (g/mL) G Lab File ID: SBLKY9

Level: (low/med) LOW Date Received: 0/ 0/ 0

% Moisture: not dec. 0. dec._____ Date Extracted: 5/22/91

Extraction: (SepF/Cont/Sonc) SONC Date Analyzed: 6/12/91

GPC Cleanup: (Y/N) Y pH: 7.0 Dilution Factor: 1.00

Number TICs found: 1

CONCENTRATION UNITS:
(ug/L or ug/Kg) UG/KG

	CAS NUMBER	COMPOUND NAME	RT	EST. CONC.	Q
1.	- -	UNKNOWN	31.15	3000.	J
2.					
3.					
4.					
5.					
6.					
7.					
8.					
9.					
10.					
11.					
12.					
13.					
14.					
15.					
16.					
17.					
18.					
19.					
20.					
21.					
22.					
23.					
24.					
25.					
26.					
27.					
28.					
29.					
30.					

1B
SEMIVOLATILE ORGANICS ANALYSIS DATA SHEET

EPA SAMPLE NO.

SBLKB7

Lab Name: PEI Contract: 68-D9-0037

Lab Code: PEI Case No.: 16377 SAS No.: SDG No.: EHM01

Matrix: (soil/water) WATER Lab Sample ID: SBLKB7

Sample wt/vol: 1000.0 (g/mL) ML Lab File ID: SBLKB7

Level: (low/med) LOW Date Received: 0/ 0/ 0

% Moisture: not dec. 100. dec.____ Date Extracted: 6/15/91

Extraction: (SepF/Cont/Sonc) SEPF Date Analyzed: 6/16/91

GPC Cleanup: (Y/N) N pH: 5.0 Dilution Factor: 1.00

CAS NO.	COMPOUND	CONCENTRATION UNITS: (ug/L or ug/Kg) UG/L	Q
108-95-2	Phenol	10.	U
111-44-4	bis(2-Chloroethyl)ether	10.	U
95-57-8	2-Chlorophenol	10.	U
541-73-1	1,3-Dichlorobenzene	10.	U
106-46-7	1,4-Dichlorobenzene	10.	U
100-51-6	Benzyl alcohol	10.	U
95-50-1	1,2-Dichlorobenzene	10.	U
95-48-7	2-Methylphenol	10.	U
108-60-1	bis(2-Chloroisopropyl)ether	10.	U
106-44-5	4-Methylphenol	10.	U
621-64-7	N-Nitroso-di-n-propylamine	10.	U
67-72-1	Hexachloroethane	10.	U
98-95-3	Nitrobenzene	10.	U
78-59-1	Isophorone	10.	U
88-75-5	2-Nitrophenol	10.	U
105-67-9	2,4-Dimethylphenol	10.	U
65-85-0	Benzoic acid	50.	U
111-91-1	bis(2-Chloroethoxy)methane	10.	U
120-83-2	2,4-Dichlorophenol	10.	U
120-82-1	1,2,4-Trichlorobenzene	10.	U
91-20-3	Naphthalene	10.	U
106-47-8	4-Chloroaniline	10.	U
87-68-3	Hexachlorobutadiene	10.	U
59-50-7	4-Chloro-3-methylphenol	10.	U
91-57-6	2-Methylnaphthalene	10.	U
77-47-4	Hexachlorocyclopentadiene	10.	U
88-06-2	2,4,6-Trichlorophenol	10.	U
95-95-4	2,4,5-Trichlorophenol	50.	U
91-58-7	2-Chloronaphthalene	10.	U
88-74-4	2-Nitroaniline	50.	U
131-11-3	Dimethylphthalate	10.	U
208-96-8	Acenaphthylene	10.	U
606-20-2	2,6-Dinitrotoluene	10.	U

1C
SEMIVOLATILE ORGANICS ANALYSIS DATA SHEET

EPA SAMPLE NO.

SBLKB7

0968

Lab Name: PEI Contract: 68-D9-0037

Lab Code: PEI Case No.: 16377 SAS No.: SDG No.: EHM01

Matrix: (soil/water) WATER Lab Sample ID: SBLKB7

Sample wt/vol: 1000.0 (g/mL) ML Lab File ID: SBLKB7

Level: (low/med) LOW Date Received: 0/ 0/ 0

% Moisture: not dec. 100. dec._____ Date Extracted: 6/15/91

Extraction: (SepF/Cont/Sonc) SEPF Date Analyzed: 6/16/91

GPC Cleanup: (Y/N) N pH: 5.0 Dilution Factor: 1.00

CAS NO.	COMPOUND	CONCENTRATION UNITS: (ug/L or ug/Kg) UG/L	Q
99-09-2	3-Nitroaniline	50.	U
83-32-9	Acenaphthene	10.	U
51-28-5	2,4-Dinitrophenol	50.	U
100-02-7	4-Nitrophenol	50.	U
132-64-9	Dibenzofuran	10.	U
121-14-2	2,4-Dinitrotoluene	10.	U
84-66-2	Diethylphthalate	10.	U
7005-72-3	4-Chlorophenyl-phenylether	10.	U
86-73-7	Fluorene	10.	U
100-01-6	4-Nitroaniline	50.	U
534-52-1	4,6-Dinitro-2-methylphenol	50.	U
86-30-6	N-Nitrosodiphenylamine (1)	10.	U
101-55-3	4-Bromophenyl-phenylether	10.	U
118-74-1	Hexachlorobenzene	10.	U
87-86-5	Pentachlorophenol	50.	U
85-01-8	Phenanthrene	10.	U
120-12-7	Anthracene	10.	U
84-74-2	Di-n-butylphthalate	10.	U
206-44-0	Fluoranthene	10.	U
129-00-0	Pyrene	10.	U
85-68-7	Butylbenzylphthalate	10.	U
91-94-1	3,3'-Dichlorobenzidine	20.	U
56-55-3	Benzo(a)anthracene	10.	U
218-01-9	Chrysene	10.	U
117-81-7	bis(2-Ethylhexyl)phthalate	71.	
117-84-0	Di-n-octylphthalate	10.	U
205-99-2	Benzo(b)fluoranthene	10.	U
207-08-9	Benzo(k)fluoranthene	10.	U
50-32-8	Benzo(a)pyrene	10.	U
193-39-5	Indeno(1,2,3-cd)pyrene	10.	U
53-70-3	Dibenz(a,h)anthracene	10.	U
191-24-2	Benzo(g,h,i)perylene	10.	U

(1) - Cannot be separated from diphenylamine

1F

SEMIVOLATILE ORGANICS ANALYSIS DATA SHEET
TENTATIVELY IDENTIFIED COMPOUNDS

EPA SAMPLE NO. 0967

SBLKB7

Lab Name: PEI Contract: 68-D9-0037

Lab Code: PEI Case No.: 16377 SAS No.: SDG No.: EHM01

Matrix: (soil/water) WATER Lab Sample ID: SBLKB7

Sample wt/vol: 1000.0 (g/mL) ML Lab File ID: SBLKB7

Level: (low/med) LOW Date Received: 0/ 0/ 0

% Moisture: not dec. 100. dec._____ Date Extracted: 6/15/91

Extraction: (SepF/Cont/Sonc) SEPF Date Analyzed: 6/16/91

GPC Cleanup: (Y/N) N pH: 5.0 Dilution Factor: 1.00

Number TICs found: 1

CONCENTRATION UNITS:
(ug/L or ug/Kg) UG/L

	CAS NUMBER	COMPOUND NAME	RT	EST. CONC.	Q
1.	- -	UNKNOWN	30.93	10.	J
2.					
3.					
4.					
5.					
6.					
7.					
8.					
9.					
10.					
11.					
12.					
13.					
14.					
15.					
16.					
17.					
18.					
19.					
20.					
21.					
22.					
23.					
24.					
25.					
26.					
27.					
28.					
29.					
30.					

1B
SEMIVOLATILE ORGANICS ANALYSIS DATA SHEET

EPA SAMPLE NO. 0943

SBLKY7

Lab Name: PEI Contract: 68-D9-0037

Lab Code: PEI Case No.: 16377 SAS No.: SDG No.: EHM01

Matrix: (soil/water) SOIL Lab Sample ID: SBLKY7

Sample wt/vol: 30.0 (g/mL) G Lab File ID: SBLKY7

Level: (low/med) LOW Date Received: 0/ 0/ 0

% Moisture: not dec. 0. dec.____ Date Extracted: 5/19/91

Extraction: (SepF/Cont/Sonc) SONC Date Analyzed: 6/13/91

GPC Cleanup: (Y/N) Y pH: 5.0 Dilution Factor: 1.00

CAS NO.	COMPOUND	CONCENTRATION UNITS: (ug/L or ug/Kg) UG/KG	Q
108-95-2	Phenol	660.	U
111-44-4	bis(2-Chloroethyl)ether	660.	U
95-57-8	2-Chlorophenol	660.	U
541-73-1	1,3-Dichlorobenzene	660.	U
106-46-7	1,4-Dichlorobenzene	660.	U
100-51-6	Benzyl alcohol	660.	U
95-50-1	1,2-Dichlorobenzene	660.	U
95-48-7	2-Methylphenol	660.	U
108-60-1	bis(2-Chloroisopropyl)ether	660.	U
106-44-5	4-Methylphenol	660.	U
621-64-7	N-Nitroso-di-n-propylamine	660.	U
67-72-1	Hexachloroethane	660.	U
98-95-3	Nitrobenzene	660.	U
78-59-1	Isophorone	660.	U
88-75-5	2-Nitrophenol	660.	U
105-67-9	2,4-Dimethylphenol	660.	U
65-85-0	Benzoic acid	3200.	U
111-91-1	bis(2-Chloroethoxy)methane	660.	U
120-83-2	2,4-Dichlorophenol	660.	U
120-82-1	1,2,4-Trichlorobenzene	660.	U
91-20-3	Naphthalene	660.	U
106-47-8	4-Chloroaniline	660.	U
87-68-3	Hexachlorobutadiene	660.	U
59-50-7	4-Chloro-3-methylphenol	660.	U
91-57-6	2-Methylnaphthalene	660.	U
77-47-4	Hexachlorocyclopentadiene	660.	U
88-06-2	2,4,6-Trichlorophenol	660.	U
95-95-4	2,4,5-Trichlorophenol	3200.	U
91-58-7	2-Chloronaphthalene	660.	U
88-74-4	2-Nitroaniline	3200.	U
131-11-3	Dimethylphthalate	660.	U
208-96-8	Acenaphthylene	660.	U
606-20-2	2,6-Dinitrotoluene	660.	U

1C

SEMIVOLATILE ORGANICS ANALYSIS DATA SHEET

EPA SAMPLE NO.

SBLKY7

0944

Lab Name: PEI Contract: 68-D9-0037

Lab Code: PEI Case No.: 16377 SAS No.: SDG No.: EHM01

Matrix: (soil/water) SOIL Lab Sample ID: SBLKY7

Sample wt/vol: 30.0 (g/mL) G Lab File ID: SBLKY7

Level: (low/med) LOW Date Received: 0/ 0/ 0

% Moisture: not dec. 0. dec._____ Date Extracted: 5/19/91

Extraction: (SepF/Cont/Sonc) SONC Date Analyzed: 6/13/91

GPC Cleanup: (Y/N) Y pH: 5.0 Dilution Factor: 1.00

CAS NO.	COMPOUND	CONCENTRATION UNITS: (ug/L or ug/Kg) UG/KG	Q
99-09-2	3-Nitroaniline	3200.	U
83-32-9	Acenaphthene	660.	U
51-28-5	2,4-Dinitrophenol	3200.	U
100-02-7	4-Nitrophenol	3200.	U
132-64-9	Dibenzofuran	660.	U
121-14-2	2,4-Dinitrotoluene	660.	U
84-66-2	Diethylphthalate	660.	U
7005-72-3	4-Chlorophenyl-phenylether	660.	U
86-73-7	Fluorene	660.	U
100-01-6	4-Nitroaniline	3200.	U
534-52-1	4,6-Dinitro-2-methylphenol	3200.	U
86-30-6	N-Nitrosodiphenylamine (1)	660.	U
101-55-3	4-Bromophenyl-phenylether	660.	U
118-74-1	Hexachlorobenzene	660.	U
87-86-5	Pentachlorophenol	3200.	U
85-01-8	Phenanthrene	660.	U
120-12-7	Anthracene	660.	U
84-74-2	Di-n-butylphthalate	660.	U
206-44-0	Fluoranthene	660.	U
129-00-0	Pyrene	660.	U
85-68-7	Butylbenzylphthalate	660.	U
91-94-1	3,3'-Dichlorobenzidine	1300.	U
56-55-3	Benzo(a)anthracene	660.	U
218-01-9	Chrysene	660.	U
117-81-7	bis(2-Ethylhexyl)phthalate	660.	U
117-84-0	Di-n-octylphthalate	660.	U
205-99-2	Benzo(b)fluoranthene	660.	U
207-08-9	Benzo(k)fluoranthene	660.	U
50-32-8	Benzo(a)pyrene	660.	U
193-39-5	Indeno(1,2,3-cd)pyrene	660.	U
53-70-3	Dibenz(a,h)anthracene	660.	U
191-24-2	Benzo(g,h,i)perylene	660.	U

(1) - Cannot be separated from diphenylamine

1D
PESTICIDE ORGANICS ANALYSIS DATA SHEET

EPA SAMPLE NO.

PBLKY7

Lab Name: PEI Contract: 68-D9-0037

Lab Code: PEI Case No.: 16377 SAS No.: SDG No.: EHM01

Matrix: (soil/water) SOIL Lab Sample ID: PBLKY7

Sample wt/vol: 30.0 (g/mL) G Lab File ID: YWPBY007

Level: (low/med) LOW Date Received: 0/ 0/ 0

% Moisture: not dec. 0. dec._____ Date Extracted: 5/19/91

Extraction: (SepF/Cont/Sonc) SONC Date Analyzed: 5/31/91

GPC Cleanup: (Y/N) Y pH: 7.0 Dilution Factor: 1.00

CAS NO.	COMPOUND	CONCENTRATION UNITS: (ug/L or ug/Kg) UG/KG	Q
319-84-6	alpha-BHC	16.	U
319-85-7	beta-BHC	16.	U
319-86-8	delta-BHC	16.	U
58-89-9	gamma-BHC	16.	U
76-44-8	Heptachlor	16.	U
309-00-2	Aldrin	16.	U
1024-57-3	Heptachlor epoxide	16.	U
959-98-8	Endosulfan I	16.	U
60-57-1	Dieldrin	32.	U
72-55-9	4,4'-DDE	32.	U
72-20-8	Endrin	32.	U
33213-65-9	Endosulfan II	32.	U
72-54-8	4,4'-DDD	32.	U
1031-07-8	Endosulfan sulfate	32.	U
50-29-3	4,4'-DDT	32.	U
72-43-5	Methoxychlor	160.	U
53494-70-5	Endrin ketone	32.	U
5103-71-9	alpha-Chlordane	160.	U
5103-74-2	gamma-Chlordane	160.	U
8001-35-2	Toxaphene	320.	U
12674-11-2	Aroclor-1016	160.	U
11104-28-2	Aroclor-1221	160.	U
11141-16-5	Aroclor-1232	160.	U
53469-21-9	Aroclor-1242	160.	U
12672-29-6	Aroclor-1248	160.	U
11097-69-1	Aroclor-1254	320.	U
11096-82-5	Aroclor-1260	320.	U

1D
PESTICIDE ORGANICS ANALYSIS DATA SHEET

EPA SAMPLE NO.

PBLKX5

Lab Name: PEI Contract: 68-D9-0037

Lab Code: PEI Case No.: 16377 SAS No.: SDG No.: EHM01

Matrix: (soil/water) WATER Lab Sample ID: PBLKX5

Sample wt/vol: 1000.0 (g/mL) ML Lab File ID: YWPRX005

Level: (low/med) LOW Date Received: 0/ 0/ 0

% Moisture: not dec. 100. dec._____ Date Extracted: 5/14/91

Extraction: (SepF/Cont/Sonc) CONT Date Analyzed: 5/28/91

GPC Cleanup: (Y/N) N pH: 7.0 Dilution Factor: 1.00

CAS NO.	COMPOUND	CONCENTRATION UNITS: (ug/L or ug/Kg) UG/L	Q
319-84-6	alpha-BHC	.050	U
319-85-7	beta-BHC	.050	U
319-86-8	delta-BHC	.050	U
58-89-9	gamma-BHC	.050	U
76-44-8	Heptachlor	.050	U
309-00-2	Aldrin	.050	U
1024-57-3	Heptachlor epoxide	.050	U
959-98-8	Endosulfan I	.050	U
60-57-1	Dieldrin	.10	U
72-55-9	4,4'-DDE	.10	U
72-20-8	Endrin	.10	U
33213-65-9	Endosulfan II	.10	U
72-54-8	4,4'-DDD	.10	U
1031-07-8	Endosulfan sulfate	.10	U
50-29-3	4,4'-DDT	.10	U
72-43-5	Methoxychlor	.50	U
53494-70-5	Endrin ketone	.10	U
5103-71-9	alpha-Chlordane	.50	U
5103-74-2	gamma-Chlordane	.50	U
8001-35-2	Toxaphene	1.0	U
12674-11-2	Aroclor-1016	.50	U
11104-28-2	Aroclor-1221	.50	U
11141-16-5	Aroclor-1232	.50	U
53469-21-9	Aroclor-1242	.50	U
12672-29-6	Aroclor-1248	.50	U
11097-69-1	Aroclor-1254	1.0	U
11096-82-5	Aroclor-1260	1.0	U

2337
EPA SAMPLE NO.

1D
PESTICIDE ORGANICS ANALYSIS DATA SHEET

PBLKY8

Lab Name: PEI Contract: 68-D9-0037

Lab Code: PEI Case No.: 16377 SAS No.: SDG No.: EHM01

Matrix: (soil/water) SOIL Lab Sample ID: PBLKY8

Sample wt/vol: 30.0 (g/mL) G Lab File ID: YWPBY008

Level: (low/med) LOW Date Received: 0/ 0/ 0

% Moisture: not dec. 0. dec._____ Date Extracted: 5/19/91

Extraction: (SepF/Cont/Sonc) SONC Date Analyzed: 5/31/91

GPC Cleanup: (Y/N) Y pH: 7.0 Dilution Factor: 1.00

CAS NO.	COMPOUND	CONCENTRATION UNITS: (ug/L or ug/Kg) UG/KG	Q
319-84-6	alpha-BHC	16.	U
319-85-7	beta-BHC	16.	U
319-86-8	delta-BHC	16.	U
58-89-9	gamma-BHC	16.	U
76-44-8	Heptachlor	16.	U
309-00-2	Aldrin	16.	U
1024-57-3	Heptachlor epoxide	16.	U
959-98-8	Endosulfan I	16.	U
60-57-1	Dieldrin	32.	U
72-55-9	4,4'-DDE	32.	U
72-20-8	Endrin	32.	U
33213-65-9	Endosulfan II	32.	U
72-54-8	4,4'-DDD	32.	U
1031-07-8	Endosulfan sulfate	32.	U
50-29-3	4,4'-DDT	32.	U
72-43-5	Methoxychlor	160.	U
53494-70-5	Endrin ketone	32.	U
5103-71-9	alpha-Chlordane	160.	U
5103-74-2	gamma-Chlordane	160.	U
8001-35-2	Toxaphene	320.	U
12674-11-2	Aroclor-1016	160.	U
11104-28-2	Aroclor-1221	160.	U
11141-16-5	Aroclor-1232	160.	U
53469-21-9	Aroclor-1242	160.	U
12672-29-6	Aroclor-1248	160.	U
11097-69-1	Aroclor-1254	320.	U
11096-82-5	Aroclor-1260	320.	U

0046

1A
VOLATILE ORGANICS ANALYSIS DATA SHEET

EPA SAMPLE NO.

EHM01

Lab Name: PEI Contract: 68-D9-0037

Lab Code: PEI Case No.: 16377 SAS No.: SDG No.: EHM01

Matrix: (soil/water) WATER Lab Sample ID: X1-05-070-01B

Sample wt/vol: .020 (g/ml) ML Lab File ID: EHM01RE

Level: (low/med) LOW Date Received: 5/ 9/91

% Moisture: not dec. 100. Date Analyzed: 5/22/91

Column: (pack/cap) PACK Dilution Factor: 1.00

CAS NO.	COMPOUND	CONCENTRATION UNITS: (ug/L or ug/Kg) UG/L	Q
74-87-3	CHLOROMETHANE	2500.	U
74-83-9	BROMOMETHANE	2500.	U
75-01-4	VINYL CHLORIDE	2500.	U
75-00-3	CHLOROETHANE	2500.	U
75-09-2	METHYLENE CHLORIDE	4100.	B
67-64-1	ACETONE	6400.	
75-15-0	CARBON DISULFIDE	1300.	U
75-35-4	1,1-DICHLOROETHENE	1300.	U
75-34-3	1,1-DICHLOROETHANE	1300.	U
540-59-0	1,2-DICHLOROETHENE (TOTAL)	1300.	U
67-66-3	CHLOROFORM	1300.	U
107-06-2	1,2-DICHLOROETHANE	1300.	U
78-93-3	2-BUTANONE	3400.	
71-55-6	1,1,1-TRICHLOROETHANE	1300.	U
56-23-5	CARBON TETRACHLORIDE	1300.	U
108-05-4	VINYL ACETATE	2500.	U
75-27-4	BROMODICHLOROMETHANE	1300.	U
78-87-5	1,2-DICHLOROPROPANE	1300.	U
10061-01-5	CIS-1,3-DICHLOROPROPENE	1300.	U
79-01-6	TRICHLOROETHENE	1300.	U
124-48-1	DIBROMOCHLOROMETHANE	1300.	U
79-00-5	1,1,2-TRICHLOROETHANE	1300.	U
71-43-2	BENZENE	1300.	U
10061-02-6	TRANS-1,3-DICHLOROPROPENE	1300.	U
75-25-2	BROMOFORM	1300.	U
108-10-1	4-METHYL-2-PENTANONE	10000.	
591-78-6	2-HEXANONE	2500.	U
127-18-4	TETRACHLOROETHENE	1300.	U
79-34-5	1,1,2,2-TETRACHLOROETHANE	1300.	U
108-88-3	TOLUENE	1800.	
108-90-7	CHLOROBENZENE	1300.	U
100-41-4	ETHYLBENZENE	1300.	U
100-42-5	STYRENE	1300.	U
1330-20-7	XYLENES (TOTAL)	1300.	U

Data resubmitted 9-17-91
Dr Payne

1E

VOLATILE ORGANICS ANALYSIS DATA SHEET
TENTATIVELY IDENTIFIED COMPOUNDS

EPA SAMPLE NO. 0047

EHM01

Lab Name: PEI Contract: 68-D9-0037

Lab Code: PEI Case No.: 16377 SAS No.: SDG No.: EHM01

Matrix: (soil/water) WATER Lab Sample ID: X1-05-070-01B

Sample wt/vol: .020 (g/ml) ML Lab File ID: EHM01RE

Level: (low/med) LOW Date Received: 5/ 9/91

% Moisture: not dec. 100. Date Analyzed: 5/22/91

Column: (pack/cap) PACK Dilution Factor: 1.00

Number TICs found: 1

CONCENTRATION UNITS:
(TOTAL NG/TUBE) UG/L

	CAS NUMBER	COMPOUND NAME	RT	EST. CONC.	Q
1.	- -	UNKNOWN DICHLOROBENZENE	32.43	3000.	J
2.					
3.					
4.					
5.					
6.					
7.					
8.					
9.					
10.					
11.					
12.					
13.					
14.					
15.					
16.					
17.					
18.					
19.					
20.					
21.					
22.					
23.					
24.					
25.					
26.					
27.					
28.					
29.					
30.					

Data Resubmitted 9-17-91 D Payne

1A

EPA SAMPLE NO. 0046

VOLATILE ORGANICS ANALYSIS DATA SHEET

Replaced by data submitted 9-17-91 D. Payne

EHM01

Lab Name: PEI Contract: 68-D9-0037

Lab Code: PEI Case No.: 16877 SAS No.: SDG No.: EHM01

Matrix: (soil/water) WATER Lab Sample ID: X1-05-070-01B

Sample wt/vol: 5.000 (g/mL) ML Lab File ID: EHM01RE

Level: (low/med) LOW Date Received: 5/ 9/91

% Moisture: not dec. 100. Date Analyzed: 5/22/91

Column: (pack/cap) PACK Dilution Factor: 1.00

CAS NO.	COMPOUND	CONCENTRATION UNITS: (ug/L or ug/Kg) UG/L	Q
74-87-3	CHLOROMETHANE	10.	U
74-83-9	BROMOMETHANE	10.	U
75-01-4	VINYL CHLORIDE	10.	U
75-00-3	CHLOROETHANE	10.	U
75-09-2	METHYLENE CHLORIDE	16.	~~B~~ U KM 7/3/91
67-64-1	ACETONE	25.	
75-15-0	CARBON DISULFIDE	5.	U
75-35-4	1,1-DICHLOROETHENE	5.	U
75-34-3	1,1-DICHLOROETHANE	5.	U
540-59-0	1,2-DICHLOROETHENE (TOTAL)	5.	U
67-66-3	CHLOROFORM	5.	U
107-06-2	1,2-DICHLOROETHANE	5.	U
78-93-3	2-BUTANONE	14.	
71-55-6	1,1,1-TRICHLOROETHANE	5.	U
56-23-5	CARBON TETRACHLORIDE	5.	U
108-05-4	VINYL ACETATE	10.	U
75-27-4	BROMODICHLOROMETHANE	5.	U
78-87-5	1,2-DICHLOROPROPANE	5.	U
10061-01-5	CIS-1,3-DICHLOROPROPENE	5.	U
79-01-6	TRICHLOROETHENE	5.	U
124-48-1	DIBROMOCHLOROMETHANE	5.	U
79-00-5	1,1,2-TRICHLOROETHANE	5.	U
71-43-2	BENZENE	5.	U
10061-02-6	TRANS-1,3-DICHLOROPROPENE	5.	U
75-25-2	BROMOFORM	5.	U
108-10-1	4-METHYL-2-PENTANONE	41.	
591-78-6	2-HEXANONE	10.	U
127-18-4	TETRACHLOROETHENE	5.	U
79-34-5	1,1,2,2-TETRACHLOROETHANE	5.	U
108-88-3	TOLUENE	7.	
108-90-7	CHLOROBENZENE	5.	U
100-41-4	ETHYLBENZENE	5.	U
100-42-5	STYRENE	5.	U
1330-20-7	XYLENES (TOTAL)	5.	U

Replaced by Data submittal 6-17-91

1E

VOLATILE ORGANICS ANALYSIS DATA SHEET
TENTATIVELY IDENTIFIED COMPOUNDS

EPA SAMPLE NO. 0047

EHM01

Lab Name: PEI Contract: 68-D9-0037

Lab Code: PEI Case No.: 16377 SAS No.: SDG No.: EHM01

Matrix: (soil/water) WATER Lab Sample ID: X1-05-070-01B

Sample wt/vol: 5.000 (g/mL) ML Lab File ID: EHM01RE

Level: (low/med) LOW Date Received: 5/ 9/91

% Moisture: not dec. 100. Date Analyzed: 5/22/91

Column: (pack/cap) PACK Dilution Factor: 1.00

Number TICs found: 1

CONCENTRATION UNITS:
(ug/L or ug/Kg) UG/L

	CAS NUMBER	COMPOUND NAME	RT	EST. CONC.	Q
1.	- -	UNKNOWN DICHLOROBENZENE	32.43	10.	J
2.					
3.					
4.					
5.					
6.					
7.					
8.					
9.					
10.					
11.					
12.					
13.					
14.					
15.					
16.					
17.					
18.					
19.					
20.					
21.					
22.					
23.					
24.					
25.					
26.					
27.					
28.					
29.					
30.					

1A
VOLATILE ORGANICS ANALYSIS DATA SHEET

EPA SAMPLE NO. 0058

EHM02

Lab Name: PEI Contract: 68-D9-0037

Lab Code: PEI Case No.: 16377 SAS No.: SDG No.: EHM01

Matrix: (soil/water) WATER Lab Sample ID: X1-05-070-02B

Sample wt/vol: 5.000 (g/mL) ML Lab File ID: EHM02

Level: (low/med) LOW Date Received: 5/ 9/91

% Moisture: not dec. 100. Date Analyzed: 5/19/91

Column: (pack/cap) PACK Dilution Factor: 1.00

CAS NO.	COMPOUND	CONCENTRATION UNITS: (ug/L or ug/Kg) UG/L	Q
74-87-3	CHLOROMETHANE	10.	U
74-83-9	BROMOMETHANE	10.	U
75-01-4	VINYL CHLORIDE	10.	U
75-00-3	CHLOROETHANE	10.	U
75-09-2	METHYLENE CHLORIDE	5.	U
67-64-1	ACETONE	11000.	E
75-15-0	CARBON DISULFIDE	5.	U
75-35-4	1,1-DICHLOROETHENE	5.	U
75-34-3	1,1-DICHLOROETHANE	5.	U
540-59-0	1,2-DICHLOROETHENE (TOTAL)	5.	U
67-66-3	CHLOROFORM	5.	U
107-06-2	1,2-DICHLOROETHANE	5.	U
78-93-3	2-BUTANONE	19000.	E
71-55-6	1,1,1-TRICHLOROETHANE	5.	U
56-23-5	CARBON TETRACHLORIDE	5.	U
108-05-4	VINYL ACETATE	10.	U
75-27-4	BROMODICHLOROMETHANE	5.	U
78-87-5	1,2-DICHLOROPROPANE	5.	U
10061-01-5	CIS-1,3-DICHLOROPROPENE	5.	U
79-01-6	TRICHLOROETHENE	5.	U
124-48-1	DIBROMOCHLOROMETHANE	5.	U
79-00-5	1,1,2-TRICHLOROETHANE	5.	U
71-43-2	BENZENE	69.	
10061-02-6	TRANS-1,3-DICHLOROPROPENE	5.	U
75-25-2	BROMOFORM	5.	U
108-10-1	4-METHYL-2-PENTANONE	10.	U
591-78-6	2-HEXANONE	10.	U
127-18-4	TETRACHLOROETHENE	5.	U
79-34-5	1,1,2,2-TETRACHLOROETHANE	5.	U
108-88-3	TOLUENE	530.	E
108-90-7	CHLOROBENZENE	320.	E
100-41-4	ETHYLBENZENE	2.	J
100-42-5	STYRENE	5.	U
1330-20-7	XYLENE (TOTAL)	16.	

1E
VOLATILE ORGANICS ANALYSIS DATA SHEET
TENTATIVELY IDENTIFIED COMPOUNDS

EPA SAMPLE NO. 0059

EHM02

Lab Name: PEI Contract: 68-D9-0037

Lab Code: PEI Case No.: 16377 SAS No.: SDG No.: EHM01

Matrix: (soil/water) WATER Lab Sample ID: X1-05-070-02B

Sample wt/vol: 5.000 (g/mL) ML Lab File ID: EHM02

Level: (low/med) LOW Date Received: 5/ 9/91

% Moisture: not dec. 100. Date Analyzed: 5/19/91

Column: (pack/cap) PACK Dilution Factor: 1.00

Number TICs found: 9

CONCENTRATION UNITS:
(ug/L or ug/Kg) UG/L

CAS NUMBER	COMPOUND NAME	RT	EST. CONC.	Q
1. - -	UNKNOWN	4.83	1000.	J
2. - -	UNKNOWN	6.17	500.	J
3. - -	UNKNOWN	10.37	4000.	J
4. - -	UNKNOWN	11.27	10.	J
5. - -	UNKNOWN	18.73	7000.	J
6. - -	UNKNOWN	19.38	600.	J
7. - -	UNKNOWN	20.47	20.	J
8. - -	UNKNOWN	25.57	2.	J
9. - -	UNKNOWN DICHLOROBENZENE	31.00	6.	J
10.				
11.				
12.				
13.				
14.				
15.				
16.				
17.				
18.				
19.				
20.				
21.				
22.				
23.				
24.				
25.				
26.				
27.				
28.				
29.				
30.				

0080

1A
VOLATILE ORGANICS ANALYSIS DATA SHEET

EPA SAMPLE NO.

EHM02 DL

Lab Name: PEI Contract: 68-D9-0037

Lab Code: PEI Case No.: 16377 SAS No.: SDG No.: EHM01

Matrix: (soil/water) WATER Lab Sample ID: X1-05-070-02B

Sample wt/vol: .050 (g/ml) ML Lab File ID: EHM02DL

Level: (low/med) LOW Date Received: 5/ 9/91

% Moisture: not dec. 100. Date Analyzed: 5/24/91

Column: (pack/cap) PACK Dilution Factor: 1.00

CAS NO.	COMPOUND	CONCENTRATION UNITS: (ug/L or ug/Kg) UG/L	Q
74-87-3	CHLOROMETHANE	1000.	U
74-83-9	BROMOMETHANE	1000.	U
75-01-4	VINYL CHLORIDE	1000.	U
75-00-3	CHLOROETHANE	1000.	U
75-09-2	METHYLENE CHLORIDE	1300.	D
67-64-1	ACETONE	2600.	B D
75-15-0	CARBON DISULFIDE	500.	U
75-35-4	1,1-DICHLOROETHENE	500.	U
75-34-3	1,1-DICHLOROETHANE	500.	U
540-59-0	1,2-DICHLOROETHENE (TOTAL)	500.	U
67-66-3	CHLOROFORM	500.	U
107-06-2	1,2-DICHLOROETHANE	500.	U
78-93-3	2-BUTANONE	4100.	D
71-55-6	1,1,1-TRICHLOROETHANE	500.	U
56-23-5	CARBON TETRACHLORIDE	500.	U
108-05-4	VINYL ACETATE	1000.	U
75-27-4	BROMODICHLOROMETHANE	500.	U
78-87-5	1,2-DICHLOROPROPANE	500.	U
10061-01-5	CIS-1,3-DICHLOROPROPENE	500.	U
79-01-6	TRICHLOROETHENE	500.	U
124-48-1	DIBROMOCHLOROMETHANE	500.	U
79-00-5	1,1,2-TRICHLOROETHANE	500.	U
71-43-2	BENZENE	500.	U
10061-02-6	TRANS-1,3-DICHLOROPROPENE	500.	U
75-25-2	BROMOFORM	500.	U
108-10-1	4-METHYL-2-PENTANONE	6600.	D
591-78-6	2-HEXANONE	1000.	U
127-18-4	TETRACHLOROETHENE	500.	U
79-34-5	1,1,2,2-TETRACHLOROETHANE	500.	U
108-88-3	TOLUENE	1200.	D
108-90-7	CHLOROBENZENE	500.	U
100-41-4	ETHYLBENZENE	500.	U
100-42-5	STYRENE	500.	U
1330-20-7	XYLENES (TOTAL)	500.	U

Data Resubmittal 9-17-91 D. Payne

0081

1E
VOLATILE ORGANICS ANALYSIS DATA SHEET
TENTATIVELY IDENTIFIED COMPOUNDS

EPA SAMPLE NO.

EHM02 DL

Lab Name: PEI Contract: 68-D9-0037

Lab Code: PEI Case No.: 16377 SAS No.: SDG No.: EHM01

Matrix: (soil/water) WATER Lab Sample ID: X1-05-070-02B

Sample wt/vol: .050 (g/ml) ML Lab File ID: EHM02DL

Level: (low/med) LOW Date Received: 5/ 9/91

% Moisture: not dec. 100. Date Analyzed: 5/24/91

Column: (pack/cap) PACK Dilution Factor: 1.00

Number TICs found: 4

CONCENTRATION UNITS:
(TOTAL NG/TUBE) UG/L

	CAS NUMBER	COMPOUND NAME	RT	EST. CONC.	Q
1.	- -	UNKNOWN AROMATIC	21.82	3000.	J
2.	- -	UNKNOWN	31.33	700.	J
3.	- -	UNKNOWN DICHLOROBENZENE	32.01	900.	J
4.	- -	UNKNOWN DICHLOROBENZENE	32.25	400.	J
5.					
6.					
7.					
8.					
9.					
10.					
11.					
12.					
13.					
14.					
15.					
16.					
17.					
18.					
19.					
20.					
21.					
22.					
23.					
24.					
25.					
26.					
27.					
28.					
29.					
30.					

Data Resubmitted 9-17-91 D Payne

1E

VOLATILE ORGANICS ANALYSIS DATA SHEET
TENTATIVELY IDENTIFIED COMPOUNDS

EPA SAMPLE NO.

0081

EHM02 DL

Replaced by Data Resubmittal 7-9-1991 D. Payne

Lab Name: PEI Contract: 68-D9-0037

Lab Code: PEI Case No.: 16877 SAS No.: SDG No.: EHM01

Matrix: (soil/water) WATER Lab Sample ID: X1-05-070-02B

Sample wt/vol: 5.000 (g/mL) ML Lab File ID: EHM02DL

Level: (low/med) LOW Date Received: 5/ 9/91

% Moisture: not dec. 100. Date Analyzed: 5/24/91

Column: (pack/cap) PACK Dilution Factor: 10.00

Number TICs found: 4

CONCENTRATION UNITS:
(ug/L or ug/Kg) UG/L

CAS NUMBER	COMPOUND NAME	RT	EST. CONC.	Q
1. - -	UNKNOWN AROMATIC	21.82	300.	J
2. - -	UNKNOWN	31.33	70.	J
3. - -	UNKNOWN DICHLOROBENZENE	32.01	90.	J
4. - -	UNKNOWN DICHLOROBENZENE	32.26	40.	J
5.				
6.				
7.				
8.				
9.				
10.				
11.				
12.				
13.				
14.				
15.				
16.				
17.				
18.				
19.				
20.				
21.				
22.				
23.				
24.				
25.				
26.				
27.				
28.				
29.				
30.				

1A

VOLATILE ORGANICS ANALYSIS DATA SHEET

Replaced by Data Resubmittal 7-9-91

EPA SAMPLE NO.

EHM02 DL

Lab Name: PEI Contract: 68-D9-0037

Lab Code: PEI Case No.: 16377 SAS No.: SDG No.: EHM01

Matrix: (soil/water) WATER Lab Sample ID: X1-05-070-02B

Sample wt/vol: 5.000 (g/mL) ML Lab File ID: EHM02DL

Level: (low/med) LOW Date Received: 5/ 9/91

% Moisture: not dec. 100. Date Analyzed: 5/24/91

Column: (pack/cap) PACK Dilution Factor: 10.00

D Payne

CAS NO.	COMPOUND	CONCENTRATION UNITS: (ug/L or ug/Kg) UG/L	Q
74-87-3	CHLOROMETHANE	100.	U
74-83-9	BROMOMETHANE	100.	U
75-01-4	VINYL CHLORIDE	100.	U
75-00-3	CHLOROETHANE	100.	U
75-09-2	METHYLENE CHLORIDE	130.	D
67-64-1	ACETONE	260.	~~B~~ D U KM 7/3/91
75-15-0	CARBON DISULFIDE	50.	U
75-35-4	1,1-DICHLOROETHENE	50.	U
75-34-3	1,1-DICHLOROETHANE	50.	U
540-59-0	1,2-DICHLOROETHENE (TOTAL)	50.	U
67-66-3	CHLOROFORM	50.	U
107-06-2	1,2-DICHLOROETHANE	50.	U
78-93-3	2-BUTANONE	410.	D
71-55-6	1,1,1-TRICHLOROETHANE	50.	U
56-23-5	CARBON TETRACHLORIDE	50.	U
108-05-4	VINYL ACETATE	100.	U
75-27-4	BROMODICHLOROMETHANE	50.	U
78-87-5	1,2-DICHLOROPROPANE	50.	U
10061-01-5	CIS-1,3-DICHLOROPROPENE	50.	U
79-01-6	TRICHLOROETHENE	50.	U
124-48-1	DIBROMOCHLOROMETHANE	50.	U
79-00-5	1,1,2-TRICHLOROETHANE	50.	U
71-43-2	BENZENE	50.	U
10061-02-6	TRANS-1,3-DICHLOROPROPENE	50.	U
75-25-2	BROMOFORM	50.	U
108-10-1	4-METHYL-2-PENTANONE	660.	D
591-78-6	2-HEXANONE	100.	U
127-18-4	TETRACHLOROETHENE	50.	U
79-34-5	1,1,2,2-TETRACHLOROETHANE	50.	U
108-88-3	TOLUENE	120.	D
108-90-7	CHLOROBENZENE	50.	U
100-41-4	ETHYLBENZENE	50.	U
100-42-5	STYRENE	50.	U
1330-20-7	XYLENES (TOTAL)	50.	U

1A

VOLATILE ORGANICS ANALYSIS DATA SHEET

EPA SAMPLE NO. 0095

EHM03

Lab Name: PEI Contract: 68-D9-0037

Lab Code: PEI Case No.: 16377 SAS No.: SDG No.: EHM01

Matrix: (soil/water) WATER Lab Sample ID: X1-05-070-03B

Sample wt/vol: .005 (g/ml) ML Lab File ID: EHM03

Level: (low/med) LOW Date Received: 5/ 9/91

% Moisture: not dec. 100. Date Analyzed: 5/20/91

Column: (pack/cap) PACK Dilution Factor: 1.00

CAS NO.	COMPOUND	CONCENTRATION UNITS: (ug/L or ug/Kg) UG/L	Q
74-87-3	CHLOROMETHANE	10000.	U
74-83-9	BROMOMETHANE	10000.	U
75-01-4	VINYL CHLORIDE	10000.	U
75-00-3	CHLOROETHANE	10000.	U
75-09-2	METHYLENE CHLORIDE	12000.	B
67-64-1	ACETONE	10000.	U
75-15-0	CARBON DISULFIDE	5000.	U
75-35-4	1,1-DICHLOROETHENE	5000.	U
75-34-3	1,1-DICHLOROETHANE	5000.	U
540-59-0	1,2-DICHLOROETHENE (TOTAL)	5000.	U
67-66-3	CHLOROFORM	5000.	U
107-06-2	1,2-DICHLOROETHANE	5000.	U
78-93-3	2-BUTANONE	10000.	U
71-55-6	1,1,1-TRICHLOROETHANE	1200.	J
56-23-5	CARBON TETRACHLORIDE	5000.	U
108-05-4	VINYL ACETATE	10000.	U
75-27-4	BROMODICHLOROMETHANE	5000.	U
78-87-5	1,2-DICHLOROPROPANE	5000.	U
10061-01-5	CIS-1,3-DICHLOROPROPENE	5000.	U
79-01-6	TRICHLOROETHENE	5000.	U
124-48-1	DIBROMOCHLOROMETHANE	5000.	U
79-00-5	1,1,2-TRICHLOROETHANE	5000.	U
71-43-2	BENZENE	6500.	
10061-02-6	TRANS-1,3-DICHLOROPROPENE	5000.	U
75-25-2	BROMOFORM	5000.	U
108-10-1	4-METHYL-2-PENTANONE	10000.	U
591-78-6	2-HEXANONE	10000.	U
127-18-4	TETRACHLOROETHENE	5000.	U
79-34-5	1,1,2,2-TETRACHLOROETHANE	5000.	U
108-88-3	TOLUENE	5000.	U
108-90-7	CHLOROBENZENE	140000.	
100-41-4	ETHYLBENZENE	5000.	U
100-42-5	STYRENE	5000.	U
1330-20-7	XYLENES (TOTAL)	5000.	U

Data Resubmittal of 9-17-91 D. Hague

0096

1E
VOLATILE ORGANICS ANALYSIS DATA SHEET
TENTATIVELY IDENTIFIED COMPOUNDS

EPA SAMPLE NO.

EHM03

Lab Name: PEI Contract: 68-D9-0037

Lab Code: PEI Case No.: 16377 SAS No.: SDG No.: EHM01

Matrix: (soil/water) WATER Lab Sample ID: X1-05-070-03B

Sample wt/vol: .005 (g/ml) ML Lab File ID: EHM03

Level: (low/med) LOW Date Received: 5/ 9/91

% Moisture: not dec. 100. Date Analyzed: 5/20/91

Column: (pack/cap) PACK Dilution Factor: 1.00

Number TICs found: 1

CONCENTRATION UNITS:
(TOTAL NG/TUBE) UG/L

CAS NUMBER	COMPOUND NAME	RT	EST. CONC.	Q
1. - -	UNKNOWN DICHLOROBENZENE	32.39	3000.	J
2.				
3.				
4.				
5.				
6.				
7.				
8.				
9.				
10.				
11.				
12.				
13.				
14.				
15.				
16.				
17.				
18.				
19.				
20.				
21.				
22.				
23.				
24.				
25.				
26.				
27.				
28.				
29.				
30.				

Data Resubmitted 9-17-91 D. Payne

Replaced by Data Resubmittal 5-9-17-91

EPA SAMPLE NO. 0095

VOLATILE ORGANICS ANALYSIS DATA SHEET

EHM03

Lab Name: PEI Contract: 68-D9-0037

Lab Code: PEI Case No.: 16377 SAS No.: SDG No.: EHM01

Matrix: (soil/water) WATER Lab Sample ID: X1-05-070-03B

Sample wt/vol: 5.000 (g/mL) ML Lab File ID: EHM03

Level: (low/med) LOW Date Received: 5/ 9/91

% Moisture: not dec. 100. Date Analyzed: 5/20/91

Column: (pack/cap) PACK Dilution Factor: 1.00

D. Payne

CAS NO.	COMPOUND	CONCENTRATION UNITS: (ug/L or ug/Kg) UG/L	Q
74-87-3	CHLOROMETHANE	10.	U
74-83-9	BROMOMETHANE	10.	U
75-01-4	VINYL CHLORIDE	10.	U
75-00-3	CHLOROETHANE	10.	U
75-09-2	METHYLENE CHLORIDE	12.	~~B~~ U KM 7/3/91
67-64-1	ACETONE	10.	U
75-15-0	CARBON DISULFIDE	5.	U
75-35-4	1,1-DICHLOROETHENE	5.	U
75-34-3	1,1-DICHLOROETHANE	5.	U
540-59-0	1,2-DICHLOROETHENE (TOTAL)	5.	U
67-66-3	CHLOROFORM	5.	U
107-06-2	1,2-DICHLOROETHANE	5.	U
78-93-3	2-BUTANONE	10.	U
71-55-6	1,1,1-TRICHLOROETHANE	1.	J
56-23-5	CARBON TETRACHLORIDE	5.	U
108-05-4	VINYL ACETATE	10.	U
75-27-4	BROMODICHLOROMETHANE	5.	U
78-87-5	1,2-DICHLOROPROPANE	5.	U
10061-01-5	CIS-1,3-DICHLOROPROPENE	5.	U
79-01-6	TRICHLOROETHENE	5.	U
124-48-1	DIBROMOCHLOROMETHANE	5.	U
79-00-5	1,1,2-TRICHLOROETHANE	5.	U
71-43-2	BENZENE	7.	
10061-02-6	TRANS-1,3-DICHLOROPROPENE	5.	U
75-25-2	BROMOFORM	5.	U
108-10-1	4-METHYL-2-PENTANONE	10.	U
591-78-6	2-HEXANONE	10.	U
127-18-4	TETRACHLOROETHENE	5.	U
79-34-5	1,1,2,2-TETRACHLOROETHANE	5.	U
108-88-3	TOLUENE	5.	U
108-90-7	CHLOROBENZENE	140.	
100-41-4	ETHYLBENZENE	5.	U
100-42-5	STYRENE	5.	U
1330-20-7	XYLENES (TOTAL)	5.	U

1E

VOLATILE ORGANICS ANALYSIS DATA SHEET
TENTATIVELY IDENTIFIED COMPOUNDS

EPA SAMPLE NO.

EHM03

0096

Lab Name: PEI Contract: 68-D9-0037

Lab Code: PEI Case No.: 16377 SAS No.: SDG No.: EHM01

Matrix: (soil/water) WATER Lab Sample ID: X1-05-070-03B

Sample wt/vol: 5.000 (g/ml) ML Lab File ID: EHM03

Level: (low/med) LOW Date Received: 5/ 9/91

% Moisture: not dec. 100. Date Analyzed: 5/20/91

Column: (pack/cap) PACK Dilution Factor: 1.00

Replaced by Data Resubmittal 7-9-17-91 D Payne

Number TICs found: 1

CONCENTRATION UNITS: (ug/L or ug/Kg) UG/L

CAS NUMBER	COMPOUND NAME	RT	EST. CONC.	Q
1. - -	UNKNOWN DICHLOROBENZENE	32.39	3.	J
2.				
3.				
4.				
5.				
6.				
7.				
8.				
9.				
10.				
11.				
12.				
13.				
14.				
15.				
16.				
17.				
18.				
19.				
20.				
21.				
22.				
23.				
24.				
25.				
26.				
27.				
28.				
29.				
30.				

1A
VOLATILE ORGANICS ANALYSIS DATA SHEET

EPA SAMPLE NO.

EHM04

Lab Name: PEI Contract: 68-D9-0037

Lab Code: PEI Case No.: 16377 SAS No.: SDG No.: EHM01

Matrix: (soil/water) WATER Lab Sample ID: X1-05-070-04B

Sample wt/vol: 5.000 (g/mL) ML Lab File ID: EHM04

Level: (low/med) LOW Date Received: 5/ 9/91

% Moisture: not dec. 100. Date Analyzed: 5/19/91

Column: (pack/cap) PACK Dilution Factor: 1.00

CAS NO.	COMPOUND	CONCENTRATION UNITS: (ug/L or ug/Kg) UG/L	Q
74-87-3	CHLOROMETHANE	10.	U
74-83-9	BROMOMETHANE	10.	U
75-01-4	VINYL CHLORIDE	10.	U
75-00-3	CHLOROETHANE	10.	U
75-09-2	METHYLENE CHLORIDE	5.	U
67-64-1	ACETONE	10.	U
75-15-0	CARBON DISULFIDE	5.	U
75-35-4	1,1-DICHLOROETHENE	5.	U
75-34-3	1,1-DICHLOROETHANE	5.	U
540-59-0	1,2-DICHLOROETHENE (TOTAL)	5.	U
67-66-3	CHLOROFORM	5.	U
107-06-2	1,2-DICHLOROETHANE	5.	U
78-93-3	2-BUTANONE	10.	U
71-55-6	1,1,1-TRICHLOROETHANE	5.	U
56-23-5	CARBON TETRACHLORIDE	5.	U
108-05-4	VINYL ACETATE	10.	U
75-27-4	BROMODICHLOROMETHANE	5.	U
78-87-5	1,2-DICHLOROPROPANE	5.	U
10061-01-5	CIS-1,3-DICHLOROPROPENE	5.	U
79-01-6	TRICHLOROETHENE	5.	U
124-48-1	DIBROMOCHLOROMETHANE	5.	U
79-00-5	1,1,2-TRICHLOROETHANE	5.	U
71-43-2	BENZENE	5.	U
10061-02-6	TRANS-1,3-DICHLOROPROPENE	5.	U
75-25-2	BROMOFORM	5.	U
108-10-1	4-METHYL-2-PENTANONE	10.	U
591-78-6	2-HEXANONE	10.	U
127-18-4	TETRACHLOROETHENE	5.	U
79-34-5	1,1,2,2-TETRACHLOROETHANE	5.	U
108-88-3	TOLUENE	5.	U
108-90-7	CHLOROBENZENE	5.	U
100-41-4	ETHYLBENZENE	5.	U
100-42-5	STYRENE	5.	U
1330-20-7	XYLENE (TOTAL)	5.	U

1E
VOLATILE ORGANICS ANALYSIS DATA SHEET
TENTATIVELY IDENTIFIED COMPOUNDS

EPA SAMPLE NO.

EHM04

Lab Name: PEI Contract: 68-D9-0037

Lab Code: PEI Case No.: 16377 SAS No.: SDG No.: EHM01

Matrix: (soil/water) WATER Lab Sample ID: X1-05-070-04B

Sample wt/vol: 5.000 (g/mL) ML Lab File ID: EHM04

Level: (low/med) LOW Date Received: 5/ 9/91

% Moisture: not dec. 100. Date Analyzed: 5/19/91

Column: (pack/cap) PACK Dilution Factor: 1.00

Number TICs found: 0

CONCENTRATION UNITS:
(ug/L or ug/Kg) UG/L

	CAS NUMBER	COMPOUND NAME	RT	EST. CONC.	Q
1.					
2.					
3.					
4.					
5.					
6.					
7.					
8.					
9.					
10.					
11.					
12.					
13.					
14.					
15.					
16.					
17.					
18.					
19.					
20.					
21.					
22.					
23.					
24.					
25.					
26.					
27.					
28.					
29.					
30.					

1A
VOLATILE ORGANICS ANALYSIS DATA SHEET

EPA SAMPLE NO. 09111

EHW89

Lab Name: PEI Contract: 68-D9-0037

Lab Code: PEI Case No.: 16377 SAS No.: SDG No.: EHM01

Matrix: (soil/water) SOIL Lab Sample ID: X1-05-070-06B

Sample wt/vol: 5.000 (g/mL) G Lab File ID: EHW89RE

Level: (low/med) LOW Date Received: 5/ 9/91

% Moisture: not dec. 45. Date Analyzed: 5/19/91

Column: (pack/cap) PACK Dilution Factor: 1.00

CAS NO.	COMPOUND	CONCENTRATION UNITS: (ug/L or ug/Kg) UG/KG	Q
74-87-3	CHLOROMETHANE	18.	U
74-83-9	BROMOMETHANE	18.	U
75-01-4	VINYL CHLORIDE	18.	U
75-00-3	CHLOROETHANE	18.	U
75-09-2	METHYLENE CHLORIDE	100.	
67-64-1	ACETONE	530.	E
75-15-0	CARBON DISULFIDE	9.	U
75-35-4	1,1-DICHLOROETHENE	9.	U
75-34-3	1,1-DICHLOROETHANE	9.	U
540-59-0	1,2-DICHLOROETHENE (TOTAL)	9.	U
67-66-3	CHLOROFORM	9.	U
107-06-2	1,2-DICHLOROETHANE	9.	U
78-93-3	2-BUTANONE	160.	~~U~~ J KM 7/3/91
71-55-6	1,1,1-TRICHLOROETHANE	9.	U
56-23-5	CARBON TETRACHLORIDE	9.	U
108-05-4	VINYL ACETATE	18.	U
75-27-4	BROMODICHLOROMETHANE	9.	U
78-87-5	1,2-DICHLOROPROPANE	9.	U
10061-01-5	CIS-1,3-DICHLOROPROPENE	9.	U
79-01-6	TRICHLOROETHENE	9.	U
124-48-1	DIBROMOCHLOROMETHANE	9.	U
79-00-5	1,1,2-TRICHLOROETHANE	9.	U
71-43-2	BENZENE	9.	U
10061-02-6	TRANS-1,3-DICHLOROPROPENE	9.	U
75-25-2	BROMOFORM	9.	U
108-10-1	4-METHYL-2-PENTANONE	9.	J
591-78-6	2-HEXANONE	18.	U
127-18-4	TETRACHLOROETHENE	9.	U
79-34-5	1,1,2,2-TETRACHLOROETHANE	9.	U
108-88-3	TOLUENE	7.	J
108-90-7	CHLOROBENZENE	9.	U
100-41-4	ETHYLBENZENE	9.	U
100-42-5	STYRENE	9.	U
1330-20-7	XYLENES (TOTAL)	9.	U

1E

VOLATILE ORGANICS ANALYSIS DATA SHEET
TENTATIVELY IDENTIFIED COMPOUNDS

EPA SAMPLE NO. 0112

EHW89

Lab Name: PEI Contract: 68-D9-0037

Lab Code: PEI Case No.: 16377 SAS No.: SDG No.: EHM01

Matrix: (soil/water) SOIL Lab Sample ID: X1-05-070-06B

Sample wt/vol: 5.000 (g/mL) G Lab File ID: EHW89RE

Level: (low/med) LOW Date Received: 5/ 9/91

% Moisture: not dec. 45. Date Analyzed: 5/19/91

Column: (pack/cap) PACK Dilution Factor: 1.00

Number TICs found: 0

CONCENTRATION UNITS:
(ug/L or ug/Kg) UG/KG

	CAS NUMBER	COMPOUND NAME	RT	EST. CONC.	Q
1.					
2.					
3.					
4.					
5.					
6.					
7.					
8.					
9.					
10.					
11.					
12.					
13.					
14.					
15.					
16.					
17.					
18.					
19.					
20.					
21.					
22.					
23.					
24.					
25.					
26.					
27.					
28.					
29.					
30.					

1A
VOLATILE ORGANICS ANALYSIS DATA SHEET

EPA SAMPLE NO. 0122

EHW88

Lab Name: PEI Contract: 68-D9-0037

Lab Code: PEI Case No.: 16377 SAS No.: SDG No.: EHM01

Matrix: (soil/water) SOIL Lab Sample ID: X1-05-070-05B

Sample wt/vol: 5.000 (g/mL) G Lab File ID: EHW88

Level: (low/med) LOW Date Received: 5/ 9/91

% Moisture: not dec. 57. Date Analyzed: 5/18/91

Column: (pack/cap) PACK Dilution Factor: 1.00

CAS NO.	COMPOUND	CONCENTRATION UNITS: (ug/L or ug/Kg) UG/KG	Q
74-87-3	CHLOROMETHANE	23.	U
74-83-9	BROMOMETHANE	23.	U
75-01-4	VINYL CHLORIDE	23.	U
75-00-3	CHLOROETHANE	23.	U
75-09-2	METHYLENE CHLORIDE	12.	U
67-64-1	ACETONE	350.	
75-15-0	CARBON DISULFIDE	6.	J
75-35-4	1,1-DICHLOROETHENE	12.	U
75-34-3	1,1-DICHLOROETHANE	12.	U
540-59-0	1,2-DICHLOROETHENE (TOTAL)	12.	U
67-66-3	CHLOROFORM	12.	U
107-06-2	1,2-DICHLOROETHANE	12.	U
78-93-3	2-BUTANONE	87.	~~B U~~ CM
71-55-6	1,1,1-TRICHLOROETHANE	15.	~~B U~~ 1/B/91
56-23-5	CARBON TETRACHLORIDE	12.	U
108-05-4	VINYL ACETATE	23.	U
75-27-4	BROMODICHLOROMETHANE	12.	U
78-87-5	1,2-DICHLOROPROPANE	12.	U
10061-01-5	CIS-1,3-DICHLOROPROPENE	12.	U
79-01-6	TRICHLOROETHENE	12.	U
124-48-1	DIBROMOCHLOROMETHANE	12.	U
79-00-5	1,1,2-TRICHLOROETHANE	12.	U
71-43-2	BENZENE	12.	U
10061-02-6	TRANS-1,3-DICHLOROPROPENE	12.	U
75-25-2	BROMOFORM	12.	U
108-10-1	4-METHYL-2-PENTANONE	23.	U
591-78-6	2-HEXANONE	23.	U
127-18-4	TETRACHLOROETHENE	12.	U
79-34-5	1,1,2,2-TETRACHLOROETHANE	12.	U
108-88-3	TOLUENE	4.	J
108-90-7	CHLOROBENZENE	100.	
100-41-4	ETHYLBENZENE	12.	U
100-42-5	STYRENE	12.	U
1330-20-7	XYLENES (TOTAL)	12.	U

1E

VOLATILE ORGANICS ANALYSIS DATA SHEET
TENTATIVELY IDENTIFIED COMPOUNDS

EPA SAMPLE NO.

EHW88

0123

Lab Name: PEI Contract: 68-D9-0037

Lab Code: PEI Case No.: 16377 SAS No.: SDG No.: EHM01

Matrix: (soil/water) SOIL Lab Sample ID: X1-05-070-05B

Sample wt/vol: 5.000 (g/mL) G Lab File ID: EHW88

Level: (low/med) LOW Date Received: 5/ 9/91

% Moisture: not dec. 57. Date Analyzed: 5/18/91

Column: (pack/cap) PACK Dilution Factor: 1.00

Number TICs found: 2

CONCENTRATION UNITS:
(ug/L or ug/Kg) UG/KG

	CAS NUMBER	COMPOUND NAME	RT	EST. CONC.	Q
1.	110-54-3	HEXANE (DOT)	17.40	9.	J
2.	- -	UNKNOWN DICHLOROBENZENE	32.26	10.	J
3.					
4.					
5.					
6.					
7.					
8.					
9.					
10.					
11.					
12.					
13.					
14.					
15.					
16.					
17.					
18.					
19.					
20.					
21.					
22.					
23.					
24.					
25.					
26.					
27.					
28.					
29.					
30.					

1A
VOLATILE ORGANICS ANALYSIS DATA SHEET

EPA SAMPLE NO.

EHW90

Lab Name: PEI Contract: 68-D9-0037

Lab Code: PEI Case No.: 16377 SAS No.: SDG No.: EHM01

Matrix: (soil/water) SOIL Lab Sample ID: X1-05-070-07B

Sample wt/vol: 5.000 (g/mL) G Lab File ID: EHW90

Level: (low/med) LOW Date Received: 5/ 9/91

% Moisture: not dec. 21. Date Analyzed: 5/18/91

Column: (pack/cap) PACK Dilution Factor: 1.00

CAS NO.	COMPOUND	CONCENTRATION UNITS: (ug/L or ug/Kg) UG/KG	Q
74-87-3	CHLOROMETHANE	13.	U
74-83-9	BROMOMETHANE	13.	U
75-01-4	VINYL CHLORIDE	13.	U
75-00-3	CHLOROETHANE	13.	U
75-09-2	METHYLENE CHLORIDE	11.	~~B~~ CM 7/3/91
67-64-1	ACETONE	13.	U
75-15-0	CARBON DISULFIDE	4.	J
75-35-4	1,1-DICHLOROETHENE	6.	U
75-34-3	1,1-DICHLOROETHANE	6.	U
540-59-0	1,2-DICHLOROETHENE (TOTAL)	6.	U
67-66-3	CHLOROFORM	6.	U
107-06-2	1,2-DICHLOROETHANE	6.	U
78-93-3	2-BUTANONE	13.	U
71-55-6	1,1,1-TRICHLOROETHANE	10.	~~B~~ U KM 7/3/91
56-23-5	CARBON TETRACHLORIDE	6.	U
108-05-4	VINYL ACETATE	13.	U
75-27-4	BROMODICHLOROMETHANE	6.	U
78-87-5	1,2-DICHLOROPROPANE	6.	U
10061-01-5	CIS-1,3-DICHLOROPROPENE	6.	U
79-01-6	TRICHLOROETHENE	6.	U
124-48-1	DIBROMOCHLOROMETHANE	6.	U
79-00-5	1,1,2-TRICHLOROETHANE	6.	U
71-43-2	BENZENE	6.	U
10061-02-6	TRANS-1,3-DICHLOROPROPENE	6.	U
75-25-2	BROMOFORM	6.	U
108-10-1	4-METHYL-2-PENTANONE	13.	U
591-78-6	2-HEXANONE	13.	U
127-18-4	TETRACHLOROETHENE	6.	U
79-34-5	1,1,2,2-TETRACHLOROETHANE	6.	U
108-88-3	TOLUENE	2.	J
108-90-7	CHLOROBENZENE	6.	U
100-41-4	ETHYLBENZENE	6.	U
100-42-5	STYRENE	6.	U
1330-20-7	XYLENES (TOTAL)	6.	U

1E
VOLATILE ORGANICS ANALYSIS DATA SHEET
TENTATIVELY IDENTIFIED COMPOUNDS

EPA SAMPLE NO.

EHW90

0137

Lab Name: PEI Contract: 68-D9-0037

Lab Code: PEI Case No.: 16377 SAS No.: SDG No.: EHM01

Matrix: (soil/water) SOIL Lab Sample ID: X1-05-070-07B

Sample wt/vol: 5.000 (g/mL) G Lab File ID: EHW90

Level: (low/med) LOW Date Received: 5/ 9/91

% Moisture: not dec. 21. Date Analyzed: 5/18/91

Column: (pack/cap) PACK Dilution Factor: 1.00

Number TICs found: 0

CONCENTRATION UNITS:
(ug/L or ug/Kg) UG/KG

	CAS NUMBER	COMPOUND NAME	RT	EST. CONC.	Q
1.					
2.					
3.					
4.					
5.					
6.					
7.					
8.					
9.					
10.					
11.					
12.					
13.					
14.					
15.					
16.					
17.					
18.					
19.					
20.					
21.					
22.					
23.					
24.					
25.					
26.					
27.					
28.					
29.					
30.					

1A
VOLATILE ORGANICS ANALYSIS DATA SHEET

EPA SAMPLE NO. 0145

EHW91

Lab Name: PEI Contract: 68-D9-0037

Lab Code: PEI Case No.: 16377 SAS No.: SDG No.: EHM01

Matrix: (soil/water) WATER Lab Sample ID: X1-05-070-15B

Sample wt/vol: 5.000 (g/mL) ML Lab File ID: EHW91RE

Level: (low/med) LOW Date Received: 5/10/91

% Moisture: not dec. 100. Date Analyzed: 5/19/91

Column: (pack/cap) PACK Dilution Factor: 1.00

CAS NO.	COMPOUND	CONCENTRATION UNITS: (ug/L or ug/Kg) UG/L	Q
74-87-3	CHLOROMETHANE	10.	U
74-83-9	BROMOMETHANE	10.	U
75-01-4	VINYL CHLORIDE	10.	U
75-00-3	CHLOROETHANE	10.	U
75-09-2	METHYLENE CHLORIDE	5.	U
67-64-1	ACETONE	10.	U
75-15-0	CARBON DISULFIDE	5.	U
75-35-4	1,1-DICHLOROETHENE	5.	U
75-34-3	1,1-DICHLOROETHANE	5.	U
540-59-0	1,2-DICHLOROETHENE (TOTAL)	5.	U
67-66-3	CHLOROFORM	5.	U
107-06-2	1,2-DICHLOROETHANE	5.	U
78-93-3	2-BUTANONE	10.	U
71-55-6	1,1,1-TRICHLOROETHANE	5.	U
56-23-5	CARBON TETRACHLORIDE	5.	U
108-05-4	VINYL ACETATE	10.	U
75-27-4	BROMODICHLOROMETHANE	5.	U
78-87-5	1,2-DICHLOROPROPANE	5.	U
10061-01-5	CIS-1,3-DICHLOROPROPENE	5.	U
79-01-6	TRICHLOROETHENE	5.	U
124-48-1	DIBROMOCHLOROMETHANE	5.	U
79-00-5	1,1,2-TRICHLOROETHANE	5.	U
71-43-2	BENZENE	5.	U
10061-02-6	TRANS-1,3-DICHLOROPROPENE	5.	U
75-25-2	BROMOFORM	5.	U
108-10-1	4-METHYL-2-PENTANONE	10.	U
591-78-6	2-HEXANONE	10.	U
127-18-4	TETRACHLOROETHENE	5.	U
79-34-5	1,1,2,2-TETRACHLOROETHANE	5.	U
108-88-3	TOLUENE	5.	U
108-90-7	CHLOROBENZENE	5.	U
100-41-4	ETHYLBENZENE	5.	U
100-42-5	STYRENE	5.	U
1330-20-7	XYLENE (TOTAL)	5.	U

1E

VOLATILE ORGANICS ANALYSIS DATA SHEET
TENTATIVELY IDENTIFIED COMPOUNDS

EPA SAMPLE NO. 0146

EHW91

Lab Name: PEI Contract: 68-D9-0037

Lab Code: PEI Case No.: 16377 SAS No.: SDG No.: EHM01

Matrix: (soil/water) WATER Lab Sample ID: X1-05-070-15B

Sample wt/vol: 5.000 (g/mL) ML Lab File ID: EHW91RE

Level: (low/med) LOW Date Received: 5/10/91

% Moisture: not dec. 100. Date Analyzed: 5/19/91

Column: (pack/cap) PACK Dilution Factor: 1.00

Number TICs found: 1

CONCENTRATION UNITS:
(ug/L or ug/Kg) UG/L

	CAS NUMBER	COMPOUND NAME	RT	EST. CONC.	Q
1.	- -	UNKNOWN	16.47	1000.	J
2.					
3.					
4.					
5.					
6.					
7.					
8.					
9.					
10.					
11.					
12.					
13.					
14.					
15.					
16.					
17.					
18.					
19.					
20.					
21.					
22.					
23.					
24.					
25.					
26.					
27.					
28.					
29.					
30.					

1A
VOLATILE ORGANICS ANALYSIS DATA SHEET

EPA SAMPLE NO. 0151

EHW92

Lab Name: PEI Contract: 68-D9-0037

Lab Code: PEI Case No.: 16377 SAS No.: SDG No.: EHM01

Matrix: (soil/water) WATER Lab Sample ID: X1-05-070-16B

Sample wt/vol: 5.000 (g/mL) ML Lab File ID: EHW92

Level: (low/med) LOW Date Received: 5/10/91

% Moisture: not dec. 100. Date Analyzed: 5/15/91

Column: (pack/cap) PACK Dilution Factor: 1.00

CAS NO.	COMPOUND	CONCENTRATION UNITS: (ug/L or ug/Kg) UG/L	Q
74-87-3	CHLOROMETHANE	10.	U
74-83-9	BROMOMETHANE	10.	U
75-01-4	VINYL CHLORIDE	10.	U
75-00-3	CHLOROETHANE	10.	U
75-09-2	METHYLENE CHLORIDE	5.	U
67-64-1	ACETONE	10.	U
75-15-0	CARBON DISULFIDE	5.	U
75-35-4	1,1-DICHLOROETHENE	5.	U
75-34-3	1,1-DICHLOROETHANE	5.	U
540-59-0	1,2-DICHLOROETHENE (TOTAL)	5.	U
67-66-3	CHLOROFORM	5.	U
107-06-2	1,2-DICHLOROETHANE	5.	U
78-93-3	2-BUTANONE	10.	U
71-55-6	1,1,1-TRICHLOROETHANE	5.	U
56-23-5	CARBON TETRACHLORIDE	5.	U
108-05-4	VINYL ACETATE	10.	U
75-27-4	BROMODICHLOROMETHANE	5.	U
78-87-5	1,2-DICHLOROPROPANE	5.	U
10061-01-5	CIS-1,3-DICHLOROPROPENE	5.	U
79-01-6	TRICHLOROETHENE	5.	U
124-48-1	DIBROMOCHLOROMETHANE	5.	U
79-00-5	1,1,2-TRICHLOROETHANE	5.	U
71-43-2	BENZENE	5.	U
10061-02-6	TRANS-1,3-DICHLOROPROPENE	5.	U
75-25-2	BROMOFORM	5.	U
108-10-1	4-METHYL-2-PENTANONE	10.	U
591-78-6	2-HEXANONE	10.	U
127-18-4	TETRACHLOROETHENE	5.	U
79-34-5	1,1,2,2-TETRACHLOROETHANE	5.	U
108-88-3	TOLUENE	5.	U
108-90-7	CHLOROBENZENE	5.	U
100-41-4	ETHYLBENZENE	5.	U
100-42-5	STYRENE	5.	U
1330-20-7	XYLENES (TOTAL)	5.	U

1E

VOLATILE ORGANICS ANALYSIS DATA SHEET
TENTATIVELY IDENTIFIED COMPOUNDS

EPA SAMPLE NO.

0152

EHW92

Lab Name: PEI Contract: 68-D9-0037

Lab Code: PEI Case No.: 16377 SAS No.: SDG No.: EHM01

Matrix: (soil/water) WATER Lab Sample ID: X1-05-070-16B

Sample wt/vol: 5.000 (g/mL) ML Lab File ID: EHW92

Level: (low/med) LOW Date Received: 5/10/91

% Moisture: not dec. 100. Date Analyzed: 5/15/91

Column: (pack/cap) PACK Dilution Factor: 1.00

Number TICs found: 0 CONCENTRATION UNITS: (ug/L or ug/Kg) UG/L

	CAS NUMBER	COMPOUND NAME	RT	EST. CONC.	Q
1.					
2.					
3.					
4.					
5.					
6.					
7.					
8.					
9.					
10.					
11.					
12.					
13.					
14.					
15.					
16.					
17.					
18.					
19.					
20.					
21.					
22.					
23.					
24.					
25.					
26.					
27.					
28.					
29.					
30.					

1A
VOLATILE ORGANICS ANALYSIS DATA SHEET

EPA SAMPLE NO.

EJW94

Lab Name: PEI Contract: 68-D9-0037

Lab Code: PEI Case No.: 16377 SAS No.: SDG No.: EHM01

Matrix: (soil/water) WATER Lab Sample ID: X1-05-070-17B

Sample wt/vol: 5.000 (g/mL) ML Lab File ID: EJW94

Level: (low/med) LOW Date Received: 5/10/91

% Moisture: not dec. 100. Date Analyzed: 5/15/91

Column: (pack/cap) PACK Dilution Factor: 1.00

CAS NO.	COMPOUND	CONCENTRATION UNITS: (ug/L or ug/Kg) UG/L	Q
74-87-3	CHLOROMETHANE	10.	U
74-83-9	BROMOMETHANE	10.	U
75-01-4	VINYL CHLORIDE	10.	U
75-00-3	CHLOROETHANE	10.	U
75-09-2	METHYLENE CHLORIDE	5.	U
67-64-1	ACETONE	10.	U
75-15-0	CARBON DISULFIDE	5.	U
75-35-4	1,1-DICHLOROETHENE	5.	U
75-34-3	1,1-DICHLOROETHANE	5.	U
540-59-0	1,2-DICHLOROETHENE (TOTAL)	5.	U
67-66-3	CHLOROFORM	5.	U
107-06-2	1,2-DICHLOROETHANE	5.	U
78-93-3	2-BUTANONE	10.	U
71-55-6	1,1,1-TRICHLOROETHANE	5.	U
56-23-5	CARBON TETRACHLORIDE	5.	U
108-05-4	VINYL ACETATE	10.	U
75-27-4	BROMODICHLOROMETHANE	5.	U
78-87-5	1,2-DICHLOROPROPANE	5.	U
10061-01-5	CIS-1,3-DICHLOROPROPENE	5.	U
79-01-6	TRICHLOROETHENE	5.	U
124-48-1	DIBROMOCHLOROMETHANE	5.	U
79-00-5	1,1,2-TRICHLOROETHANE	5.	U
71-43-2	BENZENE	5.	U
10061-02-6	TRANS-1,3-DICHLOROPROPENE	5.	U
75-25-2	BROMOFORM	5.	U
108-10-1	4-METHYL-2-PENTANONE	10.	U
591-78-6	2-HEXANONE	10.	U
127-18-4	TETRACHLOROETHENE	5.	U
79-34-5	1,1,2,2-TETRACHLOROETHANE	5.	U
108-88-3	TOLUENE	5.	U
108-90-7	CHLOROBENZENE	5.	U
100-41-4	ETHYLBENZENE	5.	U
100-42-5	STYRENE	5.	U
1330-20-7	XYLENES (TOTAL)	5.	U

1E
VOLATILE ORGANICS ANALYSIS DATA SHEET
TENTATIVELY IDENTIFIED COMPOUNDS

EPA SAMPLE NO.

EJW94

0157

Lab Name: PEI Contract: 68-D9-0037

Lab Code: PEI Case No.: 16377 SAS No.: SDG No.: EHM01

Matrix: (soil/water) WATER Lab Sample ID: X1-05-070-17B

Sample wt/vol: 5.000 (g/mL) ML Lab File ID: EJW94

Level: (low/med) LOW Date Received: 5/10/91

% Moisture: not dec. 100. Date Analyzed: 5/15/91

Column: (pack/cap) PACK Dilution Factor: 1.00

Number TICs found: 0

CONCENTRATION UNITS:
(ug/L or ug/Kg) UG/L

	CAS NUMBER	COMPOUND NAME	RT	EST. CONC.	Q
1.					
2.					
3.					
4.					
5.					
6.					
7.					
8.					
9.					
10.					
11.					
12.					
13.					
14.					
15.					
16.					
17.					
18.					
19.					
20.					
21.					
22.					
23.					
24.					
25.					
26.					
27.					
28.					
29.					
30.					

1A
VOLATILE ORGANICS ANALYSIS DATA SHEET

EPA SAMPLE NO.

EJW99

0161

Lab Name: PEI Contract: 68-D9-0037

Lab Code: PEI Case No.: 16377 SAS No.: SDG No.: EHM01

Matrix: (soil/water) WATER Lab Sample ID: X1-05-070-18B

Sample wt/vol: 5.000 (g/mL) ML Lab File ID: EJW99

Level: (low/med) LOW Date Received: 5/10/91

% Moisture: not dec. 100. Date Analyzed: 5/14/91

Column: (pack/cap) PACK Dilution Factor: 1.00

CAS NO.	COMPOUND	CONCENTRATION UNITS: (ug/L or ug/Kg) UG/L	Q
74-87-3	CHLOROMETHANE	10.	U
74-83-9	BROMOMETHANE	10.	U
75-01-4	VINYL CHLORIDE	10.	U
75-00-3	CHLOROETHANE	10.	U
75-09-2	METHYLENE CHLORIDE	5.	U
67-64-1	ACETONE	10.	U
75-15-0	CARBON DISULFIDE	5.	U
75-35-4	1,1-DICHLOROETHENE	5.	U
75-34-3	1,1-DICHLOROETHANE	5.	U
540-59-0	1,2-DICHLOROETHENE (TOTAL)	5.	U
67-66-3	CHLOROFORM	4.	J
107-06-2	1,2-DICHLOROETHANE	5.	U
78-93-3	2-BUTANONE	10.	U
71-55-6	1,1,1-TRICHLOROETHANE	5.	U
56-23-5	CARBON TETRACHLORIDE	5.	U
108-05-4	VINYL ACETATE	10.	U
75-27-4	BROMODICHLOROMETHANE	3.	J
78-87-5	1,2-DICHLOROPROPANE	5.	U
10061-01-5	CIS-1,3-DICHLOROPROPENE	5.	U
79-01-6	TRICHLOROETHENE	5.	U
124-48-1	DIBROMOCHLOROMETHANE	2.	J
79-00-5	1,1,2-TRICHLOROETHANE	5.	U
71-43-2	BENZENE	5.	U
10061-02-6	TRANS-1,3-DICHLOROPROPENE	5.	U
75-25-2	BROMOFORM	5.	U
108-10-1	4-METHYL-2-PENTANONE	10.	U
591-78-6	2-HEXANONE	10.	U
127-18-4	TETRACHLOROETHENE	5.	U
79-34-5	1,1,2,2-TETRACHLOROETHANE	5.	U
108-88-3	TOLUENE	5.	U
108-90-7	CHLOROBENZENE	5.	U
100-41-4	ETHYLBENZENE	5.	U
100-42-5	STYRENE	5.	U
1330-20-7	XYLENES (TOTAL)	5.	U

1E

VOLATILE ORGANICS ANALYSIS DATA SHEET
TENTATIVELY IDENTIFIED COMPOUNDS

EPA SAMPLE NO.

EJW99

0162

Lab Name: PEI Contract: 68-D9-0037

Lab Code: PEI Case No.: 16377 SAS No.: SDG No.: EHM01

Matrix: (soil/water) WATER Lab Sample ID: X1-05-070-18B

Sample wt/vol: 5.000 (g/mL) ML Lab File ID: EJW99

Level: (low/med) LOW Date Received: 5/10/91

% Moisture: not dec. 100. Date Analyzed: 5/14/91

Column: (pack/cap) PACK Dilution Factor: 1.00

Number TICs found: 0

CONCENTRATION UNITS:
(ug/L or ug/Kg) UG/L

	CAS NUMBER	COMPOUND NAME	RT	EST. CONC.	Q
1.					
2.					
3.					
4.					
5.					
6.					
7.					
8.					
9.					
10.					
11.					
12.					
13.					
14.					
15.					
16.					
17.					
18.					
19.					
20.					
21.					
22.					
23.					
24.					
25.					
26.					
27.					
28.					
29.					
30.					

1A
VOLATILE ORGANICS ANALYSIS DATA SHEET

EPA SAMPLE NO. 0169

EKX66

Lab Name: PEI Contract: 68-D9-0037

Lab Code: PEI Case No.: 16377 SAS No.: SDG No.: EHM01

Matrix: (soil/water) WATER Lab Sample ID: X1-06-070-14B

Sample wt/vol: 5.000 (g/mL) ML Lab File ID: EKX66

Level: (low/med) LOW Date Received: 5/10/91

% Moisture: not dec. 100. Date Analyzed: 5/19/91

Column: (pack/cap) PACK Dilution Factor: 1.00

CAS NO.	COMPOUND	CONCENTRATION UNITS: (ug/L or ug/Kg) UG/L	Q
74-87-3	CHLOROMETHANE	10.	U
74-83-9	BROMOMETHANE	10.	U
75-01-4	VINYL CHLORIDE	10.	U
75-00-3	CHLOROETHANE	10.	U
75-09-2	METHYLENE CHLORIDE	5.	U
67-64-1	ACETONE	10.	U
75-15-0	CARBON DISULFIDE	5.	U
75-35-4	1,1-DICHLOROETHENE	5.	U
75-34-3	1,1-DICHLOROETHANE	5.	U
540-59-0	1,2-DICHLOROETHENE (TOTAL)	5.	U
67-66-3	CHLOROFORM	5.	U
107-06-2	1,2-DICHLOROETHANE	5.	U
78-93-3	2-BUTANONE	10.	U
71-55-6	1,1,1-TRICHLOROETHANE	5.	U
56-23-5	CARBON TETRACHLORIDE	5.	U
108-05-4	VINYL ACETATE	10.	U
75-27-4	BROMODICHLOROMETHANE	5.	U
78-87-5	1,2-DICHLOROPROPANE	5.	U
10061-01-5	CIS-1,3-DICHLOROPROPENE	5.	U
79-01-6	TRICHLOROETHENE	5.	U
124-48-1	DIBROMOCHLOROMETHANE	5.	U
79-00-5	1,1,2-TRICHLOROETHANE	5.	U
71-43-2	BENZENE	5.	U
10061-02-6	TRANS-1,3-DICHLOROPROPENE	5.	U
75-25-2	BROMOFORM	5.	U
108-10-1	4-METHYL-2-PENTANONE	10.	U
591-78-6	2-HEXANONE	10.	U
127-18-4	TETRACHLOROETHENE	5.	U
79-34-5	1,1,2,2-TETRACHLOROETHANE	5.	U
108-88-3	TOLUENE	5.	U
108-90-7	CHLOROBENZENE	5.	U
100-41-4	ETHYLBENZENE	5.	U
100-42-5	STYRENE	5.	U
1330-20-7	XYLENE (TOTAL)	5.	U

1E
VOLATILE ORGANICS ANALYSIS DATA SHEET
TENTATIVELY IDENTIFIED COMPOUNDS

EPA SAMPLE NO.

EKX66

Lab Name: PEI Contract: 68-D9-0037

Lab Code: PEI Case No.: 16377 SAS No.: SDG No.: EHM01

Matrix: (soil/water) WATER Lab Sample ID: X1-06-070-14B

Sample wt/vol: 5.000 (g/mL) ML Lab File ID: EKX66

Level: (low/med) LOW Date Received: 5/10/91

% Moisture: not dec. 100. Date Analyzed: 5/19/91

Column: (pack/cap) PACK Dilution Factor: 1.00

Number TICs found: 1

CONCENTRATION UNITS:
(ug/L or ug/Kg) UG/L

	CAS NUMBER	COMPOUND NAME	RT	EST. CONC.	Q
1.	- -	UNKNOWN	1.90	200.	J
2.					
3.					
4.					
5.					
6.					
7.					
8.					
9.					
10.					
11.					
12.					
13.					
14.					
15.					
16.					
17.					
18.					
19.					
20.					
21.					
22.					
23.					
24.					
25.					
26.					
27.					
28.					
29.					
30.					

1A
VOLATILE ORGANICS ANALYSIS DATA SHEET

EPA SAMPLE NO. 0175

EMN98

Lab Name: PEI Contract: 68-D9-0037

Lab Code: PEI Case No.: 16377 SAS No.: SDG No.: EHM01

Matrix: (soil/water) WATER Lab Sample ID: X1-05-070-19B

Sample wt/vol: 5.000 (g/mL) ML Lab File ID: EMN98

Level: (low/med) LOW Date Received: 5/10/91

% Moisture: not dec. 100. Date Analyzed: 5/15/91

Column: (pack/cap) PACK Dilution Factor: 1.00

CAS NO.	COMPOUND	CONCENTRATION UNITS: (ug/L or ug/Kg) UG/L	Q
74-87-3	CHLOROMETHANE	10.	U
74-83-9	BROMOMETHANE	10.	U
75-01-4	VINYL CHLORIDE	10.	U
75-00-3	CHLOROETHANE	10.	U
75-09-2	METHYLENE CHLORIDE	5.	U
67-64-1	ACETONE	10.	U
75-15-0	CARBON DISULFIDE	5.	U
75-35-4	1,1-DICHLOROETHENE	5.	U
75-34-3	1,1-DICHLOROETHANE	5.	U
540-59-0	1,2-DICHLOROETHENE (TOTAL)	5.	U
67-66-3	CHLOROFORM	5.	U
107-06-2	1,2-DICHLOROETHANE	5.	U
78-93-3	2-BUTANONE	10.	U
71-55-6	1,1,1-TRICHLOROETHANE	5.	U
56-23-5	CARBON TETRACHLORIDE	5.	U
108-05-4	VINYL ACETATE	10.	U
75-27-4	BROMODICHLOROMETHANE	5.	U
78-87-5	1,2-DICHLOROPROPANE	5.	U
10061-01-5	CIS-1,3-DICHLOROPROPENE	5.	U
79-01-6	TRICHLOROETHENE	5.	U
124-48-1	DIBROMOCHLOROMETHANE	5.	U
79-00-5	1,1,2-TRICHLOROETHANE	5.	U
71-43-2	BENZENE	10.	
10061-02-6	TRANS-1,3-DICHLOROPROPENE	5.	U
75-25-2	BROMOFORM	5.	U
108-10-1	4-METHYL-2-PENTANONE	10.	U
591-78-6	2-HEXANONE	10.	U
127-18-4	TETRACHLOROETHENE	5.	U
79-34-5	1,1,2,2-TETRACHLOROETHANE	5.	U
108-88-3	TOLUENE	5.	U
108-90-7	CHLOROBENZENE	120.	
100-41-4	ETHYLBENZENE	5.	U
100-42-5	STYRENE	5.	U
1330-20-7	XYLENES (TOTAL)	5.	U

1E

VOLATILE ORGANICS ANALYSIS DATA SHEET
TENTATIVELY IDENTIFIED COMPOUNDS

EPA SAMPLE NO. 0176

EMN98

Lab Name: PEI Contract: 68-D9-0037

Lab Code: PEI Case No.: 16377 SAS No.: SDG No.: EHM01

Matrix: (soil/water) WATER Lab Sample ID: X1-05-070-19B

Sample wt/vol: 5.000 (g/mL) ML Lab File ID: EMN98

Level: (low/med) LOW Date Received: 5/10/91

% Moisture: not dec. 100. Date Analyzed: 5/15/91

Column: (pack/cap) PACK Dilution Factor: 1.00

Number TICs found: 1 CONCENTRATION UNITS: (ug/L or ug/Kg) UG/L

	CAS NUMBER	COMPOUND NAME	RT	EST. CONC.	Q
1.	- -	UNKNOWN	9.40	7.	J
2.					
3.					
4.					
5.					
6.					
7.					
8.					
9.					
10.					
11.					
12.					
13.					
14.					
15.					
16.					
17.					
18.					
19.					
20.					
21.					
22.					
23.					
24.					
25.					
26.					
27.					
28.					
29.					
30.					

1A
VOLATILE ORGANICS ANALYSIS DATA SHEET

EPA SAMPLE NO.

ES387

0183

Lab Name: PEI Contract: 68-D9-0037

Lab Code: PEI Case No.: 16377 SAS No.: SDG No.: EHM01

Matrix: (soil/water) SOIL Lab Sample ID: X1-05-070-09B

Sample wt/vol: 5.000 (g/mL) G Lab File ID: ES387

Level: (low/med) LOW Date Received: 5/ 9/91

% Moisture: not dec. 32. Date Analyzed: 5/18/91

Column: (pack/cap) PACK Dilution Factor: 1.00

CAS NO.	COMPOUND	CONCENTRATION UNITS: (ug/L or ug/Kg) UG/KG	Q
74-87-3	CHLOROMETHANE	15.	U
74-83-9	BROMOMETHANE	15.	U
75-01-4	VINYL CHLORIDE	15.	U
75-00-3	CHLOROETHANE	15.	U
75-09-2	METHYLENE CHLORIDE	7.	U
67-64-1	ACETONE	120.	
75-15-0	CARBON DISULFIDE	5.	J
75-35-4	1,1-DICHLOROETHENE	7.	U
75-34-3	1,1-DICHLOROETHANE	7.	U
540-59-0	1,2-DICHLOROETHENE (TOTAL)	7.	U
67-66-3	CHLOROFORM	7.	U
107-06-2	1,2-DICHLOROETHANE	7.	U
78-93-3	2-BUTANONE	30.	~~B J~~ KM
71-55-6	1,1,1-TRICHLOROETHANE	10.	~~B~~ U 3/7/91
56-23-5	CARBON TETRACHLORIDE	7.	U
108-05-4	VINYL ACETATE	15.	U
75-27-4	BROMODICHLOROMETHANE	7.	U
78-87-5	1,2-DICHLOROPROPANE	7.	U
10061-01-5	CIS-1,3-DICHLOROPROPENE	7.	U
79-01-6	TRICHLOROETHENE	7.	U
124-48-1	DIBROMOCHLOROMETHANE	7.	U
79-00-5	1,1,2-TRICHLOROETHANE	7.	U
71-43-2	BENZENE	7.	U
10061-02-6	TRANS-1,3-DICHLOROPROPENE	7.	U
75-25-2	BROMOFORM	7.	U
108-10-1	4-METHYL-2-PENTANONE	15.	U
591-78-6	2-HEXANONE	15.	U
127-18-4	TETRACHLOROETHENE	7.	U
79-34-5	1,1,2,2-TETRACHLOROETHANE	7.	U
108-88-3	TOLUENE	2.	J
108-90-7	CHLOROBENZENE	7.	U
100-41-4	ETHYLBENZENE	7.	U
100-42-5	STYRENE	7.	U
1330-20-7	XYLENES (TOTAL)	7.	U

1E

VOLATILE ORGANICS ANALYSIS DATA SHEET
TENTATIVELY IDENTIFIED COMPOUNDS

EPA SAMPLE NO.

ES387

0184

Lab Name: PEI Contract: 68-D9-0037

Lab Code: PEI Case No.: 16377 SAS No.: SDG No.: EHM01

Matrix: (soil/water) SOIL Lab Sample ID: X1-05-070-09B

Sample wt/vol: 5.000 (g/mL) G Lab File ID: ES387

Level: (low/med) LOW Date Received: 5/ 9/91

% Moisture: not dec. 32. Date Analyzed: 5/18/91

Column: (pack/cap) PACK Dilution Factor: 1.00

Number TICs found: 2

CONCENTRATION UNITS:
(ug/L or ug/Kg) UG/KG

	CAS NUMBER	COMPOUND NAME	RT	EST. CONC.	Q
1.	624-92-0	DISULFIDE, DIMETHYL	14.39	9.	J
2.	110-54-3	HEXANE (DOT)	17.45	4.	J
3.					
4.					
5.					
6.					
7.					
8.					
9.					
10.					
11.					
12.					
13.					
14.					
15.					
16.					
17.					
18.					
19.					
20.					
21.					
22.					
23.					
24.					
25.					
26.					
27.					
28.					
29.					
30.					

1A
VOLATILE ORGANICS ANALYSIS DATA SHEET

EPA SAMPLE NO. 0196

ES388

Lab Name: PEI Contract: 68-D9-0037

Lab Code: PEI Case No.: 16377 SAS No.: SDG No.: EHM01

Matrix: (soil/water) SOIL Lab Sample ID: X1-05-070-10B

Sample wt/vol: 5.000 (g/mL) G Lab File ID: ES388

Level: (low/med) LOW Date Received: 5/ 9/91

% Moisture: not dec. 39. Date Analyzed: 5/18/91

Column: (pack/cap) PACK Dilution Factor: 1.00

CAS NO.	COMPOUND	CONCENTRATION UNITS: (ug/L or ug/Kg) UG/KG	Q
74-87-3	CHLOROMETHANE	16.	U
74-83-9	BROMOMETHANE	16.	U
75-01-4	VINYL CHLORIDE	16.	U
75-00-3	CHLOROETHANE	16.	U
75-09-2	METHYLENE CHLORIDE	8.	U
67-64-1	ACETONE	100.	
75-15-0	CARBON DISULFIDE	5.	J
75-35-4	1,1-DICHLOROETHENE	8.	U
75-34-3	1,1-DICHLOROETHANE	8.	U
540-59-0	1,2-DICHLOROETHENE (TOTAL)	8.	U
67-66-3	CHLOROFORM	8.	U
107-06-2	1,2-DICHLOROETHANE	8.	U
78-93-3	2-BUTANONE	41.	~~B~~ ~~J~~
71-55-6	1,1,1-TRICHLOROETHANE	12.	~~B~~ ~~J~~
56-23-5	CARBON TETRACHLORIDE	8.	U
108-05-4	VINYL ACETATE	16.	U
75-27-4	BROMODICHLOROMETHANE	8.	U
78-87-5	1,2-DICHLOROPROPANE	8.	U
10061-01-5	CIS-1,3-DICHLOROPROPENE	8.	U
79-01-6	TRICHLOROETHENE	8.	U
124-48-1	DIBROMOCHLOROMETHANE	8.	U
79-00-5	1,1,2-TRICHLOROETHANE	8.	U
71-43-2	BENZENE	8.	U
10061-02-6	TRANS-1,3-DICHLOROPROPENE	8.	U
75-25-2	BROMOFORM	8.	U
108-10-1	4-METHYL-2-PENTANONE	6.	J
591-78-6	2-HEXANONE	16.	U
127-18-4	TETRACHLOROETHENE	8.	U
79-34-5	1,1,2,2-TETRACHLOROETHANE	8.	U
108-88-3	TOLUENE	3.	J
108-90-7	CHLOROBENZENE	8.	U
100-41-4	ETHYLBENZENE	8.	U
100-42-5	STYRENE	8.	U
1330-20-7	XYLENES (TOTAL)	8.	U

MM 5/3/91

1E

VOLATILE ORGANICS ANALYSIS DATA SHEET
TENTATIVELY IDENTIFIED COMPOUNDS

EPA SAMPLE NO.

ES388

0197

Lab Name: PEI Contract: 68-D9-0037

Lab Code: PEI Case No.: 16377 SAS No.: SDG No.: EHM01

Matrix: (soil/water) SOIL Lab Sample ID: X1-05-070-10B

Sample wt/vol: 5.000 (g/mL) G Lab File ID: ES388

Level: (low/med) LOW Date Received: 5/ 9/91

% Moisture: not dec. 39. Date Analyzed: 5/18/91

Column: (pack/cap) PACK Dilution Factor: 1.00

Number TICs found: 1

CONCENTRATION UNITS:
(ug/L or ug/Kg) UG/KG

	CAS NUMBER	COMPOUND NAME	RT	EST. CONC.	Q
1.	- -	UNKNOWN	17.45	5.	J
2.					
3.					
4.					
5.					
6.					
7.					
8.					
9.					
10.					
11.					
12.					
13.					
14.					
15.					
16.					
17.					
18.					
19.					
20.					
21.					
22.					
23.					
24.					
25.					
26.					
27.					
28.					
29.					
30.					

1A
VOLATILE ORGANICS ANALYSIS DATA SHEET

EPA SAMPLE NO.

ES388 RE

Lab Name: PEI Contract: 68-D9-0037

Lab Code: PEI Case No.: 16377 SAS No.: SDG No.: EHM01

Matrix: (soil/water) SOIL Lab Sample ID: X1-05-070-10B

Sample wt/vol: 5.000 (g/mL) G Lab File ID: ES388RE

Level: (low/med) LOW Date Received: 5/ 9/91

% Moisture: not dec. 39. Date Analyzed: 5/19/91

Column: (pack/cap) PACK Dilution Factor: 1.00

CAS NO.	COMPOUND	CONCENTRATION UNITS: (ug/L or ug/Kg) UG/KG	Q
74-87-3	CHLOROMETHANE	16.	U
74-83-9	BROMOMETHANE	16.	U
75-01-4	VINYL CHLORIDE	16.	U
75-00-3	CHLOROETHANE	16.	U
75-09-2	METHYLENE CHLORIDE	150.	
67-64-1	ACETONE	52.	
75-15-0	CARBON DISULFIDE	8.	U
75-35-4	1,1-DICHLOROETHENE	8.	U
75-34-3	1,1-DICHLOROETHANE	8.	U
540-59-0	1,2-DICHLOROETHENE (TOTAL)	8.	U
67-66-3	CHLOROFORM	8.	U
107-06-2	1,2-DICHLOROETHANE	8.	U
78-93-3	2-BUTANONE	23.	~~B~~U KM 7/3/91
71-55-6	1,1,1-TRICHLOROETHANE	8.	U
56-23-5	CARBON TETRACHLORIDE	8.	U
108-05-4	VINYL ACETATE	16.	U
75-27-4	BROMODICHLOROMETHANE	8.	U
78-87-5	1,2-DICHLOROPROPANE	8.	U
10061-01-5	CIS-1,3-DICHLOROPROPENE	8.	U
79-01-6	TRICHLOROETHENE	8.	U
124-48-1	DIBROMOCHLOROMETHANE	8.	U
79-00-5	1,1,2-TRICHLOROETHANE	8.	U
71-43-2	BENZENE	8.	U
10061-02-6	TRANS-1,3-DICHLOROPROPENE	8.	U
75-25-2	BROMOFORM	8.	U
108-10-1	4-METHYL-2-PENTANONE	16.	U
591-78-6	2-HEXANONE	16.	U
127-18-4	TETRACHLOROETHENE	8.	U
79-34-5	1,1,2,2-TETRACHLOROETHANE	8.	U
108-88-3	TOLUENE	8.	U
108-90-7	CHLOROBENZENE	8.	U
100-41-4	ETHYLBENZENE	8.	U
100-42-5	STYRENE	8.	U
1330-20-7	XYLENES (TOTAL)	8.	U

1E
VOLATILE ORGANICS ANALYSIS DATA SHEET
TENTATIVELY IDENTIFIED COMPOUNDS

EPA SAMPLE NO.

ES388 RE

Lab Name: PEI Contract: 68-D9-0037

Lab Code: PEI Case No.: 16377 SAS No.: SDG No.: EHM01

Matrix: (soil/water) SOIL Lab Sample ID: X1-05-070-10B

Sample wt/vol: 5.000 (g/mL) G Lab File ID: ES388RE

Level: (low/med) LOW Date Received: 5/ 9/91

% Moisture: not dec. 39. Date Analyzed: 5/19/91

Column: (pack/cap) PACK Dilution Factor: 1.00

Number TICs found: 0

CONCENTRATION UNITS:
(ug/L or ug/Kg) UG/KG

	CAS NUMBER	COMPOUND NAME	RT	EST. CONC.	Q
1.					
2.					
3.					
4.					
5.					
6.					
7.					
8.					
9.					
10.					
11.					
12.					
13.					
14.					
15.					
16.					
17.					
18.					
19.					
20.					
21.					
22.					
23.					
24.					
25.					
26.					
27.					
28.					
29.					
30.					

1A
VOLATILE ORGANICS ANALYSIS DATA SHEET

EPA SAMPLE NO. 0217

ES389

Lab Name: PEI Contract: 68-D9-0037

Lab Code: PEI Case No.: 16377 SAS No.: SDG No.: EHM01

Matrix: (soil/water) SOIL Lab Sample ID: X1-05-070-11B

Sample wt/vol: 5.000 (g/mL) G Lab File ID: ES389

Level: (low/med) LOW Date Received: 5/ 9/91

% Moisture: not dec. 19. Date Analyzed: 5/18/91

Column: (pack/cap) PACK Dilution Factor: 1.00

CAS NO.	COMPOUND	CONCENTRATION UNITS: (ug/L or ug/Kg) UG/KG	Q	
74-87-3	CHLOROMETHANE	12.	U	
74-83-9	BROMOMETHANE	12.	U	
75-01-4	VINYL CHLORIDE	12.	U	
75-00-3	CHLOROETHANE	12.	U	
75-09-2	METHYLENE CHLORIDE	6.	~~B~~ U	KM 7/3/91
67-64-1	ACETONE	30.		
75-15-0	CARBON DISULFIDE	3.	J	
75-35-4	1,1-DICHLOROETHENE	6.	U	
75-34-3	1,1-DICHLOROETHANE	6.	U	
540-59-0	1,2-DICHLOROETHENE (TOTAL)	6.	U	
67-66-3	CHLOROFORM	6.	U	
107-06-2	1,2-DICHLOROETHANE	6.	U	
78-93-3	2-BUTANONE	12.	U	
71-55-6	1,1,1-TRICHLOROETHANE	13.	~~B~~ U	KM 7/3/91
56-23-5	CARBON TETRACHLORIDE	6.	U	
108-05-4	VINYL ACETATE	12.	U	
75-27-4	BROMODICHLOROMETHANE	6.	U	
78-87-5	1,2-DICHLOROPROPANE	6.	U	
10061-01-5	CIS-1,3-DICHLOROPROPENE	6.	U	
79-01-6	TRICHLOROETHENE	6.	U	
124-48-1	DIBROMOCHLOROMETHANE	6.	U	
79-00-5	1,1,2-TRICHLOROETHANE	6.	U	
71-43-2	BENZENE	6.	U	
10061-02-6	TRANS-1,3-DICHLOROPROPENE	6.	U	
75-25-2	BROMOFORM	6.	U	
108-10-1	4-METHYL-2-PENTANONE	12.	U	
591-78-6	2-HEXANONE	12.	U	
127-18-4	TETRACHLOROETHENE	6.	U	
79-34-5	1,1,2,2-TETRACHLOROETHANE	6.	U	
108-88-3	TOLUENE	6.	U	
108-90-7	CHLOROBENZENE	6.	U	
100-41-4	ETHYLBENZENE	6.	U	
100-42-5	STYRENE	6.	U	
1330-20-7	XYLENES (TOTAL)	6.	U	

1E

VOLATILE ORGANICS ANALYSIS DATA SHEET
TENTATIVELY IDENTIFIED COMPOUNDS

EPA SAMPLE NO.

ES389

0218

Lab Name: PEI Contract: 68-D9-0037

Lab Code: PEI Case No.: 16377 SAS No.: SDG No.: EHM01

Matrix: (soil/water) SOIL Lab Sample ID: X1-05-070-11B

Sample wt/vol: 5.000 (g/mL) G Lab File ID: ES389

Level: (low/med) LOW Date Received: 5/ 9/91

% Moisture: not dec. 19. Date Analyzed: 5/18/91

Column: (pack/cap) PACK Dilution Factor: 1.00

Number TICs found: 9

CONCENTRATION UNITS:
(ug/L or ug/Kg) UG/KG

	CAS NUMBER	COMPOUND NAME	RT	EST. CONC.	Q
1.	110-54-3	HEXANE (DOT)	17.49	5.	J
2.	- -	UNKNOWN	24.49	7.	J
3.	- -	UNKNOWN HYDROCARBON	25.00	10.	J
4.	- -	UNKNOWN	25.47	10.	J
5.	- -	UNKNOWN HYDROCARBON	27.93	7.	J
6.	- -	UNKNOWN HYDROCARBON	28.61	20.	J
7.	- -	UNKNOWN HYDROCARBON	29.93	50.	J
8.	- -	UNKNOWN DICHLOROBENZENE	32.39	20.	J
9.	- -	UNKNOWN	31.44	10.	J
10.					
11.					
12.					
13.					
14.					
15.					
16.					
17.					
18.					
19.					
20.					
21.					
22.					
23.					
24.					
25.					
26.					
27.					
28.					
29.					
30.					

1A
VOLATILE ORGANICS ANALYSIS DATA SHEET

EPA SAMPLE NO. 0237

EHW89 DL

Lab Name: PEI Contract: 68-D9-0037

Lab Code: PEI Case No.: 16377 SAS No.: SDG No.: EHM01

Matrix: (soil/water) SOIL Lab Sample ID: X1-05-070-06B

Sample wt/vol: 1.000 (g/mL) G Lab File ID: EHW89DL

Level: (low/med) LOW Date Received: 5/ 9/91

% Moisture: not dec. 45. Date Analyzed: 5/19/91

Column: (pack/cap) PACK Dilution Factor: 1.00

CAS NO.	COMPOUND	CONCENTRATION UNITS: (ug/L or ug/Kg) UG/KG	Q
74-87-3	CHLOROMETHANE	90.	U
74-83-9	BROMOMETHANE	90.	U
75-01-4	VINYL CHLORIDE	90.	U
75-00-3	CHLOROETHANE	90.	U
75-09-2	METHYLENE CHLORIDE	680.	D
67-64-1	ACETONE	1100.	D
75-15-0	CARBON DISULFIDE	45.	U
75-35-4	1,1-DICHLOROETHENE	45.	U
75-34-3	1,1-DICHLOROETHANE	45.	U
540-59-0	1,2-DICHLOROETHENE (TOTAL)	45.	U
67-66-3	CHLOROFORM	45.	U
107-06-2	1,2-DICHLOROETHANE	45.	U
78-93-3	2-BUTANONE	430.	B D
71-55-6	1,1,1-TRICHLOROETHANE	45.	U
56-23-5	CARBON TETRACHLORIDE	45.	U
108-05-4	VINYL ACETATE	90.	U
75-27-4	BROMODICHLOROMETHANE	45.	U
78-87-5	1,2-DICHLOROPROPANE	45.	U
10061-01-5	CIS-1,3-DICHLOROPROPENE	45.	U
79-01-6	TRICHLOROETHENE	45.	U
124-48-1	DIBROMOCHLOROMETHANE	45.	U
79-00-5	1,1,2-TRICHLOROETHANE	45.	U
71-43-2	BENZENE	45.	U
10061-02-6	TRANS-1,3-DICHLOROPROPENE	45.	U
75-25-2	BROMOFORM	45.	U
108-10-1	4-METHYL-2-PENTANONE	90.	U
591-78-6	2-HEXANONE	90.	U
127-18-4	TETRACHLOROETHENE	45.	U
79-34-5	1,1,2,2-TETRACHLOROETHANE	45.	U
108-88-3	TOLUENE	45.	U
108-90-7	CHLOROBENZENE	45.	U
100-41-4	ETHYLBENZENE	45.	U
100-42-5	STYRENE	45.	U
1330-20-7	XYLENES (TOTAL)	45.	U

1E

VOLATILE ORGANICS ANALYSIS DATA SHEET
TENTATIVELY IDENTIFIED COMPOUNDS

EPA SAMPLE NO.

EHW89 DL

0238

Lab Name: PEI Contract: 68-D9-0037

Lab Code: PEI Case No.: 16377 SAS No.: SDG No.: EHM01

Matrix: (soil/water) SOIL Lab Sample ID: X1-05-070-06B

Sample wt/vol: 1.000 (g/mL) G Lab File ID: EHW89DL

Level: (low/med) LOW Date Received: 5/ 9/91

% Moisture: not dec. 45. Date Analyzed: 5/19/91

Column: (pack/cap) PACK Dilution Factor: 1.00

Number TICs found: 0

CONCENTRATION UNITS:
(ug/L or ug/Kg) UG/KG

CAS NUMBER	COMPOUND NAME	RT	EST. CONC.	Q
1.				
2.				
3.				
4.				
5.				
6.				
7.				
8.				
9.				
10.				
11.				
12.				
13.				
14.				
15.				
16.				
17.				
18.				
19.				
20.				
21.				
22.				
23.				
24.				
25.				
26.				
27.				
28.				
29.				
30.				

1A
VOLATILE ORGANICS ANALYSIS DATA SHEET

EPA SAMPLE NO.

ES390

0246

Lab Name: PEI Contract: 68-D9-0037

Lab Code: PEI Case No.: 16377 SAS No.: SDG No.: EHM01

Matrix: (soil/water) SOIL Lab Sample ID: X1-05-070-12B

Sample wt/vol: 5.000 (g/mL) G Lab File ID: ES390

Level: (low/med) LOW Date Received: 5/ 9/91

% Moisture: not dec. 34. Date Analyzed: 5/18/91

Column: (pack/cap) PACK Dilution Factor: 1.00

CAS NO.	COMPOUND	CONCENTRATION UNITS: (ug/L or ug/Kg) UG/KG	Q	
74-87-3	CHLOROMETHANE	15.	U	
74-83-9	BROMOMETHANE	15.	U	
75-01-4	VINYL CHLORIDE	15.	U	
75-00-3	CHLOROETHANE	15.	U	
75-09-2	METHYLENE CHLORIDE	14.	~~B~~ J	KM 7/9/91
67-64-1	ACETONE	15.	U	
75-15-0	CARBON DISULFIDE	8.	U	
75-35-4	1,1-DICHLOROETHENE	8.	U	
75-34-3	1,1-DICHLOROETHANE	8.	U	
540-59-0	1,2-DICHLOROETHENE (TOTAL)	8.	U	
67-66-3	CHLOROFORM	8.	U	
107-06-2	1,2-DICHLOROETHANE	8.	U	
78-93-3	2-BUTANONE	15.	U	
71-55-6	1,1,1-TRICHLOROETHANE	11.	~~B~~ U	KM 7/3/91
56-23-5	CARBON TETRACHLORIDE	8.	U	
108-05-4	VINYL ACETATE	15.	U	
75-27-4	BROMODICHLOROMETHANE	8.	U	
78-87-5	1,2-DICHLOROPROPANE	8.	U	
10061-01-5	CIS-1,3-DICHLOROPROPENE	8.	U	
79-01-6	TRICHLOROETHENE	8.	U	
124-48-1	DIBROMOCHLOROMETHANE	8.	U	
79-00-5	1,1,2-TRICHLOROETHANE	8.	U	
71-43-2	BENZENE	8.	U	
10061-02-6	TRANS-1,3-DICHLOROPROPENE	8.	U	
75-25-2	BROMOFORM	8.	U	
108-10-1	4-METHYL-2-PENTANONE	15.	U	
591-78-6	2-HEXANONE	15.	U	
127-18-4	TETRACHLOROETHENE	8.	U	
79-34-5	1,1,2,2-TETRACHLOROETHANE	8.	U	
108-88-3	TOLUENE	8.	U	
108-90-7	CHLOROBENZENE	8.	U	
100-41-4	ETHYLBENZENE	8.	U	
100-42-5	STYRENE	8.	U	
1330-20-7	XYLENES (TOTAL)	8.	U	

1E

VOLATILE ORGANICS ANALYSIS DATA SHEET
TENTATIVELY IDENTIFIED COMPOUNDS

EPA SAMPLE NO.

ES390

0247

Lab Name: PEI Contract: 68-D9-0037

Lab Code: PEI Case No.: 16377 SAS No.: SDG No.: EHM01

Matrix: (soil/water) SOIL Lab Sample ID: X1-05-070-12B

Sample wt/vol: 5.000 (g/mL) G Lab File ID: ES390

Level: (low/med) LOW Date Received: 5/ 9/91

% Moisture: not dec. 34. Date Analyzed: 5/18/91

Column: (pack/cap) PACK Dilution Factor: 1.00

Number TICs found: 6

CONCENTRATION UNITS:
(ug/L or ug/Kg) UG/KG

	CAS NUMBER	COMPOUND NAME	RT	EST. CONC.	Q
1.	110-54-3	HEXANE (DOT)	17.45	5.	J
2.	- -	UNKNOWN	24.49	9.	J
3.	- -	UNKNOWN HYDROCARBON	25.00	40.	J
4.	- -	UNKNOWN HYDROCARBON	25.85	10.	J
5.	- -	UNKNOWN HYDROCARBON	29.80	10.	J
6.	- -	UNKNOWN DICHLOROBENZENE	32.35	20.	J
7.					
8.					
9.					
10.					
11.					
12.					
13.					
14.					
15.					
16.					
17.					
18.					
19.					
20.					
21.					
22.					
23.					
24.					
25.					
26.					
27.					
28.					
29.					
30.					

1A
VOLATILE ORGANICS ANALYSIS DATA SHEET

EPA SAMPLE NO.

ES391

0259

Lab Name: PEI Contract: 68-D9-0037

Lab Code: PEI Case No.: 16377 SAS No.: SDG No.: EHM01

Matrix: (soil/water) SOIL Lab Sample ID: X1-05-070-13B

Sample wt/vol: 5.000 (g/mL) G Lab File ID: ES391

Level: (low/med) LOW Date Received: 5/ 9/91

% Moisture: not dec. 49. Date Analyzed: 5/18/91

Column: (pack/cap) PACK Dilution Factor: 1.00

CAS NO.	COMPOUND	CONCENTRATION UNITS: (ug/L or ug/Kg) UG/KG	Q
74-87-3	CHLOROMETHANE	19.	U
74-83-9	BROMOMETHANE	19.	U
75-01-4	VINYL CHLORIDE	19.	U
75-00-3	CHLOROETHANE	19.	U
75-09-2	METHYLENE CHLORIDE	10.	U
67-64-1	ACETONE	230.	
75-15-0	CARBON DISULFIDE	10.	U
75-35-4	1,1-DICHLOROETHENE	10.	U
75-34-3	1,1-DICHLOROETHANE	10.	U
540-59-0	1,2-DICHLOROETHENE (TOTAL)	10.	U
67-66-3	CHLOROFORM	10.	U
107-06-2	1,2-DICHLOROETHANE	10.	U
78-93-3	2-BUTANONE	65.	~~B~~ J
71-55-6	1,1,1-TRICHLOROETHANE	13.	~~B~~ U
56-23-5	CARBON TETRACHLORIDE	10.	U
108-05-4	VINYL ACETATE	19.	U
75-27-4	BROMODICHLOROMETHANE	10.	U
78-87-5	1,2-DICHLOROPROPANE	10.	U
10061-01-5	CIS-1,3-DICHLOROPROPENE	10.	U
79-01-6	TRICHLOROETHENE	10.	U
124-48-1	DIBROMOCHLOROMETHANE	10.	U
79-00-5	1,1,2-TRICHLOROETHANE	10.	U
71-43-2	BENZENE	7.	J
10061-02-6	TRANS-1,3-DICHLOROPROPENE	10.	U
75-25-2	BROMOFORM	10.	U
108-10-1	4-METHYL-2-PENTANONE	19.	U
591-78-6	2-HEXANONE	19.	U
127-18-4	TETRACHLOROETHENE	10.	U
79-34-5	1,1,2,2-TETRACHLOROETHANE	10.	U
108-88-3	TOLUENE	4.	J
108-90-7	CHLOROBENZENE	2500.	E
100-41-4	ETHYLBENZENE	10.	U
100-42-5	STYRENE	10.	U
1330-20-7	XYLENES (TOTAL)	10.	U

KM KM 7/3/91

1E

VOLATILE ORGANICS ANALYSIS DATA SHEET
TENTATIVELY IDENTIFIED COMPOUNDS

EPA SAMPLE NO.

ES391

0260

Lab Name: PEI Contract: 68-D9-0037

Lab Code: PEI Case No.: 16377 SAS No.: SDG No.: EHM01

Matrix: (soil/water) SOIL Lab Sample ID: X1-05-070-13B

Sample wt/vol: 5.000 (g/mL) G Lab File ID: ES391

Level: (low/med) LOW Date Received: 5/ 9/91

% Moisture: not dec. 49. Date Analyzed: 5/18/91

Column: (pack/cap) PACK Dilution Factor: 1.00

Number TICs found: 0

CONCENTRATION UNITS:
(ug/L or ug/Kg) UG/KG

	CAS NUMBER	COMPOUND NAME	RT	EST. CONC.	Q
1.					
2.					
3.					
4.					
5.					
6.					
7.					
8.					
9.					
10.					
11.					
12.					
13.					
14.					
15.					
16.					
17.					
18.					
19.					
20.					
21.					
22.					
23.					
24.					
25.					
26.					
27.					
28.					
29.					
30.					

1A
VOLATILE ORGANICS ANALYSIS DATA SHEET

EPA SAMPLE NO.

ES391 DL

0271

Lab Name: PEI Contract: 68-D9-0037

Lab Code: PEI Case No.: 16377 SAS No.: SDG No.: EHM01

Matrix: (soil/water) SOIL Lab Sample ID: X1-05-070-13B

Sample wt/vol: 4.000 (g/mL) G Lab File ID: ES391DL

Level: (low/med) MED Date Received: 5/ 9/91

% Moisture: not dec. 49. Date Analyzed: 6/ 6/91

Column: (pack/cap) PACK Dilution Factor: 1.00

CAS NO.	COMPOUND	CONCENTRATION UNITS: (ug/L or ug/Kg) UG/KG	Q
74-87-3	CHLOROMETHANE	2500.	U
74-83-9	BROMOMETHANE	2500.	U
75-01-4	VINYL CHLORIDE	2500.	U
75-00-3	CHLOROETHANE	2500.	U
75-09-2	METHYLENE CHLORIDE	330.	J D
67-64-1	ACETONE	2500.	U
75-15-0	CARBON DISULFIDE	1200.	U
75-35-4	1,1-DICHLOROETHENE	1200.	U
75-34-3	1,1-DICHLOROETHANE	1200.	U
540-59-0	1,2-DICHLOROETHENE (TOTAL)	1200.	U
67-66-3	CHLOROFORM	1200.	U
107-06-2	1,2-DICHLOROETHANE	1200.	U
78-93-3	2-BUTANONE	2500.	U
71-55-6	1,1,1-TRICHLOROETHANE	1200.	U
56-23-5	CARBON TETRACHLORIDE	1200.	U
108-05-4	VINYL ACETATE	2500.	U
75-27-4	BROMODICHLOROMETHANE	1200.	U
78-87-5	1,2-DICHLOROPROPANE	1200.	U
10061-01-5	CIS-1,3-DICHLOROPROPENE	1200.	U
79-01-6	TRICHLOROETHENE	1200.	U
124-48-1	DIBROMOCHLOROMETHANE	1200.	U
79-00-5	1,1,2-TRICHLOROETHANE	1200.	U
71-43-2	BENZENE	1200.	U
10061-02-6	TRANS-1,3-DICHLOROPROPENE	1200.	U
75-25-2	BROMOFORM	1200.	U
108-10-1	4-METHYL-2-PENTANONE	2500.	U
591-78-6	2-HEXANONE	2500.	U
127-18-4	TETRACHLOROETHENE	1200.	U
79-34-5	1,1,2,2-TETRACHLOROETHANE	1200.	U
108-88-3	TOLUENE	1200.	U
108-90-7	CHLOROBENZENE	1200.	U
100-41-4	ETHYLBENZENE	1200.	U
100-42-5	STYRENE	1200.	U
1330-20-7	XYLENE (TOTAL)	1200.	U

1E

VOLATILE ORGANICS ANALYSIS DATA SHEET
TENTATIVELY IDENTIFIED COMPOUNDS

EPA SAMPLE NO.

ES391 DL

0272

Lab Name: PEI Contract: 68-D9-0037

Lab Code: PEI Case No.: 16377 SAS No.: SDG No.: EHM01

Matrix: (soil/water) SOIL Lab Sample ID: X1-05-070-13B

Sample wt/vol: 4.000 (g/mL) G Lab File ID: ES391DL

Level: (low/med) MED Date Received: 5/ 9/91

% Moisture: not dec. 49. Date Analyzed: 6/ 6/91

Column: (pack/cap) PACK Dilution Factor: 1.00

Number TICs found: 0 CONCENTRATION UNITS: (ug/L or ug/Kg) UG/KG

	CAS NUMBER	COMPOUND NAME	RT	EST. CONC.	Q
1.					
2.					
3.					
4.					
5.					
6.					
7.					
8.					
9.					
10.					
11.					
12.					
13.					
14.					
15.					
16.					
17.					
18.					
19.					
20.					
21.					
22.					
23.					
24.					
25.					
26.					
27.					
28.					
29.					
30.					

1B
SEMIVOLATILE ORGANICS ANALYSIS DATA SHEET

EPA SAMPLE NO. 0555

EMH01

Lab Name: PEI Contract: 68-D9-0037

Lab Code: PEI Case No.: 16377 SAS No.: SDG No.: EHM01

Matrix: (soil/water) WATER Lab Sample ID: X1-05-070-01A

Sample wt/vol: 1000.0 (g/mL) ML Lab File ID: EHM01

Level: (low/med) LOW Date Received: 5/ 9/91

% Moisture: not dec. 100. dec.____ Date Extracted: 5/14/91

Extraction: (SepF/Cont/Sonc) CONT Date Analyzed: 6/11/91

GPC Cleanup: (Y/N) N pH: 7.0 Dilution Factor: 1.00

CAS NO.	COMPOUND	CONCENTRATION UNITS: (ug/L or ug/Kg) UG/L	Q
108-95-2	Phenol	10.	U
111-44-4	bis(2-Chloroethyl)ether	10.	U
95-57-8	2-Chlorophenol	10.	U
541-73-1	1,3-Dichlorobenzene	10.	U
106-46-7	1,4-Dichlorobenzene	10.	U
100-51-6	Benzyl alcohol	10.	U
95-50-1	1,2-Dichlorobenzene	10.	U
95-48-7	2-Methylphenol	10.	U
108-60-1	bis(2-Chloroisopropyl)ether	10.	U
106-44-5	4-Methylphenol	10.	U
621-64-7	N-Nitroso-di-n-propylamine	10.	U
67-72-1	Hexachloroethane	10.	U
98-95-3	Nitrobenzene	10.	U
78-59-1	Isophorone	10.	U
88-75-5	2-Nitrophenol	10.	U
105-67-9	2,4-Dimethylphenol	10.	U
65-85-0	Benzoic acid	50.	U
111-91-1	bis(2-Chloroethoxy)methane	10.	U
120-83-2	2,4-Dichlorophenol	10.	U
120-82-1	1,2,4-Trichlorobenzene	10.	U
91-20-3	Naphthalene	10.	U
106-47-8	4-Chloroaniline	10.	U
87-68-3	Hexachlorobutadiene	10.	U
59-50-7	4-Chloro-3-methylphenol	10.	U
91-57-6	2-Methylnaphthalene	10.	U
77-47-4	Hexachlorocyclopentadiene	10.	U
88-06-2	2,4,6-Trichlorophenol	10.	U
95-95-4	2,4,5-Trichlorophenol	50.	U
91-58-7	2-Chloronaphthalene	10.	U
88-74-4	2-Nitroaniline	50.	U
131-11-3	Dimethylphthalate	10.	U
208-96-8	Acenaphthylene	10.	U
606-20-2	2,6-Dinitrotoluene	10.	U

1C

SEMIVOLATILE ORGANICS ANALYSIS DATA SHEET

EPA SAMPLE NO. 0556

EMH01

Lab Name: PEI Contract: 68-D9-0037

Lab Code: PEI Case No.: 16377 SAS No.: SDG No.: EHM01

Matrix: (soil/water) WATER Lab Sample ID: X1-05-070-01A

Sample wt/vol: 1000.0 (g/mL) ML Lab File ID: EHM01

Level: (low/med) LOW Date Received: 5/ 9/91

% Moisture: not dec. 100. dec._____ Date Extracted: 5/14/91

Extraction: (SepF/Cont/Sonc) CONT Date Analyzed: 6/11/91

GPC Cleanup: (Y/N) N pH: 7.0 Dilution Factor: 1.00

CAS NO.	COMPOUND	CONCENTRATION UNITS: (ug/L or ug/Kg) UG/L	Q
99-09-2	3-Nitroaniline	50.	U
83-32-9	Acenaphthene	10.	U
51-28-5	2,4-Dinitrophenol	50.	U
100-02-7	4-Nitrophenol	50.	U
132-64-9	Dibenzofuran	10.	U
121-14-2	2,4-Dinitrotoluene	10.	U
84-66-2	Diethylphthalate	10.	U
7005-72-3	4-Chlorophenyl-phenylether	10.	U
86-73-7	Fluorene	10.	U
100-01-6	4-Nitroaniline	50.	U
534-52-1	4,6-Dinitro-2-methylphenol	50.	U
86-30-6	N-Nitrosodiphenylamine (1)	10.	U
101-55-3	4-Bromophenyl-phenylether	10.	U
118-74-1	Hexachlorobenzene	10.	U
87-86-5	Pentachlorophenol	50.	U
85-01-8	Phenanthrene	10.	U
120-12-7	Anthracene	10.	U
84-74-2	Di-n-butylphthalate	10.	U
206-44-0	Fluoranthene	10.	U
129-00-0	Pyrene	10.	U
85-68-7	Butylbenzylphthalate	10.	U
91-94-1	3,3'-Dichlorobenzidine	20.	U
56-55-3	Benzo(a)anthracene	10.	U
218-01-9	Chrysene	10.	U
117-81-7	bis(2-Ethylhexyl)phthalate	10.	U
117-84-0	Di-n-octylphthalate	10.	U
205-99-2	Benzo(b)fluoranthene	10.	U
207-08-9	Benzo(k)fluoranthene	10.	U
50-32-8	Benzo(a)pyrene	10.	U
193-39-5	Indeno(1,2,3-cd)pyrene	10.	U
53-70-3	Dibenz(a,h)anthracene	10.	U
191-24-2	Benzo(g,h,i)perylene	10.	U

(1) - Cannot be separated from diphenylamine

1F

SEMIVOLATILE ORGANICS ANALYSIS DATA SHEET
TENTATIVELY IDENTIFIED COMPOUNDS

EPA SAMPLE NO.

EMH01

0557

Lab Name: PEI Contract: 68-D9-0037

Lab Code: PEI Case No.: 16377 SAS No.: SDG No.: EHM01

Matrix: (soil/water) WATER Lab Sample ID: X1-05-070-01A

Sample wt/vol: 1000.0 (g/mL) ML Lab File ID: EHM01

Level: (low/med) LOW Date Received: 5/ 9/91

% Moisture: not dec. 100. dec._____ Date Extracted: 5/14/91

Extraction: (SepF/Cont/Sonc) CONT Date Analyzed: 6/11/91

GPC Cleanup: (Y/N) N pH: 7.0 Dilution Factor: 1.00

Number TICs found: 6

CONCENTRATION UNITS:
(ug/L or ug/Kg) UG/L

CAS NUMBER	COMPOUND NAME	RT	EST. CONC.	Q
1. - -	UNKNOWN	12.98	10.	J
2. - -	UNKNOWN	22.05	20.	J
3. - -	UNKNOWN AROMATIC	28.75	20.	J
4. - -	UNKNOWN AROMATIC	29.33	10.	J
5. - -	UNKNOWN	31.18	300.	J
6. - -	UNKNOWN PHTHALATE	32.82	10.	J
7.				
8.				
9.				
10.				
11.				
12.				
13.				
14.				
15.				
16.				
17.				
18.				
19.				
20.				
21.				
22.				
23.				
24.				
25.				
26.				
27.				
28.				
29.				
30.				

1B
SEMIVOLATILE ORGANICS ANALYSIS DATA SHEET

EPA SAMPLE NO. 0654

EHW88

Lab Name: PEI Contract: 68-D9-0037

Lab Code: PEI Case No.: 16377 SAS No.: SDG No.: EHM01

Matrix: (soil/water) SOIL Lab Sample ID: X1-05-070-05A

Sample wt/vol: 30.1 (g/mL) G Lab File ID: EHW88

Level: (low/med) LOW Date Received: 5/ 9/91

% Moisture: not dec. 57. dec.____ Date Extracted: 5/19/91

Extraction: (SepF/Cont/Sonc) SONC Date Analyzed: 6/13/91

GPC Cleanup: (Y/N) Y pH: 7.0 Dilution Factor: 1.00

CAS NO.	COMPOUND	CONCENTRATION UNITS: (ug/L or ug/Kg) UG/KG	Q
108-95-2	Phenol	330.	U
111-44-4	bis(2-Chloroethyl)ether	330.	U
95-57-8	2-Chlorophenol	330.	U
541-73-1	1,3-Dichlorobenzene	330.	U
106-46-7	1,4-Dichlorobenzene	330.	U
100-51-6	Benzyl alcohol	330.	U
95-50-1	1,2-Dichlorobenzene	330.	U
95-48-7	2-Methylphenol	330.	U
108-60-1	bis(2-Chloroisopropyl)ether	330.	U
106-44-5	4-Methylphenol	330.	U
621-64-7	N-Nitroso-di-n-propylamine	330.	U
67-72-1	Hexachloroethane	330.	U
98-95-3	Nitrobenzene	330.	U
78-59-1	Isophorone	330.	U
88-75-5	2-Nitrophenol	330.	U
105-67-9	2,4-Dimethylphenol	330.	U
65-85-0	Benzoic acid	1700.	U
111-91-1	bis(2-Chloroethoxy)methane	330.	U
120-83-2	2,4-Dichlorophenol	330.	U
120-82-1	1,2,4-Trichlorobenzene	330.	U
91-20-3	Naphthalene	330.	U
106-47-8	4-Chloroaniline	330.	U
87-68-3	Hexachlorobutadiene	330.	U
59-50-7	4-Chloro-3-methylphenol	330.	U
91-57-6	2-Methylnaphthalene	330.	U
77-47-4	Hexachlorocyclopentadiene	330.	U
88-06-2	2,4,6-Trichlorophenol	330.	U
95-95-4	2,4,5-Trichlorophenol	1700.	U
91-58-7	2-Chloronaphthalene	330.	U
88-74-4	2-Nitroaniline	1700.	U
131-11-3	Dimethylphthalate	330.	U
208-96-8	Acenaphthylene	330.	U
606-20-2	2,6-Dinitrotoluene	330.	U

1C

SEMIVOLATILE ORGANICS ANALYSIS DATA SHEET

EPA SAMPLE NO.

EHW88

0655

Lab Name: PEI Contract: 68-D9-0037

Lab Code: PEI Case No.: 16377 SAS No.: SDG No.: EHM01

Matrix: (soil/water) SOIL Lab Sample ID: X1-05-070-05A

Sample wt/vol: 30.1 (g/mL) G Lab File ID: EHW88

Level: (low/med) LOW Date Received: 5/ 9/91

% Moisture: not dec. 57. dec._____ Date Extracted: 5/19/91

Extraction: (SepF/Cont/Sonc) SONC Date Analyzed: 6/13/91

GPC Cleanup: (Y/N) Y pH: 7.0 Dilution Factor: 1.00

CAS NO.	COMPOUND	CONCENTRATION UNITS: (ug/L or ug/Kg) UG/KG	Q
99-09-2	3-Nitroaniline	1700.	U
83-32-9	Acenaphthene	330.	U
51-28-5	2,4-Dinitrophenol	1700.	U
100-02-7	4-Nitrophenol	1700.	U
132-64-9	Dibenzofuran	330.	U
121-14-2	2,4-Dinitrotoluene	330.	U
84-66-2	Diethylphthalate	330.	U
7005-72-3	4-Chlorophenyl-phenylether	330.	U
86-73-7	Fluorene	330.	U
100-01-6	4-Nitroaniline	1700.	U
534-52-1	4,6-Dinitro-2-methylphenol	1700.	U
86-30-6	N-Nitrosodiphenylamine (1)	330.	U
101-55-3	4-Bromophenyl-phenylether	330.	U
118-74-1	Hexachlorobenzene	330.	U
87-86-5	Pentachlorophenol	1700.	U
85-01-8	Phenanthrene	330.	U
120-12-7	Anthracene	330.	U
84-74-2	Di-n-butylphthalate	330.	U
206-44-0	Fluoranthene	330.	U
129-00-0	Pyrene	330.	U
85-68-7	Butylbenzylphthalate	330.	U
91-94-1	3,3'-Dichlorobenzidine	670.	U
56-55-3	Benzo(a)anthracene	330.	U
218-01-9	Chrysene	330.	U
117-81-7	bis(2-Ethylhexyl)phthalate	330.	U
117-84-0	Di-n-octylphthalate	330.	U
205-99-2	Benzo(b)fluoranthene	330.	U
207-08-9	Benzo(k)fluoranthene	330.	U
50-32-8	Benzo(a)pyrene	330.	U
193-39-5	Indeno(1,2,3-cd)pyrene	330.	U
53-70-3	Dibenz(a,h)anthracene	330.	U
191-24-2	Benzo(g,h,i)perylene	330.	U

(1) - Cannot be separated from diphenylamine

1F

SEMIVOLATILE ORGANICS ANALYSIS DATA SHEET
TENTATIVELY IDENTIFIED COMPOUNDS

EPA SAMPLE NO. 0656

EHW88

Lab Name: PEI Contract: 68-D9-0037

Lab Code: PEI Case No.: 16377 SAS No.: SDG No.: EHM01

Matrix: (soil/water) SOIL Lab Sample ID: X1-05-070-05A

Sample wt/vol: 30.1 (g/mL) G Lab File ID: EHW88

Level: (low/med) LOW Date Received: 5/ 9/91

% Moisture: not dec. 57. dec._____ Date Extracted: 5/19/91

Extraction: (SepF/Cont/Sonc) SONC Date Analyzed: 6/13/91

GPC Cleanup: (Y/N) Y pH: 7.0 Dilution Factor: 1.00

Number TICs found: 0

CONCENTRATION UNITS:
(ug/L or ug/Kg) UG/KG

CAS NUMBER	COMPOUND NAME	RT	EST. CONC.	Q
1.				
2.				
3.				
4.				
5.				
6.				
7.				
8.				
9.				
10.				
11.				
12.				
13.				
14.				
15.				
16.				
17.				
18.				
19.				
20.				
21.				
22.				
23.				
24.				
25.				
26.				
27.				
28.				
29.				
30.				

1B
SEMIVOLATILE ORGANICS ANALYSIS DATA SHEET

EPA SAMPLE NO. 0664

EHW89

Lab Name: PEI Contract: 68-D9-0037

Lab Code: PEI Case No.: 16377 SAS No.: SDG No.: EHM01

Matrix: (soil/water) SOIL Lab Sample ID: X1-05-070-06A

Sample wt/vol: 30.1 (g/mL) G Lab File ID: EHW89

Level: (low/med) LOW Date Received: 5/ 9/91

% Moisture: not dec. 45. dec.____ Date Extracted: 5/19/91

Extraction: (SepF/Cont/Sonc) SONC Date Analyzed: 6/12/91

GPC Cleanup: (Y/N) Y pH: 5.0 Dilution Factor: 1.00

CAS NO.	COMPOUND	CONCENTRATION UNITS: (ug/L or ug/Kg) UG/KG	Q
108-95-2	Phenol	1200.	U
111-44-4	bis(2-Chloroethyl)ether	1200.	U
95-57-8	2-Chlorophenol	1200.	U
541-73-1	1,3-Dichlorobenzene	1200.	U
106-46-7	1,4-Dichlorobenzene	1200.	U
100-51-6	Benzyl alcohol	1200.	U
95-50-1	1,2-Dichlorobenzene	1200.	U
95-48-7	2-Methylphenol	1200.	U
108-60-1	bis(2-Chloroisopropyl)ether	1200.	U
106-44-5	4-Methylphenol	1200.	U
621-64-7	N-Nitroso-di-n-propylamine	1200.	U
67-72-1	Hexachloroethane	1200.	U
98-95-3	Nitrobenzene	1200.	U
78-59-1	Isophorone	1200.	U
88-75-5	2-Nitrophenol	1200.	U
105-67-9	2,4-Dimethylphenol	1200.	U
65-85-0	Benzoic acid	5800.	U
111-91-1	bis(2-Chloroethoxy)methane	1200.	U
120-83-2	2,4-Dichlorophenol	1200.	U
120-82-1	1,2,4-Trichlorobenzene	1200.	U
91-20-3	Naphthalene	1200.	U
106-47-8	4-Chloroaniline	1200.	U
87-68-3	Hexachlorobutadiene	1200.	U
59-50-7	4-Chloro-3-methylphenol	1200.	U
91-57-6	2-Methylnaphthalene	1200.	U
77-47-4	Hexachlorocyclopentadiene	1200.	U
88-06-2	2,4,6-Trichlorophenol	1200.	U
95-95-4	2,4,5-Trichlorophenol	5800.	U
91-58-7	2-Chloronaphthalene	1200.	U
88-74-4	2-Nitroaniline	5800.	U
131-11-3	Dimethylphthalate	1200.	U
208-96-8	Acenaphthylene	1200.	U
606-20-2	2,6-Dinitrotoluene	1200.	U

1C
SEMIVOLATILE ORGANICS ANALYSIS DATA SHEET

EPA SAMPLE NO. 0665

EHW89

Lab Name: PEI Contract: 68-D9-0037

Lab Code: PEI Case No.: 16377 SAS No.: SDG No.: EHM01

Matrix: (soil/water) SOIL Lab Sample ID: X1-05-070-06A

Sample wt/vol: 30.1 (g/mL) G Lab File ID: EHW89

Level: (low/med) LOW Date Received: 5/ 9/91

% Moisture: not dec. 45. dec._____ Date Extracted: 5/19/91

Extraction: (SepF/Cont/Sonc) SONC Date Analyzed: 6/12/91

GPC Cleanup: (Y/N) Y pH: 5.0 Dilution Factor: 1.00

CAS NO.	COMPOUND	CONCENTRATION UNITS: (ug/L or ug/Kg) UG/KG	Q
99-09-2	3-Nitroaniline	5800.	U
83-32-9	Acenaphthene	1200.	U
51-28-5	2,4-Dinitrophenol	5800.	U
100-02-7	4-Nitrophenol	5800.	U
132-64-9	Dibenzofuran	1200.	U
121-14-2	2,4-Dinitrotoluene	1200.	U
84-66-2	Diethylphthalate	1200.	U
7005-72-3	4-Chlorophenyl-phenylether	1200.	U
86-73-7	Fluorene	1200.	U
100-01-6	4-Nitroaniline	5800.	U
534-52-1	4,6-Dinitro-2-methylphenol	5800.	U
86-30-6	N-Nitrosodiphenylamine (1)	1200.	U
101-55-3	4-Bromophenyl-phenylether	1200.	U
118-74-1	Hexachlorobenzene	1200.	U
87-86-5	Pentachlorophenol	5800.	U
85-01-8	Phenanthrene	1200.	U
120-12-7	Anthracene	1200.	U
84-74-2	Di-n-butylphthalate	1200.	U
206-44-0	Fluoranthene	1200.	J
129-00-0	Pyrene	970.	J
85-68-7	Butylbenzylphthalate	1200.	U
91-94-1	3,3'-Dichlorobenzidine	2400.	U
56-55-3	Benzo(a)anthracene	1200.	U
218-01-9	Chrysene	1200.	U
117-81-7	bis(2-Ethylhexyl)phthalate	1200.	U
117-84-0	Di-n-octylphthalate	1200.	U
205-99-2	Benzo(b)fluoranthene	1200.	U
207-08-9	Benzo(k)fluoranthene	1200.	U
50-32-8	Benzo(a)pyrene	1200.	U
193-39-5	Indeno(1,2,3-cd)pyrene	1200.	U
53-70-3	Dibenz(a,h)anthracene	1200.	U
191-24-2	Benzo(g,h,i)perylene	1200.	U

(1) - Cannot be separated from diphenylamine

1F

SEMIVOLATILE ORGANICS ANALYSIS DATA SHEET
TENTATIVELY IDENTIFIED COMPOUNDS

EPA SAMPLE NO.

EHW89

Lab Name: PEI Contract: 68-D9-0037

Lab Code: PEI Case No.: 16377 SAS No.: SDG No.: EHM01

Matrix: (soil/water) SOIL Lab Sample ID: X1-05-070-06A

Sample wt/vol: 30.1 (g/mL) G Lab File ID: EHW89

Level: (low/med) LOW Date Received: 5/ 9/91

% Moisture: not dec. 45. dec.____ Date Extracted: 5/19/91

Extraction: (SepF/Cont/Sonc) SONC Date Analyzed: 6/12/91

GPC Cleanup: (Y/N) Y pH: 5.0 Dilution Factor: 1.00

Number TICs found: 4

CONCENTRATION UNITS:
(ug/L or ug/Kg) UG/KG

CAS NUMBER	COMPOUND NAME	RT	EST. CONC.	Q
1. - -	UNKNOWN U	19.35	700.	J
2. - -	UNKNOWN	27.17	6000.	J
3. - -	UNKNOWN	31.15	3000.	J
4. - -	UNKNOWN	34.32	900.	J
5.				
6.				
7.				
8.				
9.				
10.				
11.				
12.				
13.				
14.				
15.				
16.				
17.				
18.				
19.				
20.				
21.				
22.				
23.				
24.				
25.				
26.				
27.				
28.				
29.				
30.				

1B
SEMIVOLATILE ORGANICS ANALYSIS DATA SHEET

EPA SAMPLE NO. 0681

EHW90

Lab Name: PEI Contract: 68-D9-0037

Lab Code: PEI Case No.: 16377 SAS No.: SDG No.: EHM01

Matrix: (soil/water) SOIL Lab Sample ID: X1-05-070-07A

Sample wt/vol: 30.0 (g/mL) G Lab File ID: EHW90

Level: (low/med) LOW Date Received: 5/ 9/91

% Moisture: not dec. 21. dec.____ Date Extracted: 5/19/91

Extraction: (SepF/Cont/Sonc) SONC Date Analyzed: 6/12/91

GPC Cleanup: (Y/N) Y pH: 5.0 Dilution Factor: 1.00

CAS NO.	COMPOUND	CONCENTRATION UNITS: (ug/L or ug/Kg) UG/KG	Q
108-95-2	Phenol	830.	U
111-44-4	bis(2-Chloroethyl)ether	830.	U
95-57-8	2-Chlorophenol	830.	U
541-73-1	1,3-Dichlorobenzene	830.	U
106-46-7	1,4-Dichlorobenzene	830.	U
100-51-6	Benzyl alcohol	830.	U
95-50-1	1,2-Dichlorobenzene	830.	U
95-48-7	2-Methylphenol	830.	U
108-60-1	bis(2-Chloroisopropyl)ether	830.	U
106-44-5	4-Methylphenol	830.	U
621-64-7	N-Nitroso-di-n-propylamine	830.	U
67-72-1	Hexachloroethane	830.	U
98-95-3	Nitrobenzene	830.	U
78-59-1	Isophorone	830.	U
88-75-5	2-Nitrophenol	830.	U
105-67-9	2,4-Dimethylphenol	830.	U
65-85-0	Benzoic acid	4000.	U
111-91-1	bis(2-Chloroethoxy)methane	830.	U
120-83-2	2,4-Dichlorophenol	830.	U
120-82-1	1,2,4-Trichlorobenzene	830.	U
91-20-3	Naphthalene	830.	U
106-47-8	4-Chloroaniline	830.	U
87-68-3	Hexachlorobutadiene	830.	U
59-50-7	4-Chloro-3-methylphenol	830.	U
91-57-6	2-Methylnaphthalene	830.	U
77-47-4	Hexachlorocyclopentadiene	830.	U
88-06-2	2,4,6-Trichlorophenol	830.	U
95-95-4	2,4,5-Trichlorophenol	4000.	U
91-58-7	2-Chloronaphthalene	830.	U
88-74-4	2-Nitroaniline	4000.	U
131-11-3	Dimethylphthalate	830.	U
208-96-8	Acenaphthylene	830.	U
606-20-2	2,6-Dinitrotoluene	830.	U

1C

SEMIVOLATILE ORGANICS ANALYSIS DATA SHEET

EPA SAMPLE NO.

EHW90

0682

Lab Name: PEI Contract: 68-D9-0037

Lab Code: PEI Case No.: 16377 SAS No.: SDG No.: EHM01

Matrix: (soil/water) SOIL Lab Sample ID: X1-05-070-07A

Sample wt/vol: 30.0 (g/mL) G Lab File ID: EHW90

Level: (low/med) LOW Date Received: 5/ 9/91

% Moisture: not dec. 21. dec._____ Date Extracted: 5/19/91

Extraction: (SepF/Cont/Sonc) SONC Date Analyzed: 6/12/91

GPC Cleanup: (Y/N) Y pH: 5.0 Dilution Factor: 1.00

CAS NO.	COMPOUND	CONCENTRATION UNITS: (ug/L or ug/Kg) UG/KG	Q
99-09-2	3-Nitroaniline	4000.	U
83-32-9	Acenaphthene	830.	U
51-28-5	2,4-Dinitrophenol	4000.	U
100-02-7	4-Nitrophenol	4000.	U
132-64-9	Dibenzofuran	830.	U
121-14-2	2,4-Dinitrotoluene	830.	U
84-66-2	Diethylphthalate	830.	U
7005-72-3	4-Chlorophenyl-phenylether	830.	U
86-73-7	Fluorene	830.	U
100-01-6	4-Nitroaniline	4000.	U
534-52-1	4,6-Dinitro-2-methylphenol	4000.	U
86-30-6	N-Nitrosodiphenylamine (1)	830.	U
101-55-3	4-Bromophenyl-phenylether	830.	U
118-74-1	Hexachlorobenzene	830.	U
87-86-5	Pentachlorophenol	4000.	U
85-01-8	Phenanthrene	830.	U
120-12-7	Anthracene	830.	U
84-74-2	Di-n-butylphthalate	830.	U
206-44-0	Fluoranthene	830.	U
129-00-0	Pyrene	830.	U
85-68-7	Butylbenzylphthalate	830.	U
91-94-1	3,3'-Dichlorobenzidine	1700.	U
56-55-3	Benzo(a)anthracene	830.	U
218-01-9	Chrysene	830.	U
117-81-7	bis(2-Ethylhexyl)phthalate	830.	U
117-84-0	Di-n-octylphthalate	830.	U
205-99-2	Benzo(b)fluoranthene	830.	U
207-08-9	Benzo(k)fluoranthene	830.	U
50-32-8	Benzo(a)pyrene	830.	U
193-39-5	Indeno(1,2,3-cd)pyrene	830.	U
53-70-3	Dibenz(a,h)anthracene	830.	U
191-24-2	Benzo(g,h,i)perylene	830.	U

(1) - Cannot be separated from diphenylamine

1F

SEMIVOLATILE ORGANICS ANALYSIS DATA SHEET
TENTATIVELY IDENTIFIED COMPOUNDS

EPA SAMPLE NO.

EHW90

0083

Lab Name: PEI Contract: 68-D9-0037

Lab Code: PEI Case No.: 16377 SAS No.: SDG No.: EHM01

Matrix: (soil/water) SOIL Lab Sample ID: X1-05-070-07A

Sample wt/vol: 30.0 (g/mL) G Lab File ID: EHW90

Level: (low/med) LOW Date Received: 5/ 9/91

% Moisture: not dec. 21. dec._____ Date Extracted: 5/19/91

Extraction: (SepF/Cont/Sonc) SONC Date Analyzed: 6/12/91

GPC Cleanup: (Y/N) Y pH: 5.0 Dilution Factor: 1.00

Number TICs found: 1

CONCENTRATION UNITS:
(ug/L or ug/Kg) UG/KG

	CAS NUMBER	COMPOUND NAME	RT	EST. CONC.	Q
1.	- -	UNKNOWN	31.13	5000.	J
2.					
3.					
4.					
5.					
6.					
7.					
8.					
9.					
10.					
11.					
12.					
13.					
14.					
15.					
16.					
17.					
18.					
19.					
20.					
21.					
22.					
23.					
24.					
25.					
26.					
27.					
28.					
29.					
30.					

1B
SEMIVOLATILE ORGANICS ANALYSIS DATA SHEET

EPA SAMPLE NO.

EHW91

0C9

Lab Name: PEI Contract: 68-D9-0037

Lab Code: PEI Case No.: 16377 SAS No.: SDG No.: EHM01

Matrix: (soil/water) WATER Lab Sample ID: X1-05-070-15A

Sample wt/vol: 1000.0 (g/mL) ML Lab File ID: EHW91

Level: (low/med) LOW Date Received: 5/10/91

% Moisture: not dec. 100. dec.____ Date Extracted: 5/14/91

Extraction: (SepF/Cont/Sonc) CONT Date Analyzed: 6/13/91

GPC Cleanup: (Y/N) N pH: 7.0 Dilution Factor: 1.00

CAS NO.	COMPOUND	CONCENTRATION UNITS: (ug/L or ug/Kg) UG/L	Q
108-95-2	Phenol	10.	U
111-44-4	bis(2-Chloroethyl)ether	10.	U
95-57-8	2-Chlorophenol	10.	U
541-73-1	1,3-Dichlorobenzene	10.	U
106-46-7	1,4-Dichlorobenzene	10.	U
100-51-6	Benzyl alcohol	10.	U
95-50-1	1,2-Dichlorobenzene	10.	U
95-48-7	2-Methylphenol	10.	U
108-60-1	bis(2-Chloroisopropyl)ether	10.	U
106-44-5	4-Methylphenol	10.	U
621-64-7	N-Nitroso-di-n-propylamine	10.	U
67-72-1	Hexachloroethane	10.	U
98-95-3	Nitrobenzene	10.	U
78-59-1	Isophorone	10.	U
88-75-5	2-Nitrophenol	10.	U
105-67-9	2,4-Dimethylphenol	10.	U
65-85-0	Benzoic acid	50.	U
111-91-1	bis(2-Chloroethoxy)methane	10.	U
120-83-2	2,4-Dichlorophenol	10.	U
120-82-1	1,2,4-Trichlorobenzene	10.	U
91-20-3	Naphthalene	10.	U
106-47-8	4-Chloroaniline	10.	U
87-68-3	Hexachlorobutadiene	10.	U
59-50-7	4-Chloro-3-methylphenol	10.	U
91-57-6	2-Methylnaphthalene	10.	U
77-47-4	Hexachlorocyclopentadiene	10.	U
88-06-2	2,4,6-Trichlorophenol	10.	U
95-95-4	2,4,5-Trichlorophenol	50.	U
91-58-7	2-Chloronaphthalene	10.	U
88-74-4	2-Nitroaniline	50.	U
131-11-3	Dimethylphthalate	10.	U
208-96-8	Acenaphthylene	10.	U
606-20-2	2,6-Dinitrotoluene	10.	U

1C
SEMIVOLATILE ORGANICS ANALYSIS DATA SHEET

EPA SAMPLE NO.

EHW91

0093

Lab Name: PEI Contract: 68-D9-0037

Lab Code: PEI Case No.: 16377 SAS No.: SDG No.: EHM01

Matrix: (soil/water) WATER Lab Sample ID: X1-05-070-150

Sample wt/vol: 1000.0 (g/mL) ML Lab File ID: EHW91

Level: (low/med) LOW Date Received: 5/10/91

% Moisture: not dec. 100. dec.____ Date Extracted: 5/14/91

Extraction: (SepF/Cont/Sonc) CONT Date Analyzed: 6/13/91

GPC Cleanup: (Y/N) N pH: 7.0 Dilution Factor: 1.00

RECEIVED
JUN 21 1991
CENTRAL REGIONAL LAB.
536 S. CLARK ST.
CHICAGO, ILLINOIS 60605

CAS NO.	COMPOUND	CONCENTRATION UNITS: (ug/L or ug/Kg) UG/L	Q
99-09-2	3-Nitroaniline	50.	U
83-32-9	Acenaphthene	10.	U
51-28-5	2,4-Dinitrophenol	50.	U
100-02-7	4-Nitrophenol	50.	U
132-64-9	Dibenzofuran	10.	U
121-14-2	2,4-Dinitrotoluene	10.	U
84-66-2	Diethylphthalate	10.	U
7005-72-3	4-Chlorophenyl-phenylether	10.	U
86-73-7	Fluorene	10.	U
100-01-6	4-Nitroaniline	50.	U
534-52-1	4,6-Dinitro-2-methylphenol	50.	U
86-30-6	N-Nitrosodiphenylamine (1)	10.	U
101-55-3	4-Bromophenyl-phenylether	10.	U
118-74-1	Hexachlorobenzene	10.	U
87-86-5	Pentachlorophenol	50.	U
85-01-8	Phenanthrene	10.	U
120-12-7	Anthracene	10.	U
84-74-2	Di-n-butylphthalate	10.	U
206-44-0	Fluoranthene	10.	U
129-00-0	Pyrene	10.	U
85-68-7	Butylbenzylphthalate	10.	U
91-94-1	3,3'-Dichlorobenzidine	20.	U
56-55-3	Benzo(a)anthracene	10.	U
218-01-9	Chrysene	10.	U
117-81-7	bis(2-Ethylhexyl)phthalate	10.	U
117-84-0	Di-n-octylphthalate	10.	U
205-99-2	Benzo(b)fluoranthene	10.	U
207-08-9	Benzo(k)fluoranthene	10.	U
50-32-8	Benzo(a)pyrene	10.	U
193-39-5	Indeno(1,2,3-cd)pyrene	10.	U
53-70-3	Dibenz(a,h)anthracene	10.	U
191-24-2	Benzo(g,h,i)perylene	10.	U

(1) - Cannot be separated from diphenylamine

1F

SEMIVOLATILE ORGANICS ANALYSIS DATA SHEET
TENTATIVELY IDENTIFIED COMPOUNDS

EPA SAMPLE NO.

EHW91

0694

Lab Name: PEI Contract: 68-D9-0037

Lab Code: PEI Case No.: 16377 SAS No.: SDG No.: EHM01

Matrix: (soil/water) WATER Lab Sample ID: X1-05-070-15A

Sample wt/vol: 1000.0 (g/mL) ML Lab File ID: EHW91

Level: (low/med) LOW Date Received: 5/10/91

% Moisture: not dec. 100. dec._____ Date Extracted: 5/14/91

Extraction: (SepF/Cont/Sonc) CONT Date Analyzed: 6/13/91

GPC Cleanup: (Y/N) N pH: 7.0 Dilution Factor: 1.00

Number TICs found: 0

CONCENTRATION UNITS:
(ug/L or ug/Kg) UG/L

	CAS NUMBER	COMPOUND NAME	RT	EST. CONC.	Q
1.					
2.					
3.					
4.					
5.					
6.					
7.					
8.					
9.					
10.					
11.					
12.					
13.					
14.					
15.					
16.					
17.					
18.					
19.					
20.					
21.					
22.					
23.					
24.					
25.					
26.					
27.					
28.					
29.					
30.					

1B

SEMIVOLATILE ORGANICS ANALYSIS DATA SHEET

EPA SAMPLE NO. 6702

EHW92

Lab Name: PEI Contract: 68-D9-0037

Lab Code: PEI Case No.: 16377 SAS No.: SDG No.: EHM01

Matrix: (soil/water) WATER Lab Sample ID: X1-05-070-16A

Sample wt/vol: 1000.0 (g/mL) ML Lab File ID: EHW92

Level: (low/med) LOW Date Received: 5/10/91

% Moisture: not dec. 100. dec.____ Date Extracted: 5/14/91

Extraction: (SepF/Cont/Sonc) CONT Date Analyzed: 6/13/91

GPC Cleanup: (Y/N) N pH: 7.0 Dilution Factor: 1.00

CAS NO.	COMPOUND	CONCENTRATION UNITS: (ug/L or ug/Kg) UG/L	Q
108-95-2	Phenol	10.	U
111-44-4	bis(2-Chloroethyl)ether	10.	U
95-57-8	2-Chlorophenol	10.	U
541-73-1	1,3-Dichlorobenzene	10.	U
106-46-7	1,4-Dichlorobenzene	10.	U
100-51-6	Benzyl alcohol	10.	U
95-50-1	1,2-Dichlorobenzene	10.	U
95-48-7	2-Methylphenol	10.	U
108-60-1	bis(2-Chloroisopropyl)ether	10.	U
106-44-5	4-Methylphenol	10.	U
621-64-7	N-Nitroso-di-n-propylamine	10.	U
67-72-1	Hexachloroethane	10.	U
98-95-3	Nitrobenzene	10.	U
78-59-1	Isophorone	10.	U
88-75-5	2-Nitrophenol	10.	U
105-67-9	2,4-Dimethylphenol	10.	U
65-85-0	Benzoic acid	50.	U
111-91-1	bis(2-Chloroethoxy)methane	10.	U
120-83-2	2,4-Dichlorophenol	10.	U
120-82-1	1,2,4-Trichlorobenzene	10.	U
91-20-3	Naphthalene	10.	U
106-47-8	4-Chloroaniline	10.	U
87-68-3	Hexachlorobutadiene	10.	U
59-50-7	4-Chloro-3-methylphenol	10.	U
91-57-6	2-Methylnaphthalene	10.	U
77-47-4	Hexachlorocyclopentadiene	10.	U
88-06-2	2,4,6-Trichlorophenol	10.	U
95-95-4	2,4,5-Trichlorophenol	50.	U
91-58-7	2-Chloronaphthalene	10.	U
88-74-4	2-Nitroaniline	50.	U
131-11-3	Dimethylphthalate	10.	U
208-96-8	Acenaphthylene	10.	U
606-20-2	2,6-Dinitrotoluene	10.	U

1C
SEMIVOLATILE ORGANICS ANALYSIS DATA SHEET

EPA SAMPLE NO. 0703

EHW92

Lab Name: PEI Contract: 68-D9-0037

Lab Code: PEI Case No.: 16377 SAS No.: SDG No.: EHM01

Matrix: (soil/water) WATER Lab Sample ID: X1-05-070-16A

Sample wt/vol: 1000.0 (g/mL) ML Lab File ID: EHW92

Level: (low/med) LOW Date Received: 5/10/91

% Moisture: not dec. 100. dec.____ Date Extracted: 5/14/91

Extraction: (SepF/Cont/Sonc) CONT Date Analyzed: 6/13/91

GPC Cleanup: (Y/N) N pH: 7.0 Dilution Factor: 1.00

CAS NO.	COMPOUND	CONCENTRATION UNITS: (ug/L or ug/Kg) UG/L	Q
99-09-2	3-Nitroaniline	50.	U
83-32-9	Acenaphthene	10.	U
51-28-5	2,4-Dinitrophenol	50.	U
100-02-7	4-Nitrophenol	50.	U
132-64-9	Dibenzofuran	10.	U
121-14-2	2,4-Dinitrotoluene	10.	U
84-66-2	Diethylphthalate	10.	U
7005-72-3	4-Chlorophenyl-phenylether	10.	U
86-73-7	Fluorene	10.	U
100-01-6	4-Nitroaniline	50.	U
534-52-1	4,6-Dinitro-2-methylphenol	50.	U
86-30-6	N-Nitrosodiphenylamine (1)	10.	U
101-55-3	4-Bromophenyl-phenylether	10.	U
118-74-1	Hexachlorobenzene	10.	U
87-86-5	Pentachlorophenol	50.	U
85-01-8	Phenanthrene	10.	U
120-12-7	Anthracene	10.	U
84-74-2	Di-n-butylphthalate	10.	U
206-44-0	Fluoranthene	10.	U
129-00-0	Pyrene	10.	U
85-68-7	Butylbenzylphthalate	10.	U
91-94-1	3,3'-Dichlorobenzidine	20.	U
56-55-3	Benzo(a)anthracene	10.	U
218-01-9	Chrysene	10.	U
117-81-7	bis(2-Ethylhexyl)phthalate	10.	U
117-84-0	Di-n-octylphthalate	10.	U
205-99-2	Benzo(b)fluoranthene	10.	U
207-08-9	Benzo(k)fluoranthene	10.	U
50-32-8	Benzo(a)pyrene	10.	U
193-39-5	Indeno(1,2,3-cd)pyrene	10.	U
53-70-3	Dibenz(a,h)anthracene	10.	U
191-24-2	Benzo(g,h,i)perylene	10.	U

(1) - Cannot be separated from diphenylamine

1F

SEMIVOLATILE ORGANICS ANALYSIS DATA SHEET
TENTATIVELY IDENTIFIED COMPOUNDS

EPA SAMPLE NO.

EHW92

0704

Lab Name: PEI Contract: 68-D9-0037

Lab Code: PEI Case No.: 16377 SAS No.: SDG No.: EHM01

Matrix: (soil/water) WATER Lab Sample ID: X1-05-070-16A

Sample wt/vol: 1000.0 (g/mL) ML Lab File ID: EHW92

Level: (low/med) LOW Date Received: 5/10/91

% Moisture: not dec. 100. dec._____ Date Extracted: 5/14/91

Extraction: (SepF/Cont/Sonc) CONT Date Analyzed: 6/13/91

GPC Cleanup: (Y/N) N pH: 7.0 Dilution Factor: 1.00

Number TICs found: 0

CONCENTRATION UNITS:
(ug/L or ug/Kg) UG/L

	CAS NUMBER	COMPOUND NAME	RT	EST. CONC.	Q
1.					
2.					
3.					
4.					
5.					
6.					
7.					
8.					
9.					
10.					
11.					
12.					
13.					
14.					
15.					
16.					
17.					
18.					
19.					
20.					
21.					
22.					
23.					
24.					
25.					
26.					
27.					
28.					
29.					
30.					

1B
SEMIVOLATILE ORGANICS ANALYSIS DATA SHEET

EPA SAMPLE NO. 0712

EHW94

Lab Name: PEI Contract: 68-D9-0037

Lab Code: PEI Case No.: 16377 SAS No.: SDG No.: EHM01

Matrix: (soil/water) WATER Lab Sample ID: X1-05-070-17A

Sample wt/vol: 1000.0 (g/mL) ML Lab File ID: EHW94

Level: (low/med) LOW Date Received: 5/10/91

% Moisture: not dec. 100. dec.____ Date Extracted: 5/14/91

Extraction: (SepF/Cont/Sonc) CONT Date Analyzed: 6/13/91

GPC Cleanup: (Y/N) N pH: 7.0 Dilution Factor: 1.00

CAS NO.	COMPOUND	CONCENTRATION UNITS: (ug/L or ug/Kg) UG/L	Q
108-95-2	Phenol	10.	U
111-44-4	bis(2-Chloroethyl)ether	10.	U
95-57-8	2-Chlorophenol	10.	U
541-73-1	1,3-Dichlorobenzene	10.	U
106-46-7	1,4-Dichlorobenzene	10.	U
100-51-6	Benzyl alcohol	10.	U
95-50-1	1,2-Dichlorobenzene	10.	U
95-48-7	2-Methylphenol	10.	U
108-60-1	bis(2-Chloroisopropyl)ether	10.	U
106-44-5	4-Methylphenol	10.	U
621-64-7	N-Nitroso-di-n-propylamine	10.	U
67-72-1	Hexachloroethane	10.	U
98-95-3	Nitrobenzene	10.	U
78-59-1	Isophorone	10.	U
88-75-5	2-Nitrophenol	10.	U
105-67-9	2,4-Dimethylphenol	10.	U
65-85-0	Benzoic acid	50.	U
111-91-1	bis(2-Chloroethoxy)methane	10.	U
120-83-2	2,4-Dichlorophenol	10.	U
120-82-1	1,2,4-Trichlorobenzene	10.	U
91-20-3	Naphthalene	10.	U
106-47-8	4-Chloroaniline	10.	U
87-68-3	Hexachlorobutadiene	10.	U
59-50-7	4-Chloro-3-methylphenol	10.	U
91-57-6	2-Methylnaphthalene	10.	U
77-47-4	Hexachlorocyclopentadiene	10.	U
88-06-2	2,4,6-Trichlorophenol	10.	U
95-95-4	2,4,5-Trichlorophenol	50.	U
91-58-7	2-Chloronaphthalene	10.	U
88-74-4	2-Nitroaniline	50.	U
131-11-3	Dimethylphthalate	10.	U
208-96-8	Acenaphthylene	10.	U
606-20-2	2,6-Dinitrotoluene	10.	U

1C
SEMIVOLATILE ORGANICS ANALYSIS DATA SHEET

EPA SAMPLE NO.

EHW94

0713

Lab Name: PEI Contract: 68-D9-0037

Lab Code: PEI Case No.: 16377 SAS No.: SDG No.: EHM01

Matrix: (soil/water) WATER Lab Sample ID: X1-05-070-17A

Sample wt/vol: 1000.0 (g/mL) ML Lab File ID: EHW94

Level: (low/med) LOW Date Received: 5/10/91

% Moisture: not dec. 100. dec.____ Date Extracted: 5/14/91

Extraction: (SepF/Cont/Sonc) CONT Date Analyzed: 6/13/91

GPC Cleanup: (Y/N) N pH: 7.0 Dilution Factor: 1.00

CAS NO.	COMPOUND	CONCENTRATION UNITS: (ug/L or ug/Kg) UG/L	Q
99-09-2	3-Nitroaniline	50.	U
83-32-9	Acenaphthene	10.	U
51-28-5	2,4-Dinitrophenol	50.	U
100-02-7	4-Nitrophenol	50.	U
132-64-9	Dibenzofuran	10.	U
121-14-2	2,4-Dinitrotoluene	10.	U
84-66-2	Diethylphthalate	10.	U
7005-72-3	4-Chlorophenyl-phenylether	10.	U
86-73-7	Fluorene	10.	U
100-01-6	4-Nitroaniline	50.	U
534-52-1	4,6-Dinitro-2-methylphenol	50.	U
86-30-6	N-Nitrosodiphenylamine (1)	10.	U
101-55-3	4-Bromophenyl-phenylether	10.	U
118-74-1	Hexachlorobenzene	10.	U
87-86-5	Pentachlorophenol	50.	U
85-01-8	Phenanthrene	10.	U
120-12-7	Anthracene	10.	U
84-74-2	Di-n-butylphthalate	10.	U
206-44-0	Fluoranthene	10.	U
129-00-0	Pyrene	10.	U
85-68-7	Butylbenzylphthalate	10.	U
91-94-1	3,3'-Dichlorobenzidine	20.	U
56-55-3	Benzo(a)anthracene	10.	U
218-01-9	Chrysene	10.	U
117-81-7	bis(2-Ethylhexyl)phthalate	10.	U
117-84-0	Di-n-octylphthalate	10.	U
205-99-2	Benzo(b)fluoranthene	10.	U
207-08-9	Benzo(k)fluoranthene	10.	U
50-32-8	Benzo(a)pyrene	10.	U
193-39-5	Indeno(1,2,3-cd)pyrene	10.	U
53-70-3	Dibenz(a,h)anthracene	10.	U
191-24-2	Benzo(g,h,i)perylene	10.	U

(1) - Cannot be separated from diphenylamine

1F

SEMIVOLATILE ORGANICS ANALYSIS DATA SHEET
TENTATIVELY IDENTIFIED COMPOUNDS

EPA SAMPLE NO. 0714

EHW94

Lab Name: PEI Contract: 68-D9-0037

Lab Code: PEI Case No.: 16377 SAS No.: SDG No.: EHM01

Matrix: (soil/water) WATER Lab Sample ID: X1-05-070-17A

Sample wt/vol: 1000.0 (g/mL) ML Lab File ID: EHW94

Level: (low/med) LOW Date Received: 5/10/91

% Moisture: not dec. 100. dec._____ Date Extracted: 5/14/91

Extraction: (SepF/Cont/Sonc) CONT Date Analyzed: 6/13/91

GPC Cleanup: (Y/N) N pH: 7.0 Dilution Factor: 1.00

Number TICs found: 0

CONCENTRATION UNITS:
(ug/L or ug/Kg) UG/L

	CAS NUMBER	COMPOUND NAME	RT	EST. CONC.	Q
1.					
2.					
3.					
4.					
5.					
6.					
7.					
8.					
9.					
10.					
11.					
12.					
13.					
14.					
15.					
16.					
17.					
18.					
19.					
20.					
21.					
22.					
23.					
24.					
25.					
26.					
27.					
28.					
29.					
30.					

1B
SEMIVOLATILE ORGANICS ANALYSIS DATA SHEET

EPA SAMPLE NO. 0722

EJW99

Lab Name: PEI Contract: 68-D9-0037

Lab Code: PEI Case No.: 16377 SAS No.: SDG No.: EHM01

Matrix: (soil/water) WATER Lab Sample ID: X1-05-070-18A

Sample wt/vol: 1000.0 (g/mL) ML Lab File ID: EJW99

Level: (low/med) LOW Date Received: 5/10/91

% Moisture: not dec. 100. dec.____ Date Extracted: 5/14/91

Extraction: (SepF/Cont/Sonc) CONT Date Analyzed: 6/13/91

GPC Cleanup: (Y/N) N pH: 7.0 Dilution Factor: 1.00

CAS NO.	COMPOUND	CONCENTRATION UNITS: (ug/L or ug/Kg) UG/L	Q
108-95-2	Phenol	10.	U
111-44-4	bis(2-Chloroethyl)ether	10.	U
95-57-8	2-Chlorophenol	10.	U
541-73-1	1,3-Dichlorobenzene	10.	U
106-46-7	1,4-Dichlorobenzene	10.	U
100-51-6	Benzyl alcohol	10.	U
95-50-1	1,2-Dichlorobenzene	10.	U
95-48-7	2-Methylphenol	10.	U
108-60-1	bis(2-Chloroisopropyl)ether	10.	U
106-44-5	4-Methylphenol	10.	U
621-64-7	N-Nitroso-di-n-propylamine	10.	U
67-72-1	Hexachloroethane	10.	U
98-95-3	Nitrobenzene	10.	U
78-59-1	Isophorone	10.	U
88-75-5	2-Nitrophenol	10.	U
105-67-9	2,4-Dimethylphenol	10.	U
65-85-0	Benzoic acid	50.	U
111-91-1	bis(2-Chloroethoxy)methane	10.	U
120-83-2	2,4-Dichlorophenol	10.	U
120-82-1	1,2,4-Trichlorobenzene	10.	U
91-20-3	Naphthalene	10.	U
106-47-8	4-Chloroaniline	10.	U
87-68-3	Hexachlorobutadiene	10.	U
59-50-7	4-Chloro-3-methylphenol	10.	U
91-57-6	2-Methylnaphthalene	10.	U
77-47-4	Hexachlorocyclopentadiene	10.	U
88-06-2	2,4,6-Trichlorophenol	10.	U
95-95-4	2,4,5-Trichlorophenol	50.	U
91-58-7	2-Chloronaphthalene	10.	U
88-74-4	2-Nitroaniline	50.	U
131-11-3	Dimethylphthalate	10.	U
208-96-8	Acenaphthylene	10.	U
606-20-2	2,6-Dinitrotoluene	10.	U

1C
SEMIVOLATILE ORGANICS ANALYSIS DATA SHEET

EPA SAMPLE NO.

EJW99

0723

Lab Name: PEI Contract: 68-D9-0037

Lab Code: PEI Case No.: 16377 SAS No.: SDG No.: EHM01

Matrix: (soil/water) WATER Lab Sample ID: X1-05-070-18A

Sample wt/vol: 1000.0 (g/mL) ML Lab File ID: EJW99

Level: (low/med) LOW Date Received: 5/10/91

% Moisture: not dec. 100. dec.____ Date Extracted: 5/14/91

Extraction: (SepF/Cont/Sonc) CONT Date Analyzed: 6/13/91

GPC Cleanup: (Y/N) N pH: 7.0 Dilution Factor: 1.00

CAS NO.	COMPOUND	CONCENTRATION UNITS: (ug/L or ug/Kg) UG/L	Q
99-09-2	3-Nitroaniline	50.	U
83-32-9	Acenaphthene	10.	U
51-28-5	2,4-Dinitrophenol	50.	U
100-02-7	4-Nitrophenol	50.	U
132-64-9	Dibenzofuran	10.	U
121-14-2	2,4-Dinitrotoluene	10.	U
84-66-2	Diethylphthalate	10.	U
7005-72-3	4-Chlorophenyl-phenylether	10.	U
86-73-7	Fluorene	10.	U
100-01-6	4-Nitroaniline	50.	U
534-52-1	4,6-Dinitro-2-methylphenol	50.	U
86-30-6	N-Nitrosodiphenylamine (1)	10.	U
101-55-3	4-Bromophenyl-phenylether	10.	U
118-74-1	Hexachlorobenzene	10.	U
87-86-5	Pentachlorophenol	50.	U
85-01-8	Phenanthrene	10.	U
120-12-7	Anthracene	10.	U
84-74-2	Di-n-butylphthalate	10.	U
206-44-0	Fluoranthene	10.	U
129-00-0	Pyrene	10.	U
85-68-7	Butylbenzylphthalate	10.	U
91-94-1	3,3'-Dichlorobenzidine	20.	U
56-55-3	Benzo(a)anthracene	10.	U
218-01-9	Chrysene	10.	U
117-81-7	bis(2-Ethylhexyl)phthalate	10.	U
117-84-0	Di-n-octylphthalate	10.	U
205-99-2	Benzo(b)fluoranthene	10.	U
207-08-9	Benzo(k)fluoranthene	10.	U
50-32-8	Benzo(a)pyrene	10.	U
193-39-5	Indeno(1,2,3-cd)pyrene	10.	U
53-70-3	Dibenz(a,h)anthracene	10.	U
191-24-2	Benzo(g,h,i)perylene	10.	U

(1) - Cannot be separated from diphenylamine

1F

SEMIVOLATILE ORGANICS ANALYSIS DATA SHEET
TENTATIVELY IDENTIFIED COMPOUNDS

EPA SAMPLE NO.

EJW99

0724

Lab Name: PEI Contract: 68-D9-0037

Lab Code: PEI Case No.: 16377 SAS No.: SDG No.: EHM01

Matrix: (soil/water) WATER Lab Sample ID: X1-05-070-18A

Sample wt/vol: 1000.0 (g/mL) ML Lab File ID: EJW99

Level: (low/med) LOW Date Received: 5/10/91

% Moisture: not dec. 100. dec._____ Date Extracted: 5/14/91

Extraction: (SepF/Cont/Sonc) CONT Date Analyzed: 6/13/91

GPC Cleanup: (Y/N) N pH: 7.0 Dilution Factor: 1.00

Number TICs found: 0

CONCENTRATION UNITS:
(ug/L or ug/Kg) UG/L

	CAS NUMBER	COMPOUND NAME	RT	EST. CONC.	Q
1.					
2.					
3.					
4.					
5.					
6.					
7.					
8.					
9.					
10.					
11.					
12.					
13.					
14.					
15.					
16.					
17.					
18.					
19.					
20.					
21.					
22.					
23.					
24.					
25.					
26.					
27.					
28.					
29.					
30.					

1B
SEMIVOLATILE ORGANICS ANALYSIS DATA SHEET

EPA SAMPLE NO.

EMN98

Lab Name: PEI Contract: 68-D9-0037

Lab Code: PEI Case No.: 16377 SAS No.: SDG No.: EHM01

Matrix: (soil/water) WATER Lab Sample ID: X1-05-070-19A

Sample wt/vol: 1000.0 (g/mL) ML Lab File ID: EMN98

Level: (low/med) LOW Date Received: 5/10/91

% Moisture: not dec. 100. dec.____ Date Extracted: 5/14/91

Extraction: (SepF/Cont/Sonc) CONT Date Analyzed: 6/13/91

GPC Cleanup: (Y/N) N pH: 5.0 Dilution Factor: 1.00

CAS NO.	COMPOUND	CONCENTRATION UNITS: (ug/L or ug/Kg) UG/L	Q
108-95-2	Phenol	10.	U
111-44-4	bis(2-Chloroethyl)ether	10.	U
95-57-8	2-Chlorophenol	10.	U
541-73-1	1,3-Dichlorobenzene	10.	U
106-46-7	1,4-Dichlorobenzene	10.	U
100-51-6	Benzyl alcohol	10.	U
95-50-1	1,2-Dichlorobenzene	10.	U
95-48-7	2-Methylphenol	10.	U
108-60-1	bis(2-Chloroisopropyl)ether	10.	U
106-44-5	4-Methylphenol	10.	U
621-64-7	N-Nitroso-di-n-propylamine	10.	U
67-72-1	Hexachloroethane	10.	U
98-95-3	Nitrobenzene	10.	U
78-59-1	Isophorone	10.	U
88-75-5	2-Nitrophenol	10.	U
105-67-9	2,4-Dimethylphenol	10.	U
65-85-0	Benzoic acid	50.	U
111-91-1	bis(2-Chloroethoxy)methane	10.	U
120-83-2	2,4-Dichlorophenol	10.	U
120-82-1	1,2,4-Trichlorobenzene	10.	U
91-20-3	Naphthalene	10.	U
106-47-8	4-Chloroaniline	10.	U
87-68-3	Hexachlorobutadiene	10.	U
59-50-7	4-Chloro-3-methylphenol	10.	U
91-57-6	2-Methylnaphthalene	10.	U
77-47-4	Hexachlorocyclopentadiene	10.	U
88-06-2	2,4,6-Trichlorophenol	10.	U
95-95-4	2,4,5-Trichlorophenol	50.	U
91-58-7	2-Chloronaphthalene	10.	U
88-74-4	2-Nitroaniline	50.	U
131-11-3	Dimethylphthalate	10.	U
208-96-8	Acenaphthylene	10.	U
606-20-2	2,6-Dinitrotoluene	10.	U

1C
SEMIVOLATILE ORGANICS ANALYSIS DATA SHEET

EPA SAMPLE NO. 0743

EMN98

Lab Name: PEI Contract: 68-D9-0037

Lab Code: PEI Case No.: 16377 SAS No.: SDG No.: EHM01

Matrix: (soil/water) WATER Lab Sample ID: X1-05-070-19A

Sample wt/vol: 1000.0 (g/mL) ML Lab File ID: EMN98

Level: (low/med) LOW Date Received: 5/10/91

% Moisture: not dec. 100. dec._____ Date Extracted: 5/14/91

Extraction: (SepF/Cont/Sonc) CONT Date Analyzed: 6/13/91

GPC Cleanup: (Y/N) N pH: 5.0 Dilution Factor: 1.00

CAS NO.	COMPOUND	CONCENTRATION UNITS: (ug/L or ug/Kg) UG/L	Q
99-09-2	3-Nitroaniline	50.	U
83-32-9	Acenaphthene	10.	U
51-28-5	2,4-Dinitrophenol	50.	U
100-02-7	4-Nitrophenol	50.	U
132-64-9	Dibenzofuran	10.	U
121-14-2	2,4-Dinitrotoluene	10.	U
84-66-2	Diethylphthalate	10.	U
7005-72-3	4-Chlorophenyl-phenylether	10.	U
86-73-7	Fluorene	10.	U
100-01-6	4-Nitroaniline	50.	U
534-52-1	4,6-Dinitro-2-methylphenol	50.	U
86-30-6	N-Nitrosodiphenylamine (1)	10.	U
101-55-3	4-Bromophenyl-phenylether	10.	U
118-74-1	Hexachlorobenzene	10.	U
87-86-5	Pentachlorophenol	50.	U
85-01-8	Phenanthrene	10.	U
120-12-7	Anthracene	10.	U
84-74-2	Di-n-butylphthalate	10.	U
206-44-0	Fluoranthene	10.	U
129-00-0	Pyrene	10.	U
85-68-7	Butylbenzylphthalate	10.	U
91-94-1	3,3'-Dichlorobenzidine	20.	U
56-55-3	Benzo(a)anthracene	10.	U
218-01-9	Chrysene	10.	U
117-81-7	bis(2-Ethylhexyl)phthalate	10.	U
117-84-0	Di-n-octylphthalate	10.	U
205-99-2	Benzo(b)fluoranthene	10.	U
207-08-9	Benzo(k)fluoranthene	10.	U
50-32-8	Benzo(a)pyrene	10.	U
193-39-5	Indeno(1,2,3-cd)pyrene	10.	U
53-70-3	Dibenz(a,h)anthracene	10.	U
191-24-2	Benzo(g,h,i)perylene	10.	U

(1) - Cannot be separated from diphenylamine

1F

SEMIVOLATILE ORGANICS ANALYSIS DATA SHEET
TENTATIVELY IDENTIFIED COMPOUNDS

EPA SAMPLE NO. 0744

EMN98

Lab Name: PEI Contract: 68-D9-0037

Lab Code: PEI Case No.: 16377 SAS No.: SDG No.: EHM01

Matrix: (soil/water) WATER Lab Sample ID: X1-05-070-19A

Sample wt/vol: 1000.0 (g/mL) ML Lab File ID: EMN98

Level: (low/med) LOW Date Received: 5/10/91

% Moisture: not dec. 100. dec. _____ Date Extracted: 5/14/91

Extraction: (SepF/Cont/Sonc) CONT Date Analyzed: 6/13/91

GPC Cleanup: (Y/N) N pH: 5.0 Dilution Factor: 1.00

Number TICs found: 4

CONCENTRATION UNITS:
(ug/L or ug/Kg) UG/L

	CAS NUMBER	COMPOUND NAME	RT	EST. CONC.	Q
1.	- -	UNKNOWN	11.63	30.	J
2.	- -	UNKNOWN	19.33	10.	J
3.	- -	UNKNOWN	22.73	9.	J
4.	- -	UNKNOWN	27.15	100.	J
5.					
6.					
7.					
8.					
9.					
10.					
11.					
12.					
13.					
14.					
15.					
16.					
17.					
18.					
19.					
20.					
21.					
22.					
23.					
24.					
25.					
26.					
27.					
28.					
29.					
30.					

1B

SEMIVOLATILE ORGANICS ANALYSIS DATA SHEET

EPA SAMPLE NO.

ES387

0756

Lab Name: PEI Contract: 68-D9-0037

Lab Code: PEI Case No.: 16377 SAS No.: SDG No.: EHM01

Matrix: (soil/water) SOIL Lab Sample ID: X1-05-070-09A

Sample wt/vol: 30.0 (g/mL) G Lab File ID: ES387

Level: (low/med) LOW Date Received: 5/ 9/91

% Moisture: not dec. 32. dec.____ Date Extracted: 5/19/91

Extraction: (SepF/Cont/Sonc) SONC Date Analyzed: 6/12/91

GPC Cleanup: (Y/N) Y pH: 5.0 Dilution Factor: 1.00

CAS NO.	COMPOUND	CONCENTRATION UNITS: (ug/L or ug/Kg) UG/KG	Q
108-95-2	Phenol	970.	U
111-44-4	bis(2-Chloroethyl)ether	970.	U
95-57-8	2-Chlorophenol	970.	U
541-73-1	1,3-Dichlorobenzene	970.	U
106-46-7	1,4-Dichlorobenzene	970.	U
100-51-6	Benzyl alcohol	970.	U
95-50-1	1,2-Dichlorobenzene	970.	U
95-48-7	2-Methylphenol	970.	U
108-60-1	bis(2-Chloroisopropyl)ether	970.	U
106-44-5	4-Methylphenol	970.	U
621-64-7	N-Nitroso-di-n-propylamine	970.	U
67-72-1	Hexachloroethane	970.	U
98-95-3	Nitrobenzene	970.	U
78-59-1	Isophorone	970.	U
88-75-5	2-Nitrophenol	970.	U
105-67-9	2,4-Dimethylphenol	970.	U
65-85-0	Benzoic acid	4700.	U
111-91-1	bis(2-Chloroethoxy)methane	970.	U
120-83-2	2,4-Dichlorophenol	970.	U
120-82-1	1,2,4-Trichlorobenzene	970.	U
91-20-3	Naphthalene	970.	U
106-47-8	4-Chloroaniline	970.	U
87-68-3	Hexachlorobutadiene	970.	U
59-50-7	4-Chloro-3-methylphenol	970.	U
91-57-6	2-Methylnaphthalene	970.	U
77-47-4	Hexachlorocyclopentadiene	970.	U
88-06-2	2,4,6-Trichlorophenol	970.	U
95-95-4	2,4,5-Trichlorophenol	4700.	U
91-58-7	2-Chloronaphthalene	970.	U
88-74-4	2-Nitroaniline	4700.	U
131-11-3	Dimethylphthalate	970.	U
208-96-8	Acenaphthylene	970.	U
606-20-2	2,6-Dinitrotoluene	970.	U

1B
SEMIVOLATILE ORGANICS ANALYSIS DATA SHEET

EPA SAMPLE NO.

0763

ES388

Lab Name: PEI Contract: 68-D9-0037

Lab Code: PEI Case No.: 16377 SAS No.: SDG No.: EHM01

Matrix: (soil/water) SOIL Lab Sample ID: X1-05-070-10A

Sample wt/vol: 30.1 (g/mL) G Lab File ID: ES388

Level: (low/med) LOW Date Received: 5/ 9/91

% Moisture: not dec. 39. dec.____ Date Extracted: 5/19/91

Extraction: (SepF/Cont/Sonc) SONC Date Analyzed: 6/12/91

GPC Cleanup: (Y/N) Y pH: 5.0 Dilution Factor: 1.00

CAS NO.	COMPOUND	CONCENTRATION UNITS: (ug/L or ug/Kg) UG/KG	Q
108-95-2	Phenol	1100.	U
111-44-4	bis(2-Chloroethyl)ether	1100.	U
95-57-8	2-Chlorophenol	1100.	U
541-73-1	1,3-Dichlorobenzene	1100.	U
106-46-7	1,4-Dichlorobenzene	1100.	U
100-51-6	Benzyl alcohol	1100.	U
95-50-1	1,2-Dichlorobenzene	1100.	U
95-48-7	2-Methylphenol	1100.	U
108-60-1	bis(2-Chloroisopropyl)ether	1100.	U
106-44-5	4-Methylphenol	1100.	U
621-64-7	N-Nitroso-di-n-propylamine	1100.	U
67-72-1	Hexachloroethane	1100.	U
98-95-3	Nitrobenzene	1100.	U
78-59-1	Isophorone	1100.	U
88-75-5	2-Nitrophenol	1100.	U
105-67-9	2,4-Dimethylphenol	1100.	U
65-85-0	Benzoic acid	5300.	U
111-91-1	bis(2-Chloroethoxy)methane	1100.	U
120-83-2	2,4-Dichlorophenol	1100.	U
120-82-1	1,2,4-Trichlorobenzene	1100.	U
91-20-3	Naphthalene	1100.	U
106-47-8	4-Chloroaniline	1100.	U
87-68-3	Hexachlorobutadiene	1100.	U
59-50-7	4-Chloro-3-methylphenol	1100.	U
91-57-6	2-Methylnaphthalene	1100.	U
77-47-4	Hexachlorocyclopentadiene	1100.	U
88-06-2	2,4,6-Trichlorophenol	1100.	U
95-95-4	2,4,5-Trichlorophenol	5300.	U
91-58-7	2-Chloronaphthalene	1100.	U
88-74-4	2-Nitroaniline	5300.	U
131-11-3	Dimethylphthalate	1100.	U
208-96-8	Acenaphthylene	1100.	U
606-20-2	2,6-Dinitrotoluene	1100.	U

1C
SEMIVOLATILE ORGANICS ANALYSIS DATA SHEET

EPA SAMPLE NO.

ES388

0769

Lab Name: PEI Contract: 68-D9-0037

Lab Code: PEI Case No.: 16377 SAS No.: SDG No.: EHM01

Matrix: (soil/water) SOIL Lab Sample ID: X1-05-070-10A

Sample wt/vol: 30.1 (g/mL) G Lab File ID: ES388

Level: (low/med) LOW Date Received: 5/ 9/91

% Moisture: not dec. 39. dec.____ Date Extracted: 5/19/91

Extraction: (SepF/Cont/Sonc) SONC Date Analyzed: 6/12/91

GPC Cleanup: (Y/N) Y pH: 5.0 Dilution Factor: 1.00

CAS NO.	COMPOUND	CONCENTRATION UNITS: (ug/L or ug/Kg) UG/KG	Q
99-09-2	3-Nitroaniline	5300.	U
83-32-9	Acenaphthene	1100.	U
51-28-5	2,4-Dinitrophenol	5300.	U
100-02-7	4-Nitrophenol	5300.	U
132-64-9	Dibenzofuran	1100.	U
121-14-2	2,4-Dinitrotoluene	1100.	U
84-66-2	Diethylphthalate	1100.	U
7005-72-3	4-Chlorophenyl-phenylether	1100.	U
86-73-7	Fluorene	1100.	U
100-01-6	4-Nitroaniline	5300.	U
534-52-1	4,6-Dinitro-2-methylphenol	5300.	U
86-30-6	N-Nitrosodiphenylamine (1)	1100.	U
101-55-3	4-Bromophenyl-phenylether	1100.	U
118-74-1	Hexachlorobenzene	1100.	U
87-86-5	Pentachlorophenol	5300.	U
85-01-8	Phenanthrene	1100.	U
120-12-7	Anthracene	1100.	U
84-74-2	Di-n-butylphthalate	1100.	U
206-44-0	Fluoranthene	1100.	U
129-00-0	Pyrene	1100.	U
85-68-7	Butylbenzylphthalate	1100.	U
91-94-1	3,3'-Dichlorobenzidine	2200.	U
56-55-3	Benzo(a)anthracene	1100.	U
218-01-9	Chrysene	1100.	U
117-81-7	bis(2-Ethylhexyl)phthalate	1100.	U
117-84-0	Di-n-octylphthalate	1100.	U
205-99-2	Benzo(b)fluoranthene	1100.	U
207-08-9	Benzo(k)fluoranthene	1100.	U
50-32-8	Benzo(a)pyrene	1100.	U
193-39-5	Indeno(1,2,3-cd)pyrene	1100.	U
53-70-3	Dibenz(a,h)anthracene	1100.	U
191-24-2	Benzo(g,h,i)perylene	1100.	U

(1) - Cannot be separated from diphenylamine

1F

SEMIVOLATILE ORGANICS ANALYSIS DATA SHEET
TENTATIVELY IDENTIFIED COMPOUNDS

EPA SAMPLE NO. 077

ES388

Lab Name: PEI Contract: 68-D9-0037

Lab Code: PEI Case No.: 16377 SAS No.: SDG No.: EHM01

Matrix: (soil/water) SOIL Lab Sample ID: X1-05-070-10A

Sample wt/vol: 30.1 (g/mL) G Lab File ID: ES388

Level: (low/med) LOW Date Received: 5/ 9/91

% Moisture: not dec. 39. dec._____ Date Extracted: 5/19/91

Extraction: (SepF/Cont/Sonc) SONC Date Analyzed: 6/12/91

GPC Cleanup: (Y/N) Y pH: 5.0 Dilution Factor: 1.00

Number TICs found: 2

CONCENTRATION UNITS:
(ug/L or ug/Kg) UG/KG

CAS NUMBER	COMPOUND NAME	RT	EST. CONC.	Q
1. - -	UNKNOWN	27.13	700.	J
2. - -	UNKNOWN	31.15	3000.	J
3.				
4.				
5.				
6.				
7.				
8.				
9.				
10.				
11.				
12.				
13.				
14.				
15.				
16.				
17.				
18.				
19.				
20.				
21.				
22.				
23.				
24.				
25.				
26.				
27.				
28.				
29.				
30.				

1B
SEMIVOLATILE ORGANICS ANALYSIS DATA SHEET

EPA SAMPLE NO. 0780

ES389

Lab Name: PEI Contract: 68-D9-0037

Lab Code: PEI Case No.: 16377 SAS No.: SDG No.: EHM01

Matrix: (soil/water) SOIL Lab Sample ID: X1-05-070-11A

Sample wt/vol: 19.3 (g/mL) G Lab File ID: ES389

Level: (low/med) LOW Date Received: 5/ 9/91

% Moisture: not dec. 19. dec.____ Date Extracted: 5/19/91

Extraction: (SepF/Cont/Sonc) SONC Date Analyzed: 6/13/91

GPC Cleanup: (Y/N) Y pH: 5.0 Dilution Factor: 1.00

CAS NO.	COMPOUND	CONCENTRATION UNITS: (ug/L or ug/Kg) UG/KG	Q
108-95-2	Phenol	520.	U
111-44-4	bis(2-Chloroethyl)ether	520.	U
95-57-8	2-Chlorophenol	520.	U
541-73-1	1,3-Dichlorobenzene	520.	U
106-46-7	1,4-Dichlorobenzene	520.	U
100-51-6	Benzyl alcohol	520.	U
95-50-1	1,2-Dichlorobenzene	520.	U
95-48-7	2-Methylphenol	520.	U
108-60-1	bis(2-Chloroisopropyl)ether	520.	U
106-44-5	4-Methylphenol	520.	U
621-64-7	N-Nitroso-di-n-propylamine	520.	U
67-72-1	Hexachloroethane	520.	U
98-95-3	Nitrobenzene	520.	U
78-59-1	Isophorone	520.	U
88-75-5	2-Nitrophenol	520.	U
105-67-9	2,4-Dimethylphenol	520.	U
65-85-0	Benzoic acid	2600.	U
111-91-1	bis(2-Chloroethoxy)methane	520.	U
120-83-2	2,4-Dichlorophenol	520.	U
120-82-1	1,2,4-Trichlorobenzene	520.	U
91-20-3	Naphthalene	520.	U
106-47-8	4-Chloroaniline	520.	U
87-68-3	Hexachlorobutadiene	520.	U
59-50-7	4-Chloro-3-methylphenol	520.	U
91-57-6	2-Methylnaphthalene	520.	U
77-47-4	Hexachlorocyclopentadiene	520.	U
88-06-2	2,4,6-Trichlorophenol	520.	U
95-95-4	2,4,5-Trichlorophenol	2600.	U
91-58-7	2-Chloronaphthalene	520.	U
88-74-4	2-Nitroaniline	2600.	U
131-11-3	Dimethylphthalate	520.	U
208-96-8	Acenaphthylene	520.	U
606-20-2	2,6-Dinitrotoluene	520.	U

1C

SEMIVOLATILE ORGANICS ANALYSIS DATA SHEET

EPA SAMPLE NO.

ES389 0781

Lab Name: PEI Contract: 68-D9-0037

Lab Code: PEI Case No.: 16377 SAS No.: SDG No.: EHM01

Matrix: (soil/water) SOIL Lab Sample ID: X1-05-070-11A

Sample wt/vol: 19.3 (g/mL) G Lab File ID: ES389

Level: (low/med) LOW Date Received: 5/ 9/91

% Moisture: not dec. 19. dec._____ Date Extracted: 5/19/91

Extraction: (SepF/Cont/Sonc) SONC Date Analyzed: 6/13/91

GPC Cleanup: (Y/N) Y pH: 5.0 Dilution Factor: 1.00

CAS NO.	COMPOUND	CONCENTRATION UNITS: (ug/L or ug/Kg) UG/KG	Q
99-09-2	3-Nitroaniline	2600.	U
83-32-9	Acenaphthene	520.	U
51-28-5	2,4-Dinitrophenol	2600.	U
100-02-7	4-Nitrophenol	2600.	U
132-64-9	Dibenzofuran	520.	U
121-14-2	2,4-Dinitrotoluene	520.	U
84-66-2	Diethylphthalate	520.	U
7005-72-3	4-Chlorophenyl-phenylether	520.	U
86-73-7	Fluorene	520.	U
100-01-6	4-Nitroaniline	2600.	U
534-52-1	4,6-Dinitro-2-methylphenol	2600.	U
86-30-6	N-Nitrosodiphenylamine (1)	520.	U
101-55-3	4-Bromophenyl-phenylether	520.	U
118-74-1	Hexachlorobenzene	520.	U
87-86-5	Pentachlorophenol	2600.	U
85-01-8	Phenanthrene	520.	U
120-12-7	Anthracene	520.	U
84-74-2	Di-n-butylphthalate	520.	U
206-44-0	Fluoranthene	520.	U
129-00-0	Pyrene	520.	U
85-68-7	Butylbenzylphthalate	520.	U
91-94-1	3,3'-Dichlorobenzidine	1000.	U
56-55-3	Benzo(a)anthracene	520.	U
218-01-9	Chrysene	520.	U
117-81-7	bis(2-Ethylhexyl)phthalate	520.	U
117-84-0	Di-n-octylphthalate	520.	U
205-99-2	Benzo(b)fluoranthene	520.	U
207-08-9	Benzo(k)fluoranthene	520.	U
50-32-8	Benzo(a)pyrene	520.	U
193-39-5	Indeno(1,2,3-cd)pyrene	520.	U
53-70-3	Dibenz(a,h)anthracene	520.	U
191-24-2	Benzo(g,h,i)perylene	520.	U

(1) - Cannot be separated from diphenylamine

1F

SEMIVOLATILE ORGANICS ANALYSIS DATA SHEET
TENTATIVELY IDENTIFIED COMPOUNDS

EPA SAMPLE NO.

ES389

0782

Lab Name: PEI Contract: 68-D9-0037

Lab Code: PEI Case No.: 16377 SAS No.: SDG No.: EHM01

Matrix: (soil/water) SOIL Lab Sample ID: X1-05-070-11A

Sample wt/vol: 19.3 (g/mL) G Lab File ID: ES389

Level: (low/med) LOW Date Received: 5/ 9/91

% Moisture: not dec. 19. dec._____ Date Extracted: 5/19/91

Extraction: (SepF/Cont/Sonc) SONC Date Analyzed: 6/13/91

GPC Cleanup: (Y/N) Y pH: 5.0 Dilution Factor: 1.00

Number TICs found: 3

CONCENTRATION UNITS:
(ug/L or ug/Kg) UG/KG

CAS NUMBER	COMPOUND NAME	RT	EST. CONC.	Q
1. - -	UNKNOWN	31.33	1000.	J
2. - -	UNKNOWN	32.02	1000.	J
3. - -	UNKNOWN	33.20	500.	J
4.				
5.				
6.				
7.				
8.				
9.				
10.				
11.				
12.				
13.				
14.				
15.				
16.				
17.				
18.				
19.				
20.				
21.				
22.				
23.				
24.				
25.				
26.				
27.				
28.				
29.				
30.				

1B

SEMIVOLATILE ORGANICS ANALYSIS DATA SHEET

EPA SAMPLE NO. 0794

ES390

Lab Name: PEI Contract: 68-D9-0037

Lab Code: PEI Case No.: 16377 SAS No.: SDG No.: EHM01

Matrix: (soil/water) SOIL Lab Sample ID: X1-05-070-12A

Sample wt/vol: 30.0 (g/mL) G Lab File ID: ES390

Level: (low/med) LOW Date Received: 5/ 9/91

% Moisture: not dec. 34. dec.____ Date Extracted: 5/22/91

Extraction: (SepF/Cont/Sonc) SONC Date Analyzed: 6/12/91

GPC Cleanup: (Y/N) Y pH: 5.0 Dilution Factor: 1.00

CAS NO.	COMPOUND	CONCENTRATION UNITS: (ug/L or ug/Kg) UG/KG	Q
108-95-2	Phenol	1000.	U
111-44-4	bis(2-Chloroethyl)ether	1000.	U
95-57-8	2-Chlorophenol	1000.	U
541-73-1	1,3-Dichlorobenzene	1000.	U
106-46-7	1,4-Dichlorobenzene	1000.	U
100-51-6	Benzyl alcohol	1000.	U
95-50-1	1,2-Dichlorobenzene	1000.	U
95-48-7	2-Methylphenol	1000.	U
108-60-1	bis(2-Chloroisopropyl)ether	1000.	U
106-44-5	4-Methylphenol	1000.	U
621-64-7	N-Nitroso-di-n-propylamine	1000.	U
67-72-1	Hexachloroethane	1000.	U
98-95-3	Nitrobenzene	1000.	U
78-59-1	Isophorone	1000.	U
88-75-5	2-Nitrophenol	1000.	U
105-67-9	2,4-Dimethylphenol	1000.	U
65-85-0	Benzoic acid	4900.	U
111-91-1	bis(2-Chloroethoxy)methane	1000.	U
120-83-2	2,4-Dichlorophenol	1000.	U
120-82-1	1,2,4-Trichlorobenzene	1000.	U
91-20-3	Naphthalene	1000.	U
106-47-8	4-Chloroaniline	1000.	U
87-68-3	Hexachlorobutadiene	1000.	U
59-50-7	4-Chloro-3-methylphenol	1000.	U
91-57-6	2-Methylnaphthalene	1000.	U
77-47-4	Hexachlorocyclopentadiene	1000.	U
88-06-2	2,4,6-Trichlorophenol	1000.	U
95-95-4	2,4,5-Trichlorophenol	4900.	U
91-58-7	2-Chloronaphthalene	1000.	U
88-74-4	2-Nitroaniline	4900.	U
131-11-3	Dimethylphthalate	1000.	U
208-96-8	Acenaphthylene	1000.	U
606-20-2	2,6-Dinitrotoluene	1000.	U

1C

SEMIVOLATILE ORGANICS ANALYSIS DATA SHEET

EPA SAMPLE NO. 0795

ES390

Lab Name: PEI Contract: 68-D9-0037

Lab Code: PEI Case No.: 16377 SAS No.: SDG No.: EHM01

Matrix: (soil/water) SOIL Lab Sample ID: X1-05-070-12A

Sample wt/vol: 30.0 (g/mL) G Lab File ID: ES390

Level: (low/med) LOW Date Received: 5/ 9/91

% Moisture: not dec. 34. dec.____ Date Extracted: 5/22/91

Extraction: (SepF/Cont/Sonc) SONC Date Analyzed: 6/12/91

GPC Cleanup: (Y/N) Y pH: 5.0 Dilution Factor: 1.00

CAS NO.	COMPOUND	CONCENTRATION UNITS: (ug/L or ug/Kg) UG/KG	Q
99-09-2	3-Nitroaniline	4900.	U
83-32-9	Acenaphthene	1000.	U
51-28-5	2,4-Dinitrophenol	4900.	U
100-02-7	4-Nitrophenol	4900.	U
132-64-9	Dibenzofuran	1000.	U
121-14-2	2,4-Dinitrotoluene	1000.	U
84-66-2	Diethylphthalate	1000.	U
7005-72-3	4-Chlorophenyl-phenylether	1000.	U
86-73-7	Fluorene	1000.	U
100-01-6	4-Nitroaniline	4900.	U
534-52-1	4,6-Dinitro-2-methylphenol	4900.	U
86-30-6	N-Nitrosodiphenylamine (1)	1000.	U
101-55-3	4-Bromophenyl-phenylether	1000.	U
118-74-1	Hexachlorobenzene	1000.	U
87-86-5	Pentachlorophenol	4900.	U
85-01-8	Phenanthrene	1000.	U
120-12-7	Anthracene	1000.	U
84-74-2	Di-n-butylphthalate	1000.	U
206-44-0	Fluoranthene	1000.	U
129-00-0	Pyrene	1000.	U
85-68-7	Butylbenzylphthalate	1000.	U
91-94-1	3,3'-Dichlorobenzidine	2000.	U
56-55-3	Benzo(a)anthracene	1000.	U
218-01-9	Chrysene	1000.	U
117-81-7	bis(2-Ethylhexyl)phthalate	1000.	U
117-84-0	Di-n-octylphthalate	1000.	U
205-99-2	Benzo(b)fluoranthene	1000.	U
207-08-9	Benzo(k)fluoranthene	1000.	U
50-32-8	Benzo(a)pyrene	1000.	U
193-39-5	Indeno(1,2,3-cd)pyrene	1000.	U
53-70-3	Dibenz(a,h)anthracene	1000.	U
191-24-2	Benzo(g,h,i)perylene	1000.	U

(1) - Cannot be separated from diphenylamine

1F

SEMIVOLATILE ORGANICS ANALYSIS DATA SHEET
TENTATIVELY IDENTIFIED COMPOUNDS

EPA SAMPLE NO. 0796

ES390

Lab Name: PEI Contract: 68-D9-0037

Lab Code: PEI Case No.: 16377 SAS No.: SDG No.: EHM01

Matrix: (soil/water) SOIL Lab Sample ID: X1-05-070-12A

Sample wt/vol: 30.0 (g/mL) G Lab File ID: ES390

Level: (low/med) LOW Date Received: 5/ 9/91

% Moisture: not dec. 34. dec.____ Date Extracted: 5/22/91

Extraction: (SepF/Cont/Sonc) SONC Date Analyzed: 6/12/91

GPC Cleanup: (Y/N) Y pH: 5.0 Dilution Factor: 1.00

Number TICs found: 1

CONCENTRATION UNITS:
(ug/L or ug/Kg) UG/KG

	CAS NUMBER	COMPOUND NAME	RT	EST. CONC.	Q
1.	- -	UNKNOWN	31.13	4000.	~~J~~ U
2.					
3.					
4.					
5.					
6.					
7.					
8.					
9.					
10.					
11.					
12.					
13.					
14.					
15.					
16.					
17.					
18.					
19.					
20.					
21.					
22.					
23.					
24.					
25.					
26.					
27.					
28.					
29.					
30.					

KM 7/5/91

1B

SEMIVOLATILE ORGANICS ANALYSIS DATA SHEET

EPA SAMPLE NO. 0805

ES391

Lab Name: PEI Contract: 68-D9-0037

Lab Code: PEI Case No.: 16377 SAS No.: SDG No.: EHM01

Matrix: (soil/water) SOIL Lab Sample ID: X1-05-070-13A

Sample wt/vol: 30.0 (g/mL) G Lab File ID: ES391

Level: (low/med) LOW Date Received: 5/ 9/91

% Moisture: not dec. 49. dec.____ Date Extracted: 5/19/91

Extraction: (SepF/Cont/Sonc) SONC Date Analyzed: 6/13/91

GPC Cleanup: (Y/N) Y pH: 5.0 Dilution Factor: 1.00

CAS NO.	COMPOUND	CONCENTRATION UNITS: (ug/L or ug/Kg) UG/KG	Q
108-95-2	Phenol	1300.	U
111-44-4	bis(2-Chloroethyl)ether	1300.	U
95-57-8	2-Chlorophenol	1300.	U
541-73-1	1,3-Dichlorobenzene	1300.	U
106-46-7	1,4-Dichlorobenzene	1300.	U
100-51-6	Benzyl alcohol	1300.	U
95-50-1	1,2-Dichlorobenzene	1300.	U
95-48-7	2-Methylphenol	1300.	U
108-60-1	bis(2-Chloroisopropyl)ether	1300.	U
106-44-5	4-Methylphenol	1300.	U
621-64-7	N-Nitroso-di-n-propylamine	1300.	U
67-72-1	Hexachloroethane	1300.	U
98-95-3	Nitrobenzene	1300.	U
78-59-1	Isophorone	1300.	U
88-75-5	2-Nitrophenol	1300.	U
105-67-9	2,4-Dimethylphenol	1300.	U
65-85-0	Benzoic acid	6200.	U
111-91-1	bis(2-Chloroethoxy)methane	1300.	U
120-83-2	2,4-Dichlorophenol	1300.	U
120-82-1	1,2,4-Trichlorobenzene	1300.	U
91-20-3	Naphthalene	1300.	U
106-47-8	4-Chloroaniline	1300.	U
87-68-3	Hexachlorobutadiene	1300.	U
59-50-7	4-Chloro-3-methylphenol	1300.	U
91-57-6	2-Methylnaphthalene	1300.	U
77-47-4	Hexachlorocyclopentadiene	1300.	U
88-06-2	2,4,6-Trichlorophenol	1300.	U
95-95-4	2,4,5-Trichlorophenol	6200.	U
91-58-7	2-Chloronaphthalene	1300.	U
88-74-4	2-Nitroaniline	6200.	U
131-11-3	Dimethylphthalate	1300.	U
208-96-8	Acenaphthylene	1300.	U
606-20-2	2,6-Dinitrotoluene	1300.	U

1C
SEMIVOLATILE ORGANICS ANALYSIS DATA SHEET

EPA SAMPLE NO. 0806

ES391

Lab Name: PEI Contract: 68-D9-0037

Lab Code: PEI Case No.: 16377 SAS No.: SDG No.: EHM01

Matrix: (soil/water) SOIL Lab Sample ID: X1-05-070-13A

Sample wt/vol: 30.0 (g/mL) G Lab File ID: ES391

Level: (low/med) LOW Date Received: 5/ 9/91

% Moisture: not dec. 49. dec.____ Date Extracted: 5/19/91

Extraction: (SepF/Cont/Sonc) SONC Date Analyzed: 6/13/91

GPC Cleanup: (Y/N) Y pH: 5.0 Dilution Factor: 1.00

CAS NO.	COMPOUND	CONCENTRATION UNITS: (ug/L or ug/Kg) UG/KG	Q
99-09-2	3-Nitroaniline	6200.	U
83-32-9	Acenaphthene	1300.	U
51-28-5	2,4-Dinitrophenol	6200.	U
100-02-7	4-Nitrophenol	6200.	U
132-64-9	Dibenzofuran	1300.	U
121-14-2	2,4-Dinitrotoluene	1300.	U
84-66-2	Diethylphthalate	1300.	U
7005-72-3	4-Chlorophenyl-phenylether	1300.	U
86-73-7	Fluorene	1300.	U
100-01-6	4-Nitroaniline	6200.	U
534-52-1	4,6-Dinitro-2-methylphenol	6200.	U
86-30-6	N-Nitrosodiphenylamine (1)	1300.	U
101-55-3	4-Bromophenyl-phenylether	1300.	U
118-74-1	Hexachlorobenzene	1300.	U
87-86-5	Pentachlorophenol	6200.	U
85-01-8	Phenanthrene	1300.	U
120-12-7	Anthracene	1300.	U
84-74-2	Di-n-butylphthalate	1300.	U
206-44-0	Fluoranthene	1300.	U
129-00-0	Pyrene	1300.	U
85-68-7	Butylbenzylphthalate	1300.	U
91-94-1	3,3'-Dichlorobenzidine	2600.	U
56-55-3	Benzo(a)anthracene	1300.	U
218-01-9	Chrysene	1300.	U
117-81-7	bis(2-Ethylhexyl)phthalate	1300.	U
117-84-0	Di-n-octylphthalate	1300.	U
205-99-2	Benzo(b)fluoranthene	1300.	U
207-08-9	Benzo(k)fluoranthene	1300.	U
50-32-8	Benzo(a)pyrene	1300.	U
193-39-5	Indeno(1,2,3-cd)pyrene	1300.	U
53-70-3	Dibenz(a,h)anthracene	1300.	U
191-24-2	Benzo(g,h,i)perylene	1300.	U

(1) - Cannot be separated from diphenylamine

1F

SEMIVOLATILE ORGANICS ANALYSIS DATA SHEET
TENTATIVELY IDENTIFIED COMPOUNDS

EPA SAMPLE NO. 0807

ES391

Lab Name: PEI Contract: 68-D9-0037

Lab Code: PEI Case No.: 16377 SAS No.: SDG No.: EHM01

Matrix: (soil/water) SOIL Lab Sample ID: X1-05-070-13A

Sample wt/vol: 30.0 (g/mL) G Lab File ID: ES391

Level: (low/med) LOW Date Received: 5/ 9/91

% Moisture: not dec. 49. dec._____ Date Extracted: 5/19/91

Extraction: (SepF/Cont/Sonc) SONC Date Analyzed: 6/13/91

GPC Cleanup: (Y/N) Y pH: 5.0 Dilution Factor: 1.00

Number TICs found: 0

CONCENTRATION UNITS:
(ug/L or ug/Kg) UG/KG

CAS NUMBER	COMPOUND NAME	RT	EST. CONC.	Q
1.				
2.				
3.				
4.				
5.				
6.				
7.				
8.				
9.				
10.				
11.				
12.				
13.				
14.				
15.				
16.				
17.				
18.				
19.				
20.				
21.				
22.				
23.				
24.				
25.				
26.				
27.				
28.				
29.				
30.				

1D
PESTICIDE ORGANICS ANALYSIS DATA SHEET

EPA SAMPLE NO.
2008
EHM01

Lab Name: PEI Contract: 68-D9-0037

Lab Code: PEI Case No.: 16377 SAS No.: SDG No.: EHM01

Matrix: (soil/water) WATER Lab Sample ID: X1-05-070-01A

Sample wt/vol: 1000.0 (g/mL) ML Lab File ID: YWP001

Level: (low/med) LOW Date Received: 5/ 9/91

% Moisture: not dec. 100. dec._____ Date Extracted: 5/14/91

Extraction: (SepF/Cont/Sonc) CONT Date Analyzed: 5/28/91

GPC Cleanup: (Y/N) N pH: 7.0 Dilution Factor: 1.00

CAS NO.	COMPOUND	CONCENTRATION UNITS: (ug/L or ug/Kg) UG/L	Q
319-84-6	alpha-BHC	.050	U
319-85-7	beta-BHC	.050	U
319-86-8	delta-BHC	.050	U
58-89-9	gamma-BHC	.050	U
76-44-8	Heptachlor	.050	U
309-00-2	Aldrin	.050	U
1024-57-3	Heptachlor epoxide	.050	U
959-98-8	Endosulfan I	.050	U
60-57-1	Dieldrin	.10	U
72-55-9	4,4'-DDE	.10	U
72-20-8	Endrin	.10	U
33213-65-9	Endosulfan II	.10	U
72-54-8	4,4'-DDD	.10	U
1031-07-8	Endosulfan sulfate	.10	U
50-29-3	4,4'-DDT	.10	U
72-43-5	Methoxychlor	.50	U
53494-70-5	Endrin ketone	.10	U
5103-71-9	alpha-Chlordane	.50	U
5103-74-2	gamma-Chlordane	.50	U
8001-35-2	Toxaphene	1.0	U
12674-11-2	Aroclor-1016	.50	U
11104-28-2	Aroclor-1221	.50	U
11141-16-5	Aroclor-1232	.50	U
53469-21-9	Aroclor-1242	.50	U
12672-29-6	Aroclor-1248	.50	U
11097-69-1	Aroclor-1254	1.0	U
11096-82-5	Aroclor-1260	1.0	U

2017

EPA SAMPLE NO.

EHM02

1D

PESTICIDE ORGANICS ANALYSIS DATA SHEET

Lab Name: PEI Contract: 68-D9-0037

Lab Code: PEI Case No.: 16377 SAS No.: SDG No.: EHM01

Matrix: (soil/water) WATER Lab Sample ID: X1-05-070-02A

Sample wt/vol: 1000.0 (g/mL) ML Lab File ID: YWP002

Level: (low/med) LOW Date Received: 5/ 9/91

% Moisture: not dec. 100. dec._____ Date Extracted: 5/14/91

Extraction: (SepF/Cont/Sonc) CONT Date Analyzed: 5/28/91

GPC Cleanup: (Y/N) N pH: 6.0 Dilution Factor: 1.00

CAS NO.	COMPOUND	CONCENTRATION UNITS: (ug/L or ug/Kg) UG/L	Q
319-84-6	alpha-BHC	.050	U
319-85-7	beta-BHC	.050	U
319-86-8	delta-BHC	.050	U
58-89-9	gamma-BHC	.050	U
76-44-8	Heptachlor	.050	U
309-00-2	Aldrin	.050	U
1024-57-3	Heptachlor epoxide	.050	U
959-98-8	Endosulfan I	.050	U
60-57-1	Dieldrin	.10	U
72-55-9	4,4'-DDE	.10	U
72-20-8	Endrin	.10	U
33213-65-9	Endosulfan II	.10	U
72-54-8	4,4'-DDD	.10	U
1031-07-8	Endosulfan sulfate	.10	U
50-29-3	4,4'-DDT	.10	U
72-43-5	Methoxychlor	.50	U
53494-70-5	Endrin ketone	.10	U
5103-71-9	alpha-Chlordane	.50	U
5103-74-2	gamma-Chlordane	.50	U
8001-35-2	Toxaphene	1.0	U
12674-11-2	Aroclor-1016	.50	U
11104-28-2	Aroclor-1221	.50	U
11141-16-5	Aroclor-1232	.50	U
53469-21-9	Aroclor-1242	.50	U
12672-29-6	Aroclor-1248	.50	U
11097-69-1	Aroclor-1254	1.0	U
11096-82-5	Aroclor-1260	1.0	U

2022

1D
PESTICIDE ORGANICS ANALYSIS DATA SHEET

EPA SAMPLE NO.

EHM03

Lab Name: PEI Contract: 68-D9-0037

Lab Code: PEI Case No.: 16377 SAS No.: SDG No.: EHM01

Matrix: (soil/water) WATER Lab Sample ID: X1-05-070-03A

Sample wt/vol: 1000.0 (g/mL) ML Lab File ID: YWP2L003

Level: (low/med) LOW Date Received: 5/ 9/91

% Moisture: not dec. 100. dec._____ Date Extracted: 5/14/91

Extraction: (SepF/Cont/Sonc) CONT Date Analyzed: 5/30/91

GPC Cleanup: (Y/N) N pH: 7.0 Dilution Factor: 10.00

CAS NO.	COMPOUND	CONCENTRATION UNITS: (ug/L or ug/Kg) UG/L	Q
319-84-6	alpha-BHC	.50	U
319-85-7	beta-BHC	.50	U
319-86-8	delta-BHC	.50	U
58-89-9	gamma-BHC	.50	U
76-44-8	Heptachlor	.50	U
309-00-2	Aldrin	.50	U
1024-57-3	Heptachlor epoxide	.50	U
959-98-8	Endosulfan I	.50	U
60-57-1	Dieldrin	1.0	U
72-55-9	4,4'-DDE	1.0	U
72-20-8	Endrin	1.0	U
33213-65-9	Endosulfan II	1.0	U
72-54-8	4,4'-DDD	1.0	U
1031-07-8	Endosulfan sulfate	1.0	U
50-29-3	4,4'-DDT	1.0	U
72-43-5	Methoxychlor	5.0	U
53494-70-5	Endrin ketone	1.0	U
5103-71-9	alpha-Chlordane	5.0	U
5103-74-2	gamma-Chlordane	5.0	U
8001-35-2	Toxaphene	10.	U
12674-11-2	Aroclor-1016	5.0	U
11104-28-2	Aroclor-1221	5.0	U
11141-16-5	Aroclor-1232	5.0	U
53469-21-9	Aroclor-1242	36.	
12672-29-6	Aroclor-1248	5.0	U
11097-69-1	Aroclor-1254	10.	U
11096-82-5	Aroclor-1260	10.	U

1D
PESTICIDE ORGANICS ANALYSIS DATA SHEET

2032

EXTRACTION SAMPLE NO.

EHM04

Lab Name: PEI Contract: 68-D9-0037

Lab Code: PEI Case No.: 16377 SAS No.: SDG No.: EHM01

Matrix: (soil/water) WATER Lab Sample ID: X1-05-070-04A

Sample wt/vol: 1000.0 (g/mL) ML Lab File ID: YWP004

Level: (low/med) LOW Date Received: 5/ 9/91

% Moisture: not dec. 100. dec._____ Date Extracted: 5/14/91

Extraction: (SepF/Cont/Sonc) CONT Date Analyzed: 5/28/91

GPC Cleanup: (Y/N) N pH: 5.0 Dilution Factor: 1.00

CAS NO.	COMPOUND	CONCENTRATION UNITS: (ug/L or ug/Kg) UG/L	Q
319-84-6	alpha-BHC	.050	U
319-85-7	beta-BHC	.050	U
319-86-8	delta-BHC	.050	U
58-89-9	gamma-BHC	.050	U
76-44-8	Heptachlor	.050	U
309-00-2	Aldrin	.050	U
1024-57-3	Heptachlor epoxide	.050	U
959-98-8	Endosulfan I	.050	U
60-57-1	Dieldrin	.10	U
72-55-9	4,4'-DDE	.10	U
72-20-8	Endrin	.10	U
33213-65-9	Endosulfan II	.10	U
72-54-8	4,4'-DDD	.10	U
1031-07-8	Endosulfan sulfate	.10	U
50-29-3	4,4'-DDT	.10	U
72-43-5	Methoxychlor	.50	U
53494-70-5	Endrin ketone	.10	U
5103-71-9	alpha-Chlordane	.50	U
5103-74-2	gamma-Chlordane	.50	U
8001-35-2	Toxaphene	1.0	U
12674-11-2	Aroclor-1016	.50	U
11104-28-2	Aroclor-1221	.50	U
11141-16-5	Aroclor-1232	.50	U
53469-21-9	Aroclor-1242	.50	U
12672-29-6	Aroclor-1248	.50	U
11097-69-1	Aroclor-1254	1.0	U
11096-82-5	Aroclor-1260	1.0	U

1D
PESTICIDE ORGANICS ANALYSIS DATA SHEET

EPA SAMPLE NO.
2037
EHW88

Lab Name: PEI Contract: 68-D9-0037

Lab Code: PEI Case No.: 16377 SAS No.: SDG No.: EHM01

Matrix: (soil/water) SOIL Lab Sample ID: X1-05-070-05A

Sample wt/vol: 30.1 (g/mL) G Lab File ID: YWP0088

Level: (low/med) LOW Date Received: 5/ 9/91

% Moisture: not dec. 57. dec._____ Date Extracted: 5/19/91

Extraction: (SepF/Cont/Sonc) SONC Date Analyzed: 5/31/91

GPC Cleanup: (Y/N) Y pH: 5.0 Dilution Factor: 1.00

CAS NO.	COMPOUND	CONCENTRATION UNITS: (ug/L or ug/Kg) UG/KG	Q
319-84-6	alpha-BHC	37.	U
319-85-7	beta-BHC	37.	U
319-86-8	delta-BHC	37.	U
58-89-9	gamma-BHC	37.	U
76-44-8	Heptachlor	37.	U
309-00-2	Aldrin	37.	U
1024-57-3	Heptachlor epoxide	37.	U
959-98-8	Endosulfan I	37.	U
60-57-1	Dieldrin	74.	U
72-55-9	4,4'-DDE	74.	U
72-20-8	Endrin	74.	U
33213-65-9	Endosulfan II	74.	U
72-54-8	4,4'-DDD	74.	U
1031-07-8	Endosulfan sulfate	74.	U
50-29-3	4,4'-DDT	74.	U
72-43-5	Methoxychlor	370.	U
53494-70-5	Endrin ketone	74.	U
5103-71-9	alpha-Chlordane	370.	U
5103-74-2	gamma-Chlordane	370.	U
8001-35-2	Toxaphene	740.	U
12674-11-2	Aroclor-1016	370.	U
11104-28-2	Aroclor-1221	370.	U
11141-16-5	Aroclor-1232	370.	U
53469-21-9	Aroclor-1242	370.	U
12672-29-6	Aroclor-1248	370.	U
11097-69-1	Aroclor-1254	740.	U
11096-82-5	Aroclor-1260	740.	U

1D
PESTICIDE ORGANICS ANALYSIS DATA SHEET

EPA SAMPLE NO.

EHW89

Lab Name: PEI Contract: 68-D9-0037

Lab Code: PEI Case No.: 16377 SAS No.: SDG No.: EHM01

Matrix: (soil/water) SOIL Lab Sample ID: X1-05-070-06A

Sample wt/vol: 30.1 (g/mL) G Lab File ID: YWPL089

Level: (low/med) LOW Date Received: 5/ 9/91

% Moisture: not dec. 45. dec._____ Date Extracted: 5/19/91

Extraction: (SepF/Cont/Sonc) SONC Date Analyzed: 5/31/91

GPC Cleanup: (Y/N) Y pH: 5.0 Dilution Factor: 10.00

CAS NO.	COMPOUND	CONCENTRATION UNITS: (ug/L or ug/Kg) UG/KG	Q
319-84-6	alpha-BHC	290.	U
319-85-7	beta-BHC	290.	U
319-86-8	delta-BHC	290.	U
58-89-9	gamma-BHC	290.	U
76-44-8	Heptachlor	290.	U
309-00-2	Aldrin	290.	U
1024-57-3	Heptachlor epoxide	290.	U
959-98-8	Endosulfan I	290.	U
60-57-1	Dieldrin	580.	U
72-55-9	4,4'-DDE	580.	U
72-20-8	Endrin	580.	U
33213-65-9	Endosulfan II	580.	U
72-54-8	4,4'-DDD	580.	U
1031-07-8	Endosulfan sulfate	580.	U
50-29-3	4,4'-DDT	580.	U
72-43-5	Methoxychlor	2900.	U
53494-70-5	Endrin ketone	580.	U
5103-71-9	alpha-Chlordane	2900.	U
5103-74-2	gamma-Chlordane	2900.	U
8001-35-2	Toxaphene	5800.	U
12674-11-2	Aroclor-1016	2900.	U
11104-28-2	Aroclor-1221	2900.	U
11141-16-5	Aroclor-1232	2900.	U
53469-21-9	Aroclor-1242	2900.	U
12672-29-6	Aroclor-1248	2900.	U
11097-69-1	Aroclor-1254	5800.	U
11096-82-5	Aroclor-1260	5800.	U

2053

EPA SAMPLE NO.

EHW90

1D
PESTICIDE ORGANICS ANALYSIS DATA SHEET

Lab Name: PEI Contract: 68-D9-0037

Lab Code: PEI Case No.: 16377 SAS No.: SDG No.: EHM01

Matrix: (soil/water) SOIL Lab Sample ID: X1-05-070-07A

Sample wt/vol: 30.0 (g/mL) G Lab File ID: YWP0090

Level: (low/med) LOW Date Received: 5/ 9/91

% Moisture: not dec. 21. dec._____ Date Extracted: 5/19/91

Extraction: (SepF/Cont/Sonc) SONC Date Analyzed: 5/31/91

GPC Cleanup: (Y/N) Y pH: 5.0 Dilution Factor: 1.00

CAS NO.	COMPOUND	CONCENTRATION UNITS: (ug/L or ug/Kg) UG/KG	Q
319-84-6	alpha-BHC	20.	U
319-85-7	beta-BHC	20.	U
319-86-8	delta-BHC	20.	U
58-89-9	gamma-BHC	20.	U
76-44-8	Heptachlor	20.	U
309-00-2	Aldrin	20.	U
1024-57-3	Heptachlor epoxide	20.	U
959-98-8	Endosulfan I	20.	U
60-57-1	Dieldrin	40.	U
72-55-9	4,4'-DDE	40.	U
72-20-8	Endrin	40.	U
33213-65-9	Endosulfan II	40.	U
72-54-8	4,4'-DDD	40.	U
1031-07-8	Endosulfan sulfate	40.	U
50-29-3	4,4'-DDT	40.	U
72-43-5	Methoxychlor	200.	U
53494-70-5	Endrin ketone	40.	U
5103-71-9	alpha-Chlordane	200.	U
5103-74-2	gamma-Chlordane	200.	U
8001-35-2	Toxaphene	400.	U
12674-11-2	Aroclor-1016	200.	U
11104-28-2	Aroclor-1221	200.	U
11141-16-5	Aroclor-1232	200.	U
53469-21-9	Aroclor-1242	200.	U
12672-29-6	Aroclor-1248	200.	U
11097-69-1	Aroclor-1254	400.	U
11096-82-5	Aroclor-1260	400.	U

2062

EPA SAMPLE NO.

EHW91

1D

PESTICIDE ORGANICS ANALYSIS DATA SHEET

Lab Name: PEI Contract: 68-D9-0037

Lab Code: PEI Case No.: 16377 SAS No.: SDG No.: EHM01

Matrix: (soil/water) WATER Lab Sample ID: X1-05-070-15A

Sample wt/vol: 1000.0 (g/mL) ML Lab File ID: YWP091

Level: (low/med) LOW Date Received: 5/10/91

% Moisture: not dec. 100. dec._____ Date Extracted: 5/14/91

Extraction: (SepF/Cont/Sonc) CONT Date Analyzed: 5/28/91

GPC Cleanup: (Y/N) N pH: 7.0 Dilution Factor: 1.00

CAS NO.	COMPOUND	CONCENTRATION UNITS: (ug/L or ug/Kg) UG/L	Q
319-84-6	alpha-BHC	.050	U
319-85-7	beta-BHC	.050	U
319-86-8	delta-BHC	.050	U
58-89-9	gamma-BHC	.050	U
76-44-8	Heptachlor	.050	U
309-00-2	Aldrin	.050	U
1024-57-3	Heptachlor epoxide	.050	U
959-98-8	Endosulfan I	.050	U
60-57-1	Dieldrin	.10	U
72-55-9	4,4'-DDE	.10	U
72-20-8	Endrin	.10	U
33213-65-9	Endosulfan II	.10	U
72-54-8	4,4'-DDD	.10	U
1031-07-8	Endosulfan sulfate	.10	U
50-29-3	4,4'-DDT	.10	U
72-43-5	Methoxychlor	.50	U
53494-70-5	Endrin ketone	.10	U
5103-71-9	alpha-Chlordane	.50	U
5103-74-2	gamma-Chlordane	.50	U
8001-35-2	Toxaphene	1.0	U
12674-11-2	Aroclor-1016	.50	U
11104-28-2	Aroclor-1221	.50	U
11141-16-5	Aroclor-1232	.50	U
53469-21-9	Aroclor-1242	.50	U
12672-29-6	Aroclor-1248	.50	U
11097-69-1	Aroclor-1254	1.0	U
11096-82-5	Aroclor-1260	1.0	U

2067

1D
PESTICIDE ORGANICS ANALYSIS DATA SHEET

EPA SAMPLE NO.

EHW92

Lab Name: PEI Contract: 68-D9-0037

Lab Code: PEI Case No.: 16377 SAS No.: SDG No.: EHM01

Matrix: (soil/water) WATER Lab Sample ID: X1-05-070-16A

Sample wt/vol: 1000.0 (g/mL) ML Lab File ID: YWP092

Level: (low/med) LOW Date Received: 5/10/91

% Moisture: not dec. 100. dec._____ Date Extracted: 5/14/91

Extraction: (SepF/Cont/Sonc) CONT Date Analyzed: 5/28/91

GPC Cleanup: (Y/N) N pH: 7.0 Dilution Factor: 1.00

CAS NO.	COMPOUND	CONCENTRATION UNITS: (ug/L or ug/Kg) UG/L	Q
319-84-6	alpha-BHC	.050	U
319-85-7	beta-BHC	.050	U
319-86-8	delta-BHC	.050	U
58-89-9	gamma-BHC	.050	U
76-44-8	Heptachlor	.050	U
309-00-2	Aldrin	.050	U
1024-57-3	Heptachlor epoxide	.050	U
959-98-8	Endosulfan I	.050	U
60-57-1	Dieldrin	.10	U
72-55-9	4,4'-DDE	.10	U
72-20-8	Endrin	.10	U
33213-65-9	Endosulfan II	.10	U
72-54-8	4,4'-DDD	.10	U
1031-07-8	Endosulfan sulfate	.10	U
50-29-3	4,4'-DDT	.10	U
72-43-5	Methoxychlor	.50	U
53494-70-5	Endrin ketone	.10	U
5103-71-9	alpha-Chlordane	.50	U
5103-74-2	gamma-Chlordane	.50	U
8001-35-2	Toxaphene	1.0	U
12674-11-2	Aroclor-1016	.50	U
11104-28-2	Aroclor-1221	.50	U
11141-16-5	Aroclor-1232	.50	U
53469-21-9	Aroclor-1242	.50	U
12672-29-6	Aroclor-1248	.50	U
11097-69-1	Aroclor-1254	1.0	U
11096-82-5	Aroclor-1260	1.0	U

2072
EPA SAMPLE NO.

EJW94

1D
PESTICIDE ORGANICS ANALYSIS DATA SHEET

Lab Name: PEI Contract: 68-D9-0037

Lab Code: PEI Case No.: 16377 SAS No.: SDG No.: EHM01

Matrix: (soil/water) WATER Lab Sample ID: X1-05-070-17A

Sample wt/vol: 1000.0 (g/mL) ML Lab File ID: YWP094

Level: (low/med) LOW Date Received: 5/10/91

% Moisture: not dec. 100. dec._____ Date Extracted: 5/14/91

Extraction: (SepF/Cont/Sonc) CONT Date Analyzed: 5/28/91

GPC Cleanup: (Y/N) N pH: 7.0 Dilution Factor: 1.00

CAS NO.	COMPOUND	CONCENTRATION UNITS: (ug/L or ug/Kg) UG/L	Q
319-84-6	alpha-BHC	.050	U
319-85-7	beta-BHC	.050	U
319-86-8	delta-BHC	.050	U
58-89-9	gamma-BHC	.050	U
76-44-8	Heptachlor	.050	U
309-00-2	Aldrin	.050	U
1024-57-3	Heptachlor epoxide	.050	U
959-98-8	Endosulfan I	.050	U
60-57-1	Dieldrin	.10	U
72-55-9	4,4'-DDE	.10	U
72-20-8	Endrin	.10	U
33213-65-9	Endosulfan II	.10	U
72-54-8	4,4'-DDD	.10	U
1031-07-8	Endosulfan sulfate	.10	U
50-29-3	4,4'-DDT	.10	U
72-43-5	Methoxychlor	.50	U
53494-70-5	Endrin ketone	.10	U
5103-71-9	alpha-Chlordane	.50	U
5103-74-2	gamma-Chlordane	.50	U
8001-35-2	Toxaphene	1.0	U
12674-11-2	Aroclor-1016	.50	U
11104-28-2	Aroclor-1221	.50	U
11141-16-5	Aroclor-1232	.50	U
53469-21-9	Aroclor-1242	.50	U
12672-29-6	Aroclor-1248	.50	U
11097-69-1	Aroclor-1254	1.0	U
11096-82-5	Aroclor-1260	1.0	U

2077

EPA SAMPLE NO.

EJW99

1D

PESTICIDE ORGANICS ANALYSIS DATA SHEET

Lab Name: PEI Contract: 68-D9-0037

Lab Code: PEI Case No.: 16377 SAS No.: SDG No.: EHM01

Matrix: (soil/water) WATER Lab Sample ID: X1-05-070-18A

Sample wt/vol: 1000.0 (g/mL) ML Lab File ID: YWP2099

Level: (low/med) LOW Date Received: 5/10/91

% Moisture: not dec. 100. dec._____ Date Extracted: 5/14/91

Extraction: (SepF/Cont/Sonc) CONT Date Analyzed: 5/28/91

GPC Cleanup: (Y/N) N pH: 5.0 Dilution Factor: 1.00

CAS NO.	COMPOUND	CONCENTRATION UNITS: (ug/L or ug/Kg) UG/L	Q
319-84-6	alpha-BHC	.050	U
319-85-7	beta-BHC	.050	U
319-86-8	delta-BHC	.050	U
58-89-9	gamma-BHC	.050	U
76-44-8	Heptachlor	.050	U
309-00-2	Aldrin	.050	U
1024-57-3	Heptachlor epoxide	.050	U
959-98-8	Endosulfan I	.050	U
60-57-1	Dieldrin	.10	U
72-55-9	4,4'-DDE	.10	U
72-20-8	Endrin	.10	U
33213-65-9	Endosulfan II	.10	U
72-54-8	4,4'-DDD	.10	U
1031-07-8	Endosulfan sulfate	.10	U
50-29-3	4,4'-DDT	.10	U
72-43-5	Methoxychlor	.50	U
53494-70-5	Endrin ketone	.10	U
5103-71-9	alpha-Chlordane	.50	U
5103-74-2	gamma-Chlordane	.50	U
8001-35-2	Toxaphene	1.0	U
12674-11-2	Aroclor-1016	.50	U
11104-28-2	Aroclor-1221	.50	U
11141-16-5	Aroclor-1232	.50	U
53469-21-9	Aroclor-1242	.50	U
12672-29-6	Aroclor-1248	.50	U
11097-69-1	Aroclor-1254	1.0	U
11096-82-5	Aroclor-1260	1.0	U

1D
PESTICIDE ORGANICS ANALYSIS DATA SHEET

EPA SAMPLE NO.

EKF57

Lab Name: PEI Contract: 68-D9-0037

Lab Code: PEI Case No.: 16377 SAS No.: SDG No.: EHM01

Matrix: (soil/water) WATER Lab Sample ID: X1-05-070-08A

Sample wt/vol: 1000.0 (g/mL) ML Lab File ID: YWP2L057

Level: (low/med) LOW Date Received: 5/ 9/91

% Moisture: not dec. 100. dec._____ Date Extracted: 5/14/91

Extraction: (SepF/Cont/Sonc) CONT Date Analyzed: 5/30/91

GPC Cleanup: (Y/N) N pH: 7.0 Dilution Factor: 50.00

CAS NO.	COMPOUND	CONCENTRATION UNITS: (ug/L or ug/Kg) UG/L	Q
319-84-6	alpha-BHC	2.5	U
319-85-7	beta-BHC	2.5	U
319-86-8	delta-BHC	2.5	U
58-89-9	gamma-BHC	2.5	U
76-44-8	Heptachlor	2.5	U
309-00-2	Aldrin	2.5	U
1024-57-3	Heptachlor epoxide	2.5	U
959-98-8	Endosulfan I	2.5	U
60-57-1	Dieldrin	5.0	U
72-55-9	4,4'-DDE	5.0	U
72-20-8	Endrin	5.0	U
33213-65-9	Endosulfan II	5.0	U
72-54-8	4,4'-DDD	5.0	U
1031-07-8	Endosulfan sulfate	5.0	U
50-29-3	4,4'-DDT	5.0	U
72-43-5	Methoxychlor	25.	U
53494-70-5	Endrin ketone	5.0	U
5103-71-9	alpha-Chlordane	25.	U
5103-74-2	gamma-Chlordane	25.	U
8001-35-2	Toxaphene	50.	U
12674-11-2	Aroclor-1016	25.	U
11104-28-2	Aroclor-1221	25.	U
11141-16-5	Aroclor-1232	25.	U
53469-21-9	Aroclor-1242	130.	
12672-29-6	Aroclor-1248	25.	U
11097-69-1	Aroclor-1254	50.	U
11096-82-5	Aroclor-1260	50.	U

1D
PESTICIDE ORGANICS ANALYSIS DATA SHEET

EPA SAMPLE NO.
2093
EKX66

Lab Name: PEI Contract: 68-D9-0037

Lab Code: PEI Case No.: 16377 SAS No.: SDG No.: EHM01

Matrix: (soil/water) WATER Lab Sample ID: X1-05-070-14A

Sample wt/vol: 1000.0 (g/mL) ML Lab File ID: YWP066

Level: (low/med) LOW Date Received: 5/10/91

% Moisture: not dec. 100. dec._____ Date Extracted: 5/14/91

Extraction: (SepF/Cont/Sonc) CONT Date Analyzed: 5/28/91

GPC Cleanup: (Y/N) N pH: 7.0 Dilution Factor: 1.00

CAS NO.	COMPOUND	CONCENTRATION UNITS: (ug/L or ug/Kg) UG/L	Q
319-84-6	alpha-BHC	.050	U
319-85-7	beta-BHC	.050	U
319-86-8	delta-BHC	.050	U
58-89-9	gamma-BHC	.050	U
76-44-8	Heptachlor	.050	U
309-00-2	Aldrin	.050	U
1024-57-3	Heptachlor epoxide	.050	U
959-98-8	Endosulfan I	.050	U
60-57-1	Dieldrin	.10	U
72-55-9	4,4'-DDE	.10	U
72-20-8	Endrin	.10	U
33213-65-9	Endosulfan II	.10	U
72-54-8	4,4'-DDD	.10	U
1031-07-8	Endosulfan sulfate	.10	U
50-29-3	4,4'-DDT	.10	U
72-43-5	Methoxychlor	.50	U
53494-70-5	Endrin ketone	.10	U
5103-71-9	alpha-Chlordane	.50	U
5103-74-2	gamma-Chlordane	.50	U
8001-35-2	Toxaphene	1.0	U
12674-11-2	Aroclor-1016	.50	U
11104-28-2	Aroclor-1221	.50	U
11141-16-5	Aroclor-1232	.50	U
53469-21-9	Aroclor-1242	.50	U
12672-29-6	Aroclor-1248	.50	U
11097-69-1	Aroclor-1254	1.0	U
11096-82-5	Aroclor-1260	1.0	U

2098

EPA SAMPLE NO.

EMN98

1D

PESTICIDE ORGANICS ANALYSIS DATA SHEET

Lab Name: PEI Contract: 68-D9-0037

Lab Code: PEI Case No.: 16377 SAS No.: SDG No.: EHM01

Matrix: (soil/water) WATER Lab Sample ID: X1-05-070-19A

Sample wt/vol: 1000.0 (g/mL) ML Lab File ID: YWPL098

Level: (low/med) LOW Date Received: 5/10/91

% Moisture: not dec. 100. dec._____ Date Extracted: 5/14/91

Extraction: (SepF/Cont/Sonc) CONT Date Analyzed: 5/28/91

GPC Cleanup: (Y/N) N pH: 7.0 Dilution Factor: 10.00

CAS NO.	COMPOUND	CONCENTRATION UNITS: (ug/L or ug/Kg) UG/L	Q
319-84-6	alpha-BHC	.50	U
319-85-7	beta-BHC	.50	U
319-86-8	delta-BHC	.50	U
58-89-9	gamma-BHC	.50	U
76-44-8	Heptachlor	.50	U
309-00-2	Aldrin	.50	U
1024-57-3	Heptachlor epoxide	.50	U
959-98-8	Endosulfan I	.50	U
60-57-1	Dieldrin	1.0	U
72-55-9	4,4'-DDE	1.0	U
72-20-8	Endrin	1.0	U
33213-65-9	Endosulfan II	1.0	U
72-54-8	4,4'-DDD	1.0	U
1031-07-8	Endosulfan sulfate	1.0	U
50-29-3	4,4'-DDT	1.0	U
72-43-5	Methoxychlor	5.0	U
53494-70-5	Endrin ketone	1.0	U
5103-71-9	alpha-Chlordane	5.0	U
5103-74-2	gamma-Chlordane	5.0	U
8001-35-2	Toxaphene	10.	U
12674-11-2	Aroclor-1016	5.0	U
11104-28-2	Aroclor-1221	5.0	U
11141-16-5	Aroclor-1232	5.0	U
53469-21-9	Aroclor-1242	5.0	U
12672-29-6	Aroclor-1248	5.0	U
11097-69-1	Aroclor-1254	10.	U
11096-82-5	Aroclor-1260	10.	U

2102

EPA SAMPLE NO.

ES387

1D

PESTICIDE ORGANICS ANALYSIS DATA SHEET

Lab Name: PEI Contract: 68-D9-0037

Lab Code: PEI Case No.: 16377 SAS No.: SDG No.: EHM01

Matrix: (soil/water) SOIL Lab Sample ID: X1-05-070-09A

Sample wt/vol: 30.0 (g/mL) G Lab File ID: YWP0387

Level: (low/med) LOW Date Received: 5/ 9/91

% Moisture: not dec. 32. dec._____ Date Extracted: 5/19/91

Extraction: (SepF/Cont/Sonc) SONC Date Analyzed: 5/31/91

GPC Cleanup: (Y/N) Y pH: 5.0 Dilution Factor: 1.00

CAS NO.	COMPOUND	CONCENTRATION UNITS: (ug/L or ug/Kg) UG/KG	Q
319-84-6	alpha-BHC	24.	U
319-85-7	beta-BHC	24.	U
319-86-8	delta-BHC	24.	U
58-89-9	gamma-BHC	24.	U
76-44-8	Heptachlor	24.	U
309-00-2	Aldrin	24.	U
1024-57-3	Heptachlor epoxide	24.	U
959-98-8	Endosulfan I	24.	U
60-57-1	Dieldrin	47.	U
72-55-9	4,4'-DDE	47.	U
72-20-8	Endrin	47.	U
33213-65-9	Endosulfan II	47.	U
72-54-8	4,4'-DDD	47.	U
1031-07-8	Endosulfan sulfate	47.	U
50-29-3	4,4'-DDT	47.	U
72-43-5	Methoxychlor	240.	U
53494-70-5	Endrin ketone	47.	U
5103-71-9	alpha-Chlordane	240.	U
5103-74-2	gamma-Chlordane	240.	U
8001-35-2	Toxaphene	470.	U
12674-11-2	Aroclor-1016	240.	U
11104-28-2	Aroclor-1221	240.	U
11141-16-5	Aroclor-1232	240.	U
53469-21-9	Aroclor-1242	240.	U
12672-29-6	Aroclor-1248	240.	U
11097-69-1	Aroclor-1254	470.	U
11096-82-5	Aroclor-1260	470.	U

1D
PESTICIDE ORGANICS ANALYSIS DATA SHEET

EPA SAMPLE NO. 2111

ES388

Lab Name: PEI Contract: 68-D9-0037

Lab Code: PEI Case No.: 16377 SAS No.: SDG No.: EHM01

Matrix: (soil/water) SOIL Lab Sample ID: X1-05-070-10A

Sample wt/vol: 30.1 (g/mL) G Lab File ID: YWP0388

Level: (low/med) LOW Date Received: 5/ 9/91

% Moisture: not dec. 39. dec._____ Date Extracted: 5/19/91

Extraction: (SepF/Cont/Sonc) SONC Date Analyzed: 5/31/91

GPC Cleanup: (Y/N) Y pH: 5.0 Dilution Factor: 1.00

CAS NO.	COMPOUND	CONCENTRATION UNITS: (ug/L or ug/Kg) UG/KG	Q
319-84-6	alpha-BHC	26.	U
319-85-7	beta-BHC	26.	U
319-86-8	delta-BHC	26.	U
58-89-9	gamma-BHC	26.	U
76-44-8	Heptachlor	26.	U
309-00-2	Aldrin	26.	U
1024-57-3	Heptachlor epoxide	26.	U
959-98-8	Endosulfan I	26.	U
60-57-1	Dieldrin	52.	U
72-55-9	4,4'-DDE	52.	U
72-20-8	Endrin	52.	U
33213-65-9	Endosulfan II	52.	U
72-54-8	4,4'-DDD	52.	U
1031-07-8	Endosulfan sulfate	52.	U
50-29-3	4,4'-DDT	52.	U
72-43-5	Methoxychlor	260.	U
53494-70-5	Endrin ketone	52.	U
5103-71-9	alpha-Chlordane	260.	U
5103-74-2	gamma-Chlordane	260.	U
8001-35-2	Toxaphene	520.	U
12674-11-2	Aroclor-1016	260.	U
11104-28-2	Aroclor-1221	260.	U
11141-16-5	Aroclor-1232	260.	U
53469-21-9	Aroclor-1242	260.	U
12672-29-6	Aroclor-1248	260.	U
11097-69-1	Aroclor-1254	520.	U
11096-82-5	Aroclor-1260	520.	U

1D
PESTICIDE ORGANICS ANALYSIS DATA SHEET

EPA SAMPLE NO.

ES389

Lab Name: PEI Contract: 68-D9-0037

Lab Code: PEI Case No.: 16377 SAS No.: SDG No.: EHM01

Matrix: (soil/water) SOIL Lab Sample ID: X1-05-070-11A

Sample wt/vol: 30.0 (g/mL) G Lab File ID: YWP0389

Level: (low/med) LOW Date Received: 5/ 9/91

% Moisture: not dec. 19. dec._____ Date Extracted: 5/19/91

Extraction: (SepF/Cont/Sonc) SONC Date Analyzed: 5/31/91

GPC Cleanup: (Y/N) Y pH: 5.0 Dilution Factor: 1.00

CAS NO.	COMPOUND	CONCENTRATION UNITS: (ug/L or ug/Kg) UG/KG	Q
319-84-6	alpha-BHC	20.	U
319-85-7	beta-BHC	20.	U
319-86-8	delta-BHC	20.	U
58-89-9	gamma-BHC	20.	U
76-44-8	Heptachlor	20.	U
309-00-2	Aldrin	20.	U
1024-57-3	Heptachlor epoxide	20.	U
959-98-8	Endosulfan I	20.	U
60-57-1	Dieldrin	44.	
72-55-9	4,4'-DDE	40.	U
72-20-8	Endrin	40.	U
33213-65-9	Endosulfan II	40.	U
72-54-8	4,4'-DDD	40.	U
1031-07-8	Endosulfan sulfate	40.	U
50-29-3	4,4'-DDT	40.	U
72-43-5	Methoxychlor	200.	U
53494-70-5	Endrin ketone	40.	U
5103-71-9	alpha-Chlordane	200.	U
5103-74-2	gamma-Chlordane	200.	U
8001-35-2	Toxaphene	400.	U
12674-11-2	Aroclor-1016	200.	U
11104-28-2	Aroclor-1221	200.	U
11141-16-5	Aroclor-1232	200.	U
53469-21-9	Aroclor-1242	200.	U
12672-29-6	Aroclor-1248	200.	U
11097-69-1	Aroclor-1254	400.	U
11096-82-5	Aroclor-1260	400.	U

2129

EPA SAMPLE NO.

ES390

1D
PESTICIDE ORGANICS ANALYSIS DATA SHEET

Lab Name: PEI Contract: 68-D9-0037

Lab Code: PEI Case No.: 16377 SAS No.: SDG No.: EHM01

Matrix: (soil/water) SOIL Lab Sample ID: X1-05-070-12A

Sample wt/vol: 30.1 (g/mL) G Lab File ID: YWP0390

Level: (low/med) LOW Date Received: 5/ 9/91

% Moisture: not dec. 34. dec._____ Date Extracted: 5/19/91

Extraction: (SepF/Cont/Sonc) SONC Date Analyzed: 5/31/91

GPC Cleanup: (Y/N) Y pH: 5.0 Dilution Factor: 1.00

CAS NO.	COMPOUND	CONCENTRATION UNITS: (ug/L or ug/Kg) UG/KG	Q
319-84-6	alpha-BHC	24.	U
319-85-7	beta-BHC	24.	U
319-86-8	delta-BHC	24.	U
58-89-9	gamma-BHC	24.	U
76-44-8	Heptachlor	24.	U
309-00-2	Aldrin	24.	U
1024-57-3	Heptachlor epoxide	24.	U
959-98-8	Endosulfan I	24.	U
60-57-1	Dieldrin	49.	U
72-55-9	4,4'-DDE	49.	U
72-20-8	Endrin	49.	U
33213-65-9	Endosulfan II	49.	U
72-54-8	4,4'-DDD	49.	U
1031-07-8	Endosulfan sulfate	49.	U
50-29-3	4,4'-DDT	49.	U
72-43-5	Methoxychlor	240.	U
53494-70-5	Endrin ketone	49.	U
5103-71-9	alpha-Chlordane	240.	U
5103-74-2	gamma-Chlordane	240.	U
8001-35-2	Toxaphene	490.	U
12674-11-2	Aroclor-1016	240.	U
11104-28-2	Aroclor-1221	240.	U
11141-16-5	Aroclor-1232	240.	U
53469-21-9	Aroclor-1242	240.	U
12672-29-6	Aroclor-1248	240.	U
11097-69-1	Aroclor-1254	490.	U
11096-82-5	Aroclor-1260	490.	U

2138

1D
PESTICIDE ORGANICS ANALYSIS DATA SHEET

EPA SAMPLE NO.

ES391

Lab Name: PEI Contract: 68-D9-0037

Lab Code: PEI Case No.: 16377 SAS No.: SDG No.: EHM01

Matrix: (soil/water) SOIL Lab Sample ID: X1-05-070-13A

Sample wt/vol: 30.0 (g/mL) G Lab File ID: YWP0391

Level: (low/med) LOW Date Received: 5/ 9/91

% Moisture: not dec. 49. dec._____ Date Extracted: 5/19/91

Extraction: (SepF/Cont/Sonc) SONC Date Analyzed: 5/31/91

GPC Cleanup: (Y/N) Y pH: 5.0 Dilution Factor: 1.00

CAS NO.	COMPOUND	CONCENTRATION UNITS: (ug/L or ug/Kg) UG/KG	Q
319-84-6	alpha-BHC	31.	U
319-85-7	beta-BHC	31.	U
319-86-8	delta-BHC	31.	U
58-89-9	gamma-BHC	31.	U
76-44-8	Heptachlor	31.	U
309-00-2	Aldrin	31.	U
1024-57-3	Heptachlor epoxide	31.	U
959-98-8	Endosulfan I	31.	U
60-57-1	Dieldrin	62.	U
72-55-9	4,4'-DDE	62.	U
72-20-8	Endrin	62.	U
33213-65-9	Endosulfan II	62.	U
72-54-8	4,4'-DDD	62.	U
1031-07-8	Endosulfan sulfate	62.	U
50-29-3	4,4'-DDT	62.	U
72-43-5	Methoxychlor	310.	U
53494-70-5	Endrin ketone	62.	U
5103-71-9	alpha-Chlordane	310.	U
5103-74-2	gamma-Chlordane	310.	U
8001-35-2	Toxaphene	620.	U
12674-11-2	Aroclor-1016	310.	U
11104-28-2	Aroclor-1221	310.	U
11141-16-5	Aroclor-1232	310.	U
53469-21-9	Aroclor-1242	310.	U
12672-29-6	Aroclor-1248	310.	U
11097-69-1	Aroclor-1254	620.	U
11096-82-5	Aroclor-1260	620.	U

PEI Organics

1987

Data Chem Laboratories Inorganic

Leachate Wells ALL HITS

methylene chloride	4100 B	µg/L	LW2
acetone	6400 J	µg/L	LW2
2 butanone	4100 JD	µg/L	LW2 (MSD)
4 methyl 2 pentanone	10000 J	µg/L	LW2
toluene FLAMMABLE	1800	µg/L	LW2
chlorobenzene FLAMMABLE	140,000	µg/L	LW1 (Dup)
Aroclor 1242	130	µg/L	LW1
antimony ~~LW2~~	31.8B	µg/L	LW2
arsenic	16.5J	"	LW2
chromium	47.1	"	LW2
copper	119		LW2 in Blank
lead	108		LW2
mercury	.53		LW2 2.5 x DL
zinc	406		LW2
~~nickel~~	~~HD2~~		~~LW2~~

Monitoring Wells

benzene 10 µg/L MW2

★ chlorobenzene 120 µg/L MW2

arsenic 15.1 J MW2 ⇐ not 10x Bkgd or 3x DL

★ manganese 2320 MW2 ← in Blank

antimony 73.4 MW2 ← not 3x DL

nickel 50.0 MW2 ← not 3x DL

Soils

☆ methylene chloride	680 D	S7	
☆ acetone	1100 D	S7	
☆ 2 butanone (MEK	430 D	S7	
☆ Chlorobenzene	100	S7	
	2500 E	S5	
☆ fluoranthene	1200 J	S7	
☆ Pyrene	970 J	S7	
Dieldrin	44		not 3 x DL

---

cadmium	14.6	S5	not 10 x Bkgd
chromium	78.2	S7	not 10 x Bkgd
lead	284 * J	S7	not 10 x Bkgd
☆ Mercury	0.46	S2	
	0.20	S3	

2-1 ~~IIII~~ ~~IIII~~ = 10 × 2.89 = 28.9

2-2 25 = 69 5 × 2.89 20 × 2.75

2-3 44 + 41 + 15 = 100

15 × 2.89 = 43.35
85 × 2.75 = 233.75
277.10

10
5
15
30

85

29
14.45
55
98

277
98
375

METRO POP TOTALS

	1/4 0-1/4	1/2 1/4-1/2	1 1/2-1	2 1-2	3 2-3	4 3-4	
P-P-H ST. CLAIR COUNTY	87	116	1231	2769	5581	8901	
P-P-H MADISON COUNTY				41	1658	3377	
CITY OF E. ST. LOUIS (Planim.)	390	975	3706	8339	6276	1956	
CITY OF MADISON (P)					408	933	
CITY OF ST. LOUIS (P)						16528	
TOTAL	477	1091 1568	4937 6505	11149 17.654	13923 31,577	31695 63,272	= 63,272

PERSON PER HOUSEHOLD

ST. CLAIR COUNTY

	0-1/4	1/4-1/2	1/2-1	1-2	2-3	3-4
# of Houses	30	40	426	958	1931	3060
P-P-H VALUE	2.89	2.89	2.89	2.89	2.89	2.89
TOTAL # PEOPLE	87	116	1231	2769	5581	8901

87 + 116

P-P-H MADISON COUNTY

	1/4 - 1/2	1/2 - 1	1 - 2	2 - 3	3 - 4	
# of Homes			15	603	1228	
P-P-H VALUE			2.75	2.75	2.75	
TOTAL # PEOPLE			41	1658	3377	

EAST ST. LOUIS IL.

POPULATION CALCULATION SHEET

[1] Population of City (or Other Municipality) 55,200 People Year 1940

[2] Area of City (Planimeter Reading) 4,119 ~~Square Inches~~ People/mi2

[3] Population Density [[1] ÷ [2]] 591 People per Square Inch

[4] Average Persons per House (Census) — Year 1940

	1/4 mile	1/2 mile	1 mile	2 mile	3 mile	4 mile
[5] Area of City Within Radius (Planimeter Reading)	0.66	1.65	6.27	14.11	10.62	3.31
[6] Population of City Within Radius [[5] x [3]]	390	975	3706	8339	6276	1956
[7] House Count Within Radius, Outside City						
[8] Population From House Count [[7] x [4]]						
[9] Total Population Within Radius [[6] + [8]]	390	975	3706	8339	6276	1956

ERROR CHECK:

[10] Area of City Outside 4 miles — Square Inches

[11] Population of City Outside of 4 miles [[10] x [3]] — People

[12] Population of City [$\sum$ [6] + [11]] — People $\stackrel{?}{=}$ [1]

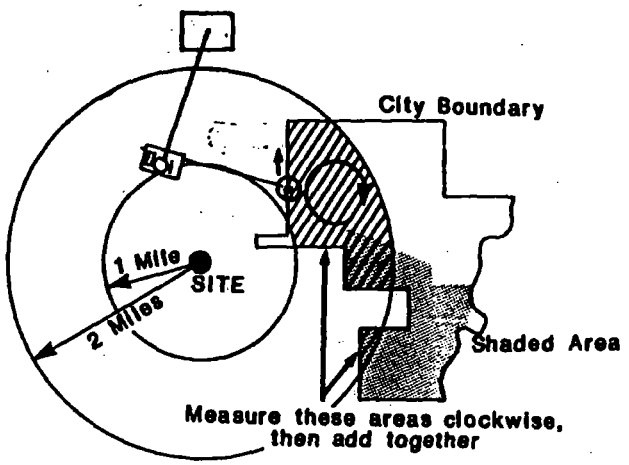

PLANIMETER VERNIER SCALE

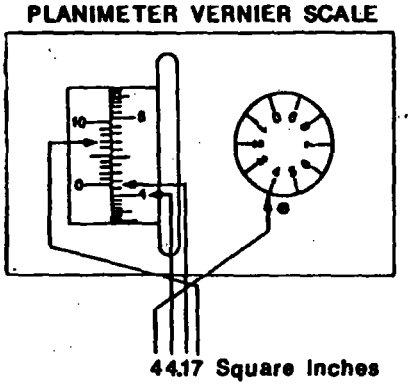

MADISON, IL

POPULATION CALCULATION SHEET

[1] Population of City (or Other Municipality) 5,915 People Year 1960

[2] Area of City (Planimeter Reading) 2,817 Square Inches

[3] Population Density [[1] ÷ [2]] 404 People per Square Inch

[4] Average Persons per House (Census) — Year 1960

	1/4 mile	1/2 mile	1 mile	2 mile	3 mile	4 mile
[5] Area of City Within Radius (Planimeter Reading)					1.01	2.31
[6] Population of City Within Radius [[5] x [3]]					408	933
[7] House Count Within Radius, Outside City						
[8] Population From House Count [[7] x [4]]						
[9] Total Population Within Radius [[6] + [8]]					408	933

ERROR CHECK:

[10] Area of City Outside 4 miles — Square Inches

[11] Population of City Outside of 4 miles [[10] x [3]] — People

[12] Population of City [Σ [6] + [11]] — People $\stackrel{?}{=}$ [1]

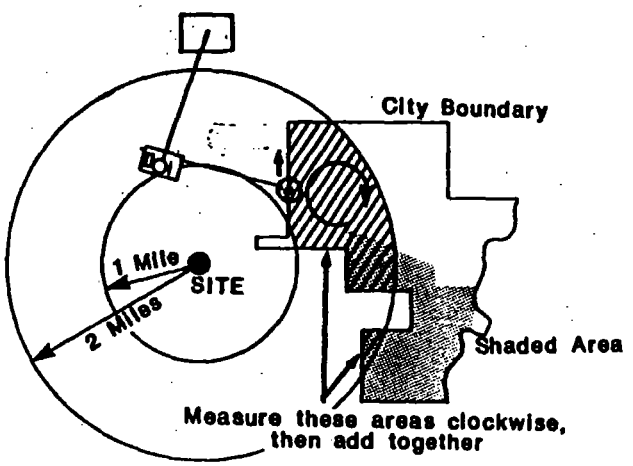

PLANIMETER VERNIER SCALE

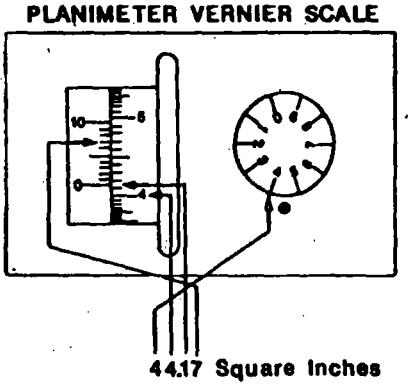

ST. LOUIS, MO

POPULATION CALCULATION SHEET

[1] Population of City (or Other Municipality) 396,685 People Year 1980

[2] Area of City (Planimeter Reading) 6,461 ~~Square Inches~~ People/mi²

[3] Population Density [[1] ÷ [2]] 927 People per Square Inch

[4] Average Persons per House (Census) — Year 1980

	1/4 mile	1/2 mile	1 mile	2 mile	3 mile	4 mile
[5] Area of City Within Radius (Planimeter Reading)						17.83
[6] Population of City Within Radius [[5] x [3]]						16,528
[7] House Count Within Radius, Outside City						
[8] Population From House Count [[7] x [4]]						
[9] Total Population Within Radius [[6] + [8]]						16528

ERROR CHECK:

[10] Area of City Outside 4 miles — Square Inches

[11] Population of City Outside of 4 miles [[10] x [3]] — People

[12] Population of City [Σ [6] + [11]] — People $\stackrel{?}{=}$ [1]

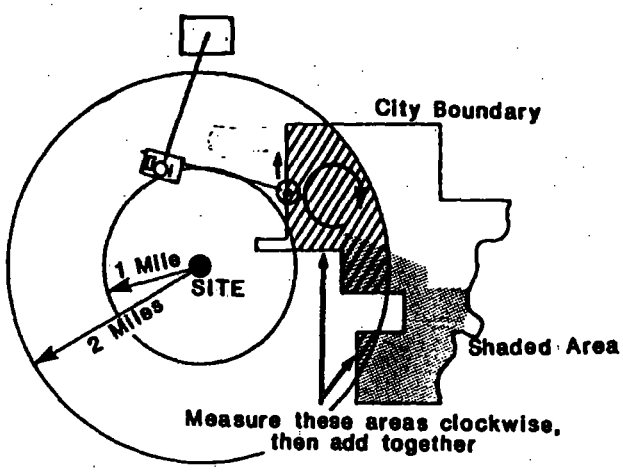

PLANIMETER VERNIER SCALE

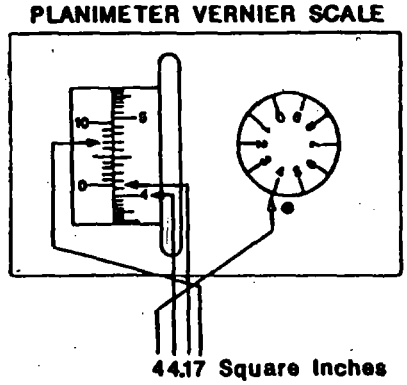

1:24,000 SCALE

1 map inch : 24,000 Land Inches
" : 2000 ft
= 0.3788 miles

$(2000)^2 = (5280)^2$
$4 \times 10^6 = 27,878,400$

$1 \text{ map in}^2 \quad \frac{27.8784 \times \cancel{10^6}}{4 \times \cancel{10^6}} = 6.97 \text{ sq mi}$

OR
$(0.3788)^2 = (1)^2 \text{ mi}$
$0.143489 = 1 \text{ mi}^2 = 6.969$

~~1 inch² = 6.97 mi²~~

1 map inch = 0.3788 mi
1 in² : 0.143489
$\boxed{6.97 \text{ in}^2 = 1 \text{ mi}}$

$\frac{\text{People}}{\text{mi}^2} \times \frac{\text{mi}^2}{\text{in}^2} = \frac{\text{People}}{\text{in}^2}$

The MDS site lies near the base of an abandoned channel of the Mississippi River in the broad Mississippi River valley. The geology of the site area consists of recent valley-fill alluvium, glacial outwash alluvium ~~and~~ and bedrock. The recent valley fill alluvium has been deposited by meandering and periodic flooding of the Mississippi River. (U.S.G.S. maps____). These unconsolidated deposits consist of interfingering bodies of gravel, sand, silt and clay which were formed as channel lag, point bars, crevasse-~~sto~~ splay, flood plain, and slough or oxbow lake deposits (Reineck and Singh 1980, wells Log, Appendix F). Glacial outwash deposits of both Illinoian and Wisconsinan ages underlie the ~~recent~~ recent alluvium. These older deposits were emplaced in similar environments as the ~~recen~~ recent alluvium and both constitute the total thickness ~~to~~ of valley-fill material which was likely deposited as an uninterrupted sequence. ~~well to~~ (~~see~~ SIMRPC 1983). Well logs in the site area indicate that the thickness of the valley-fill material ranges from approximately 115 to 265 feet. Wells logs also show that the deposits are generally ~~coarser most coarse near the base, with very coarse~~ ~~often boulder size~~ very coarse, ~~often~~ as large as boulder size, near the base.

Carbonaceous

~~Near the valley fill deposits~~ overlie Mississippian and Pennsylvanian age bedrock that

Near the site, the valley fill deposits overlie shale of Carboniferous age. More regionally, this shale is a minor part of a massive limestone and dolomite unit. (SIMRPC 1983, WELL LOGS).

The principle aquifer in the site area is the unconsolidated valley-fill material and this material is considered by to be the aquifer of concern (AOC). Well logs from the site area show that water is drawn from sand and gravel deposits within the valley-fill. Depth to groundwater ~~on these well logs~~ in the site area is as shallow as 11 feet below the surface (well logs). Regional groundwater flow in the site area is to the west-southwest ~~to~~ toward the Mississippi River but may deviate from this locally as a result high discharge industrial wells. (SIMRPC 1983)

~~No confining layer is known to exist here~~

Conducive for migration, susceptable to gw. contamination
wells in very porous gravel

map of wells from Sec. 14
(many wells there.

Southwestern Illinois Metropolitan and Regional Planning Commission, (SIMRPC) 1983, A Summary of Information Related the Comprehensive Management of Groundwater Resources in Madison, Monroe, and St. Clair Counties, Illinois

~~Reineck~~
Reineck, H.E. and Singh, I.B., 1980, Depositional Sedimentary Environments, 2nd Edition, Springer-Verlag, Berlin.

ecology and environment, inc.
111 WEST JACKSON BLVD., CHICAGO, ILLINOIS 60604, TEL. 312-663-9415
International Specialists in the Environment

CRL Receipt Date 6/13/91 FIT Receipt Date 7/2/91 Review Completed 7/3/91

TO: T. Rodriguez
FROM: M. Yang
SUBJECT: Metro Disposal System Inc.
PAN: FIL04175A (1 hour charged for review) Case # 16377

Sample Description

Organics (VOA, ABN, Pest/PCB)		Inorganics (Metals, Cyanide)	
# ____	Low Soil	# 8	Low Soil
____	Low Water	6	Low Water (MW)
____	Drinking Water	____	Drinking Water
____	Other	4	~~Other~~ Leachate wells (Low water)

Project Data Status ____ Completed!!

X Incomplete, awaiting low org. soil & H_2O.

FIT Data Review Findings:

Check Data Sheets for Transcription Errors

X Compounds were detected in sample(s); see enclosed sheet.

Book No. 9 Page No. ____ Date Sampled 5/8/91

0759:2

recycled paper

Table 4-1 (Cont.)

Low Soil
MY 7/2/91

				Sample Collection Information and Parameters	S 1	S 2	S 3	S 4	S 5	S 6	S 7	S 8	9	10	11	12
											Sample Number	Background				
				Analyte Detected (values in mg/kg or ug/L)	MEHA93	MEHA 94	MEHA95	MEHA96	MEHA97	MEHA98	MEHA99	MELP98				
Solid	A,D	MES	CSC/CWC	aluminum 40	14000	18600	10100	11500	22300	15600	7650	13100				
Solid	A,D	MES	HM	antimony 2.4												
Solid	A,D	MES	HM	arsenic 2	5.1NJ	8.3NJ	4.5NJ	11.9NSJ	7.1NJ	5.2NJ	5.8NJ	9.2NSJ				
Solid	A,D	MES	CSC/CWC	barium 40	159*	591*	193*	223*	403*	323*	333*	241*				
Solid	A,D	MES	M	beryllium 1	1.3BJ	1.6BJ	0.63BJ	0.75BJ	1.9BJ	1.1BJ	0.57BJ	1.1BJ				
Solid	A,D	MES	HM	cadmium 1	2.9J	10.1	4.3		14.6	2.9J	6.9	3.3J				
Solid	D	MES	CSC/CWC	calcium 1,000	7340	7260	4690	16400	9930	34100	27300	13600				
Solid	A,D	MES	HM	chromium 2	23.5	67.4	25.8	22.0	32.0	27.6	78.2	22.4				
Solid	A,D	MES	HM	cobalt 10	10.9B	10.6B	6.7B	9.3B	11.4B	7.7B	6.3B	9.9B				
Solid	A,D	MES	HM	copper 5	21.7	46.5	31.1	22.1	91.2	34.2	54.4	25.2				
Solid	A,D	MES	HM,CSC;CWC	iron 20	22800	36100	17900	35900	31900	41000	16700	21500				
Solid	A,D	MES	HM	lead 1	75.7*SJ	125*J	105*J	29.5*J	109*J	66.4*J	284*J	60.1*J				
Solid	A,D	MES	CSC/CWC	magnesium 1,000	5360	4670	3060	4910	6000	5490	4490	6500				
Solid	A,D	MES	HM	manganese 3	214	381	125	411	479	435	255	605				
Liquid	A,D	MES	HM	mercury 0.008		0.46	0.20									
Solid	A,D	MES	HM	nickel 8	26.1	27.4	21.0	28.8	47.7	32.1	21.1	28.8				
Solid	D	MES	CSC,CWC	potassium 1000	2780	3470	1910	2710	4210	3660	1500B	3050				
Solid	A,D	MES	M	selenium 1	0.37BNWJ	0.74BNWJ	0.30BNWJ		0.82BNWJ	0.47BNWJ	0.37BNWJ					
Solid	A,D	MES	HM	silver 2												
Solid	D	MES	CSC,CWC	sodium 1000	271B	306B	75.0B	390B	990B	824B	479B	123B				
Solid	A,D	MES	HM	thallium 2		0.47B			0.43B			0.30B				
~~Solid~~	~~A,D~~	~~MES~~	~~M~~	~~tin 8~~												
Solid	A,D	MES	HM	vanadium 10	35.4	39.1	23.7	22.3	42.7	31.7	24.7	30.4				
Solid	A,D	MES	CWL,CSC,HM	zinc 4	190	622	333	120	686	288	526	134				
Solid	A	IOC	IOC	cyanide 2												

-- Not detected.

* Not analyzed for

Low Water (Leachate well) MY 7/2/91

Table 4- (Cont.)

				Sample Collection Information and Parameters	Sample Number											
					LW 1	(LW1) DUP 2	LW 3	BLANK 4	5	6	7	8	9	10	11	12
				Analyte Detected (values in mg/kg or ug/L)	MELT 98	MEKN02	MELT 99	MEKN03								
Solid	A,D	MES	CSC/CWC	aluminum -			14600									
Solid	A,D	MES	HM	antimony	30.2B		31.8B									
Solid	A,D	MES	HM	arsenic -	3.3BWJ	1.2BJ	16.5J									
Solid	A,D	MES	CSC/CWC	barium	469	464	1220									
Solid	A,D	MES	M	beryllium			2.1B									
Solid	A,D	MES	HM	cadmium												
Solid	D	MES	CSC/CWC	calcium	138000	138000	138000									
Solid	A,D	MES	HM	chromium -			47.1									
Solid	A,D	MES	HM	cobalt	6.3B	5.9B	13.2B									
Solid	A,D	MES	HM	copper -			119	23.5BJ								
Solid	A,D	MES	HM,CSC;CWC	iron	4230	3650	67500									
Solid	A,D	MES	HM	lead -	4.1	2.3B	108									
Solid	A,D	MES	CSC/CWC	magnesium	69800	68300	56400									
Solid	A,D	MES	HM	manganese -	183	185	609									
Liquid	A,D	MES	HM	mercury			0.53									
Solid	A,D	MES	HM	nickel		13.0B	74.2									
Solid	D	MES	CSC,CWC	potassium	79100	79000	65100									
Solid	A,D	MES	M	selenium												
Solid	A,D	MES	HM	silver		5.6B										
Solid	D	MES	CSC,CWC	sodium	253000	249000	120000	1028J								
Solid	A,D	MES	HM	thallium												
~~Solid~~	~~A,D~~	~~MES~~	~~M~~	~~tin~~ *												
Solid	A,D	MES	HM	vanadium			26.5B									
Solid	A,D	MES	CWL,CSC,HM	zinc -	7.1BJ	11.7BJ	406									
Solid	A	IOC	IOC	cyanide												

-- Not detected.

* Not analyzed for

Table 4- (Cont.)

Bkground

Low water (monitoring well)

MY 7/2/91

				Sample Collection Information and Parameters	MW1	DUP2	MW2	MW3	MW4	BLANK6	Sample Number 7	8	9	10	11	12
				Analyte Detected (values in mg/kg or ug/L)	MELP99	MELT96	MELT91	MELT92	MELT93	MELT97						
Solid	A,D	MES	CSC/CWC	aluminum 200												
Solid	A,D	MES	HM	antimony 60	45.2B		73.4	44.5B								
Solid	A,D	MES	HM	arsenic 10	2.4BWJ		15.1J	2.2BJ	6.4BJ							
Solid	A,D	MES	CSC/CWC	barium 200	101B	98.0B	549	235	50.0B							
Solid	A,D	MES	M	beryllium 5		1.3BJ										
Solid	A,D	MES	HM	cadmium 5												
Solid	D	MES	CSC/CWC	calcium 5000	162000	157000	368000	152000	80400	13400						
Solid	A,D	MES	HM	chromium 10												
Solid	A,D	MES	HM	cobalt 50		5.7B	6.7B									
Solid	A,D	MES	HM	copper 25		6.1BJ			13.3BJ	7.1BJ						
Solid	A,D	MES	HM,CSC;CWC	iron 100	20.8B		39200	15600	24.4B							
Solid	A,D	MES	HM	lead 3			1.4B	1.5BW	1.3B							
Solid	A,D	MES	CSC/CWC	magnesium 5000	33600	31900	113000	28800	27300	3810B						
Solid	A,D	MES	HM	manganese 15	335	323	2320	1080	4.8BJ	1.8BJ						
Liquid	A,D	MES	HM	mercury 0.2												
Solid	A,D	MES	HM	nickel 40	27.7B	22.5B	50.0									
Solid	D	MES	CSC,CWC	potassium 5000	4920BJ	4470BJ	30100J	7350J	5250J	13000						
Solid	A,D	MES	M	selenium 5	1.5BNWJ											
Solid	A,D	MES	HM	silver 10												
Solid	D	MES	CSC,CWC	sodium 5000	38000	37100	199000	29800	14900J	3710B						
Solid	A,D	MES	HM	thallium 10												
~~Solid~~	~~A,D~~	~~MES~~	~~M~~	~~tin~~ *												
Solid	A,D	MES	HM	vanadium 50	4.0BJ											
Solid	A,D	MES	CWL,CSC,HM	zinc 20	18.4BJ	22.6J	12.3BJ	15.4BJ	142	6.7B						
Solid	A	IOC	IOC	cyanide 10												

-- Not detected.

*Not analyzed for

7/3/91

UNITED STATES ENVIRONMENTAL PROTECTION AGENCY
REGION V

DATE: 6-27-91

SUBJECT: Review of Region V CLP Data
Received for Review on June 13, 1991

FROM: Charles T. Elly, Director(5SCRL)
Central Regional Laboratory Jay Thakker

7/2/91

TO: Data User: Jit

We have reviewed the data for the following case(s).

SITE NAME: Metro Disposal System INC (IL) SMO Case No. 16377

EPA Data Set No. _____ No. of Samples 18 DU/Activity Numbers TFA, TFA102

91FB04R59, R60

CRL No. 91FB40S12-25, 91FB40D22, D20

MEKN02, 03 (LW)

SMO Traffic No. MCHA93-99, MCLP98-99, MCLT91-96-98 (soil) (soil) MW MW 95

CLP Laboratory: Datachem Hrs. for Review 19
1.0 JS

Following are our findings:

See next page
6/21/91 mF

( ) Data are acceptable for use.
(X) Data are acceptable for use with qualifications.
( ) Data are preliminary - pending verification by laboratory.
( ) Data are unacceptable.

cc: Elenor McLean, Sample Mgmt.Office
Edward Kantor, EMSL-Las Vegas

INORGANIC/ORGANIC COMPLETE SDG FILE (CSF) INVENTORY CHECKLIST

Case No. 16377 SDG No. MEHA93 SDG Nos. To Follow _____ _____ _____ SAS No. _____ Date Recvd 6/13/91

EPA Lab ID: Datachem

Lab Location: UTAH

Region: 5 Audit No.: NA

Re-Submitted CSF? Yes ___ No ✓

Box No(s): NA

COMMENTS:

1-2 Not reviewers task at time of submission

5 sample tag Meha95 is not present

17 sample tag Meha95 is not present (see phone log) Sample tag was mistakely labeled Meha94 By sampler lab verified distinction of samples reviewer corrected tag to reflect Meha95

Over for additional comments.

ORIGINALS	YES	NO	N/A
CUSTODY SEALS			
1. Present on package?			✓
2. Intact upon receipt?			✓
FORM DC-2			
3. Numbering scheme accurate?	✓		
4. Are enclosed documents listed?	✓		
5. Are listed documents enclosed?		✓	
FORM DC-1			
6. Present?	✓		
7. Complete?	✓		
8. Accurate?	✓		
CHAIN-OF-CUSTODY RECORD(s)			
9. Signed?	✓		
10. Dated?	✓		
TRAFFIC REPORT(s) PACKING LIST(s)			
11. Signed?	✓		
12. Dated?	✓		
AIRBILLS/AIRBILL STICKER			
13. Present?	✓		
14. Signed?	✓		
15. Dated?	✓		
SAMPLE TAGS			
16. Does DC-1 list tags as being included?	✓		
17. Present?		✓	
OTHER DOCUMENTS			
18. Complete?	✓		
19. Legible?	✓		
20. Original?	✓		
20a. If "NO," does the copy indicate where original documents are located?			

Audited by: _____ _____ Date __/__/__

Audited by: _____ _____ Date __/__/__

Audited by: Myra Fletcher (Signature) MYRA Fletcher/Associate Project Scientist (Printed Name/Title) Date 6/18/91

TO BE COMPLETED BY CEAT

Date Recvd by CEAT: __/__/__ Date Entered: __/__/__ Date Reviewed: __/__/__

Entered by: _____ _____

Reviewed by: _____ (Signature) _____ (Printed Name/Title)

DC-2 __

Figure __

QC EXCEPTION SUMMARY REPORT

CASE # 16377
DATA SET #
LAB Q.C. #
DATE: 6/18/91

SITE Metro Disposal Sys Inc
LAB Datachem
REVIEWED BY M. Fletcher

MATRIX: [illegible]
CONC. : [illegible]
MATRIX:
CONC. :

WATER SAMPLE SPK.
WATER SAMPLE DUP.
SOIL SAMPLE SPK.
SOIL SAMPLE DUP.

	OVERALL CASE QC									MATRIX SPECIFIC QC						SAMPLE SPECIFIC QC		FIELD QC			REGIONAL QC			OTHER/ COMMENTS
	Holding Time	Cal Blanks	Int Calver	Contin Calver	Prep Blk AQ	Prep Blk SOL	ICS %R	LCS % AQ	LCS % SOL	Sol Dup RPD	Sol Spk %R	AQ Dup RPD	AQ Spk %R	Ser Dilu AQ	Ser Dilu SOL	GFAA Dup	GFAA Spike	Blank	Dup RPD	Spike %R	Blind Blank	Blind Spike %R	Split Sample RPD	
Aluminum																								
Antimony											51.5													
Arsenic											52.5													
Barium																								
Beryllium		111.72																						
Cadmium		3.2																						
Calcium																								
Chromium																								
Cobalt																								
Copper																								
Iron																								
Lead										76.5														
Magnesium																								
Manganese		1.5																						
Mercury																								
Nickel		15.9																						
Potassium																								
Selenium											73.5		67.1											
Silver											141.7													
Sodium					46.9																			
Thallium													66.5											
Tin																								
Vanadium					4																			
Zinc																								
Cyanide													60											

CASE: 16377 LAB: DATACHEM

Below are the out of control limits of case 16377 which contained 7 low level soils and 10 low level waters analyzed for total metals and total cyanide.

EVIDENTIAL AUDIT: The airbill,traffic report, and the chain of custody were present and originals. The DC2 and DC1 was original and present in the case. The sample tag MEHA95 was mistakenly submitted as MEHA94. The reviewer verified that the lab noted error and distinction of samples since two MEHA94 tags were present. The reviewer corrected the sample tag to reflect the correct sample tag number.

SOILS(MEHA93-99,MELP98)

ICP ANALYSES: The matrix spike of Sb(51.5%) is out of control. All Sb data are estimated(UJ) due to a possible elevated detection limit.

The matrix spike of Ag(141.7%) is out of control. All Ag data are < IDL and are acceptable.

The lab did not flag the spike of Mn(119.2%) since the sample result is 4 times greater than the spike added therefore the data is not qualified on this basis. All Mn data are acceptable.

The lab flagged the duplicate audit of Ba(19.7%) however the technical criteria for soils(+/- 2 X CRDL) was not exceeded therefore all Ba data are acceptable.

The CCB's of Be(1.1 ug/l, 1.7 ug/l) and Cd(3.2 ug/l) indicate contamination. MEHA93-99, MELP98 for Be and MEHA93,98, MELP98 for Cd are estimated(J).

GFAA ANALYSES: The matrix spike of As(52.5%) is out of control. All As data are estimated(J) due to a low bias.

The lab did not flag the matrix spike of Pb(6.4%) since the sample result was 4 times greater than the spike added therefore Pb data are not qualified on this basis. The duplicate audit of Pb(76.5%) indicates poor precision and all data are estimated(J).

The matrix spike of Se(73.5%) is out of control. The lab flagged(W) on Se(MEHA93-99, MELP98) indicating interference. For Se: MEHA96, MELP98 are estimated(UJ) due to interference and a possible elevated detection limit; the rest of the Se data are estimated(J) due to interference and a low bias.

OTHER QUALIFIERS: All Hg data are acceptable.

The reviewer submitted a phone log regarding the IDL of CN. The lab verified the prep blank was based on 10 ug/l and the other blanks were based on 20 ug/l and submitted a statement to reflect basis

OTHER QUALIFIERS(cont): of such. The reviewer corrected form 3 for the prep blank. However, in the reviewer professional opinion all soils should be based on a 20 ug/l IDL. The lab resubmitted a corrected form 3 and amended statement regarding the IDL and CRDL are based on 20 ug/l.
All CN data are acceptable.

WATERS(MEKN02,03,MELT91-93,96-99,MELP99)

ICP ANALYSES: The prep blanks of Na(46.9 ug/l) and V(4.0 ug/l); the CCB's of Mn(1.5 ug/l), Be(2.1 ug/l), and Cu(5.1 ug/l) all indicate contamination. MEKN03 for Na, MELP99 for V, MELT93, 97 for Mn, MELT96, 99 for Be, and ~~MEHA~~93,96,97,MEKN03 for Cu are estimated(J) due to contamination. MELT

MJ 7/3/91

The CCB of Ni(15.9 ug/l) indicates contamination. The lab did not flag the duplicate audit of Ni(38.4%) since the duplicate difference(+/- CRDL) was not exceeded therefore Ni is not qualified on this basis. For Ni: MEKN02, MELT96, 99 are estimated(J) due to contamination.

The lab did not flag the duplicate audit of Zn(80.5%) and Co(30.7%) since the duplicate difference(+/- CRDL). Zn data are qualified below and all Co data are acceptable.

GFAA ANALYSES: The matrix spike of Se(67.1%) is out of control. The lab flagged(W) on MEKN02, MELT91, 92, 98, 99, and MELP99 indicating interference. The lab did not flag the duplicate audit of Se(200%) since the duplicate difference(+/- CRDL) was not exceeded therefore Se data are not qualified on this basis.
For Se: MEKN02, MELT91, 92, 98, 99, and MELP99 are estimated(UJ) due to interference and a possible elevated detection limit: MELP99 is estimated(J) due to interference and a low bias; the rest of the data are estimated(UJ) due to a possible elevated detection limit.

The lab flagged(W) on Tl(MEKN02, MELP99, MELT91, 92, 96, 98, 99) indicating interference. The matrix spike of Tl(66.5%) is out of control. All W flagged Tl data are estimated(UJ) due to a possible elevated detection limit and interference. The rest of the Tl data are estimated(UJ) due to a possible elevated detection limit.

The lab flagged(W) on Pb(MELT92) indicating interference. The lab did not flag the duplicate audit of Pb(200%) since the diplciate difference(+/- CRDL) was not exceeded. All Pb data are acceptable.

The lab flagged(W) on As(MELP99, MELT98) indicating interference. The duplicate audit of As(200%) was not flagged by the lab since the duplicate difference(+/- CRDL) was not exceeded therefore As data are not qualified on this basis. The W flagged data are estimated(J) due to interference.

OTHER QUALIFIERS: All Hg data are acceptable.

The matrix spike of CN(60%) is out of control. All CN data are estimated(UJ) due to a possible detection limit.

MELT98/MEKN02 and MELT96/MELP99 are field duplicates. Both pairs showed good correlation.

MELT97 and MEKN03 are field blanks. The following indicated contamination: Cu(23.5 ug/l), Na(3710 ug/l), Mn(1.8 ug/l), K(3000 ug/l), and Zn(6.7 ug/l). MELT93 for Na, MELP99, MELT91-93, 96 for K, MELP99, MELT91, 92, 96, 98, MEKN02 for Zn are estimated(J) due to contamination. MELT93, 96 for Cu and MELT93 for Mn remain qualified as previously stated.

ENVIROFORMS/INORGANIC CLP

COVER PAGE - INORGANIC ANALYSES DATA PACKAGE

Lab Name: DATACHEM LABORATORIES Contract: 68-D9-0084

Lab Code: DATAC Case No.: 16377 SAS No.: SDG No.: MEHA93

SOW No.: 3/90

Sample No.	Lab Sample ID.
MEHA93	CLP7391
MEHA94	CLP7392
MEHA95	CLP7393
MEHA95D	CLP7393
MEHA95S	CLP7393
MEHA96	CLP7394
MEHA96D	CLP7394
MEHA96S	CLP7394
MEHA97	CLP7395
MEHA98	CLP7396
MEHA99	CLP7397
MEKN02	CLP7398
MEKN03	CLP7399
MELP98	CLP7400
MELP98D	CLP7400
MELP98S	CLP7400
MELP99	CLP7421
MELP99D	CLP7421
MELP99S	CLP7421
MELT91	CLP7422

RECEIVED
US EPA CENTRAL REGIONAL LAB.

Were ICP interelement corrections applied? Yes/No YES

Were ICP background corrections applied? Yes/No YES
If yes, were raw data generated before application of background corrections? Yes/No NO

Comments:

I certify that this data package is in compliance with the terms and conditions of the contract, both technically and for completeness, for other than the conditions detailed above. Release of the data contained in this hardcopy data package and in the computer-readable data submitted on floppy diskette has been authorized by the Laboratory Manager or the Manager's designee, as verified by the following signature.

Signature: [signature] Name: Brent E. Stephen

Date: June 12, 1991 Title: Section Manager

ENVIROFORMS/INORGANIC CLP

COVER PAGE - INORGANIC ANALYSES DATA PACKAGE

Lab Name: DATACHEM LABORATORIES Contract: 68-D9-0084

Lab Code: DATAC Case No.: 16377 SAS No.: SDG No.: MEHA93

SOW No.: 3/90

Sample No.	Lab Sample ID.
MELT91D	CLP7422
MELT91S	CLP7422
MELT92	CLP7423
MELT92D	CLP7423
MELT93	CLP7424
MELT93S	CLP7424
MELT96	CLP7425
MELT97	CLP7426
MELT98	CLP7401
MELT99	CLP7402

Were ICP interelement corrections applied? Yes/No YES

Were ICP background corrections applied? Yes/No YES
If yes, were raw data generated before application of background corrections? Yes/No NO

Comments:

I certify that this data package is in compliance with the terms and conditions of the contract, both technically and for completeness, for other than the conditions detailed above. Release of the data contained in this hardcopy data package and in the computer-readable data submitted on floppy diskette has been authorized by the Laboratory Manager or the Manager's designee, as verified by the following signature.

Signature: Brent E. Stephens Name: BRENT E. STEPHENS

Date: June 12, 1991 Title: SECTION MANAGER

ENVIROFORMS/INORGANIC CLP

1

INORGANIC ANALYSIS DATA SHEET

SAMPLE NO.

MEHA93

Lab Name: DATACHEM LABORATORIES Contract: 68-D9-0084

Lab Code: DATAC Case No.: 16377 SAS No.: SDG No.: MEHA93

Matrix (soil/water): SOIL Lab Sample ID: CLP7391

Level (low/med): LOW Date Received: 05/09/91

% Solids: 64.9

Concentration Units (ug/L or mg/kg dry weight): MG/KG

CAS No.	Analyte	Concentration	C	Q	M
7429-90-5	Aluminum	14000			P
7440-36-0	Antimony	7.4	U	N	P
7440-38-2	Arsenic	5.1		N	F
7440-39-3	Barium	159		*	P
7440-41-7	Beryllium	1.3	B		P
7440-43-9	Cadmium	2.9			P
7440-70-2	Calcium	7340			P
7440-47-3	Chromium	23.5			P
7440-48-4	Cobalt	10.9	B		P
7440-50-8	Copper	21.7			P
7439-89-6	Iron	22800			P
7439-92-1	Lead	75.7		S*	F
7439-95-4	Magnesium	5360			P
7439-96-5	Manganese	214			P
7439-97-6	Mercury	0.15	U		CV
7440-02-0	Nickel	26.1			P
7440-09-7	Potassium	2780			P
7782-49-2	Selenium	0.37	B	NW	F
7440-22-4	Silver	1.2	U	N	P
7440-23-5	Sodium	271	B		P
7440-28-0	Thallium	0.31	U		F
7440-62-2	Vanadium	35.4			P
7440-66-6	Zinc	190			P
	Cyanide	3.9	U		AS

Color Before: BROWN Clarity Before: Texture: MEDIUM

Color After: BROWN Clarity After: Artifacts:

Comments:

ENVIROFORMS/INORGANIC CLP

1

INORGANIC ANALYSIS DATA SHEET

SAMPLE NO.

MEHA94

Lab Name: DATACHEM LABORATORIES Contract: 68-D9-0084

Lab Code: DATAC Case No.: 16377 SAS No.: SDG No.: MEHA93

Matrix (soil/water): SOIL Lab Sample ID: CLP7392

Level (low/med): LOW Date Received: 05/09/91

% Solids: 59.6

Concentration Units (ug/L or mg/kg dry weight): MG/KG

CAS No.	Analyte	Concentration	C	Q	M
7429-90-5	Aluminum	18600			P
7440-36-0	Antimony	8.1	U	N	P
7440-38-2	Arsenic	8.3		N	F
7440-39-3	Barium	591		*	P
7440-41-7	Beryllium	1.6	B		P
7440-43-9	Cadmium	10.1			P
7440-70-2	Calcium	7260			P
7440-47-3	Chromium	67.4			P
7440-48-4	Cobalt	10.6	B		P
7440-50-8	Copper	46.5			P
7439-89-6	Iron	36100			P
7439-92-1	Lead	125		*	F
7439-95-4	Magnesium	4670			P
7439-96-5	Manganese	381			P
7439-97-6	Mercury	0.46			CV
7440-02-0	Nickel	27.4			P
7440-09-7	Potassium	3470			P
7782-49-2	Selenium	0.74	B	NW	F
7440-22-4	Silver	1.3	U	N	P
7440-23-5	Sodium	306	B		P
7440-28-0	Thallium	0.47	B		F
7440-62-2	Vanadium	39.1			P
7440-66-6	Zinc	622			P
	Cyanide	4.2	U		AS

Color Before: BROWN Clarity Before: Texture: MEDIUM

Color After: BROWN Clarity After: Artifacts: 5

Comments:

ENVIROFORMS/INORGANIC CLP

1

INORGANIC ANALYSIS DATA SHEET

SAMPLE NO.

MEHA95

Lab Name: DATACHEM LABORATORIES Contract: 68-D9-0084

Lab Code: DATAC Case No.: 16377 SAS No.: SDG No.: MEHA93

Matrix (soil/water): SOIL Lab Sample ID: CLP7393

Level (low/med): LOW Date Received: 05/09/91

% Solids: 80.2

Concentration Units (ug/L or mg/kg dry weight): MG/KG

CAS No.	Analyte	Concentration	C	Q	M
7429-90-5	Aluminum	10100			P
7440-36-0	Antimony	6.0	U	N	P
7440-38-2	Arsenic	4.5		N	F
7440-39-3	Barium	193		*	P
7440-41-7	Beryllium	0.63	B		P
7440-43-9	Cadmium	4.3			P
7440-70-2	Calcium	4690			P
7440-47-3	Chromium	25.8			P
7440-48-4	Cobalt	6.7	B		P
7440-50-8	Copper	31.1			P
7439-89-6	Iron	17900			P
7439-92-1	Lead	105		*	F
7439-95-4	Magnesium	3060			P
7439-96-5	Manganese	125			P
7439-97-6	Mercury	0.20			CV
7440-02-0	Nickel	21.0			P
7440-09-7	Potassium	1910			P
7782-49-2	Selenium	0.30	B	NW	F
7440-22-4	Silver	1.00	U	N	P
7440-23-5	Sodium	75.0	B		P
7440-28-0	Thallium	0.25	U		F
7440-62-2	Vanadium	23.7			P
7440-66-6	Zinc	333			P
	Cyanide	3.1	U		AS

Color Before: BROWN Clarity Before: Texture: MEDIUM

Color After: BROWN Clarity After: Artifacts:

Comments:

6

FORM I - IN

ENVIROFORMS/INORGANIC CLP

1

INORGANIC ANALYSIS DATA SHEET

SAMPLE NO.

MEHA96

Lab Name: DATACHEM LABORATORIES Contract: 68-D9-0084

Lab Code: DATAC Case No.: 16377 SAS No.: SDG No.: MEHA93

Matrix (soil/water): SOIL Lab Sample ID: CLP7394

Level (low/med): LOW Date Received: 05/09/91

% Solids: 66.9

Concentration Units (ug/L or mg/kg dry weight): MG/KG

CAS No.	Analyte	Concentration	C	Q	M
7429-90-5	Aluminum	11500			P
7440-36-0	Antimony	7.2	U	N	P
7440-38-2	Arsenic	11.9		NS	F
7440-39-3	Barium	223		*	P
7440-41-7	Beryllium	0.75	B		P
7440-43-9	Cadmium	0.90	U		P
7440-70-2	Calcium	16400			P
7440-47-3	Chromium	22.0			P
7440-48-4	Cobalt	9.3	B		P
7440-50-8	Copper	22.1			P
7439-89-6	Iron	35900			P
7439-92-1	Lead	29.5		*	F
7439-95-4	Magnesium	4910			P
7439-96-5	Manganese	411			P
7439-97-6	Mercury	0.15	U		CV
7440-02-0	Nickel	28.8			P
7440-09-7	Potassium	2710			P
7782-49-2	Selenium	0.30	U	NW	F
7440-22-4	Silver	1.2	U	N	P
7440-23-5	Sodium	390	B		P
7440-28-0	Thallium	0.30	U		F
7440-62-2	Vanadium	22.3			P
7440-66-6	Zinc	120			P
	Cyanide	3.7	U		AS

Color Before: BROWN Clarity Before: Texture: MEDIUM

Color After: BROWN Clarity After: Artifacts:

Comments:

7

FORM I - IN

ENVIROFORMS/INORGANIC CLP

1

INORGANIC ANALYSIS DATA SHEET

SAMPLE NO.

MEHA97

Lab Name: DATACHEM LABORATORIES Contract: 68-D9-0084

Lab Code: DATAC Case No.: 16377 SAS No.: SDG No.: MEHA93

Matrix (soil/water): SOIL Lab Sample ID: CLP7395

Level (low/med): LOW Date Received: 05/09/91

% Solids: 49.2

Concentration Units (ug/L or mg/kg dry weight): MG/KG

CAS No.	Analyte	Concentration	C	Q	M
7429-90-5	Aluminum	22300			P
7440-36-0	Antimony	9.8	U	N	P
7440-38-2	Arsenic	7.1		N	F
7440-39-3	Barium	403		*	P
7440-41-7	Beryllium	1.9	B		P
7440-43-9	Cadmium	14.6			P
7440-70-2	Calcium	9930			P
7440-47-3	Chromium	32.0			P
7440-48-4	Cobalt	11.4	B		P
7440-50-8	Copper	91.2			P
7439-89-6	Iron	31900			P
7439-92-1	Lead	109		*	F
7439-95-4	Magnesium	6000			P
7439-96-5	Manganese	479			P
7439-97-6	Mercury	0.20	U		CV
7440-02-0	Nickel	47.7			P
7440-09-7	Potassium	4210			P
7782-49-2	Selenium	0.82	B	NW	F
7440-22-4	Silver	1.6	U	N	P
7440-23-5	Sodium	990	B		P
7440-28-0	Thallium	0.43	B		F
7440-62-2	Vanadium	42.7			P
7440-66-6	Zinc	686			P
	Cyanide	5.1	U		AS

Color Before: BROWN Clarity Before: Texture: MEDIUM

Color After: BROWN Clarity After: Artifacts:

Comments:

8

FORM I - IN

ENVIROFORMS/INORGANIC CLP

1

INORGANIC ANALYSIS DATA SHEET

SAMPLE NO.

MEHA98

Lab Name: DATACHEM LABORATORIES Contract: 68-D9-0084

Lab Code: DATAC Case No.: 16377 SAS No.: SDG No.: MEHA93

Matrix (soil/water): SOIL Lab Sample ID: CLP7396

Level (low/med): LOW Date Received: 05/09/91

% Solids: 45.3

Concentration Units (ug/L or mg/kg dry weight): MG/KG

CAS No.	Analyte	Concentration	C	Q	M
7429-90-5	Aluminum	15600			P
7440-36-0	Antimony	10.6	U	N	P
7440-38-2	Arsenic	5.2		N	F
7440-39-3	Barium	323		*	P
7440-41-7	Beryllium	1.1	B		P
7440-43-9	Cadmium	2.9			P
7440-70-2	Calcium	34100			P
7440-47-3	Chromium	27.6			P
7440-48-4	Cobalt	7.7	B		P
7440-50-8	Copper	34.2			P
7439-89-6	Iron	41000			P
7439-92-1	Lead	66.4		*	F
7439-95-4	Magnesium	5490			P
7439-96-5	Manganese	435			P
7439-97-6	Mercury	0.22	U		CV
7440-02-0	Nickel	32.1			P
7440-09-7	Potassium	3660			P
7782-49-2	Selenium	0.47	B	NW	F
7440-22-4	Silver	1.8	U	N	P
7440-23-5	Sodium	824	B		P
7440-28-0	Thallium	0.44	U		F
7440-62-2	Vanadium	31.7			P
7440-66-6	Zinc	288			P
	Cyanide	5.5	U		AS

Color Before: BROWN Clarity Before: Texture: MEDIUM

Color After: BROWN Clarity After: Artifacts:

Comments:

FORM I - IN

ENVIROFORMS/INORGANIC CLP

1

INORGANIC ANALYSIS DATA SHEET

SAMPLE NO.

MEHA99

Lab Name: DATACHEM LABORATORIES Contract: 68-D9-0084

Lab Code: DATAC Case No.: 16377 SAS No.: SDG No.: MEHA93

Matrix (soil/water): SOIL Lab Sample ID: CLP7397

Level (low/med): LOW Date Received: 05/09/91

% Solids: 59.4

Concentration Units (ug/L or mg/kg dry weight): MG/KG

CAS No.	Analyte	Concentration	C	Q	M
7429-90-5	Aluminum	7650			P
7440-36-0	Antimony	8.1	U	N	P
7440-38-2	Arsenic	5.8		N	F
7440-39-3	Barium	333		*	P
7440-41-7	Beryllium	0.57	B		P
7440-43-9	Cadmium	6.9			P
7440-70-2	Calcium	27300			P
7440-47-3	Chromium	78.2			P
7440-48-4	Cobalt	6.3	B		P
7440-50-8	Copper	54.4			P
7439-89-6	Iron	16700			P
7439-92-1	Lead	284		*	F
7439-95-4	Magnesium	4490			P
7439-96-5	Manganese	255			P
7439-97-6	Mercury	0.17	U		CV
7440-02-0	Nickel	21.1			P
7440-09-7	Potassium	1500	B		P
7782-49-2	Selenium	0.37	B	NW	F
7440-22-4	Silver	1.3	U	N	P
7440-23-5	Sodium	479	B		P
7440-28-0	Thallium	0.34	U		F
7440-62-2	Vanadium	24.7			P
7440-66-6	Zinc	526			P
	Cyanide	4.2	U		AS

Color Before: BROWN Clarity Before: Texture: MEDIUM

Color After: BROWN Clarity After: Artifacts:

Comments:

FORM I - IN

ENVIROFORMS/INORGANIC CLP

1

INORGANIC ANALYSIS DATA SHEET

SAMPLE NO.

MEKN02

Lab Name: DATACHEM LABORATORIES Contract: 68-D9-0084

Lab Code: DATAC Case No.: 16377 SAS No.: SDG No.: MEHA93

Matrix (soil/water): WATER Lab Sample ID: CLP7398

Level (low/med): LOW Date Received: 05/09/91

% Solids: 0.0

Concentration Units (ug/L or mg/kg dry weight): UG/L

CAS No.	Analyte	Concentration	C	Q	M
7429-90-5	Aluminum	58.0	U		P
7440-36-0	Antimony	24.0	U		P
7440-38-2	Arsenic	1.2	B		F
7440-39-3	Barium	464			P
7440-41-7	Beryllium	1.0	U		P
7440-43-9	Cadmium	3.0	U		P
7440-70-2	Calcium	138000			P
7440-47-3	Chromium	6.0	U		P
7440-48-4	Cobalt	5.9	B		P
7440-50-8	Copper	5.0	U		P
7439-89-6	Iron	3650			P
7439-92-1	Lead	2.3	B		F
7439-95-4	Magnesium	68300			P
7439-96-5	Manganese	185			P
7439-97-6	Mercury	0.20	U		CV
7440-02-0	Nickel	13.0	B		P
7440-09-7	Potassium	78000			P
7782-49-2	Selenium	1.0	U	NW	F
7440-22-4	Silver	5.6	B		P
7440-23-5	Sodium	249000			P
7440-28-0	Thallium	1.0	U	NW	F
7440-62-2	Vanadium	4.0	U		P
7440-66-6	Zinc	11.7	B		P
	Cyanide	10.0	U	N	AS

Color Before: YELLOW Clarity Before: CLOUDY Texture:

Color After: YELLOW Clarity After: CLOUDY Artifacts: 11

Comments:

ENVIROFORMS/INORGANIC CLP

1

INORGANIC ANALYSIS DATA SHEET

SAMPLE NO.

MEKN03

Lab Name: DATACHEM LABORATORIES Contract: 68-D9-0084

Lab Code: DATAC Case No.: 16377 SAS No.: SDG No.: MEHA93

Matrix (soil/water): WATER Lab Sample ID: CLP7399

Level (low/med): LOW Date Received: 05/09/91

% Solids: 0.0

Concentration Units (ug/L or mg/kg dry weight): UG/L

CAS No.	Analyte	Concentration	C	Q	M
7429-90-5	Aluminum	58.0	U		P
7440-36-0	Antimony	24.0	U		P
7440-38-2	Arsenic	1.0	U		F
7440-39-3	Barium	1.0	U		P
7440-41-7	Beryllium	1.0	U		P
7440-43-9	Cadmium	3.0	U		P
7440-70-2	Calcium	48.0	U		P
7440-47-3	Chromium	6.0	U		P
7440-48-4	Cobalt	5.0	U		P
7440-50-8	Copper	23.5	B		P
7439-89-6	Iron	19.0	U		P
7439-92-1	Lead	1.0	U		F
7439-95-4	Magnesium	51.0	U		P
7439-96-5	Manganese	1.0	U		P
7439-97-6	Mercury	0.20	U		CV
7440-02-0	Nickel	12.0	U		P
7440-09-7	Potassium	697	U		P
7782-49-2	Selenium	1.0	U	N	F
7440-22-4	Silver	4.0	U		P
7440-23-5	Sodium	102	B		P
7440-28-0	Thallium	1.0	U	N	F
7440-62-2	Vanadium	4.0	U		P
7440-66-6	Zinc	4.0	U		P
	Cyanide	10.0	U	N	AS

Color Before: YELLOW Clarity Before: CLOUDY Texture:

Color After: YELLOW Clarity After: CLEAR Artifacts:

Comments:

FORM I - IN

ENVIROFORMS/INORGANIC CLP

1

INORGANIC ANALYSIS DATA SHEET

SAMPLE NO.

MELP98

Lab Name: DATACHEM LABORATORIES Contract: 68-D9-0084

Lab Code: DATAC Case No.: 16377 SAS No.: SDG No.: MEHA93

Matrix (soil/water): SOIL Lab Sample ID: CLP7400

Level (low/med): LOW Date Received: 05/09/91

% Solids: 78.4

Concentration Units (ug/L or mg/kg dry weight): MG/KG

CAS No.	Analyte	Concentration	C	Q	M
7429-90-5	Aluminum	13100			P
7440-36-0	Antimony	6.1	U	N	P
7440-38-2	Arsenic	9.2		NS	F
7440-39-3	Barium	241		*	P
7440-41-7	Beryllium	1.1	B		P
7440-43-9	Cadmium	3.3			P
7440-70-2	Calcium	13600			P
7440-47-3	Chromium	22.4			P
7440-48-4	Cobalt	9.9	B		P
7440-50-8	Copper	25.2			P
7439-89-6	Iron	21500			P
7439-92-1	Lead	60.1		*	F
7439-95-4	Magnesium	6500			P
7439-96-5	Manganese	605			P
7439-97-6	Mercury	0.13	U		CV
7440-02-0	Nickel	28.8			P
7440-09-7	Potassium	3050			P
7782-49-2	Selenium	0.26	U	NW	F
7440-22-4	Silver	1.0	U	N	P
7440-23-5	Sodium	123	B		P
7440-28-0	Thallium	0.30	B		F
7440-62-2	Vanadium	30.4			P
7440-66-6	Zinc	134			P
	Cyanide	3.2	U		AS

Color Before: BROWN Clarity Before: Texture: MEDIUM

Color After: BROWN Clarity After: Artifacts: 13

Comments:

ENVIROFORMS/INORGANIC CLP

1

INORGANIC ANALYSIS DATA SHEET

SAMPLE NO.

MELP99

Lab Name: DATACHEM LABORATORIES Contract: 68-D9-0084

Lab Code: DATAC Case No.: 16377 SAS No.: SDG No.: MEHA93

Matrix (soil/water): WATER Lab Sample ID: CLP7421

Level (low/med): LOW Date Received: 05/10/91

% Solids: 0.0

Concentration Units (ug/L or mg/kg dry weight): UG/L

CAS No.	Analyte	Concentration	C	Q	M
7429-90-5	Aluminum	58.0	U		P
7440-36-0	Antimony	45.2	B		P
7440-38-2	Arsenic	2.4	B	W	F
7440-39-3	Barium	101	B		P
7440-41-7	Beryllium	1.0	U		P
7440-43-9	Cadmium	3.0	U		P
7440-70-2	Calcium	162000			P
7440-47-3	Chromium	6.0	U		P
7440-48-4	Cobalt	5.0	U		P
7440-50-8	Copper	5.0	U		P
7439-89-6	Iron	20.8	B		P
7439-92-1	Lead	1.0	U		F
7439-95-4	Magnesium	33600			P
7439-96-5	Manganese	335			P
7439-97-6	Mercury	0.20	U		CV
7440-02-0	Nickel	27.7	B		P
7440-09-7	Potassium	4920	B		P
7782-49-2	Selenium	1.5	B	NW	F
7440-22-4	Silver	4.0	U		P
7440-23-5	Sodium	38000			P
7440-28-0	Thallium	1.0	U	NW	F
7440-62-2	Vanadium	4.0	B		P
7440-66-6	Zinc	18.4	B		P
	Cyanide	10.0	U	N	AS

Color Before: YELLOW Clarity Before: CLEAR Texture:

Color After: YELLOW Clarity After: CLEAR Artifacts:

Comments:

14

FORM I - IN

ENVIROFORMS/INORGANIC CLP

1

INORGANIC ANALYSIS DATA SHEET

SAMPLE NO.

MELT91

Lab Name: DATACHEM LABORATORIES Contract: 68-D9-0084

Lab Code: DATAC Case No.: 16377 SAS No.: SDG No.: MEHA93

Matrix (soil/water): WATER Lab Sample ID: CLP7422

Level (low/med): LOW Date Received: 05/10/91

% Solids: 0.0

Concentration Units (ug/L or mg/kg dry weight): UG/L

CAS No.	Analyte	Concentration	C	Q	M
7429-90-5	Aluminum	58.0	U		P
7440-36-0	Antimony	73.4			P
7440-38-2	Arsenic	15.1			F
7440-39-3	Barium	549			P
7440-41-7	Beryllium	1.0	U		P
7440-43-9	Cadmium	3.0	U		P
7440-70-2	Calcium	368000			P
7440-47-3	Chromium	6.0	U		P
7440-48-4	Cobalt	6.7	B		P
7440-50-8	Copper	5.0	U		P
7439-89-6	Iron	39200			P
7439-92-1	Lead	1.4	B		F
7439-95-4	Magnesium	113000			P
7439-96-5	Manganese	2320			P
7439-97-6	Mercury	0.20	U		CV
7440-02-0	Nickel	50.0			P
7440-09-7	Potassium	30100			P
7782-49-2	Selenium	1.0	U	NW	F
7440-22-4	Silver	4.0	U		P
7440-23-5	Sodium	199000			P
7440-28-0	Thallium	1.0	U	NW	F
7440-62-2	Vanadium	4.0	U		P
7440-66-6	Zinc	12.3	B		P
	Cyanide	10.0	U	N	AS

Color Before: YELLOW Clarity Before: CLEAR Texture:

Color After: YELLOW Clarity After: CLEAR Artifacts:

Comments:

FORM I - IN

ENVIROFORMS/INORGANIC CLP

1

INORGANIC ANALYSIS DATA SHEET

SAMPLE NO.

MELT92

Lab Name: DATACHEM LABORATORIES Contract: 68-D9-0084

Lab Code: DATAC Case No.: 16377 SAS No.: SDG No.: MEHA93

Matrix (soil/water): WATER Lab Sample ID: CLP7423

Level (low/med): LOW Date Received: 05/10/91

% Solids: 0.0

Concentration Units (ug/L or mg/kg dry weight): UG/L

CAS No.	Analyte	Concentration	C	Q	M
7429-90-5	Aluminum	58.0	U		P
7440-36-0	Antimony	44.5	B		P
7440-38-2	Arsenic	2.2	B		F
7440-39-3	Barium	235			P
7440-41-7	Beryllium	1.0	U		P
7440-43-9	Cadmium	3.0	U		P
7440-70-2	Calcium	152000			P
7440-47-3	Chromium	6.0	U		P
7440-48-4	Cobalt	5.0	U		P
7440-50-8	Copper	5.0	U		P
7439-89-6	Iron	5600			P
7439-92-1	Lead	1.5	B	W	F
7439-95-4	Magnesium	28800			P
7439-96-5	Manganese	1080			P
7439-97-6	Mercury	0.20	U		CV
7440-02-0	Nickel	12.0	U		P
7440-09-7	Potassium	7350			P
7782-49-2	Selenium	1.0	U	NW	F
7440-22-4	Silver	4.0	U		P
7440-23-5	Sodium	29800			P
7440-28-0	Thallium	1.0	U	NW	F
7440-62-2	Vanadium	4.0	U		P
7440-66-6	Zinc	15.4	B		P
	Cyanide	10.0	U	N	AS

Color Before: YELLOW Clarity Before: CLEAR Texture:

Color After: YELLOW Clarity After: CLEAR Artifacts:

Comments:

FORM I - IN

ENVIROFORMS/INORGANIC CLP

1

INORGANIC ANALYSIS DATA SHEET

SAMPLE NO.

MELT93

Lab Name: DATACHEM LABORATORIES Contract: 68-D9-0084

Lab Code: DATAC Case No.: 16377 SAS No.: SDG No.: MEHA93

Matrix (soil/water): WATER Lab Sample ID: CLP7424

Level (low/med): LOW Date Received: 05/10/91

% Solids: 0.0

Concentration Units (ug/L or mg/kg dry weight): UG/L

CAS No.	Analyte	Concentration	C	Q	M
7429-90-5	Aluminum	58.0	U		P
7440-36-0	Antimony	24.0	U		P
7440-38-2	Arsenic	6.4	B		F
7440-39-3	Barium	50.0	B		P
7440-41-7	Beryllium	1.0	U		P
7440-43-9	Cadmium	3.0	U		P
7440-70-2	Calcium	80400			P
7440-47-3	Chromium	6.0	U		P
7440-48-4	Cobalt	5.0	U		P
7440-50-8	Copper	13.3	B		P
7439-89-6	Iron	24.4	B		P
7439-92-1	Lead	1.3	B		F
7439-95-4	Magnesium	27300			P
7439-96-5	Manganese	4.8	B		P
7439-97-6	Mercury	0.20	U		CV
7440-02-0	Nickel	12.0	U		P
7440-09-7	Potassium	5250			P
7782-49-2	Selenium	1.0	U	N	F
7440-22-4	Silver	4.0	U		P
7440-23-5	Sodium	14900			P
7440-28-0	Thallium	1.0	U	N	F
7440-62-2	Vanadium	4.0	U		P
7440-66-6	Zinc	142			P
	Cyanide	11.6	U	N	AS

Color Before: YELLOW Clarity Before: CLEAR Texture:

Color After: YELLOW Clarity After: CLEAR Artifacts:

Comments:

FORM I - IN

ENVIROFORMS/INORGANIC CLP

1

INORGANIC ANALYSIS DATA SHEET

SAMPLE NO.

MELT96

Lab Name: DATACHEM LABORATORIES Contract: 68-D9-0084

Lab Code: DATAC Case No.: 16377 SAS No.: SDG No.: MEHA93

Matrix (soil/water): WATER Lab Sample ID: CLP7425

Level (low/med): LOW Date Received: 05/10/91

% Solids: 0.0

Concentration Units (ug/L or mg/kg dry weight): UG/L

CAS No.	Analyte	Concentration	C	Q	M
7429-90-5	Aluminum	58.0	U		P
7440-36-0	Antimony	24.0	U		P
7440-38-2	Arsenic	1.0	U		F
7440-39-3	Barium	98.0	B		P
7440-41-7	Beryllium	1.3	B		P
7440-43-9	Cadmium	3.0	U		P
7440-70-2	Calcium	157000			P
7440-47-3	Chromium	6.0	U		P
7440-48-4	Cobalt	5.7	B		P
7440-50-8	Copper	6.1	B		P
7439-89-6	Iron	19.0	U		P
7439-92-1	Lead	1.0	U		F
7439-95-4	Magnesium	31900			P
7439-96-5	Manganese	323			P
7439-97-6	Mercury	0.20	U		CV
7440-02-0	Nickel	22.5	B		P
7440-09-7	Potassium	4470	B		P
7782-49-2	Selenium	1.0	U	N	F
7440-22-4	Silver	4.0	U		P
7440-23-5	Sodium	37100			P
7440-28-0	Thallium	1.0	U	NW	F
7440-62-2	Vanadium	4.0	U		P
7440-66-6	Zinc	22.6			P
	Cyanide	10.0	U	N	AS

Color Before: YELLOW Clarity Before: CLEAR Texture:

Color After: YELLOW Clarity After: CLEAR Artifacts:

Comments:

FORM I - IN

ENVIROFORMS/INORGANIC CLP

1

INORGANIC ANALYSIS DATA SHEET

SAMPLE NO.

MELT97

Lab Name: DATACHEM LABORATORIES Contract: 68-D9-0084

Lab Code: DATAC Case No.: 16377 SAS No.: SDG No.: MEHA93

Matrix (soil/water): WATER Lab Sample ID: CLP7426

Level (low/med): LOW Date Received: 05/10/91

% Solids: 0.0

Concentration Units (ug/L or mg/kg dry weight): UG/L

CAS No.	Analyte	Concentration	C	Q	M
7429-90-5	Aluminum	58.0	U		P
7440-36-0	Antimony	24.0	U		P
7440-38-2	Arsenic	1.0	U		F
7440-39-3	Barium	1.0	U		P
7440-41-7	Beryllium	1.0	U		P
7440-43-9	Cadmium	3.0	U		P
7440-70-2	Calcium	13400			P
7440-47-3	Chromium	6.0	U		P
7440-48-4	Cobalt	5.0	U		P
7440-50-8	Copper	7.1	B		P
7439-89-6	Iron	19.0	U		P
7439-92-1	Lead	1.0	U		F
7439-95-4	Magnesium	3810	B		P
7439-96-5	Manganese	1.8	B		P
7439-97-6	Mercury	0.20	U		CV
7440-02-0	Nickel	12.0	U		P
7440-09-7	Potassium	13000			P
7782-49-2	Selenium	1.0	U	N	F
7440-22-4	Silver	4.0	U		P
7440-23-5	Sodium	3710	B		P
7440-28-0	Thallium	1.0	U	N	F
7440-62-2	Vanadium	4.0	U		P
7440-66-6	Zinc	6.7	B		P
	Cyanide	10.0	U	N	AS

Color Before: COLORLESS Clarity Before: CLEAR Texture:

Color After: COLORLESS Clarity After: CLEAR Artifacts:

Comments:

FORM I - IN

ENVIROFORMS/INORGANIC CLP

1

INORGANIC ANALYSIS DATA SHEET

SAMPLE NO.

MELT98

Lab Name: DATACHEM LABORATORIES Contract: 68-D9-0084

Lab Code: DATAC Case No.: 16377 SAS No.: SDG No.: MEHA93

Matrix (soil/water): WATER Lab Sample ID: CLP7401

Level (low/med): LOW Date Received: 05/10/91

% Solids: 0.0

Concentration Units (ug/L or mg/kg dry weight): UG/L

CAS No.	Analyte	Concentration	C	Q	M
7429-90-5	Aluminum	58.0	U		P
7440-36-0	Antimony	30.2	B		P
7440-38-2	Arsenic	3.3	B	W	F
7440-39-3	Barium	469			P
7440-41-7	Beryllium	1.0	U		P
7440-43-9	Cadmium	3.0	U		P
7440-70-2	Calcium	138000			P
7440-47-3	Chromium	6.0	U		P
7440-48-4	Cobalt	6.3	B		P
7440-50-8	Copper	5.0	U		P
7439-89-6	Iron	4230			P
7439-92-1	Lead	4.1			F
7439-95-4	Magnesium	69800			P
7439-96-5	Manganese	183			P
7439-97-6	Mercury	0.20	U		CV
7440-02-0	Nickel	12.0	U		P
7440-09-7	Potassium	79100			P
7782-49-2	Selenium	1.0	U	NW	F
7440-22-4	Silver	4.0	U		P
7440-23-5	Sodium	253000			P
7440-28-0	Thallium	10.0	U	NW	F
7440-62-2	Vanadium	4.0	U		P
7440-66-6	Zinc	7.1	B		P
	Cyanide	10.0	U	N	AS

Color Before: YELLOW Clarity Before: CLOUDY Texture:

Color After: YELLOW Clarity After: CLEAR Artifacts:

Comments:

20

ENVIROFORMS/INORGANIC CLP

1

INORGANIC ANALYSIS DATA SHEET

SAMPLE NO.

MELT99

Lab Name: DATACHEM LABORATORIES Contract: 68-D9-0084

Lab Code: DATAC Case No.: 16377 SAS No.: SDG No.: MEHA93

Matrix (soil/water): WATER Lab Sample ID: CLP7402

Level (low/med): LOW Date Received: 05/10/91

% Solids: 0.0

Concentration Units (ug/L or mg/kg dry weight): UG/L

CAS No.	Analyte	Concentration	C	Q	M
7429-90-5	Aluminum	14600			P
7440-36-0	Antimony	31.8	B		P
7440-38-2	Arsenic	16.5			F
7440-39-3	Barium	1220			P
7440-41-7	Beryllium	2.1	B		P
7440-43-9	Cadmium	3.0	U		P
7440-70-2	Calcium	138000			P
7440-47-3	Chromium	47.1			P
7440-48-4	Cobalt	13.2	B		P
7440-50-8	Copper	119			P
7439-89-6	Iron	67500			P
7439-92-1	Lead	108			F
7439-95-4	Magnesium	56400			P
7439-96-5	Manganese	609			P
7439-97-6	Mercury	0.53			CV
7440-02-0	Nickel	74.2			P
7440-09-7	Potassium	65100			P
7782-49-2	Selenium	1.0	U	NW	F
7440-22-4	Silver	4.0	U		P
7440-23-5	Sodium	120000			P
7440-28-0	Thallium	1.0	U	NW	F
7440-62-2	Vanadium	26.5	B		P
7440-66-6	Zinc	406			P
	Cyanide	10.0	U	N	AS

Color Before: YELLOW Clarity Before: CLOUDY Texture:

Color After: YELLOW Clarity After: CLEAR Artifacts:

Comments:

FORM I - IN

U.S. EPA - CLP

3
BLANKS

ADDENDUM TO
COF 16377
MEHA93

Lab Name: DATACHEM LABORATORIES Contract: 68-D9-0084

Lab Code: DATAC Case No.: 16377 SAS No.: SDG No.: MEHA93

Preparation Blank Matrix (soil/water): SOIL

Preparation Blank Concentration Units (ug/L or mg/kg): MG/KG

Analyte	Initial Calib. Blank (ug/L)	C	Continuing Calibration Blank (ug/L) 1	C	2	C	3	C	Prepa-ration Blank	C	M
Aluminum	58.0	U	58.0	U	58.0	U	58.0	U	11.600	U	P
Antimony	24.0	U	-24.1	B	24.0	U	24.0	U	4.800	U	P
Arsenic	1.0	U	1.1	B	1.0	U	1.0	U	0.200	U	F
Barium	1.9	B	1.9	B	1.0	U	1.0	U	0.379	B	P
Beryllium	1.0	U	1.0	U	2.1	B	1.0	U	0.200	U	P
Cadmium	3.0	U	3.0	U	3.0	U	3.2	B	0.600	U	P
Calcium	48.0	U	48.0	U	48.0	U	48.0	U	9.600	U	P
Chromium	6.0	U	6.0	U	6.0	U	6.0	U	1.200	U	P
Cobalt	5.0	U	5.0	U	5.0	U	5.0	U	1.000	U	P
Copper	5.0	U	5.0	U	5.0	U	5.1	B	1.000	U	P
Iron	19.0	U	19.0	U	19.0	U	19.0	U	17.120	B	P
Lead	1.0	U	1.0	U	1.0	U	1.0	U	0.200	U	F
Magnesium	51.0	U	51.0	U	51.0	U	51.0	U	10.200	U	P
Manganese	1.0	U	1.0	U	1.5	B	1.2	B	0.200	U	P
Mercury	0.2	U	0.2	U	0.2	U	0.2	U	0.100	U	CV
Nickel	12.0	U	12.0	U	12.0	U	15.9	B	2.400	U	P
Potassium	697.0	U	697.0	U	697.0	U	697.0	U	139.400	U	P
Selenium	1.0	U	1.0	U	1.0	U	1.0	U	0.200	U	F
Silver	4.0	U	4.0	U	4.0	U	4.0	U	0.800	U	P
Sodium	40.0	U	40.0	U	40.0	U	40.0	U	8.000	U	P
Thallium	1.0	U	1.0	U	1.0	U	1.0	U	0.200	U	F
Vanadium	4.0	U	4.0	U	4.0	U	4.0	U	0.800	U	P
Zinc	4.0	U	4.0	U	4.0	U	4.0	U	0.800	U	P
Cyanide	20.0	U	20.0	U	20.0	U	20.0	U	2.500	U	AS

ENVIROFORMS/INORGANIC CLP

3
BLANKS

Lab Name: DATACHEM LABORATORIES Contract: 68-D9-0084

Lab Code: DATAC Case No.: 16377 SAS No.: SDG No.: MEHA93

Preparation Blank Matrix (soil/water): WATER

Preparation Blank Concentration Units (ug/L or mg/kg): UG/L

Analyte	Initial Calib. Blank (ug/L)	C	Continuing Calibration Blank (ug/L) 1	C	2	C	3	C	Prepa-ration Blank	C	M
Aluminum			58.0	U	58.0	U			58.0	U	P
Antimony			24.0	U	24.0	U			24.0	U	P
Arsenic			1.0	U					1.0	U	F
Barium			-1.3	B	-1.3	B			1.9	B	P
Beryllium			1.1	B	1.7	B			1.0	U	P
Cadmium			3.0	U	3.0	U			3.0	U	P
Calcium			48.0	U	48.0	U			48.0	U	P
Chromium			6.0	U	6.0	U			6.0	U	P
Cobalt			5.0	U	5.0	U			5.0	U	P
Copper			5.0	U	5.0	U			5.0	U	P
Iron			19.0	U	19.0	U			19.0	U	P
Lead			1.0	U	1.0	U	1.0	U	1.0	U	F
Magnesium			51.0	U	51.0	U			51.0	U	P
Manganese			1.0	U	1.5	B			1.0	U	P
Mercury									0.2	U	CV
Nickel			12.0	U	12.0	U			12.0	U	P
Potassium			697.0	U	697.0	U			697.0	U	P
Selenium			1.0	U	1.0	U			1.0	U	F
Silver			4.0	U	4.0	U			4.0	U	P
Sodium			40.0	U	40.0	U			46.9	B	P
Thallium			1.0	U	1.0	U	1.0	U	1.0	U	F
Vanadium			4.0	U	4.0	U			4.0	B	P
Zinc			4.0	U	4.0	U			4.0	U	P
Cyanide			20.0	U					10.0	U	AS

FORM III - IN

ENVIROFORMS/INORGANIC CLP

3
BLANKS

Lab Name: DATACHEM LABORATORIES Contract: 68-D9-0084

Lab Code: DATAC Case No.: 16377 SAS No.: SDG No.: MEHA93

Preparation Blank Matrix (soil/water): WATER

Preparation Blank Concentration Units (ug/L or mg/kg): UG/L

Analyte	Initial Calib. Blank (ug/L)	C	Continuing Calibration Blank (ug/L) 1	C	2	C	3	C	Prepa-ration Blank	C	M
Aluminum											NR
Antimony											NR
Arsenic	1.0	U	1.0	U	-1.0	B					F
Barium											NR
Beryllium											NR
Cadmium											NR
Calcium											NR
Chromium											NR
Cobalt											NR
Copper											NR
Iron											NR
Lead			1.0	U	1.0	U					F
Magnesium											NR
Manganese											NR
Mercury											NR
Nickel											NR
Potassium											NR
Selenium	1.0	U	1.0	U	1.0	U	1.0	U			F
Silver											NR
Sodium											NR
Thallium			1.0	U	1.0	U					F
Vanadium											NR
Zinc											NR
Cyanide											NR

FORM III - IN

ENVIROFORMS/INORGANIC CLP

3
BLANKS

Lab Name: DATACHEM LABORATORIES Contract: 68-D9-0084

Lab Code: DATAC Case No.: 16377 SAS No.: SDG No.: MEHA93

Preparation Blank Matrix (soil/water): WATER

Preparation Blank Concentration Units (ug/L or mg/kg): UG/L

Analyte	Initial Calib. Blank (ug/L)	C	Continuing Calibration Blank (ug/L) 1	C	2	C	3	C	Prepa-ration Blank	C	M
Aluminum											NR
Antimony											NR
Arsenic	1.4	B	1.3	B	1.0	U	2.5	B			F
Barium											NR
Beryllium											NR
Cadmium											NR
Calcium											NR
Chromium											NR
Cobalt											NR
Copper											NR
Iron											NR
Lead	1.0	U	1.0	U	1.0	U					F
Magnesium											NR
Manganese											NR
Mercury											NR
Nickel											NR
Potassium											NR
Selenium			1.0	U	1.0	U					F
Silver											NR
Sodium											NR
Thallium											NR
Vanadium											NR
Zinc											NR
Cyanide											NR

ENVIROFORMS/INORGANIC CLP

3
BLANKS

Lab Name: DATACHEM LABORATORIES Contract: 68-D9-0084

Lab Code: DATAC Case No.: 16377 SAS No.: SDG No.: MEHA93

Preparation Blank Matrix (soil/water): WATER

Preparation Blank Concentration Units (ug/L or mg/kg): UG/L

Analyte	Initial Calib. Blank (ug/L)	C	Continuing Calibration Blank (ug/L) 1	C	2	C	3	C	Prepa-ration Blank	C	M
Aluminum											NR
Antimony											NR
Arsenic			2.3	B	2.1	B	1.0	U			F
Barium											NR
Beryllium											NR
Cadmium											NR
Calcium											NR
Chromium											NR
Cobalt											NR
Copper											NR
Iron											NR
Lead	-1.0	B	-1.1	B	-1.1	B	-1.5	B			F
Magnesium											NR
Manganese											NR
Mercury											NR
Nickel											NR
Potassium											NR
Selenium											NR
Silver											NR
Sodium											NR
Thallium											NR
Vanadium											NR
Zinc											NR
Cyanide											NR

FORM III - IN

ENVIROFORMS/INORGANIC CLP

3
BLANKS

Lab Name: DATACHEM LABORATORIES Contract: 68-D9-0084

Lab Code: DATAC Case No.: 16377 SAS No.: SDG No.: MEHA93

Preparation Blank Matrix (soil/water): WATER

Preparation Blank Concentration Units (ug/L or mg/kg): UG/L

Analyte	Initial Calib. Blank (ug/L)	C	Continuing Calibration Blank (ug/L) 1	C	2	C	3	C	Prepa-ration Blank	C	M
Aluminum											NR
Antimony											NR
Arsenic			1.0	U							F
Barium											NR
Beryllium											NR
Cadmium											NR
Calcium											NR
Chromium											NR
Cobalt											NR
Copper											NR
Iron											NR
Lead											NR
Magnesium											NR
Manganese											NR
Mercury											NR
Nickel											NR
Potassium											NR
Selenium											NR
Silver											NR
Sodium											NR
Thallium											NR
Vanadium											NR
Zinc											NR
Cyanide											NR

FORM III - IN

ENVIROFORMS/INORGANIC CLP

5A
SPIKE SAMPLE RECOVERY

SAMPLE NO.

MEHA95S

Lab Name: DATACHEM LABORATORIES Contract: 68-D9-0084

Lab Code: DATAC Case No.: 16377 SAS No.: SDG No.: MEHA93

Matrix (soil/water): SOIL Level (low/med): LOW
% Solids for Sample: 80.2

Concentration Units (ug/L or mg/kg dry weight): MG/KG

Analyte	Control Limit %R	Spiked Sample Result (SSR)	C	Sample Result (SR)	C	Spike Added (SA)	%R	Q	M
Aluminum									NR
Antimony									NR
Arsenic									NR
Barium									NR
Beryllium									NR
Cadmium									NR
Calcium									NR
Chromium									NR
Cobalt									NR
Copper									NR
Iron									NR
Lead									NR
Magnesium									NR
Manganese									NR
Mercury	75-125	0.8178		0.2042		0.62	99.0		CV
Nickel									NR
Potassium									NR
Selenium									NR
Silver									NR
Sodium									NR
Thallium									NR
Vanadium									NR
Zinc									NR
Cyanide									NR

Comments:

FORM V (PART 1) - IN

ENVIROFORMS/INORGANIC CLP

5A
SPIKE SAMPLE RECOVERY

SAMPLE NO.

MEHA96S

Lab Name: DATACHEM LABORATORIES Contract: 68-D9-0084

Lab Code: DATAC Case No.: 16377 SAS No.: SDG No.: MEHA93

Matrix (soil/water): SOIL Level (low/med): LOW
% Solids for Sample: 66.9

Concentration Units (ug/L or mg/kg dry weight): MG/KG

Analyte	Control Limit %R	Spiked Sample Result (SSR)	C	Sample Result (SR)	C	Spike Added (SA)	%R	Q	M
Aluminum									NR
Antimony									NR
Arsenic	75-125	18.1405		11.8571		11.96	52.5	N	F
Barium									NR
Beryllium									NR
Cadmium									NR
Calcium									NR
Chromium									NR
Cobalt									NR
Copper									NR
Iron									NR
Lead		29.8924		29.5067		5.98	6.4		F
Magnesium									NR
Manganese									NR
Mercury									NR
Nickel									NR
Potassium									NR
Selenium	75-125	2.1973		0.2990	U	2.99	73.5	N	F
Silver									NR
Sodium									NR
Thallium	75-125	14.6039		0.2990	U	14.95	97.7		F
Vanadium									NR
Zinc									NR
Cyanide									NR

Comments:

ENVIROFORMS/INORGANIC CLP

5A
SPIKE SAMPLE RECOVERY

SAMPLE NO.

MELP98S

Lab Name: DATACHEM LABORATORIES Contract: 68-D9-0084

Lab Code: DATAC Case No.: 16377 SAS No.: SDG No.: MEHA93

Matrix (soil/water): SOIL Level (low/med): LOW
% Solids for Sample: 78.4

Concentration Units (ug/L or mg/kg dry weight): MG/KG

Analyte	Control Limit %R	Spiked Sample Result (SSR)	C	Sample Result (SR)	C	Spike Added (SA)	%R	Q	M
Aluminum									NR
Antimony	75-125	65.6363		6.1224	U	127.55	51.5	N	P
Arsenic									NR
Barium	75-125	764.6286		240.8419		510.20	102.7		P
Beryllium	75-125	14.3744		1.0727	B	12.76	104.2		P
Cadmium	75-125	18.7589		3.3037		12.76	121.1		P
Calcium									NR
Chromium	75-125	73.6993		22.3872		51.02	100.6		P
Cobalt	75-125	136.2975		9.9123	B	127.55	99.1		P
Copper	75-125	88.1869		25.2393		63.78	98.7		P
Iron									NR
Lead									NR
Magnesium									NR
Manganese		757.4164		605.3639		127.55	119.2		P
Mercury									NR
Nickel	75-125	160.5229		28.8388		127.55	103.2		P
Potassium									NR
Selenium									NR
Silver	75-125	18.0858		1.0204	U	12.76	141.7	N	P
Sodium									NR
Thallium									NR
Vanadium	75-125	149.1762		30.4158		127.55	93.1		P
Zinc	75-125	268.0142		133.9127		127.55	105.1		P
Cyanide	75-125	14.2060		3.1888	U	15.94	89.1		AS

Comments:

FORM V (PART 1) - IN

ENVIROFORMS/INORGANIC CLP

5A
SPIKE SAMPLE RECOVERY

SAMPLE NO.

MELP99S

Lab Name: DATACHEM LABORATORIES Contract: 68-D9-0084

Lab Code: DATAC Case No.: 16377 SAS No.: SDG No.: MEHA93

Matrix (soil/water): WATER Level (low/med): LOW
% Solids for Sample: 0.0

Concentration Units (ug/L or mg/kg dry weight): UG/L

Analyte	Control Limit %R	Spiked Sample Result (SSR)	C	Sample Result (SR)	C	Spike Added (SA)	%R	Q	M
Aluminum									NR
Antimony									NR
Arsenic	75-125	35.3900		2.4200	B	40.00	82.4		F
Barium									NR
Beryllium									NR
Cadmium									NR
Calcium									NR
Chromium									NR
Cobalt									NR
Copper									NR
Iron									NR
Lead	75-125	16.4200		1.0000	U	20.00	82.1		F
Magnesium									NR
Manganese									NR
Mercury									NR
Nickel									NR
Potassium									NR
Selenium	75-125	8.2300		1.5200	B	10.00	67.1	N	F
Silver									NR
Sodium									NR
Thallium	75-125	33.2300		1.0000	U	50.00	66.5	N	F
Vanadium									NR
Zinc									NR
Cyanide									NR

Comments:

ENVIROFORMS/INORGANIC CLP

5A
SPIKE SAMPLE RECOVERY

SAMPLE NO.

MELT91S

Lab Name: DATACHEM LABORATORIES Contract: 68-D9-0084

Lab Code: DATAC Case No.: 16377 SAS No.: SDG No.: MEHA93

Matrix (soil/water): WATER Level (low/med): LOW
% Solids for Sample: 0.0

Concentration Units (ug/L or mg/kg dry weight): UG/L

Analyte	Control Limit %R	Spiked Sample Result (SSR)	C	Sample Result (SR)	C	Spike Added (SA)	%R	Q	M
Aluminum	75-125	1928.7498		58.0000	U	2000.00	96.4		P
Antimony	75-125	544.2572		73.4408		500.00	94.2		P
Arsenic									NR
Barium	75-125	2486.1936		548.8807		2000.00	96.9		P
Beryllium	75-125	51.0211		1.0000	U	50.00	102.0		P
Cadmium	75-125	46.5118		3.0000	U	50.00	93.0		P
Calcium									NR
Chromium	75-125	193.5921		6.0000	U	200.00	96.8		P
Cobalt	75-125	472.5853		6.6689	B	500.00	93.2		P
Copper	75-125	237.7974		5.0000	U	250.00	95.1		P
Iron		40235.6170		39214.7500		1000.00	102.1		P
Lead									NR
Magnesium									NR
Manganese		2771.3813		2317.7944		500.00	90.7		P
Mercury									NR
Nickel	75-125	506.9589		50.0108		500.00	91.4		P
Potassium									NR
Selenium									NR
Silver	75-125	47.3534		4.0000	U	50.00	94.7		P
Sodium									NR
Thallium									NR
Vanadium	75-125	472.1541		4.0000	U	500.00	94.4		P
Zinc	75-125	477.6552		12.3136	B	500.00	93.1		P
Cyanide	75-125	30.0000		10.0000	U	50.00	60.0	N	AS

Comments:

ENVIROFORMS/INORGANIC CLP

5A
SPIKE SAMPLE RECOVERY

SAMPLE NO.

MELT93S

Lab Name: DATACHEM LABORATORIES Contract: 68-D9-0084

Lab Code: DATAC Case No.: 16377 SAS No.: SDG No.: MEHA93

Matrix (soil/water): WATER Level (low/med): LOW
% Solids for Sample: 0.0

Concentration Units (ug/L or mg/kg dry weight): UG/L

Analyte	Control Limit %R	Spiked Sample Result (SSR)	C	Sample Result (SR)	C	Spike Added (SA)	%R	Q	M
Aluminum									NR
Antimony									NR
Arsenic									NR
Barium									NR
Beryllium									NR
Cadmium									NR
Calcium									NR
Chromium									NR
Cobalt									NR
Copper									NR
Iron									NR
Lead									NR
Magnesium									NR
Manganese									NR
Mercury	75-125	1.0104		0.2000	U	1.00	101.0		CV
Nickel									NR
Potassium									NR
Selenium									NR
Silver									NR
Sodium									NR
Thallium									NR
Vanadium									NR
Zinc									NR
Cyanide									NR

Comments:

ENVIROFORMS/INORGANIC CLP

5B
POST DIGEST SPIKE SAMPLE RECOVERY

SAMPLE NO.

MELP98A

Lab Name: DATACHEM LABORATORIES Contract: 68-D9-0084

Lab Code: DATAC Case No.: 16377 SAS No.: SDG No.: MEHA93

Matrix (soil/water): SOIL Level (low/med): LOW

Concentration Units: ug/L

Analyte	Control Limit %R	Spiked Sample Result (SSR)	C	Sample Result (SR)		Spike Added (SA)	%R	Q	M
Aluminum									NR
Antimony		146.16		24.00	U	120.0	121.8		P
Arsenic									NR
Barium									NR
Beryllium									NR
Cadmium									NR
Calcium									NR
Chromium									NR
Cobalt									NR
Copper									NR
Iron									NR
Lead									NR
Magnesium									NR
Manganese									NR
Mercury									NR
Nickel									NR
Potassium									NR
Selenium									NR
Silver									NR
Sodium									NR
Thallium									NR
Vanadium									NR
Zinc									NR
Cyanide									NR

Comments:

44A

ENVIROFORMS/INORGANIC CLP

5B
POST DIGEST SPIKE SAMPLE RECOVERY

SAMPLE NO.

MELT91A

Lab Name: DATACHEM LABORATORIES Contract: 68-D9-0084

Lab Code: DATAC Case No.: 16377 SAS No.: SDG No.: MEHA93

Matrix (soil/water): WATER Level (low/med): LOW

Concentration Units: ug/L

Analyte	Control Limit %R	Spiked Sample Result (SSR)	C	Sample Result (SR)		Spike Added (SA)	%R	Q	M
Aluminum									NR
Antimony									NR
Arsenic									NR
Barium									NR
Beryllium									NR
Cadmium									NR
Calcium									NR
Chromium									NR
Cobalt									NR
Copper									NR
Iron									NR
Lead									NR
Magnesium									NR
Manganese									NR
Mercury									NR
Nickel									NR
Potassium									NR
Selenium									NR
Silver									NR
Sodium									NR
Thallium									NR
Vanadium									NR
Zinc									NR
Cyanide		25.50		20.00	U	40.0	63.8		AS

Comments:

FORM V (PART 2) - IN

ENVIROFORMS/INORGANIC CLP

6
DUPLICATES

SAMPLE NO.

MEHA95D

Lab Name: DATACHEM LABORATORIES Contract: 68-D9-0084

Lab Code: DATAC Case No.: 16377 SAS No.: SDG No.: MEHA93

Matrix (soil/water): SOIL Level (low/med): LOW

% Solids for Sample: 80.2 % Solids for Duplicate: 0.0

Concentration Units (ug/L or mg/kg dry weight): MG/KG

Analyte	Control Limit	Sample (S)	C	Duplicate (D)	C	RPD	Q	M
Aluminum								NR
Antimony								NR
Arsenic								NR
Barium								NR
Beryllium								NR
Cadmium								NR
Calcium								NR
Chromium								NR
Cobalt								NR
Copper								NR
Iron								NR
Lead								NR
Magnesium								NR
Manganese								NR
Mercury	0.1	0.2042		0.1541		28.0		CV
Nickel								NR
Potassium								NR
Selenium								NR
Silver								NR
Sodium								NR
Thallium								NR
Vanadium								NR
Zinc								NR
Cyanide								NR

FORM VI - IN

ENVIROFORMS/INORGANIC CLP

6
DUPLICATES

SAMPLE NO.

MEHA96D

Lab Name: DATACHEM LABORATORIES Contract: 68-D9-0084

Lab Code: DATAC Case No.: 16377 SAS No.: SDG No.: MEHA93

Matrix (soil/water): SOIL Level (low/med): LOW

% Solids for Sample: 66.9 % Solids for Duplicate: 67.2

Concentration Units (ug/L or mg/kg dry weight): MG/KG

Analyte	Control Limit	Sample (S)	C	Duplicate (D)	C	RPD	Q	M
Aluminum								NR
Antimony								NR
Arsenic	3.0	11.8571		9.5127		21.9		F
Barium								NR
Beryllium								NR
Cadmium								NR
Calcium								NR
Chromium								NR
Cobalt								NR
Copper								NR
Iron								NR
Lead		29.5067		66.0845		76.5	*	F
Magnesium								NR
Manganese								NR
Mercury								NR
Nickel								NR
Potassium								NR
Selenium		0.2990	U	0.2990	U			F
Silver								NR
Sodium								NR
Thallium		0.2990	U	0.2990	U			F
Vanadium								NR
Zinc								NR
Cyanide								NR

FORM VI - IN

ENVIROFORMS/INORGANIC CLP

6
DUPLICATES

SAMPLE NO.

MELP98D

Lab Name: DATACHEM LABORATORIES Contract: 68-D9-0084

Lab Code: DATAC Case No.: 16377 SAS No.: SDG No.: MEHA93

Matrix (soil/water): SOIL Level (low/med): LOW

% Solids for Sample: 78.4 % Solids for Duplicate: 78.4

Concentration Units (ug/L or mg/kg dry weight): MG/KG

Analyte	Control Limit	Sample (S)	C	Duplicate (D)	C	RPD	Q	M
Aluminum		13121.2950		11604.5220		12.3		P
Antimony		6.1224	U	6.1224	U			P
Arsenic								NR
Barium	51.0	240.8419		293.4303		19.7	*	P
Beryllium		1.0727	B	1.1800	B	9.5		P
Cadmium	1.3	3.3037		4.0040		19.2		P
Calcium		13630.8310		13575.0670		0.4		P
Chromium		22.3872		19.8991		11.8		P
Cobalt		9.9123	B	9.9857	B	0.7		P
Copper	6.4	25.2393		26.5523		5.1		P
Iron		21531.4290		20505.1890		4.9		P
Lead								NR
Magnesium	1275.5	6499.6368		6371.0619		2.0		P
Manganese		605.3639		648.2089		6.8		P
Mercury								NR
Nickel	10.2	28.8388		24.9690		14.4		P
Potassium	1275.5	3049.7138		2670.0051		13.3		P
Selenium								NR
Silver		1.0204	U	1.0204	U			P
Sodium		122.6793	B	100.5942	B	19.8		P
Thallium								NR
Vanadium	12.8	30.4158		24.9431		19.8		P
Zinc		133.9127		143.2522		6.7		P
Cyanide		3.1888	U	3.1888	U			AS

FORM VI - IN

ENVIROFORMS/INORGANIC CLP

6
DUPLICATES

SAMPLE NO.

MELP99D

Lab Name: DATACHEM LABORATORIES Contract: 68-D9-0084

Lab Code: DATAC Case No.: 16377 SAS No.: SDG No.: MEHA93

Matrix (soil/water): WATER Level (low/med): LOW

% Solids for Sample: 0.0 % Solids for Duplicate:

Concentration Units (ug/L or mg/kg dry weight): UG/L

Analyte	Control Limit	Sample (S)	C	Duplicate (D)	C	RPD	Q	M
Aluminum								NR
Antimony								NR
Arsenic		2.4200	B	1.0000	U	200.0		F
Barium								NR
Beryllium								NR
Cadmium								NR
Calcium								NR
Chromium								NR
Cobalt								NR
Copper								NR
Iron								NR
Lead		1.0000	U	1.0600	B	200.0		F
Magnesium								NR
Manganese								NR
Mercury								NR
Nickel								NR
Potassium								NR
Selenium		1.5200	B	1.0000	U	200.0		F
Silver								NR
Sodium								NR
Thallium		1.0000	U	1.0000	U			F
Vanadium								NR
Zinc								NR
Cyanide								NR

FORM VI - IN

ENVIROFORMS/INORGANIC CLP

6
DUPLICATES

SAMPLE NO.

MELT91D

Lab Name: DATACHEM LABORATORIES Contract: 68-D9-0084

Lab Code: DATAC Case No.: 16377 SAS No.: SDG No.: MEHA93

Matrix (soil/water): WATER Level (low/med): LOW

% Solids for Sample: 0.0 % Solids for Duplicate:

Concentration Units (ug/L or mg/kg dry weight): UG/L

Analyte	Control Limit	Sample (S)	C	Duplicate (D)	C	RPD	Q	M
Aluminum		58.0000	U	58.0000	U			P
Antimony	60.0	73.4408		63.5714		14.4		P
Arsenic								NR
Barium	200.0	548.8807		536.8661		2.2		P
Beryllium		1.0000	U	1.0000	U			P
Cadmium		3.0000	U	3.0000	U			P
Calcium		368338.8700		361966.3100		1.7		P
Chromium		6.0000	U	6.0000	U			P
Cobalt		6.6689	B	9.0895	B	30.7		P
Copper		5.0000	U	5.0000	U			P
Iron		39214.7500		38415.3430		2.1		P
Lead								NR
Magnesium		113427.4600		110529.4300		2.6		P
Manganese		2317.7944		2266.2070		2.3		P
Mercury								NR
Nickel	40.0	50.0108		33.8931	B	38.4		P
Potassium		30103.0890		30036.9600		0.2		P
Selenium								NR
Silver		4.0000	U	4.0000	U			P
Sodium		199079.4600		194188.0600		2.5		P
Thallium								NR
Vanadium		4.0000	U	4.0000	U			P
Zinc	20.0	12.3136	B	28.9102		80.5		P
Cyanide								NR

FORM VI - IN

ENVIROFORMS/INORGANIC CLP

6
DUPLICATES

SAMPLE NO.

MELT92D

Lab Name: DATACHEM LABORATORIES Contract: 68-D9-0084

Lab Code: DATAC Case No.: 16377 SAS No.: SDG No.: MEHA93

Matrix (soil/water): WATER Level (low/med): LOW

% Solids for Sample: 0.0 % Solids for Duplicate:

Concentration Units (ug/L or mg/kg dry weight): UG/L

Analyte	Control Limit	Sample (S)	C	Duplicate (D)	C	RPD	Q	M
Aluminum								NR
Antimony								NR
Arsenic								NR
Barium								NR
Beryllium								NR
Cadmium								NR
Calcium								NR
Chromium								NR
Cobalt								NR
Copper								NR
Iron								NR
Lead								NR
Magnesium								NR
Manganese								NR
Mercury		0.2000	U	0.2000	U			CV
Nickel								NR
Potassium								NR
Selenium								NR
Silver								NR
Sodium								NR
Thallium								NR
Vanadium								NR
Zinc								NR
Cyanide		10.0000	U	11.6279	U			AS

FORM VI - IN

ENVIROFORMS/INORGANIC CLP

10
INSTRUMENT DETECTION LIMITS (QUARTERLY)

Lab Name: DATACHEM LABORATORIES Contract: 68-D9-0084

Lab Code: DATAC Case No.: 16377 SAS No.: SDG No.: MEHA93

ICP ID Number: ICP-B Date: 04/12/91

Flame AA ID Number:

Furnace AA ID Number:

Analyte	Wave-length (nm)	Back-ground	CRDL (ug/L)	IDL (ug/L)	M
Aluminum	308.20		200.0	58.0	P
Antimony	206.80		60.0	24.0	P
Arsenic					NR
Barium	493.40		200.0	1.0	P
Beryllium	313.00		5.0	1.0	P
Cadmium	223.80		5.0	3.0	P
Calcium	315.80		5000.0	48.0	P
Chromium	267.70		10.0	6.0	P
Cobalt	228.60		50.0	5.0	P
Copper	327.40		25.0	5.0	P
Iron	259.90		100.0	19.0	P
Lead			3.0		NR
Magnesium	279.00		5000.0	51.0	P
Manganese	257.60		15.0	1.0	P
Mercury					NR
Nickel	231.60		40.0	12.0	P
Potassium	766.40		5000.0	697.0	P
Selenium					NR
Silver	328.00		10.0	4.0	P
Sodium	588.90		5000.0	40.0	P
Thallium					NR
Vanadium	292.40		50.0	4.0	P
Zinc	213.80		20.0	4.0	P

Comments:

FORM X - IN

ENVIROFORMS/INORGANIC CLP

10
INSTRUMENT DETECTION LIMITS (QUARTERLY)

Lab Name: DATACHEM LABORATORIES Contract: 68-D9-0084

Lab Code: DATAC Case No.: 16377 SAS No.: SDG No.: MEHA93

ICP ID Number: Date: 04/14/91

Flame AA ID Number:

Furnace AA ID Number: AAS-ZEB

Analyte	Wave-length (nm)	Back-ground	CRDL (ug/L)	IDL (ug/L)	M
Aluminum			200.0		NR
Antimony			60.0		NR
Arsenic	193.70	BZ	10.0	1.0	F
Barium			200.0		NR
Beryllium			5.0		NR
Cadmium			5.0		NR
Calcium			5000.0		NR
Chromium			10.0		NR
Cobalt			50.0		NR
Copper			25.0		NR
Iron			100.0		NR
Lead			3.0		NR
Magnesium			5000.0		NR
Manganese			15.0		NR
Mercury			0.2		NR
Nickel			40.0		NR
Potassium			5000.0		NR
Selenium			5.0		NR
Silver			10.0		NR
Sodium			5000.0		NR
Thallium	276.80	BZ	10.0	1.0	F
Vanadium			50.0		NR
Zinc			20.0		NR

Comments:

FORM X - IN

ENVIROFORMS/INORGANIC CLP

10
INSTRUMENT DETECTION LIMITS (QUARTERLY)

Lab Name: DATACHEM LABORATORIES Contract: 68-D9-0084

Lab Code: DATAC Case No.: 16377 SAS No.: SDG No.: MEHA93

ICP ID Number: Date: 04/14/91

Flame AA ID Number:

Furnace AA ID Number: AAS-ZEC

Analyte	Wave-length (nm)	Back-ground	CRDL (ug/L)	IDL (ug/L)	M
Aluminum			200.0		NR
Antimony			60.0		NR
Arsenic			10.0		NR
Barium			200.0		NR
Beryllium			5.0		NR
Cadmium			5.0		NR
Calcium			5000.0		NR
Chromium			10.0		NR
Cobalt			50.0		NR
Copper			25.0		NR
Iron			100.0		NR
Lead	283.30	BZ	3.0	1.0	F
Magnesium			5000.0		NR
Manganese			15.0		NR
Mercury			0.2		NR
Nickel			40.0		NR
Potassium			5000.0		NR
Selenium	196.00	BZ	5.0	1.0	F
Silver			10.0		NR
Sodium			5000.0		NR
Thallium			10.0		NR
Vanadium			50.0		NR
Zinc			20.0		NR

Comments:

FORM X - IN

ENVIROFORMS/INORGANIC CLP

10
INSTRUMENT DETECTION LIMITS (QUARTERLY)

Lab Name: DATACHEM LABORATORIES Contract: 68-D9-0084

Lab Code: DATAC Case No.: 16377 SAS No.: SDG No.: MEHA93

ICP ID Number: Date: 04/14/91

Flame AA ID Number: AAS-CVB

Furnace AA ID Number:

Analyte	Wave-length (nm)	Back-ground	CRDL (ug/L)	IDL (ug/L)	M
Aluminum			200.0		NR
Antimony			60.0		NR
Arsenic			10.0		NR
Barium			200.0		NR
Beryllium			5.0		NR
Cadmium			5.0		NR
Calcium			5000.0		NR
Chromium			10.0		NR
Cobalt			50.0		NR
Copper			25.0		NR
Iron			100.0		NR
Lead			3.0		NR
Magnesium			5000.0		NR
Manganese			15.0		NR
Mercury	253.70		0.2	0.2	CV
Nickel			40.0		NR
Potassium			5000.0		NR
Selenium			5.0		NR
Silver			10.0		NR
Sodium			5000.0		NR
Thallium			10.0		NR
Vanadium			50.0		NR
Zinc			20.0		NR

Comments:

FORM X - IN

111 WEST JACKSON BLVD., CHICAGO, ILLINOIS 60604, TEL. 312-663-9415
International Specialists in the Environment

CRL Receipt Date 6-21-91 FIT Receipt Date 9-30 Review Completed 9-30

TO:

FROM: Kaminski

SUBJECT: Metro Disposal

PAN: FIL0417SB (1 hour charged for review) Case # 16377

Sample Description

Organics (VOA, ABN, Pest/PCB)		Inorganics (Metals, Cyanide)	
# 8	Low Soil	#	Low Soil
11	Low Water		Low Water
	Drinking Water		Drinking Water
	Other		Other

Project Data Status yes Completed!!

Incomplete, awaiting

FIT Data Review Findings:

Check Data Sheets for Transcription Errors

Compounds were detected in sample(s); see enclosed sheet.

Book No. Page No. Date Sampled

0759:2

recycled paper

Table 4-2
RESULTS OF CHEMICAL ANALYSIS OF
FIT-COLLECTED Illegible SAMPLES

Metro Disposal 9-30-91 Kamsky

Sample Collection Information and Parameters	LW2	MSD LW 2	(LW1) Dup.	BLANK	MW3 5	MW4 6	Dup Sample Number 7 (MW1)	Blank 8	MW1	MW2	LW1 11	12
Date		5/8/91	5/8/91	5/8/91	5/9/91	5/9/91	5/9/91	5/9/91	5/9/91	5/9/91	5/8/91	
Time		1600	1645	1630	1230	1200	1130	1300	1130	1020	1645	
CRL Log Number												
CLP Organic Traffic Report Number	EHM01	EHM02	EHM03	EHM 04	EHW91	EHW 92	EHW94	ESW 99	EKX 66	EMN 98	EKF57	
CLP Inorganic Traffic Report Number	MELT99	MELT99	MEKN02	MEKN03	MELT92	MELT93	MELT96	FMELT97	MELP99	MELT91	MELT93	
Temperature (°C)	N/A	N/A	N/A	N/A	15°C	15°C	13°C	18°C	13°C	14°C	NA	
Specific Conductivity (µmhos/cm)	N/A	N/A	N/A	N/A	1326	799	1334	8.13	1334	4520	NA	
pH	N/A	N/A	N/A	N/A	6.6	7.09	6.08	6.71	6.08	6.27	NA	

Physical State*	Waste Characteristics**	Category***	SI Memo	Compound Detected (values in ug/L or ug/kg) Volatile Organics	LW2	MSD LW 2	(LW1) Dup.	BLANK	MW3 5	MW4 6	Dup (MW1) 7	Blank 8	MW1	MW2	LW1 11	12
Gas	A,D,G,I	OCC	HH	chloromethane											NR	
Gas	A,D,G,I	OCC	HH	bromomethane												
Gas	A,D,G,I	OCC	HH	vinyl chloride												
Gas	A,D,G,I	OCC	HH	chloroethane												
Liquid	A,D,H,I	SOL	HH,CLA	methylene chloride	4100 B	1300 D	12000 B									
Liquid	E,H,I,A	SOL	K,CLA	acetone	6400 J	2600 BD										
Liquid	A,H,I	SOL	SH	carbon disulfide												
Liquid	A,D,G,I	SOL	HH	1,1-dichloroethene												
Liquid	A,D,H,G	SOL	HH	1,1-dichloroethane												
Liquid	A,D,G	SOL	HH	1,1-dichloroethene (total)												
Liquid	A,D	SOL	HH	cis-1,2-dichloroethane												
Liquid	A,D	SOL	HH	trans-1,2-dichloroethane												
Liquid	A,D,G	SOL	HH	1,2-dichloroethene (total)												
Liquid	A,D	SOL	HH	chloroform								4 J				
Liquid	A,D,G	SOL	HH	1,2-dichloroethane												
Liquid	A,E,G	SOL	K,CLA	2-butanone (MEK)	3400	4100 JD										
Liquid	A,D	SOL	HH	1,1,1-trichloroethane			1200 J									
Liquid	A,D	SOL	HH	carbon tetrachloride												
Liquid	A,D,G	SOL	HYD	vinyl acetate												
Liquid	A,D	OCC	HH	bromodichloromethane								3 J				
Liquid	A,D,G	SOL	HH	1,2-dichloropropane												
Liquid	A,D,G	SOL	HH	cis-1,3-dichloropropene												
Liquid	A,D,G,B	SOL	HH	trichloroethene												
Liquid	A,D	OCC	HH	dibromochloromethane								2 J				
Liquid	A,D	SOL	HH	1,1,2-trichloroethane												
Liquid	A,G	SOL	A	benzene			6500							10		
Liquid	A,D,G	SOL	HH	trans-1,3-dichloropropene												
Liquid	A,D	SOL	HH,CLA	bromoform												
Liquid	A,E,G	SOL	K,CLA	4-methyl-2-pentanone	10000 J	6600 DJ										
Liquid	A,E,G	SOL	K	2-hexanone												
Liquid	A,D	SOL	HH	tetrachloroethene												
Liquid	A,D	SOL	HH	1,2-dibromoethane												
Liquid	A,G,E	SOL	A,CLA	toluene	1800	1200 D										
Liquid	A,D,E	SOL	HH	1,1,2,2-tetrachloroethane												
Liquid	A,D,G	SOL	HA	chlorobenzene			140000							120		
Liquid	A,G	SOL	A	ethylbenzene												
Liquid	A,D,G	OCC	A	styrene												
Liquid	A,G	SOL	A	xylenes (total)												
Liquid	A,D	SOL	HH	1,2-dibromo-3-chloropropane												

Table 4-2 (Cont.)

				Sample Collection Information and Parameters	Sample Number 1 01	2	3	4	5 91	6 92	7 94	8 99	9	10 98	11 57	12
				Semivolatile Organics		R	R	R					R		NR	
S, thick 1	A,B,E	OCC	P	phenol												
Liquid	A,D,B	OCC	HH	bis(2-chloroethyl)ether												
Liquid	A,D,B	OCC	P	2-chlorophenol												
Liquid	A,D,H	SOL	HA	1,3-dichlorobenzene												
Solid	A,D,H	OCC	HA	1,4-dichlorobenzene												
Liquid	A,D,H	SOL	A	benzyl alcohol												
Liquid	A,D,H	OCC	HA	1,2-dichlorobenzene												
Liquid	A,B	OCC	P	2-methylphenol												
Liquid	A,D	OCC	HH	2,2' oxybis(1-chloropropane)												
Liquid	A,D	OCC	HH	bis(2-chloroisopropyl)ether												
Liquid	A,B	OCC	P	4-methylphenol												
Liquid	A	OCC	N-Amino	N-nitroso-di-N-dipropylamine												
Solid	A,D	OCC	HH	hexachloroethane												
Liquid	A,D	OCC	NA	nitrobenzene												
Liquid	A,D	OCC	H	isophorone												
Solid	A,D	OCC	P	2-nitrophenol												
Solid	A,B	OCC	P	2,4-dimethylphenol												
Solid	A	OCC	A	benzoic acid												
Liquid	A,D	OCC	HH	bis(2-chloroethoxy)methane												
Liquid	A,D	OCC	P	2,4-dichlorophenol												
Liquid	A,D	OCC	HA	1,2,4-trichlorobenzene												
Solid	A	OCC	PAH	naphthalene												
Solid	A,D	OCC	HH	4-chloroaniline												
Liquid	A,D,B	OCC	HH	hexachlorobutadiene												
Solid	A,D	OCC	P	4-chloro-3-methylphenol												
Liquid	A,D	OCC	PAH	2-methylnaphthalene												
Liquid	A,D,B	OCC	HH	hexachlorocyclopentadiene												
Solid	A,D	OCC	P	2,4,6-trichlorophenol												
Solid	A,D	OCC	P	2,4,5-trichlorophenol												
Liquid	A,D	OCC	PAH	2-chloronaphthalene												
Solid	A,D	OCC	NH	2-nitroaniline												
Liquid	A,D	OCC	PH,CLA	dimethylphthalate												
Solid	A,D	OCC	PAH	acenaphthylene												
Solid	A,D	OCC	NA	2,6-dinitrotoluene												
Solid	A,D	OCC	NH	3-nitroaniline												
Solid	A,D	OCC	PAH	acenaphthene												
Solid	A,D,G	OCC	P	2,4-dinitrophenol												
Solid	A,D	OCC	P	4-nitrophenol												
Solid	A,D	OCC	A	dibenzofuran												
Solid	A,D	OCC	NA	2,6-dinitrotoluene												
olid	A,D	OCC	NA	2,4-dinitrotoluene												
uid	A,D	OCC	PH	diethylphthalate												
d	A,D	OCC	HH	4-chlorophenyl-phenylether												
	A,D	OCC	PAH	fluorene												
	A,D,E	OCC	NH	4-nitroaniline												
	A,D	OCC	P	4,6-dinitro-2-methylphenol												
	A,D	OCC	NH	N-nitrosodiphenylamine												
iquid	A,D	OCC	HH	4-bromophenyl-phenylether												
Solid	A,D	OCC	HA	hexachlorobenzene												
Solid	A,D	OCC	P	pentachlorophenol												

Table 4-2 (Cont.)

				Sample Collection Information and Parameters	Sample Number 1	2	3	4	5	6	7	8	9	10	11	12
					01	02	03	04							57	
				Semivolatile Organics, Cont.		R	R	R					R			
Solid	A,D	OCC	PAH	phenanthrene												
Solid	A,D	OCC	PAH	anthracene												
Solid	A,D	OCC	PAH	carbazole												
Liquid	A,D	OCC	PH,CLA	di-n-butylphthalate												
Solid	A,D	OCC	PAH	fluoranthene												
Solid	A,D	OCC	PAH	pyrene												
Liquid	A,D	OCC	PH,CLA	butylbenzylphthalate												
Solid	A,D	OCC	HA	3,3'-dichlorobenzidine												
Solid	A,D	OCC	PAH	benzo[a]anthracene												
Solid	A,D	OCC	PAH	chrysene												
Liquid	A,D	OCC	PH,CLA	bis(2-ethylhexyl)phthalate												
Liquid	A,D	OCC	PH,CLA	di-n-octylphthalate												
Solid	A,D	OCC	PAH	benzo[b]fluoranthene												
Solid	A,D	OCC	PAH	benzo[k]fluoranthene												
Solid	A,D,K,L	OCC	PAH	benzo[a]pyrene												
Solid	A,D	OCC	PAH	indeno[1,2,3-cd]pyrene												
Solid	A,D	OCC	PAH	dibenzo[a,h]anthracene												
Solid	A,D	OCC	PAH	benzo[g,h,i]perylene												
				Pesticides/PCBs												
Solid	A,D	PSD	PEST	alpha BHC												
Solid	A,D	PSD	PEST	beta BHC												
Solid	A,D	PSD	PEST	delta BHC												
Solid	A,D	PSD	PEST	gamma BHC (Lindane)												
Solid	A,D	PSD	PEST	Heptachlor												
Solid	A,D	PSD	PEST	Aldrin												
Solid	A,D	PSD	PEST	Heptachlor epoxide												
Solid	A,D	PSD	PEST	Endosulfan I												
Solid	A,D,E	PSD	PEST	Dieldrin												
Solid	A,D	PSD	PEST	4,4'-DDE												
Solid	A,D	PSD	PEST	Endrin												
Solid	A,D	PSD	PEST	Endosulfan II												
Solid	A,D	PSD	PEST	4,4'-DDD												
Solid	A,D	PSD	PEST	Endosulfan sulfate												
Solid	A,D	PSD	PEST	4,4'-DDT												
Solid	A,D	PSD	PEST	Methoxychlor (Mariate)												
Solid	A,D	PSD	PEST	Endrin ketone												
Solid	A,D	PSD	PEST	Endrin aldehyde												
Solid	A,D	PSD	PEST	alpha Chlordane												
Solid	A,D	PSD	PEST	gamma Chlordane												
Solid	A,D	PSD	PEST	Toxaphene												
Liquid	A,D	OCC	PCB	Aroclor 1016												
Liquid	A,D	OCC	PCB	Aroclor 1221												
Liquid	A,D	OCC	PCB	Aroclor 1232												
Liquid	A,D	OCC	PCB	Aroclor 1242			36								130	
Liquid	A,D	OCC	PCB	Aroclor 1248												
Liquid	A,D	OCC	PCB	Aroclor 1254												
Liquid	A,D	OCC	PCB	Aroclor 1260												

Table 4- 1
RESULTS OF CHEMICAL ANALYSIS OF
FIT-COLLECTED 8 soil SAMPLES

9-30-91

Metro Resp Kamesky

Physical State*	Waste Characteristics**	Category***	SI Memo	Sample Collection Information and Parameters	S7	S6	S8	S1	S2	S3	S4	S5	9	10	11	12
				Date	5/8/91	5/8/91	5/8/91	5/8/91	5/8/91	5/8/91	5/8/91	5/8/91				
				Time												
				CRL Log Number												
				CLP Organic Traffic Report Number	EHW89	EHW 88	EHW90	ES387	ES388	ES389	ES390	ES391				
				CLP Inorganic Traffic Report Number	MEHA99	MEHA98	MELD98	MEHA93	MEHA94	MEHA95	MEHA96	MEHA97				
				~~Temperature (°C)~~	N/A	N/A	N/A	N/A	N/A	N/A	N/A	N/A				
				~~Specific Conductivity (µmhos/cm)~~	N/A	N/A	N/A	N/A	N/A	N/A	N/A	N/A				
				~~pH~~	N/A	N/A	N/A	N/A	N/A	N/A	N/A	N/A				
				Compound Detected (values in µg/L or µg/kg)												
				Volatile Organics												
Gas	A,D,G,I	OCC	HH	chloromethane												
Gas	A,D,G,I	OCC	HH	bromomethane												
Gas	A,D,G,I	OCC	HH	vinyl chloride												
Gas	A,D,G,I	OCC	HH	chloroethane												
Liquid	A,D,H,I	SOL	HH,CLA	methylene chloride	680 D	—	—	—	150 J	—	—	—				
Liquid	E,H,I,A	SOL	K,CLA	acetone	1,100 D	350	—	120	52	30	—	230				
Liquid	A,H,I	SOL	SH	carbon disulfide	—	6 J	4 J	5 J	—	3 J	—	—				
Liquid	A,D,G,I	SOL	HH	1,1-dichloroethene												
Liquid	A,D,H,G	SOL	HH	1,1-dichloroethane												
Liquid	A,D,G	SOL	HH	1,1-dichloroethene (total)												
Liquid	A,D	SOL	HH	cis-1,2-dichloroethane												
Liquid	A,D	SOL	HH	trans-1,2-dichloroethane												
Liquid	A,D,G	SOL	HH	1,2-dichloroethene (total)												
Liquid	A,D	SOL	HH	chloroform												
Liquid	A,D,G	SOL	HH	1,2-dichloroethane												
Liquid	A,E,G	SOL	K,CLA	2-butanone (MEK)	430 D	—	—	—	—	—	—	—				
Liquid	A,D	SOL	HH	1,1,1-trichloroethane												
Liquid	A,D	SOL	HH	carbon tetrachloride												
Liquid	A,D,G	SOL	HYD	vinyl acetate												
Liquid	A,D	OCC	HH	bromodichloromethane												
Liquid	A,D,G	SOL	HH	1,2-dichloropropane												
Liquid	A,D,G	SOL	HH	cis-1,3-dichloropropene												
Liquid	A,D,G,B	SOL	HH	trichloroethene												
Liquid	A,D	OCC	HH	dibromochloromethane												
Liquid	A,D	SOL	HH	1,1,2-trichloroethane												
Liquid	A,G	SOL	A	benzene	—	—	—	—	—	—	—	7 J				
Liquid	A,D,G	SOL	HH	trans-1,3-dichloropropene												
Liquid	A,D	SOL	HH,CLA	bromoform												
Liquid	A,E,G	SOL	K,CLA	4-methyl-2-pentanone												
Liquid	A,E,G	SOL	K	2-hexanone												
Liquid	A,D	SOL	HH	tetrachloroethene												
Liquid	A,D	SOL	HH	1,2-dibromoethane												
Liquid	A,G,E	SOL	A,CLA	toluene	—	4 J	2 J	2 J	—	—	—	4 J				
Liquid	A,D,E	SOL	HH	1,1,2,2-tetrachloroethane												
Liquid	A,D,G	SOL	HA	chlorobenzene	—	100	—	—	—	—	—	2500 E				
Liquid	A,G	SOL	A	ethylbenzene												
Liquid	A,D,G	OCC	A	styrene												
Liquid	A,G	SOL	A	xylenes (total)												
Liquid	A,D	SOL	HH	1,2-dibromo-3-chloropropane												

Table 4-1 (Cont.)

				Sample Collection Information and Parameters	S7	S6	S8	S1	S2	S3	S4	S5	9	10	11	12
					Sample Number											
				Semivolatile Organics												
S, thick 1	A,B,E	OCC	P	phenol												
Liquid	A,D,B	OCC	HH	bis(2-chloroethyl)ether												
Liquid	A,D,B	OCC	P	2-chlorophenol												
Liquid	A,D,H	SOL	HA	1,3-dichlorobenzene												
Solid	A,D,H	OCC	HA	1,4-dichlorobenzene												
Liquid	A,D,H	SOL	A	benzyl alcohol												
Liquid	A,D,H	OCC	HA	1,2-dichlorobenzene												
Liquid	A,B	OCC	P	2-methylphenol												
Liquid	A,D	OCC	HH	2,2' oxybis(1-chloropropane)												
Liquid	A,D	OCC	HH	bis(2-chloroisopropyl)ether												
Liquid	A,B	OCC	P	4-methylphenol												
Liquid	A	OCC	H-Amine	N-nitroso-di-N-dipropylamine												
Solid	A,D	OCC	HH	hexachloroethane												
Liquid	A,D	OCC	NA	nitrobenzene												
Liquid	A,D	OCC	H	isophorone												
Solid	A,D	OCC	P	2-nitrophenol												
Solid	A,B	OCC	P	2,4-dimethylphenol												
Solid	A	OCC	A	benzoic acid												
Liquid	A,D	OCC	HH	bis(2-chloroethoxy)methane												
Liquid	A,D	OCC	P	2,4-dichlorophenol												
Liquid	A,D	OCC	HA	1,2,4-trichlorobenzene												
Solid	A	OCC	PAH	naphthalene												
Solid	A,D	OCC	HH	4-chloroaniline												
Liquid	A,D,B	OCC	HH	hexachlorobutadiene												
Solid	A,D	OCC	P	4-chloro-3-methylphenol												
Liquid	A,D	OCC	PAH	2-methylnaphthalene												
Liquid	A,D,B	OCC	HH	hexachlorocyclopentadiene												
Solid	A,D	OCC	P	2,4,6-trichlorophenol												
Solid	A,D	OCC	P	2,4,5-trichlorophenol												
Liquid	A,D	OCC	PAH	2-chloronaphthalene												
Solid	A,D	OCC	NH	2-nitroaniline												
Liquid	A,D	OCC	PH,CLA	dimethylphthalate												
Solid	A,D	OCC	PAH	acenaphthylene												
Solid	A,D	OCC	NA	2,6-dinitrotoluene												
Solid	A,D	OCC	NH	3-nitroaniline												
Solid	A,D	OCC	PAH	acenaphthene												
Solid	A,D,G	OCC	P	2,4-dinitrophenol												
Solid	A,D	OCC	P	4-nitrophenol												
Solid	A,D	OCC	A	dibenzofuran												
Solid	A,D	OCC	NA	2,6-dinitrotoluene												
Solid	A,D	OCC	NA	2,4-dinitrotoluene												
Liquid	A,D	OCC	PH	diethylphthalate												
Liquid	A,D	OCC	HH	4-chlorophenyl-phenylether												
Solid	A,D	OCC	PAH	fluorene												
Solid	A,D,E	OCC	NH	4-nitroaniline												
Solid	A,D	OCC	P	4,6-dinitro-2-methylphenol												
Solid	A,D	OCC	NH	N-nitrosodiphenylamine												
Liquid	A,D	OCC	HH	4-bromophenyl-phenylether												
Solid	A,D	OCC	HA	hexachlorobenzene												
Solid	A,D	OCC	P	pentachlorophenol												

Table 4-1 (Cont.)

				Sample Collection Information and Parameters	S7	S6	S8	S1	S2	S3	S4	S5	9	10	11	12
					Sample Number											
				Semivolatile Organics, Cont.												
Solid	A,D	OCC	PAH	phenanthrene												
Solid	A,D	OCC	PAH	anthracene												
Solid	A,D	OCC	PAH	carbazole												
Liquid	A,D	OCC	PH,CLA	di-n-butylphthalate												
Solid	A,D	OCC	PAH	fluoranthene	1,200 S	–	–	–	–	–	–	–				
Solid	A,D	OCC	PAH	pyrene	970 S	–	–	–	–	–	–	–				
Liquid	A,D	OCC	PH,CLA	butylbenzylphthalate												
Solid	A,D	OCC	HA	3,3'-dichlorobenzidine												
Solid	A,D	OCC	PAH	benzo[a]anthracene												
Solid	A,D	OCC	PAH	chrysene												
Liquid	A,D	OCC	PH,CLA	bis(2-ethylhexyl)phthalate												
Liquid	A,D	OCC	PH,CLA	di-n-octylphthalate												
Solid	A,D	OCC	PAH	benzo[b]fluoranthene												
Solid	A,D	OCC	PAH	benzo[k]fluoranthene												
Solid	A,D,K,L	OCC	PAH	benzo[a]pyrene												
Solid	A,D	OCC	PAH	indeno[1,2,3-cd]pyrene												
Solid	A,D	OCC	PAH	dibenzo[a,h]anthracene												
Solid	A,D	OCC	PAH	benzo[g,h,i]perylene												
				Pesticides/PCBs												
Solid	A,D	PSD	PEST	alpha BHC												
Solid	A,D	PSD	PEST	beta BHC												
Solid	A,D	PSD	PEST	delta BHC												
Solid	A,D	PSD	PEST	gamma BHC (Lindane)												
Solid	A,D	PSD	PEST	Heptachlor												
Solid	A,D	PSD	PEST	Aldrin												
Solid	A,D	PSD	PEST	Heptachlor epoxide												
Solid	A,D	PSD	PEST	Endosulfan I												
Solid	A,D,E	PSD	PEST	Dieldrin	–	–	–	–	–	44	–	–				
Solid	A,D	PSD	PEST	4,4'-DDE												
Solid	A,D	PSD	PEST	Endrin												
Solid	A,D	PSD	PEST	Endosulfan II												
Solid	A,D	PSD	PEST	4,4'-DDD												
Solid	A,D	PSD	PEST	Endosulfan sulfate												
Solid	A,D	PSD	PEST	4,4'-DDT												
Solid	A,D	PSD	PEST	Methoxychlor (Mariate)												
Solid	A,D	PSD	PEST	Endrin ketone												
Solid	A,D	PSD	PEST	Endrin aldehyde												
Solid	A,D	PSD	PEST	alpha Chlordane												
Solid	A,D	PSD	PEST	gamma Chlordane												
Solid	A,D	PSD	PEST	Toxaphene												
Liquid	A,D	OCC	PCB	Aroclor 1016												
Liquid	A,D	OCC	PCB	Aroclor 1221												
Liquid	A,D	OCC	PCB	Aroclor 1232												
Liquid	A,D	OCC	PCB	Aroclor 1242												
Liquid	A,D	OCC	PCB	Aroclor 1248												
Liquid	A,D	OCC	PCB	Aroclor 1254												
Liquid	A,D	OCC	PCB	Aroclor 1260												

UNITED STATES ENVIRONMENTAL PROTECTION AGENCY
REGION V

DATE: 9/26/91

SUBJECT: Review of Region V CLP Data Received for Review on June 21, 1991

FROM: Charles T. Elly, Director(5SCRL) Patrick J. Chunilla for
Central Regional Laboratory

TO: Data User: FIT

We have reviewed the data for the following case(s).

SITE NAME: Metro Disposal System (IL) SMO Case No. 16377

EPA Data Set No. _____ No. of Samples 19 DU/Activity Numbers TFA, 102

CRL No. 91FB40S12 - S25, D20, D22 91FB04R59, R60

SMO Traffic No. EHM01-04, EHW88-92, ES387-391, E~~H3~~JW94 DM, EKF57, EKX66, EMN98, EJW9

CLP Laboratory: PEI Hrs. for Review 21

Following are our findings:

Supplemental Data Review is provided by D. Payne 9-22-91

( ) Data are acceptable for use.
(✓) Data are acceptable for use with qualifications.
( ) Data are preliminary - pending verification by laboratory.
(X) Data are unacceptable, at present for semi-volatiles EHM02, EHM03, EHM04, & EKX-66

cc: Elenor McLean, Sample Mgmt.Office
Edward Kantor, EMSL-Las Vegas

D. Payne
9-23-91

UNITED STATES ENVIRONMENTAL PROTECTION AGENCY

REGION 5
230 SOUTH DEARBORN ST.
CHICAGO, ILLINOIS 60604

REPLY TO THE ATTENTION OF:

FIT Inspection Date: 5/8-9/91

CERCLIS Site Name: Metro DSPL SYST, Inc.

Site Address: Route 3, Fairmont City IL 61841

Recipient Information: Mr T.P. Pendergast
Name
Director - Environmental Affairs /Conrail
Title
Room 606, Six Penn Center
Street Address
Philadelphia, PA 19103
City State Zip Code
(215) 977-1685
Telephone Number

Ecology and Environment, Inc. has been retained by the United States Environmental Protection Agency (U.S. EPA) under contract 68-01-7347 for the purpose of evaluating sites under the Comprehensive Environmental Response Compensation and Liability Act (CERCLA), and the Superfund Amendments and Reauthorization Act (SARA).

A copy of the report regarding the inspection conducted at the above-referenced property will be forwarded by the U.S. EPA within 6 months. If a copy of the inspection report is not received within 6 months of the inspection date noted above, a written request may be sent to the U.S. EPA representative indicated below.

It is essential to include the U.S. EPA Identification Number listed below to ensure that your request is properly referenced.

U.S. EPA Identification Number ILD980607204

Address requests to:

William Messenger, Chief
Pre-Remedial Unit (5HR11)
United States Environmental Protection Agency
230 South Dearborn Street
Chicago, Illinois 60604
(312) 353-1057

Distribution:
White: FIT Site File; TDD No.: F05-8912-090; PAN: F1L0417
Yellow: Recipient
Pink: U.S. EPA

UNITED STATES ENVIRONMENTAL PROTECTION AGENCY

REGION 5
230 SOUTH DEARBORN ST.
CHICAGO, ILLINOIS 60604

REPLY TO THE ATTENTION OF:

FIT Inspection Date: 5/8-9/91

CERCLIS Site Name: Metro DSPL SYST, Inc.

Site Address: Route 3, Fairmont City IL 61841

Recipient Information: Mr T.P. Pendergast
Name
Director - Environmental Affairs /Conrail
Title
Room 606, Six Penn Center
Street Address
Philadelphia, PA 19103
City State Zip Code
(215) 977-1685
Telephone Number

Ecology and Environment, Inc. has been retained by the United States Environmental Protection Agency (U.S. EPA) under contract 68-01-7347 for the purpose of evaluating sites under the Comprehensive Environmental Response Compensation and Liability Act (CERCLA), and the Superfund Amendments and Reauthorization Act (SARA).

A copy of the report regarding the inspection conducted at the above-referenced property will be forwarded by the U.S. EPA within 6 months. If a copy of the inspection report is not received within 6 months of the inspection date noted above, a written request may be sent to the U.S. EPA representative indicated below.

It is essential to include the U.S. EPA Identification Number listed below to ensure that your request is properly referenced.

U.S. EPA Identification Number ILD980607204

Address requests to:

William Messenger, Chief
Pre-Remedial Unit (5HR11)
United States Environmental Protection Agency
230 South Dearborn Street
Chicago, Illinois 60604
(312) 353-1057

Distribution:
White: FIT Site File; TDD No.: FCS-8912-090; PAN: FIL0417
Yellow: Recipient
Pink: U.S. EPA

RECEIPT FOR SAMPLES

U.S. EPA, 230 S. Dearborn St., Chicago, IL 60604

U. S. EPA ID NO ILD980607204

PROJ. ACCT. NO. FIL0417

TDD F05-8912-090

SPLIT SAMPLES ACCEPTED( ) DECLINED(X)

FACILITY/OCCUPANT NAME: Metro Disposal Systems, Inc

FACILITY/OCCUPANT ADDRESS: Route 3, Fairmont City, IL

SAMPLE NUMBER	DATE	TIME	SPLIT SAMPLES (✓)	OTR#	ITR#	DESCRIPTION OF SAMPLE LOCATIONS	SEMIVOLATILES	PESTICIDES/PCBS	VOLATILES	METALS	CYANIDE			MATRIX
S1	5/8/91	12:30		ES387	MEHA93	S1	X	X	X	X	X			soil/sediment
S2	5/8/91	12:45		ES388	MEHA94	S2	X	X	X	X	X			soil/sediment
S3	5/8/91	12:50		ES389	MEHA95	S3	X	X	X	X	X			soil/sediment
S4	5/8/91	13:00		ES390	MEHA96	S4	X	X	X	X	X			soil/sediment
S5	5/8/91	13:20		ES391	MEHA97	S5	X	X	X	X	X			soil/sediment
S6	5/8/91	15:03		EHW88	MEHA98	S6	X	X	X	X	X			soil/sediment
S7	5/8/91	15:00		EHW89	MEHA99	S7	X	X	X	X	X			soil/sediment
S8	5/8/91	13:45		EHW90	MELP98	S8	X	X	X	X	X			soil/sediment
LW1	5/8/91	16:45		EKF57	MELT98	LW1	X	X	X	X	X			leachate
LW2	5/8/91	16:00		EHM101	MELT99	LW2	X	X	X	X	X			leachate
MW1	5/9/91	11:30		EKX66	MELP99	MW1	X	X	X	X	X			groundwater
MW2	5/9/91	10:20		EMN98	MELT91	MW2	X	X	X	X	X			groundwater
MW3	5/9/91	12:30		EHW91	MELT92	MW3	X	X	X	X	X			groundwater
MW4	5/9/91	12:00		EHW92	MELT93	MW4	X	X	X	X	X			groundwater

TRANSFERRED BY: J. Rodiy (Signature) 5/13/91 (Date) 16:00 (Time)

RECEIVED BY: (Signature) (Date) (Time)

TITLE TELEPHONE

DISTRIBUTION
WHITE: FIT SITE FILE
YELLOW: FACILITY/OCCUPANT
GREEN: FIT SAMPLE MANAGEMENT
PINK: U.S. EPA

RECEIPT FOR SAMPLES

U.S. EPA, 230 S. Dearborn St., Chicago, IL 60604

U. S. EPA ID NO ILD980607204

PROJ. ACCT. NO. FIL0417

TDD F05-8912-090

FACILITY/OCCUPANT NAME Metro Disposal Systems, Inc

FACILITY/OCCUPANT ADDRESS Route 3 Fairmont City, IL

SPLIT SAMPLES ACCEPTED( ) DECLINED(X)

SAMPLE NUMBER	DATE	TIME	SPLIT SAMPLES (✓)	OTR*	ITR*	DESCRIPTION OF SAMPLE LOCATIONS	SEMIVOLATILES	PESTICIDES/PCBS	VOLATILES	METALS	CYANIDE			MATRIX
S1	5/8/91	12:30		ES387	MEHA93	S1	X	X	X	X	X			soil/sediment
S2	5/8/91	12:45		ES388	MEHA94	S2	X	X	X	X	X			soil/sediment
S3	5/8/91	12:50		ES389	MEHA95	S3	X	X	X	X	X			soil/sediment
S4	5/8/91	13:00		ES390	MEHA96	S4	X	X	X	X	X			soil/sediment
S5	5/8/91	13:20		ES391	MEHA97	S5	X	X	X	X	X			soil/sediment
S6	5/8/91	15:03		EHW88	MEHA98	S6	X	X	X	X	X			soil/sediment
S7	5/8/91	15:00		EHW89	MEHA99	S7	X	X	X	X	X			soil/sediment
S8	5/8/91	13:45		EHW90	MELP98	S8	X	X	X	X	X			soil/sediment
LW1	5/8/91	16:45		EKF57	MELT98	LW1	X	X	X	X	X			leachate
LW2	5/8/91	16:00		EHM101	MELT99	LW2	X	X	X	X	X			leachate
MW1	5/9/91	11:30		EKX66	MELP99	MW1	X	X	X	X	X			groundwater
MW2	5/9/91	10:20		EHN98	MELT91	MW2	X	X	X	X	X			groundwater
MW3	5/9/91	12:30		EHW91	MELT92	MW3	X	X	X	X	X			groundwater
MW4	5/9/91	12:00		EHW92	MELT93	MW4	X	X	X	X	X			groundwater

TRANSFERRED BY

J. Rodiy (Signature) 5/13/91 (Date) 16:00 (Time)

RECEIVED BY: (Signature) (Date) (Time)

TITLE TELEPHONE

DISTRIBUTION
WHITE: FIT SITE FILE
YELLOW: FACILITY/OCCUPANT
GREEN: FIT SAMPLE MANAGEMENT
PINK: U.S. EPA

recycled paper
ecology and environment

SAMPLE DESCRIPTION

SITE NAME/TDD# Metro Disp. Syst. Inc / F05-8912-090

CASE NUMBER 16377

SAMPLE #/STATION LOCATION S1

SAMPLING DATE 5/8/91 SAMPLING TIME 12:30.

ORGANIC TRAFFIC NUMBER ES 387

INORGANIC TRAFFIC NUMBER ME HA 93

BOTTLE	ANALYSIS	TAG NUMBERS	LOT NUMBER
8 oz	Extractables	163051	1052032
120ml	VOA	163053, -54	W0318043
8 oz	Metals / CN-	163052	1052032

PHYSICAL DESCRIPTION AT TIME OF COLLECTION: dark brown wet sediment

PHYSICAL CHANGES FROM TIME OF COLLECTION UNTIL SHIPMENT: None

INSTRUMENT READINGS N/A

pH

CONDUCTIVITY

TEMPERATURE

SAMPLE DESCRIPTION

SITE NAME/TDD# Metro Dspl Syst Inc / F05-8912-090

CASE NUMBER 16377

SAMPLE #/STATION LOCATION S2

SAMPLING DATE 5/8/91 SAMPLING TIME 12:45

ORGANIC TRAFFIC NUMBER ES388

INORGANIC TRAFFIC NUMBER MEH A94

BOTTLE	ANALYSIS	TAG NUMBERS	LOT NUMBER
8 oz	Extractables	163055	1052032
120ml	VOA	163057,-58	W0318043
8 oz	Metals / CN-	163056	1052032

PHYSICAL DESCRIPTION AT TIME OF COLLECTION: dark brown sediment

PHYSICAL CHANGES FROM TIME OF COLLECTION UNTIL SHIPMENT: None

INSTRUMENT READINGS N/A

pH

CONDUCTIVITY

TEMPERATURE

SAMPLE DESCRIPTION

SITE NAME/TDD# Metro Disp. Syst. Inc / F05-8912-090

CASE NUMBER 16377

SAMPLE #/STATION LOCATION S3

SAMPLING DATE 5/8/91 SAMPLING TIME 12:50

ORGANIC TRAFFIC NUMBER ES 389

INORGANIC TRAFFIC NUMBER MEHA 95

BOTTLE	ANALYSIS	TAG NUMBERS	LOT NUMBER
8 oz	Extractables	163059	1052032
120ml	VOA	163061,-62	W0318043
8 oz	Metals / CN^-	163060	1052032

PHYSICAL DESCRIPTION AT TIME OF COLLECTION: dark moist organic soil with pebbles

PHYSICAL CHANGES FROM TIME OF COLLECTION UNTIL SHIPMENT: None

INSTRUMENT READINGS N/A

pH

CONDUCTIVITY

TEMPERATURE

SAMPLE DESCRIPTION

SITE NAME/TDD# Metro Dspl Syst, Inc /F05-8912-040

CASE NUMBER 16377

SAMPLE #/STATION LOCATION S4

SAMPLING DATE 5/8/91 SAMPLING TIME 1100

ORGANIC TRAFFIC NUMBER ES390

INORGANIC TRAFFIC NUMBER MEHA96

BOTTLE	ANALYSIS	TAG NUMBERS	LOT NUMBER
8 oz	Extractables	163063	1052032
120ml	VOA	163065,-66	W0318043
8 oz	Metals/CN	163064	1052032

PHYSICAL DESCRIPTION AT TIME OF COLLECTION: dark moist organic soil

PHYSICAL CHANGES FROM TIME OF COLLECTION UNTIL SHIPMENT: None

INSTRUMENT READINGS N/A

pH

CONDUCTIVITY

TEMPERATURE

SAMPLE DESCRIPTION

SITE NAME/TDD# Metro Disp1 Syst Inc /F05-8912-040

CASE NUMBER 16377

SAMPLE #/STATION LOCATION S5

SAMPLING DATE 5/8/91 SAMPLING TIME 13:20

ORGANIC TRAFFIC NUMBER ES391

INORGANIC TRAFFIC NUMBER MEHA 97

BOTTLE	ANALYSIS	TAG NUMBERS	LOT NUMBER
8oz	Extractable	163067	1052032
120ml	VOA	163069,-70	W0319043
8oz	Metals /CN-	163068	1052032

PHYSICAL DESCRIPTION AT TIME OF COLLECTION: dark brown organic sediment

PHYSICAL CHANGES FROM TIME OF COLLECTION UNTIL SHIPMENT: None

INSTRUMENT READINGS N/A

pH

CONDUCTIVITY

TEMPERATURE

SAMPLE DESCRIPTION

SITE NAME/TDD# Metro Dspl Syst Inc /F05-8912-090

CASE NUMBER 16377

SAMPLE #/STATION LOCATION S6

SAMPLING DATE 5/8/91 SAMPLING TIME 15:03

ORGANIC TRAFFIC NUMBER E HW88

INORGANIC TRAFFIC NUMBER MEHA9B

BOTTLE	ANALYSIS	TAG NUMBERS	LOT NUMBER
8oz	Extractables	163071	1052032
120ml	VOA	163074,-75	W031804 3
8oz	Metals/CN	163072	1052032

PHYSICAL DESCRIPTION AT TIME OF COLLECTION: dark brown, rich organic soil

PHYSICAL CHANGES FROM TIME OF COLLECTION UNTIL SHIPMENT: None

INSTRUMENT READINGS N/A

pH

CONDUCTIVITY

TEMPERATURE

SAMPLE DESCRIPTION

SITE NAME/TDD# Metro Dupl Syst, Inc / F05-8912-090

CASE NUMBER 16377

SAMPLE #/STATION LOCATION S7

SAMPLING DATE 5/8/91 SAMPLING TIME 15:00

ORGANIC TRAFFIC NUMBER EHW89

INORGANIC TRAFFIC NUMBER MEHA99

BOTTLE	ANALYSIS	TAG NUMBERS	LOT NUMBER
8 oz	Extractable	163075	1052032
120ml	VOA	163077,78	W0278013
8 oz	Metals/CN'	163076	1052032

PHYSICAL DESCRIPTION AT TIME OF COLLECTION: dark clay sediment

PHYSICAL CHANGES FROM TIME OF COLLECTION UNTIL SHIPMENT: None

INSTRUMENT READINGS N/A

pH

CONDUCTIVITY

TEMPERATURE

SAMPLE DESCRIPTION

SITE NAME/TDD# Metro Dspl Syst Inc / F05-8912-040

CASE NUMBER 16377

SAMPLE #/STATION LOCATION S8

SAMPLING DATE 5/8/91 SAMPLING TIME 13:45

ORGANIC TRAFFIC NUMBER E HW 90

INORGANIC TRAFFIC NUMBER MELP98

BOTTLE	ANALYSIS	TAG NUMBERS	LOT NUMBER
8 oz	Extractables	163079	1052032
120ml	VOA	163081,-82	W0278013
8 oz	Metals/CN	163080	1052032

PHYSICAL DESCRIPTION AT TIME OF COLLECTION: dark brown organic soil

PHYSICAL CHANGES FROM TIME OF COLLECTION UNTIL SHIPMENT: None

INSTRUMENT READINGS N/A

pH

CONDUCTIVITY

TEMPERATURE

SAMPLE DESCRIPTION

SITE NAME/TOD# Metro Dspl Syst Inc / F05-8912-090

CASE NUMBER 16377

SAMPLE #/STATION LOCATION LW1

SAMPLING DATE 5/8/91 SAMPLING TIME 16:45

ORGANIC TRAFFIC NUMBER EKF57

INORGANIC TRAFFIC NUMBER MELT 98

BOTTLE	ANALYSIS	TAG NUMBERS	LOT NUMBER
8oz amber	Extractables	163137, -138	0232033
40mL	VOA	163141, -142	B0193033/B0193043
1L Plastic	Metals	163139	0319023
1L Plastic	CN⁻	163140	0319023

PHYSICAL DESCRIPTION AT TIME OF COLLECTION: dark leachate sample

PHYSICAL CHANGES FROM TIME OF COLLECTION UNTIL SHIPMENT: separation to 2 phase

INSTRUMENT READINGS N/A

pH

CONDUCTIVITY

TEMPERATURE

SAMPLE DESCRIPTION

SITE NAME/TOD# Metro Dspl Syst Inc / F05-8912-090

CASE NUMBER 16377

SAMPLE #/STATION LOCATION LWZ / MSD

SAMPLING DATE 5/8/91 SAMPLING TIME 16:00

ORGANIC TRAFFIC NUMBER EHM01 / EHM02 (MSD)

INORGANIC TRAFFIC NUMBER ME LT 99

BOTTLE	ANALYSIS	TAG NUMBERS	LOT NUMBER
8 oz amber	Extractables	163143, -44, 163149, -50	0232033 / 0211043
40 mL	VOA	163147, -48, 163151-54	B0193033 / B0193043
1L Plastic	Metals	163145	0319023
1L Plastic	CN^-	163146	0319023

PHYSICAL DESCRIPTION AT TIME OF COLLECTION: dark leachate sample

PHYSICAL CHANGES FROM TIME OF COLLECTION UNTIL SHIPMENT: 2 phase separation

INSTRUMENT READINGS N/A

pH

CONDUCTIVITY

TEMPERATURE

SAMPLE DESCRIPTION

SITE NAME/TDD# Metro Dspl Syst Inc / F05-8912-090

CASE NUMBER 16377

SAMPLE #/STATION LOCATION Dup

SAMPLING DATE 5/8/91 SAMPLING TIME 16:45

ORGANIC TRAFFIC NUMBER EHN03

INORGANIC TRAFFIC NUMBER MEKN02

BOTTLE	ANALYSIS	TAG NUMBERS	LOT NUMBER
8Oz amber	Extractables	163155-56	0211043
40mL	VOA	163159-160	B0193033
1L Plastic	Metals	163157	0319023
1L Plastic	CN^-	163158	0319023

PHYSICAL DESCRIPTION AT TIME OF COLLECTION: dark leachate sample

PHYSICAL CHANGES FROM TIME OF COLLECTION UNTIL SHIPMENT: 2 phase separation

INSTRUMENT READINGS N/A

pH

CONDUCTIVITY

TEMPERATURE

SAMPLE DESCRIPTION

SITE NAME/TDD# Metro Dspl Syst Inc / F05-8912-090

CASE NUMBER 16377

SAMPLE #/STATION LOCATION Blank

SAMPLING DATE 5/8/91 SAMPLING TIME 16:30

ORGANIC TRAFFIC NUMBER E HM04

INORGANIC TRAFFIC NUMBER MEKN03

BOTTLE	ANALYSIS	TAG NUMBERS	LOT NUMBER
8Oz amber	Extractables	163161, -162	6232035
40mL	VOA	163165, -166	B0193033/B0193043
1L Plastic	Metals	163163	0319023
1L Plastic	CN^-	163164	0319023

PHYSICAL DESCRIPTION AT TIME OF COLLECTION: Clear, colorless

PHYSICAL CHANGES FROM TIME OF COLLECTION UNTIL SHIPMENT: None

INSTRUMENT READINGS N/A

pH

CONDUCTIVITY

TEMPERATURE

SAMPLE DESCRIPTION

SITE NAME/TDD# Metro Dspl Syst Inc. / F05-8912-090

CASE NUMBER 16377

SAMPLE #/STATION LOCATION MW1

SAMPLING DATE 5/9/91 SAMPLING TIME 11:30

ORGANIC TRAFFIC NUMBER EKX66

INORGANIC TRAFFIC NUMBER ME LP 99

BOTTLE	ANALYSIS	TAG NUMBERS	LOT NUMBER
80 oz Amber	Extractables	163083, -084	8232033
40 mL	VOA	163087, -088	B0193043 / B0171633
1 L Plastic	Metals	163085	319023
1 L Plastic	CN^-	163086	319023

PHYSICAL DESCRIPTION AT TIME OF COLLECTION: dark opaque

PHYSICAL CHANGES FROM TIME OF COLLECTION UNTIL SHIPMENT: None

INSTRUMENT READINGS

pH 6.08

CONDUCTIVITY 1334

TEMPERATURE 13°C

SAMPLE DESCRIPTION

SITE NAME/TDD# Metro Disp Syst Inc. / F05-8912-090

CASE NUMBER 16377

SAMPLE #/STATION LOCATION MW2 / MSD

SAMPLING DATE 5/9/91 SAMPLING TIME 10:20

ORGANIC TRAFFIC NUMBER EMN98

INORGANIC TRAFFIC NUMBER MELT91

BOTTLE	ANALYSIS	TAG NUMBERS	LOT NUMBER
8 oz Amber	Extractables	163089,-90, 163095,-96	0232033
40 mL	VOA	163091,-92, 163097-100	B017 1033
1 L Plastic	Metals	163091	319023
1 L Plastic	CN^-	163092	319023

PHYSICAL DESCRIPTION AT TIME OF COLLECTION: dark opaque liquid

PHYSICAL CHANGES FROM TIME OF COLLECTION UNTIL SHIPMENT: None

INSTRUMENT READINGS

pH 6.27

CONDUCTIVITY 4520

TEMPERATURE 14°C

SAMPLE DESCRIPTION

SITE NAME/TDD# Metro Dspl Syst Inc. / F05-8912-090

CASE NUMBER 16377

SAMPLE #/STATION LOCATION MW3

SAMPLING DATE 5/9/91 SAMPLING TIME 12:30

ORGANIC TRAFFIC NUMBER EHW91

INORGANIC TRAFFIC NUMBER MELT 92

BOTTLE	ANALYSIS	TAG NUMBERS	LOT NUMBER
8 oz Amber	Extractables	163101 - 102	0211043
40 mL	VOA	163105 - 106	B0171033
1 L Plastic	Metals	163103	319023
1 L Plastic	CN^-	163104	319023

PHYSICAL DESCRIPTION AT TIME OF COLLECTION: dark opaque liquid

PHYSICAL CHANGES FROM TIME OF COLLECTION UNTIL SHIPMENT: None

INSTRUMENT READINGS

pH 6.6

CONDUCTIVITY 1326

TEMPERATURE 15°C

SAMPLE DESCRIPTION

SITE NAME/TDD# Metro Dspl Syst Inc. / F05-8912-090

CASE NUMBER 16377

SAMPLE #/STATION LOCATION MW4

SAMPLING DATE 5/9/91 SAMPLING TIME 12:00

ORGANIC TRAFFIC NUMBER EHW 92

INORGANIC TRAFFIC NUMBER MELT 93

BOTTLE	ANALYSIS	TAG NUMBERS	LOT NUMBER
80 oz Amber	Extractables	163107-108	0211043
40 mL	VOA	163111-112	B0171033
1 L Plastic	Metals	163109	319023
1 L Plastic	CN^-	163110	319023

PHYSICAL DESCRIPTION AT TIME OF COLLECTION: dark opaque liquid

PHYSICAL CHANGES FROM TIME OF COLLECTION UNTIL SHIPMENT: None

INSTRUMENT READINGS

pH 7.09

CONDUCTIVITY 799

TEMPERATURE 15°C

SAMPLE DESCRIPTION

SITE NAME/TDD# Metro Dspl Syst Inc. / F05-8912-090

CASE NUMBER 16377

SAMPLE #/STATION LOCATION Dup

SAMPLING DATE 5/9/91 SAMPLING TIME 11:30

ORGANIC TRAFFIC NUMBER EJW94

INORGANIC TRAFFIC NUMBER MEL+96

BOTTLE	ANALYSIS	TAG NUMBERS	LOT NUMBER
8 oz Amber	Extractables	163125, 126	0211643
40 mL	VOA	163129, 130	B0171033
1 L Plastic	Metals	163127	319023
1 L Plastic	CN^-	163128	319023

PHYSICAL DESCRIPTION AT TIME OF COLLECTION: dark opaque

PHYSICAL CHANGES FROM TIME OF COLLECTION UNTIL SHIPMENT: None

INSTRUMENT READINGS

pH 6.08

CONDUCTIVITY 1334

TEMPERATURE 13°C

SAMPLE DESCRIPTION

SITE NAME/TDD# Metro Disp Syst Inc. / F05-8912-090

CASE NUMBER 16377

SAMPLE #/STATION LOCATION Blank

SAMPLING DATE 5/9/91 SAMPLING TIME 13:00

ORGANIC TRAFFIC NUMBER EJW 99

INORGANIC TRAFFIC NUMBER MELT 97

BOTTLE	ANALYSIS	TAG NUMBERS	LOT NUMBER
80 oz Amber	Extractables	163131-132	0211043
40 mL	VOA	163135-136	B0711033
1 L Plastic	Metals	163133	319023
1 L Plastic	CN^-	163134	319023

PHYSICAL DESCRIPTION AT TIME OF COLLECTION: Clear, Colorless

PHYSICAL CHANGES FROM TIME OF COLLECTION UNTIL SHIPMENT: None

INSTRUMENT READINGS

pH 6.71

CONDUCTIVITY 8.13

TEMPERATURE 18°C

F I T S A M P L E P R O P O S A L F O R M R E G I O N V

DATE FORM COMPLETED 04-19-91 PAN# FIL04175A TDD# F05-8912-090 EPA I.D.# ILD980607204

SITE NAME (PRINT) Metro Disposal System, Inc. CITY Fairmont City STATE IL

TEAM LEADER Ed Belmonte SAMPLER Tim Rodriguez DATE SENT TO RSCC

CASE # 16377 DRINKING WATER SAS # ORGANIC NA INORGANIC NA

4=Leachate wells
6 = M.W.
* = 2 phases in some samples

ROUTINE ANALYTICAL SERVICES (RAS)

LOW WATERS FRACTION	MONITORING WELLS NUMBER OF FIELD SAMPLES+ BLANKS+ DUPLICATE= TOTAL	EXPECTED DATE TO SAMPLE	LABORATORY NAME	NUMBER OF COOLERS SHIPPED	NUMBER OF SAMPLES SHIPPED	AIR BILL NUMBERS	DATE SHIPPED TO LAB
VOA	6 + 1 + 1 = 8	05-08-91	PET	2	4*	9295286766	5/8/91
ABNs				1??	6	9295286781	5/9/91
PEST/PCB			DATAC	1	4*	9295286770	5/8/91
METALS				1??	6	9295286792	5/9/91
CN							

LOW WATERS FRACTION	SURFACE WATERS NUMBER OF FIELD SAMPLES+ BLANKS+ DUPLICATE= TOTAL	EXPECTED DATE TO SAMPLE	LABORATORY NAME	NUMBER OF COOLERS SHIPPED	NUMBER OF SAMPLES SHIPPED	AIR BILL NUMBERS (Faxed)	DATE SHIPPED TO LAB
VOA							
ABNs							
PEST/PCB							
METALS							
CN							

T.L. accidentally put SW - he meant Soil 4/30/91 per A. Davis

LOW SOILS/SEDIMENTS/SLUDGES FRACTION	NUMBER OF FIELD SAMPLES+ BLANKS+ DUPLICATE= TOTAL	EXPECTED DATE TO SAMPLE	LABORATORY NAME	NUMBER OF COOLERS SHIPPED	NUMBER OF SAMPLES SHIPPED	AIR BILL NUMBERS	DATE SHIPPED TO LAB
VOA	8 + 0 + 0 = 8	05/08/91	PET	1	8	9295286766	5/8/91
ABNs							
PEST/PCB			DATAC	1	8	9295286770	5/8/91
METALS							
CN							

RESIDENTIAL/ MUNICIPAL WELL WATERS (DRINKING WATER SAMPLES)

LOW DETECTION LIMITS/FAST TURN AROUND FRACTION	NUMBER OF FIELD SAMPLES+ BLANKS+ DUPLICATE= TOTAL	EXPECTED DATE TO SAMPLE	LABORATORY NAME	NUMBER OF COOLERS SHIPPED	NUMBER OF SAMPLES SHIPPED	AIR BILL NUMBERS (Faxed)	DATE SHIPPED TO LAB
VOA							
ABNs							
PEST/PCB							
METALS							
CN							

SEE NEXT PAGE FOR SPECIAL ANALYTICAL SERVICE REQUEST FOR THIS SITE

SAS #

Confirm ✓

recycled paper

ecology and environment

SAMPLE DESCRIPTION

SITE NAME/TDD# Metro Dspl Syst. Inc / F05-8912-090

CASE NUMBER 16377

SAMPLE #/STATION LOCATION S1

SAMPLING DATE 5/8/91 SAMPLING TIME 12:30.

ORGANIC TRAFFIC NUMBER ES 387

INORGANIC TRAFFIC NUMBER ME HA 93

BOTTLE	ANALYSIS	TAG NUMBERS	LOT NUMBER
8 oz	Extractables	163051	1052032
120ml	VOA	163053, -54	W0318043
8 oz	Metals / CN-	163052	1052032

PHYSICAL DESCRIPTION AT TIME OF COLLECTION: dark brown wet sediment

PHYSICAL CHANGES FROM TIME OF COLLECTION UNTIL SHIPMENT: None

INSTRUMENT READINGS N/A

pH

CONDUCTIVITY

TEMPERATURE

SAMPLE DESCRIPTION

SITE NAME/TDD# Metro Dspl Syst Inc / F05-8912-090

CASE NUMBER 16377

SAMPLE #/STATION LOCATION S2

SAMPLING DATE 5/8/91 SAMPLING TIME 12:45

ORGANIC TRAFFIC NUMBER ES388

INORGANIC TRAFFIC NUMBER MEHA 94

BOTTLE	ANALYSIS	TAG NUMBERS	LOT NUMBER
8oz	Extractables	163055	1052032
120ml	VOA	163057,-58	W0318043
8oz	Metals/CN-	163056	1052032

PHYSICAL DESCRIPTION AT TIME OF COLLECTION: dark brown sediment

PHYSICAL CHANGES FROM TIME OF COLLECTION UNTIL SHIPMENT: None

INSTRUMENT READINGS N/A

pH

CONDUCTIVITY

TEMPERATURE

SAMPLE DESCRIPTION

SITE NAME/TDD# Metro Disp. Syst. Inc / F05-8912-090

CASE NUMBER 16377

SAMPLE #/STATION LOCATION S3

SAMPLING DATE 5/8/91 SAMPLING TIME 12:50

ORGANIC TRAFFIC NUMBER ES 389

INORGANIC TRAFFIC NUMBER MEHA 95

BOTTLE	ANALYSIS	TAG NUMBERS	LOT NUMBER
8 oz	Extractables	163059	1052032
120 ml	VOA	163061, -62	W0318043
8 oz	Metals / CN^-	163060	1052032

PHYSICAL DESCRIPTION AT TIME OF COLLECTION: dark moist organic soil with pebbles

PHYSICAL CHANGES FROM TIME OF COLLECTION UNTIL SHIPMENT: None

INSTRUMENT READINGS N/A

pH

CONDUCTIVITY

TEMPERATURE

SAMPLE DESCRIPTION

SITE NAME/TDD# Metro Dspl Syst, Inc /F05-8912-040

CASE NUMBER 16377

SAMPLE #/STATION LOCATION S4

SAMPLING DATE 5/8/91 SAMPLING TIME 1100

ORGANIC TRAFFIC NUMBER ES390

INORGANIC TRAFFIC NUMBER MEHA96

BOTTLE	ANALYSIS	TAG NUMBERS	LOT NUMBER
8 oz	Extractables	163063	1052032
120ml	VOA	163065,-66	W0318043
8 oz	Metals/CN	163064	1052032

PHYSICAL DESCRIPTION AT TIME OF COLLECTION: dark moist organic soil

PHYSICAL CHANGES FROM TIME OF COLLECTION UNTIL SHIPMENT: None

INSTRUMENT READINGS N/A

pH

CONDUCTIVITY

TEMPERATURE

SAMPLE DESCRIPTION

SITE NAME/TOD# Metro Disp1 Syst Inc /F05-8912-040

CASE NUMBER 16377

SAMPLE #/STATION LOCATION S5

SAMPLING DATE 5/8/91 SAMPLING TIME 13:20

ORGANIC TRAFFIC NUMBER ES391

INORGANIC TRAFFIC NUMBER MEHA 97

BOTTLE	ANALYSIS	TAG NUMBERS	LOT NUMBER
8oz	Extractable	163067	1052032
120ml	VOA	163069,-70	W0319043
8oz	Metals /CN⁻	163068	1052032

PHYSICAL DESCRIPTION AT TIME OF COLLECTION: dark brown organic sediment

PHYSICAL CHANGES FROM TIME OF COLLECTION UNTIL SHIPMENT: None

INSTRUMENT READINGS N/A

pH

CONDUCTIVITY

TEMPERATURE

SAMPLE DESCRIPTION

SITE NAME/TDD# Metro Dspl Syst Inc /F05-8912-090

CASE NUMBER 16377

SAMPLE #/STATION LOCATION S6

SAMPLING DATE 5/8/91 SAMPLING TIME 15:03

ORGANIC TRAFFIC NUMBER EHW88

INORGANIC TRAFFIC NUMBER MEHH4GB

BOTTLE	ANALYSIS	TAG NUMBERS	LOT NUMBER
8oz	Extractables	163071	1052032
120ml	VOA	163074,-75	W031,8043
8oz	Metals/CN	163072	1052032

PHYSICAL DESCRIPTION AT TIME OF COLLECTION: dark brown, rich organic soil

PHYSICAL CHANGES FROM TIME OF COLLECTION UNTIL SHIPMENT: None

INSTRUMENT READINGS N/A

pH

CONDUCTIVITY

TEMPERATURE

SAMPLE DESCRIPTION

SITE NAME/TOD# Metro Displ Syst, Inc / F05-8912-090

CASE NUMBER 16377

SAMPLE #/STATION LOCATION S7

SAMPLING DATE 5/8/91 SAMPLING TIME 15:00

ORGANIC TRAFFIC NUMBER EHW89

INORGANIC TRAFFIC NUMBER MEHA99

BOTTLE	ANALYSIS	TAG NUMBERS	LOT NUMBER
8 oz	Extractable	163075	1052032
120ml	VOA	163077,78	W0278013
8 oz	Metals/CN'	163076	1052032

PHYSICAL DESCRIPTION AT TIME OF COLLECTION: dark clay sediment

PHYSICAL CHANGES FROM TIME OF COLLECTION UNTIL SHIPMENT: None

INSTRUMENT READINGS N/A

pH

CONDUCTIVITY

TEMPERATURE

SAMPLE DESCRIPTION

SITE NAME/TDD# Metro Dspl Syst Inc / F05-8912-040

CASE NUMBER 16377

SAMPLE #/STATION LOCATION S8

SAMPLING DATE 5/8/91 SAMPLING TIME 13:45

ORGANIC TRAFFIC NUMBER EHW 90

INORGANIC TRAFFIC NUMBER MELP98

BOTTLE	ANALYSIS	TAG NUMBERS	LOT NUMBER
8 oz	Extractables	163079	1052032
120 ml	VOA	163081, -82	W0278013
8 oz	Metals / CN⁻	163080	1052032

PHYSICAL DESCRIPTION AT TIME OF COLLECTION: dark brown organic soil

PHYSICAL CHANGES FROM TIME OF COLLECTION UNTIL SHIPMENT: None

INSTRUMENT READINGS N/A

pH

CONDUCTIVITY

TEMPERATURE

SAMPLE DESCRIPTION

SITE NAME/TDD# Metro Dspl Syst Inc / F05-8912-090

CASE NUMBER 16377

SAMPLE #/STATION LOCATION LWZ / MSD

SAMPLING DATE 5/8/91 SAMPLING TIME 16:00

ORGANIC TRAFFIC NUMBER EHM01 / EHM02 (MSD)

INORGANIC TRAFFIC NUMBER ME LT 99

BOTTLE	ANALYSIS	TAG NUMBERS	LOT NUMBER
8oz amber	Extractables	163143, -44, 163149, -52	0232033 / 0211043
40ml	VOA	163147, -48, 163151-54	B0193033 / B0193043
1L Plastic	Metals	163145	0319023
1L Plastic	CN⁻	163146	0319023

PHYSICAL DESCRIPTION AT TIME OF COLLECTION: dark leachate sample

PHYSICAL CHANGES FROM TIME OF COLLECTION UNTIL SHIPMENT: 2 phase separation

INSTRUMENT READINGS N/A

pH

CONDUCTIVITY

TEMPERATURE

SAMPLE DESCRIPTION

SITE NAME/TDD# Metro Dspl Syst Inc / F05-8912-090

CASE NUMBER 16377

SAMPLE #/STATION LOCATION Dup

SAMPLING DATE 5/8/91 SAMPLING TIME 16:45

ORGANIC TRAFFIC NUMBER EHM03

INORGANIC TRAFFIC NUMBER MEKN02

BOTTLE	ANALYSIS	TAG NUMBERS	LOT NUMBER
8oz amber	Extractables	163155-56	0211043
40ml	VOA	163159-60	B0193033
1L Plastic	Metals	163157	0319023
1L Plastic	CN^-	163158	0319023

PHYSICAL DESCRIPTION AT TIME OF COLLECTION: dark leachate sample

PHYSICAL CHANGES FROM TIME OF COLLECTION UNTIL SHIPMENT: 2 phase separation

INSTRUMENT READINGS N/A

pH

CONDUCTIVITY

TEMPERATURE

SAMPLE DESCRIPTION

SITE NAME/TDD# Metro Dspl Syst Inc / F05-8912-090

CASE NUMBER 16377

SAMPLE #/STATION LOCATION Blank

SAMPLING DATE 5/8/91 SAMPLING TIME 16:30

ORGANIC TRAFFIC NUMBER EHM04

INORGANIC TRAFFIC NUMBER MEKN03

BOTTLE	ANALYSIS	TAG NUMBERS	LOT NUMBER
8oz amber	Extractables	163161, -162	6232035
40ml	VOA	163165, -166	B0193033/B0193043
1L Plastic	Metals	163163	0319023
1L Plastic	CN^-	163164	0319023

PHYSICAL DESCRIPTION AT TIME OF COLLECTION: Clear, colorless

PHYSICAL CHANGES FROM TIME OF COLLECTION UNTIL SHIPMENT: None

INSTRUMENT READINGS N/A

pH

CONDUCTIVITY

TEMPERATURE

SAMPLE DESCRIPTION

SITE NAME/TDD# Metro Dspl Syst Inc / F05-8912-090

CASE NUMBER 16377

SAMPLE #/STATION LOCATION LW1

SAMPLING DATE 5/8/91 SAMPLING TIME 16:45

ORGANIC TRAFFIC NUMBER EKF57

INORGANIC TRAFFIC NUMBER MELT 98

BOTTLE	ANALYSIS	TAG NUMBERS	LOT NUMBER
8oz amber	Extractables	163137, -138	0232033
40mL	VOA	163141, -142	B0193033/B0193043
1L Plastic	Metals	163139	0319023
1L Plastic	CN⁻	163140	0319023

PHYSICAL DESCRIPTION AT TIME OF COLLECTION: dark leachate sample

PHYSICAL CHANGES FROM TIME OF COLLECTION UNTIL SHIPMENT: separation to 2 phase

INSTRUMENT READINGS N/A

pH

CONDUCTIVITY

TEMPERATURE

SAMPLE DESCRIPTION

SITE NAME/TDD# Metro Dspl Syst Inc. / F05-8912-090

CASE NUMBER 16377

SAMPLE #/STATION LOCATION MW1

SAMPLING DATE 5/9/91 SAMPLING TIME 11:30

ORGANIC TRAFFIC NUMBER EKX66

INORGANIC TRAFFIC NUMBER ME LP 99

BOTTLE	ANALYSIS	TAG NUMBERS	LOT NUMBER
8 oz Amber	Extractables	163083, -084	0232033
40 mL	VOA	163087, -088	B0193043 / B0171633
1 L Plastic	Metals	163085	319023
1 L Plastic	CN^-	163086	319023

PHYSICAL DESCRIPTION AT TIME OF COLLECTION: dark opaque

PHYSICAL CHANGES FROM TIME OF COLLECTION UNTIL SHIPMENT: None

INSTRUMENT READINGS

pH 6.08

CONDUCTIVITY 1334

TEMPERATURE 13°C

SAMPLE DESCRIPTION

SITE NAME/TDD# Metro Disp Syst Inc. / FCS-8912-090

CASE NUMBER 16377

SAMPLE #/STATION LOCATION MW2 / MSD

SAMPLING DATE 5/9/91 SAMPLING TIME 10:20

ORGANIC TRAFFIC NUMBER EMN98

INORGANIC TRAFFIC NUMBER MELT91

BOTTLE	ANALYSIS	TAG NUMBERS	LOT NUMBER
8 oz Amber	Extractables	163089,-90, 163095,-96	0232033
40 mL	VOA	163091,-92, 163097-100	B017 1033
1 L Plastic	Metals	163091	319023
1 L Plastic	CN^-	163092	319023

PHYSICAL DESCRIPTION AT TIME OF COLLECTION: dark opaque liquid

PHYSICAL CHANGES FROM TIME OF COLLECTION UNTIL SHIPMENT: None

INSTRUMENT READINGS

pH 6.27

CONDUCTIVITY 4520

TEMPERATURE 14°C

SAMPLE DESCRIPTION

SITE NAME/TDD# Metro Disp Syst Inc. / F05-8912-090

CASE NUMBER 16377

SAMPLE #/STATION LOCATION MW3

SAMPLING DATE 5/9/91 SAMPLING TIME 12:30

ORGANIC TRAFFIC NUMBER EHW91

INORGANIC TRAFFIC NUMBER MELT 92

BOTTLE	ANALYSIS	TAG NUMBERS	LOT NUMBER
8 oz Amber	Extractables	163101 - 102	021043
40 mL	VOA	163105 - 106	B0171033
1 L Plastic	Metals	163103	319023
1 L Plastic	CN^-	163104	319023

PHYSICAL DESCRIPTION AT TIME OF COLLECTION: dark opaque liquid

PHYSICAL CHANGES FROM TIME OF COLLECTION UNTIL SHIPMENT: None

INSTRUMENT READINGS

pH 6.6

CONDUCTIVITY 13.26

TEMPERATURE 15°C

SAMPLE DESCRIPTION

SITE NAME/TDD# Metro Disp Syst Inc. / FOS-8912-090

CASE NUMBER 16377

SAMPLE #/STATION LOCATION MW4

SAMPLING DATE 5/9/91 SAMPLING TIME 12:00

ORGANIC TRAFFIC NUMBER EHW92

INORGANIC TRAFFIC NUMBER MELT 43

BOTTLE	ANALYSIS	TAG NUMBERS	LOT NUMBER
80 oz Amber	Extractables	163107-108	0211043
40 mL	VOA	163111-112	B0171033
1 L Plastic	Metals	163109	319023
1 L Plastic	CN^-	163110	319023

PHYSICAL DESCRIPTION AT TIME OF COLLECTION: dark opaque liquid

PHYSICAL CHANGES FROM TIME OF COLLECTION UNTIL SHIPMENT: None

INSTRUMENT READINGS

pH 7.09

CONDUCTIVITY 799

TEMPERATURE 15°C

SAMPLE DESCRIPTION

SITE NAME/TDD# Metro Disp Syst Inc. / FC5-8912-090

CASE NUMBER 16377

SAMPLE #/STATION LOCATION Dup

SAMPLING DATE 5/9/91 SAMPLING TIME 11:30

ORGANIC TRAFFIC NUMBER EJW94

INORGANIC TRAFFIC NUMBER MEL+96

BOTTLE	ANALYSIS	TAG NUMBERS	LOT NUMBER
8 oz Amber	Extractables	163125, 126	0211643
40 mL	VOA	163129, 130	B0171033
1 L Plastic	Metals	163127	319023
1 L Plastic	CN^-	163128	319023

PHYSICAL DESCRIPTION AT TIME OF COLLECTION: dark opaque

PHYSICAL CHANGES FROM TIME OF COLLECTION UNTIL SHIPMENT: None

INSTRUMENT READINGS

pH 6.08

CONDUCTIVITY 1334

TEMPERATURE 13°C

SAMPLE DESCRIPTION

SITE NAME/TDD# Metro Disp Syst Inc. / F05-8912-090

CASE NUMBER 16377

SAMPLE #/STATION LOCATION Blank

SAMPLING DATE 5/9/91 SAMPLING TIME 13:00

ORGANIC TRAFFIC NUMBER EJW 99

INORGANIC TRAFFIC NUMBER MELT 97

BOTTLE	ANALYSIS	TAG NUMBERS	LOT NUMBER
80 oz Amber	Extractables	163131-132	0211043
40 mL	VOA	163135-136	B0711033
1 L Plastic	Metals	163133	319023
1 L Plastic	CN^-	163134	319023

PHYSICAL DESCRIPTION AT TIME OF COLLECTION: Clear, Colorless

PHYSICAL CHANGES FROM TIME OF COLLECTION UNTIL SHIPMENT: None

INSTRUMENT READINGS

pH 6.71

CONDUCTIVITY 8.13

TEMPERATURE 18°C

FEDERAL EXPRESS

USE THIS AIRBILL FOR SHIPMENTS WITHIN THE CONTINENTAL U.S.A., ALASKA AND HAWAII.
USE THE INTERNATIONAL AIR WAYBILL FOR SHIPMENTS TO PUERTO RICO AND ALL NON U.S. LOCATIONS.
QUESTIONS? CALL 800-238-5355 TOLL FREE.

PACKAGE TRACKING NUMBER 9295286770

282M 9295286770

SENDER'S COPY

Sender's Federal Express Account Number: 1270-9910-3
Date: 5/8/91

1 From (Your Name) Please Print: [illegible]
Your Phone Number (Very Important): 312-775-7763
Company: ECOLOGY & ENVIRONMENT
Department/Floor No.:
Street Address: 5634 NORTHWEST HWY
City: CHICAGO State: IL ZIP Required: 60646

2 To (Recipient's Name) Please Print: [illegible]
Recipient's Phone Number (Very Important): ( ) [illegible]
Company: [illegible] Laboratories, Inc.
Department/Floor No.:
Exact Street Address (We Cannot Deliver to P.O. Boxes or P.O. Zip + Codes.): [illegible] Lewis Drive
City: [illegible] State: UT ZIP Required: 84123

YOUR INTERNAL BILLING REFERENCE INFORMATION (First 24 characters will appear on invoice.): [illegible]

H IF HOLD FOR PICK-UP, Print FEDEX Address Here
Street Address:
City: State: ZIP Required:

3 PAYMENT 1 [X] Bill Sender 2 [ ] Bill Recipient's FedEx Acct. No. 3 [ ] Bill 3rd Party FedEx Acct. No. 4 [ ] Bill Credit Card
5 [ ] Cash/Check Acct./Credit Card No. Exp. Date

4 SERVICES (Check only one box)

Priority Overnight Service (Delivery by next business morning†)
11 [X] YOUR PACKAGING
16 [ ] FEDEX LETTER *
12 [ ] FEDEX PAK *
13 [ ] FEDEX BOX
14 [ ] FEDEX TUBE

Standard Overnight Service (Delivery by next business afternoon†)
51 [ ]
56 [ ] FEDEX LETTER *
52 [ ] FEDEX PAK *
53 [ ] FEDEX BOX
54 [ ] FEDEX TUBE

Economy Two-Day Service (formerly Standard Air) (Delivery by second business day†)
30 [ ] ECONOMY TWO-DAY SVC.

Heavyweight Service (for Extra Large or any package over 150 lbs.)
70 [ ] HEAVYWEIGHT **
80 [ ] DEFERRED HEAVYWEIGHT **

†Delivery commitment may be later in some areas.
*Declared Value Limit $100.
**Call for delivery schedule.

DELIVERY AND SPECIAL HANDLING (Check services required)
1 [ ] HOLD FOR PICK-UP (Fill in Box H)
2 [X] DELIVER WEEKDAY
3 DELIVER SATURDAY (Extra charge) (Not available to all locations) [ ]
4 [ ] DANGEROUS GOODS (Extra charge)
5 [ ]
6 [ ] DRY ICE _____ Lbs.
7 [ ] OTHER SPECIAL SERVICE _____
8 [ ]
9 [ ] SATURDAY PICK-UP (Extra charge)
10 [ ]
11 [ ] DESCRIPTION
12 [ ] HOLIDAY DELIVERY (If offered) (Extra charge)

PACKAGES	WEIGHT In Pounds Only	YOUR DECLARED VALUE (See right)
Total 1	Total 41	Total

DIM SHIPMENT (Chargeable Weight) [ ] _____ lbs.

Received At: 1 [ ] Regular Stop 2 [ ] On-Call Stop 3 [ ] Drop Box 4 [ ] B.S.C. [X] 5 [ ] Station

FedEx Emp. No. 30457 Date/Time 5/8 - 1956

SERVICE CONDITIONS, DECLARED VALUE AND LIMIT OF LIABILITY

Use of this airbill constitutes your agreement to the service conditions in our current Service Guide, available upon request. See back of sender's copy of this airbill for information.

We will not be responsible for any claim in excess of $100 per package, whether the result of loss, damage, delay, non-delivery, misdelivery, or misinformation, unless you declare a higher value, pay an additional charge, and document your actual loss for a timely claim. Maximum amount limitations found in the current Federal Express Service Guide apply. Your right to recover from Federal Express for any loss, including intrinsic value of the package, loss of sales, income interest, profit, attorney's fees, costs, and other forms of damage whether direct, incidental, consequential, or special is limited to the greater of $100 or the declared value specified to the left. Recovery cannot exceed actual documented loss. The maximum Declared Value for FedEx Letter and FedEx Pak packages is $100.00. In the event of untimely delivery, Federal Express will at your request and with some limitations, refund all transportation charges paid. See Service Guide for further information.

5 Sender authorizes Federal Express to deliver this shipment without obtaining a delivery signature and shall indemnify and hold harmless Federal Express from any claims resulting therefrom.
Release Signature:

Federal Express Use
Base Charges
Declared Value Charge
Other 1
Other 2
Total Charges

REVISION DATE 8/90
PART #119501 FXEM 9/90
FORMAT #041
041
© 1990 F.E.C.
PRINTED IN U.S.A.

USE THIS AIRBILL FOR SHIPMENTS WITHIN THE CONTINENTAL U.S.A., ALASKA AND HAWAII.
USE THE INTERNATIONAL AIR WAYBILL FOR SHIPMENTS TO PUERTO RICO AND ALL NON U.S. LOCATIONS.
QUESTIONS? CALL 800-238-5355 TOLL FREE.

AIRBILL PACKAGE TRACKING NUMBER 9295286766

9295286766

SENDER'S COPY

Sender's Federal Express Account Number: 1270-9910-3
Date: 5/8/91

1 From (Your Name) Please Print: [illegible]
Your Phone Number (Very Important): 312-775-7763
Company: ECOLOGY & ENVIRONMENT
Department/Floor No.:
Street Address: 5634 NORTHWEST HWY
City: CHICAGO State: IL ZIP Required: 60646

2 To (Recipient's Name) Please Print: [illegible]
Recipient's Phone Number (Very Important): ( ) [illegible]
Company: IT [illegible]
Department/Floor No.:
Exact Street Address (We Cannot Deliver to P.O. Boxes or P.O. Zip + Codes.): 1149 [illegible]
City: [illegible] State: OH ZIP Required: [illegible]

YOUR INTERNAL BILLING REFERENCE INFORMATION (First 24 characters will appear on invoice.): [illegible]

H IF HOLD FOR PICK-UP, Print FEDEX Address Here
Street Address:
City: State: ZIP Required:

3 PAYMENT 1 [X] Bill Sender 2 [ ] Bill Recipient's FedEx Acct. No. 3 [ ] Bill 3rd Party FedEx Acct. No. 4 [ ] Bill Credit Card
5 [ ] Cash/Check Acct./Credit Card No. Exp. Date

4 SERVICES (Check only one box)

Priority Overnight Service (Delivery by next business morning†)
11 [X] YOUR PACKAGING
16 [ ] FEDEX LETTER *
12 [ ] FEDEX PAK *
13 [ ] FEDEX BOX
14 [ ] FEDEX TUBE

Standard Overnight Service (Delivery by next business afternoon†)
51 [ ]
56 [ ] FEDEX LETTER *
52 [ ] FEDEX PAK *
53 [ ] FEDEX BOX
54 [ ] FEDEX TUBE

Economy Two-Day Service (formerly Standard Air) (Delivery by second business day†)
30 [ ] ECONOMY TWO-DAY SVC.

Heavyweight Service (for Extra Large or any package over 150 lbs.)
70 [ ] HEAVYWEIGHT **
80 [ ] DEFERRED HEAVYWEIGHT **

†Delivery commitment may be later in some areas.
*Declared Value Limit $100.
**Call for delivery schedule.

DELIVERY AND SPECIAL HANDLING (Check services required)
1 [ ] HOLD FOR PICK-UP (Fill in Box H)
2 [X] DELIVER WEEKDAY
3 DELIVER SATURDAY (Extra charge) (Not available to all locations) [ ]
4 [ ] DANGEROUS GOODS (Extra charge)
5 [ ]
6 [ ] DRY ICE _____ Lbs.
7 [ ] OTHER SPECIAL SERVICE _____
8 [ ]
9 [ ] SATURDAY PICK-UP (Extra charge)
10 [ ]
11 [ ] DESCRIPTION
12 [ ] HOLIDAY DELIVERY (If offered) (Extra charge)

PACKAGES	WEIGHT In Pounds Only	YOUR DECLARED VALUE (See right)
1	60	
1	104	
Total 2	Total 164	Total

DIM SHIPMENT (Chargeable Weight) [ ] _____ lbs.

Received At: 1 [ ] Regular Stop 2 [ ] On-Call Stop 3 [ ] Drop Box 4 [ ] B.S.C. [X] 5 [ ] Station

FedEx Emp. No. 30457 Date/Time 5/8 - 1956

SERVICE CONDITIONS, DECLARED VALUE AND LIMIT OF LIABILITY

Use of this airbill constitutes your agreement to the service conditions in our current Service Guide, available upon request. See back of sender's copy of this airbill for information.

We will not be responsible for any claim in excess of $100 per package, whether the result of loss, damage, delay, non-delivery, misdelivery, or misinformation, unless you declare a higher value, pay an additional charge, and document your actual loss for a timely claim. Maximum amount limitations found in the current Federal Express Service Guide apply. Your right to recover from Federal Express for any loss, including intrinsic value of the package, loss of sales, income interest, profit, attorney's fees, costs, and other forms of damage whether direct, incidental, consequential, or special is limited to the greater of $100 or the declared value specified to the left. Recovery cannot exceed actual documented loss. The maximum Declared Value for FedEx Letter and FedEx Pak packages is $100.00. In the event of untimely delivery, Federal Express will at your request and with some limitations, refund all transportation charges paid. See Service Guide for further information.

5 Sender authorizes Federal Express to deliver this shipment without obtaining a delivery signature and shall indemnify and hold harmless Federal Express from any claims resulting therefrom.
Release Signature:

Federal Express Use
Base Charges
Declared Value Charge
Other 1
Other 2
Total Charges

REVISION DATE 8/90
PART #119501 FXEM 9/90
FORMAT #041
041
© 1990 F.E.C.
PRINTED IN U.S.A.

FEDERAL EXPRESS

USE THIS AIRBILL FOR SHIPMENTS WITHIN THE CONTINENTAL U.S.A., ALASKA AND HAWAII.
USE THE INTERNATIONAL AIR WAYBILL FOR SHIPMENTS TO PUERTO RICO AND ALL NON U.S. LOCATIONS.
QUESTIONS? CALL 800-238-5355 TOLL FREE.

PACKAGE TRACKING NUMBER IC 136001

282M 9295286792

SENDER'S COPY

Sender's Federal Express Account Number: 1270-9910-3
Date: 5/9/91

1 From (Your Name) Please Print: Tim Rodriguez
Your Phone Number (Very Important): 312-775-7763
Company: ECOLOGY & ENVIRONMENT
Department/Floor No.:
Street Address: 5634 NORTHWEST HWY
City: CHICAGO State: IL ZIP Required: 60646

2 To (Recipient's Name) Please Print: Lee Harris
Recipient's Phone Number (V
Company: Dak Chem Laboratories Inc
Department
Exact Street Address (We Cannot Deliver to P.O. Boxes or P.O. Zip + Codes.): 100 W. Level Drive
City: Salt Lake City State: UT ZIP Required:

YOUR INTERNAL BILLING REFERENCE INFORMATION (First 24 characters will appear on invoice.)

H IF HOLD FOR PICK-UP, Print FEDEX Address Here
Street Address
City State ZIP Required

3 PAYMENT 1 [X] Bill Sender 2 [ ] Bill Recipient's FedEx Acct. No. 3 [ ] Bill 3rd Party FedEx Acct. No. 4 [ ] Bill Credit Card
5 [ ] Cash/Check Acct./Credit Card No. Exp. Date

4 SERVICES (Check only one box)

Priority Overnight Service (Delivery by next business morning†)
11 [X] YOUR PACKAGING
16 [ ] FEDEX LETTER *
12 [ ] FEDEX PAK *
13 [ ] FEDEX BOX
14 [ ] FEDEX TUBE

Standard Overnight Service (Delivery by next business afternoon†)
51 [ ]
56 [ ] FEDEX LETTER *
52 [ ] FEDEX PAK *
53 [ ] FEDEX BOX
54 [ ] FEDEX TUBE

Economy Two-Day Service (formerly Standard Air) (Delivery by second business day†)
30 [ ] ECONOMY TWO-DAY SVC.

Heavyweight Service (for Extra Large or any package over 150 lbs.)
70 [ ] HEAVYWEIGHT **
80 [ ] DEFERRED HEAVYWEIGHT **

† Delivery commitment may be later in some areas.
*Declared Value Limit $100.
**Call for delivery schedule.

DELIVERY AND SPECIAL HANDLING (Check services required)
1 [ ] HOLD FOR PICK-UP (Fill in Box H)
2 [X] DELIVER WEEKDAY
3 DELIVER SATURDAY (Extra charge) [ ] (Not available to all locations)
4 [ ] DANGEROUS GOODS (Extra charge)
5 [ ]
6 [ ] DRY ICE _____ Lbs.
7 [ ] OTHER SPECIAL SERVICE _____
8 [ ]
9 [ ] SATURDAY PICK-UP (Extra charge)
10 [ ]
11 [ ] DESCRIPTION
12 [ ] HOLIDAY DELIVERY (If offered) (Extra charge)

PACKAGES	WEIGHT In Pounds Only	YOUR DECLARED VALUE (See right)
1	66	
Total 1	Total 66	Total

DIM SHIPMENT (Chargeable Weight) [ ] _____ lbs.

Received At
1 [ ] Regular Stop 3 [ ] Drop Box
2 [ ] On-Call Stop 4 [ ] B.S.C. 5 [X] Station

FedEx Emp. No. 3511 Date/Time 5-9-91 1505

SERVICE CONDITIONS, DECLARED VALUE AND LIMIT OF LIABILITY

Use of this airbill constitutes your agreement to the service conditions in our current Service Guide, available upon request. See back of sender's copy of this airbill for information.

We will not be responsible for any claim in excess of $100 per package, whether the result of loss, damage, delay, non-delivery, misdelivery, or misinformation, unless you declare a higher value, pay an additional charge, and document your actual loss for a timely claim. Maximum amount limitations found in the current Federal Express Service Guide apply. Your right to recover from Federal Express for any loss, including intrinsic value of the package, loss of sales, income interest, profit, attorney's fees, costs, and other forms of damage whether direct, incidental, consequential, or special is limited to the greater of $100 or the declared value specified to the left. Recovery cannot exceed actual documented loss. The maximum Declared Value for FedEx Letter and FedEx Pak packages is $100.00.

In the event of untimely delivery, Federal Express will at your request and with some limitations, refund all transportation charges paid. See Service Guide for further information.

Sender authorizes Federal Express to deliver this shipment without obtaining a delivery signature and shall indemnify and hold harmless Federal Express from any claims resulting therefrom.

5 Release Signature:

Federal Exp
Base Charge
Declared Val
Other 1
Other 2
Total Charge

REVISION DATE
PART #119501
FORMAT #041
041
© 1990 FEC PRINTED IN U.S.A.

SENDER'S COPY

FEDERAL EXPRESS

USE THIS AIRBILL FOR SHIPMENTS WITHIN THE CONTINENTAL U.S.A., ALASKA AND HAWAII.
USE THE INTERNATIONAL AIR WAYBILL FOR SHIPMENTS TO PUERTO RICO AND ALL NON U.S. LOCATIONS.
QUESTIONS? CALL 800-238-5355 TOLL FREE.

AIRBILL PACKAGE TRACKING NUMBER 9295286781

282M 9295286781

SENDER'S COPY

Sender's Federal Express Account Number: 1270-9910-3
Date: 5/9/91

1 From (Your Name) Please Print: Tim Rodriguez
Your Phone Number (Very Important): 312-775-7763
Company: ECOLOGY & ENVIRONMENT
Department/Floor No.:
Street Address: 5634 NORTHWEST HWY
City: CHICAGO State: IL ZIP Required: 60646

2 To (Recipient's Name) Please Print: [illegible]
Recipient's Phone Number (Very
Company: [illegible] Laboratories
Department/
Exact Street Address (We Cannot Deliver to P.O. Boxes or P.O. Zip + Codes.): [illegible] Road
City: [illegible] State: OH ZIP Required: [illegible]

YOUR INTERNAL BILLING REFERENCE INFORMATION (First 24 characters will appear on invoice.)

H IF HOLD FOR PICK-UP, Print FEDEX Address Here
Street Address
City State ZIP Required

3 PAYMENT 1 [X] Bill Sender 2 [ ] Bill Recipient's FedEx Acct. No. 3 [ ] Bill 3rd Party FedEx Acct. No. 4 [ ] Bill Credit Card
5 [ ] Cash/Check Acct./Credit Card No. Exp. Date

4 SERVICES (Check only one box)

Priority Overnight Service (Delivery by next business morning†)
11 [X] YOUR PACKAGING
16 [ ] FEDEX LETTER *
12 [ ] FEDEX PAK *
13 [ ] FEDEX BOX
14 [ ] FEDEX TUBE

Standard Overnight Service (Delivery by next business afternoon†)
51 [ ]
56 [ ] FEDEX LETTER *
52 [ ] FEDEX PAK *
53 [ ] FEDEX BOX
54 [ ] FEDEX TUBE

Economy Two-Day Service (formerly Standard Air) (Delivery by second business day†)
30 [ ] ECONOMY TWO-DAY SVC.

Heavyweight Service (for Extra Large or any package over 150 lbs.)
70 [ ] HEAVYWEIGHT **
80 [ ] DEFERRED HEAVYWEIGHT **

† Delivery commitment may be later in some areas.
*Declared Value Limit $100.
**Call for delivery schedule.

DELIVERY AND SPECIAL HANDLING (Check services required)
1 [ ] HOLD FOR PICK-UP (Fill in Box H)
2 [X] DELIVER WEEKDAY
3 DELIVER SATURDAY (Extra charge) [ ] (Not available to all locations)
4 [ ] DANGEROUS GOODS (Extra charge)
5 [ ]
6 [ ] DRY ICE _____ Lbs.
7 [ ] OTHER SPECIAL SERVICE _____
8 [ ]
9 [ ] SATURDAY PICK-UP (Extra charge)
10 [ ]
11 [ ] DESCRIPTION
12 [ ] HOLIDAY DELIVERY (If offered) (Extra charge)

PACKAGES	WEIGHT In Pounds Only	YOUR DECLARED VALUE (See right)
1	71	
1	71	
Total 2	Total 142	Total

DIM SHIPMENT (Chargeable Weight) [ ] _____ lbs.

Received At
1 [ ] Regular Stop 3 [ ] Drop Box
2 [ ] On-Call Stop 4 [ ] B.S.C. 5 [X] Station

FedEx Emp. No. 3511 Date/Time 5-9-91 1505

SERVICE CONDITIONS, DECLARED VALUE AND LIMIT OF LIABILITY

Use of this airbill constitutes your agreement to the service conditions in our current Service Guide, available upon request. See back of sender's copy of this airbill for information.

We will not be responsible for any claim in excess of $100 per package, whether the result of loss, damage, delay, non-delivery, misdelivery, or misinformation, unless you declare a higher value, pay an additional charge, and document your actual loss for a timely claim. Maximum amount limitations found in the current Federal Express Service Guide apply. Your right to recover from Federal Express for any loss, including intrinsic value of the package, loss of sales, income interest, profit, attorney's fees, costs, and other forms of damage whether direct, incidental, consequential, or special is limited to the greater of $100 or the declared value specified to the left. Recovery cannot exceed actual documented loss. The maximum Declared Value for FedEx Letter and FedEx Pak packages is $100.00.

In the event of untimely delivery, Federal Express will at your request and with some limitations, refund all transportation charges paid. See Service Guide for further information.

Sender authorizes Federal Express to deliver this shipment without obtaining a delivery signature and shall indemnify and hold harmless Federal Express from any claims resulting therefrom.

5 Release Signature:

Base Charges
Other 1
Other 2
Total Charges

REVISION DATE 8/9
PART #119501
FORMAT #041
041
© 1990 FEC PRINTED IN U.S.A.

SENDER'S COPY

ENVIRONMENTAL PROTECTION AGENCY
Office of Enforcement

REGION 5
230 South Dearborn Street
Chicago, Illinois 60604

CHAIN OF CUSTODY RECORD

Cooler #

PROJ. NO.	PROJECT NAME
FIL0417	F05-8912-090 CASE: 16377

SAMPLERS: (Signature) J. Rodiny

STA. NO.	DATE	TIME	COMP.	GRAB	STATION LOCATION	NO. OF CONTAINERS	80 oz Amber-Pest (PCB/HBN)	40ml-VOA (HCl)				REMARKS
												Tag numbers: Low conc matrix
~~EHE45~~				X	~~MW6~~	~~4~~	~~2~~	~~2~~				~~163119-120~~ 163123-124 groundwater
~~EJW94~~				X	~~Dup~~	~~4~~	~~2~~	~~2~~				~~163125-126~~, 163129-130 groundwater
~~EJW99~~				X	~~Blank~~	~~4~~	~~2~~	~~2~~				~~163131-132~~, 163135-136 groundwater
												Lot numbers:
												80 oz:
												40 mL:
												(OTR in cooler #).

NOID

Relinquished by: (Signature)	Date / Time	Received by: (Signature)	Relinquished by: (Signature)	Date / Time	Received by: (Signature)
Relinquished by: (Signature)	Date / Time	Received by: (Signature)	Relinquished by: (Signature)	Date / Time	Received by: (Signature)
Relinquished by: (Signature)	Date / Time	Received for Laboratory by: (Signature)	Date / Time		

Remarks
Shipped via Fed Ex to PEI
Air bill #:
Custody Seals: 35239, 35240

Distribution: White — Accompanies Shipment; Pink — Coordinator Field Files; Yellow — Laboratory File

5-07985

ENVIRONMENTAL PROTECTION AGENCY
Office of Enforcement

REGION 5
230 South Dearborn Street
Chicago, Illinois 60604

CHAIN OF CUSTODY RECORD

Cooler #180

PROJ. NO.: FIL047
PROJECT NAME: F05-8912-090 CASE: 16377
SAMPLERS: (Signature) J. Rodiger

STA. NO.	DATE	TIME	COMP.	GRAB	STATION LOCATION	NO. OF CONTAINERS	80oz Amber - Pest/PCN/ABN	40ml - VOA (HCl)					REMARKS: TAG Numbers	Low conc matrix
EHW91	5/9/91	12:30		X	MW3	4	2	2					163101-102, 163105-106	groundwater
EHW92	5/9/91	12:00		X	MW4	4	2	2					163107-108, 163111-112	groundwater
~~EHF44~~				X	~~MW5~~	~~4~~	~~2~~	~~2~~					~~163113-114, 163117-118~~	~~groundwater~~
EHJ94	5/9/91	11:30		X	Dup	4	2	2					163125-126, 163129-130	groundwater

Lot numbers:
80 oz: 0211043
40 mL: B0171033
(OTR in cooler #1)

Relinquished by: (Signature)	Date / Time	Received by: (Signature)	Relinquished by: (Signature)	Date / Time	Received by: (Signature)
J. Rodiger	5/9/91 4:00 pm				
Relinquished by: (Signature)	Date / Time	Received by: (Signature)	Relinquished by: (Signature)	Date / Time	Received by: (Signature)
Relinquished by: (Signature)	Date / Time	Received for Laboratory by: (Signature)	Date / Time	Remarks	

Shipped via Fed Ex to PEI
Air bill #: 9295286781
Custody Seals: 163500, 35238

Distribution: White — Accompanies Shipment; Pink — Coordinator Field Files; Yellow — Laboratory File

5- 08877

ENVIRONMENTAL PROTECTION AGENCY
Office of Enforcement

REGION 5
230 South Dearborn Street
Chicago, Illinois 60604

CHAIN OF CUSTODY RECORD

Cooler # 1

PROJ. NO.: FIL0417

PROJECT NAME: TDD: FOS-8912-090
CASE: 16377

SAMPLERS: (Signature) J. Rodriguez

STA. NO.	DATE	TIME	COMP.	GRAB	STATION LOCATION	NO. OF CONTAINERS	80 oz. Ambers - Pest/PCB/ABN	40 ml - VOA (ACC)					REMARKS: TAG Numbers	Low conc: matrix
FKX66	5/9/91	11:30		X	MW1	4	2	2					163083-84, 163087-88	groundwater
FMN98	5/9/91	10:20		X	MW2 & MSD	10	4	6					163089-90, 163093-100	groundwater
FJW99	5/9/91	1:00		X	Blank	4	2	2					163131-132, 163135-136	groundwater

Lot numbers:
80 oz: 0232033
0211043
40 ml: B0193043
B0171033

(OTR in Cooler # 1)

Relinquished by: (Signature)	Date / Time	Received by: (Signature)	Relinquished by: (Signature)	Date / Time	Received by: (Signature)
J. Rodriguez	5/9/91 16:00				
Relinquished by: (Signature)	Date / Time	Received by: (Signature)	Relinquished by: (Signature)	Date / Time	Received by: (Signature)
Relinquished by: (Signature)	Date / Time	Received for Laboratory by: (Signature)	Date / Time		

Remarks: Shipped via FedEx to PEI
Airbill # 9295286781
Custody Seal #s: 32052, 163499

Distribution: White — Accompanies Shipment; Pink — Coordinator Field Files; Yellow — Laboratory File

5- 08660

EPA

United States Environmental Protection Agency
Contract Laboratory Program Sample Management Office
PO Box 818 Alexandria, VA 22313
703-557-2490 FTS 557-2490

Organic Traffic Report
(For CLP Use Only)

Case Number: 16377
SAS No. (if applicable): N/A

1. Type of Activity (Check one): [ ] ENF [ ] NPLD [ ] RA [X] SI [ ] STSI [ ] ER [ ] O&M [ ] RD [ ] ST [ ] Other *(Specify)* [ ] ESI [ ] PA [ ] RIFS [ ] STPA

2. Region Number: V
Sampling Co.: FIT
Sampler (Name): Tim Rodriguez

4. Date Shipped: 5/9/91
Airbill Number: 9295286781
Carrier: F

5. Sample Description *(Enter in Column A)*
1. Surface Water
2. Ground Water
3. Leachate
4. Rinsate
5. Soil/Sediment
6. Oil (SAS)
7. Waste (SAS)
8. Other (SAS) *(Specify)*

Non-Superfund Program: —

Site Name: Metro Disposal Systems, Inc
City, State: Fairmont City, IL
Site Spill ID: N/A

3. Ship To: PEI
11499 Chester Rd.
Cincinnati, OH 45246
Attn: Jon Sonderman

Triple volume required for matrix spike/duplicate aqueous sample.

Ship medium and high concentration samples in paint cans.

See reverse for additional instructions.

CLP Sample Number *(From labels)*	(A) Sample Description *(From box 1)*	(B) Concentration L=low M=med H=high	(C) RAS Analysis VOA	(C) BNA	(C) Pest/PCB	(D) Special Handling	(E) Station Location	(F) Date/Time of Sample Collection		(G) Corresponding CLP Inorganic Sample Number	
EKX66	2	L	X	X	X		MW1	5/9/91	11:30	MELP99	
EMN98	2	L	X	X	X	MSD	MW2	5/9/91	10:20	MELT91	
EHW91	2	L	X	X	X		MW3	5/9/91	12:30	MELT92	
EHW92	2	L	X	X	X		MW4	5/9/91	12:00	MELT93	
~~EHE44~~	~~2~~	~~L~~		~~X~~	~~X~~		~~MW5~~			~~MELT94~~	tr
~~EHE45~~	~~2~~	~~L~~		~~X~~	~~X~~		~~MW6~~			~~MELT95~~	tr
EJW94	2	L	X	X	X		Dup	5/9/91	11:30	MELT96	
EJW99	4	L	X	X	X	Blank	Blank	5/9/91	13:00	MELT97	

Shipment (is) / ~~is not~~ Complete.

EPA Form 9110-2 (8-88) Replaces EPA Form 2075-7, which may be used. Blue - SMO Copy Pink - Region Copy White - Lab Copy for Return to SMO Yellow - Lab Copy

ENVIRONMENTAL PROTECTION AGENCY
Office of Enforcement

REGION 5
230 South Dearborn Street
Chicago, Illinois 60604

CHAIN OF CUSTODY RECORD

Cooler # 128

PROJ. NO.: FIL0417
PROJECT NAME: TDD: F05-8912-090 CASE: 16377
SAMPLERS: (Signature) J. Rodriguez

STA. NO.	DATE	TIME	COMP.	GRAB	STATION LOCATION	NO. OF CONTAINERS	1L Plastic-Metals (HNO3)	1L Plastic-CN- (NaOH)					REMARKS: TAG numbers	Low Conc matrix
MELT99	5/9/91	11:30		X	MW1	2	1	1					163085-86	groundwater
MELT91	5/9/91	10:20		X	MW2	2	1	1					163091-92	groundwater
MELT92	5/9/91	12:30		X	MW3	2	1	1					163103-104	groundwater
MELT93	5/9/91	12:00		X	MW4	2	1	1					163109-10	groundwater
~~MELT94~~				~~X~~	~~MW5~~	~~2~~	~~1~~	~~1~~					163115-16	groundwater
~~MELT95~~				~~X~~	~~MW6~~	~~2~~	~~1~~	~~1~~					163121-22	groundwater
MELT96	5/9/91	11:30		X	Dupl.	2	1	1					163127-28	groundwater
MELT97	5/9/91	1300		X	Blank	2	1	1					163133-34	groundwater
													Lot numbers:	
													1 L Plastic: 319023	
					(ITR in cooler # 128).									

Relinquished by: (Signature)	Date / Time	Received by: (Signature)	Relinquished by: (Signature)	Date / Time	Received by: (Signature)
J. Rodriguez	5/9/91 16:00				
Relinquished by: (Signature)	**Date / Time**	**Received by: (Signature)**	**Relinquished by: (Signature)**	**Date / Time**	**Received by: (Signature)**
Relinquished by: (Signature)	**Date / Time**	**Received for Laboratory by: (Signature)**	**Date / Time**	**Remarks:** Shipped via Fed Ex to DATAC Airbill #: 9295286792 Custody Seals: 32050, 32051	

Distribution: White — Accompanies Shipment; Pink — Coordinator Field Files; Yellow — Laboratory File

5. 09659

EPA

United States Environmental Protection Agency
Contract Laboratory Program Sample Management Office
PO Box 818 Alexandria, VA 22313
703-557-2490 FTS 557-2490

Inorganic Traffic Report
(For CLP Use Only)

Case Number: 16577
SAS No. (if applicable): N/A

1. Type of Activity (Check one)
☐ ENF ☐ NPLD ☐ RA ☒ SI ☐ STSI
☐ ER ☐ O&M ☐ RD ☐ ST ☐ Other *(Specify)*
☐ ESI ☐ PA ☐ RIFS ☐ STPA

Non-Superfund Program: —

Site Name: Metro Disposal Systems, Inc.

City, State: Fairmont City, IL

Site Spill ID: N/A

2. Region Number: V

Sampling Co.: FIT

Sampler (Name): Tim Rodriguez

3. Ship To:
DATAC
960 W. LeVoy Drive
Salt Lake City, UT 84123
Attn: Lee Harris

4. Date Shipped: 5/9/91

Carrier: F

Airbill Number: 9295286792

Double volume required for matrix spike/duplicate aqueous sample.

Ship medium and high concentration samples in paint cans.

See reverse for additional instructions.

5. Sample Description *(Enter in Column A)*
1. Surface Water
2. Ground Water
3. Leachate
4. Rinsate
5. Soil/Sediment
6. Oil (SAS)
7. Waste (SAS)
8. Other (SAS) *(Specify)*

CLP Sample Number *(From labels)*	(A) Sample Description *(From box 5)*	(B) Concentration L=low M=med H=high	(C) List Preservative Used/Vol	(D) RAS Analysis: ~~Total or Dissolved~~ Metals	(D) Cyanide	(D) Low Conc. Sow: Nitrate/Nitrite	(D) Low Conc. Sow: Fluoride	(E) Special Handling	(F) Station Location	(G) Date/Time of Sample Collection	(H) Corresponding Organic Sample Number
MELP99	2	L	N	X	X				MW1	5/9/91 11:30	EKX66
MELT91	2	L	N	X	X			~~MH~~	MW2	5/9/91 10:20	EMN98
MELT92	2	L	N	X	X				MW3	5/9/91 12:30	EHW91
MELT93	2	L	N	X	X				MW4	5/9/91 12:00	EHW92
~~MELT94~~	~~2~~	~~L~~		~~X~~	~~X~~				~~MW5~~		~~EHE44~~
~~MELT95~~	~~2~~	~~L~~		~~X~~	~~X~~				~~MW6~~		~~EHE45~~
MELT96	2	L	N	X	X				Dup	5/9/91 11:30	EJW94
MELT97	4	L	N	X	X			Blank	Blank	5/9/91 13:00	EJW99

Shipment (is) / ~~is not~~ Complete.

EPA Form 9110-1 (11-89) Replaces EPA Form 2075-6, which may be used. Green - Region Copy Pink - SMO Copy White - Lab Copy for Return to SMO Yellow - Lab Copy

United States Environmental Protection Agency
Contract Laboratory Program Sample Management Office
PO Box 818 Alexandria, VA 22313
703-557-2490 FTS 557-2490

EPA

Organic Traffic Report
(For CLP Use Only)

Case Number: 16377
SAS No. (if applicable): N/A

1. Type of Activity (Check one): ENF, NPLD, RA, [X] SI, STSI, ER, O&M, RD, ST, Other *(Specify)*, ESI, PA, RIFS, STPA

2. Region Number: V
Sampling Co.: FIT
4. Date Shipped: 5/8/91
Airbill Number: 9295286766
Sampler (Name): Jim Rodriguez
Carrier: F

Non-Superfund Program: —
Site Name: Metro Disposal Systems, Inc
City, State: Fairmont City, IL
Site Spill ID: N/A

3. Ship To: PEI
11499 Chester Rd.
Cincinnati, OH 45246
Attn: Jon Sonderman

Triple volume required for matrix spike/duplicate aqueous sample.

Ship medium and high concentration samples in paint cans.

See reverse for additional instructions.

5. Sample Description *(Enter in Column A)*
1. Surface Water
2. Ground Water
3. Leachate
4. Rinsate
5. Soil/Sediment
6. Oil (SAS)
7. Waste (SAS)
8. Other (SAS) *(Specify)*

CLP Sample Number *(From labels)*	(A) Sample Description *(From box 1)*	(B) Concentration L=low M=med H=high	(C) RAS Analysis VOA	BNA	Pest/PCB	(D) Special Handling	(E) Station Location	(F) Date/Time of Sample Collection		(G) Corresponding CLP Inorganic Sample Number
ES387	5	L	N	X	X		S1	5/8/91	12:30	MEHA93
ES388	5	L	N	X	X		S2	5/8/91	12:45	MEHA94
ES389	5	L	N	X	X		S3	5/8/91	12:50	MEHA95
ES390	5	L	N	X	X		S4	5/8/91	1:00	MEHA96
ES391	5	L	N	X	X		S5	5/8/91	1:20	MEHA97
EHW88	5	L	N	X	X		S6	5/8/91	15:03	MEHA98
EHW89	5	L	N	X	X		S7	5/8/91	15:00	MEHA99
EHW90	5	L	N	X	X		S8	5/8/91	13:45	MELP98
EKF57	3	M-L	N	X	X		LW1	5/8/91	16:45	MELT98
EHM01	3	M-L	N	X	X	~~MSD~~	LW2	5/8/91	16:00	MELT99
EHM03	3	M-L	N	X	X		Dup	5/8/91	16:45	MEKN02
EHM04	3	L	N	X	X	Blank	Blank	5/8/91	16:30	MEKN03
EHM02	3	M-L	N	X	X	MSD	LW2	5/8/91	16:00	—

Shipment (15) ~~is not~~ complete.

EPA Form 9110-2 (8-88) Replaces EPA Form 2075-7, which may be used. Blue - SMO Copy Pink - Region Copy White - Lab Copy for Return to SMO Yellow - Lab Copy

EPA

United States Environmental Protection Agency
Contract Laboratory Program Sample Management Office
PO Box 818 Alexandria, VA 22313
703-557-2490 FTS 557-2490

Inorganic Traffic Report
(For CLP Use Only)

Case Number: 16377
SAS No. (if applicable): N/A

1. Type of Activity (Check one): ☐ ENF ☐ NPLD ☐ RA ☑ SI ☐ STSI ☐ ER ☐ O&M ☐ RD ☐ ST ☐ Other (Specify) ☐ ESI ☐ PA ☐ RIFS ☐ STPA

Non-Superfund Program: —

Site Name: Metro Disposal Systems, Inc

City, State: Fairmont City, IL

Site Spill ID: N/A

2. Region Number: V

Sampling Co.: FIT

Sampler (Name): Tim Rodriguez

3. Ship To: DATAC
960 W LeVoy Drive
Salt Lake City, UT 84123
Attn: Lee Harris

4. Date Shipped: 5/8/91

Carrier: F

Airbill Number: 9295286170

Double volume required for matrix spike/duplicate aqueous sample.

Ship medium and high concentration samples in paint cans.

See reverse for additional instructions.

5. Sample Description (Enter in Column A)
1. Surface Water
2. Ground Water
3. Leachate
4. Rinsate
5. Soil/Sediment
6. Oil (SAS)
7. Waste (SAS)
8. Other (SAS) (Specify)

CLP Sample Number (From labels)	(A) Sample Description (From box 5)	(B) Concentration L=low M=med H=high	(C) List Preservative Used/Vol	(D) RAS Analysis: Total ~~or Dissolved~~ Metals	(D) Cyanide	(D) Low Conc. Sow: Nitrate/Nitrite	(D) Low Conc. Sow: Fluoride	(E) Special Handling	(F) Station Location	(G) Date/Time of Sample Collection		(H) Corresponding Organic Sample Number
MEHA93	5	L	N/A	X	X				S1	5/8/91	12:30	ES387
MEHA94	5	L	N/A	X	X				S2	5/8/91	12:45	ES388
MEHA95	5	L	N/A	X	X				S3	5/8/91	12:50	ES389
MEHA96	5	L	N/A	X	X				S4	5/8/91	1:00	ES390
MEHA97	5	L	N/A	X	X				S5	5/8/91	1:20	ES391
MEHA98	5	L	N/A	X	X				S6	5/8/91	15:09	EHW88
MEHA99	5	L	N/A	X	X				S7	5/8/91	15:00	EHW89
MELP98	5	L	N/A	X	X				S8	5/8/91	13:45	EHW90
MELT98	3	L-M	N/A	X	X				LW1	5/8/91	16:45	EKF57
MELT99	3	L-M	N/A	X	X			~~MSD~~	LW2	5/8/91	16:00	~~EHM02~~ EHM01
									~~LW2/1~~			
MEICN02	3	L-M	N/A	X	X				Dup	5/8/91	16:45	EHM03
MEICN03	3	L-M	N/A	X	X			Blank	Blank	5/8/91	16:30	EHM04

Shipment (no) ~~to note~~ Complete.

EPA Form 9110-1 (11-89) Replaces EPA Form 2075-6, which may be used. Green - Region Copy Pink - SMO Copy White - Lab Copy for Return to SMO Yellow - Lab Copy

ENVIRONMENTAL PROTECTION AGENCY
Office of Enforcement

~~PAGE 2~~ tr

CHAIN OF CUSTODY RECORD

Cooler # 108

REGION 5
230 South Dearborn Street
Chicago, Illinois 60604

PROJ. NO.	PROJECT NAME	CASE
EHM017	TDD: F05-8912-090	16377

SAMPLERS: (Signature) J. Rodriguez

STA. NO.	DATE	TIME	COMP.	GRAB	STATION LOCATION	NO. OF CONTAINERS	80 oz. Ambers-Post/PCB/ABN	40 mL - VOA (HCl)					REMARKS TAG Numbers	Low-Med Conc Matrix
EHF57	5/8/91	16:45		X	LW1	4	2	2					163137-38, 163141-42	groundwater
EHM01-02	5/8/91	16:00		X	LW2 & MSD (EHM02)	10	4	6					163143-44, 163147-50, 163153-54	groundwater
EHM03	5/8/91	16:45		X	Dup	4	2	2					163155-56, 163159-60	groundwater
EHM04	5/8/91	11:30		X	Blank	4	2	2					163161-62, 163165-66	groundwater

Lot number:
80 oz: 0232033, 0211043
40 ml: B0193033
B0193043

244 tr
OTR in Cooler ~~108~~

Relinquished by: (Signature)	Date / Time	Received by: (Signature)	Relinquished by: (Signature)	Date / Time	Received by: (Signature)
J. Rodriguez	5/8/91 20:30				
Relinquished by: (Signature)	Date / Time	Received by: (Signature)	Relinquished by: (Signature)	Date / Time	Received by: (Signature)
Relinquished by: (Signature)	Date / Time	Received for Laboratory by: (Signature)	Date / Time		

Remarks: Shipped via FedEx to PEI
Airbill # 9295286766
Custody Seals: 35241 35242

Distribution: White — Accompanies Shipment; Pink — Coordinator Field Files; Yellow — Laboratory File

5- 09891

ENVIRONMENTAL PROTECTION AGENCY
Office of Enforcement

Organics

REGION 5
230 South Dearborn Street
Chicago, Illinois 60604

CHAIN OF CUSTODY RECORD

Cooler # 244

PROJ. NO.: FIL0417
PROJECT NAME: TDD: F05-8912-090 / CASE: 16377
SAMPLERS: (Signature) J. Rodriguez

STA. NO.	DATE	TIME	COMP.	GRAB	STATION LOCATION	NO. OF CONTAINERS	8 oz - ABN/PEST/PCB	120 ml - VOA					REMARKS: TAG Numbers	Low Conc Matrix
ES387	5/8/91	12:30		X	S1	3	1	2					163051, 163053-54	Soil
ES388	5/8/91	12:45		X	S2	3	1	2					163055, 163057-58	Soil
ES389	5/8/91	12:50		X	S3	3	1	2					163059, 163061-62	Soil
ES390	5/8/91	1:00		X	S4	3	1	2					163063, 163065-66	Soil
ES391	5/8/91	1:20		X	S5	3	1	2					163067, 163069-70	Soil
EHW88	5/8/91	15:03		X	S6	3	1	2					163071, 163073-74	Soil
EHW89	5/8/91	15:00		X	S7	3	1	2					163075, 163077-78	Soil
EHW90	5/8/91	13:45		X	S8	3	1	2					163079, 163081-82	Soil

Lot numbers:
8 oz: 1052037
120 ml: W0318043
W0378013

(OTR in cooler # 244)

Relinquished by: (Signature)	Date / Time	Received by: (Signature)	Relinquished by: (Signature)	Date / Time	Received by: (Signature)
J. Rodriguez	5/8/91 20:30				
Relinquished by: (Signature)	Date / Time	Received by: (Signature)	Relinquished by: (Signature)	Date / Time	Received by: (Signature)
Relinquished by: (Signature)	Date / Time	Received for Laboratory by: (Signature)	Date / Time	Remarks: Shipped via FEDEX to PEI Airbill #: 9295296766 Custody Seals: 32046, 32047	

Distribution: White — Accompanies Shipment; Pink — Coordinator Field Files; Yellow — Laboratory File

5- 05579

ENVIRONMENTAL PROTECTION AGENCY
Office of Enforcement

PAGE 2/2

CHAIN OF CUSTODY RECORD

Cooler: 299

REGION 5
230 South Dearborn Street
Chicago, Illinois 60604

PROJ. NO.: FIL0417

PROJECT NAME: TDD: F05-8912-090 CASE 16377

SAMPLERS: (Signature) J. Rodriguez

STA. NO.	DATE	TIME	COMP.	GRAB	STATION LOCATION	NO. OF CONTAINERS	1L Plastics / Metals	1L Plastics / CN-					REMARKS: TAG numbers:	Low-Med Conc. Matrix
MEL49X	5/8/91	1645		X	~~MW~~ LW1	2	1	1					163139; 163140	Groundwater
MEL199	5/8/91	1600		X	LW2	2	1	1					163145-46	Groundwater
MEKN02	5/8/91	16:45		X	Dup	2	1	1					163157-58	Groundwater
MEKN03	5/8/91	16:30		X	Blank	2	1	1					163163-64	Groundwater

Lot numbers:
1 Liter plastics: 0319023

(ITR in cooler #299)

Relinquished by: (Signature)	Date / Time	Received by: (Signature)	Relinquished by: (Signature)	Date / Time	Received by: (Signature)
J. Rodriguez	5/8/91 10:30				
Relinquished by: (Signature)	Date / Time	Received by: (Signature)	Relinquished by: (Signature)	Date / Time	Received by: (Signature)
Relinquished by: (Signature)	Date / Time	Received for Laboratory by: (Signature)	Date / Time	Remarks: Shipped via FedEx to DATAC Airbill # 9295286770 Custody seals: 32048, 32049	

Distribution: White — Accompanies Shipment; Pink — Coordinator Field Files; Yellow — Laboratory File

5-09269

ENVIRONMENTAL PROTECTION AGENCY
Office of Enforcement

Inorganics - PAGE 1/2 Cooler # 299

CHAIN OF CUSTODY RECORD

REGION 5
230 South Dearborn Street
Chicago, Illinois 60604

PROJ. NO.: FIL0417
PROJECT NAME: TDD: F05-8912-090 CASE: 16377
SAMPLERS: (Signature) J. Rodriguez

STA. NO.	DATE	TIME	COMP.	GRAB	STATION LOCATION	NO. OF CONTAINERS	8oz - Metals/Cyanide						REMARKS: TAG number	Low Conc. Matrix
MEHA93	5/8/91	1730		X	S1	1	1						163052	Soil
MEHA94	5/8/91	1245		X	S2	1	1						163056	Soil
MEHA95	5/8/91	11:50		X	S3	1	1						163060	Soil
MEHA96	5/8/91	1:00		X	S4	1	1						163064	Soil
MEHA97	5/8/91	1:20		X	S5	1	1						163068	Soil
MEHA98	5/8/91	15:03		X	S6	1	1						163072	Soil
MEHA99	5/8/91	15:00		X	S7	1	1						163076	Soil
MELD98	5/8/91	13:45		X	S8	1	1						163080	Soil

Lot Numbers:
8 oz: 1052032

(ITR in cooler # 299)

Relinquished by: (Signature)	Date / Time	Received by: (Signature)	Relinquished by: (Signature)	Date / Time	Received by: (Signature)
J. Rodriguez	5/8/91 2030				
Relinquished by: (Signature)	Date / Time	Received by: (Signature)	Relinquished by: (Signature)	Date / Time	Received by: (Signature)
Relinquished by: (Signature)	Date / Time	Received for Laboratory by: (Signature)	Date / Time	Remarks: Shipped Via Fed Ex to DATAC Airbill #: 9295286770 Custody seals: 32048, 32049	

Distribution: White — Accompanies Shipment; Pink — Coordinator Field Files; Yellow — Laboratory File

metro Disposal

TDD: F05-8912-020
PAN: FIL0917

1 OF ___

Extractables - Pest/PCB
- ABN

SAMPLE NO.	DATE	TIME	BOTTLES	TAG NO.	OTR	ITR	DESCRIPTION
S1	5/8/91	12:30	Extract. 8oz	163 051	ES387		Sediment dark brown
S1		12:30	m/CN 8oz	163 052		MEHA93	wet
S1		12:30	VOA 120ml	163 053	ES387		
S1		12:30	VOA 120ml	163 054	ES387		
S2		12:45	Ext. } 8oz	163 055	ES388		Sediment
S2		12:45	m/CN }	056		MEHA94	- dark brown
S2		12:45	VOA } 120ml	057	ES388		wet
S2		12:45	VOA }	058	ES 388		
S3		12:50	Ext } 8oz	059	ES389		dark moist
S3			M/CN }	060		MEHA95	organic
S3			VOA } 120ml	061	ES389		w/ pebbles, small
S3			VOA }	062	ES389		rocks.
S4		1:00	Ext } 8oz	063	ES390		dark moist
S4			M/CN }	064		MEHA96	organic soil
S4			VOA } 120ml	065	ES390		
S4			VOA }	066	ES390		
S5		1:20	Ext } 8oz	067	ES391		dark rich brown
S5			M/CN }	068		MEHA97	sediment
S5			VOA } 120ml	069	ES391		(wet)
S5			VOA }	070	ES391		

TDD: _____

PAN: _____

____ OF ____

SAMPLE NO.	DATE	TIME	BOTTLES	TAG NO.	OTR	ITR	DESCRIPTION
S6	5/8/91	1503	Ext	163071	EHW88		(dark rich
S6			M/CN 8oz	072		MEHA98	organic soil
S6			VOA 120ml	073	EHW88		(wet) sed
S6			VOA	074	EHW88		soil)
S7		1500	Ext	075	EHW89		sed dark, rich
S7		"	M/CN- 8oz	076		MEHA99	wet (clay).
S7			VOA	077	EHW89		
S7			VOA	078	EHW89		
S8		1:45	Ext	079	EHW90		brown, organic
S8			M/CN-	080		MELP98	soil
S8			VOA	081	EHW90		
S8			VOA	082	EHW90		

TDD: _____

PAN: _____

____ OF ____

SAMPLE NO.	DATE	TIME	BOTTLES	TAG NO.	OTR	ITR	DESCRIPTION
MW1	5/9/91	11:30	Ext 8002	163083	EKX66		temp 13°C
(0232033)			Ext 8002	163084	EKX66		pH 6.08
(319023)			M/~~CN~~	085		MELP99	Cond 1334
			~~M~~/CN	086		MELP99	
B0193043			VOA	087	EKX66		
B0171033			VOA	088	EKX66		
MW2	5/9	10:20	E	089	EMN98		temp 14°C
(0232033)			E	090	EMN98		pH 6.27
(319023)			M/CN	091		MELT91	Cond 4520
			M/CN	092		MELT91	
~~B0171033~~			VOA	093	EMN98		
B0171033			VOA	094	EMN98		
MW2-MSD	5/9/91	10:20	E	095	EMN98		temp 14°C
(0232033)			E	096	EMN98		pH 6.27
(319023)			VOA	097	EMN98	~~MELT92~~	Cond 4520
			VOA	098	EMN98	~~MELT92~~	
B0171033			VOA	099	EMN98		
B0171033			VOA	163100	EMN98		

Ed
A #'s
8002-6
VOA-8

TDD: _____

PAN: _____

____ OF ____

SAMPLE NO.	DATE	TIME	BOTTLES	TAG NO.	OTR	ITR	DESCRIPTION
MW3		12:30	E	163 101	EHW91		temp ~~15.0~~ 15 °C
(0211043)			E	102	EHW91		pH ~~7.09~~ 8.6
			M	103		MELT92	cond ~~7.09~~ 1326
			CN	104		MELT92	
			VOA	105	EHW91		
			VOA	106	EHW91		
MW4		12:00	E	107	EHW92		temp 15°C
(0211043)			E	108	EHW92		pH 7.09
			M	109		MELT93	cond 7.99
			CN⁻	110		MELT93	
			VOA	111	EHW92		
			VOA	112	EHW92		
MW5			E	113	EHE44		
			E	114	EHE44		
			M	115		MELT94	
			CN⁻	116		MELT94	
			VOA	117	EHE44		
			VOA	118	EHE44		

TDD: _____
PAN: _____

____ OF ____

SAMPLE NO.	DATE	TIME	BOTTLES	TAG NO.	OTR	ZTR	DESCRIPTION
MW6			E	163.119	EHE45		
			E	120	EHE45		
			M	121		MELT95	
			CN	122		MELT95	
			VOA	123	EHE45		
			VOA	124	EHE45		
Dup (MW) ~~MW7~~		11:30	E	125	EJW94		temp 13°C
(0211043)			E	126	EJW94		pH 6.08
			M	127		MELT96	cond 1334
			CN	128	~~EJW94~~	MELT96	
			VOA	129	EJW94		
			VOA	130	EJW94		
Blank		1:00	E	131	EJW99		temp 18°C
(0211043)			E	132	EJW99		pH 6.71
			M	133		MELT97	cond 813
			CN	134		MELT97	
			VOA	135	EJW99		
			VOA	136	EJW99		
BL							
Dup							
MSD - no preservatives							

TDD: _____

PAN: _____

____ OF ____

SAMPLE NO.	DATE	TIME	BOTTLES	TAG NO.	OTR	ZTR	DESCRIPTION
LW1	5/8/91	16:45 ~~1600~~	80 oz-E	163137	EKF57		0232033
			-E	163138	EKF57		
			-M	139		MELT98	
			-CN⁻	140		MELT98	
			VOA	141	EKF57		B0193033 3043
			VOA	142	EKF57		
LW2		1600	E	163143	EHM01		0232033
			E	163144	EHM01		
			M	145		MELT99	
			CN⁻	146		MELT99	
			VOA	147	EHM01		
			VOA	148	EHM01		
LW2/MSD			80-E	163149	EHM02		0211043
			E	150	EHM02		
			VOA	151			
			VOA	152			
			VOA	153			
			VOA	154			

TDD: _____

PAN: _____

____ OF ____

SAMPLE NO.	DATE	TIME	BOTTLES	TAG NO.	OTR	ITR	DESCRIPTION
Dup (#1)	5/8/91	16:45	E	163155	EHMO3		0211043 dark, separated
			E	156	EHMO3		0211043
			M	157		MEKNO2	
			CN^-	158			
			VOA	159	EHMO3		
			VOA	160			
Blank		16:30	E	163161	EHMO4		Lot #5.1A 0232033
			E	162			
			M	163		MEKNO3	0319023 ✓
			CN^-	164			
			VOA	165			B0193033 OK
			VOA	166			B0193043

L 401 R05-8505-06 IL0417-08 me

Time Collected: 7:50 AM

Date Collected: 4-29-82

Lab # DC24618

SPECIAL ANALYSIS FORM

Date Received APR 29 1982

ILLINOIS ENVIRONMENTAL PROTECTION AGENCY
DIVISION OF LAND/NOISE POLLUTION CONTROL

COUNTY:	FILE HEADING:	FILE NUMBER:
ST. CLAIR	FAIRMONT CITY/METRO	16305001

SOURCE OF SAMPLE: (Exact Location)

LEACHATE WELL L401

PHYSICAL OBSERVATIONS, REMARKS:

CLOUDY - OIL FLOATING ON TOP
LEACHATE AND OIL ODOR

TESTS REQUESTED: PCB'S

COLLECTED BY: D. TOLAN, K. BOSIE, R. HERSEMANN

TRANSPORTED BY: K. BOSIE

LABORATORY

RECEIVED BY: S.B.

DATE COMPLETED: 5/26/82

DATE FORWARDED: 5/26/82 J Hurley

PCB 1.2 ug/L

RECEIVED
MAY 26 1982
E.P.A. — D.L.P.C.
STATE OF ILLINOIS

LPC-8A 4/77

(NOT FOR DATA PROCESSING)

DC24618

L 402

mR

Time Collected: 7:25 A.M.

Lab # D024619

SPECIAL ANALYSIS FORM

Date Collected: 4-29-82

Date Received APR 29 1982

ILLINOIS ENVIRONMENTAL PROTECTION AGENCY
DIVISION OF LAND/NOISE POLLUTION CONTROL

COUNTY:	FILE HEADING:	FILE NUMBER:
ST. CLAIR	FAIRMONT CITY/METRO	1630500 1

SOURCE OF SAMPLE: (Exact Location)

LEACHATE WELL L 402

PHYSICAL OBSERVATIONS, REMARKS:

CLOUDY, STRONG LEACHATE ODOR

TESTS REQUESTED: PCB'S

COLLECTED BY: D. TOLAN, K. BOSIE, R. HERSEMANN

TRANSPORTED BY: K. BOSIE

LABORATORY

RECEIVED BY: S.B.

DATE COMPLETED: 5/26/82

DATE FORWARDED: 5/26/82

J Hurley

RECEIVED

MAY 26 1982

E.P.A. — D.L.P.C.

~~STATE OF ILLINOIS~~

LPC-8A 4/77

(NOT FOR DATA PROCESSING)

D024619

G11S

me

Time Collected: 11:55 A.M

Date Collected: 4/29/82

Lab # D024620

SPECIAL ANALYSIS FORM

Date Received APR 29 1982

ILLINOIS ENVIRONMENTAL PROTECTION AGENCY
DIVISION OF LAND/NOISE POLLUTION CONTROL

COUNTY:	FILE HEADING:	FILE NUMBER:
ST. CLAIR	FAIRMONT CITY /METRO	16305001

SOURCE OF SAMPLE: (Exact Location)

MONITOR WELL G11S

PHYSICAL OBSERVATIONS, REMARKS:

CLEAR, NO ODOR

TESTS REQUESTED: PCB's

COLLECTED BY: D. TOLAN, K. BOSIE, R. HERSEMANN

TRANSPORTED BY: K. BOSIE

LABORATORY

RECEIVED BY: S.B

DATE COMPLETED: 5/26/82

DATE FORWARDED: 5/26/82

J Hurley

[illegible]

RE[illegible]ED

MAY 26 1982

[illegible] LPC.
STATE OF ILLINOIS

LPC-8A 4/77

(NOT FOR DATA PROCESSING)

D024620

G11D

MR

D024621

Time Collected: 11:50 A.m.

Date Collected: 4/29/82

Lab #

SPECIAL ANALYSIS FORM

Date Received APR 29 1982

ILLINOIS ENVIRONMENTAL PROTECTION AGENCY
DIVISION OF LAND/NOISE POLLUTION CONTROL

COUNTY:	FILE HEADING:	FILE NUMBER:
ST. CLAIR	FAIRMONT CITY / METRO	16305001

SOURCE OF SAMPLE: (Exact Location)

MONITOR WELL G11D

PHYSICAL OBSERVATIONS, REMARKS:

CLEAR, SULFUR ODOR

TESTS REQUESTED: PCB's

COLLECTED BY: D. TOLAN, K. BOSIE, R. HERSEMANN

TRANSPORTED BY: K. BOSIE

LABORATORY

RECEIVED BY: SB

DATE COMPLETED: 5/26/82

DATE FORWARDED: 5/26/82

J Hurley

PCB < 0.1 ug/l

RECEIVED
MAY 26 1982
E.P.A. — C.L.P.C.
STATE OF ILLINOIS

LPC-8A 4/77

(NOT FOR DATA PROCESSING)

D024621

G14S

mR

Time Collected: 11:25 Am

Date Collected: 4/29/82

Lab # D024622

SPECIAL ANALYSIS FORM

Date Received APR 29 1982

ILLINOIS ENVIRONMENTAL PROTECTION AGENCY
DIVISION OF LAND/NOISE POLLUTION CONTROL

COUNTY:	FILE HEADING:	FILE NUMBER:
ST. CLAIR	FAIRMONT CITY/METRO	16305001

SOURCE OF SAMPLE: (Exact Location)

MONITOR WELL G14S

PHYSICAL OBSERVATIONS, REMARKS:

CLEAR, NO ODOR

TESTS REQUESTED: PCB'S

COLLECTED BY: D. TOLAN, K. BOSIE, R. HERSEMANN

TRANSPORTED BY: K. BOSIE

LABORATORY

RECEIVED BY: S.B

DATE COMPLETED: 5/26/82

DATE FORWARDED: 5/26/82

J Hurley

PCB <c.1 mg/l

RE[illegible]

MAY 26 1982

E.P.A. - D.L.P.C.
STATE OF ILLINOIS

LPC-8A 4/77

(NOT FOR DATA PROCESSING)

D024622

G14D

mr

Time Collected: 11:15 A.m.

Date Collected: 4/29/82

Lab # D024623

SPECIAL ANALYSIS FORM

Date Received APR 29 1982

ILLINOIS ENVIRONMENTAL PROTECTION AGENCY
DIVISION OF LAND/NOISE POLLUTION CONTROL

COUNTY:	FILE HEADING:	FILE NUMBER:
ST. CLAIR	FAIRMONT CITY/METRO	1630500 1

SOURCE OF SAMPLE: (Exact Location)

MONITOR WELL G14D

PHYSICAL OBSERVATIONS, REMARKS:

CLEAR, NO ODOR

TESTS REQUESTED: PCB's

COLLECTED BY: D. TOLAN, K. BOSIE, R. HERSEMANN

TRANSPORTED BY: K. BOSIE

LABORATORY

RECEIVED BY: S.B.

DATE COMPLETED: 5/26/82

DATE FORWARDED: 5/26/82

PCB <0.1 ppb

RECEIVED
MAY 26 1982
E.P.A. — D.L.P.C.
STATE OF ILLINOIS

LPC-8A 4/77

(NOT FOR DATA PROCESSING)

D024623

G15 S

mR

Time Collected: 9:50 A.M.

Date Collected: 4/29/82

SPECIAL ANALYSIS FORM

Lab # DC24624

Date Received APR 29 1982

ILLINOIS ENVIRONMENTAL PROTECTION AGENCY
DIVISION OF LAND/NOISE POLLUTION CONTROL

COUNTY:	FILE HEADING:	FILE NUMBER:
ST. CLAIR	FAIRMONT CITY/METRO	16305001

SOURCE OF SAMPLE: (Exact Location)

MONITOR WELL G15 S

PHYSICAL OBSERVATIONS, REMARKS:

CLEAR, NO ODOR

TESTS REQUESTED: PCB'S

COLLECTED BY: D. TOLAN, K. BOSIE. R. HERSEMANN

TRANSPORTED BY: K. BOSIE

LABORATORY

RECEIVED BY: S.B.

DATE COMPLETED: 5/26/82

DATE FORWARDED: 5/26/82

J Hurley

PCB < 0.1 ug/l

RECEIVED
MAY 26 1982
E.P.A. — D.L.P.C.
STATE OF ILLINOIS

LPC-8A 4/77

(NOT FOR DATA PROCESSING)

DC24624

G15D

mR

Time Collected: 10:00 A.M.

Date Collected: 4/29/82

Lab # DC24625

SPECIAL ANALYSIS FORM

Date Received APR 29 1982

ILLINOIS ENVIRONMENTAL PROTECTION AGENCY
DIVISION OF LAND/NOISE POLLUTION CONTROL

COUNTY:	FILE HEADING:	FILE NUMBER:
ST. CLAIR	FAIRMONT CITY / METRO	16305001

SOURCE OF SAMPLE: (Exact Location)

MONITOR WELL G15D

PHYSICAL OBSERVATIONS, REMARKS:

CLEAR, NO ODOR

TESTS REQUESTED: PCB'S

COLLECTED BY: D. TOLAN, K. BOSIE, R. HERSEMANN

TRANSPORTED BY: K. BOSIE

LABORATORY

RECEIVED BY: S.B.

DATE COMPLETED: 5/26/82

DATE FORWARDED: 5/26/82 J. Hurley

PCB < [illegible]

RECEIVED
MAY 26 1982
L.P.A. — D.L.P.C.
STATE OF ILLINOIS

LPC-8A 4/77

(NOT FOR DATA PROCESSING)

DC24625

G106

mR

Time Collected: 10:20 A.M.

Date Collected: 4/29/82

SPECIAL ANALYSIS FORM

Lab # D024626

Date Received APR 29 1982

ILLINOIS ENVIRONMENTAL PROTECTION AGENCY
DIVISION OF LAND/NOISE POLLUTION CONTROL

COUNTY:	FILE HEADING:	FILE NUMBER:
ST. CLAIR	FAIRMONT CITY / METRO	16305001

SOURCE OF SAMPLE: (Exact Location)

MONITOR WELL G106

PHYSICAL OBSERVATIONS, REMARKS:

CLEAR, NO ODOR

TESTS REQUESTED: PCB'S

COLLECTED BY: D. TOLAN, K. BOSIE, R. HERSEMANN

TRANSPORTED BY: K. BOSIE

LABORATORY

RECEIVED BY: SB

DATE COMPLETED: 5/26/82

DATE FORWARDED: 5/26/82

J Hurley

ND < 0.1 ppm

RECEIVED

MAY 26 1982

E.P.A. - L.P.C.
STATE OF ILLINOIS

LPC-8A 4/77

(NOT FOR DATA PROCESSING)

D024626

G107

Time Collected: 8:55 A.M.

Date Collected: 4/29/82

Lab # D024627

SPECIAL ANALYSIS FORM

Date Received APR 29 1982

ILLINOIS ENVIRONMENTAL PROTECTION AGENCY
DIVISION OF LAND/NOISE POLLUTION CONTROL

COUNTY:	FILE HEADING:	FILE NUMBER:
ST. CLAIR	FAIRMONT CITY / METRO	16305001

SOURCE OF SAMPLE: (Exact Location)

MONITOR WELL G107

PHYSICAL OBSERVATIONS, REMARKS:

CLEAR, SLIGHT SULFUR ODOR

TESTS REQUESTED: PCB'S

COLLECTED BY: D. TOLAN, K. BOSIE, R. HERSEMANN

TRANSPORTED BY: K. BOSIE

LABORATORY

RECEIVED BY: SB

DATE COMPLETED: 5/26/82

DATE FORWARDED: 5/26/82

PCB < 5.1 ppb

RECEIVED
MAY 26 1982
E.P.A. — D.L.P.C.
STATE OF ILLINOIS

LPC-8A 4/77

(NOT FOR DATA PROCESSING)

D024627

G108

me

Time Collected: 8:45 AM

Date Collected: 4/29/82

Lab # DC24628

SPECIAL ANALYSIS FORM

Date Received APR 29 1982

ILLINOIS ENVIRONMENTAL PROTECTION AGENCY
DIVISION OF LAND/NOISE POLLUTION CONTROL

COUNTY:	FILE HEADING:	FILE NUMBER:
ST. CLAIR	FAIRMONT CITY/METRO	16305001

SOURCE OF SAMPLE: (Exact Location)

MONITOR WELL G108

PHYSICAL OBSERVATIONS, REMARKS:

CLEAR, NO ODOR

TESTS REQUESTED: PCB'S

COLLECTED BY: D. TOLAN, K. BOSIE, R. HERSEMANN TRANSPORTED BY: K. BOSIE

LABORATORY

RECEIVED BY: S.B DATE COMPLETED: 5/26/82 DATE FORWARDED: 5/26/82

J. Hurley

PCB < 0.1 ppm

MAY 26 1982

~~E.P.A. D.L.P.C.~~
STATE OF ILLINOIS

LPC-8A 4/77 (NOT FOR DATA PROCESSING)

DC24628

G 603

me

Time Collected: 7:05 A.M

Lab # D024629

SPECIAL ANALYSIS FORM

Date Collected: 4/29/82

Date Received APR 29 1982

ILLINOIS ENVIRONMENTAL PROTECTION AGENCY
DIVISION OF LAND/NOISE POLLUTION CONTROL

COUNTY:	FILE HEADING:	FILE NUMBER:
ST. CLAIR	FAIRMONT CITY / METRO	LPC #16305001

SOURCE OF SAMPLE: (Exact Location)

MONITOR WELL G 603

PHYSICAL OBSERVATIONS, REMARKS:

CLEAR, NO ODOR

TESTS REQUESTED: PCB's

COLLECTED BY: D. TOLAN, K. BOSIE, R. HERSEMANN

TRANSPORTED BY: K. BOSIE

LABORATORY

RECEIVED BY: S.D.

DATE COMPLETED: 5/26/82

DATE FORWARDED: 5/26/82 J. Hurley

[illegible]

RECEIVED

MAY 26 1982

LPC-8A 4/77

(NOT FOR DATA PROCESSING)

D.L.P.C.
STATE OF ILLINOIS

D024629

G-605

me

Time Collected: 8:25 AM

Date Collected: 4/29/82

SPECIAL ANALYSIS FORM

Lab # D024630

Date Received APR 29 1982

ILLINOIS ENVIRONMENTAL PROTECTION AGENCY
DIVISION OF LAND/NOISE POLLUTION CONTROL

COUNTY:	FILE HEADING:	FILE NUMBER:
ST. CLAIR	FAIRMONT CITY/METRO	16305001

SOURCE OF SAMPLE: (Exact Location)

MONITOR WELL G 605

PHYSICAL OBSERVATIONS, REMARKS:

CLEAR, SLIGHT SULFUR ODOR

TESTS REQUESTED: PCB's

COLLECTED BY: D. TOLAN, K. BOSIE, R. HERSEMANN

TRANSPORTED BY: K. BOSIE

LABORATORY

RECEIVED BY: S.B.

DATE COMPLETED: 5/26/82

DATE FORWARDED: 5/26/82

J. Hurley

PCB < 0.1 µg/L

RECEIVED

MAY 26 1982

EPA — D.L.P.C.
STATE OF ILLINOIS

LPC-8A 4/77

(NOT FOR DATA PROCESSING)

D024630

G607

Time Collected: 8:10 AM

Date Collected: 4/29/82

SPECIAL ANALYSIS FORM

Lab # DC24631

Date Received APR 29 1982

ILLINOIS ENVIRONMENTAL PROTECTION AGENCY
DIVISION OF LAND/NOISE POLLUTION CONTROL

COUNTY:	FILE HEADING:	FILE NUMBER:
ST. CLAIR	FAIRMONT CITY / METRO	1630500 1

SOURCE OF SAMPLE: (Exact Location)

MONITOR WELL G607

PHYSICAL OBSERVATIONS, REMARKS:

CLEAR, SLIGHT SULFUR ODOR

TESTS REQUESTED: PCB'S

COLLECTED BY: D. TOLAN, P. HERSOMAN, K. BOSIE TRANSPORTED BY: K. BOSIE

LABORATORY

RECEIVED BY: S.D. DATE COMPLETED: 5/26/82 DATE FORWARDED: 5/26/82 J Hurley

RECEIVED

MAY 26 1982

E.P.A. — D.L.P.C.
STATE OF ILLINOIS

LPC-8A 4/77 (NOT FOR DATA PROCESSING)

DC24631

L 402 R05-8505-06 IL0417-09 mR

ILLINOIS ENVIRONMENTAL PROTECTION AGENCY
DIVISION OF LAND/NOISE POLLUTION CONTROL
CHEMICAL ANALYSIS FORM

Key for Determining Type of Monitoring Point

(S) Surface Water	(G) Ground Water	(L) Leachate	(X) Special
(1) Upstream	(1) Monitor Well	(1) Flow or seep	(1) Soil
(2) Mid-site	(2) Private well	(2) Pond	(2) Waste
(3) Downstream	(3) Spring	(3) Collection System	(3) Other
(4) Run-off	(4) Lysimeter		
(5) Impounded	(5) Public W S		

RECEIVED JUN 9 1982 E.P.A. — STATE OF ILLINOIS

Name LEACHATE WELL (Private Well, Stream, Spring, Impounded Water only)

L P C S M 0 1 0 (1) (8) SITE INVENTORY NUMBER 16305001 (9) (16)

MONITOR POINT NUMBER L 402 (17) (20) DATE COLLECTED 042982 (21) (26)

ST. CLAIR Co. - LPC REGION S (27)

FAIRMONT CITY / METRO
(Location) (Responsible Party)

Legal (1); Illegal (2); Indicate One: 1 (28) Board Order (X) (29)

Time Collected 7:25 a.m. p.m. Unable to collect sample (X) (30)

Stick-up 2.5 ft. (31) (33) Depth to water 21.9 ft. (from T.O.C.) (34) (36)

Sample temp. ___ ° (37) (39) Background (X). . . . (40)

Ground water sampled by (Indicate one): (1) Bailing; (2) Pumping; (3) Other (Specify) ___ 1 (41)

Sample Appearance: CLOUDY, STRONG LEACHATE ODOR

Collector comments:

D. TOLAN, K. BOSIE, R. HERSEMANN DLPC
Collected by Div. or Company

K. BOSIE DLPC
Transported by Div. or Company

LAB USE ONLY
Lab No. B043421
Date Rec'd APR 30 1982
Rec'd by AR Time 11 a.m. p.m.
Sample temp. acceptable YES NO
Sample properly preserved YES NO
Date completed
Date forwarded JUN 7 1982
CHAMPAIGN
Supervisor Signature
Name
Address of Lab

LPCSM020
Lab Comments:
*COD=345. (27) (36)
(37) (46)
(47) (56)
(57) (66)
(67) (76)
Private Lab (X) (77)
IEPA Lab (X) X (78)

LPCSM030

		PARAMETERS+	PPM*
27	X	Alkalinity[1]	1760.
31	X	Ammonia as N	110.
37	X	Arsenic As	0.010
44	X	Barium Ba	1.0
49	X	BOD -5	43.
53	X	Boron B	5.5
58	X	Cadmium Cd	0.0
64	X	Calcium Ca	170.
69	X	COD	D.S. ~~43.~~
73	X	Chloride Cl	287.

LPCSM040

27	X	Chromium Cr (tot)	0.00
33	X	Chromium Cr^{+6}	0.0
39	X	Copper Cu	0.05
45	X	Cyanide CN	0.00
52		Fecal Coli (#/100 ml)	
56	X	Fluoride F	0.2
61	X	Hardness $CaCO_3$	750.
65	X	Iron Fe	49.
70	X	Lead Pb	0.0

LPCSM050

27	X	Magnesium Mg	96.
32	X	Manganese Mn	0.77
38	X	Mercury Hg	0.0000
46	X	Nickel Ni	0.0
51	X	Nitrate-nitrite N	0.0
56	X	Oil and Grease	16.
60	X	pH (Units)	6.4
63	X	Phenolics	0.060
70	X	Phosphorus P	2.6
76	X	Potassium K	110.

LPCSM060

27	X	R.O.E. (180°C)	1870.
31	X	Selenium Se	0.002
38	X	Silver Ag	0.00
44	X	Sodium Na	39.
49	X	SC (umhos/cm)	3770.
53	X	Sulfate SO_4	23.
58	X	Zinc Zn	0.1
63	X	SULFIDE	0.00

+Analyses are to be performed on unfiltered samples. *Values exceeding no. of places shown are reported in the lab comments section; tests requested but not run should also be explained in the lab comments section.

[1]Alkalinity is to be determined as ppm of $CaCO_3$ at pH 4.5.

H.W

IL 532-0313
LPC 8 3/77

L 401

mR

ILLINOIS ENVIRONMENTAL PROTECTION AGENCY
DIVISION OF LAND/NOISE POLLUTION CONTROL
CHEMICAL ANALYSIS FORM

Key for Determining Type of Monitoring Point

(S) Surface Water	(G) Ground Water	(L) Leachate	(X) Special
(1) Upstream	(1) Monitor Well	(1) Flow or seep	(1) Soil
(2) Mid-site	(2) Private well	(2) Pond	(2) Waste
(3) Downstream	(3) Spring	(3) Collection System	(3) Other
(4) Run-off	(4) Lysimeter		
(5) Impounded	(5) Public W S		

RECEIVED JUN 9 1982 E.P.A. — D.L.P.C. STATE OF ILLINOIS

Name LEACHATE WELL (Private Well, Stream, Spring, Impounded Water only)

(1) L P C S M 0 1 0 (8) SITE INVENTORY NUMBER (9) 16305001 (16)

MONITOR POINT NUMBER (17) L 401 (20) DATE COLLECTED (21) 042982 (26)

ST. CLAIR Co. - LPC REGION (27) 5

FAIRMONT CITY (Location) / METRO (Responsible Party)

Legal (1); Illegal (2); Indicate One: (28) 1 Board Order (X) (29)

Time Collected 7:50 a.m. p.m. Unable to collect sample (X) (30)

Stick-up (31) 2.4 (33) ft. Depth to water (from T.O.C.) (34) 19.2 (36) ft.

Sample temp. (37) ° (39) Background (X). . . . (40)

Ground water sampled by (Indicate one): (1) Bailing; (2) Pumping; (3) Other (Specify) (41) 1

Sample Appearance: CLOUDY - OIL FLOATING ON TOP LEACHATE AND OIL ODOR

Collector comments:

D. TOLAN, K. BOSIE, R. HERSEMANN — Collected by — DLPC — Div. or Company

K. BOSIE — Transported by — DLPC — Div. or Company

LAB USE ONLY B043420

Lab No.

Date Rec'd APR 30 1982

Rec'd by AR Time 11 a.m. p.m.

Sample temp. acceptable YES NO

Sample properly preserved YES NO

Date completed

Date forwarded JUN 7 1982

CHAMPAIGN — Supervisor Signature

Name

Address of Lab

LPCSM020 Lab Comments:

(27) (36)

(37) (46)

(47) (56)

(57) (66)

(67) (76)

Private Lab (X) (77)

IEPA Lab (X) X (78)

LPCSM030

		PARAMETERS+	PPM*
27	X	Alkalinity[1]	2200.
31	X	Ammonia as N	0.0
37	X	Arsenic As	0.003
44	X	Barium Ba	1.0
49	X	BOD -5	725.
53	X	Boron B	10.8
58	X	Cadmium Cd	0.0
64	X	Calcium Ca	130.
69	X	COD	2570.
73	X	Chloride Cl	1188.

LPCSM040

27	X	Chromium Cr (tot)	0.00
33	X	Chromium Cr^{+6}	0.0
39	X	Copper Cu 0.10	0.10
45	X	Cyanide CN	0.00
52		Fecal Coli (#/100 ml)	
56	X	Fluoride F	0.5
61	X	Hardness $CaCO_3$	810.
65	X	Iron Fe	36.
70	X	Lead Pb	0.0

LPCSM050

27	X	Magnesium Mg	130.
32	X	Manganese Mn	0.31
38	X	Mercury Hg	0.0001
46	X	Nickel Ni	0.0
51	X	Nitrate-nitrite N	0.0
56	X	Oil and Grease	7120.
60	X	pH (Units)	6.8
63	X	Phenolics	0.095
70	X	Phosphorus P	0.69
76	X	Potassium K	230.

LPCSM060

27	X	R.O.E. (180°C)	4030.
31	X	Selenium Se	0.004
38	X	Silver Ag	0.00
44	X	Sodium Na	1100.
49	X	SC (umhos/cm)	7310.
53	X	Sulfate SO_4	28.
58	X	Zinc Zn	0.3
63			

+Analyses are to be performed on unfiltered samples. *Values exceeding no. of places shown are reported in the lab comments section; tests requested but not run should also be explained in the lab comments section.

[1]Alkalinity is to be determined as ppm of $CaCO_3$ at pH 4.5.

H.W

IL 532-0313
LPC 8 3/77

G15 D

mR

ILLINOIS ENVIRONMENTAL PROTECTION AGENCY
DIVISION OF LAND/NOISE POLLUTION CONTROL
CHEMICAL ANALYSIS FORM

RECEIVED JUN 9 1982 E.P.A. — D.L.P. STATE OF ILL.

Key for Determining Type of Monitoring Point

(S) Surface Water	(G) Ground Water	(L) Leachate	(X) Special
(1) Upstream	(1) Monitor Well	(1) Flow or seep	(1) Soil
(2) Mid-site	(2) Private well	(2) Pond	(2) Waste
(3) Downstream	(3) Spring	(3) Collection System	(3) Other
(4) Run-off	(4) Lysimeter		
(5) Impounded	(5) Public W S		

Name (Private Well, Stream, Spring, Impounded Water only): MONITOR WELL

(1) L P C S M 0 1 0 (8) SITE INVENTORY NUMBER (9) 1 6 3 0 5 0 0 1 (16)

MONITOR POINT NUMBER (17) G 1 5 D (20) DATE COLLECTED (21) 0 4 2 9 8 2 (26)

ST. CLAIR Co. - LPC REGION (27) S

FAIRMONT CITY (Location) / METRO (Responsible Party)

Legal (1); Illegal (2); Indicate One: (28) 1 Board Order (X) (29)

Time Collected 10:00 a.m. p.m. Unable to collect sample (X) (30)

Stick-up (31) 1.2 (33) ft. Depth to water (from T.O.C.) (34) 11.8 (36) ft.

Sample temp. (37) ___ (39) °C Background (X). . . . (40)

Ground water sampled by (Indicate one): (1) Bailing; (2) Pumping; (3) Other (Specify) ___ (41) 2

Sample Appearance: CLEAR, NO ODOR

Collector comments: REMOVED 1 VOL. FILTERED
TOTAL DEPTH 43.7 FT

D. TOLAN, K. BOSIE, R. HERSEMANN — Collected by
DLPC — Div. or Company
K. BOSIE — Transported by
DLPC — Div. or Company

LAB USE ONLY

Lab No. B043416

Date Rec'd APR. 30. 1982

Rec'd by AL Time 11 a.m. p.m.

Sample temp. acceptable YES NO
Sample properly preserved YES NO
Date completed
Date forwarded JUN 7 1982

CHAMPAIGN
Supervisor Signature

Name
Address of Lab

LPCSM020
Lab Comments:

(27) ___ (36)
(37) ___ (46)
(47) ___ (56)
(57) ___ (66)
(67) ___ (76)

Private Lab (X)
IEPA Lab (X) X (77) (78)

		PARAMETERS+	PPM*
		LPCSM030	
27	X	Alkalinity[1]	377.
31	X	Ammonia as N	4.2
37	X	Arsenic As	0.000
44	X	Barium Ba	0.4
49	X	BOD -5	3.
53	X	Boron B	0.3
58	X	Cadmium Cd	0.0
64	X	Calcium Ca	140.
69	X	COD	20.
73	X	Chloride Cl	68.
		LPCSM040	
27	X	Chromium Cr (tot)	0.00
33	X	Chromium Cr^{+6}	0.0
39	X	Copper Cu	0.00
45	X	Cyanide CN	0.00
52		Fecal Coli (#/100 ml)	
56	X	Fluoride F	1.0
61	X	Hardness $CaCO_3$	469.
65	X	Iron Fe	8.6
70	X	Lead Pb	0.0
		LPCSM050	
27	X	Magnesium Mg	29.
32	X	Manganese Mn	1.0
38	X	Mercury Hg	0.0000
46	X	Nickel Ni	0.0
51	X	Nitrate-nitrite N	0.0
56		Oil and Grease	
60	X	pH (Units)	6.9
63	X	Phenolics	0.000
70	X	Phosphorus P	0.53
76	X	Potassium K	6.8
		LPCSM060	
27	X	R.O.E. (180°C)	636.
31	X	Selenium Se	0.000
38	X	Silver Ag	0.00
44	X	Sodium Na	48.
49	X	SC (umhos/cm)	1090.
53	X	Sulfate SO_4	122.
58	X	Zinc Zn	0.0
63			

+ Analyses are to be performed on unfiltered samples. *Values exceeding no. of places shown are reported in the lab comments section; tests requested but not run should also be explained in the lab comments section.

[1] Alkalinity is to be determined as ppm of $CaCO_3$ at pH 4.5.

H.W.

32-0313
R 3/77

G15S

MR

ILLINOIS ENVIRONMENTAL PROTECTION AGENCY
DIVISION OF LAND/NOISE POLLUTION CONTROL
CHEMICAL ANALYSIS FORM

Key for Determining Type of Monitoring Point

(S) Surface Water	(G) Ground Water	(L) Leachate	(X) Special
(1) Upstream	(1) Monitor Well	(1) Flow or seep	(1) Soil
(2) Mid-site	(2) Private well	(2) Pond	(2) Waste
(3) Downstream	(3) Spring	(3) Collection System	(3) Other
(4) Run-off	(4) Lysimeter		
(5) Impounded	(5) Public W S		

JUN 9 1982 EPA

Name MONITOR WELL (Private Well, Stream, Spring, Impounded Water only)

(1) L P C S M 0 1 0 (8) SITE INVENTORY NUMBER (9) 1 6 3 0 5 0 0 1 (16)

MONITOR POINT NUMBER (17) G 1 5 S (20) DATE COLLECTED (21) 0 4 2 9 8 2 (26)

ST. CLAIR Co. - LPC REGION (27) S

FAIRMONT CITY / METRO
(Location) (Responsible Party)

Legal (1); Illegal (2); Indicate One: (28) 1 Board Order (X) (29)

Time Collected 9:50 a.m. p.m. Unable to collect sample (X) (30)

Stick-up (31) 0.9 (33) ft. Depth to water (from T.O.C.) (34) 1 1 . 3 (36) ft.

Sample temp. (37) ° (39) Background (X). . . . (40)

Ground water sampled by (Indicate one): (1) Bailing; (2) Pumping; (3) Other (Specify) (41) 2

Sample Appearance: CLEAR, NO ODOR

Collector comments: REMOVED 1 VOL. FILTERED.
TOTAL DEPTH 18.3 Ft.

D. TOLAN, K. BOSIE, R. HERSEMANN DLPC
Collected by Div. or Company

K. BOSIE DLPC
Transported by Div. or Company

LAB USE ONLY

Lab No. B043115

Date Rec'd APR. 30. 1982

Rec'd by AL Time 11 a.m. p.m.

Sample temp. acceptable YES NO

Sample properly preserved YES NO

Date completed

Date forwarded JUN 7 1982

CHAMPAIGN
Supervisor Signature

Name
Address of Lab

LPCSM020
Lab Comments:

(27) *CAP LINER (36)

(37) CONTAMINAT (46)

(47) ION (56)

(57) (66)

(67) (76)

Private Lab (X)

IEPA Lab (X) X (77) (78)

LPCSM030

		PARAMETERS*	PPM*
27	X	Alkalinity[1]	273.
31	X	Ammonia as N	0.33
37	X	Arsenic As	0.000
44	X	Barium Ba	0.0
49	X	BOD -5	1.
53	X	Boron B	0.4
58	X	Cadmium Cd	0.0
64	X	Calcium Ca	150.
69	X	COD	*
73	X	Chloride Cl	43.

LPCSM040

27	X	Chromium Cr (tot)	0.00
33	X	Chromium Cr^{+6}	0.0
39	X	Copper Cu	0.02
45	X	Cyanide CN	0.01
52		Fecal Coli (#/100 ml)	
56	X	Fluoride F	0.4
61	X	Hardness $CaCO_3$	476.
65	X	Iron Fe	0.1
70	X	Lead Pb	0.0

LPCSM050

27	X	Magnesium Mg	29.
32	X	Manganese Mn	0.07
38	X	Mercury Hg	0.0000
46	X	Nickel Ni	0.0
51	X	Nitrate-nitrite N	9.9
56		Oil and Grease	
60	X	pH (Units)	6.9
63	X	Phenolics	0.000
70	X	Phosphorus P	0.06
75	X	Potassium K	4.6

LPCSM060

27	X	T.D.S. (180°C)	655.
31	X	Selenium Se	0.000
36	X	Silver Ag	0.0
44	X	Sodium Na	28.
49	X	SC (umhos/cm)	970.
53	X	Sulfate SO_4	153.
58	X	Zinc Zn	0.0
63			

[1] Alkalinity is to be determined as ppm of $CaCO_3$ at pH 4.5.

* Analyses are to be performed on unfiltered samples. *Values exceeding no. of places shown are reported in the lab comments section; tests requested but not run should also be explained in the lab comments section.

H.W.

LPC-8 REV. 7/77

G14D

MR

ILLINOIS ENVIRONMENTAL PROTECTION AGENCY
DIVISION OF LAND/NOISE POLLUTION CONTROL
CHEMICAL ANALYSIS FORM

Key for Determining Type of Monitoring Point

(S) Surface Water	(G) Ground Water	(L) Leachate	(X) Special
(1) Upstream	(1) Monitor Well	(1) Flow or seep	(1) Soil
(2) Mid-site	(2) Private well	(2) Pond	(2) Waste
(3) Downstream	(3) Spring	(3) Collection System	(3) Other
(4) Run-off	(4) Lysimeter		
(5) Impounded	(5) Public W S		

JUN 9 1982

Name MONITOR WELL (Private Well, Stream, Spring, Impounded Water only)

(1) L P C S M 0 1 0 (8) SITE INVENTORY NUMBER (9) 1 6 3 0 5 0 0 1 (16)

MONITOR POINT NUMBER (17) G 1 4 D (20) DATE COLLECTED (21) 0 4 2 9 8 2 (26)

ST. CLAIR Co. - LPC REGION (27) S

FAIRMONT CITY / METRO
(Location) (Responsible Party)

Legal (1); Illegal (2); Indicate One: (28) 1 Board Order (X) (29)

Time Collected 11:15 a.m. p.m. Unable to collect sample (X) (30)

Stick-up (31) 2.3 (33) ft. Depth to water (from T.O.C.) (34) 9.1 (36) ft.

Sample temp. (37) ___ (39) ° Background (X). . . . (40)

Ground water sampled by (Indicate one): (1) Bailing; (2) Pumping; (3) Other (Specify) ___ (41) 2

Sample Appearance: CLEAR, NO ODOR

Collector comments: REMOVED 1 VOL. FILTERED
TOTAL DEPTH 56.6 Ft.

D. TOLAN, K. BOSIE, R. HERSEMANN — Collected by
DCPC — Div. or Company
K. BOSIE — Transported by
DCPC — Div. or Company

LAB USE ONLY

Lab No. ___

Date Rec'd B043414 APR. 30. 1982

Rec'd by AR Time 11 a.m. p.m.

Sample temp. acceptable YES NO

Sample properly preserved YES NO

Date completed

Date forwarded JUN 7 1982

CHAMPAIGN
Supervisor Signature

Name ___
Address of Lab ___

LPCSM020
Lab Comments:

(27) ___ (36)
(37) ___ (46)
(47) ___ (56)
(57) ___ (66)
(67) ___ (76)

Private Lab (X)

IEPA Lab (X) X (77) (78)

LPCSM030

		PARAMETERS*	PPM*
27	X	Alkalinity[1]	357.
31	X	Ammonia as N	0.97
37	X	Arsenic As	0.000
44	X	Barium Ba	0.0
49	X	BOD -5	1.
53	X	Boron B	0.2
58	X	Cadmium Cd	0.0
64	X	Calcium Ca	110.
69	X	COD	11.
73	X	Chloride Cl	8.

LPCSM040

27	X	Chromium Cr (tot)	0.00
33	X	Chromium Cr^{+6}	0.0
39	X	Copper Cu	0.01
45	X	Cyanide CN	0.00
52		Fecal Coli (#/100 ml)	
56	X	Fluoride F	0.3
61	X	Hardness $CaCO_3$	394.
65	X	Iron Fe	5.5
70	X	Lead Pb	0.0

LPCSM050

27	X	Magnesium Mg	29.
32	X	Manganese Mn	0.24
38	X	Mercury Hg	0.0000
46	X	Nickel Ni	0.0
51	X	Nitrate-nitrite N	0.0
56		Oil and Grease	
60	X	pH (Units)	7.1
63	X	Phenolics	0.000
70	X	Phosphorus P	0.10
75	X	Potassium K	5.8

LPCSM060

27	X	R.D.E. (180°C)	448.
31	X	Selenium Se	0.000
36	X	Silver Ag	0.00
44	X	Sodium Na	16.
49	X	SC (umhos/cm)	720.
53	X	Sulfate SO_4	84.
58	X	Zinc Zn	0.0
63			

*Analyses are to be performed on unfiltered samples. *Values exceeding no. of places shown are reported in the lab comments section; tests requested but not run should also be explained in the lab comments section.

[1]Alkalinity is to be determined as ppm of $CaCO_3$ at pH 4.5.

H.W.

LPC-8 REV. 7/77

G14S.

MR

ILLINOIS ENVIRONMENTAL PROTECTION AGENCY
DIVISION OF LAND/NOISE POLLUTION CONTROL
CHEMICAL ANALYSIS FORM

RECEIVED JUN 9 1982

Key for Determining Type of Monitoring Point

(S) Surface Water	(G) Ground Water	(L) Leachate	(X) Special
(1) Upstream	(1) Monitor Well	(1) Flow or seep	(1) Soil
(2) Mid-site	(2) Private well	(2) Pond	(2) Waste
(3) Downstream	(3) Spring	(3) Collection System	(3) Other
(4) Run-off	(4) Lysimeter		
(5) Impounded	(5) Public W S		

Name MONITOR WELL (Private Well, Stream, Spring, Impounded Water only)

(1) L P C S M 0 1 0 (8) SITE INVENTORY NUMBER (9) 1 6 3 0 5 0 0 1 (16)

MONITOR POINT NUMBER (17) G 1 4 S (20) DATE COLLECTED (21) 0 4 2 9 8 2 (26)

ST. CLAIR Co. - LPC REGION (27) 5

FAIRMONT CITY / METRO
(Location) (Responsible Party)

Legal (1); Illegal (2); Indicate One: (28) 1 Board Order (X) (29)

Time Collected 11:25 a.m. p.m. Unable to collect sample (X) (30)

Stick-up (31) 1.2 (33) ft. Depth to water (from T.O.C.) (34) 6.6 (36) ft.

Sample temp. (37) ___ (39) ° Background (X). . . . (40)

Ground water sampled by (Indicate one): (1) Bailing; (2) Pumping; (3) Other (Specify) ___ (41) 2

Sample Appearance: CLEAR, NO ODOR

Collector comments: REMOVED 1 VOL. FILTERED
TOTAL DEPTH 20.0 Ft.

D. TOLAN, K. BOSIE, R. HERIEMANN — Collected by — DLPC — Div. or Company
K. BOSIE — Transported by — DLPC — Div. or Company

LAB USE ONLY
Lab No. B043413
Date Rec'd APR. 30. 1982
Rec'd by AR Time 11 a.m. p.m.
Sample temp. acceptable YES NO
Sample properly preserved YES NO
Date completed
Date forwarded JUN 7 1982
CHAMPAIGN
Supervisor Signature

Name
Address of Lab

LPCSM020
Lab Comments:
(27) (36)
(37) (46)
(47) (56)
(57) (66)
(67) (76)
Private Lab (X)
IEPA Lab (X) X (77) (78)

LPCSM030

		PARAMETERS+	PPM*
27	X	Alkalinity[1]	888.
31	X	Ammonia as N	6.9
37	X	Arsenic As	0.013
44	X	Barium Ba	0.4
49	X	BOD -5	9.
53	X	Boron B	0.4
58	X	Cadmium Cd	0.0
64	X	Calcium Ca	210.
69	X	COD	31.
73	X	Chloride Cl	56.

LPCSM040

27	X	Chromium Cr (tot)	0.00
33	X	Chromium Cr^{+6}	0.0
39	X	Copper Cu	0.01
45	X	Cyanide CN	0.00
52		Fecal Coli (#/100 ml)	.
56	X	Fluoride F	0.3
61	X	Hardness $CaCO_3$	776.
65	X	Iron Fe	19.
70	X	Lead Pb	0.0

LPCSM050

27	X	Magnesium Mg	63.
32	X	Manganese Mn	4.7
38	X	Mercury Hg	0.0000
46	X	Nickel Ni	0.0
51	X	Nitrate-nitrite N	0.0
56		Oil and Grease	.
60	X	pH (Units)	6.8
63	X	Phenolics	0.000
70	X	Phosphorus P	0.83
76	X	Potassium K	3.5

LPCSM060

27	X	R.O.E. (180°C)	547.
31	X	Selenium Se	0.000
38	X	Silver Ag	0.00
44	X	Sodium Na	49.
49	X	SC (umhos/cm)	1600.
53	X	Sulfate SO_4	12.
58	X	Zinc Zn	0.0
63			

+ Analyses are to be performed on unfiltered samples. *Values exceeding no. of places shown are reported in the lab comments section; tests requested but not run should also be explained in the lab comments section.

[1] Alkalinity is to be determined as ppm of $CaCO_3$ at pH 4.5.

H.W.

IL 532-0313
LPC 8 3/77

G11.D

mR

ILLINOIS ENVIRONMENTAL PROTECTION AGENCY
DIVISION OF LAND/NOISE POLLUTION CONTROL
CHEMICAL ANALYSIS FORM

Key for Determining Type of Monitoring Point

(S) Surface Water	(G) Ground Water	(L) Leachate	(X) Special
(1) Upstream	(1) Monitor Well	(1) Flow or seep	(1) Soil
(2) Mid-site	(2) Private well	(2) Pond	(2) Waste
(3) Downstream	(3) Spring	(3) Collection System	(3) Other
(4) Run-off	(4) Lysimeter		
(5) Impounded	(5) Public W S		

JUN 9 19

Name (Private Well, Stream, Spring, Impounded Water only) MONITOR WELL

(1) L P C S M 0 1 0 (8) SITE INVENTORY NUMBER (9) 1 6 3 0 5 0 0 1 (16)

MONITOR POINT NUMBER (17) G 1 1 D (20) DATE COLLECTED (21) 0 4 2 9 8 2 (26)

ST. CLAIR Co. - LPC REGION (27) S

FAIRMONT CITY / METRO
(Location) (Responsible Party)

Legal (1); Illegal (2); Indicate One: (28) 1 Board Order (X) (29)

Time Collected 11:50 a.m. p.m. Unable to collect sample (X) (30)

Stick-up (31) 2.1 (33) ft. Depth to water (from T.O.C.) (34) 6.1 (36) ft.

Sample temp. (37) ° (39) Background (X). . . . (40)

Ground water sampled by (Indicate one): (1) Bailing; (2) Pumping; (3) Other (Specify) (41) 2

Sample Appearance: CLEAR, SULFUR ODOR

Collector comments:

TOTAL DEPTH 33.5 FT.

D. TOLAN, K. BOSIE, R. HERSEMANN — Collected by
DLPC — Div. or Company

K. BOSIE — Transported by
DLPC — Div. or Company

LAB USE ONLY
Lab No. B043412
Date Rec'd APR. 30. 1982
Rec'd by AR Time 11 a.m. p.m.
Sample temp. acceptable YES NO
Sample properly preserved YES NO
Date completed
Date forwarded JUN 7 1982
CHAMPAIGN
Supervisor Signature

Name
Address of Lab

LPCSM020
Lab Comments:

(27) (36)
(37) (46)
(47) (56)
(57) (66)
(67) (76)

Private Lab (X)
IEPA Lab (X) X (77) (78)

LPCSM030

		PARAMETERS+	PPM*
27	X	Alkalinity[1]	427.
31	X	Ammonia as N	7.4
37	X	Arsenic As	0.013
44	X	Barium Ba	0.5
49	X	BOD -5	3.
53	X	Boron B	0.3
58	X	Cadmium Cd	0.0
64	X	Calcium Ca	110.
69	X	COD	17.
73	X	Chloride Cl	11.

LPCSM040

27	X	Chromium Cr (tot)	0.00
33	X	Chromium Cr^{+6}	0.0
39	X	Copper Cu	0.01
45	X	Cyanide CN	0.00
52		Fecal Coli (#/100 ml)	
56	X	Fluoride F	0.2
61	X	Hardness $CaCO_3$	395.
65	X	Iron Fe	10.
70	X	Lead Pb	0.0

LPCSM050

27	X	Magnesium Mg	38.
32	X	Manganese Mn	0.51
38	X	Mercury Hg	0.000
46	X	Nickel Ni	0.0
51	X	Nitrate-nitrite N	0.0
56		Oil and Grease	
60	X	pH (Units)	6.9
63	X	Phenolics	0.000
70	X	Phosphorus P	0.04
76	X	Potassium K	5.8

LPCSM060

27	X	R.O.E. (180°C)	369.
31	X	Selenium Se	0.000
38	X	Silver Ag	0.00
44	X	Sodium Na	15.
49	X	SC (umhos/cm)	830.
53	X	Sulfate SO_4	19.
58	X	Zinc Zn	0.0
63			

+ Analyses are to be performed on unfiltered samples. *Values exceeding no. of places shown are reported in the lab comments section; tests requested but not run should also be explained in the lab comments section.

[1] Alkalinity is to be determined as ppm of $CaCO_3$ at pH 4.5.

H.W.

IL 532-0313
LPC 8 3/77

G11.S.

m2

ILLINOIS ENVIRONMENTAL PROTECTION AGENCY
DIVISION OF LAND/NOISE POLLUTION CONTROL
CHEMICAL ANALYSIS FORM

Key for Determining Type of Monitoring Point

(S) Surface Water	(G) Ground Water	(L) Leachate	(X) Special
(1) Upstream	(1) Monitor Well	(1) Flow or seep	(1) Soil
(2) Mid-site	(2) Private well	(2) Pond	(2) Waste
(3) Downstream	(3) Spring	(3) Collection System	(3) Other
(4) Run-off	(4) Lysimeter		
(5) Impounded	(5) Public W S		

JUN 9 1982

Name MONITOR WELL (Private Well, Stream, Spring, Impounded Water only)

(1) L P C S M 0 1 0 (8) SITE INVENTORY NUMBER (9) 1 6 3 0 5 0 0 1 (16)

MONITOR POINT NUMBER (17) G 1 L S (20) DATE COLLECTED (21) 0 4 2 9 8 2 (26)

ST. CLAIR Co. - LPC REGION (27) S

FAIRMONT CITY (Location) / METRO (Responsible Party)

Legal (1); Illegal (2); Indicate One: (28) 1 Board Order (X) (29)

Time Collected 11:55 a.m. p.m. Unable to collect sample (X) (30)

Stick-up (31) 1.9 (33) ft. Depth to water (from T.O.C.) (34) 2.8 (36) ft.

Sample temp. (37) ° (39) Background (X). . . . (40)

Ground water sampled by (Indicate one): (1) Bailing; (2) Pumping; (3) Other (Specify) (41) 2

Sample Appearance: CLEAR, NO ODOR

Collector comments: REMOVED 1 vol. Filtered

TOTAL DEPTH 15.0 ft

D. Tolan, K. Bosie, R. Herseman — Collected by — DLPC — Div. or Company

K. Bosie — Transported by — DLPC — Div. or Company

LAB USE ONLY

Lab No.

Date Rec'd B043411 APR. 30. 1982

Rec'd by AK Time 11 a.m. p.m.

Sample temp. acceptable YES NO

Sample properly preserved YES NO

Date completed

Date forwarded JUN 7 1982 CHAMPAIGN

Supervisor Signature

Name

Address of Lab

LPCSM020 Lab Comments:

(27) (36)

(37) (46)

(47) (56)

(57) (66)

(67) (76)

Private Lab (X)

IEPA Lab (X) X (77) (78)

LPCSM030

		PARAMETERS+	PPM*
27	X	Alkalinity[1]	379.
31	X	Ammonia as N	1.5
37	X	Arsenic As	0.005
44	X	Barium Ba	0.1
49	X	BOD -5	2
53	X	Boron B	0.4
58	X	Cadmium Cd	0.0
64	X	Calcium Ca	220.
69	X	COD	20.
73	X	Chloride Cl	10.8

LPCSM040

27	X	Chromium Cr (tot)	0.00
33	X	Chromium Cr^{+6}	0.0
39	X	Copper Cu	0.01
45	X	Cyanide CN	0.00
52		Fecal Coli (#/100 ml)	
56	X	Fluoride F	0.3
61	X	Hardness $CaCO_3$	930.
65	X	Iron Fe	5.5
70	X	Lead Pb	0.0

LPCSM050

27	X	Magnesium Mg	64.
32	X	Manganese Mn	1.7
38	X	Mercury Hg	0.000
46	X	Nickel Ni	0.0
51	X	Nitrate-nitrite N	0.29
56		Oil and Grease	
60	X	pH (Units)	7.0
63	X	Phenolics	0.000
70	X	Phosphorus P	0.02
76	X	Potassium K	4.4

LPCSM060

27	X	R.O.E. (180°C)	1260.
31	X	Selenium Se	0.000
38	X	Silver Ag	0.00
44	X	Sodium Na	33.
49	X	SC (umhos/cm)	1720.
53	X	Sulfate SO_4	447.
58	X	Zinc Zn	0.2
63			

+ Analyses are to be performed on unfiltered samples. *Values exceeding no. of places shown are reported in the lab comments section; tests requested but not run should also be explained in the lab comments section.

[1] Alkalinity is to be determined as ppm of $CaCO_3$ at pH 4.5.

H.W.

IL 532-0313
LPC 8 3/77

G 607.

mR

ILLINOIS ENVIRONMENTAL PROTECTION AGENCY
DIVISION OF LAND/NOISE POLLUTION CONTROL
CHEMICAL ANALYSIS FORM

Key for Determining Type of Monitoring Point

(S) Surface Water	(G) Ground Water	(L) Leachate	(X) Special
(1) Upstream	(1) Monitor Well	(1) Flow or seep	(1) Soil
(2) Mid-site	(2) Private well	(2) Pond	(2) Waste
(3) Downstream	(3) Spring	(3) Collection System	(3) Other
(4) Run-off	(4) Lysimeter		
(5) Impounded	(5) Public W S		

JUN 9 1982

Name (Private Well, Stream, Spring, Impounded Water only): MONITOR WELL

L P C S M 0 1 0 (1)–(8) SITE INVENTORY NUMBER 1 6 3 0 5 0 0 1 (9)–(16)

MONITOR POINT NUMBER G 6 0 7 (17)–(20) DATE COLLECTED 0 4 2 9 8 2 (21)–(26)

ST. CLAIR Co. - LPC REGION 5 (27)

FAIRMONT CITY (Location) / METRO (Responsible Party)

Legal (1); Illegal (2); Indicate One: 1 (28) Board Order (X) (29)

Time Collected 8:10 a.m. p.m. Unable to collect sample (X) (30)

Stick-up 0.5 ft. (31)–(33) Depth to water (from T.O.C.) 4.6 ft. (34)–(36)

Sample temp. ___ ° (37)–(39) Background (X). . . . (40)

Ground water sampled by (Indicate one): (1) Bailing; (2) Pumping; (3) Other (Specify) ___ 2 (41)

Sample Appearance: CLEAR, SLIGHT SULFUR ODOR

Collector comments: Removed 1 vol. FILTERED
TOTAL DEPTH 20.2 Ft.

D. TOLAN, K. BOSIE, R. HORSEMANN — Collected by
DLPC — Div. or Company
K. BOSIE — Transported by
DLPC — Div. or Company

LAB USE ONLY

Lab No. B043424

Date Rec'd APR 30 1982

Rec'd by AR Time 11 a.m. p.m.

Sample temp. acceptable YES NO
Sample properly preserved YES NO

Date completed
Date forwarded JUN 7 1982

CHAMPAIGN
Supervisor Signature

Name
Address of Lab

LPCSM020
Lab Comments:

(27)–(36)
(37)–(46)
(47)–(56)
(57)–(66)
(67)–(76)

Private Lab (X) (77)
IEPA Lab (X) X (78)

		PARAMETERS+	PPM*
		LPCSM030	
27	X	Alkalinity[1]	1040.
31	X	Ammonia as N	18.
37	X	Arsenic As	0.007
44	X	Barium Ba	0.4
49	X	BOD -5	11.
53	X	Boron B	0.9
58	X	Cadmium Cd	0.0
64	X	Calcium Ca	510.
69	X	COD	72
73	X	Chloride Cl	700.
		LPCSM040	
27	X	Chromium Cr (tot)	0.0 U
33	X	Chromium Cr^{+6}	0.0
39	X	Copper Cu	0.02
45	X	Cyanide CN	0.00
52		Fecal Coli (#/100 ml)	.
56	X	Fluoride F	0.1
61	X	Hardness $CaCO_3$	1800.
65	X	Iron Fe	43.
70	X	Lead Pb	0.0
		LPCSM050	
27	X	Magnesium Mg	150.
32	X	Manganese Mn	3.8
38	X	Mercury Hg	0.0001
46	X	Nickel Ni	0.0
51	X	Nitrate-nitrite N	0.0
56		Oil and Grease	.
60	X	pH (Units)	6.6
63	X	Phenolics	0.010
70	X	Phosphorus P	0.95
76	X	Potassium K	17.
		LPCSM060	
27	X	R.O.E. (180°C)	2370.
31	X	Selenium Se	0.000
38	X	Silver Ag	0.00
44	X	Sodium Na	170.
49	X	SC (umhos/cm)	4050.
53	X	Sulfate SO_4	287.
58	X	Zinc Zn	0.0
63			.

+ Analyses are to be performed on unfiltered samples. *Values exceeding no. of places shown are reported in the lab comments section; tests requested but not run should also be explained in the lab comments section.

[1] Alkalinity is to be determined as ppm of $CaCO_3$ at pH 4.5.

H.W.

IL 532-0313
LPC 8 3/77

G 605

mR

ILLINOIS ENVIRONMENTAL PROTECTION AGENCY
DIVISION OF LAND/NOISE POLLUTION CONTROL
CHEMICAL ANALYSIS FORM

Key for Determining Type of Monitoring Point

(S) Surface Water	(G) Ground Water	(L) Leachate	(X) Special
(1) Upstream	(1) Monitor Well	(1) Flow or seep	(1) Soil
(2) Mid-site	(2) Private well	(2) Pond	(2) Waste
(3) Downstream	(3) Spring	(3) Collection System	(3) Other
(4) Run-off	(4) Lysimeter		
(5) Impounded	(5) Public W S		

RECEIVED JUN 9 1982

Name (Private Well, Stream, Spring, Impounded Water only): MONITOR WELL

(1) L P C S M 0 1 0 (8) SITE INVENTORY NUMBER (9) 1 6 3 0 5 0 0 1 (16)

MONITOR POINT NUMBER (17) G 6 0 5 (20) DATE COLLECTED (21) 0 4 2 9 8 2 (26)

ST. CLAIR Co. - LPC REGION (27) S

FAIRMONT CITY / METRO
(Location) (Responsible Party)

Legal (1); Illegal (2); Indicate One: (28) 1 Board Order (X) (29)

Time Collected 8:25 a.m. p.m. Unable to collect sample (X) (30)

Stick-up (31) 0.5 (33) ft. Depth to water (from T.O.C.) (34) 1.8 (36) ft.

Sample temp. (37) ___ (39) °C Background (X). . . . (40)

Ground water sampled by (Indicate one): (1) Bailing; (2) Pumping; (3) Other (Specify) ___ (41) 2

Sample Appearance: CLEAR, SLIGHT SULFUR ODOR

Collector comments: REMOVED 1 VOL. FILTERED
TOTAL DEPTH 17.4 FT.

D. TOLAN, K. BOSIE, R. HERSEMANN — Collected by
DLPC — Div. or Company
K. BOSIE — Transported by
DLPC — Div. or Company

LAB USE ONLY
Lab No. B043423
Date Rec'd APR. 30. 1982
Rec'd by AR Time 11 a.m. p.m.
Sample temp. acceptable YES NO
Sample properly preserved YES NO
Date completed
Date forwarded JUN 8 1982
CHAMPAIGN
Supervisor Signature
Name
Address of Lab

LPCSM020
Lab Comments:
(27) (36)
(37) (46)
(47) (56)
(57) (66)
(67) (76)
Private Lab (X)
IEPA Lab (X) X (77) (78)

		PARAMETERS+	PPM*
		LPCSM030	
27	X	Alkalinity[1]	807.
31	X	Ammonia as N	10.
37	X	Arsenic As	0.030
44	X	Barium Ba	0.5
49	X	BOD -5	8.
53	X	Boron B	0.7
58	X	Cadmium Cd	0.0
64	X	Calcium Ca	220.
69	X	COD	49.
73	X	Chloride Cl	136.
		LPCSM040	
27	X	Chromium Cr (tot)	0.00
33	X	Chromium Cr^{+6}	0.0
39	X	Copper Cu	0.01
45	X	Cyanide CN	0.00
52		Fecal Coli (#/100 ml)	
56	X	Fluoride F	0.1
61	X	Hardness $CaCO_3$	817.
65	X	Iron Fe	16.
70	X	Lead Pb	0.0
		LPCSM050	
27	X	Magnesium Mg	82.
32	X	Manganese Mn	0.92
38	X	Mercury Hg	0.0000
46	X	Nickel Ni	0.0
51	X	Nitrate-nitrite N	0.0
56		Oil and Grease	
60	X	pH (Units)	6.8
63	X	Phenolics	0.000
70	X	Phosphorus P	1.9
76	X	Potassium K	7.6
		LPCSM060	
27	X	R.O.E. (180°C)	901.
31	X	Selenium Se	0.000
38	X	Silver Ag	0.00
44	X	Sodium Na	66.
49	X	SC (umhos/cm)	1770.
53	X	Sulfate SO_4	27.
58	X	Zinc Zn	0.0
63			

+ Analyses are to be performed on unfiltered samples. *Values exceeding no. of places shown are reported in the lab comments section; tests requested but not run should also be explained in the lab comments section.

[1] Alkalinity is to be determined as ppm of $CaCO_3$ at pH 4.5.

H.W

IL 532-0313
LPC 8 3/77

G603

mP-

ILLINOIS ENVIRONMENTAL PROTECTION AGENCY
DIVISION OF LAND/NOISE POLLUTION CONTROL
CHEMICAL ANALYSIS FORM

Key for Determining Type of Monitoring Point

(S) Surface Water	(G) Ground Water	(L) Leachate	(X) Special
(1) Upstream	(1) Monitor Well	(1) Flow or seep	(1) Soil
(2) Mid-site	(2) Private well	(2) Pond	(2) Waste
(3) Downstream	(3) Spring	(3) Collection System	(3) Other
(4) Run-off	(4) Lysimeter		
(5) Impounded	(5) Public W S		

RECEIVED JUN 9 1982 EPA — DLPC STATE OFFICE

Name MONITOR WELL (Private Well, Stream, Spring, Impounded Water only)

(1) L P C S M O 1 0 (8) SITE INVENTORY NUMBER (9) 1 6 3 0 5 0 0 1 (16)

MONITOR POINT NUMBER (17) G 6 0 3 (20) DATE COLLECTED (21) 0 4 2 9 8 2 (26)

ST. CLAIR Co. - LPC REGION (27) S

FAIRMONT CITY (Location) METRO (Responsible Party)

Legal (1); Illegal (2); Indicate One: (28) 1 Board Order (X) (29)

Time Collected 7:05 a.m. p.m. Unable to collect sample (X) (30)

Stick-up (31) 0.5 (33) ft. Depth to water (from T.O.C.) (34) 3.8 (36) ft.

Sample temp. (37) ° (39) Background (X). . . . (40)

Ground water sampled by (Indicate one): (1) Bailing; (2) Pumping; (3) Other (Specify) (41) 2

Sample Appearance: CLEAR, NO ODOR

Collector comments: REMOVED 1 VOL. FILTERED TOTAL DEPTH 13.5

D. TOLAN, K. BOSIE, R. HERSEMANN — Collected by — DLPC — Div. or Company

K. BOSIE — Transported by — DLPC — Div. or Company

LAB USE ONLY

Lab No. B043422

Date Rec'd APR. 30. 1982

Rec'd by AR Time 11 a.m. p.m.

Sample temp. acceptable YES NO

Sample properly preserved YES NO

Date completed

Date forwarded ~~JUN 7 1982~~

CHAMPAIGN

Supervisor Signature

Name

Address of Lab

LPCSM020 Lab Comments:

(27) (36)

(37) (46)

(47) (56)

(57) (66)

(67) (76)

Private Lab (X)

IEPA Lab (X) X (77) (78)

LPCSM030

		PARAMETERS*	PPM*
27	X	Alkalinity[1]	642.
31	X	Ammonia as N	0.96
37	X	Arsenic As	0.010
44	X	Barium Ba	0.2
49	X	BOD -5	2
53	X	Boron B	0.7
58	X	Cadmium Cd	0.0
64	X	Calcium Ca	300.
69	X	COD	43.
73	X	Chloride Cl	268.

LPCSM040

27	X	Chromium Cr (tot)	0.00
33	X	Chromium Cr^{+6}	0.0
39	X	Copper Cu	0.02
45	X	Cyanide CN	0.00
52		Fecal Coli (#/100 ml)	
56	X	Fluoride F	0.6
61	X	Hardness $CaCO_3$	1030
65	X	Iron Fe	28.
70	X	Lead Pb	0.10

LPCSM050

27	X	Magnesium Mg	83.
32	X	Manganese Mn	7.3
38	X	Mercury Hg	0.0001
46	X	Nickel Ni	0.0
51	X	Nitrate-nitrite N	0.0
56		Oil and Grease	
60	X	pH (Units)	6.6
63	X	Phenolics	0.000
70	X	Phosphorus P	0.02
75	X	Potassium K	3.7

LPCSM060

27	X	R.O.E. (180°C)	1310.
31	X	Selenium Se	0.000
36	X	Silver Ag	0.00
44	X	Sodium Na	97.
49	X	SC (umhos/cm)	2250.
53	X	Sulfate SO_4	219.
58	X	Zinc Zn	0.0
63			

*Analyses are to be performed on ~~unfiltered~~ samples. *Values exceeding no. of places shown are reported in the lab comments section; tests requested but not run should also be explained in the lab comments section.

[1]Alkalinity is to be determined as ppm of $CaCO_3$ at pH 4.5.

H.W.

G 108

mR

ILLINOIS ENVIRONMENTAL PROTECTION AGENCY
DIVISION OF LAND/NOISE POLLUTION CONTROL
CHEMICAL ANALYSIS FORM

Key for Determining Type of Monitoring Point

(S) Surface Water	(G) Ground Water	(L) Leachate	(X) Special
(1) Upstream	(1) Monitor Well	(1) Flow or seep	(1) Soil
(2) Mid-site	(2) Private well	(2) Pond	(2) Waste
(3) Downstream	(3) Spring	(3) Collection System	(3) Other
(4) Run-off	(4) Lysimeter		
(5) Impounded	(5) Public W S		

RECEIVED JUN 9 1982 E.P.A. — STATE

Name (Private Well, Stream, Spring, Impounded Water only) MONITOR WELL

L P C S M 0 1 0 (1) (8) SITE INVENTORY NUMBER 16305001 (9) (16)

MONITOR POINT NUMBER G 1 0 8 (17) (20) DATE COLLECTED 0 4 2 9 8 2 (21) (26)

ST. CLAIR Co. - LPC REGION 5 (27)

FAIRMONT CITY / METRO
(Location) (Responsible Party)

Legal (1); Illegal (2); Indicate One: 1 (28) Board Order (X) (29)

Time Collected 8:45 a.m. p.m. Unable to collect sample (X) (30)

Stick-up 3.1 ft. (31) (33) Depth to water 4.9 ft. (from T.O.C.) (34) (36)

Sample temp. ° (37) (39) Background (X). . . . (40)

Ground water sampled by (Indicate one): (1) Bailing; (2) Pumping; (3) Other (Specify) 2 (41)

Sample Appearance: CLEAR, NO ODOR

Collector comments: REMOVED 1 VOL. FILTERED
TOTAL DEPTH 42.5 Ft.

D. TOLAN, K. BOSIE, R. HERSEMANN — DLPC
Collected by — Div. or Company

K. BOSIE — DLPC
Transported by — Div. or Company

LAB USE ONLY
Lab No. B043419
Date Rec'd APR. 30 1982
Rec'd by AR Time 11 a.m. p.m.
Sample temp. acceptable YES NO
Sample properly preserved YES NO
Date completed
Date forwarded JUN 7 1982
CHAMPAIGN
Supervisor Signature
Name
Address of Lab

LPCSM020
Lab Comments:
(27) (36)
(37) (46)
(47) (56)
(57) (66)
(67) (76)
Private Lab (X) (77)
IEPA Lab (X) X (78)

LPCSM030

		PARAMETERS+	PPM*
27	X	Alkalinity[1]	346.
31	X	Ammonia as N	0.0
37	X	Arsenic As	0.004
44	X	Barium Ba	0.8
49	X	BOD -5	3.
53	X	Boron B	0.2
58	X	Cadmium Cd	0.0
64	X	Calcium Ca	96.
69	X	COD	25.
73	X	Chloride Cl	10.

LPCSM040

27	X	Chromium Cr (tot)	0.00
33	X	Chromium Cr^{+6}	0.0
39	X	Copper Cu	0.01
45	X	Cyanide CN	0.00
52		Fecal Coli (#/100 ml)	
56	X	Fluoride F	0.3
61	X	Hardness $CaCO_3$	369.
65	X	Iron Fe	3.2
70	X	Lead Pb	0.0

LPCSM050

27	X	Magnesium Mg	21.
32	X	Manganese Mn	0.21
38	X	Mercury Hg	0.0000
46	X	Nickel Ni	0.0
51	X	Nitrate-nitrite N	0.0
56		Oil and Grease	
60	X	pH (Units)	7.1
63	X	Phenolics	0.000
70	X	Phosphorus P	0.60
76	X	Potassium K	5.3

LPCSM060

27	X	R.O.E. (180°C)	415.
31	X	Selenium Se	0.000
38	X	Silver Ag	0.00
44	X	Sodium Na	16.
49	X	SC (umhos/cm)	760.
53	X	Sulfate SO_4	75.
58	X	Zinc Zn	0.0
63			

+Analyses are to be performed on unfiltered samples. *Values exceeding no. of places shown are reported in the lab comments section; tests requested but not run should also be explained in the lab comments section.

[1]Alkalinity is to be determined as ppm of $CaCO_3$ at pH 4.5.

H.W.

IL 532-0313
LPC 8 3/77

mR

ILLINOIS ENVIRONMENTAL PROTECTION AGENCY
DIVISION OF LAND/NOISE POLLUTION CONTROL
CHEMICAL ANALYSIS FORM

Key for Determining Type of Monitoring Point

(S) Surface Water	(G) Ground Water	(L) Leachate	(X) Special
(1) Upstream	(1) Monitor Well	(1) Flow or seep	(1) Soil
(2) Mid-site	(2) Private well	(2) Pond	(2) Waste
(3) Downstream	(3) Spring	(3) Collection System	(3) Other
(4) Run-off	(4) Lysimeter		
(5) Impounded	(5) Public W S		

RECEIVED JUN 9 1982 DLPC

Name (Private Well, Stream, Spring, Impounded Water only): MONITOR WELL

(1) LPCSM010 (8) SITE INVENTORY NUMBER (9) 16305001 (16)

MONITOR POINT NUMBER (17) G107 (20) DATE COLLECTED (21) 042982 (26)

St. CLAIR Co. - LPC REGION (27) S

FAIRMONT CITY / METRO
(Location) (Responsible Party)

Legal (1); Illegal (2); Indicate One: (28) 1 Board Order (X) (29)

Time Collected _____ a.m. p.m. Unable to collect sample (X) (30)

Stick-up (31) 1.9 (33) ft. Depth to water (from T.O.C.) (34) 2.6 (36) ft.

Sample temp. (37) ___ (39) °F Background (X). . . . (40)

Ground water sampled by (Indicate one): (1) Bailing; (2) Pumping; (3) Other (Specify) _____ (41) 2

Sample Appearance: CLEAR, SLIGHT SULFUR ODOR

Collector comments: REMOVED 1 VOL. FILTERED. TOTAL DEPTH 18.2 FT.

D. TOLAN, K. BOSIE, R. HERSEMANN — Collected by
DLPC — Div. or Company
K. BOSIE — Transported by
DLPC — Div. or Company

LAB USE ONLY

Lab No. B043418

Date Rec'd APR 30 1982

Rec'd by AR Time 11 a.m. p.m.

Sample temp. acceptable YES NO

Sample properly preserved YES NO

Date completed

Date forwarded JUN 7 1982

CHAMPAIGN
Supervisor Signature

Name
Address of Lab

LPCSM020
Lab Comments:

(27) (36)
(37) (46)
(47) (56)
(57) (66)
(67) (76)

Private Lab (X)
IEPA Lab (X) X (77) (78)

LPCSM030

		PARAMETERS*	PPM*
27	X	Alkalinity[1]	789.
31	X	Ammonia as N	10.
37	X	Arsenic As	0.032
44	X	Barium Ba	0.6
49	X	BOD -5	6.
53	X	Boron B	0.5
58	X	Cadmium Cd	0.0
64	X	Calcium Ca	180.
69	X	COD	48.
73	X	Chloride Cl	19.

LPCSM040

27	X	Chromium Cr (tot)	0.00
33	X	Chromium Cr^{+6}	0.0
39	X	Copper Cu	0.00
45	X	Cyanide CN	0.00
52		Fecal Coli (#/100 ml)	
56	X	Fluoride F	0.1
61	X	Hardness $CaCO_3$	710.
65	X	Iron Fe	13.
70	X	Lead Pb	0.0

LPCSM050

27	X	Magnesium Mg	70.
32	X	Manganese Mn	0.43
38	X	Mercury Hg	0.0000
46	X	Nickel Ni	0.0
51	X	Nitrate-nitrite N	0.0
56		Oil and Grease	
60	X	pH (Units)	6.8
63	X	Phenolics	0.000
70	X	Phosphorus P	1.8
76	X	Potassium K	6.2

LPCSM060

27	X	R.O.E. (180°C)	533.
31	X	Selenium Se	0.001
38	X	Silver Ag	0.00
44	X	Sodium Na	23.
49	X	SC (umhos/cm)	1370.
53	X	Sulfate SO_4	11.
58	X	Zinc Zn	0.0
63			

*Analyses are to be performed on unfiltered samples. *Values exceeding no. of places shown are reported in the lab comments section; tests requested but not run should also be explained in the lab comments section.

[1]Alkalinity is to be determined as ppm of $CaCO_3$ at pH 4.5.

H.W.

IL 532-0313
LPC 8 2/77

G106

mR

ILLINOIS ENVIRONMENTAL PROTECTION AGENCY
DIVISION OF LAND/NOISE POLLUTION CONTROL
CHEMICAL ANALYSIS FORM

Key for Determining Type of Monitoring Point

(S) Surface Water	(G) Ground Water	(L) Leachate	(X) Special
(1) Upstream	(1) Monitor Well	(1) Flow or seep	(1) Spin
(2) Mid-site	(2) Private well	(2) Pond	(2) Waste
(3) Downstream	(3) Spring	(3) Collection System	(3) Other
(4) Run-off	(4) Lysimeter		
(5) Impounded	(5) Public W S		

JUN 9 198

Name MONITOR WELL (Private Well, Stream, Spring, Impounded Water only)

(1) L P C S M 0 1 0 (8) SITE INVENTORY NUMBER (9) 1 6 3 0 5 0 0 1 (16)

MONITOR POINT NUMBER (17) G 1 0 6 (20) DATE COLLECTED (21) 0 4 2 9 8 2 (26)

ST. CLAIR Co. - LPC REGION (27) S

FAIRMONT CITY / METRO
(Location) (Responsible Party)

Legal (1); Illegal (2); Indicate One: (28) 1 Board Order (X) (29)

Time Collected 10:20 a.m. p.m. Unable to collect sample (X) (30)

Stick-up (31) 0.4 (33) ft. Depth to water (from T.O.C.) (34) 8.1 (36) ft.

Sample temp. (37) ___ (39) ° Background (X). . . . (40)

Ground water sampled by (Indicate one): (1) Bailing; (2) Pumping; (3) Other (Specify) ___ (41) 2

Sample Appearance: CLEAR, NO ODOR

Collector comments: REMOVED 1 VOL. FILTERED
TOTAL DEPTH 26.5 Ft.

D. TOLAN, K. BOSIE, R. HERSEMANN — Collected by — DLPC — Div. or Company

K. BOSIE — Transported by — DLPC — Div. or Company

LAB USE ONLY

Lab No. B043417

Date Rec'd APR. 30. 1982

Rec'd by AR Time 11 a.m. p.m.

Sample temp. acceptable YES NO

Sample properly preserved YES NO

Date completed

Date forwarded JUN 7 1982 CHAMPAIGN

Supervisor Signature

Name

Address of Lab

LPCSM020
Lab Comments:

(27) ___ (36)

(37) ___ (46)

(47) ___ (56)

(57) ___ (66)

(67) ___ (76)

Private Lab (X)

IEPA Lab (X) X (77) (78)

LPCSM030

		PARAMETERS*	PPM*
27	X	Alkalinity[1]	385.
31	X	Ammonia as N	0.44
37	X	Arsenic As	0.000
44	X	Barium Ba	0.0
49	X	BOD -5	0.
53	X	Boron B	0.6
58	X	Cadmium Cd	0.0
64	X	Calcium Ca	110.
69	X	COD	13.
73	X	Chloride Cl	62.

LPCSM040

27	X	Chromium Cr (tot)	0.00
33	X	Chromium Cr^{+6}	0.0
39	X	Copper Cu	0.02
45	X	Cyanide CN	0.00
52		Fecal Coli (#/100 ml)	
56	X	Fluoride F	0.4
61	X	Hardness $CaCO_3$	504.
65	X	Iron Fe	0.0
70	X	Lead Pb	0.0

LPCSM050

27	X	Magnesium Mg	20.
32	X	Manganese Mn	0.11
38	X	Mercury Hg	0.0000
46	X	Nickel Ni	0.0
51	X	Nitrate-nitrite N	0.0
56		Oil and Grease	
60	X	pH (Units)	7.2
63	X	Phenolics	0.000
70	X	Phosphorus P	0.04
76	X	Potassium K	6.8

LPCSM060

27	X	R.O.E. (180°C)	642.
31	X	Selenium Se	0.000
38	X	Silver Ag	0.00
44	X	Sodium Na	56.
49	X	SC (umhos/cm)	1200.
53	X	Sulfate SO_4	201.
58	X	Zinc Zn	0.0
63			

*Analyses are to be performed on unfiltered samples. *Values exceeding no. of places shown are reported in the lab comments section; tests requested but not run should also be explained in the lab comments section.

[1]Alkalinity is to be determined as ppm of $CaCO_3$ at pH 4.5.

H.W.

IL 532-0313
LPC 8 3/77