2.3 HRS

Uncontrolled Hazardous Waste Site Rating 31st Street Landfill

February 26, 1988

Prepared For:

Mr. Arthur A. Daniels
John Sexton Sand & Gravel Corp.
1815 South Wolf Rd.
Hillside, IL 60162

Prepared By:

Richard W. Eldredge, P.E., President
Eldredge Engineering Associates, Inc.
1601 N. Bond St., Suite 101
Naperville, IL 60540
(312) 369-2901
FAX No. (312) 369-1440

US EPA RECORDS CENTER REGION 5
486807

eldredge engineering associates, inc.
1601 n. bond street
naperville, illinois 60540
(312) 369-2901

February 26, 1988

Mr. Arthur A. Daniels
John Sexton Contractors Co.
1815 S. Wolf Rd.
Hillside, IL 60162

Re: Uncontrolled Hazardous Waste Site Rating: 31st Street Landfill [171-27]

Dear Mr. Daniels:

Pursuant to your request, we are providing additional documentation pertaining to the 31st Street Sanitary Landfill. The updated exhibits reflect new information that was developed as a result of IEPA's intent to place the site on the SRAPL list.

After learning of the IEPA's scoring effort, and possible inclusion of the site on the SRAPL list, an additional four wells were installed on-site. The wells were constructed and screened to permit the measurement of the piezometric surface within the dolomitic upper aquifer. The screened intervals for the wells (approximately 550' - 560' U.S.G.S. Datum) were placed with the objective of producing a measurable piezometric surface in the dolomite strata, regardless of seasonal fluctuations within the aquifer.

Documentation for the well installation program, in addition to relevant site-specific records, are appended as exhibits:

Exhibit A:	USEPA Site Inspection Report (by Ecology and Environment)	15 sheets
Exhibit B:	HRS Scoring Package and Documentation Records (by Ecology and Environment)	27 sheets
Exhibit C:	Well Inventory of Western Cook and Eastern DuPage Counties	11 sheets
Exhibit D:	Well Inventory Map of Western Cook and Eastern DuPage Counties (24" x 36")	1 sheet
	Well Location Guide	1 sheet

Exhibit E

E-1:	Monitoring Well Locations - Revised	1 sheet
E-2:	Records of Subsurface Exploration and Well Details	14 sheets
E-3:	Groundwater Contour Map	
	B. Deep Wells ("R")	1 sheet
E-4:	Permeabilities of Dolomitic Bedrock	1 sheet

Based on the supplemental subsurface investigation, a preliminary evaluation of the data is provided as follows:

1. Each of the new piezometers has been screened at an elevation well below (>60') the piezometric surface of the first aquifer beneath the site.

2. The dolomite bedrock has permeabilities which vary from 2.1×10^{-4} to 1.3×10^{-5} cm/sec based on well recharge calculations.

3. Flow direction has been confirmed to be in a north to south direction, which is in agreement with findings of the Illinois Water Survey, the Illinois Geologic Survey, and other investigations.

4. Two of the original observation wells, G103 and G104, represent the piezometric level within the dolomite even though they are finished in the sand and gravels immediately above it. Thus, the interconnection of the sand and gravel deposits with the underlying dolomite has been confirmed. In addition, the groundwater flow direction of north to south for both the sand and gravel deposits, and for the dolomite, also implies hydraulic interconnection between the bedrock and overlying deposits.

The measurements performed on the deep wells confirm previous assumptions that the general groundwater gradient is to the south. Please contact our office at your convenience if we can be of assistance.

Very truly yours,

ELDREDGE ENGINEERING ASSOCIATES, INC.

Richard W. Eldredge /ta

Richard W. Eldredge, P.E.
President

RWE:par
Enclosures

EXHIBIT A

EXHIBIT A

USEPA Site Inspection Report
(By Ecology and Environment)

Reference #6 RS-5303-01F IL-2041

EPA POTENTIAL HAZARDOUS WASTE SITE SITE INSPECTION REPORT PART 1 - SITE LOCATION AND INSPECTION INFORMATION

I. IDENTIFICATION

01 STATE	02 SITE NUMBER
IL	D006066467

II. SITE NAME AND LOCATION

01 SITE NAME (Legal, common, or descriptive name of site)	02 STREET, ROUTE NO., OR SPECIFIC LOCATION IDENTIFIER
HINSDALE SEXTON LANDFILL	11700 W. 31st Street

03 CITY	04 STATE	05 ZIP CODE	06 COUNTY	07 COUNTY CODE	08 CONG DIST
HINSDALE	IL	60521	Cook	031	13

09 COORDINATES LATITUDE	LONGITUDE	10 TYPE OF OWNERSHIP (Check one)
41 50 00.0	087 55 00.0	☒ A. PRIVATE ☐ B. FEDERAL ☐ C. STATE ☐ D. COUNTY ☐ E. MUNICIPAL ☐ F. OTHER ☐ G. UNKNOWN

III. INSPECTION INFORMATION

01 DATE OF INSPECTION	02 SITE STATUS	03 YEARS OF OPERATION
10 25 84 / 11 19 84 (MONTH DAY YEAR)	☒ ACTIVE ☐ INACTIVE	1959 / present (BEGINNING YEAR / ENDING YEAR) ___ UNKNOWN

04 AGENCY PERFORMING INSPECTION (Check all that apply)

☐ A. EPA ☒ B. EPA CONTRACTOR Ecology & Environment Inc. (Name of firm) ☐ C. MUNICIPAL ☐ D. MUNICIPAL CONTRACTOR ___ (Name of firm)
☐ E. STATE ☐ F. STATE CONTRACTOR ___ (Name of firm) ☐ G. OTHER ___ (Specify)

05 CHIEF INSPECTOR	06 TITLE	07 ORGANIZATION	08 TELEPHONE NO
Dan Cozza	Biologist	Ecology & Environment	(312) 663-9415

09 OTHER INSPECTORS	10 TITLE	11 ORGANIZATION	12 TELEPHONE NO.
Mike Giffoid	Earth Scientist	Ecology & Environment	(312) 663-9415
Dan Sewell	Biologist	Ecology & Environment	(312) 663-9415
			( )
			( )
			( )

13 SITE REPRESENTATIVES INTERVIEWED	14 TITLE	15 ADDRESS	16 TELEPHONE NO
Sheryl Rosen Smith	Civil Engineer Record Analyst	JOHN SEXTON Contractors Co. 1815 S. Wolf Rd Hillside IL 60162	(312) 449-1250
Larry C. Boettcher	Director Solid Waste Division	" "	(") "
Joseph R. Benedict Jr.	Director of Chemical Processes	" "	(") "
Michael R. Keil	Project Engineer	Ethredge Engineering Associates 16 E. Naperville Bend St. Naperville IL 60540	(312) 369-2901
			( )
			( )

17 ACCESS GAINED BY (Check one)	18 TIME OF INSPECTION	19 WEATHER CONDITIONS
☒ PERMISSION ☐ WARRANT	10-25-84 11-19-84 9.00 AM	Rainy - overcast - cold - overcast

IV. INFORMATION AVAILABLE FROM

01 CONTACT	02 OF (Agency/Organization)	03 TELEPHONE NO
Dr. Roy Jeffs	U.S. Environmental Protection Agency	(312) 886-0363

04 PERSON RESPONSIBLE FOR SITE INSPECTION FORM	05 AGENCY	06 ORGANIZATION	07 TELEPHONE NO.	08 DATE
Dan Cozza / Mike Giffoid	—	Ecology & Environment	312-663-9415	02 05 85 (MONTH DAY YEAR)

EPA FORM 2070-13 (7-81)

EPA

POTENTIAL HAZARDOUS WASTE SITE
SITE INSPECTION REPORT
PART 2 - WASTE INFORMATION

I. IDENTIFICATION

01 STATE	02 SITE NUMBER
IL	D006064 67

II. WASTE STATES, QUANTITIES, AND CHARACTERISTICS

01 PHYSICAL STATES (Check all that apply)

- X A SOLID
- B POWDER FINES
- X C SLUDGE
- D OTHER _____ (Specify)
- E SLURRY
- X F LIQUID
- G GAS

02 WASTE QUANTITY AT SITE (Measures of waste quantities must be independent)

TONS _____

CUBIC YARDS 16,000,000

SEE BELOW

~~NO. OF DRUMS~~ _____

03 WASTE CHARACTERISTICS (Check all that apply)

- X A TOXIC
- X B CORROSIVE
- C RADIOACTIVE
- X D PERSISTENT
- E SOLUBLE
- F INFECTIOUS
- G FLAMMABLE
- H IGNITABLE
- I HIGHLY VOLATILE
- J EXPLOSIVE
- K REACTIVE
- L INCOMPATIBLE
- M NOT APPLICABLE

III. WASTE TYPE

CATEGORY	SUBSTANCE NAME	01 GROSS AMOUNT	02 UNIT OF MEASURE	03 COMMENTS
X SLU	SLUDGE			SEE NOTE BELOW
X OLW	OILY WASTE			SEE NOTE BELOW
SOL	SOLVENTS			
PSD	PESTICIDES			
OCC	OTHER ORGANIC CHEMICALS			
X IOC	INORGANIC CHEMICALS			SEE NOTE BELOW
ACD	ACIDS			
BAS	BASES			
X MES	HEAVY METALS			from MSD sludge tanker - See note below

IV. HAZARDOUS SUBSTANCES (See Appendix for most frequently cited CAS Numbers)

01 CATEGORY	02 SUBSTANCE NAME	03 CAS NUMBER	04 STORAGE/DISPOSAL METHOD	05 CONCENTRATION	06 MEASURE OF CONCENTRATION
	Numerous Special Waste permits have been aproved for Hinsdale				
Sexton.	These special wastes include sludges from MSD which were tested and				
found	not to be toxic, liquids and sludges from CPC with pH of 4.5 and				
slight	heavy metal content, oily sludge from Electromotive Corp with				up to
8 ppm	of CN, Iron-calcium sludge from Borg Warner with up to 31.5 ppm				Cr+6
	Total volume of hazardous waste or hazardous components of				
waste	is not known.	16,000,000	cu yds reported above as waste quantity		
is the	total volume of the landfill as stated on the 103c notification.				
	Special permitted waste was mixed in with daily household-municipal refuse.				
	Copies of the special waste permits can be found in the IEPA files in Maywood				
	The state files also indicate that asbestos has been accepted.				
			↳ could not document asbestos waste disposal - P.C.		

V. FEEDSTOCKS (See Appendix for CAS Numbers)

CATEGORY	01 FEEDSTOCK NAME	02 CAS NUMBER	CATEGORY	01 FEEDSTOCK NAME	02 CAS NUMBER
FDS			FDS		
FDS			FDS		
FDS			FDS		
FDS			FDS		

VI. SOURCES OF INFORMATION (Cite specific references, e.g., state files, sample analysis, reports)

IEPA files DLPC Maywood

on-site inspection with interview with Sexton Representatives

EPA FORM 2070-13 (7-81)

EPA

POTENTIAL HAZARDOUS WASTE SITE
SITE INSPECTION REPORT
PART 3 - DESCRIPTION OF HAZARDOUS CONDITIONS AND INCIDENTS

I. IDENTIFICATION
01 STATE: IL
02 SITE NUMBER: DD0606467

II. HAZARDOUS CONDITIONS AND INCIDENTS

01 [X] A GROUNDWATER CONTAMINATION — 02 [ ] OBSERVED (DATE _____) — [X] POTENTIAL — [ ] ALLEGED
03 POPULATION POTENTIALLY AFFECTED: 82600+
04 NARRATIVE DESCRIPTION
Potential, Site is sampled quarterly with results sent to IEPA DLPC in Maywood. At time of inspection on 11-15-84, only one well was sampled, the other 3 were dry. Well G-103S showed no contamination with either organics or inorganics. Each well is believed to be in a separate sand + gravel lens, but G-103S is set at a downgradient elevation. Quarterly samples of the 4 wells, show no significant contamination

01 [X] B SURFACE WATER CONTAMINATION — 02 [ ] OBSERVED (DATE _____) — [X] POTENTIAL — [ ] ALLEGED
03 POPULATION POTENTIALLY AFFECTED: 0
04 NARRATIVE DESCRIPTION
Drainage from site runoff may reach Salt Creek and the Des Plaines River via unnamed drainage ditches along Cermak Road and Tri-State Tollway, however, cover thickness over the fill should preclude overland flow of contaminants. See permit section for NPDES withdrawal

01 [X] C CONTAMINATION OF AIR — 02 [ ] OBSERVED (DATE _____) — [ ] POTENTIAL — [X] ALLEGED
03 POPULATION POTENTIALLY AFFECTED: 0
04 NARRATIVE DESCRIPTION
Potential due to methane vents.
Residents periodically complain of odor problems

01 [X] D FIRE/EXPLOSIVE CONDITIONS — 02 [ ] OBSERVED (DATE _____) — [X] POTENTIAL — [ ] ALLEGED
03 POPULATION POTENTIALLY AFFECTED: 20774 (1 mile radius)
04 NARRATIVE DESCRIPTION
Potential due to methane produced by the covered landfill - Methane presently vented and burned. No fires on-site to date.

01 [X] E DIRECT CONTACT — 02 [ ] OBSERVED (DATE _____) — [X] POTENTIAL — [ ] ALLEGED
03 POPULATION POTENTIALLY AFFECTED: 1444
04 NARRATIVE DESCRIPTION
Potential but unlikely. Daily cover and portions closed have sufficient final cover. Site is fenced and has a locked gate

01 [X] F. CONTAMINATION OF SOIL — 02 [ ] OBSERVED (DATE _____) — [X] POTENTIAL — [ ] ALLEGED
03 AREA POTENTIALLY AFFECTED: 275 acres
04 NARRATIVE DESCRIPTION
Site is a landfill covering approximately 275 acres, no leachate was observed during inspection

01 [X] G DRINKING WATER CONTAMINATION — 02 [ ] OBSERVED (DATE _____) — [X] POTENTIAL — [ ] ALLEGED
03 POPULATION POTENTIALLY AFFECTED: 82600+
04 NARRATIVE DESCRIPTION
Potential but unlikely - Residents in Neighboring Hinsdale, Western Springs, Oakbrook & Elmhurst, are serviced by groundwater wells for drinking water, but the wells are deep into bedrock ranging from 198 to 1913' deep. Private residential wells within 3 miles have wells screened at less than 100'

01 [X] H WORKER EXPOSURE/INJURY — 02 [ ] OBSERVED (DATE _____) — [X] POTENTIAL — [ ] ALLEGED
03 WORKERS POTENTIALLY AFFECTED: 15-20
04 NARRATIVE DESCRIPTION
Potential due to special waste being mixed in with municipal refuse. Landfill is preparing for final closure within a year or so.

01 [X] I. POPULATION EXPOSURE/INJURY — 02 [ ] OBSERVED (DATE _____) — [X] POTENTIAL — [ ] ALLEGED
03 POPULATION POTENTIALLY AFFECTED: 82600+
04 NARRATIVE DESCRIPTION
Dependent on A, B and G above
Residents nearby complain periodically about odors

EPA FORM 2070-13 (7-81)

EPA

POTENTIAL HAZARDOUS WASTE SITE
SITE INSPECTION REPORT
PART 3 - DESCRIPTION OF HAZARDOUS CONDITIONS AND INCIDENTS

I. IDENTIFICATION	
01 STATE	02 SITE NUMBER
IL	D006067

II. HAZARDOUS CONDITIONS AND INCIDENTS (Continued)

01 ☐ J DAMAGE TO FLORA — 02 ☐ OBSERVED (DATE _____) — ☒ POTENTIAL — ☐ ALLEGED
04 NARRATIVE DESCRIPTION

NONE NOTED AT TIME OF INSPECTION

01 ☐ K DAMAGE TO FAUNA — 02 ☐ OBSERVED (DATE _____) — ☒ POTENTIAL — ☐ ALLEGED
04 NARRATIVE DESCRIPTION (Include name(s) of species)

NONE NOTED AT TIME OF INSPECTION

01 ☐ L CONTAMINATION OF FOOD CHAIN — 02 ☐ OBSERVED (DATE _____) — ☒ POTENTIAL — ☐ ALLEGED
04 NARRATIVE DESCRIPTION

DEPENDENT ON J + K above

01 ☐ M UNSTABLE CONTAINMENT OF WASTES (Spills, Runoff, Standing liquids, Leaking drums) — 02 ☐ OBSERVED (DATE _____) — ☒ POTENTIAL — ☐ ALLEGED
03 POPULATION POTENTIALLY AFFECTED: 82600 — 04 NARRATIVE DESCRIPTION

One well of 4 was sampleable at time of 11-19-84 inspection and no contamination was found. The well sampled is believed to be downgradient from at least part of the landfill. Cover on the site meets IEPA standards.

01 ☐ N DAMAGE TO OFFSITE PROPERTY — 02 ☐ OBSERVED (DATE _____) — ☒ POTENTIAL — ☐ ALLEGED
04 NARRATIVE DESCRIPTION

NONE NOTED DURING time of inspection

01 ☐ O CONTAMINATION OF SEWERS, STORM DRAINS, WWTPs — 02 ☐ OBSERVED (DATE _____) — ☐ POTENTIAL — ☐ ALLEGED
04 NARRATIVE DESCRIPTION

N/A

01 ☐ P ILLEGAL/UNAUTHORIZED DUMPING — 02 ☐ OBSERVED (DATE _____) — ☐ POTENTIAL — ☐ ALLEGED
04 NARRATIVE DESCRIPTION

N/A

05 DESCRIPTION OF ANY OTHER KNOWN, POTENTIAL, OR ALLEGED HAZARDS

N/A

III. TOTAL POPULATION POTENTIALLY AFFECTED: 82600

IV. COMMENTS

V. SOURCES OF INFORMATION (Cite specific references, e.g., State files, sample analysis, reports)

IEPA DLPC files Maywood
On-site inspections with interview with Sexton Representatives

EPA FORM 2070-13 (7-81)

EPA

POTENTIAL HAZARDOUS WASTE SITE
SITE INSPECTION
PART 4 - PERMIT AND DESCRIPTIVE INFORMATION

I. IDENTIFICATION

01 STATE	02 SITE NUMBER
IL	D 006064467

II. PERMIT INFORMATION

01 TYPE OF PERMIT ISSUED (Check all that apply)	02 PERMIT NUMBER	03 DATE ISSUED	04 EXPIRATION DATE	05 COMMENTS
☒ A. NPDES				SEE NOTE BELOW
☐ B. UIC				
☐ C. AIR				
☐ D. RCRA				
☐ E. RCRA INTERIM STATUS				
☐ F. SPCC PLAN				
☒ G. STATE (Specify)	1974-43			
☐ H. LOCAL (Specify)				
☒ I. OTHER (Specify)				Special waste permits
☐ J. NONE				

III. SITE DESCRIPTION

01 STORAGE/DISPOSAL (Check all that apply)	02 AMOUNT	03 UNIT OF MEASURE
☐ A. SURFACE IMPOUNDMENT		
☐ B. PILES		
☐ C. DRUMS, ABOVE GROUND		
☐ D. TANK, ABOVE GROUND		
☐ E. TANK, BELOW GROUND		
☒ F. LANDFILL	16,000,000	cu yds
☐ G. LANDFARM		
☐ H. OPEN DUMP		
☐ I. OTHER (Specify)		

04 TREATMENT (Check all that apply) N/A

- ☐ A. INCENERATION
- ☐ B. UNDERGROUND INJECTION
- ☐ C. CHEMICAL/PHYSICAL
- ☐ D. BIOLOGICAL
- ☐ E. WASTE OIL PROCESSING
- ☐ F. SOLVENT RECOVERY
- ☐ G. OTHER RECYCLING/RECOVERY
- ☐ H. OTHER (Specify)

05 OTHER

- ☒ A. BUILDINGS ON SITE: Scale house

06 AREA OF SITE: 274 acres

07 COMMENTS

NPDES → the site reported surface water runoff discharges into an intermittent ditch which are received by Salt Creek + Des Plaines River. Discharges occur only after precipitation and thawing - discharging at 3 different locations. No NPDES permit was required as per IEPA

IV. CONTAINMENT

01 CONTAINMENT OF WASTES (Check one)

☒ A. ADEQUATE, SECURE ☐ B. MODERATE ☐ C. INADEQUATE, POOR ☐ D. INSECURE, UNSOUND, DANGEROUS

02 DESCRIPTION OF DRUMS, DIKING, LINERS, BARRIERS, ETC

According to the soil Investigation report by W.H. Flood and Co. Inc site was underlined with clay tills ranging from 11-44' thick prior to landfilling, how much of this clay till was excavated for cover is not known, but it is believed that at least 5' was left intact as bottom liner.

V. ACCESSIBILITY

01 WASTE EASILY ACCESSIBLE ☐ YES ☒ NO

02 COMMENTS Site is surrounded by fences and a locked gate. Daily cover is applied and sections of the fill have received final cover

VI. SOURCES OF INFORMATION (Cite specific references, e.g. state files, sample analysis, reports)

IEPA files DLPC Maywood

W. H. Flood + Co Inc Soil Investigation No 7205-0010 and Hydrological Investigation # 7205-0010-1

On-site inspection with interview with Sexton Representatives

EPA FORM 2070-13 (7-81)

EPA

POTENTIAL HAZARDOUS WASTE SITE
SITE INSPECTION REPORT
PART 6 - WATER, DEMOGRAPHIC, AND ENVIRONMENTAL DATA

I. IDENTIFICATION

01 STATE	02 SITE NUMBER
IL	D006066467

II. DRINKING WATER SUPPLY

01 TYPE OF DRINKING SUPPLY (Check as applicable)

	SURFACE	WELL
COMMUNITY	A ☐	B ☒
NON-COMMUNITY	C. ☐	D. ☒

02 STATUS

ENDANGERED	AFFECTED	MONITORED
A ☐	B ☐	C ☒
D ☐	E. ☐	F. ☒

03 DISTANCE TO SITE

4 community well supplies
A. within 3 (mi)
B. At least 40 within 3 miles

III. GROUNDWATER

01 GROUNDWATER USE IN VICINITY (Check one)

☐ A. ONLY SOURCE FOR DRINKING ☒ B. DRINKING (Other sources available), COMMERCIAL, INDUSTRIAL, IRRIGATION (No other water sources available) ☐ C. COMMERCIAL, INDUSTRIAL, IRRIGATION (Limited other sources available) ☐ D. NOT USED, UNUSEABLE

02 POPULATION SERVED BY GROUND WATER 82600+

03 DISTANCE TO NEAREST DRINKING WATER WELL < 1/2 (mi)

04 DEPTH TO GROUNDWATER	05 DIRECTION OF GROUNDWATER FLOW	06 DEPTH TO AQUIFER OF CONCERN	07 POTENTIAL YIELD OF AQUIFER	08 SOLE SOURCE AQUIFER
5-26 (ft)	Southerly w/in Bedrock variable in shallowest aquifer believed easterly	37-1913 (ft)	2,450,000 (gpd) Hinsdale 1977	☐ YES ☒ NO

09 DESCRIPTION OF WELLS (Including usage, depth, and location relative to population and buildings)

Groundwater monitoring wells surround the site
Ten community wells, at least 40 within 3 miles of the site range from 37-347'
Surrounding community wells, all set in bedrock, ranging in depths from Hinsdale's 12 wells between 418-353', Oakbrook 1 well 351', 4 wells 1458-1522', Elmhurst 7 wells 958-1567', Westmont Springs 2 wells 313-364', 2 wells 1256-1913'

10 RECHARGE AREA		11 DISCHARGE AREA	
☐ YES ☐ NO	COMMENTS: Unknown	☐ YES ☐ NO	COMMENTS: Unknown

IV. SURFACE WATER

01 SURFACE WATER USE (Check one)

☒ A. RESERVOIR, RECREATION, DRINKING WATER SOURCE ☐ B. IRRIGATION, ECONOMICALLY IMPORTANT RESOURCES ☐ C. COMMERCIAL, INDUSTRIAL ☐ D. NOT CURRENTLY USED

02 AFFECTED/POTENTIALLY AFFECTED BODIES OF WATER

NAME	AFFECTED	DISTANCE TO SITE
Unnamed ditches	☐	0 (mi)
Salt Creek	☐	1/4 - 1/2 (mi)
Des Plaines River	☐	3+ (mi)

V. DEMOGRAPHIC AND PROPERTY INFORMATION

01 TOTAL POPULATION WITHIN

ONE (1) MILE OF SITE	TWO (2) MILES OF SITE	THREE (3) MILES OF SITE
A. 1444 (NO. OF PERSONS)	B. 20774 (NO. OF PERSONS)	C. 81126 (NO. OF PERSONS)

02 DISTANCE TO NEAREST POPULATION < 1/4 (mi)

03 NUMBER OF BUILDINGS WITHIN TWO (2) MILES OF SITE 5466

04 DISTANCE TO NEAREST OFF-SITE BUILDING < 1/4 (mi)

05 POPULATION WITHIN VICINITY OF SITE (Provide narrative description of nature of population within vicinity of site, e.g., rural, village, commercial, residential, urban area)

Residential to the East
Public Golf Course to the North and South
Forest Preserve to the South,
Tollway to the west, Residential to the far west

EPA

POTENTIAL HAZARDOUS WASTE SITE
SITE INSPECTION REPORT
PART 5 - WATER, DEMOGRAPHIC, AND ENVIRONMENTAL DATA

I. IDENTIFICATION
01 STATE: IL
02 SITE NUMBER: D006064677

VI. ENVIRONMENTAL INFORMATION

01 PERMEABILITY OF UNSATURATED ZONE (Check one)

☐ A $10^{-6} - 10^{-8}$ cm/sec ☒ B $10^{-4} - 10^{-6}$ cm/sec ☐ C $10^{-4} - 10^{-3}$ cm/sec ☐ D GREATER THAN 10^{-3} cm/sec

Clay-sand+gravel

02 PERMEABILITY OF BEDROCK (Check one)

☐ A IMPERMEABLE (Less than 10^{-6} cm/sec) ☒ B RELATIVELY IMPERMEABLE ($10^{-4} - 10^{-6}$ cm/sec) ☐ C RELATIVELY PERMEABLE ($10^{-2} - 10^{-4}$ cm/sec) ☐ D VERY PERMEABLE (Greater than 10^{-2} cm/sec)

Silurian-Niagran dolomite

03 DEPTH TO BEDROCK	04 DEPTH OF CONTAMINATED SOIL ZONE	05 SOIL pH
11-50 (ft)	unknown (ft)	unknown

06 NET PRECIPITATION	07 ONE YEAR 24 HOUR RAINFALL	08 SLOPE: SITE SLOPE	DIRECTION OF SITE SLOPE	TERRAIN AVERAGE SLOPE
2-2.5 (in)	2.5 (in.)	0-30 %	VARIABLE	0-2 %

09 FLOOD POTENTIAL

SITE IS IN unknown YEAR FLOODPLAIN

10 N/A ☐ SITE IS ON BARRIER ISLAND, COASTAL HIGH HAZARD AREA, RIVERINE FLOODWAY

11 DISTANCE TO WETLANDS (5 acre minimum)

ESTUARINE N/A A. _____ (mi) OTHER B. _____ (mi)

12 DISTANCE TO CRITICAL HABITAT (of endangered species)

_____ (mi)

ENDANGERED SPECIES N/A

13 LAND USE IN VICINITY

DISTANCE TO

COMMERCIAL/INDUSTRIAL	RESIDENTIAL AREAS, NATIONAL/STATE PARKS, FORESTS, OR WILDLIFE RESERVES	AGRICULTURAL LANDS: PRIME AG LAND	AGRICULTURAL LANDS: AG LAND
A. 1 (mi)	B. < 1/4 (mi)	C. N/A (mi)	D. _____ (mi)

14 DESCRIPTION OF SITE IN RELATION TO SURROUNDING TOPOGRAPHY

Area relatively flat with slight overall slope to the east

Tollway embankment to the west., Surface drainage collects in ditches along 22nd St, 31st St, and the tollway and may eventually reach Salt Creek which flows near south of the site and far east of the site

VII. SOURCES OF INFORMATION (Cite specific references, e.g., state files, sample analysis, reports)

7.5 topographic map Hinsdale IL, Elmhurst IL, Berwyn IL, River Forest IL
HRS Manual
Soil Investigation Report and Hydrogeologic report by W.H. Flood + Co Inc.

EPA

POTENTIAL HAZARDOUS WASTE SITE
SITE INSPECTION REPORT
PART 6 - SAMPLE AND FIELD INFORMATION

I. IDENTIFICATION	
01 STATE	02 SITE NUMBER
IL	D006 06 467

II. SAMPLES TAKEN

SAMPLE TYPE	01 NUMBER OF SAMPLES TAKEN	02 SAMPLES SENT TO	03 ESTIMATED DATE RESULTS AVAILABLE
GROUNDWATER	1	Organic - Pidco Inorganic - Wilson	1-85
SURFACE WATER			
WASTE			
AIR			
RUNOFF			
SPILL			
SOIL			
VEGETATION			
OTHER			

III. FIELD MEASUREMENTS TAKEN

01 TYPE	02 COMMENTS
	Well G-103 Conductivity 1850 micromhos
	temperature 45°F
	pH 6.7

IV. PHOTOGRAPHS AND MAPS

01 TYPE ☐ GROUND ☐ AERIAL NONE

02 IN CUSTODY OF _____ (Name of organization or individual)

03 MAPS ☒ YES ☐ NO

04 LOCATION OF MAPS Ecology & Environment Inc, Site sketch from Eldredge Engineering Associates

V. OTHER FIELD DATA COLLECTED (Provide narrative description)

NONE

VI. SOURCES OF INFORMATION (Cite specific references, e.g., state files, sample analysis, reports)

On-site inspection
Site sketch with well locations and well G-103 field measurements by Eldredge Engineering Associates.

EPA FORM 2070-13 (7-81)

EPA

POTENTIAL HAZARDOUS WASTE SITE
SITE INSPECTION REPORT
PART 7 - OWNER INFORMATION

I. IDENTIFICATION	
01 STATE	02 SITE NUMBER
IL	DUD-06 VG 7

II. CURRENT OWNER(S)

01 NAME	02 D+B NUMBER	03 STREET ADDRESS (P.O. Box, RFD #, etc.)	04 SIC CODE	05 CITY	06 STATE	07 ZIP CODE
Catholic Cemeteries		1400 Wolf Road		Hillside	IL	60162
Archdiocese of Chicago		155 E. Superior		Chicago	IL	60611

PARENT COMPANY (If applicable)

08 NAME	09 D+B NUMBER	10 STREET ADDRESS (P.O. Box, RFD #, etc.)	11 SIC CODE	12 CITY	13 STATE	14 ZIP CODE

III. PREVIOUS OWNER(S) (List most recent first)

01 NAME	02 D+B NUMBER	03 STREET ADDRESS (P.O. Box, RFD #, etc.)	04 SIC CODE	05 CITY	06 STATE	07 ZIP CODE

IV. REALTY OWNER(S) (If applicable, list most recent first)

01 NAME	02 D+B NUMBER	03 STREET ADDRESS (P.O. Box, RFD #, etc.)	04 SIC CODE	05 CITY	06 STATE	07 ZIP CODE

V. SOURCES OF INFORMATION (Cite specific references, e.g., state files, sample analysis, reports)

IEPA DLPC files Maywood
on-site inspection with interview with Sexton representatives

EPA FORM 2070-13 (7-81)

EPA

POTENTIAL HAZARDOUS WASTE SITE
SITE INSPECTION REPORT
PART 8 - OPERATOR INFORMATION

I. IDENTIFICATION	
01 STATE	02 SITE NUMBER
IL	D006064647

II. CURRENT OPERATOR (Provide if different from owner)

01 NAME	02 D+B NUMBER
John Sexton Contractors	

03 STREET ADDRESS (P.O. Box, RFD #, etc.)	04 SIC CODE
1815 S Wolf Rd	

05 CITY	06 STATE	07 ZIP CODE
Hillside		

08 YEARS OF OPERATION	09 NAME OF OWNER
1959 - present until 9/30/88	Catholic Archdiocese of Chicago

OPERATOR'S PARENT COMPANY (If applicable)

10 NAME	11 D+B NUMBER

12 STREET ADDRESS (P.O. Box, RFD #, etc.)	13 SIC CODE

14 CITY	15 STATE	16 ZIP CODE

III. PREVIOUS OPERATOR(S) (List most recent first; provide only if different from owner)

01 NAME	02 D+B NUMBER

03 STREET ADDRESS (P.O. Box, RFD #, etc.)	04 SIC CODE

05 CITY	06 STATE	07 ZIP CODE

08 YEARS OF OPERATION	09 NAME OF OWNER DURING THIS PERIOD

PREVIOUS OPERATORS' PARENT COMPANIES (If applicable)

10 NAME	11 D+B NUMBER

12 STREET ADDRESS (P.O. Box, RFD #, etc.)	13 SIC CODE

14 CITY	15 STATE	16 ZIP CODE

01 NAME	02 D+B NUMBER

03 STREET ADDRESS (P.O. Box, RFD #, etc.)	04 SIC CODE

05 CITY	06 STATE	07 ZIP CODE

08 YEARS OF OPERATION	09 NAME OF OWNER DURING THIS PERIOD

10 NAME	11 D+B NUMBER

12 STREET ADDRESS (P.O. Box, RFD #, etc.)	13 SIC CODE

14 CITY	15 STATE	16 ZIP CODE

01 NAME	02 D+B NUMBER

03 STREET ADDRESS (P.O. Box, RFD #, etc.)	04 SIC CODE

05 CITY	06 STATE	07 ZIP CODE

08 YEARS OF OPERATION	09 NAME OF OWNER DURING THIS PERIOD

10 NAME	11 D+B NUMBER

12 STREET ADDRESS (P.O. Box, RFD #, etc.)	13 SIC CODE

14 CITY	15 STATE	16 ZIP CODE

IV. SOURCES OF INFORMATION (Cite specific references, e.g. state files, sample analysis, reports)

IEPA DLPC Maywood files
on-site inspection with interview with Sexton representatives

EPA FORM 2070-13 (7-81)

EPA

POTENTIAL HAZARDOUS WASTE SITE
SITE INSPECTION REPORT
PART 9 - GENERATOR/TRANSPORTER INFORMATION

I. IDENTIFICATION	
01 STATE	02 SITE NUMBER
1-	D006006467

II. ON-SITE GENERATOR

01 NAME	02 D+B NUMBER
03 STREET ADDRESS (P.O. Box, RFD #, etc.)	04 SIC CODE
05 CITY	06 STATE / 07 ZIP CODE

III. OFF-SITE GENERATOR(S)

01 NAME	02 D+B NUMBER	01 NAME	02 D+B NUMBER
Numerous - see below			
03 STREET ADDRESS (P.O. Box, RFD #, etc.)	04 SIC CODE	03 STREET ADDRESS (P.O. Box, RFD #, etc.)	04 SIC CODE
05 CITY	06 STATE / 07 ZIP CODE	05 CITY	06 STATE / 07 ZIP CODE
01 NAME	02 D+B NUMBER	01 NAME	02 D+B NUMBER
03 STREET ADDRESS (P.O. Box, RFD #, etc.)	04 SIC CODE	03 STREET ADDRESS (P.O. Box, RFD #, etc.)	04 SIC CODE
05 CITY	06 STATE / 07 ZIP CODE	05 CITY	06 STATE / 07 ZIP CODE

IV. TRANSPORTER(S)

01 NAME	02 D+B NUMBER	01 NAME	02 D+B NUMBER
Numerous			
03 STREET ADDRESS (P.O. Box, RFD #, etc.)	04 SIC CODE	03 STREET ADDRESS (P.O. Box, RFD #, etc.)	04 SIC CODE
05 CITY	06 STATE / 07 ZIP CODE	05 CITY	06 STATE / 07 ZIP CODE
01 NAME	02 D+B NUMBER	01 NAME	02 D+B NUMBER
03 STREET ADDRESS (P.O. Box, RFD #, etc.)	04 SIC CODE	03 STREET ADDRESS (P.O. Box, RFD #, etc.)	04 SIC CODE
05 CITY	06 STATE / 07 ZIP CODE	05 CITY	06 STATE / 07 ZIP CODE

V. SOURCES OF INFORMATION (Cite specific references, e.g., state files, sample analysis, reports)

off-site generators - numerous neighboring contaminators and businesses and industries

on-site inspection interview with Sexton representatives

EPA FORM 2070-13 (7-81)

EPA

POTENTIAL HAZARDOUS WASTE SITE
SITE INSPECTION REPORT
PART 10 - PAST RESPONSE ACTIVITIES

I. IDENTIFICATION	
01 STATE	02 SITE NUMBER
IL	D006066467

II. PAST RESPONSE ACTIVITIES NONE

01 ☐ A. WATER SUPPLY CLOSED — 02 DATE _____ — 03 AGENCY _____
04 DESCRIPTION

01 ☐ B. TEMPORARY WATER SUPPLY PROVIDED — 02 DATE _____ — 03 AGENCY _____
04 DESCRIPTION

01 ☐ C. PERMANENT WATER SUPPLY PROVIDED — 02 DATE _____ — 03 AGENCY _____
04 DESCRIPTION

01 ☐ D. SPILLED MATERIAL REMOVED — 02 DATE _____ — 03 AGENCY _____
04 DESCRIPTION

01 ☐ E. CONTAMINATED SOIL REMOVED — 02 DATE _____ — 03 AGENCY _____
04 DESCRIPTION

01 ☐ F. WASTE REPACKAGED — 02 DATE _____ — 03 AGENCY _____
04 DESCRIPTION

01 ☐ G. WASTE DISPOSED ELSEWHERE — 02 DATE _____ — 03 AGENCY _____
04 DESCRIPTION

01 ☐ H. ON SITE BURIAL — 02 DATE _____ — 03 AGENCY _____
04 DESCRIPTION

01 ☐ I. IN SITU CHEMICAL TREATMENT — 02 DATE _____ — 03 AGENCY _____
04 DESCRIPTION

01 ☐ J. IN SITU BIOLOGICAL TREATMENT — 02 DATE _____ — 03 AGENCY _____
04 DESCRIPTION

01 ☐ K. IN SITU PHYSICAL TREATMENT — 02 DATE _____ — 03 AGENCY _____
04 DESCRIPTION

01 ☐ L. ENCAPSULATION — 02 DATE _____ — 03 AGENCY _____
04 DESCRIPTION

01 ☐ M. EMERGENCY WASTE TREATMENT — 02 DATE _____ — 03 AGENCY _____
04 DESCRIPTION

01 ☐ N. CUTOFF WALLS — 02 DATE _____ — 03 AGENCY _____
04 DESCRIPTION

01 ☐ O. EMERGENCY DIKING/SURFACE WATER DIVERSION — 02 DATE _____ — 03 AGENCY _____
04 DESCRIPTION

01 ☐ P. CUTOFF TRENCHES/SUMP — 02 DATE _____ — 03 AGENCY _____
04 DESCRIPTION

01 ☐ Q. SUBSURFACE CUTOFF WALL — 02 DATE _____ — 03 AGENCY _____
04 DESCRIPTION

EPA

POTENTIAL HAZARDOUS WASTE SITE
SITE INSPECTION REPORT
PART 10 - PAST RESPONSE ACTIVITIES

I. IDENTIFICATION	
01 STATE	02 SITE NUMBER
IL	D006064467

II. PAST RESPONSE ACTIVITIES (Continued)

01 ☐ R. BARRIER WALLS CONSTRUCTED — 02 DATE _____ — 03 AGENCY _____
04 DESCRIPTION

01 ☐ S. CAPPING/COVERING — 02 DATE _____ — 03 AGENCY _____
04 DESCRIPTION

01 ☐ T. BULK TANKAGE REPAIRED — 02 DATE _____ — 03 AGENCY _____
04 DESCRIPTION

01 ☐ U. GROUT CURTAIN CONSTRUCTED — 02 DATE _____ — 03 AGENCY _____
04 DESCRIPTION

01 ☐ V. BOTTOM SEALED — 02 DATE _____ — 03 AGENCY _____
04 DESCRIPTION

01 ☐ W. GAS CONTROL — 02 DATE _____ — 03 AGENCY _____
04 DESCRIPTION

01 ☒ X. FIRE CONTROL — 02 DATE _____ — 03 AGENCY NONE
04 DESCRIPTION
Methane vents installed

01 ☐ Y. LEACHATE TREATMENT — 02 DATE _____ — 03 AGENCY _____
04 DESCRIPTION

01 ☐ Z. AREA EVACUATED — 02 DATE _____ — 03 AGENCY _____
04 DESCRIPTION

01 ☐ 1. ACCESS TO SITE RESTRICTED — 02 DATE _____ — 03 AGENCY _____
04 DESCRIPTION

01 ☐ 2. POPULATION RELOCATED — 02 DATE _____ — 03 AGENCY _____
04 DESCRIPTION

01 ☐ 3. OTHER REMEDIAL ACTIVITIES — 02 DATE _____ — 03 AGENCY _____
04 DESCRIPTION

III. SOURCES OF INFORMATION (Cite specific references, e.g., state files, sample analysis, reports)

IEPA files, DLPC Maywood
On-site interview with Sexton representative

EPA FORM 2070-13 (7-81)

EPA

POTENTIAL HAZARDOUS WASTE SITE
SITE INSPECTION REPORT
PART 11 - ENFORCEMENT INFORMATION

I. IDENTIFICATION	
01 STATE	02 SITE NUMBER
IL	D006066767

II. ENFORCEMENT INFORMATION

01 PAST REGULATORY/ENFORCEMENT ACTION ☐ YES ☒ NO

02 DESCRIPTION OF FEDERAL, STATE, LOCAL REGULATORY/ENFORCEMENT ACTION

III. SOURCES OF INFORMATION (Cite specific references, e.g., state files, sample analysis, reports)

IEPA DLPC files Maywood

EPA FORM 2070-13 (7-81)

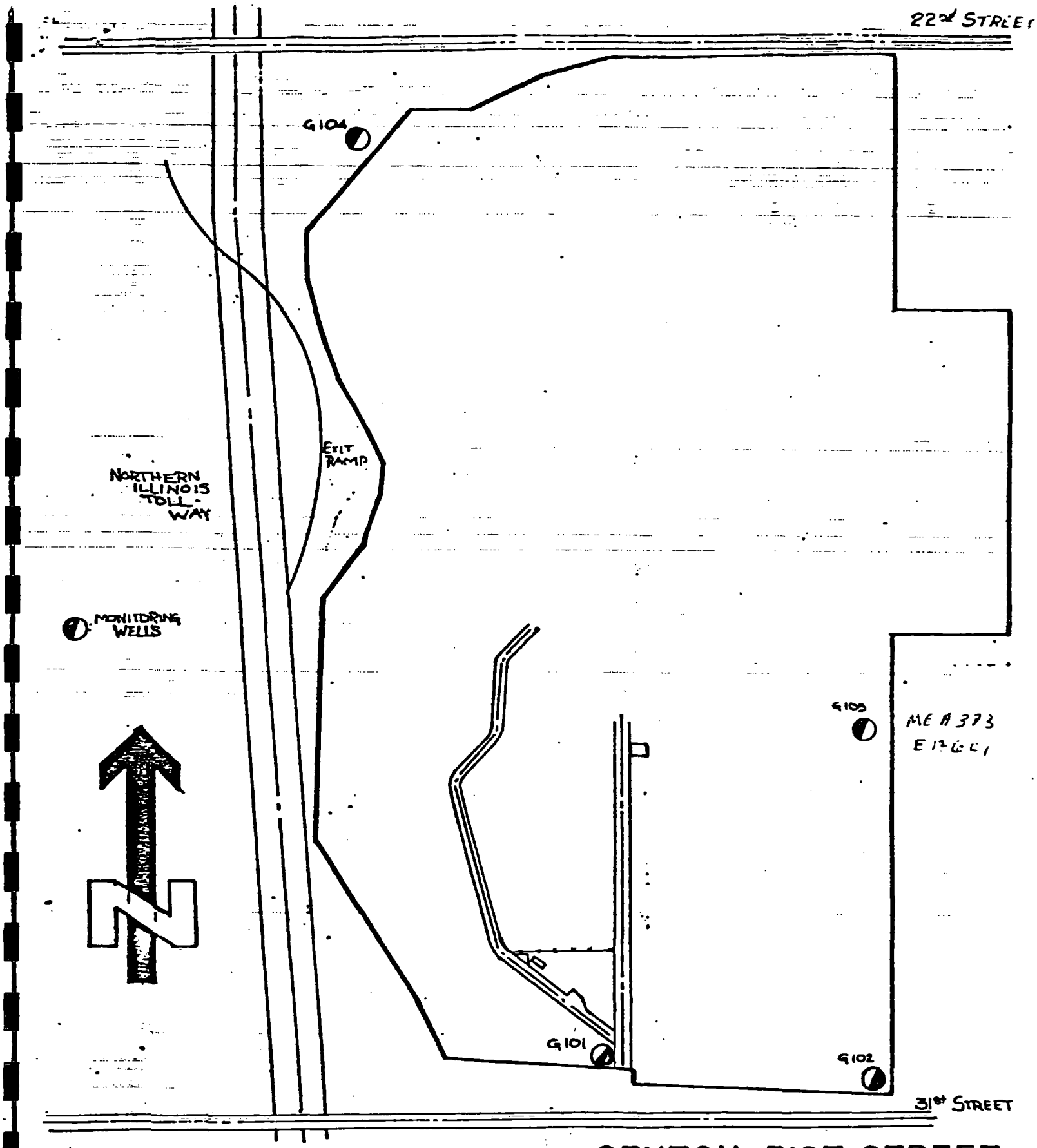

SEXTON–31ST STREET

600' 0' 600'

7/20/78
AS SHOWN

EXHIBIT B

EXHIBIT B

HRS Scoring Package and Documentation Records
(By Ecology and Environment)

Facility name: HINSDALE SEXTON LANDFILL

Location: 11700 W. 31ST ST. HINSDALE, IL. 60521

EPA Region: 5

Person(s) in charge of the facility:	OWNER:	OPERATOR:
	CATHOLIC BISHOP OF CHICAGO	JOHN SEXTON SAND + GRAVEL
	155 E. SUPERIOR	1815 S. WOLF RD
	CHICAGO, IL. 60611	HILLSIDE, IL. 60162

Name of Reviewer: R.K. MCKINLEY, FIT Date: 6-26-85

General description of the facility:

(For example: landfill, surface impoundment, pile, container; types of hazardous substances; location of the facility; contamination route of major concern; types of information needed for rating; agency action, etc.)

HINSDALE SEXTON LANDFILL IS A 275 ACRE SANITARY LANDFILL WHICH HAS BEEN IN OPERATION SINCE 1959 TO PRESENT. TYPES OF WASTE ACCEPTED ARE MIXED MUNICIPAL, COMMERCIAL, INDUSTRIAL AND CONSTRUCTION DEBRIS. THE LANDFILL ALSO ACCEPTS WASTE WATER TREATMENT SLUDGE AND SPECIAL WASTE AS PERMITTED BY THE ILLINOIS EPA. DUE TO THE LACK OF A LINER OR CONTAINMENT SYSTEM AND THE EXISTANCE OF (BELOW)

Scores: S_M = 28.16 S_{gw} = 48.72 S_{sw} = 0 S_a = 0)

S_{FE} = NA

S_{DC} = 0

FIGURE 1
HRS COVER SHEET

A TARGET POPULATION, THE GROUNDWATER ROUTE IS EMPHASIZED IN THIS SCORING PACKAGE. THE DIRECT CONTACT AND SURFACE WATER ROUTES DID NOT SCORE DUE TO CONTAINMENT FACTORS ASSOCIATED WITH THESE PATHWAYS AS NOTED IN SITE FILES. NO OBSERVED RELEASE TO AIR HAS BEEN DOCUMENTED.

Ground Water Route Work Sheet					
Rating Factor	Assigned Value (Circle One)	Multi-plier	Score	Max. Score	Ref. (Section)
1 Observed Release	0 45	1	0	45	3.1
If observed release is given a score of 45, proceed to line 4. If observed release is given a score of 0, proceed to line 2.					
2 Route Characteristics					3.2
Depth to Aquifer of Concern	0 1 2 3	2	6	6	
Net Precipitation	0 1 2 3	1	1	3	
Permeability of the Unsaturated Zone	0 1 2 3	1	1	3	
Physical State	0 1 2 3	1	2	3	
Total Route Characteristics Score			10	15	
3 Containment	0 1 2 3	1	3	3	3.3
4 Waste Characteristics					3.4
Toxicity/Persistence	0 3 6 9 12 15 18	1	18	18	
Hazardous Waste Quantity	0 1 2 3 4 5 6 7 8	1	1	8	
Total Waste Characteristics Score			19	26	
5 Targets					3.5
Ground Water Use	0 1 2 3	3	9	9	
Distance to Nearest Well/Population Served	0 4 6 8 10 / 12 16 18 20 / 24 30 32 35 40	1	40	40	
Total Targets Score			49	49	
6 If line 1 is 45, multiply 1 x 4 x 5 / If line 1 is 0, multiply 2 x 3 x 4 x 5			27,930	57,330	
7 Divide line 6 by 57,330 and multiply by 100		S_{gw} = 48.72			

FIGURE 2
GROUND WATER ROUTE WORK SHEET

Surface Water Route Work Sheet					
Rating Factor	Assigned Value (Circle One)	Multi-plier	Score	Max. Score	Ref. (Section)
1 Observed Release	0 45	1		45	4.1
If observed release is given a value of 45, proceed to line 4. If observed release is given a value of 0, proceed to line 2.					
2 Route Characteristics					4.2
Facility Slope and Intervening Terrain	0 1 2 3	1		3	
1-yr. 24-hr. Rainfall	0 1 2 3	1		3	
Distance to Nearest Surface Water	0 1 2 3	2		6	
Physical State	0 1 2 3	1		3	
	Total Route Characteristics Score			15	
3 Containment	0 1 2 3	1	0	3	4.3
4 Waste Characteristics					4.4
Toxicity/Persistence	0 3 6 9 12 15 18	1		18	
Hazardous Waste Quantity	0 1 2 3 4 5 6 7 8	1		8	
	Total Waste Characteristics Score			26	
5 Targets					4.5
Surface Water Use	0 1 2 3	3		9	
Distance to a Sensitive Environment	0 1 2 3	2		6	
Population Served/Distance to Water Intake Downstream	0 4 6 8 10 12 16 18 20 24 30 32 35 40	1		40	
	Total Targets Score			55	
6 If line 1 is 45, multiply 1 x 4 x 5 If line 1 is 0, multiply 2 x 3 x 4 x 5				64,350	
7 Divide line 6 by 64,350 and multiply by 100		S_{sw} = 0			

FIGURE 7
SURFACE WATER ROUTE WORK SHEET

Air Route Work Sheet					
Rating Factor	Assigned Value (Circle One)	Multi-plier	Score	Max. Score	Ref. (Section)
1 Observed Release	0 45	1	0	45	5.1
Date and Location:					
Sampling Protocol:					
If line 1 is 0, the S_a = 0. Enter on line 5. If line 1 is 45, then proceed to line 2.					
2 Waste Characteristics					5.2
Reactivity and Incompatibility	0 1 2 3	1		3	
Toxicity	0 1 2 3	3		9	
Hazardous Waste Quantity	0 1 2 3 4 5 6 7 8	1		8	
	Total Waste Characteristics Score			20	
3 Targets					5.3
Population Within 4-Mile Radius	0 9 12 15 18 21 24 27 30	1		30	
Distance to Sensitive Environment	0 1 2 3	2		6	
Land Use	0 1 2 3	1		3	
	Total Targets Score			39	
4 Multiply 1 x 2 x 3				35,100	
5 Divide line 4 by 35,100 and multiply by 100		S_a = N/A = 0			

FIGURE 9
AIR ROUTE WORK SHEET

Fire and Explosion Work Sheet					
Rating Factor	Assigned Value (Circle One)	Multi-plier	Score	Max. Score	Ref. (Section)
1 Containment	1 3	1		3	7.1
2 Waste Characteristics					7.2
Direct Evidence	0 3	1		3	
Ignitability	0 1 2 3	1		3	
Reactivity	0 1 2 3	1		3	
Incompatibility	0 1 2 3	1		3	
Hazardous Waste Quantity	0 1 2 3 4 5 6 7 8	1		8	
Total Waste Characteristics Score				20	
3 Targets					7.3
Distance to Nearest Population	0 1 2 3 4 5	1		5	
Distance to Nearest Building	0 1 2 3	1		3	
Distance to Sensitive Environment	0 1 2 3	1		3	
Land Use	0 1 2 3	1		3	
Population Within 2-Mile Radius	0 1 2 3 4 5	1		5	
Buildings Within 2-Mile Radius	0 1 2 3 4 5	1		5	
Total Targets Score				24	
4 Multiply 1 x 2 x 3				1,440	
5 Divide line 4 by 1,440 and multiply by 100			S_{FE} = N/A = 0		

FIGURE 11
FIRE AND EXPLOSION WORK SHEET

Direct Contact Work Sheet					
Rating Factor	Assigned Value (Circle One)	Multi-plier	Score	Max. Score	Ref. (Section)
1 Observed Incident	0 45	1		45	8.1
If line 1 is 45, proceed to line 4 If line 1 is 0, proceed to line 2					
2 Accessibility	0 1 2 3	1		3	8.2
3 Containment	0 15	1	0	15	8.3
4 Waste Characteristics Toxicity	0 1 2 3	5		15	8.4
5 Targets					8.5
Population Within a 1-Mile Radius	0 1 2 3 4 5	4		20	
Distance to a Critical Habitat	0 1 2 3	4		12	
Total Targets Score				32	
6 If line 1 is 45, multiply 1 x 4 x 5 If line 1 is 0, multiply 2 x 3 x 4 x 5				21,600	
7 Divide line 6 by 21,500 and multiply by 100		S_{DC} =	0		

FIGURE 12
DIRECT CONTACT WORK SHEET

	S	S^2
Groundwater Route Score (S_{gw})	48.72	2373.64
Surface Water Route Score (S_{sw})	0	0
Air Route Score (S_a)	0	0
$S_{gw}^2 + S_{sw}^2 + S_a^2$		2373.64
$\sqrt{S_{gw}^2 + S_{sw}^2 + S_a^2}$		48.72
$\sqrt{S_{gw}^2 + S_{sw}^2 + S_a^2} / 1.73 = S_M =$		28.16

FIGURE 10
WORKSHEET FOR COMPUTING S_M

DOCUMENTATION RECORDS
FOR
HAZARD RANKING SYSTEM

INSTRUCTIONS: The purpose of these records is to provide a convenient way to prepare an auditable record of the data and documentation used to apply the Hazard Ranking System to a given facility. As briefly as possible summarize the information you used to assign the score for each factor (e.g., "Waste quantity - 4,230 drums plus 800 cubic yards of sludges"). The source of information should be provided for each entry and should be a bibliographic-type reference that will make the document used for a given data point easier to find. Include the location of the document and consider appending a copy of the relevant page(s) for ease in review.

FACILITY NAME: HINSDALE SEXTON LANDFILL

LOCATION: 11700 W. 31ST ST. HINSDALE, IL. 60521

1 OBSERVED RELEASE

Contaminants detected (5 maximum):

NONE DOCUMENTED

Rationale for attributing the contaminants to the facility:

N/A

* * *

2 ROUTE CHARACTERISTICS

Depth to Aquifer of Concern = 6.5'

Name/description of aquifers(s) of concern: QUATERNARY CRETACEOUS TERTIARY
HYDROSTRATIGRAPHICALLY CONNECTED PENNSYVANIAN CHESTERIAN
(REF. # 1 pg. 13, REF. # 7 pg. 14) VALMEYERAN SILURIAN-DEVONIAN
GROUNDWATER WITHDRAWALS FROM GALENA-PLATTEVILLE
AQUAFERS IN ILLINOIS WITH EMPHASIS GLENWOOD-ST. PETER
ON PWS WELLS EMINENCE-POTOSI
(REF. # 1 pg. 6) IRONTON-GALESVILLE

Depth(s) from the ground surface to the highest seasonal level of the saturated zone [water table(s)] of the aquifer of concern:

TOP OF PIPE ABOVE GRADE = 3.0'
WATER LEVEL FROM TOP OF PIPE = 15.5' } 12.5' (REF. #2 pg. 1)
* USED WELL # 3 (G-103) → SATURATED
OTHER MONITORING WELLS PERIODICALLY DRY.

Depth from the ground surface to the lowest point of waste disposal/storage:

LOWEST POINT OF WASTE DISPOSAL/STORAGE IS UNKNOWN

ASSUME 6' TOTAL WASTE DEPTH

12.5' − 6' = 6.5'

(REF #3: 47 FR 31224)

Net Precipitation

Mean annual or seasonal precipitation (list months for seasonal): 32"
(REF #3 - 47FR312

Mean annual lake or seasonal evaporation (list months for seasonal): 30"
(REF. # 3-47FR31224)

Net precipitation (subtract the above figures): 2"

Permeability of Unsaturated Zone

Soil type in unsaturated zone: CLAY TILLS
(REF. #4 pg 1)
(REF # 6 pg. 4)

Permeability associated with soil type: 10^{-5} TO 10^{-7} Cm/SEC
(REF. # 3-47FR31224)

Physical State

Physical state of substances at time of disposal (or at present time for generated gases): POWDER
(REF. # 5 pg. 5)

* * *

3 CONTAINMENT

Containment

Method(s) of waste or leachate containment evaluated:
SITE IS UNDERLAIN BY VARYING THICKNESSES OF NATURAL CLAY THAT HAS NOT BEEN RE-WORKED. NO MAN-MADE LINER, BARRIER OR CONTAINMENT SYSTEM EXISTS. (REF # 4 pg. 1) (REF. # 6 PART 4)

Method with highest score:
NO CONTAINMENT SYSTEM EXISTS.

4 WASTE CHARACTERISTICS

Toxicity and Persistence

Compound(s) evaluated: CALCIUM OXIDE; MINOR AMOUNTS OF LEAD, TITANIUM, MANGANESE, NICKEL, COPPER, ZINC, ALUMINUM AND SILICON.

LEAD : TOXICITY = 3 (REF # 8, P1688-1689)
PERSISTENCE = 3 (REF # 9-49FR 31229)

Compound with highest score:
LEAD

Hazardous Waste Quantity

Total quantity of hazardous substances at the facility, excluding those with a containment score of 0 (Give a reasonable estimate even if quantity is above maximum): 4-5 yd.^{3} CALCIUM OXIDE (REF # 5 pg. 5)

Basis of estimating and/or computing waste quantity: CORRESPONDENCE DATED SEPT. 15, 1980 (REF. #5 Pg 5)

* * *

5 TARGETS

Ground Water Use

Use(s) of aquifer(s) of concern within a 3-mile radius of the facility:
DRINKING, WITH NO ALTERNATE SOURCE A MINIMAL HOOKUP COSTS. POPULATION SERVED WITHIN 3 MILES ARE ALL SUPPLIED WITH EITHER PRIVATE OR MUNICIPAL WELLS. (REF # 1 pg 69, 71, 92, 94, 95) (REF # 8 PART 5)

Distance to Nearest Well

Location of nearest well drawing from aquifer of concern or occupied building not served by a public water supply: CITY OF OAKBROOK - WELL # 5 2011 WINDSOR RD., NORTH OF 22ND ST. AND EAST OF YORK RD. AND WEST OF I-295 NEAR THE I-5 EXIT. (SECTION 25, R11E, T39N)

(REF # 10) (WELL DEPTH ~1500'
(REF # 12)

Distance to above well or building:

< 2000 FEET
(REF. # 10)
(REF # 12)

Population Served by Ground Water Wells Within a 3-Mile Radius

Identified water-supply well(s) drawing from aquifer(s) of concern within a 3-mile radius and populations served by each:
AQUIFERS STATED ARE HYDROSTRATIGRAPHICALLY CONNECTED:

(REF # 10) OAKBROOK - 4 WELLS - POP. SERVED: 13,000-14,000
(REF # 1 pg. 13) WESTERN SPRINGS - 2 WELLS - POP. SERVED: 13,029
(REF. 12) (REF # 6 PART 5) HINSDALE - 10 WELLS - POP. SERVED: 15,918
(REF # 7 p 14) HINSDALE DISTRICT - 2 WELLS - POP. SERVED: 660

Computation of land area irrigated by supply well(s) drawing from aquifer(s) of concern within a 3-mile radius, and conversion to population (1.5 people per acre): NONE

Total population served by ground water within a 3-mile radius: 14,000

THE SCORE OBTAINED FROM THE POPULATION SERVED AND THE DISTANCE TO THE NEAREST WELL IS MAXIMIZED WHEN CONSIDERING ONLY THE CITY OF OAKBROOK:

TOTAL POPULATION SERVED: 14,000
DISTANCE TO NEAREST WELL: < 2000 FEET

∴ POPULATION SERVED BY CITY OF OAKBROOK SYSTEM WAS USED TO OBTAIN SCORE

(REF. # 10)
(REF # 12)

SURFACE WATER ROUTE

1 OBSERVED RELEASE

Contaminants detected in surface water at the facility or downhill from it (5 maximum): NONE DOCUMENTED
(SEE CONTAINMENT FACTOR = 0)

Rationale for attributing the contaminants to the facility:

* * *

2 ROUTE CHARACTERISTICS

Facility Slope and Intervening Terrain

Average slope of facility in percent:

Name/description of nearest downslope surface water:

Average slope of terrain between facility and above-cited surface water body in percent:

Is the facility located either totally or partially in surface water?

Is the facility completely surrounded by areas of higher elevation?

1-Year 24-Hour Rainfall in Inches

Distance to Nearest Downslope Surface Water

Physical State of Waste

* * *

3 CONTAINMENT = 0

Containment

Method(s) of waste or leachate containment evaluated:

LANDFILL HAS ADEQUATE COVER — EXCEEDING REQUIRED
(REF # 6 - PART 3) (REF # 11 pg 1) - 24 INCHES
(REF # 4 pg 1) (REF # 13 pg 1)

Method with highest score:

4 WASTE CHARACTERISTICS

Toxicity and Persistence

Compound(s) evaluated:

Compound with highest score:

Hazardous Waste Quantity

Total quantity of hazardous substances at the facility, excluding those with a containment score of 0 (Give a reasonable estimate even if quantity is above maximum):

Basis of estimating and/or computing waste quantity:

* * *

5 TARGETS

Surface Water Use

Use(s) of surface water within 3 miles downstream of the hazardous substance:

Is there tidal influence?

Distance to a Sensitive Environment

Distance to 5-acre (minimum) coastal wetland, if 2 miles or less:

Distance to 5-acre (minimum) fresh-water wetland, if 1 mile or less:

Distance to critical habitat of an endangered species or national wildlife refuge, if 1 mile or less:

Population Served by Surface Water

Location(s) of water-supply intake(s) within 3 miles (free-flowing bodies) or 1 mile (static water bodies) downstream of the hazardous substance and population served by each intake:

Computation of land area irrigated by above-cited intake(s) and conversion to population (1.5 people per acre):

Total population served:

Name/description of nearest of above water bodies:

Distance to above-cited intakes, measured in stream miles.

1 OBSERVED RELEASE

Contaminants detected: NONE DOCUMENTED

Date and location of detection of contaminants

Methods used to detect the contaminants:

Rationale for attributing the contaminants to the site:

* * *

2 WASTE CHARACTERISTICS

Reactivity and Incompatibility

Most reactive compound:

Most incompatible pair of compounds:

Toxicity

Most toxic compound:

Hazardous Waste Quantity

Total quantity of hazardous waste:

Basis of estimating and/or computing waste quantity:

* * *

3 TARGETS

Population Within 4-Mile Radius

Circle radius used, give population, and indicate how determined:

0 to 4 mi 0 to 1 mi 0 to 1/2 mi 0 to 1/4 mi

Distance to a Sensitive Environment

Distance to 5-acre (minimum) coastal wetland, if 2 miles or less:

Distance to 5-acre (minimum) fresh-water wetland, if 1 mile or less:

Distance to critical habitat of an endangered species, if 1 mile or less:

Land Use

Distance to commercial/industrial area, if 1 mile or less:

Distance to national or state park, forest, or wildlife reserve, if 2 miles or less:

Distance to residential area, if 2 miles or less:

Distance to agricultural land in production within past 5 years, if 1 mile or less:

Distance to prime agricultural land in production within past 5 years, if 2 miles or less:

Is a historic or landmark site (National Register or Historic Places and National Natural Landmarks) within the view of the site?

1 CONTAINMENT

Hazardous substances present:

Type of containment, if applicable:

* * *

2 WASTE CHARACTERISTICS

Direct Evidence

Type of instrument and measurements:

Ignitability

Compound used:

Reactivity

Most reactive compound:

Incompatibility

Most incompatible pair of compounds:

* * *

Hazardous Waste Quantity

Total quantity of hazardous substances at the facility:

Basis of estimating and/or computing waste quantity:

* * *

3 TARGETS

Distance to Nearest Population

Distance to Nearest Building

Distance to Sensitive Environment

Distance to wetlands:

Distance to critical habitat:

Land Use

Distance to commercial/industrial area, if 1 mile or less:

Distance to national or state park, forest, or wildlife reserve, if 2 miles or less:

Distance to residential area, if 2 miles or less:

Distance to agricultural land in production within past 5 years, if 1 mile or less:

Distance to prime agricultural land in production within past 5 years, if 2 miles or less:

Is a historic or landmark site (National Register or Historic Places and National Natural Landmarks) within the view of the site?

Population Within 2-Mile Radius

Buildings Within 2-Mile Radius

1 OBSERVED INCIDENT

Date, location, and pertinent details of incident:

* * *

2 ACCESSIBILITY

Describe type of barrier(s):

* * *

3 CONTAINMENT = 0

Type of containment, if applicable:

LANDFILL HAS ADEQUATE COVER - EXCEEDING REQUIRED 24 INCHES (REF. #13 pg. 1)

* * *

4 WASTE CHARACTERISTICS

Toxicity

Compounds evaluated:

Compound with highest score:

* * *

Population within one-mile radius

Distance to critical habitat (of endangered species)

HRS DOCUMENTATION LOG SHEET

SITE NAME HINSDALE SEXTON LANDFILL
CITY HINSDALE STATE IL
IDENTIFICATION NUMBER D006064467

REFERENCE NUMBER	DESCRIPTION OF THE REFERENCE
1	GROUND WITHDRAWALS FROM AQUIFERS IN ILLINOIS WITH
	EMPHASIS ON PWS WELLS. PISKIN, STUDENT, WITHERS
	+ DICKMAN. 1981. ILLINOIS EPA (pg. 6, 13, 69, 71, 92, 94, 95)
2	WELL INSTALLATION DATA: TO - JOHN SEXTON SAND + GRAVEL
	FROM - WALTER H. FLOOD + CO. SEPT. 3, 1974
3	FEDERAL REGISTER (47 FR 31224, JULY 16, 1982)
4	SOIL INVESTIGATION # 7205-0010 - SOLID WASTE DISPOSAL
	SITE - 31ST ST. + WOLF RD. WESTCHESTER, IL.
	WALTER H. FLOOD CO., INC. AUG. 3, 1972 (pg. 1-5)
5	ILLINOIS EPA LAB REPORT - COLLECTED: 9-9-80
	ANALYZED: 9-10-80 REPORT DATE: 10-3-80
	LAB # 1315-1317
6	SITE INSPECTION REPORT - 10/25/84 + 11/19/84
	PRINCIPLE INSPECTOR: D. COZZA - BIOLOGIST - ETE
	DATE OF REPORT: 2-5-85
7	SUMMARY OF THE GEOLOGY OF THE CHICAGO AREA
	H.B. WILLMAN. 1971. (CONTENTS PAGE, pg. 14)
8	DANGEROUS PROPERTIES OF INDUSTRIAL MATERIALS. SAX.
	1984. (pg 1688-1689).
9	FEDERAL REGISTER (47 FR 31229, JULY 16, 1982)
10	USGS 7.5 TOPO MAP: ELMHURST, IL. 1972;
	BERWYN, IL. 1972; HINSDALE, IL. 1972; RIVER FOREST, IL. 1972

ARS DOCUMENTATION LOG SHEET

SITE NAME HINSDALE SEXTON LANDFILL
CITY HINSDALE STATE IL
IDENTIFICATION NUMBER D006064 67

REFERENCE NUMBER	DESCRIPTION OF THE REFERENCE
11	MEMO: TO: ARTHUR A. DANIELS - JOHN SEXTON CONTRACTORS CO. FROM: ILLINOIS EPA - THOMAS E. CAVANAUGH - MANAGER. LAND PERMIT SECTION - DIV. OF LAND/NOISE POLLUTION CONTROL. MAY 16, 1980. NPDES PERMIT.
12	CONTACT REPORT - TO: HINSDALE SEXTON LANDFILL PROJECT FILE. FROM: R.K. MCKINLEY - E+E, INC. SUBJECT: PHONE CONVERSATION WITH FLOYD WILSON, SUPERINTENDENT OAKBROOK PUBLIC WORKS DEPT. JUNE 12, 1985 - 9:00 AM
13	MEMO: TO: JOHN SEXTON CONTRACTORS CO. FROM: IL. EPA. KENNETH P. BECHELY - NORTHERN REGION MANAGER FIELD OPERATIONS SECTION, DIV. OF LAND POLLUTION CONTROL. NOV. 27, 1984. LANDFILL FINAL COVER.

EXHIBIT C

EXHIBIT C

Well Inventory of Western Cook and Eastern DuPage Counties

EXHIBIT C

Well Inventory of Western Cook and Eastern DuPage Counties, 1987[1]

Well I.D.	Location Specifics T	R	SEC.	Total Depth (ft.)	Indicated Formation	Reported Status	Public (Pu) Private (Pr)	Notes
MW-1	39N	12E	9.4d		S.S.	Operating	Pu	Bellwood Municipal Well #1
MW-2	39N	12E	9.5a	1951	S.S.	Operating	Pu	Bellwood Municipal Well #3
MW-3	39N	12E	9.5f	1954	S.S.	Operating	Pu	Bellwood Municipal Well #2
MW-4	39N	12E	8.5g	1960	S.S.	Operating	Pu	Bellwood Municipal Well #4
MW-5	39N	12E	16.2f	1845	S.S.	Operating	Pu	Bellwood Municipal Well #5
MW-6a	39N	11E	11.8e	875	S.S	Abandoned	Pu	Clarendon Hills Municipal Well #1
MW-6b	39N	11E	11.8e	250	DOL	Stand-by	Pu	Clarendon Hills Municipal Well #2
MW-6c	38N	11E	11.5a	378	DOL	For Water Monitoring Only	Pu	Clarendon Hills Municipal Well #3
MW-7	38N	11E	11.5d	370	DOL	Back-up	Pu	Clarendon Hills Municipal Well #4
MW-8	38N	11E	11.5c	368	DOL	Out of Service 1973	Pu	Clarendon Hills Municipal Well #5
MW-9	38N	11E	11.7a	352	DOL	Stand-by	Pu	Clarendon Hills Municipal Well #6
MW-10	38N	11E	11.5c	1585	S.S.		Pu	Clarendon Hills Municipal Well #7
MW-11	39N	11E	1.8f	1480	S.S.	Not Operating	Pu	Elmhurst Municipal Well #1
MW-12	39N	11E	1.8f	1617	S.S.	Plugged 1963	Pu	Elmhurst Municipal Well #2
MW-13	39N	11E	2.2f	2221	S.S.	Operating	Pu	Elmhurst Municipal Well #3
MW-14	39N	11E	2.2f	1502	S.S.		Pu	Elmhurst Municipal Well #4
MW-15a	39N	11E	12.8e	1480	S.S.		Pu	Elmhurst Municipal Well #5
MW-15b	39N	11E			S.S.	Operating	Pu	Elmhurst Municipal Well #6
MW-16	39N	11E	13.3g	290	DOL	Operating	Pu	Elmhurst Municipal Well #7 (7a)
MW-17	39N	11E	23.5e	90	DOL	Back-up	Pu	Elmhurst Municipal Well #8
MW-18	39N	11E	13.3g	1567	S.S.	Operating	Pu	Elmhurst Municipal Well #10 (7b)
MW-19	40N	11E	1e	1500	S.S.	Operating	Pu	Elmhurst Municipal Well #9
MW-20	38N	11E	1.4a	209	DOL	Not Operating	Pu	Hinsdale Municipal Well #1
MW-21	38N	11E	1.3a	271	DOL	Operating	Pu	Hinsdale Municipal Well #2
MW-22	38N	11E	1.3a	210	DOL	Operating	Pu	Hinsdale Municipal Well #3
MW-23	38N	11E	1.8c	283.5	DOL	Operating	Pu	Hinsdale Municipal Well #4
MW-24	38N	11E	12.8b	319	DOL	Operating	Pu	Hinsdale Municipal Well #5
MW-25	38N	11E	11.1g	307	DOL	Operating	Pu	Hinsdale Municipal Well #6
MW-26	38N	11E	11.3g	353	DOL	Operating	Pu	Hinsdale Municipal Well #7
MW-27	39N	11E	36.1c	347	DOL	Operating	Pu	Hinsdale Municipal Well #8
MW-28	39N	11E	36.2a	320	DOL	Operating	Pu	Hinsdale Municipal Well #9
MW-29	39N	11E	36.4a	287	DOL	Operating	Pu	Hinsdale Municipal Well #10

[1]Illinois Water Survey, 1987.

EXHIBIT C

Well Inventory of Western Cook and Eastern DuPage Counties, 1987[1]

Well I.D.	Location Specifics T	R	SEC.	Total Depth (ft.)	Indicated Formation	Reported Status	Public (Pu) Private (Pr)	Notes
MW-30	38N	12E	4.8d	2005	S.S.	Abandoned	Pu	LaGrange Municipal Well #1
MW-31	38N	12E	4.8d	370	DOL	Abandoned 1965	Pu	LaGrange Municipal Well #2
MW-32	38N	12E	4.2e	1971	S.S.	Abandoned 1945	Pu	LaGrange Municipal Well #4
MW-33	38N	12E	5.3e	352	DOL	Town switched	Pu	LaGrange Municipal Well #6
MW-34	38N	12E	4.8d	1538	S.S.	to Lake MI water 3/84	Pu	Lagrange Municipal Well #8
MW-35	39N	12E	15.2g	2040	S.S.	Abandoned 1969	Pu	Maywood Municipal Well #5
MW-36	39N	12E	15.1g	1570	S.S.	Abandoned	Pu	Maywood Municipal Well #6
MW-37	39N	12E	10.8h	1620	S.S.	Abandoned	Pu	Melrose Park Municipal Well #1
MW-38	39N	12E	10.8h	1571	S.S.	Abandoned	Pu	Melrose Park Municipal Well #2
MW-39	39N	12E	3.8e	1937	S.S.	Abandoned	Pu	Melrose Park Municipal Well #3 City now supplied by lake water
MW-40	39N	11E	26.8f	221	DOL	Back-up	Pu	Oak Brook Municipal Well #1
MW-41	39N	11E	26.8h	1540	S.S.	Operating	Pu	Oak Brook Municipal Well #2
MW-42	39N	11E	26.5h	1452	S.S.	Back-up	Pu	Oak Brook Municipal Well #1 (East)
MW-43	39N	11E	24.3b	252	DOL	Plugged 10/76	Pu	Oak Brook Municipal Well #4
MW-44	39N	11E	24.3b	1503	S.S.	Operating	Pu	Oak Brook Municipal Well #5
MW-45	39N	11E	27.6g	1513	S.S.	Operating	Pu	Oak Brook Municipal Well #7
MW-46	39N	11E	28.7a	Deep	S.S.	Operating	Pu	Oak Brook Municipal Well #6
MW-47	39N	11E	28.1b	Shal.	DOL	Back-up	Pu	Oak Brook Municipal Well #3
MW-48	38N	12E	5.8d	313	DOL	Plugged	Pu	Western Springs Municipal Well #2
MW-49	38N	12E	5.8d	1256	S.S.	Operating	Pu	Western Springs Municipal Well #3
MW-50	38N	12E	6.6b	*1913	S.S.	Operating	Pu	Western Springs Municipal Well #4
MW-51	38N	12E	5.8d	380	DOL	Back-up	Pu	Western Springs Municipal Well #1
W-52	39N	11E	22.1a	125	DOL		Pr	Drilled 1959
W-53	39N	11E	22.6f	107	DOL		Pr	Drilled 1959
W-54	39N	11E	22.2b	131	DOL		Pr	Drilled 1/28/72
W-55	39N	11E	22.5d	115	DOL		Pr	Drilled 1959
W-56	39N	11E	22.7h	130	DOL		Pr	Drilled 1959
W-57	39N	11E	22.5e	120	DOL		Pr	Drilled 1959
W-58	39N	11E	22.6d	115	DOL		Pr	Drilled 1959
W-59	39N	11E	22.8e	138	DOL		Pr	Drilled 1969
W-60	39N	11E	22.2c	130	DOL		Pr	Drilled 1959

*Deepened from 372' to 1913' in 1966

[1]Illinois Water Survey, 1987.

EXHIBIT C

Well Inventory of Western Cook and Eastern DuPage Counties, 1987[1]

Well I.D.	Location Specifics T	R	SEC.	Total Depth (ft.)	Indicated Formation	Reported Status	Public (Pu) Private (Pr)	Notes
W-61	39N	11E	22.4d	129	DOL		Pr	Drilled 1972
W-62	39N	11E	22.6f	130	DOL		Pr	Drilled 1971
W-63	39N	11E	22.5b	130	DOL		Pr	Drilled 1959
W-64	39N	11E	22.4d	130	DOL		Pr	Drilled 1959
W-65	39N	11E	22.4d	120	DOL		Pr	Drilled 1959
W-66	39N	11E	22.3d	130	DOL		Pr	Drilled 1959
W-67	39N	11E	22.5f	110	DOL		Pr	Drilled 1959
W-68	39N	11E	22.3d	111	DOL		Pr	Drilled 1959
W-69	39N	11E	22.5g	135	DOL		Pr	Drilled 1959
W-70	39N	11E	22.3h	800	Deep DOL		Pr	Drilled 1924
W-71	39N	11E	22.6f	110	DOL		Pr	Drilled 1959
W-72	39N	11E	22.6d	101	DOL		Pr	Drilled 1958
W-73	39N	11E	22.3c	126	DOL		Pr	Drilled 1959
W-74	39N	11E	22.2d	100	DOL		Pr	Drilled 1957
W-75	39N	11E	22.5f	113	DOL		Pr	Drilled 1960
W-76	39N	11E	22.6c	116	DOL		Pr	Drilled 1958
W-77	39N	11E	22.1e	120	DOL		Pr	Drilled 1959
W-78	39N	11E	22.4a	130	DOL		Pr	Drilled 1959
W-79	39N	11E	22.1e	120	DOL		Pr	Drilled 1967
W-80	39N	11E	22.1e	130	DOL		Pr	Drilled 1960
W-81	39N	11E	22.7g	139	DOL		Pr	Drilled 4/23/68
W-82	39N	11E	22.4d	102	DOL		Pr	Drilled 5/27/68
W-83	39N	11E	22.2d	112	DOL		Pr	Drilled 7/16/70
W-84	39N	11E	22.3d	102	DOL		Pr	Drilled 4/23/68
W-85	39N	11E	22.3e	130	DOL		Pr	Drilled 3/05/71
W-86	39N	11E	22.7e	270	DOL		Pr	Drilled 6/18/87
W-87	39N	11E	22.2b	120	DOL		Pr	Drilled 6/28/71
W-88	39N	11E	22.1e	130	DOL		Pr	Drilled 7/14/71
W-89	39N	11E	22.7e	140	DOL		Pr	Drilled 2/24/72
W-90	39N	11E	22.2b	150	DOL		Pr	Drilled 2/21/72

[1]Illinois Water Survey, 1987.

EXHIBIT C

Well Inventory of Western Cook and Eastern DuPage Counties, 1987[1]

Well I.D.	Location Specifics T	R	SEC.	Total Depth (ft.)	Indicated Formation	Reported Status	Public (Pu) Private (Pr)	Notes
W-91	39N	11E	22.6c	129	DOL		Pr	Drilled 10/22/73
W-92	39N	11E	22.4c	120	DOL		Pr	Drilled 04/23/75
W-93	39N	11E	22.5g	137	DOL		Pr	Drilled 04/13/73
W-94	39N	11E	22.2c	145	DOL		Pr	Drilled 11/12/74
W-95	39N	11E	22.6b	95	DOL		Pr	Drilled 07/16/73
W-96	39N	11E	22.5d	156	DOL		Pr	Drilled 10/27/73
W-97	39N	11E	22.2b	140	DOL		Pr	Drilled 11/12/73
W-98	39N	11E	22.2b	145	DOL		Pr	Drilled 08/13/73
W-99	39N	11E	22.2b	160	DOL		Pr	Drilled 11/12/73
W-100	39N	11E	22.3f	258	DOL		Pr	Drilled 11/20/73
W-101	39N	11E	22.2b	100	DOL		Pr	Drilled 07/27/74
W-102	39N	11E	22.2f	160	DOL		Pr	Drilled 02/07/74
W-103	39N	11E	22.7f	350	DOL		Pr	Drilled 12/13/74
W-104	39N	11E	22.3c	160	DOL		Pr	Drilled 02/04/74
W-105	39N	11E	22.3b	220	DOL		Pr	Drilled 10/10/75
W-106	39N	11E	22.2b	120	DOL		Pr	Drilled 02/21/75
W-107	39N	11E	22.7b	120	DOL		Pr	Drilled 10/30/75
W-108	39N	11E	22.7f	140	DOL		Pr	Drilled 10/27/75
W-109	39N	11E	22.2e	120	DOL		Pr	Drilled 12/31/75
W-110	39N	11E	22.7b	120	DOL		Pr	Drilled 10/30/75
W-111	39N	11E	22.2e	120	DOL		Pr	Drilled 07/27/76
W-112	39N	11E	22.1e	130	DOL		Pr	Drilled 08/12/76
W-113	39N	11E	22.4d	120	DOL		Pr	Drilled 12/11/78
W-114	39N	11E	22.5b	160	DOL		Pr	Drilled 06/12/76
W-115	39N	11E	22.2b	120	DOL		Pr	Drilled 10/08/77
W-116	39N	11E	22.2c	120	DOL		Pr	Drilled 11/16/78
W-117	39N	11E	22.2b	115	DOL		Pr	Drilled 10/31/77
W-118	39N	11E	22.2b	100	DOL		Pr	Drilled 02/28/78
W-119	39N	11E	22.2b	100	DOL		Pr	Drilled 06/20/77
W-120	39N	11E	22.2b	100	DOL		Pr	Drilled 09/09/78
W-121	39N	11E	22.3e	140	DOL		Pr	Drilled 07/22/76
W-122	39N	11E	22.2b	220	DOL		Pr	Drilled 06/20/77

[1]Illinois Water Survey, 1987.

EXHIBIT C

Well Inventory of Western Cook and Eastern DuPage Counties, 1987[1]

Well I.D.	Location Specifics T	R	SEC.	Total Depth (ft.)	Indicated Formation	Reported Status	Public (Pu) Private (Pr)	Notes
W-123	39N	11E	22.4b	160	DOL		Pr	Drilled 07/03/75
W-124	39N	11E	22.2b	100	DOL		Pr	Drilled 06/28/78
W-125	39N	11E	22.2b	155	DOL		Pr	Drilled 08/22/78
W-126	39N	11E	22.4c	155	DOL		Pr	Drilled 08/25/77
W-127	39N	11E	22.8c	230	DOL		Pr	Drilled 08/15/85
W-128	39N	11E	22.8b	305	DOL		Pr	Well tip in shale
W-129	39N	11E	22.7b	101	DOL		Pr	Well tip in shale
W-130	39N	11E	22.7b	352	DOL		Pr	Well tip in shale
W-131	39N	11E	22.2b	120	DOL		Pr	Drilled 03/20/86
W-132	39N	11E	22.2b	100	DOL		Pr	Drilled 10/11/77
W-133	39N	11E	22.2f	145	DOL		Pr	Drilled 09/02/83
W-134	39N	11E	22.8b	100	DOL		Pr	Drilled 06/03/77
W-135	39N	11E	22.8b	150	DOL		Pr	Drilled 04/15/77
W-136	39N	11E	22.4a	160	DOL		Pr	Drilled 12/03/74
W-137	39N	11E	22.5a	100	DOL		Pr	Drilled 06/13/78
W-138	39N	11E	22.8b	150	DOL		Pr	Drilled 04/15/77
W-139	39N	11E	22.6a	130	DOL		Pr	Drilled 10/13/76
W-140	39N	11E	22.4a	120	DOL		Pr	Drilled 02/17/78
W-141	39N	11E	22.4d	130	DOL		Pr	Drilled 07/10/81
W-142	39N	11E	22.1a	100	DOL		Pr	Drilled 01/20/77
W-143	39N	11E	22.2b	140	DOL		Pr	Drilled 07/06/82
W-144	39N	11E	14.8e	100	DOL		Pr	Drilled 12/29/72
W-145	39N	11E	13.7c	98	DOL		Pr	Drilled 1957
W-146	39N	11E	13.4e	113	DOL		Pr	Drilled 1940
W-147	39N	11E	11.2e	347	DOL		Pr	Drilled 3/65
W-148	39N	11E	36.8c	125	DOL		Pr	Drilled 1957
W-149	39N	11E	36.2a	325	DOL		Pr	Drilled 10/25/70
W-150	39N	11E	36.1b	300	DOL		Pr	Drilled 06/09/69
W-151	39N	11E	36.2b	110	DOL		Pr	Drilled 02/08/73
W-152	39N	11E	36.2f	180	DOL		Pr	Drilled 08/16/72
W-153	39N	11E	36.6f	120	DOL		Pr	Drilled 10/10/74
W-154	39N	11E	36.5h	145	DOL		Pr	Drilled 05/13/74

[1]Illinois Water Survey, 1987.

EXHIBIT C

Well Inventory of Western Cook and Eastern DuPage Counties, 1987[1]

Well I.D.	Location Specifics T	R	SEC.	Total Depth (ft.)	Indicated Formation	Reported Status	Public (Pu) Private (Pr)	Notes
W-155	39N	11E	36.6e	120	DOL		Pr	Drilled 10/10/74
W-156	39N	11E	36.6b	180	DOL		Pr	Drilled 02/21/74
W-157	39N	11E	36.6a	170	DOL		Pr	Drilled 11/19/74
W-158	39N	11E	36.2a	175	DOL		Pr	Drilled 07/05/77
W-159	39N	11E	36.6f	160	DOL		Pr	Drilled 04/07/75
W-160	39N	11E	36.7e	100	DOL		Pr	Drilled 08/06/75
W-161	39N	11E	36.7b	140	DOL		Pr	Drilled 04/28/75
W-162	39N	11E	36.6a	140	DOL		Pr	Drilled 09/30/76
W-163	39N	11E	35.5b	139	DOL		Pr	Drilled 1959
W-164	39N	11E	35.7d	230	DOL		Pr	Drilled 06/14/71
W-165	39N	11E	35.8e	150	DOL		Pr	Drilled 1958
W-166	39N	11E	35.2b	180	DOL		Pr	Drilled 06/22/71
W-167	39N	11E	35.6d	170	DOL		Pr	Drilled 03/16/73
W-168	39N	11E	35.3e	200	DOL		Pr	Drilled 12/03/73
W-169	39N	11E	35.2b	140	DOL		Pr	Drilled 06/12/78
W-170	39N	11E	35.6e	160	DOL		Pr	Drilled 06/17/77
W-171	39N	11E	35.3c	175	DOL		Pr	Drilled 06/09/76
W-172	39N	11E	35.1c	145	DOL		Pr	Drilled 07/22/76
W-173	39N	11E	35.1b	160	DOL		Pr	Drilled 11/05/76
W-174	39N	11E	35.1c	120	DOL		Pr	Drilled 12/03/76
W-175	39N	11E	35.5g	198	DOL	*	Pr	Drilled 04/09/76
W-176	39N	11E	34.7c	280	DOL		Pr	Drilled 05/24/85
W-177	39N	11E	34.7b	280	DOL		Pr	Drilled 05/24/85
W-178	39N	11E	27.7b	290	DOL		Pr	Drilled 06/10/85
W-179	39N	11E	27.6h	238	DOL		Pr	Drilled 12/57
W-180	39N	11E	27.6b	175	DOL		Pr	Drilled 06/18/68
W-181	39N	11E	27.4a	145	DOL		Pr	Drilled 08/15/68
W-182	39N	11E	27.6a	150	DOL		Pr	Drilled 06/20/68
W-183	39N	11E	27.7b	170	DOL		Pr	Drilled 09/28/68
W-184	39N	11E	27.5a	150	DOL	*	Pr	Drilled 08/25/69
W-185	39N	11E	27.5a	150	DOL		Pr	Drilled 07/13/70
W-186	39N	11E	27.1a	290	DOL		Pr	Drilled 06/10/85

*For Irrigation

[1]Illinois Water Survey, 1987.

EXHIBIT C

Well Inventory of Western Cook and Eastern DuPage Counties, 1987[1]

Well I.D.	Location Specifics T	R	SEC.	Total Depth (ft.)	Indicated Formation	Reported Status	Public (Pu) Private (Pr)	Notes
W-187	39N	11E	27.5e	150	DOL		Pr	Drilled 06/28/77
W-188	39N	11E	27.5g	150	DOL	*	Pr	Drilled 06/01/74
W-189	39N	11E	27.7f	180	DOL		Pr	Drilled 05/07/71
W-190	39N	11E	27.2f	280	DOL		Pr	Drilled 07/07/72
W-191	39N	11E	27.7f	320	DOL		Pr	Drilled 05/06/71
W-192	39N	11E	27.6c	210	DOL	*	Pr	Drilled 05/06/71
W-193	39N	11E	27.6b	200	DOL		Pr	Drilled 06/08/71
W-194	39N	11E	27.7f	180	DOL	*	Pr	Drilled 09/28/71
W-195	39N	11E	27.5g	235	DOL		Pr	Drilled 05/07/71
W-196	39N	11E	27.1a	135	DOL		Pr	Drilled 10/16/69
W-197	39N	11E	27.6a	103	DOL	*	Pr	Drilled 09/29/70
W-198	39N	11E	27.3c	150	DOL		Pr	Drilled 10/31/67
W-199	39N	11E	27.3d	150	DOL		Pr	Drilled 10/14/67
W-200	39N	11E	27.5e	180	DOL		Pr	Drilled 07/20/68
W-201	39N	11E	27.1a	148	DOL		Pr	Drilled 04/26/69
W-202	39N	11E	27.2b	170	DOL	*	Pr	Drilled 09/30/71
W-203	39N	11E	27.7f	180	DOL		Pr	Drilled 11/16/71
W-204	39N	11E	27.7f	280	DOL		Pr	Drilled 11/16/71
W-205	39N	11E	27	160	DOL	*	Pr	Drilled 05/07/73
W-206	39N	11E	27.2f	160	DOL	*	Pr	Drilled 09/08/74
W-207	39N	11E	27.8g	180	DOL		Pr	Drilled 10/29/76
W-208	39N	11E	27.2f	160	DOL		Pr	Drilled 07/22/74
W-209	39N	11E	27.5c	150	DOL		Pr	Drilled 07/24/74
W-210	39N	11E	27.3f	140	DOL		Pr	Drilled 08/05/74
W-211	39N	11E	27.2f	200	DOL		Pr	Drilled 07/22/75
W-212	39N	11E	27.5f	160	DOL		Pr	Drilled 06/22/77
W-213	39N	11E	27.5b	160	DOL		Pr	Drilled 05/16/70
W-214	39N	11E	27.2f	185	DOL	**	Pr	Drilled 02/17/77
W-215	39N	11E	27.2f	180	DOL	**	Pr	Drilled 05/05/77
W-216	39N	11E	26.5a	160	DOL		Pr	Drilled 11/16/67
W-217	39N	11E	26.2b	60	DOL		Pr	Drilled 04/21/77
W-218	39N	11E	26.2f	80	DOL		Pr	Drilled 04/21/77

*For Irrigation

**Sprinkler System Well

[1]Illinois Water Survey, 1987.

EXHIBIT C

Well Inventory of Western Cook and Eastern DuPage Counties, 1987[1]

Well I.D.	Location Specifics T	R	SEC.	Total Depth (ft.)	Indicated Formation	Reported Status	Public (Pu) Private (Pr)	Notes
W-219	39N	11E	26.8f	221	DOL		Pr	Drilled 03/19/85
W-220	39N	11E	25.2b	150	DOL		Pr	Drilled 05/08/67
W-221	39N	11E	25.3d	185	DOL		Pr	Drilled 08/01/67
W-222	39N	11E	25.2g	152	DOL		Pr	Drilled 7/67
W-223	39N	11E	25.4b	155	DOL		Pr	Drilled 7/67
W-224	39N	11E	25.1g	155	DOL		Pr	Drilled 7/67
W-225	39N	11E	25.1f	185	DOL		Pr	Drilled 5/68
W-226	39N	11E	25.2b	150	DOL		Pr	Drilled 06/05/68
W-227	39N	11E	25.1g	175	DOL		Pr	Drilled 12/68
W-228	39N	11E	25.1f	185	DOL		Pr	Drilled 05/68
W-229	39N	11E	25.1h	120	DOL		Pr	Drilled 01/19/69
W-230	39N	11E	25.3e	201	DOL		Pr	Drilled 04/30/70
W-231	39N	11E	25.2b	200	DOL		Pr	Drilled 09/10/71
W-232	39N	11E	25	100	DOL		Pr	Drilled 06/19/75
W-233	39N	11E	25.5b	100	DOL		Pr	Drilled 07/22/76
W-234	39N	11E	25.2g	138	DOL		Pr	Drilled 07/67
W-235	39N	11E	25.3b	395	DOL		Pr	Drilled 03/04/71
W-236	39N	11E	25.7h	260	DOL		Pr	Drilled 07/13/71
W-237	39N	11E	24.4d	100	DOL		Pr	Drilled 1959
W-238	39N	11E	24.2g	350	DOL		Pr	Drilled 1957
W-239	39N	11E	24.7d	150	DOL		Pr	Drilled 6/64
W-240	39N	11E	24.3a	245	DOL		Pr	Drilled 4/59
W-241	39N	11E	24.5c	95	DOL		Pr	Drilled 1959
W-242	39N	11E	24.3a	245	DOL		Pr	Drilled 4/59
W-243	39N	11E	23.3g	90	DOL		Pr	Drilled 1959
W-244	39N	11E	23.2g	80	DOL		Pr	Drilled 1959
W-245	39N	11E	23.7e	133	DOL		Pr	Drilled 1959
W-246	39N	11E	23.8g	174	DOL		Pr	Drilled 4/68
W-247	39N	11E	23.8e	110	DOL		Pr	Drilled 09/12/73
W-248	39N	11E	23.8e	110	DOL		Pr	Drilled 05/03/73
W-249	39N	11E	23.4f	150	DOL		Pr	Drilled 01/14/70
W-250	39N	11E	23.2b	140	DOL		Pr	Drilled 06/29/77

[1]Illinois Water Survey, 1987.

EXHIBIT C

Well Inventory of Western Cook and Eastern DuPage Counties, 1987[1]

Well I.D.	Location Specifics T	R	SEC.	Total Depth (ft.)	Indicated Formation	Reported Status	Public (Pu) Private (Pr)	Notes
W-251	39N	11E	23.7f	110	DOL		Pr	Drilled 12/31/75
W-252	39N	11E	23.8f	140	DOL		Pr	Drilled 07/18/74
W-253	39N	11E	23.6f	100	DOL		Pr	Drilled 07/20/70
W-254	39N	11E	23.5e	105	DOL	*	Pr	Drilled 07/19/72
W-255	39N	11E	23.5e	105	DOL	*	Pr	Drilled 05/22/72
W-256	39N	11E	23.5e	105	DOL	*	Pr	Drilled 06/26/73
W-257	39N	11E	23.5f	110	DOL		Pr	Drilled 07/30/75
W-258	39N	11E	23.4b	150	DOL	*	Pr	Drilled 06/20/77
W-259	39N	11E	23.4d	100	DOL	***	Pr	Drilled 04/15/77
W-260	38N	12E	8.4h	356	DOL		Pr	Drilled 1955
W-261	38N	12E	8.2b	370	DOL		Pr	Drilled 06/22/64
W-262	38N	12E	8.6b	149.5	DOL		Pr	Drilled 7/50
W-263	38N	12E	4.1b	380	DOL		Pr	Drilled 4/67
W-264	38N	12E	4.4g	362	DOL		Pr	Drilled 1965
W-265	38N	12E	12	101	DOL		Pr	Drilled 1958
W-266	38N	11E	12.7g	100	DOL		Pr	Drilled 01/13/77
W-267	38N	11E	12.7g	90	DOL		Pr	Drilled 03/11/77
W-268	38N	11E	11.6h	162	DOL		Pr	Drilled 05/01/68
W-269	38N	11E	11.7c	100	DOL		Pr	Drilled 10/23/71
W-270	38N	11E	2.2f	135	DOL		Pr	Drilled 07/22/71
W-271	38N	11E	11.6c	200	DOL		Pr	Drilled 05/02/72
W-272	38N	11E	2.2h	220	DOL		Pr	Drilled 05/08/70
W-273	38N	11E	2.1h	165	DOL		Pr	Drilled 06/21/72
W-274	38N	11E	2.1g	160	DOL		Pr	Drilled 10/12/71
W-275	38N	11E	2.1g	230	DOL		Pr	Drilled 06/13/72
W-276	38N	11E	2.4g	165	DOL		Pr	Drilled 12/31/76
W-277	39N	12E	35.3h	2061	S.S.		Pr	Drilled 1937
W-278	39N	12E	33.2e	370	DOL		Pu	LaGrange Park #2
W-279	39N	12E	33.7a	1902	S.S.		Pr	Drilled 1926
W-280	39N	12E	33.5b	150	DOL		Pr	Drilled 09/17/75
W-281	39N	12E	32.8d	343	DOL		Pr	Drilled 08/02/66
W-282	39N	12E	32	1902	S.S.		Pr	Drilled 1926

*Irrigation Well

***Fire Protection Only (Sprinkler System)

[1]Illinois Water Survey, 1987.

EXHIBIT C

Well Inventory of Western Cook and Eastern DuPage Counties, 1987[1]

Well I.D.	Location Specifics T	R	SEC.	Total Depth (ft.)	Indicated Formation	Reported Status	Public (Pu) Private (Pr)	Notes
W-283	39N	12E	31.3c	118	DOL		Pr	Drilled 1936
W-284	39N	12E	31.1b	107	DOL		Pr	Drilled 1964
W-285	39N	12E	31.6h	252	DOL		Pr	Drilled 1965
W-286	39N	12E	30.1d	145	DOL		Pr	Drilled 09/05/74
W-287	39N	12E	30.1a	140	DOL		Pr	Drilled 05/03/74
W-288	39N	12E	30.1a	100	DOL		Pr	Drilled 07/25/69
W-289	39N	12E	30.3b	180	DOL		Pr	Drilled 07/15/83
W-290	39N	12E	30.1a	120	DOL		Pr	Drilled 08/17/76
W-291	39N	12E	29.8a	300	DOL		Pr	Drilled 02/25/83
W-292	39N	12E	29.8a	140	DOL		Pr	Drilled 1968
W-293	39N	12E	26.1c	112	DOL		Pr	Drilled 1964
W-294	39N	12E	22.7b	1560	S.S.		Pr	Drilled 05/59
W-295	39N	12E	22.7b	345	DOL		Pr	Drilled 03/19/69
W-296	39N	12E	22.8b	343	DOL		Pr	Drilled 1968
W-297	39N	12E	20.3e	140	DOL		Pr	Drilled 10/27/67
W-298	39N	12E	19.7d	252	DOL		Pr	Drilled 1959
W-299	39N	12E	19.5a	205	DOL		Pr	Drilled 07/05/72
W-300	39N	12E	19.8c	335	DOL		Pr	Drilled 1958
W-301	39N	12E	18.6a	201	DOL		Pr	Drilled 09/18/77
W-302	39N	12E	17.1c	305	DOL		Pr	Drilled 1949
W-303	39N	12E	17.1c	305	DOL		Pr	Drilled 1948
W-304	39N	12E	18.8e	130	DOL		Pr	Drilled 1957
W-305	39N	12E	17	1495	S.S.		Pr	Drilled -
W-306	39N	12E	17.2h	1240	S.S.		Pr	Drilled -
W-307	39N	12E	17.3b	175	DOL		Pr	Drilled 10/29/70
W-308	39N	12E	14	372	DOL		Pr	Drilled 03/47
W-309	39N	12E	11.5f	221	DOL		Pr	Drilled 1936
W-310	39N	12E	9.2g	1550	DOL		Pr	Drilled 1927
W-311	39N	12E	6.6c	1550	S.S.		Pr	Drilled 1928
W-312	39N	12E	5	240	DOL		Pr	Drilled 1945
W-313	39N	12E	6.7g	142	DOL		Pr	Drilled 11/30/68
W-314	39N	12E	5.6d	1841	S.S.		Pr	Drilled 1912

[1]Illinois Water Survey, 1987.

EXHIBIT C

Well Inventory of Western Cook and Eastern DuPage Counties, 1987[1]

Well I.D.	Location Specifics T	R	SEC.	Total Depth (ft.)	Indicated Formation	Reported Status	Public (Pu) Private (Pr)	Notes
W-315	39N	12E	5.5e	1850	S.S.		Pr	Drilled 06/09/13
W-316	39N	12E	5.7d	1849	S.S.		Pr	Drilled 11/27/12
W-317	39N	12E	5.7d	1202	S.S.		Pr	Drilled -
W-318	39N	12E	5.7d	1203	S.S.		Pr	Drilled 07/30/12
W-319	39N	12E	5	1830	S.S.		Pr	Drilled -
W-320	39N	12E	5.7d	1200	S.S.		Pr	Drilled 09/05/12
W-321	39N	12E	5.7d	1825	S.S.		Pr	Drilled 03/02/12
W-322	39N	12E	4.2b	1960	S.S.		Pr	Drilled 1940
W-323	39N	12E	4.2h	2007	S.S.		Pr	Drilled 1925
W-324	39N	12E	2.3g	306	DOL		Pr	Drilled 07/55
W-325	39N	12E	2.4g	360	DOL		Pr	Drilled 02/18/77
W-326	39N	12E	2.5g	123	DOL		Pr	Drilled 12/07/78

[1]Illinois Water Survey, 1987.

EXHIBIT D

EXHIBIT D

Well Inventory Map of Western Cook and Eastern DuPage Counties

Well Location Guide

ELMHURST, ILL.
N4152.5—W8752.5/7.5
1963
PHOTOREVISED 1972 AND 1980
DMA 3467 IV NW—SERIES V863

RIVER FOREST, ILL.
N4152.5—W8745/7.5
1963
PHOTOREVISED 1972
AMS 3467 IV NE—SERIES V863

HINSDALE, ILL.
N4145—W8752.5/7.5
1963
PHOTOREVISED 1972 AND 1980
DMA 3467 IV SW—SERIES V863

BERWYN, ILL.
N4145—W8745/7.5
1963
PHOTOREVISED 1972
AMS 3467 IV SE—SERIES V863

CONGRESS DEVELOPMENT COMPANY

31ST STREET LANDFILL

W-52 TO W-142
AND
W-178 TO W-215

KEY

- DEEP SANDSTONE WELLS (ACTIVE)
- DEEP SANDSTONE WELLS (ABANDONED)
- SHALLOW DOLOMITE WELLS (ACTIVE)
- SHALLOW DOLOMITE WELLS (ABANDONED)
- MUNICIPAL WELLS

WELL INVENTORY

scale 1" = 2000'	approved by	drawn by M.E.E.
date 10/19/87		revised

eldredge engineering associates, inc.
1601 north bond street
naperville, illinois 60540
(312) 369-2901

SEXTON/ THIRTY-FIRST ST. LANDFILL
PROVISO TWP. COOK CO. ILLINOIS

dwg 171-622
proj

EXHIBIT E

EXHIBIT E-1

Monitoring Well Locations - Revised

EXHIBIT E-1

Monitoring Well Locations - Revised

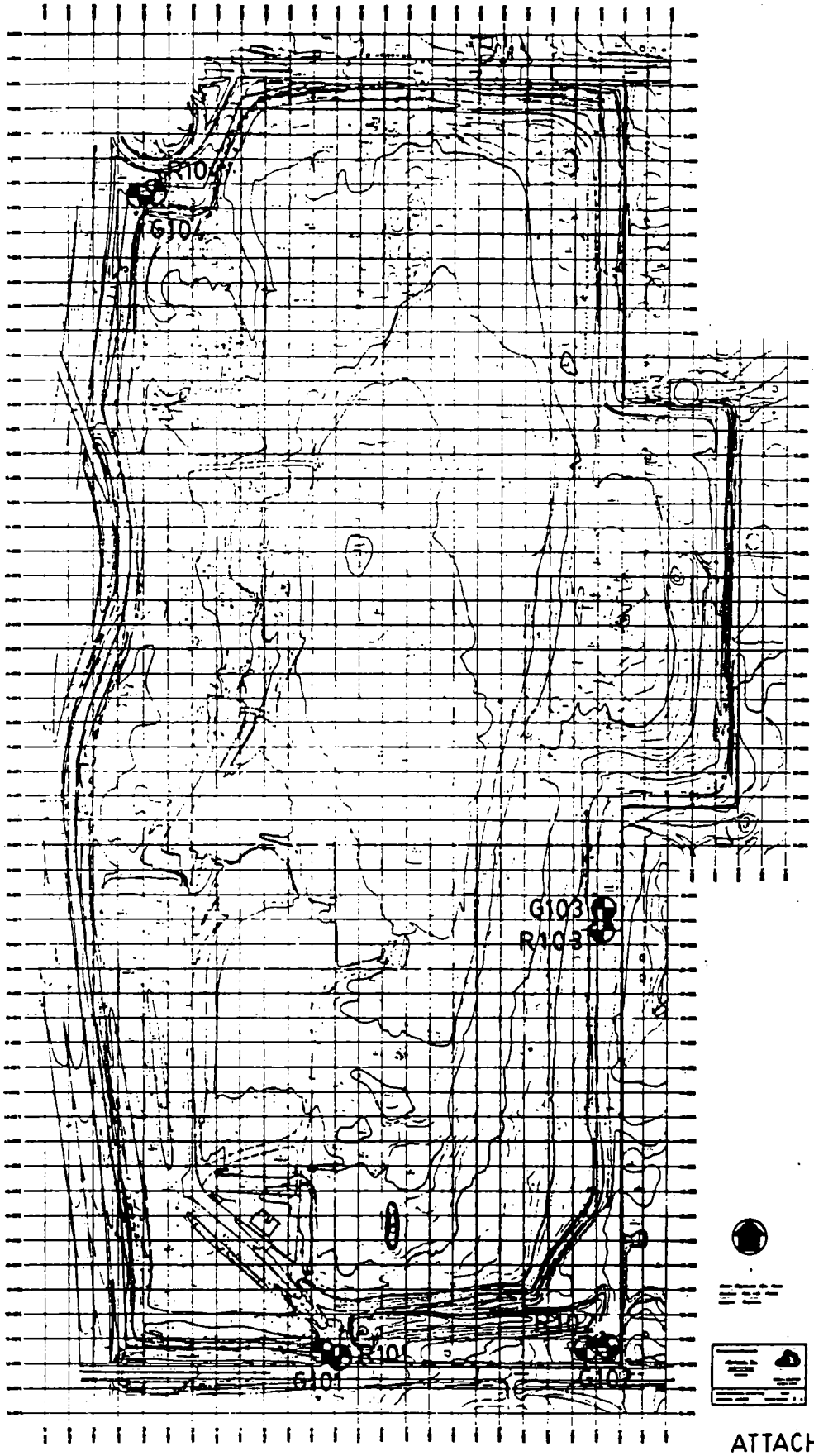

ATTACHMENT A

MONITORING WELL LOCATIONS

SEXTON/31st ST LANDFILL

PROVISO TWP COOK CO, ILL

EXHIBIT E-2

Records of Subsurface Exploration and Well Details

EXHIBIT E-2
Records of Subsurface Exploration and Well Details

SCHLEEDE-HAMPTON ASSOCIATES, INC. • CONSULTING ENGINEERS
CIVIL • GEOTECHNICAL • CONSTRUCTION MATERIALS
1601 N. BOND STREET • SUITE 108 • NAPERVILLE, ILLINOIS 60540 • 312/369-0710

February 16, 1988

Eldredge Engineering Associates, Inc.
1601 N. Bond Street, Suite 101
Naperville, Illinois 60540

Attention: Mr. Richard Eldredge, P.E.

Re: Sexton 31st Street Landfill
Well Installation
Oak Brook, Illinois
SHA File No. 27340

Gentlemen:

As requested, Schleede-Hampton Associates has completed the installation of four (4) wells at the above referenced site.

This work was performed between January 7, 1988 and February 10, 1988. Details of the installation are given on the attached Records of Subsurface Exploration and Well Details.

Upon completion, the wells were evacuated and purged of sediment with nitrogen gas. Water levels of the wells installed, and previously installed wells adjacent to them were measured. Water level data is provided on the attached Water Level Summary Sheet.

Thank you for the opportunity to be of continuing service. If you have any questions regarding the well installations or water level measurements, please contact us.

Very truly yours,

SCHLEEDE-HAMPTON ASSOCIATES, INC.

William D. Prigge/dl

William D. Prigge, P.E.
Project Engineer

WDP/dlh
Attachments

Sexton 31st Street Landfill
Cook County, Illinois
SHA File No. 27340

WATER LEVEL SUMMARY SHEET

Date/Time	Well	Rim Elev.*	Depth to Water	Water Elev.
1/22/88/9:00 a.m.	R-101	669.69	38.30	631.39
	G-101	667.69	27.80	639.89
	R-103	654.00	16.00	638.00
	G-103	652.60	13.50	639.10
	R-104	669.86	25.00	644.86
	G-104	668.22	27.30	640.92
2/1/88/2:00 p.m.	R-101	669.69	37.90	631.79
	G-101	667.69	21.50	646.19
	R-103	654.00	15.70	638.30
	G-103	652.60	13.20	639.40
	R-104	669.86	24.90	644.96
	G-104	668.22	26.20	642.02
2/11/88/10:00 a.m.	R-101	669.69	37.60	632.09
	G-101	667.69	29.10	638.59
	R-102	655.83	17.80	638.03
	G-102	652.18	4.70	647.48
	R-103	654.00	16.10	637.90
	G-103	652.60	13.40	639.20
	R-104	669.86	24.90	644.96
	G-104	668.22	24.90	643.32

*Using rim elevations 2/19/88

MONITORING WELL DETAIL

SITE: Sexton 31st Street Landfill
Cook County, Illinois

WELL IDENTIFICATION: R-101
SITE COORDINATES: 16+95W, 51+50S

ELEV	WELL DETAIL	REMARKS

USGS DATUM

669.69
667.40
551.19
547.90

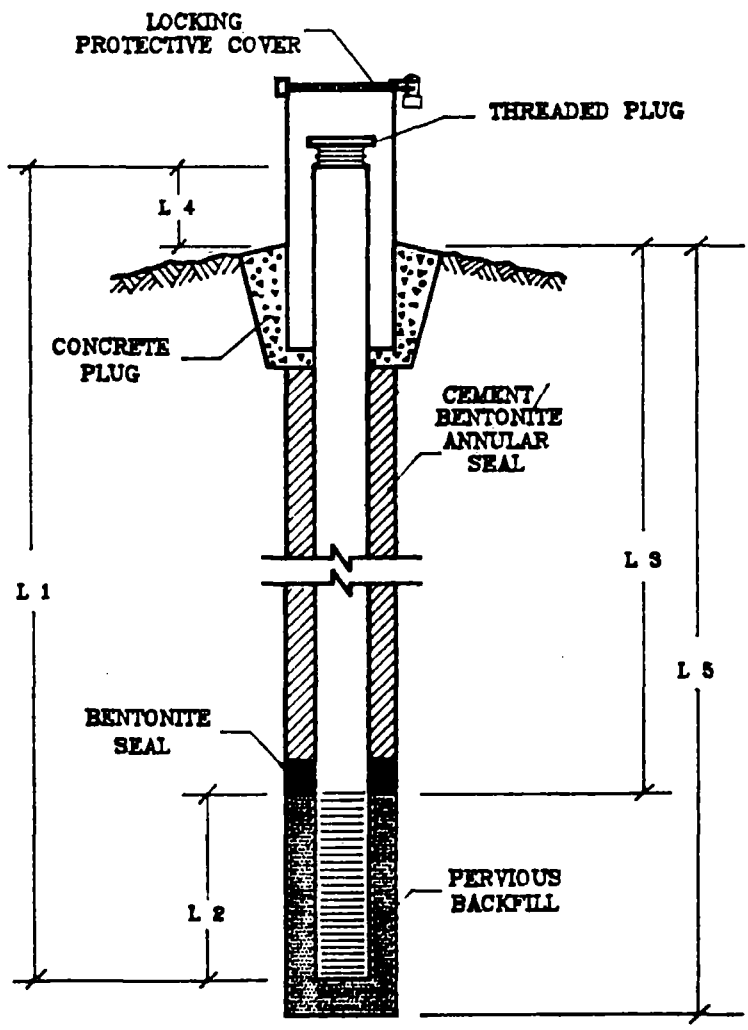

DATE OF DRILLING: 1/12/88
DRILLER: SHA/FD
WELL CASING: SCH. 40 PVC
WELL DIAMETER: 2"

L 1 = 118.50'
L 2 = 15.0'
L 3 = 101.21'
L 4 = 2.29'
L 5 = 119.50'

LOCATION MAP

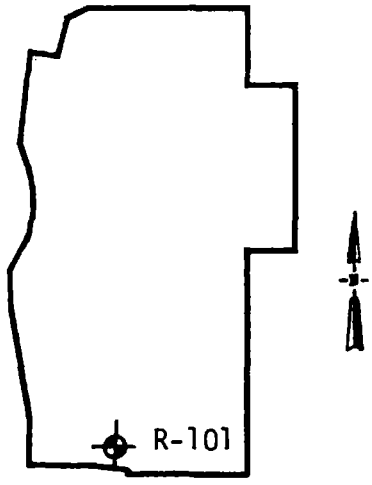

PROJECT NO.:

eldredge engineering associates, inc.
1601 north bond street
naperville, illinois 60540

MONITORING WELL DETAIL

SITE: Sexton 31st Street Landfill

WELL IDENTIFICATION: R-102
SITE COORDINATES: 5+20W/51+90S

ELEV	WELL DETAIL	REMARKS

USGS DATUM

655.83
655.00
545.63
545.63

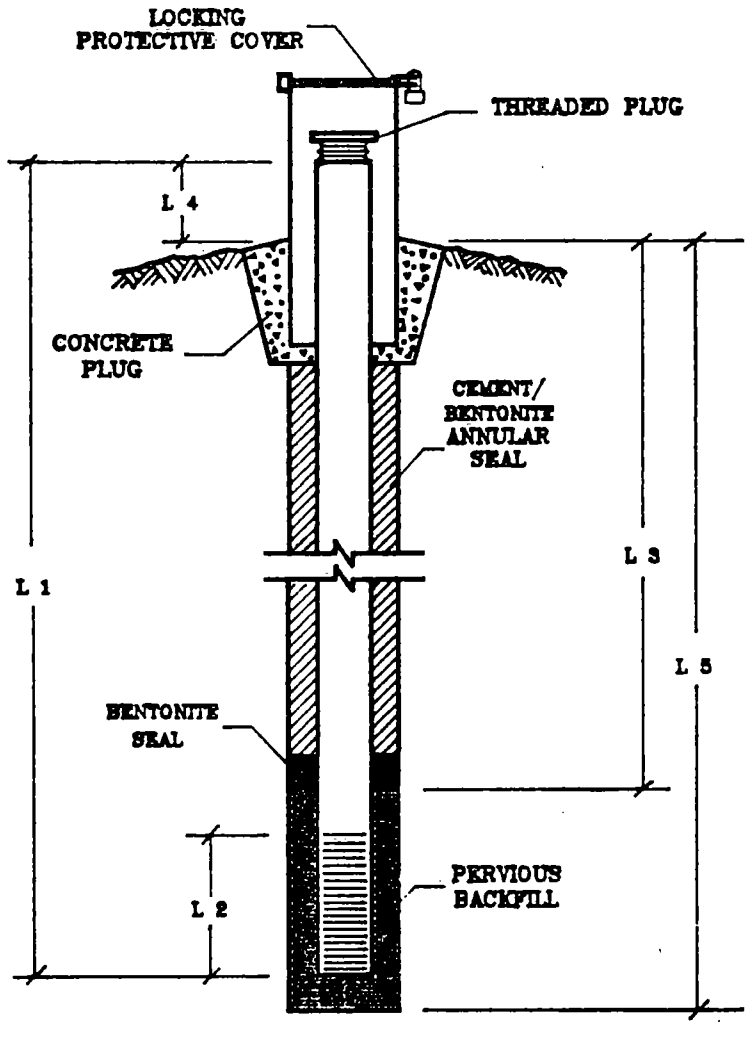

Note: Bottom of hole and tip at same elevation

DATE OF DRILLING: 2/10/88
DRILLER: FD/SHA
WELL CASING: SCH. 40 PVC
WELL DIAMETER: 2"

L 1 = 110.20
L 2 = 15.0
L 3 = 94.37'
L 4 = 0.83'
L 5 = 109.37'

LOCATION MAP

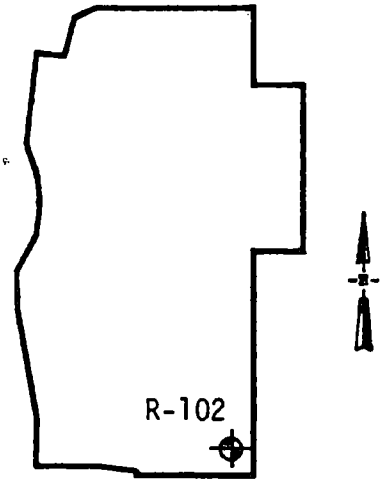

PROJECT NO.:

eldredge engineering associates, inc.
1601 north bond street
naperville, illinois 60540

MONITORING WELL DETAIL

SITE: Sexton 31st Street Landfill
Cook County, Illinois

WELL IDENTIFICATION: R-103
SITE COORDINATES: 5+05W, 34+30S

ELEV	WELL DETAIL	REMARKS

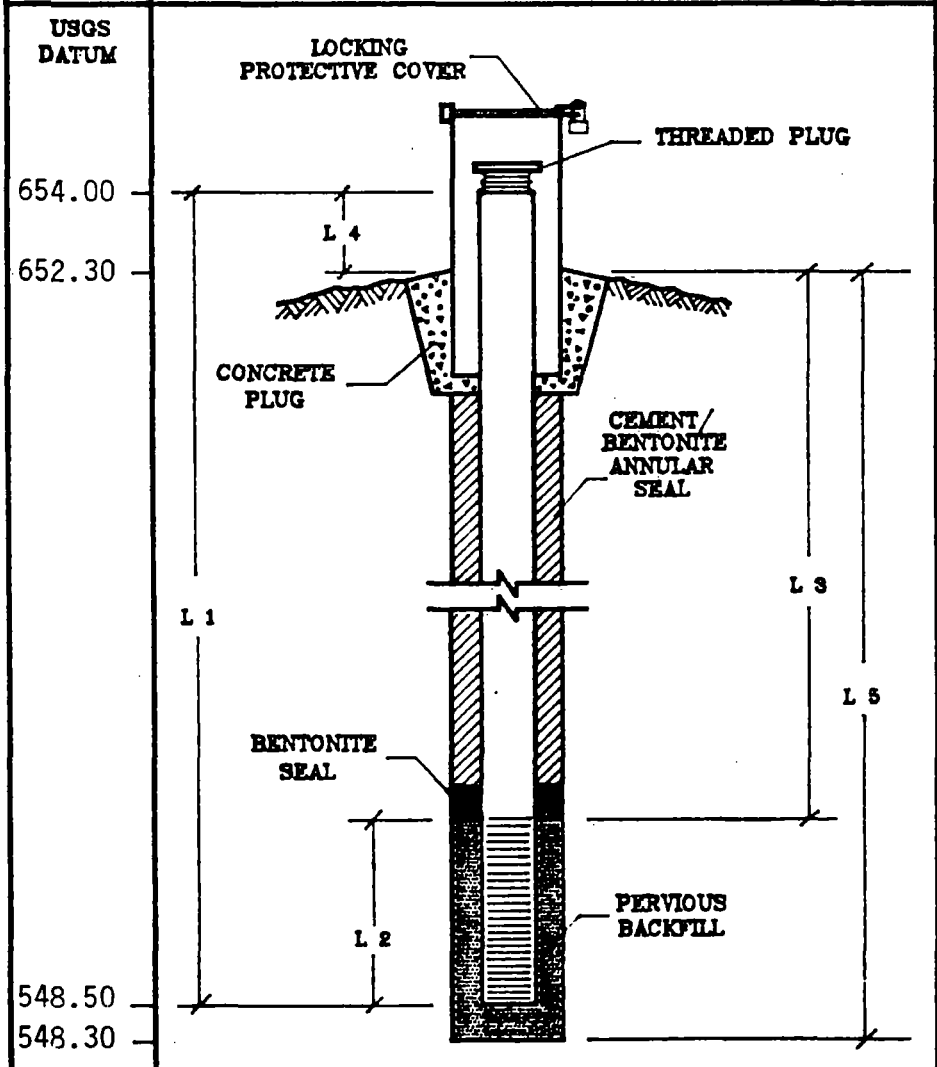

DATE OF DRILLING: 1/14/88
DRILLER: SHA/FD
WELL CASING: SCH. 40 PVC
WELL DIAMETER: 2"

L 1 = 105.5'
L 2 = 15.0'
L 3 = 88.80'
L 4 = 1.70'
L 5 = 104.00'

LOCATION MAP

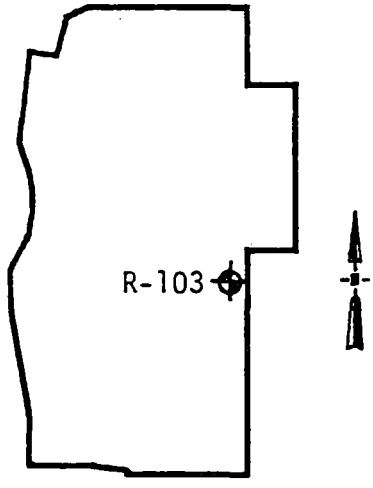

PROJECT NO.:

eldredge engineering associates, inc.
1601 north bond street
naperville, illinois 60540

MONITORING WELL DETAIL

SITE: Sexton 31st Street Landfill
Cook County, Illinois

WELL IDENTIFICATION: R-104
SITE COORDINATES: 24+70W/4+00S

ELEV	WELL DETAIL	REMARKS

USGS DATUM

669.86
668.20
549.36
549.36

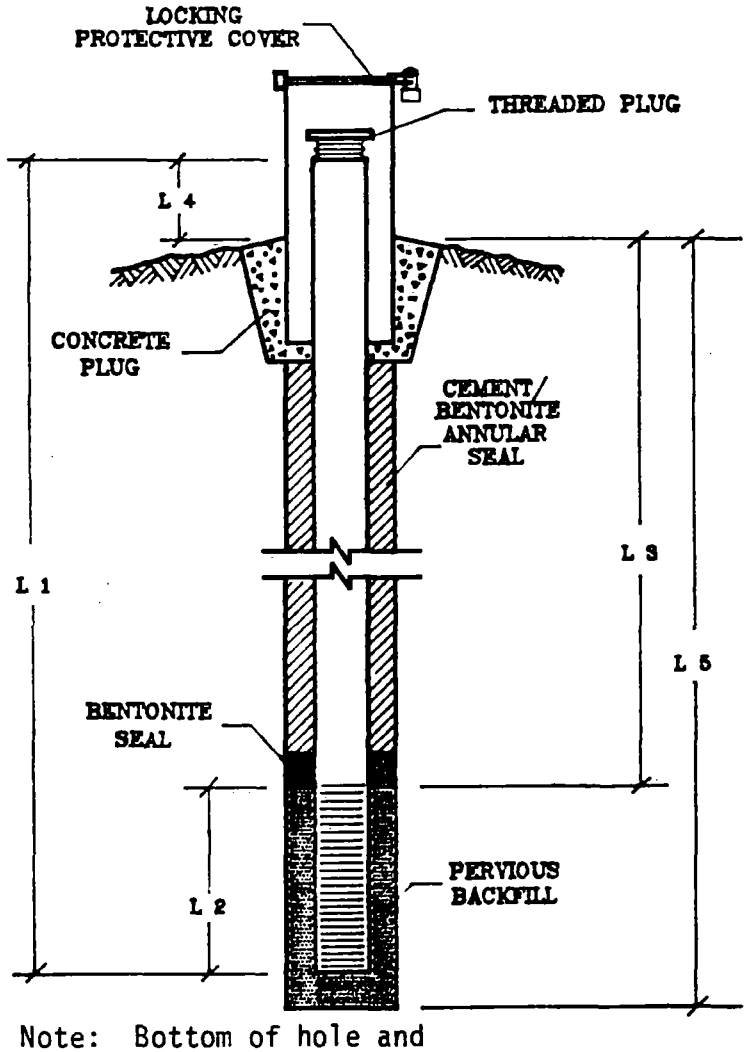

Note: Bottom of hole and tip at same elevation

DATE OF DRILLING: 1/16/88
DRILLER: SHA/FD
WELL CASING: SCH. 40 PVC
WELL DIAMETER: 2"

L 1 = 120.50'
L 2 = 15.0'
L 3 = 103.84'
L 4 = 1.66'
L 5 = 118.84'

LOCATION MAP

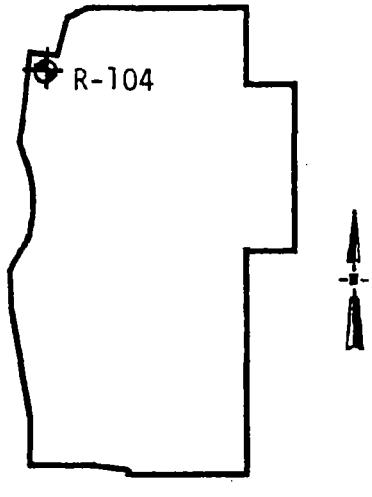

PROJECT NO.:

eldredge engineering associates, inc.
1601 north bond street
naperville, illinois 60540

SCHLEEDE-HAMPTON ASSOCIATES, INC. • CONSULTING ENGINEERS

RECORD OF SUBSURFACE EXPLORATION

BORING R-101 **PAGE** 1 **OF** 2

PROJECT NAME Monitoring Well Installation
SHA PROJECT NO. 27340
SITE LOCATION 31st Street Landfill
Oak Brook, Illinois
Site Coordinates: 16+95W/51+50S

DATE STARTED 1/7/88
DATE COMPLETED 1/12/88
DRILLER SB **BORING METHOD** See below
GW ENCOUNTERED WHILE DRILLING Refer to
GROUND WATER, AT COMPLETION water level
GROUND WATER, AFTER summary sheets
HOLE CAVED, elsewhere

ELEV.	DESCRIPTION	DEPTH	SAMPLE	N	Qu	Qp	Wc	REMARKS
667.4±	Surface							
	Silty CLAY, trace to some Sand and Gravel, brown to grey	10, 20	Rotary drilling at this interval-classification of materials made from wash water cuttings					
	SAND and GRAVEL							
637.0±	Grey Dolomite with thin Shale seams ↑ Highly Fractured ↓	30	Rock Bit					
	Numerous Vugs	40, 50	RC 1 Rec=80% Rqd=45%					
	Few Vugs	60	RC 2 Rec=97% Rqd=64%					
		70	RC 3 Rec=100% Rqd=65%					
	(Continued)	80	RC 4 Rec=100% Rqd=85%					

SYMBOLS
- N: STANDARD PENETRATION, BLOWS/FT.
- Qu. UNCONFINED COMPRESSIVE STRENGTH, TONS/SQ. FT.
- Wc WATER CONTENT, %
- LL: LIQUID LIMIT, %
- PI: PLASTICITY INDEX, %
- Dd: NATURAL DRY DENSITY, LBS./CU. FT.
- Qp: HAND PENETROMETER, TONS/SQ. FT.
- GW: GROUND WATER

SAMPLE DESIGNATION
- SS— DRIVEN SPLIT SPOON 1 3/8" I.D., 2" O.D
- ST— PRESSED SHELBY TUBE
- AU— AUGER SAMPLE
- RC— ROCK CORE - NXM

BORING METHOD
- HSA—HOLLOW STEM AUGERS
- CFA—CONTINUOUS FLIGHT AUGERS
- C— CASING
- MD— MUD DRILLING

NOTE: The stratification lines represent the approximate boundary between soil types and the transition may be gradual.

SCHLEEDE-HAMPTON ASSOCIATES, INC. • CONSULTING ENGINEERS

RECORD OF SUBSURFACE EXPLORATION

BORING R-101 PAGE 2 OF 2

PROJECT NAME Monitoring Well Installation

SHA PROJECT NO. 27340

SITE LOCATION 31st Street Landfill
Oak Brook, Illinois

Site Coordinates: 16+95W/51+50S

DATE STARTED 1/7/88
DATE COMPLETED 1/12/88
DRILLER SB BORING METHOD See Below
GW ENCOUNTERED WHILE DRILLING Refer to
GROUND WATER, AT COMPLETION water level
GROUND WATER, AFTER Summary Sheets
HOLE CAVED, elsewhere

ELEV.	DESCRIPTION	DEPTH	SAMPLE	N	Qu	Qp	Wc	REMARKS
	80.0'							
	Some Vugs	90	RC 5 Rec=100% Rqd=80%					
	Some Vugs	100	RC 6 Rec=100% Rqd=82%					
	Few Vugs	110	Rc 7 Rec=100% Rqd=100%					
	15' Screen		RC 8 Rec=100% Rqd=100%					
551.9	Few Inclusions							
	End of Boring @ 119.5'	120						
	Installed 2" PVC Well Bottom of well elev.= 551.19 See Monitoring well detail. Boring Method: 6" O.D. CFA to 10' Set 10' of 6" casing 3 7/8" rock bit with re-circulated drilling mud to 30'. Set 30' of 4" casing. 2 15/16" rock bit with re-circulated drilling mud to 42'. Set 42' of 3" casing. NX core to 119.5' w/clear water Boring flushed with clear water prior to setting well.							

SYMBOLS
- N: STANDARD PENETRATION, BLOWS/FT.
- Qu: UNCONFINED COMPRESSIVE STRENGTH, TONS/SQ. FT.
- Wc: WATER CONTENT, %
- LL: LIQUID LIMIT, %
- PI: PLASTICITY INDEX, %
- Dd: NATURAL DRY DENSITY, LBS./CU. FT.
- Qp: HAND PENETROMETER, TONS/SQ. FT.
- GW: GROUND WATER

SAMPLE DESIGNATION
- SS— DRIVEN SPLIT SPOON 1 3/8" I.D., 2" O.D.
- ST— PRESSED SHELBY TUBE
- AU— AUGER SAMPLE
- RC— ROCK CORE - NXM

BORING METHOD
- HSA—HOLLOW STEM AUGERS
- CFA—CONTINUOUS FLIGHT AUGERS
- C— CASING
- MD— MUD DRILLING

NOTE: The stratification lines represent the approximate boundary between soil types and the transition may be gradual

SCHLEEDE-HAMPTON ASSOCIATES, INC. • CONSULTING ENGINEERS

RECORD OF SUBSURFACE EXPLORATION

BORING R-102 PAGE 1 OF 2

PROJECT NAME Monitoring Well Installation

SHA PROJECT NO. 27340

SITE LOCATION 31st Street Landfill
Oak Brook, Illinois

Site Coordinates: 5+20W/51+90S

DATE STARTED 2/5/88

DATE COMPLETED 2/10/88

DRILLER N.E. BORING METHOD See Below

GW ENCOUNTERED WHILE DRILLING Refer to

GROUND WATER, AT COMPLETION water level

GROUND WATER, AFTER summary sheets

HOLE CAVED, elsewhere

ELEV.	DESCRIPTION	DEPTH	SAMPLE	N	Qu	Qp	Wc	REMARKS
654.6±	Surface							
	Silty CLAY, black, TOPSOIL							
	Silty CLAY, tr. to so. Sand and Gravel, brown							
	SAND and GRAVEL	10	Rock Bit					
	Grey Dolomite Few Vugs		RC 1 Rec=86% Rqd=0%					
		20	RC 2 Rec=95% Rqd=18%					
		30	RC 3 Rec=95% Rqd=39%					
	Few Inclusions Some Vugs	40	RC 4 Rec=100% Rqd=17%					
	Few Vugs	50	RC 5 Rec=100% Rqd=50%					
	Some Vugs	60	RC 6 Rec=95% Rqd=4%					
	Few Vugs	70	RC 7 Rec=100% Rqd=43%					
	Continued	80						

SYMBOLS

N: STANDARD PENETRATION, BLOWS/FT.
Qu: UNCONFINED COMPRESSIVE STRENGTH, TONS/SQ. FT.
Wc WATER CONTENT, %
LL: LIQUID LIMIT, %
PI: PLASTICITY INDEX, %
Dd: NATURAL DRY DENSITY, LBS./CU. FT.
Qp: HAND PENETROMETER, TONS/SQ. FT.
GW: GROUND WATER

SAMPLE DESIGNATION

SS— DRIVEN SPLIT SPOON 1 3/8" I.D., 2" O.D.
ST— PRESSED SHELBY TUBE
AU— AUGER SAMPLE
RC— ROCK CORE - NXM

BORING METHOD

HSA—HOLLOW STEM AUGERS
CFA—CONTINUOUS FLIGHT AUGERS
C— CASING
MD— MUD DRILLING

NOTE: The stratification lines represent the approximate boundary between soil types and the transition may be gradual.

SCHLEEDE-HAMPTON ASSOCIATES, INC. • CONSULTING ENGINEERS

RECORD OF SUBSURFACE EXPLORATION

BORING R-102 PAGE 2 OF 2

PROJECT NAME Monitoring Well Installation
SHA PROJECT NO. 27340
SITE LOCATION 31st Street Landfill
Oak Brook, Illinois
Site Coordinates: 5+20W/51+90S

DATE STARTED 2/5/88
DATE COMPLETED 2/10/88
DRILLER N.E. BORING METHOD See Below
GW ENCOUNTERED WHILE DRILLING Refer to
GROUND WATER, AT COMPLETION water level
GROUND WATER, AFTER summary sheets
HOLE CAVED, elsewhere

ELEV.	DESCRIPTION	DEPTH	SAMPLE	N	Qu	Qp	Wc	REMARKS
	80.0'							
	Grey Dolomite		RC 8 Rec=100% Rqd=60%					
545.63	Few Vugs		RC 9 Rec=100% Rqd=53%					
	No Vugs 15' Screen		RC 10 Rec=100% Rqd=87%					
	End of Boring @ 109.0'							
	Installed 2" PVC well Bottom of well elev.= 545.63 See Monitoring Well Detail							
	Boring Method: 6" O.D. CFA to 12.5' Ream hole to 12.5' with 5 7/8" rock bit Set 12.5' of 6" casing							
	NX core to 19.5' Drill rig broke down Ream hole to 19.5' with 3 7/8" rock bit Set 19.5' of 4" casing NX core to 109.0' Boring flushed with clear water prior to setting well.							

SYMBOLS
N: STANDARD PENETRATION, BLOWS/FT.
Qu: UNCONFINED COMPRESSIVE STRENGTH, TONS/SQ. FT.
Wc WATER CONTENT, %
LL: LIQUID LIMIT, %
PI: PLASTICITY INDEX, %
Dd: NATURAL DRY DENSITY, LBS./CU. FT.
Qp: HAND PENETROMETER, TONS/SQ. FT.
GW: GROUND WATER

SAMPLE DESIGNATION
SS— DRIVEN SPLIT SPOON 1 3/8" I.D., 2" O.D.
ST— PRESSED SHELBY TUBE
AU— AUGER SAMPLE
RC— ROCK CORE - NXM

BORING METHOD
HSA—HOLLOW STEM AUGERS
CFA—CONTINUOUS FLIGHT AUGERS
C— CASING
MD— MUD DRILLING

NOTE: The stratification lines represent the approximate boundary between soil types and the transition may be gradual.

SCHLEEDE-HAMPTON ASSOCIATES, INC. • CONSULTING ENGINEERS

RECORD OF SUBSURFACE EXPLORATION

BORING R-103 **PAGE** 1 **OF** 2

PROJECT NAME Monitoring Well Installation
SHA PROJECT NO. 27340
SITE LOCATION 31st Street Landfill
Oak Brook, Illinois
Site Coordinates: 5+05W/34+30S

DATE STARTED 1/8/88
DATE COMPLETED 1/14/88
DRILLER SB **BORING METHOD** See Below
GW ENCOUNTERED WHILE DRILLING Refer to
GROUND WATER, AT COMPLETION water level
GROUND WATER, AFTER summary sheets
HOLE CAVED, elsewhere

ELEV.	DESCRIPTION	DEPTH	SAMPLE	N	Qu	Qp	Wc	REMARKS
651.8±	Surface							
	Silty CLAY, trace to some Sand and Gravel, brown to grey	10, 20	Rotary drilling this interval - Classification of materials made from wash water cuttings					
	SAND and GRAVEL	30						
614±	Grey Dolomite with thin Shale seams	40						
	Highly Fractured	50, 60	Rock Bit					
	Some inclusions	70	RC 1 Rec=83% Rqd=8%					
	(Continued)	80						

SYMBOLS
- N: STANDARD PENETRATION, BLOWS/FT.
- Qu: UNCONFINED COMPRESSIVE STRENGTH, TONS/SQ. FT.
- Wc: WATER CONTENT, %
- LL: LIQUID LIMIT, %
- PI: PLASTICITY INDEX, %
- Dd: NATURAL DRY DENSITY, LBS./CU. FT.
- Qp: HAND PENETROMETER, TONS/SQ. FT.
- GW: GROUND WATER

SAMPLE DESIGNATION
- SS— DRIVEN SPLIT SPOON 1 3/8" I.D., 2" O.D.
- ST— PRESSED SHELBY TUBE
- AU— AUGER SAMPLE
- RC— ROCK CORE - NXM

BORING METHOD
- HSA—HOLLOW STEM AUGERS
- CFA—CONTINUOUS FLIGHT AUGERS
- C— CASING
- MD— MUD DRILLING

NOTE. The stratification lines represent the approximate boundary between soil types and the transition may be gradual.

SCHLEEDE-HAMPTON ASSOCIATES, INC. • CONSULTING ENGINEERS

RECORD OF SUBSURFACE EXPLORATION

BORING R-103 PAGE 2 OF 2

PROJECT NAME Monitoring Well Installation

SHA PROJECT NO. 27340

SITE LOCATION 31st Street Landfill
Oak Brook, Illinois

Site Coordinates: 5+05W/34+30S

DATE STARTED 1/8/88
DATE COMPLETED 1/14/88
DRILLER SB BORING METHOD See Below
GW ENCOUNTERED WHILE DRILLING Refer to
GROUND WATER, AT COMPLETION water level
GROUND WATER, AFTER summary sheets
HOLE CAVED, elsewhere

ELEV.	DESCRIPTION	DEPTH	SAMPLE	N	Qu	Qp	Wc	REMARKS
	80.0'							
	Few inclusions		RC 2 Rec=100% Rqd=71%					
	Few Vugs	90	RC 3 Rec=100% Rqd=92%					
	15' screen	100	RC 4 Rec=100% Rqd=82%					
548.50	End of Boring @ 103.5'							
	Installed 2" PVC well Bottom of well elev.= 548.50 See Monitoring Well Detail.	110						
	Boring Method: 6" O.D. CFA to 10'. Set 10' of 6" casing. 3 7/8" rock bit with re-circulated drilling mud to 70.5. Set 70.5' of 4" casing. NX core to 103.5'. Boring flushed with clear water prior to well instal-lation.	120						

SYMBOLS
N: STANDARD PENETRATION, BLOWS/FT.
Qu: UNCONFINED COMPRESSIVE STRENGTH, TONS/SQ. FT.
Wc: WATER CONTENT, %
LL: LIQUID LIMIT, %
PI: PLASTICITY INDEX, %
Dd: NATURAL DRY DENSITY, LBS./CU. FT.
Qp: HAND PENETROMETER, TONS/SQ. FT.
GW: GROUND WATER

SAMPLE DESIGNATION
SS — DRIVEN SPLIT SPOON 1 3/8" I.D., 2" O.D.
ST — PRESSED SHELBY TUBE
AU — AUGER SAMPLE
RC — ROCK CORE - NXM

BORING METHOD
HSA — HOLLOW STEM AUGERS
CFA — CONTINUOUS FLIGHT AUGERS
C — CASING
MD — MUD DRILLING

NOTE: The stratification lines represent the approximate boundary between soil types and the transition may be gradual

SCHLEEDE-HAMPTON ASSOCIATES, INC. • CONSULTING ENGINEERS

RECORD OF SUBSURFACE EXPLORATION

BORING R-104 PAGE 1 OF 2

PROJECT NAME Monitoring Well Installation

SHA PROJECT NO. 27340

SITE LOCATION 31st Street Landfill
Oak Brook, Illinois

Site Coordinates: 24+70W/4+00S

DATE STARTED 1/14/88

DATE COMPLETED 1/16/88

DRILLER WH BORING METHOD See Below

GW ENCOUNTERED WHILE DRILLING Refer to

GROUND WATER, AT COMPLETION water level

GROUND WATER, AFTER summary sheets

HOLE CAVED, elsewhere

ELEV.	DESCRIPTION	DEPTH	SAMPLE	N	Qu	Qp	Wc	REMARKS
667.9±	Surface							
	Silty CLAY, trace to some Sand and Gravel, brown to grey	10, 20	Rotary drilling this interval - Classification of materials made from wash water cuttings					
	SAND and GRAVEL	30						
	Silty CLAY, trace to some Sand and Gravel, brown to grey	40, 50, 60, 70						
588±	(Continued)	80						

SYMBOLS

N: STANDARD PENETRATION, BLOWS/FT.
Qu: UNCONFINED COMPRESSIVE STRENGTH, TONS/SQ. FT.
Wc WATER CONTENT, %
LL: LIQUID LIMIT, %
PI: PLASTICITY INDEX, %
Dd: NATURAL DRY DENSITY, LBS./CU. FT.
Qp: HAND PENETROMETER, TONS/SQ. FT.
GW: GROUND WATER

SAMPLE DESIGNATION

SS— DRIVEN SPLIT SPOON 1 3/8" I.D., 2" O.D.
ST— PRESSED SHELBY TUBE
AU— AUGER SAMPLE
RC— ROCK CORE - NXM

BORING METHOD

HSA—HOLLOW STEM AUGERS
CFA—CONTINUOUS FLIGHT AUGERS
C— CASING
MD— MUD DRILLING

NOTE: The stratification lines represent the approximate boundary between soil types and the transition may be gradual.

SCHLEEDE-HAMPTON ASSOCIATES, INC. • CONSULTING ENGINEERS

RECORD OF SUBSURFACE EXPLORATION

BORING R-104 **PAGE** 2 **OF** 2

PROJECT NAME Monitoring Well Installation
SHA PROJECT NO. 27340
SITE LOCATION 31st Street Landfill
Oak Brook, Illinois
Site Coordinates: 24+70W/4+00S

DATE STARTED 1/14/88
DATE COMPLETED 1/16/88
DRILLER WH **BORING METHOD** See below
GW ENCOUNTERED WHILE DRILLING Refer to
GROUND WATER, AT COMPLETION water level
GROUND WATER, AFTER summary sheets
HOLE CAVED, elsewhere

ELEV.	DESCRIPTION	DEPTH	SAMPLE	N	Qu	Qp	Wc	REMARKS
588.0±	80.0'							
	Grey Dolomite with thin Shale seams and few Vugs		Rock Bit					
			RC 1 Rec=100% Rqd=39%					
		90						
			RC 2 Rec=100% Rqd=93%					
		100						
			RC 3 Rec=100% Rqd=92%					
		110						
	15' Screen		RC 4 Rec=100% Rqd=83%					
549.36	End of Boring @ 118.5'	120						
	Installed 2" PVC well Bottom of well elev.= 549.36 See Monitoring Well Detail							
	Boring Method: 6" O.D. CFA to 10'. Set 10' of 6" casing. 3 7/8" rock bit with re-circulated drilling mud to 82.5'. Set 82.5' of 4" casing. NX core to 118.5'							

SYMBOLS
N: STANDARD PENETRATION, BLOWS/FT.
Qu: UNCONFINED COMPRESSIVE STRENGTH, TONS/SQ. FT
Wc WATER CONTENT, %
LL: LIQUID LIMIT, %
PI: PLASTICITY INDEX, %
Dd: NATURAL DRY DENSITY, LBS./CU. FT.
Qp: HAND PENETROMETER, TONS/SQ. FT.
GW: GROUND WATER

SAMPLE DESIGNATION
SS— DRIVEN SPLIT SPOON 1 3/8" I.D., 2" O.D.
ST— PRESSED SHELBY TUBE
AU— AUGER SAMPLE
RC— ROCK CORE - NXM

BORING METHOD
HSA—HOLLOW STEM AUGERS
CFA—CONTINUOUS FLIGHT AUGERS
C— CASING
MD— MUD DRILLING

NOTE: The stratification lines represent the approximate boundary between soil types and the transition may be gradual.

EXHIBIT E-3

Groundwater Contour Map

Deep Wells ("R")

EXHIBIT E-3 GROUNDWATER CONTOUR MAP

31ST STREET DEEP WELLS (2/11/88)

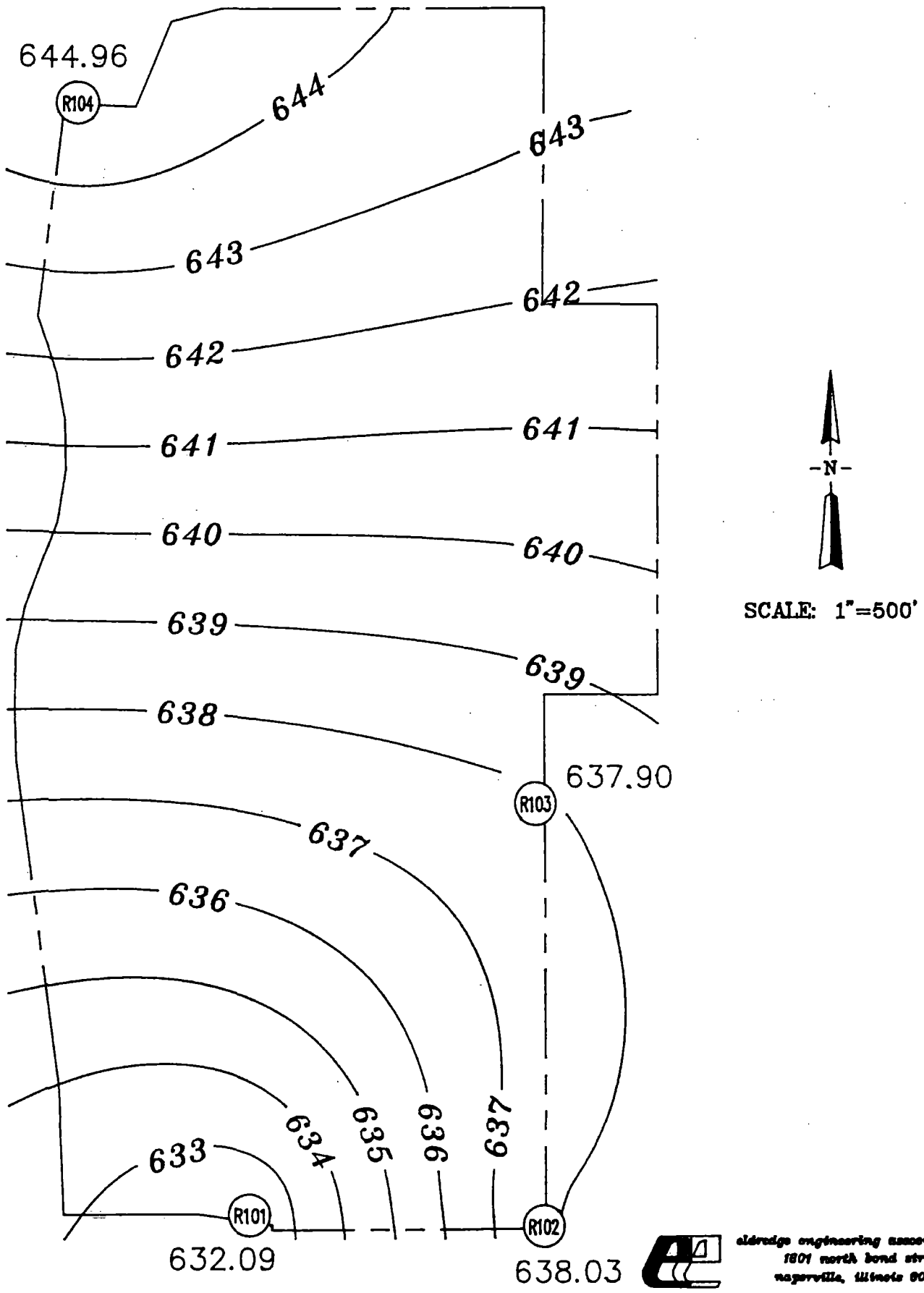

EXHIBIT E-4

Permeabilities of Dolomitic Bedrock

Based on water level measurements performed during well development procedures, the following in-place permeabilities of the dolomite were calculated:

R101	1.8×10^{-4} cm/sec
R102	2.1×10^{-4} cm/sec
R103	No Data
R104	1.3×10^{-5} cm/sec