THE MIAMI CONSERVANCY DISTRICT
38 EAST MONUMENT AVENUE
DAYTON, OHIO 45402
513 223-1271

Board of Directors
ROBERT S. OELMAN
President
WILLIAM H. HOBART, JR.
Vice President
LLOYD GOGGIN

WATER RESPONSIBILITY

RECEIVED DEC 29 1977

December 23, 1977

US EPA RECORDS CENTER REGION 5
469066

Mr. Thomas J. Wittman, President
Systems Technology Corporation
245 North Valley Road
Xenia, OHIO 45385

Re: Groundwater Quality
Systech - Franklin

Dear Mr. Wittman:

Enclosed are tabulations of data from the analyses of groundwater samples obtained November 15, 16 and December 8, 1977, at the new observation wells at Systech, Franklin, Ohio.

The location of each well is shown on the enclosed map. W132 is 54 feet south of the southeast clarifier near Route 73, W133 is on top of the south bank of Clear Creek 9 feet west of the dog pound, and W139 is on the north side of the driveway opposite the gate to the solvent recovery truck dock.

Also enclosed are copies of the station description data sheets, well logs and sketches of the construction details of the well.

Well Development

Wells W133 and W139 were developed using air surge for 2 hours and 3 hours, respectively. Well W132 was developed by alternately pumping water into the well from a fire hydrant and out of the well using 20 gpm and 150 gpm centrifugal pumps. The air surge method was ineffective due to the shallow depth of water in the well. Total development time was about 8 hours.

Sampling Procedure

Samples were obtained using the District's submersible pump. The capacity of the pump is 18 gallons per minute. Each well was pumped continuously for a period of time before samples were obtained. The sample from W132, November 16 was obtained with a 75 gpm centrifugal pump. The pumping times are shown in Table 1 and Table 2.

Field Observations

W132 - After development flow was clear and had no discernable odor
W133 - After development flow was clear and had no discernable odor
W139 - Water foamed during development with compressed air and remained turbid after 3 hours of pumping. A strong chemical odor was observed and the water was found to irritate the skin.

Depths, in feet, to water below land surface (BLS) and elevation above sea level are shown in Table 3.

Very truly yours,

THE WATER CONSERVATION SUBDISTRICT
OF THE MIAMI CONSERVANCY DISTRICT

By: Donald T. Williams
Donald T. Williams
Chief Engineer

Enclosures

cc: Mr. Charles W. Forsthoff

Table 1

Systech Groundwater Analyses

November 29, 1977

Well Number		W132	W133	W139
Date		77-11-16	77-11-15	77-11-15
Time		1538	1425	1327
Pump Rate	GPM	75	18	18
Pumping Time	Minutes	120	30	30
Water Temp.	°C	17	16.5	16
Field Alkalinity	mg/l	234*	395	640
CO_2	mg/l	-	97	314
pH, lab.		7.5	7.4	6.6
Conductivity, lab	µmhos	1231	1179	1928
Turbidity	units	-	1.8	12.1
Hardness	mg/l	342	280	870
Chloride, Cl	mg/l	142	137	176
Sulphate, SO_4	mg/l	22	59.2	
Phosphorus, Total -P	mg/l	.29	.04	.23
Kjeldal Nitrogen	mg/l	1.86	.63	6.2
Ammonia Nitrogen (NH_3-N)	mg/l	1.40	.26	.48
Nitrate+Nitrite (NO_2+NO_3-N)	mg/l	1.16	.02	0.0
Total Solids	mg/l	780	721	1993
Dissolved Solids	mg/l	718	706	1873
Fecal Coliform	#/100ml	<10	<1	<10
Phenol	mg/l	<.002	<.002	<.002
Cyanide	mg/l	.09	.02	.30
MBAS	mg/l	.005	.005	.010
Total Organic Carbon	mg/l	24	7.0	920
BOD_5	mg/l	17	3.4	710
COD Low	mg/l	40	15.9	-
COD High	mg/l	-	-	2560
Calcium, Ca	mg/l	114	104	246
Magnesium, Mg	mg/l	35	37	56
Sodium, Na	mg/l	81	72	52
Potassium, K	mg/l	9.9	8.8	15
Iron, Fe	mg/l	26.800	.250	12.950
Manganese, Mn	mg/l	1.238	.604	3.130
Nickel, Ni	mg/l	.012	.013	.025
Chromium, Cr	mg/l	.022	.015	.008
Zinc, Zn	mg/l	.161	.053	.038
Copper, Cu	mg/l	.009	.009	.009
Cadmium, Cd	mg/l	.006	.007	.009
Mercury, Hg	mg/l	0	0	0
Lead, Pb	mg/l	.014	.009	.021

*Lab

Table 2

SYSTECH GROUNDWATER QUALITY

December 22, 1977

Well Number		W132	W133	W139
Date		12-08-77	12-08-77	12-08-77
Time		1102	1134	1201
Pump Rate, gpm		18	18	18
Pumping Time, Minutes		30	6	6
Water Temperature, °C		13	15.5	15.5
Alkalinity, Field	mg/l	390	415	701
CO_2	mg/l	96	129	273
pH, Field		6.9	6.8	6.7
pH, Lab		7.1	7.3	6.6
Conductivity, Lab	μmhos	1145	1214	1598
Kjeldal Nitrogen	mg/l	1.48	1.32	5.60
Total Solids	mg/l	765	787	1619
Dissolved Solids	mg/l	699	764	1487
TOC	mg/l	13.0	10.0	380
COD, Low	mg/l		3.1	
COD, High	mg/l	48		1808
Cyanide	mg/l	.06	.01	.20
Oil and Grease	mg/l	0	0	0
Well Yield gallons per minute / foot - drawdown		36.0	66.7	21.2

13 - 12

— 5 x 21.2 gpm

Table 3

Well Number	W132		W133		W139	
Elevation of Land Surface	675.05		674.49		669.25	
	Depth (BLS)	Elevation	Depth (BLS)	Elevation	Depth (BLS)	Elevation
Date						
11-14-77	-	-	14.57	659.92	9.41	659.84
11-15-77	-	-	14.55	659.94	9.32	659.93
11-16-77	13.86	660.19	-	-	-	-
12-08-77	12.26	661.79	12.36	662.13	8.16	661.09

THE MIAMI CONSERVANCY DISTRICT
COMPUTATION SHEET

SUBJECT GROUNDWATER DATA

PAGE 1

Sta. NO.

COMPUTED BY PMP DATE 11-17-77 CHECKED BY

Well No. W132 County WARREN Township FRANKLIN Section R5, T.1 Sec. 1
River Mile Tributary Subarea River Basin
Lat Long State Coord. Zone S: x y
Location: 6' east of fence at southeast corner of SYSTECH plant, 54 ft. south of fence, 55 ft. north of north edge of [illegible]

Elevation of MP Elev. Land Surface Land Surface Corr. -2.12 ++
MP Top of 4" PVC casing.
WELL:
Total Depth* 21.22 Depth Cased* 10.92 Drilling Method Cable Bedrock Depth* —
Casing Type 4" PVC Plastic Diameter 4" Screen 10' [illegible] PVC-0.020 slot
Pump Intake Setting* Gravel Pack
Pump Capacity Pump Type HD
Date Drilled 11-8-77 By: [illegible]
Owner: Miami Conservancy District
AQUIFER CHARACTERISTICS:
Material Origin
Permeability gpd/ft² Special Cap. Storage Coeff.
REMARKS: *6' of 6" dia. steel casing fill. Top casing 0.21 above 4" PVC

*Feet below land surface.

Water Level								Well Log		
Date	Time	Tape	Cut	Depth, B.M.P. ft.	Land Surf. Corr		Sea L. Elev. ft.	Depth from ft.	to ft.	Description
								0	10	Fill & rubble
								10	14	yellow clay, sand, and gravel
								14	18	Dark gray, well graded coarse sand cobbles, trace clay
								18	21	gray, medium sand to cobbles, [illegible] silt & clay
								21	32	gray silt, some clay dry [illegible] easy drilling, streaks of [illegible] organic matter & very fine sand
11/14/77	1205	12.95	+0.70	13.55	2.33	21.22		Bottom of well		
	1202	1200	-1.34	16.16	2.33	13.83		Water surface		
11/15	1547	1300	-1.91	16.19	2.33	13.86		"		"

SYSTECH, FRANKLIN, O.

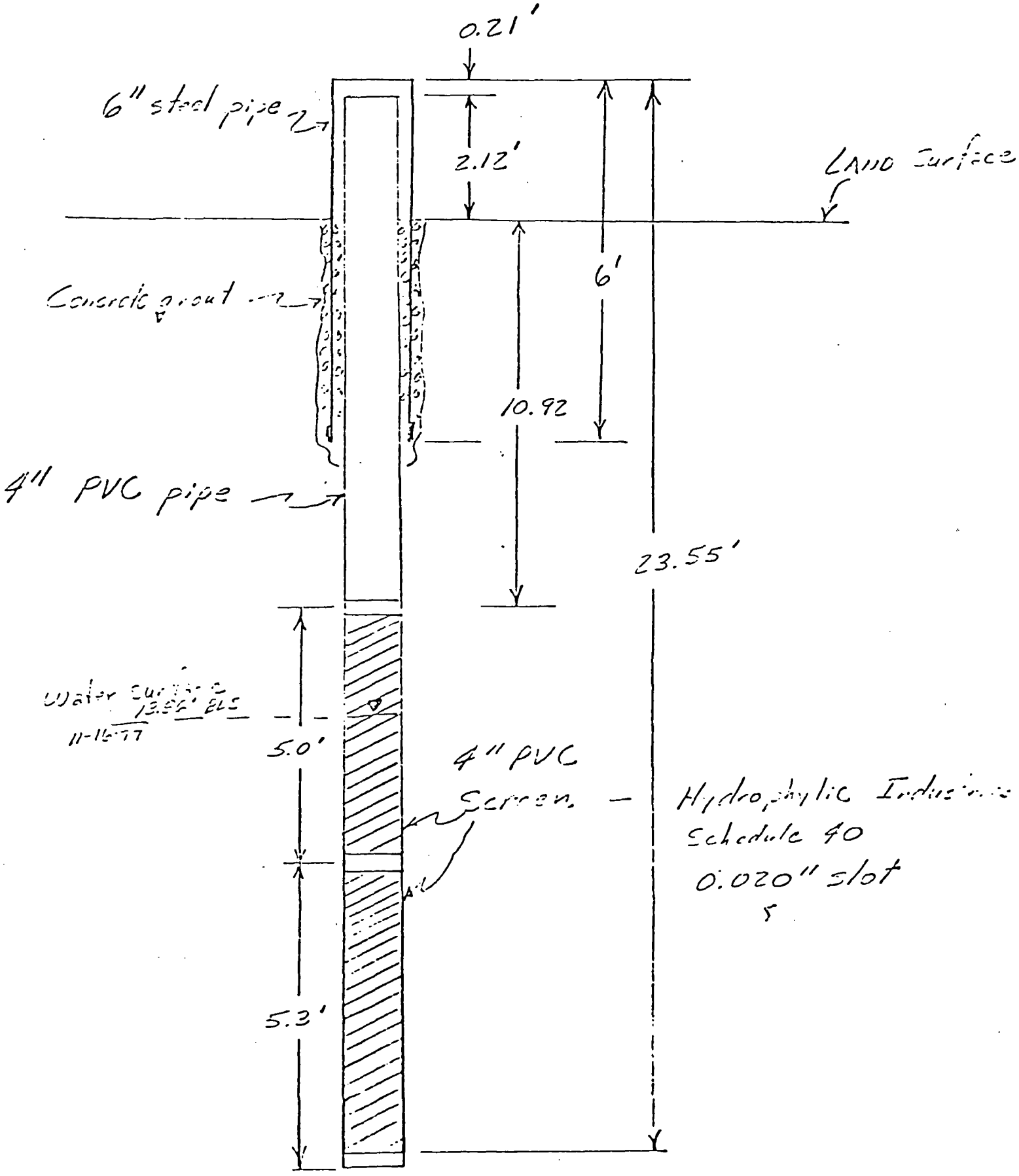

THE MIAMI CONSERVANCY DISTRICT

COMPUTATION SHEET

SUBJECT GROUNDWATER DATA

PAGE 1

Sta. NO.

COORDINATES FRANKLIN

AIR PHOTO 60, 2-14-76

COMPUTED BY _____ DATE _____ CHECKED BY _____

Well No. W133 County WARREN Township FRANKLIN Section R.5, T.1 Sec 1
River Mile _____ Tributary _____ Subarea _____ River Basin _____
Lat _____ Long _____ State Coord. Zone S: x _____ y _____
Location: 9 ft. west of NW. corner of dog pound. 60 ft. south of Clear Creek, 90 ft. NE. of old Franklin STP office At SYSTECH. FRANKLIN OHIO

Elevation of MP _____ Elev. Land Surface _____ Land Surface Corr. -1.93 ft
MP Top 4" PVC Casing
WELL:
Total Depth* 25.10 Depth Cased* 14.3 Drilling Method Cable Bedrock Depth* _____
Casing Type PVC Plastic Diameter 4" Screen 10.3 - 0.020 Slot PVC
Pump Intake Setting* — Gravel Pack _____
Pump Capacity — Pump Type _____ Hp _____
Date Drilled Nov. 9 1977 By: Wm Crane
Owner: Miami Conservancy District
AQUIFER CHARACTERISTICS:
Material _____ Origin _____
Permeability _____ gpd/ft² Special Cap. _____ Storage Coeff. _____
REMARKS: 4 @ 4 ft. 6" dia steel casing left to protect PVC. Top 6" 0.27" slot wire

*Feet below land surface.

Water Level								Well Log		
Date	Time	Tape	Cut	Depth, B.M.P. ft.	Land Surf. Corr	Depth BLS ft.	Sea L. Elev. ft.	Depth from ft.	to ft.	Description
								0	11	Fill & rubble
								11	13	Br. Gravel & cobbles, silt [illegible]
								12	15	Br. Coarse Gravel, cobbles, [illegible] silt seams
								15	18.5	Br. Coarse gravel, cobbles, [illegible] 1" yellow clay seams
								18.5	20	Clean pea gravel, cobbles
								20	24	Clean pea gravel, coarse sand [illegible]
								24	31	gray silty clay, some sand [illegible]
11/9/77	1257	26.50	10.70	27.20	2.10	25.10	Bottom	of well		
		3.00	-1.33	16.57	2.10	14.57	Water	surface		

SYSTECH, FRANKLIN, O.

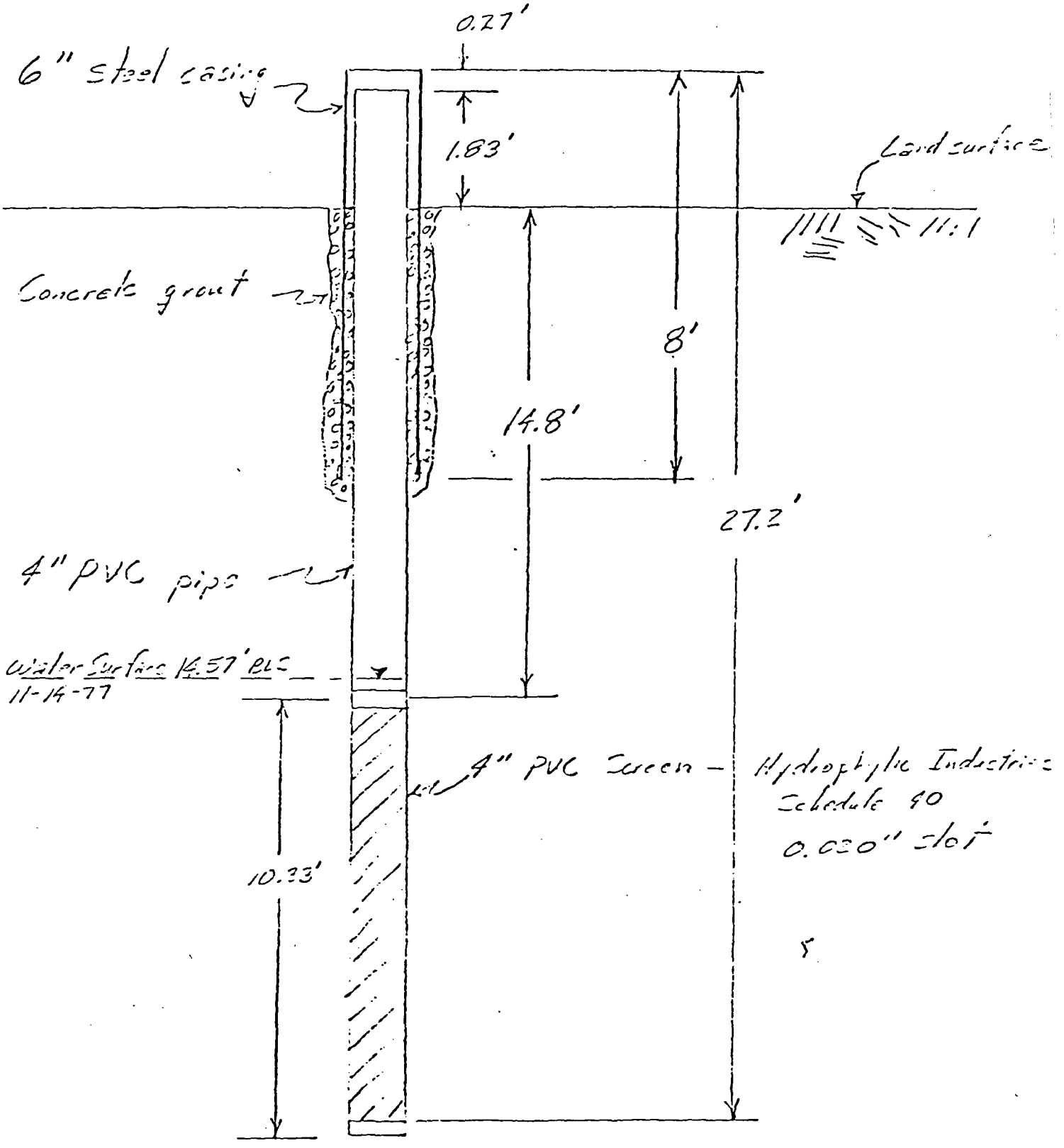

THE MIAMI CONSERVANCY DISTRICT
COMPUTATION SHEET

SUBJECT GROUNDWATER DATA

PAGE 1
Sta. NO.
[illegible] FRANKLIN
[illegible] 60 2-6-76

COMPUTED BY PMP DATE 11-14-77 CHECKED BY

Well No. W139 County WARREN Township FRANKLIN Section 25, T.1 Sect 1
River Mile Tributary Subarea River Basin
Lat Long State Coord. Zone S: x y
Location: 142' West of old FRANKLIN STP along 67 [illegible]
150 ft. east of east edge of Bevan Drive on North side of [illegible]
[illegible] Franklin Dock, Franklin [illegible]

Elevation of MP Elev. Land Surface Land Surface Corr. -3.40
MP Top 4" PVC Casing
WELL: 1
Total Depth* 24.55 Depth Cased* 7.6 Drilling Method Cable Bedrock Depth* —
Casing Type PVC Plastic Diameter 4" Screen 9.9' - 0.020" slot PVC
Pump Intake Setting* Gravel Pack
Pump Capacity Pump Type Hp
Date Drilled Nov 11 1977 By: Wm Cross
Owner: Miami Conservancy District
AQUIFER CHARACTERISTICS:
Material Origin
Permeability gpd/ft² Special Cap. Storage Coeff.
REMARKS: 9 ft. of 4 1/2" slot casing left in original hole.

*Feet below land surface.

Water Level								Well Log		
Date	Time	Tape	Cut	Depth, B.M.P. ft.	Land Surf. Corr.	Depth BLS Ft.	Sea L. Elev. ft.	Depth from ft.	to ft.	Description
								0	5	Road bed fill
								5	8	Brown dirty sand & gravel (Med)
								8	11	Br. Clean sand & gravel Some cobbles
								11	15	Gray fine gravel & cobbles
								15	19.5	Br. Sand & gravel with cobbles
								19.5	26.5	Gray clay with some gravel
11/14/77	1312	27.25	+0.20	27.25	-3.40	24.55		Bottom of well		
11/14		4.00	-1.12	12.31	-3.40	9.41		Water surface		

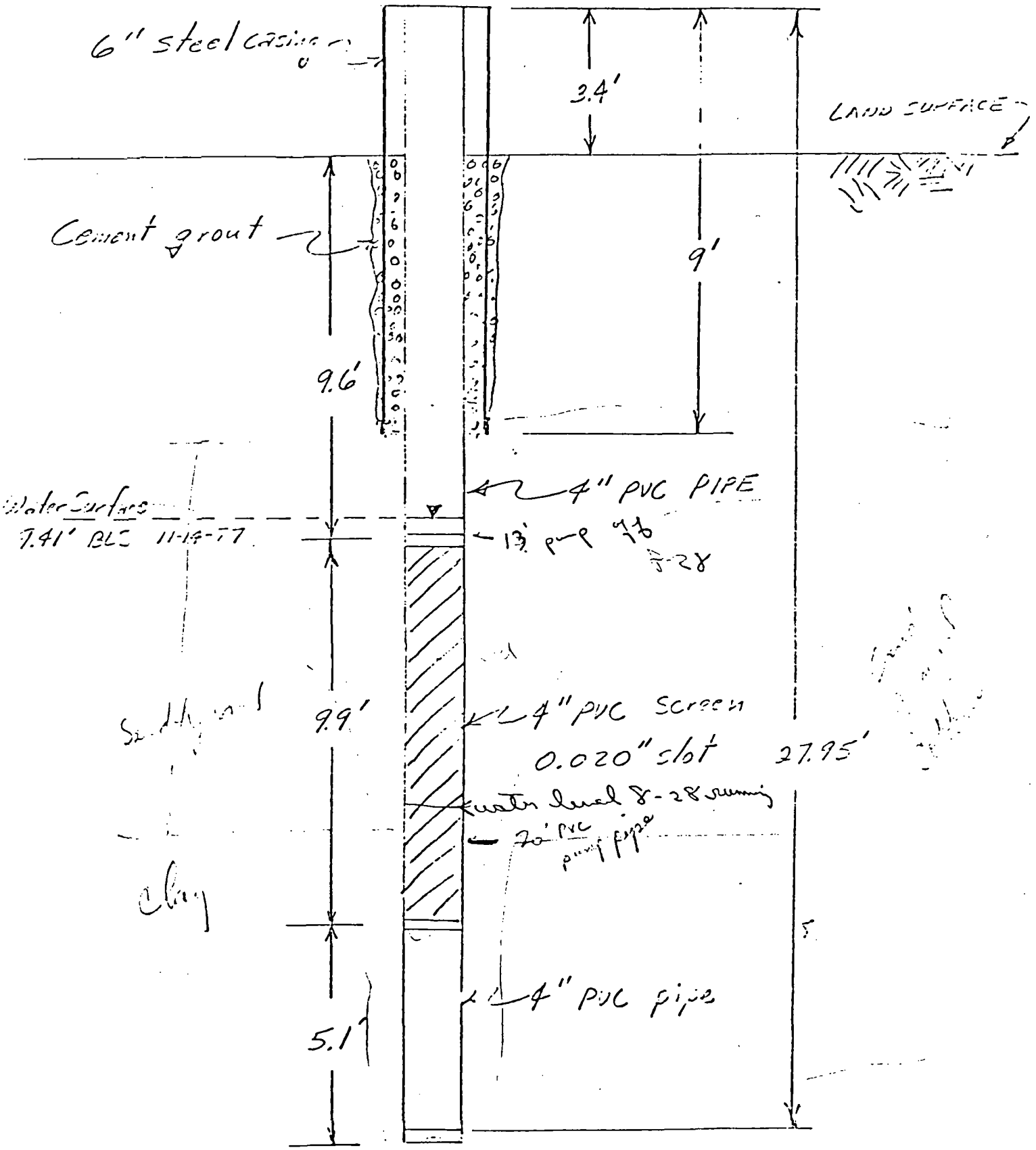
6" steel casing
3.4'
LAND SURFACE
Cement grout
9'
9.6'
4" PVC PIPE
Water Surface
7.41' BLS 11-14-77
13' pump off
8-28
9.9'
4" PVC Screen
0.020" slot
27.95'
water level 8-28 running
70' PVC pump pipe
clay
4" PVC pipe
5.1'

The Miami Conservancy District
Water Conservation Subdistrict

Station Description
Groundwater Observation Well

W 132

Location: Lat. , Long. , R.5, T.1, Sec. 1, Franklin Township, Warren County, Ohio. State Plane Coordinates: X: , Y: , Zone S. 6 feet east of fence at southeast corner of Systech Plant area, 54 feet south, southeast of clarifier, 55 feet north of north edge of State Route 73, FRANKLIN.

Owner: The Miami Conservancy District, 38 East Monument Avenue, Dayton, Ohio 45402, Telephone: (513) 223-1271

History: Well drilled November 8, 1977 by William Crane. Developed by air surge November 16, 1977. Installed to monitor groundwater quality and observe groundwater levels at the Systech Plant, Franklin.

Description: 10.3 feet of 4-inch diameter PVC plastic .020 slot screen 13.04 feet of 4-inch diameter PVC plastic casing. 6 feet of 6-inch diameter steel casing left. Top of casing 0.21 feet above 4-inch PVC casing. Measuring point is top of 4-inch casing. Land surface correction is -2.12. Well grouted with mortar mix between 4-inch and 6-inch casings.

The following are referred to sea level elevations:

Top of 6" steel casing	676.38 feet
Top of 4" PVC casing	676.17 " "
Land surface	674.05 " "
Top of screen	663.13 " "
Bottom of well	652.83 " "

Data: Water quality samples began November 16, 1977.

Remarks: Samples obtained with submersible pump.

Prepared by: M. S. Brown 12-02-77
Revised by:

The Miami Conservancy District
Water Conservation Subdistrict

Station Description
Groundwater Observation Well

W 133

Location: Lat. , Long. , R.5, T.1, Sec. 1, Franklin Township, Warren County, Ohio. State Plane Coordinates: X: , Y: , Zone S. 9 feet west of northwest corner of dog pound, 60 feet south of Clear Creek, 90 feet northeast of old Franklin STP office at Systech, Franklin.

Owner: The Miami Conservancy District, 38 East Monument Avenue, Dayton, Ohio 45402, Telephone: (513) 223-1271

History: Well drilled November 9, 1977 by William Crane. Developed by air surge November 14, 1977. Installed to monitor groundwater quality and observe groundwater levels at the Systech Plant, Franklin.

Description: 10.3 feet of 4-inch diameter PVC plastic .020 slot screen, 16.6 feet of 4-inch diameter PVC plastic casing. 8 feet of 6-inch diameter steel casing left to protect PVC. Top of 6-inch casing is 0.27 feet above top of PVC. Measuring point is top of PVC. Land surface correction is -1.83. Well has been grouted with mortar mix between 4-inch and 6-inch casings.

The following are referred to sea level elevations:

Top of 6" steel casing	676.59 feet
Top of 4" PVC casing	676.32 " "
Land surface	674.49 " "
Top of screen	659.69 " "
Bottom of well	649.39 " "

Data: Water quality samples began November 15, 1977.

Remarks: Samples obtained with submersible pump.

Prepared by: M. S. Brown 12-02-77
Revised by:

The Miami Conservancy District
Water Conservation Subdistrict

Station Description
Groundwater Observation Well

W 139

Location: Lat. , Long. , R.5, T.1, Sec. 1, Franklin Township, Warren County, Ohio. State Plane Coordinates: X: , Y: , Zone S. 142 feet west of old Franklin STP office, 67 feet south of Clear Creek, 150 feet east of east edge of Baxter Drive, on north side of driveway at gate to Systech solvent recovery truck dock, Franklin, Ohio.

Owner: The Miami Conservancy District, 38 East Monument Avenue, Dayton, Ohio 45402, Telephone: (513) 223-1271

History: Well drilled November 10, 1977 by William Crane. Developed by air surge November 14, 1977. Installed to monitor groundwater quality and observe groundwater levels at the Systech Plant, Franklin.

Description: 9.9 feet of 4-inch diameter PVC plastic .020 slot screen, 5.1 feet of 4-inch diameter bank PVC from bottom of well to bottom of screen, 13.0 feet of 4-inch diameter PVC plastic casing from top of screen to top of well. 9 feet of 6-inch diameter steel casing left to protect plastic casing. Measuring point is top of plastic casing. Land surface correction is -3.40 feet. Well has been grouted with mortar mix between 4-inch and 6-inch casings.

The following are referred to sea level elevations:

Top of 4" casing	672.65 feet
Land surface	669.25 " "
Top of screen	659.65 " "
Bottom of screen	649.75 " "
Bottom of well	644.70 " "

Data: Water quality samples began November 15, 1977.

Remarks: Samples obtained with submersible pump.

Prepared by: M. S. Brown 12-13-77
Revised by:

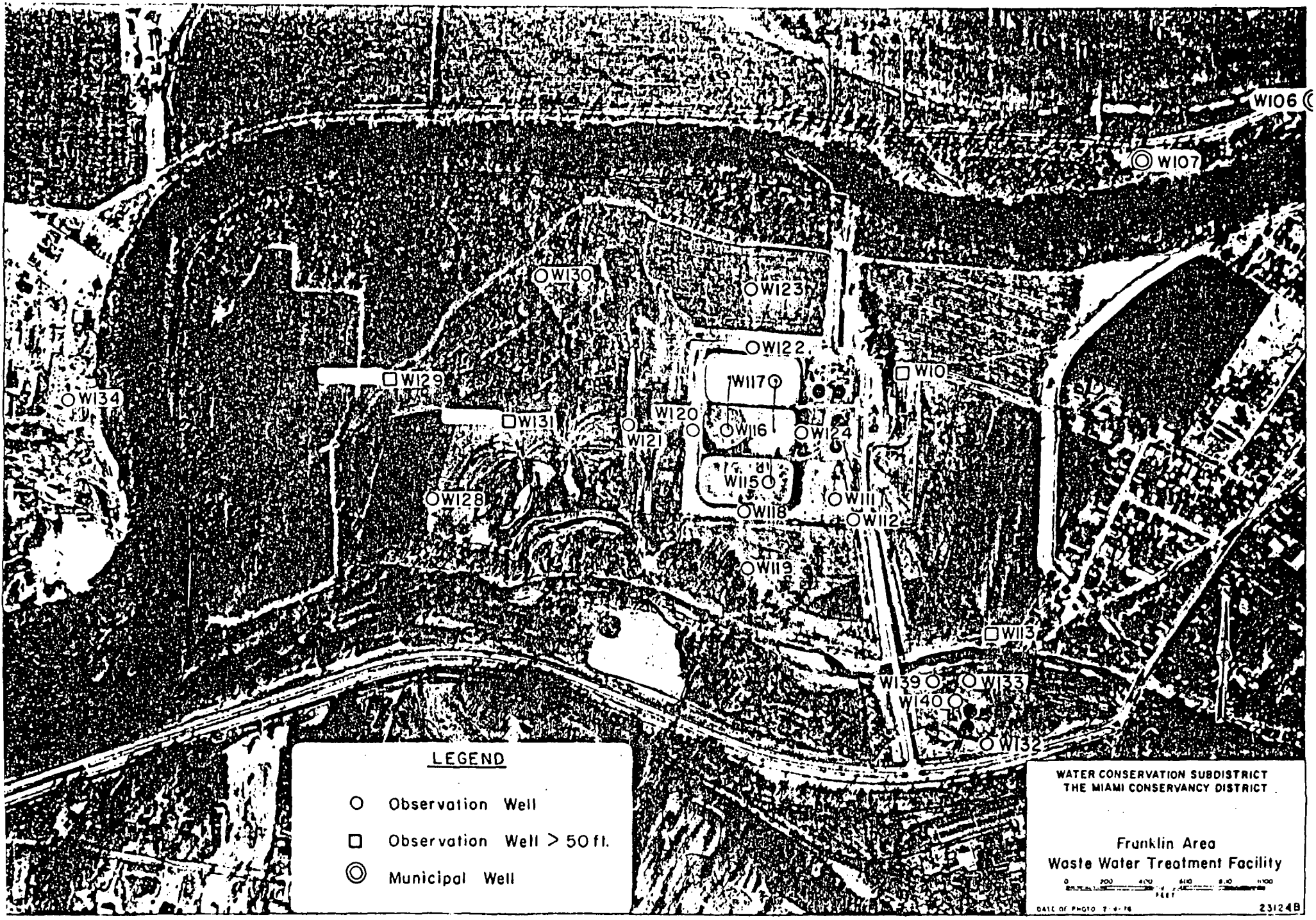
W106
W107
W130
W123
W122
W10
W129
W117
W134
W131
W120
W121
W116
W124
W115
W128
W111
W118
W112
W119
W113
W139
W133
W140
W132
LEGEND
Observation Well
Observation Well > 50 ft.
Municipal Well
WATER CONSERVATION SUBDISTRICT
THE MIAMI CONSERVANCY DISTRICT
Franklin Area
Waste Water Treatment Facility
0 200 400 600 800 1000
FEET
DATE OF PHOTO 7-9-76
23124B

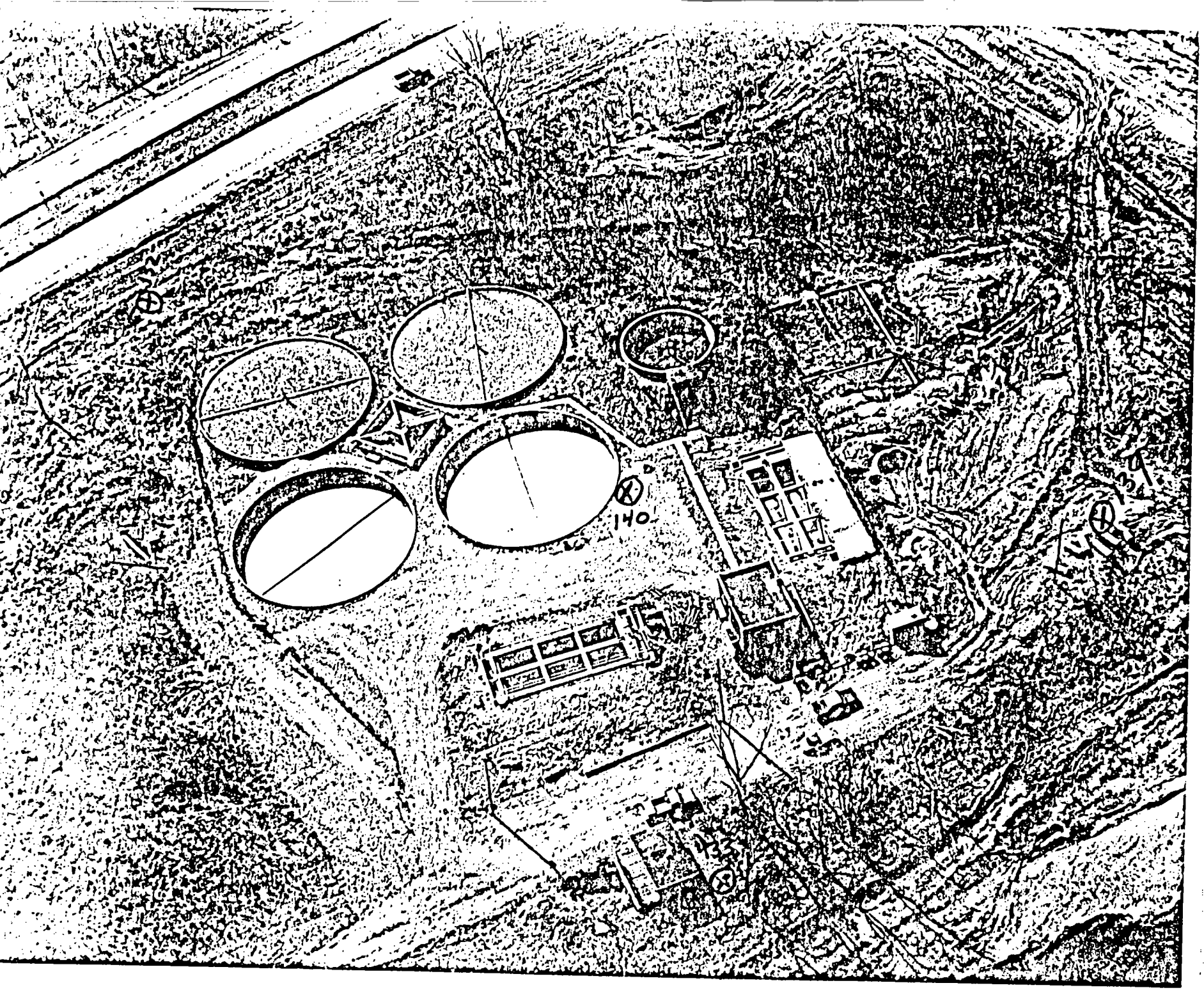
140
133
34