URS

US EPA RECORDS CENTER REGION 5
467820

July 11, 2012

Mr. W. Owen Thompson
Remedial Project Manager
Superfund Remedial Response Section Seven
U.S. EPA Region 5, SR-6J
77 W. Jackson Blvd.
Chicago, IL 60604
Phone (312) 886-4843
Machine Fax (312) 353-8426

Subject: Report for Additional Excavation of DS Tributary and State Road Culvert Restoration
Detrex Source Control Area – Fields Brook Superfund Site
Detrex Corporation, Ashtabula, Ohio
Docket No. V-W-98-C-450

Dear Mr. Thompson:

On behalf of Detrex Corporation (Detrex), URS Corporation (URS) is submitting this report for the additional excavation of sediment/soil from a portion of the DS Tributary west of State Road and sediment removal from within the culvert beneath State Road. This report includes details of the restoration completed within the culvert during December 2011 and March 2012.

BACKGROUND

In November 2009, Detrex performed a limited sediment removal in the area of the DS Tributary immediately west of State Road. As part of this work effort, approximately 47 cubic yards of sediment / soils were removed and disposed of off-site. In April 2011, Detrex was notified by FBAG that a sheen and dense non-aqueous phase liquid (DNAPL) material was observed within the gravel backfill in the same general area. On April 29, 2011, URS and Detrex personnel completed a visual inspection of the DS Tributary downstream of the area where the DNAPL re-appearance was reported, and also upstream. As part of the inspection, URS collected 7 sediment grab samples and 6 surface water grab samples from the DS Tributary east of State Road. Sampling results were reported to USEPA on May 24, 2011.

As a result of the re-appearance of DNAPL in this area, Detrex prepared a Work Plan (submitted to USEPA August 2, 2011) and completed additional excavation of sediment and soils west of State Road. SUNPRO Services of North Canton, Ohio was subcontracted by Detrex to complete the excavation and the related tasks. The excavation activities began October 24, 2011 with backfilling and site grading completed the week of October 31, 2011. Sediment removal from within the culvert beneath State Road was completed beginning December 14, 2011 through December 20, 2011. The attached Photographic Log documents the activities performed as part of these tasks.

URS Corporation
1375 Euclid Avenue
Suite 600
Cleveland, OH 44115
Tel: 216.622.2400
Fax: 216.622.2464
www.urscorp.com

PRE-EXCAVATION PREPARATION

A kick-off meeting was held October 24, 2011, prior to field activities. The meeting outlined the purpose and expected outcome from the Scope of Work, the planned approach, and the various responsibilities.

Field activities began by constructing a water by-pass around the proposed excavation area. Baseline elevations were then collected for the existing top of sediment/soil in the proposed excavation area.

MODIFICATION TO AUGUST 2, 2011 WORK PLAN

In the original work plan for the excavation activities, it was estimated that a maximum of six feet of soil/sediment would be removed (and also excavating beneath culvert). Once excavating began the native soils encountered were very stiff clay. There were no field observations indicating that DNAPL was migrating through this soil or underneath the culvert. Two locations where DNAPL was observed, the DNAPL was observed in sands, silts, and gravels. With the above information a discussion was held (URS, USEPA and Sunpro) and it was agreed that excavating to six feet was not logical, i.e. removing five plus feet of "clean" soils and disposing in a Landfill. It was agreed that if DNAPL was not observed, excavating three feet of soil would accomplish the project goal. Agreement to reducing the excavation depth precluded the need to modify the backfill requirements. The agreed upon backfill sequence was minimum 24-inches of Aquablok® and covered with non-woven geotextile followed by 12-inches or more of Ohio Department of Transportation (ODOT) Type D cement filled rip rap.

In an October 13, 2011, letter report to USEPA a 15-inch diameter drain tile was investigated by URS using a CCTV video camera. This drain tile is located inside the box culvert for the DS Tributary under State Road (NW corner of Detrex property). This drain tile was found to "daylight" in an area fenced and locked and formerly occupied by a Gas Company meter house (see **Figure 1**). Detrex proposed to plug this drain tile as stated in the October 13, 2011 report. This drain tile was plugged during the excavation activities. Plugging procedures are further described below.

EXCAVATION ACTIVITIES

Excavation began on October 25, 2011. The excavation was completed in 3 sections. These sections varied in dimensions depending on the following:

- Original channel width,
- Observation of DNAPL or non-impacted soils,
- The length that could be excavated, left open for observation, and backfilled in the same day (proposed total length 125-feet. West of culvert).

A caterpillar model 324D excavator was used to remove sediment/soil and removal began immediately west of the box culvert beneath State Road. Sediment/soil was transferred from the excavator to a front end loader. The loader then dumped either into a lined roll-off container or at the staging area depending on availability of roll-off containers.

The maximum excavation depth was completed surrounding the culvert, approximately 4.1 feet below the original surface elevation. The remaining excavation depth averaged approximately 3-feet below original grade. The excavation areas were left open for at least two hours for visual observation. If no DNAPL was visually observed after at least 2 hours, the excavation was then backfilled. A total of 269.88 tons of sediment/soil were removed and transported to EQ in Michigan for disposal. Copies of the weight tickets and manifests are on file at Detrex.

DNAPL Observations

In April 2011, Detrex was notified by FBAG that a sheen and DNAPL material was observed within the gravel backfill in the DS Tributary near the culvert crossing under State Road. On April 29, 2011, URS and Detrex personnel completed a visual inspection of the DS Tributary, both upstream and downstream of the area where the DNAPL re-appearance was reported. Two areas were observed with DNAPL. The first area where DNAPL was observed was directly south of the culvert in the gravel and loose sediments. Based on observation during the initial excavation, the in-situ clay beneath these sediments did not contain DNAPL. Over excavating the channel downstream of the culvert removed DNAPL and impacted sediments/soil. The backfill program using Aquablok® was designed to mitigate any future recontamination.

During the previous DS tributary sediment removal (November 2009) two collection trenches were installed perpendicular to the tributary at approximately 15 feet and 65 feet west of the box culvert. The second area DNAPL was observed was in the trench closest to the box culvert, Trench 1. Both collection trenches (Trench 1 and Trench 2) were removed and over excavated to remove DNAPL and backfilled with Aquablok® to mitigate any future recontamination.

Water encountered from these two areas containing DNAPL was collected and processed in Detrex's water treatment system.

Backfill Activities

After the excavation areas were inspected (left open a minimum of two hours) and no indications of DNAPL were found, backfilling was initiated and completed October 27 and 28, 2011. Aquablok® was placed and spread uniformly in the excavation with a minimum thickness of 24-inches and covered with non-woven geotextile with 12-inches or more of ODOT type D cement filled rip rap (see **Figure 2**). The original plan to use compacted clay over the Aquablok® was modified since

DNAPL was not encountered at depth and the excavation limits were not as deep as originally expected.

A replacement collection trench for the two trenches removed during the excavation, was installed perpendicular to the DS Tributary approximately 130-feet downstream from the culvert. This trench was constructed in the same manner as the former two trenches. The collection trench was installed as follows:

1. 18-inches wide
2. 48-inches deep
3. Approximately 15-feet in length
4. Lined with 60 mil geomembrane
5. Backfilled with #57 limestone
6. Sump and riser pipe at one end

DRAIN TILE PLUGGING

A 15-inch diameter drain tile was discovered and investigated previously as described the letter report submitted to USEPA on October 13, 2011. The discharge for this drain tile is located inside the box culvert for the DS tributary underneath State Road (see **Figure 1**). SUNPRO personnel plugged the discharge end of the 15-inch drain tile using a wood form with concrete and finished with spray foam and an epoxy coating November 4, 2011. The other end of this drain tile "day lighted" inside a fenced area that formerly was occupied by a gas meter house. A four-inch diameter PVC pipe (tremie pipe) was assembled and inserted into this drain tile. Flowable cement grout (same as used on the rip rap in tributary) was pumped through the PVC to the turning point of the 15-inch drain tile. Two cubic yards were pumped through the PVC tremie pipe. While patching the discharge end of the 15-inch drain tile within the box culvert, a scoured area was observed beneath the drain tile. SUNPRO personnel filled the scoured area with Aquablok® and capped the area with concrete. The concrete cap was sealed to protect the concrete from water.

CULVERT RESTORATION - DECEMBER 2011

Subsequent to the removal of soil/sediment from the DS Tributary, evidence of additional DNAPL was discovered. Further investigation determined that soil/sediment located within the culvert beneath State Road was impacted with DNAPL. Removal of soil/sediment from the culvert began December 14, 2011 and was completed December 18, 2011.

SUNPRO Services of North Canton, Ohio was subcontracted by Detrex to complete the restoration activities related with the culvert. Culvert restoration activities began by constructing a water by-pass around the culvert

.

The culvert begins on the east side of State road as a 60-inch diameter reinforced concrete pipe. The concrete pipes are 5-feet sections and extend for 85 feet. The culvert pipe connects to a rectangle culvert constructed of concrete (poured-in-place) with a section (25 feet) of sandstone blocks.

Soil/Sediment in the culverts was removed manually with picks and shovels, placed in 5-gallon buckets and transferred into a lined "roll-off" container for off-site disposal. Once the soil/sediment was removed the floor surface was washed and inspected for integrity. The floor surface of the 60-inch pipe was eroded (see attached photo log). The floor of the rectangle culvert was mostly solid except for one area (from 110 feet to 130 feet west of the eastern beginning) where concrete was very thin to absent completely.

No fill was used beneath the concrete for restoration of the 60-inch pipe. The area described above in the rectangle culvert where the floor was eroded, Aquablok® was used as fill material beneath the concrete. ODOT specifications for concrete repair of culverts were followed. Four to six inches of concrete was poured and finished in the entire length of the culvert (both round and rectangle).

Following culvert restoration, the area of the DS tributary previously restored (October 2011) was re-cleaned to ensure no residual DNAPL was present. This re-cleaning was completed using pressure washers and vacuums.

CULVERT RESTORATION – FEBRUARY-MARCH 2012

During routine follow-up inspection of the DS Tributary and the culvert it was discovered that DNAPL was still being released. A water by-pass around the culvert was constructed and inspection of the culvert was completed by URS, Detrex and SunPro. It was determined that DNAPL was seeping within the culvert. The seep was at an area where the floor intersected the south wall of the culvert. This area of the culvert was constructed of sandstone blocks (probably original State Road crossing) and extended with concrete (See Photo 22).

The mortar joints of the sandstone were repaired and additional concrete was poured within the rectangle portion of the culvert. An additional 10-inches of concrete was poured on March 2, 2012. The new concrete was formed to cover the original contact of the floor and the wall.

Following culvert restoration, the area of the DS Tributary was re-cleaned to ensure no residual DNAPL was present. This re-cleaning was completed using pressure washers and vacuums. Impacted sediment was removed and taken offsite for disposal. Impacted water was collected and processed in Detrex's water treatment system.

PRE AND POST SAMPLING OF SEDIMENT STAGING AREA

A sediment/soil staging area was constructed by placing visqueen and a 60 mil. HDPE geomembrane liner on the ground surface. Prior to the construction of this area two surface soil samples were collected and submitted for analysis. At completion of the excavating activities the stockpile liner was removed and two post staging samples were collected and submitted for analysis. The detected chemicals are included in the table below:

Parameter	Units	CRGs for EU-5	DST-SP-1:102511 10/25/2011	DST-SP-2:102511 10/25/2011	DST-SP-1:110311 11/3/2011	DST-SP-2:110311 11/3/2011
1,1,2,2-Tetrachloroethane	mg/kg	102	0.0049 U	0.0048 U	**0.0749**	0.0098 U
Tetrachloroethene	mg/kg	392	0.0049 U	0.0048 U	**0.0138**	0.0098 U
Trichloroethene	mg/kg	1854	0.0049 U	0.0048 U	**0.0191**	**0.0108**

Notes: **Bold** = Analyte detected above reporting limit
U = The analyte was analyzed for, but was not detected. Value shown is the sample reporting limit.

After culvert restoration was completed, SunPro graded and removed additional material in the stockpile area. A second set of samples were collected on December 20, 2011 and two compounds were still detected. Historical use of this area is uncertain and may be residuals from previous activities.

Parameter	Units	CRGs for EU-5	DST-SP-3R:122011 12/20/2011	DST-SP-4R:122011 12/20/2011
Toluene	mg/kg		**0.00901**	**0.0108**
Trichloroethene	mg/kg	1854	**0.0508**	**0.0445**

Notes: **Bold** = Analyte detected above reporting limit
U = The analyte was analyzed for, but was not detected. Value shown is the sample reporting limit.

SITE RESTORATION

At the completion of sediment/soil excavation, grading was performed to remove rutting caused by moving equipment. Erosion control was also completed using straw waddles and hydro seeding areas barren of vegetation.

If you have any questions regarding this submittal, please do not hesitate to contact me at 216-622-2432 at your convenience.

Sincerely,

URS Corporation - Ohio

Martin L. Schmidt

Martin L. Schmidt, Ph.D.
Vice President

Enclosure

cc: R. Currie – Detrex Corporation
T. Steib – Detrex Corporation
T. Doll - Detrex Corporation
R. Williams – Ohio EPA
W. Earle - SulTRAC

URS

PHOTOGRAPHIC LOG

Client Name:	Site Location:	Project No.
Detrex Corporation	Ashtabula, Ohio	13814865

Photo No.	Date:
1	10-25-2011

Description:

Looking west at DS tributary prior to excavating

Photo No.	Date:
2	10-25-2011

Description:

Looking west at DS tributary excavator in place to begin excavating

URS

PHOTOGRAPHIC LOG

Client Name:	Site Location:	Project No.
Detrex Corporation	Ashtabula, Ohio	13814865

Photo No.	Date:
3	10-25-2011

Description:

Excavation completed surrounding culvert

Photo No.	Date:
4	10-25-2011

Description:

Placement of Aquablok®

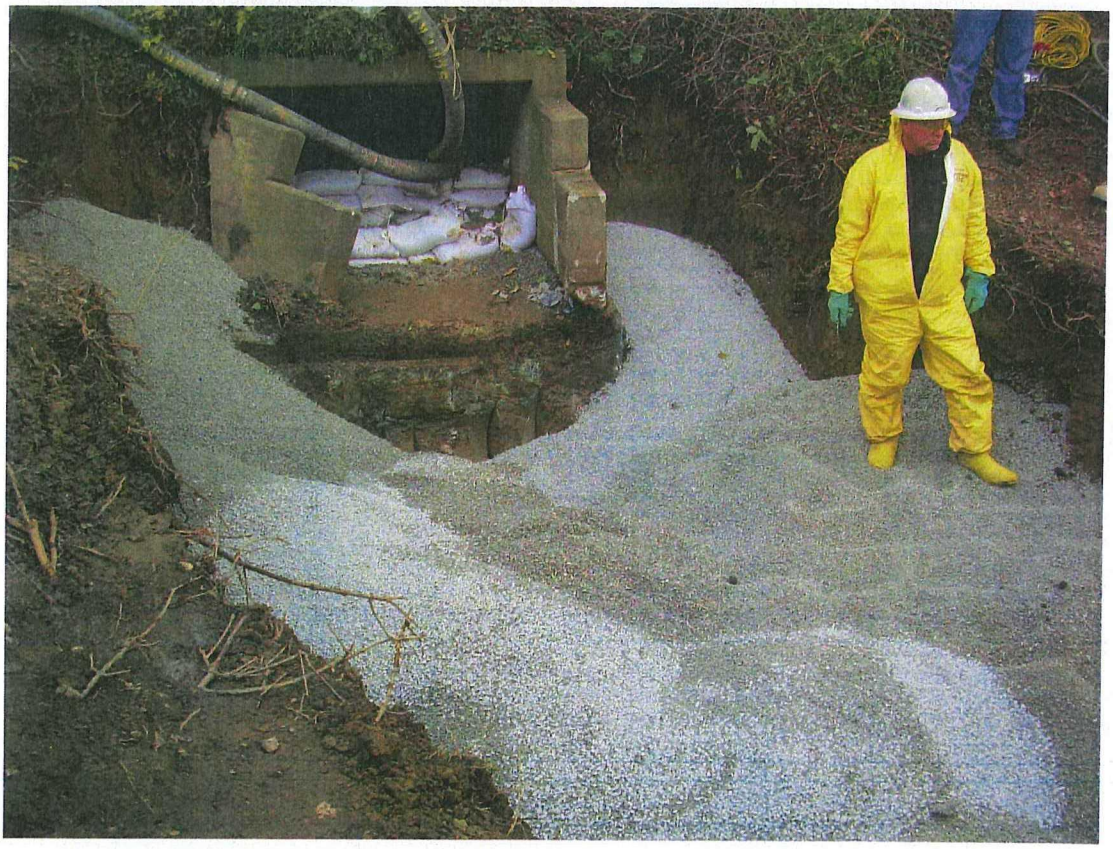

URS

PHOTOGRAPHIC LOG

Client Name:	Site Location:	Project No.
Detrex Corporation	Ashtabula, Ohio	13814865

Photo No.	Date:
5	10-25-2011

Description:

Looking west excavating continuing

Photo No.	Date:
6	10-25-2011

Description:

Looking west excavating continuing

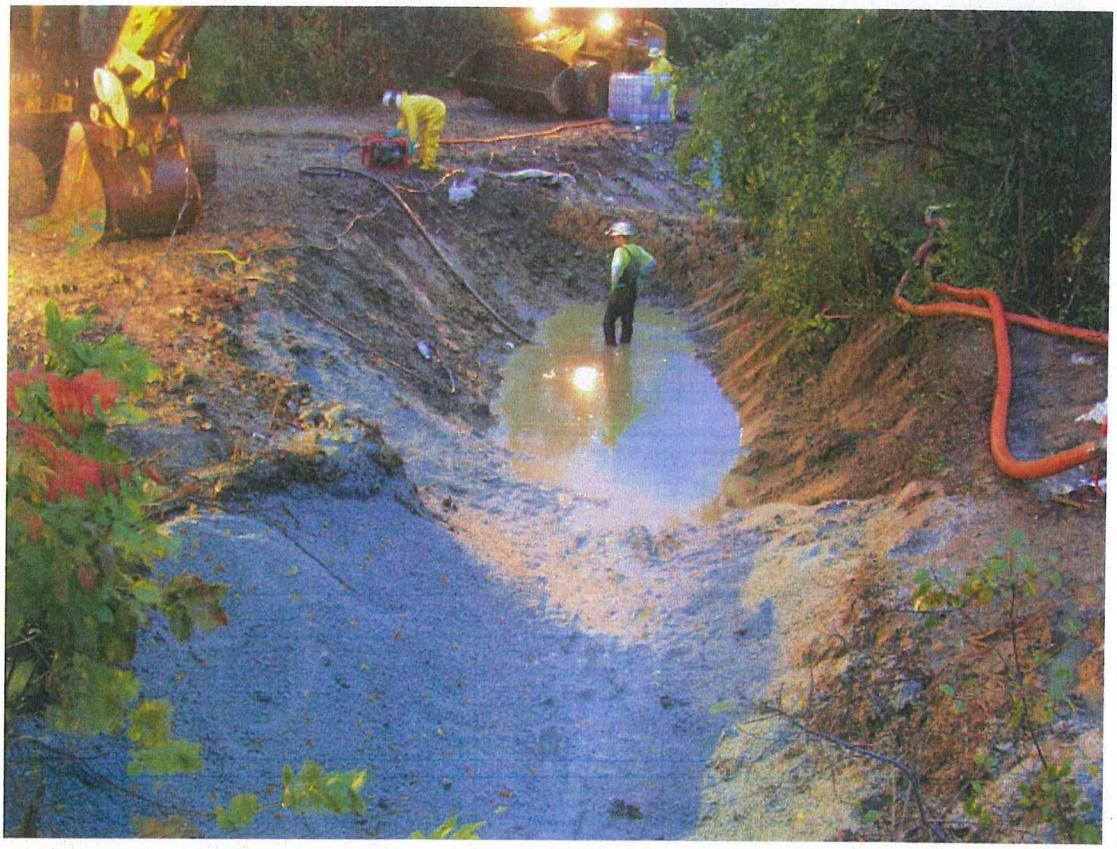

URS

PHOTOGRAPHIC LOG

Client Name:	Site Location:	Project No.
Detrex Corporation	Ashtabula, Ohio	13814865

Photo No.	Date:
7	10-26-2011

Description:

Looking west excavating continuing. (standpipe is 2nd collection trench located 65' west of culvert.

Photo No.	Date:
8	10-26-2011

Description:

Looking west excavation near target length

URS

PHOTOGRAPHIC LOG

Client Name:	Site Location:	Project No.
Detrex Corporation	Ashtabula, Ohio	13814865

Photo No.	Date:
9	10-27-2011

Description:

Excavation completed, Aquablok® placed, covering with non-woven geosynthetic.

Photo No.	Date:
10	10-27-2011

Description:

Non-woven in place

URS

PHOTOGRAPHIC LOG

Client Name:	Site Location:	Project No.
Detrex Corporation	Ashtabula, Ohio	13814865

Photo No.	Date:
11	10-27-2011

Description:

Placing rip rap over Aquablok® and non-woven geosynthetic.

Photo No.	Date:
12	10-27-2011

Description:

Placing flowable fill on rip rap.

URS

PHOTOGRAPHIC LOG

Client Name:	Site Location:	Project No.
Detrex Corporation	Ashtabula, Ohio	13814865

Photo No.	Date:
13	11-03-2011

Description:

Flowable fill on rip rap covered with plastic to aid curing

Photo No.	Date:
14	11-01-2011

Description:

Drain tile to be plugged

URS

PHOTOGRAPHIC LOG

Client Name:	Site Location:	Project No.
Detrex Corporation	Ashtabula, Ohio	13814865

Photo No.	Date:
15	11-04-2011

Description:

Drain tile plugged and coated with epoxy

Photo No.	Date:
16	12-01-2011

Description:

Concrete over drain tile and sealed.

URS

PHOTOGRAPHIC LOG

Client Name:	Site Location:	Project No.
Detrex Corporation	Ashtabula, Ohio	13814865

Photo No.	Date:
17	12-15-2011

Description:

60-inch culvert after cleaning. Note how bottom is eroded to metal "rebar"

Photo No.	Date:
18	12-16-2011

Description:

Box culvert during cleaning. Area shown as discussed in text where floor was in poor condition.

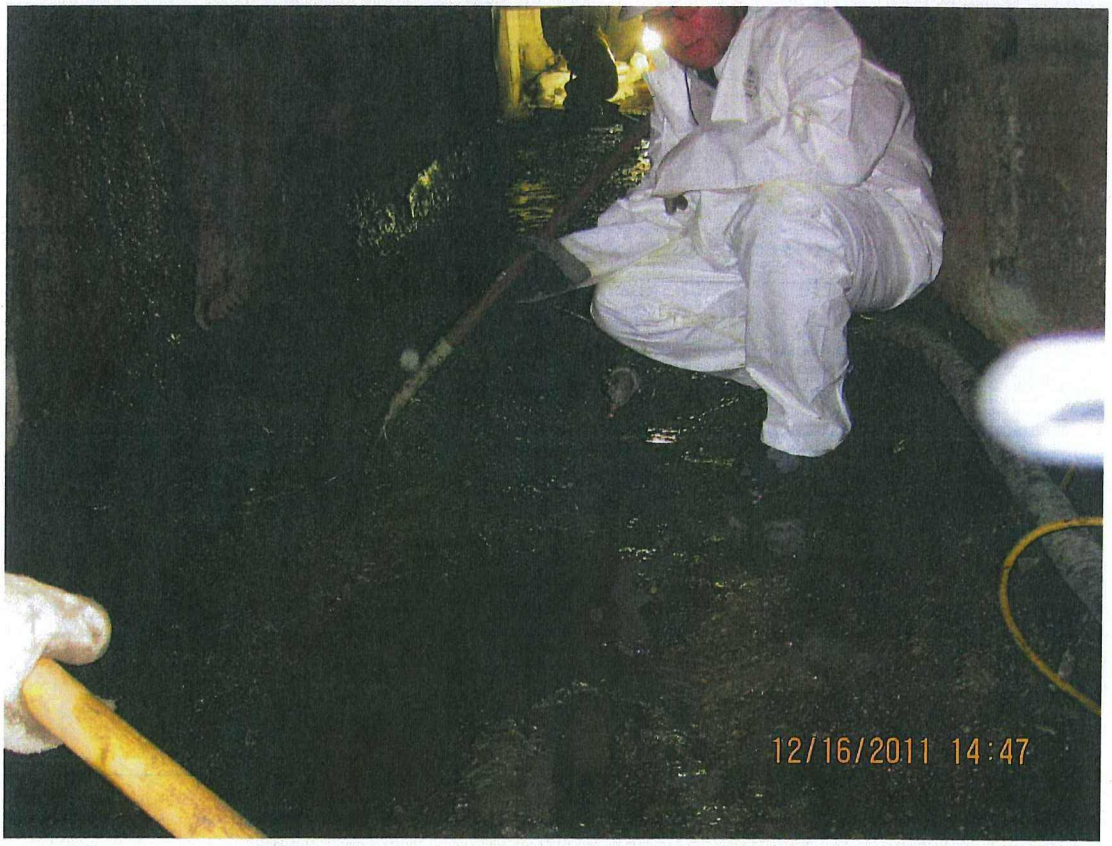

URS

PHOTOGRAPHIC LOG

Client Name:	Site Location:	Project No.
Detrex Corporation	Ashtabula, Ohio	13814865

Photo No.	Date:
19	12-17-2011

Description:

60-inch culvert after concrete poured.

Photo No.	Date:
20	12-16-2011

Description:
Box culvert after concrete poured.

URS

PHOTOGRAPHIC LOG

Client Name:	Site Location:	Project No.
Detrex Corporation	Ashtabula, Ohio	13814865

Photo No.	Date:
21	12-18-2011

Description:
Re-cleaning DS Tributary after culvert restoration.

URS

PHOTOGRAPHIC LOG

Client Name:	Site Location:	Project No.
Detrex Corporation	Ashtabula, Ohio	13814865

Photo No.	Date:
22	03-01-2012

Description:

Inside box culvert looking west showing Sandstone block walls

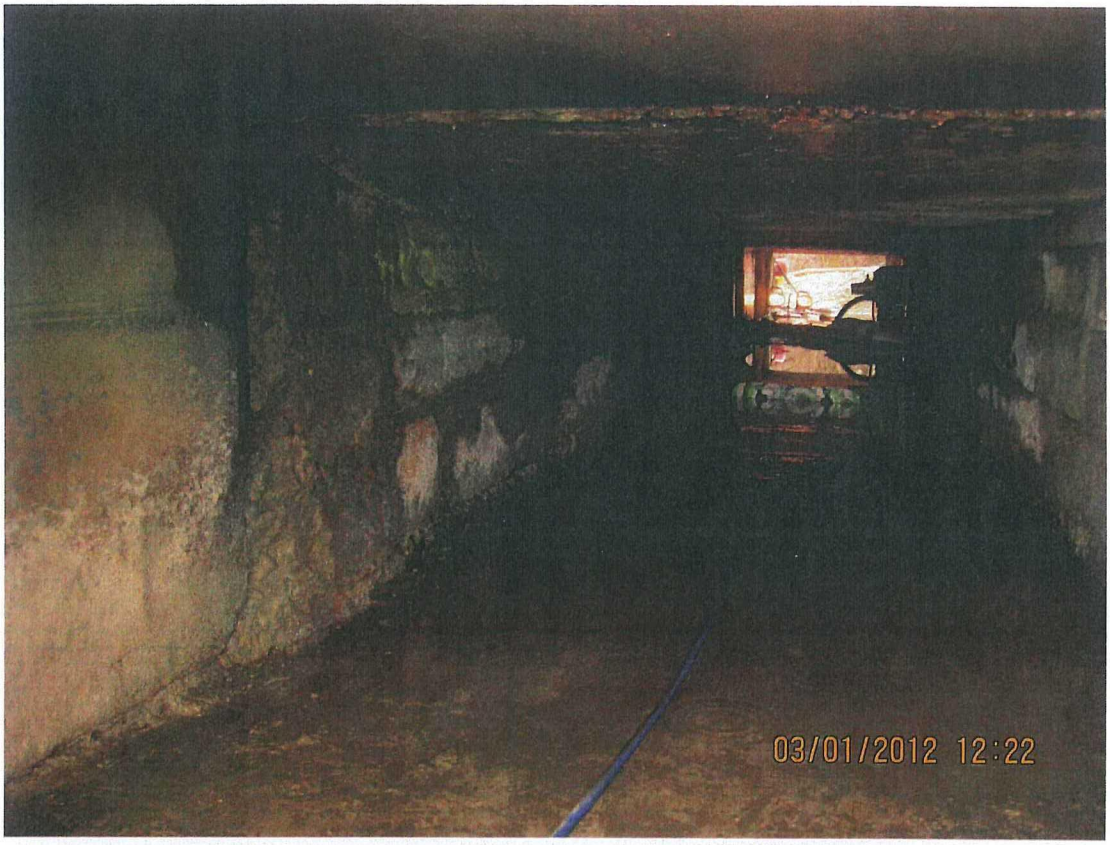

Photo No.	Date:
23	03-01-2012

Description:

Sandstone block repair of mortar joints

URS

PHOTOGRAPHIC LOG

Client Name:	Site Location:	Project No.
Detrex Corporation	Ashtabula, Ohio	13814865

Photo No.	Date:
24	03-02-2012

Description:

Second pour on concrete floor (~10-inch). Note concrete up sidewalls to cover original contact.

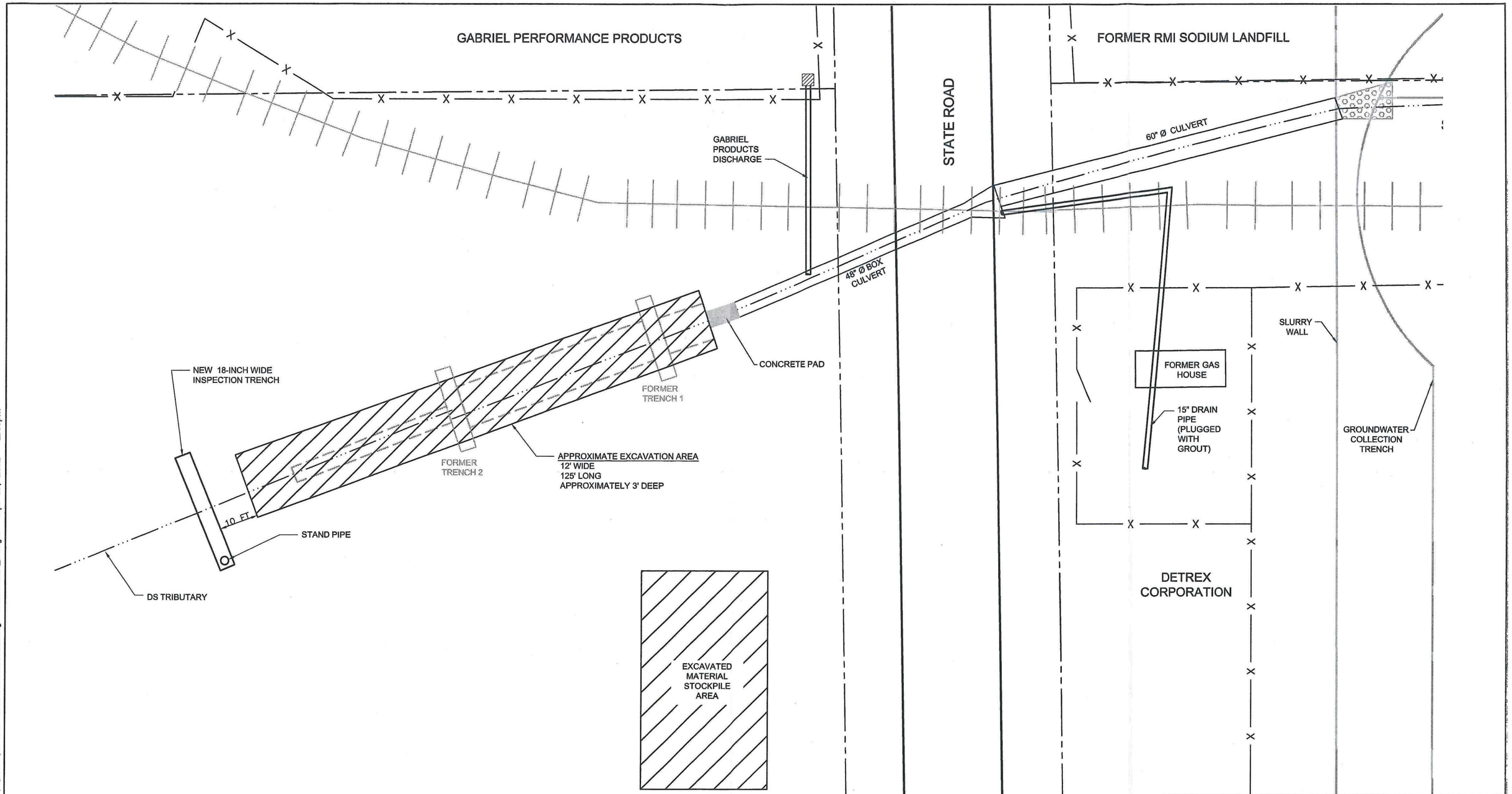

LEGEND

- RAILROAD TRACKS
- PROPERTY BOUNDARIES
- INSPECTION TRENCH (2011)
- LIMITED EXCAVATION AREA (2009)
- EXCAVATED AREA (2011)
- FORMER INSPECTION TRENCHES (2009)

NOTE:

1. TRENCH 1 & 2 WERE REMOVED AS PART OF EXCAVATION ACTIVITIES
2. SEE FIGURE 2 FOR EXCAVATION DETAILS
3. NEW INSPECTION TRENCH PLACED 10 FT DOWN-GRADIENT OF EXCAVATION

0 15
SCALE 1" = 15'

URS

DETREX CORPORATION
ASHTABULA, OHIO

DS TRIBUTARY REMEDIATION

DRAWN BY:	CHECKED BY:	PROJECT No:	DATE:	FIGURE No:
AMH	WEC	13814613	12/19/11	1

K:\Projects\D\Detrex\13814810\DWGs\Figures\DS Trib West Remediation.dwg User:anton_heitger Apr 05, 2012 – 2:15pm

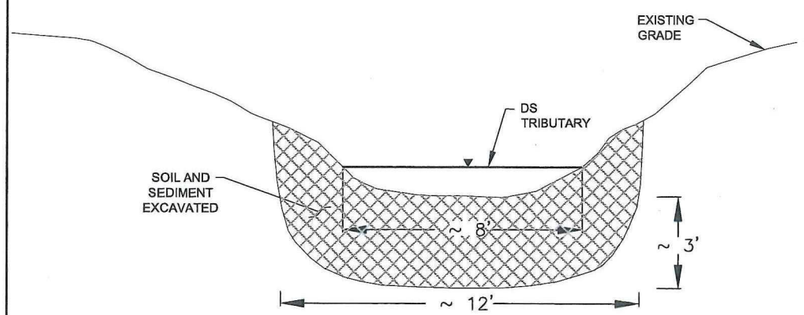

DETAIL 1:
EXCAVATION LIMITS

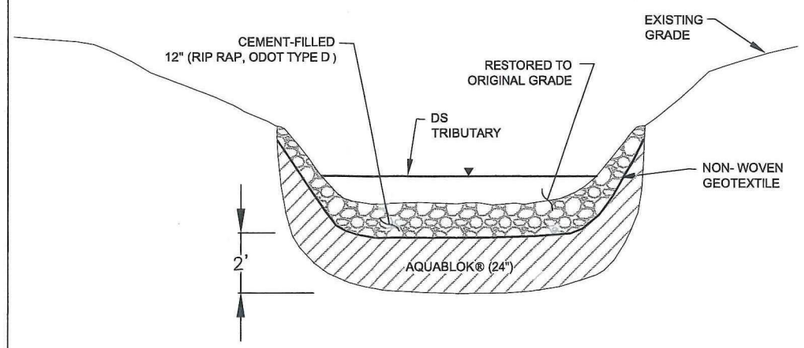

DETAIL 2:
POST EXCAVATION RESTORATION

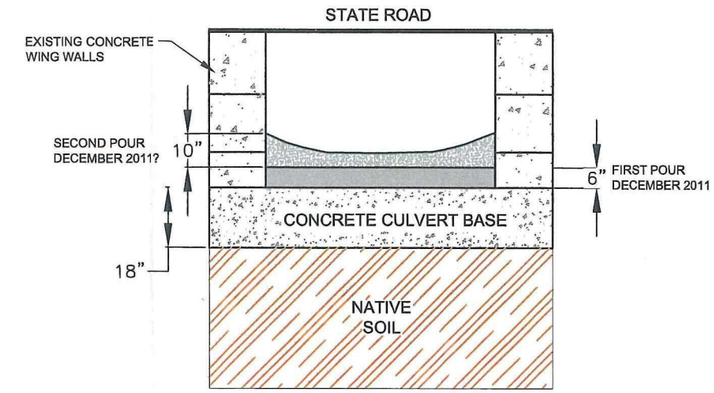

DETAIL 3:
BOX CULVERT CONCRETE BACKFILL

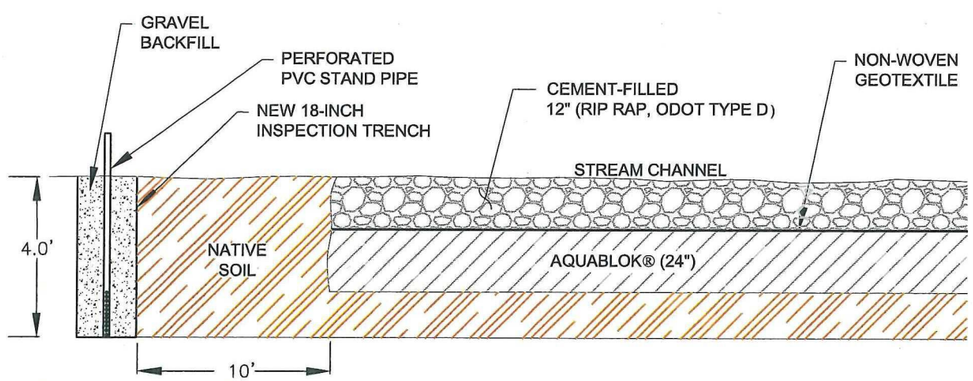

DETAIL 4:
NEW INSPECTION TRENCH

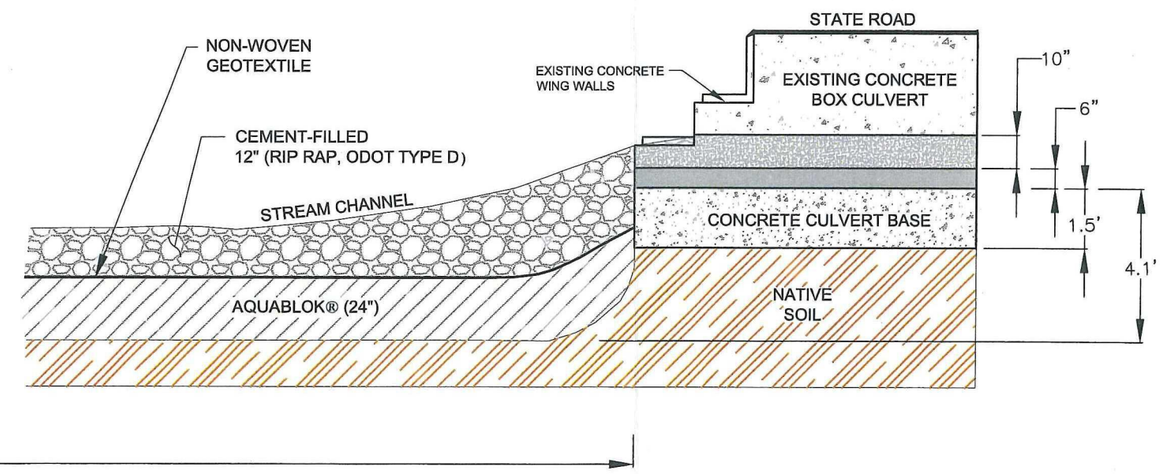

DETAIL 5:
RESTORATION AT THE CULVERT

SCALE AS SHOWN

URS

DETREX CORPORATION
ASHTABULA, OHIO

DS TRIBUTARY REMEDIATION EXCAVATION DETAILS

DRAWN BY:	CHECKED BY:	PROJECT No:	DATE:	FIGURE No:
AMH	WEC	13814613	4/5/12	2

K:\Projects\D\Detrex\13814810\DWGs\Figures\DS Trib XS view post excavation 2012.dwg User: anton_heitger Apr 05, 2012 - 5:22pm