3PF00000107
6

The Goodyear Tire & Rubber Company

METAL PRODUCTS DIVISION

AKRON, OHIO 44316-0001

May 12, 1986

US EPA RECORDS CENTER REGION 5
460185

Mr R Vijayvargiya
Bureau of Public Utilities
65 S High Street
Akron, Ohio 44308

RE: METAL FINISHING COMPLIANCE STATUS REPORT;
GOODYEAR METAL PRODUCTS DIV., AKRON, OHIO

Dear Mr Vijayvargiya:

The Metal Products Division, a facility of the Goodyear Tire and Rubber Company located in Akron, Ohio, is hereby submitting the required analytical report documenting the status of our wastewater discharge in relation to the Metal Finishing Pretreatment Limitations.

The report demonstrates our compliance with the Metal Finishing Pretreatment standards.

Sincerely,

A. J. Dakoski

A J Dakoski
Plant Manager
Metal Products Division

jv

cc: Mr. B Tin
Manager
Public Wastewater Section
Ohio EPA
361 E. Broad St.
Columbus, Ohio 43216-1049

RECEIVED
MAY 20 1986
PUBLIC WASTEWATER

Architects
Planners

Suite 16
Ann Arbor
Michigan 48104
313 973-0700

The Chester Engineers

Ref. No. 3283-22/93

May 9, ~~1896~~ 1986

Mr. Henry Winkler
Goodyear Tire & Rubber Company
Metal Products Division
1144 East Market Street
Department 315-C
Akron, OH 44316

Dear Mr. Winkler:

Re: Metal Finishing Compliance Status Monitoring and Analysis Program; Metal Products Plant

Enclosed are the complete analytical results, the plant process flow diagram, and tables comparing the analytical results with the regulatory criteria. This survey was conducted during the period of April 1-5, 1986.

All samples were collected by Chester personnel from the two process wastewater outfalls to the municipal sanitary sewer system. The samples collected at the Archwood Avenue Sanitary Sewer Outfall were collected at a point upstream of mixing with any "dilution" (i.e., sanitary, non-contact cooling waters, etc.) wastewater sources. The samples collected at the Seiberling Street Sanitary Sewer Outfall were collected at a point downstream of mixing with "dilution" wastewater sources. The samples for all parameters except oil and grease (Freon Extractables) and total toxic organics were collected on an hourly basis (over a 24-hour period) with an automatic sampler. The individual hourly samples were then composited on a flow proportioned basis. The samples for oil and grease and total toxic organics were made up of eight equal volume grab samples collected over a 24-hour period each day. All samples were preserved and analyzed in accordance with the latest procedures approved by the U.S. EPA.

As shown on the attached tables which compare each outfall's analytical results with the regulatory criteria, the plants two process wastewater discharges to the municipal sanitary sewers comply with the Metal Finishing Pretreatment Limitations. It is interesting to note that your plant is in compliance in spite of the city water supply having an average concentration of zinc of 1.3 mg/L, see attached results.

If you have any questions or comments concerning the analytical results please do not hesitate to contact me.

Very truly yours,

Vincent L. Peters

Vincent L. Peters
Staff Process Engineer
Midwest Regional Office

VLP:cms

CC; J. M. Smerglia

GOODYEAR TIRE & RUBBER COMPANY
METAL PRODUCTS DIVISION

COMPARISON OF SEIBERLING STREET OUTFALL
EFFLUENT QUALITY
WITH REGULATORY CRITERIA

Constituent	Seiberling Street Sanitary Sewer		Calculated Metal Finishing Guideline Limitations[1]	
	4 Day Max	4 Day Avg	1 Day Max	Monthly Avg
Total Cyanide, mg/L CN	0.023	0.02	1.18	0.64
Cadmium, mg/L Cd	<0.01	<0.01	0.68	0.26
Total Chromium, mg/L Cr	0.04	0.04	2.73	1.68
Copper, mg/L Cu	0.06	0.04	3.33	2.04
Lead, mg/L Pb	0.01	0.01	0.68	0.42
Nickel, mg/L Ni	0.07	0.06	3.92	2.34
Silver, mg/L Ag	<0.01	<0.01	0.42	0.24
Zinc, mg/L Zn	0.37	0.26	2.57	1.46
Total Toxic Organicx, mg/L	<0.01	<0.01	2.10	--

[1]Calculated Guideline Limitations are based upon a factor of 0.984 of the Guideline Limitation Number. This was obtained by the use of the combined wastewater formula (Attachment III) and from flow sampling data which indicated a total flow at the sampling location of 480,960 gpd of which 473,440 gpd was process wastewater.

GOODYEAR TIRE & RUBBER COMPANY
METAL PRODUCTS DIVISION

COMPARISON OF ARCHWOOD AVENUE OUTFALL EFFLUENT QUALITY
WITH REGULATORY CRITERIA

Constituent	Archwood Avenue Sanitary Sewer		Metal Finishing Pretreatment Standards	
	4 Day Max	4 Day Avg	1 Day Max	Monthly Avg
Total Cyanide, mg/L CN	<0.005	<0.005	1.20	0.65
Cadmium, mg/L Cd	<0.01	<0.01	0.69	0.26
Total Chromium, mg/L Cr	0.02	0.01	2.77	1.71
Copper, mg/L Cu	0.02	0.01	3.38	2.07
Lead, mg/L Pb	0.04	0.02	0.69	0.43
Nickel, mg/L Ni	0.01	<0.01	3.98	2.38
Silver, mg/L Ag	<0.01	<0.01	0.43	0.24
Zinc, mg/L Zn	0.42	0.30	2.61	1.48
Total Toxic Organics, mg/L	0.03	0.01	2.13	—

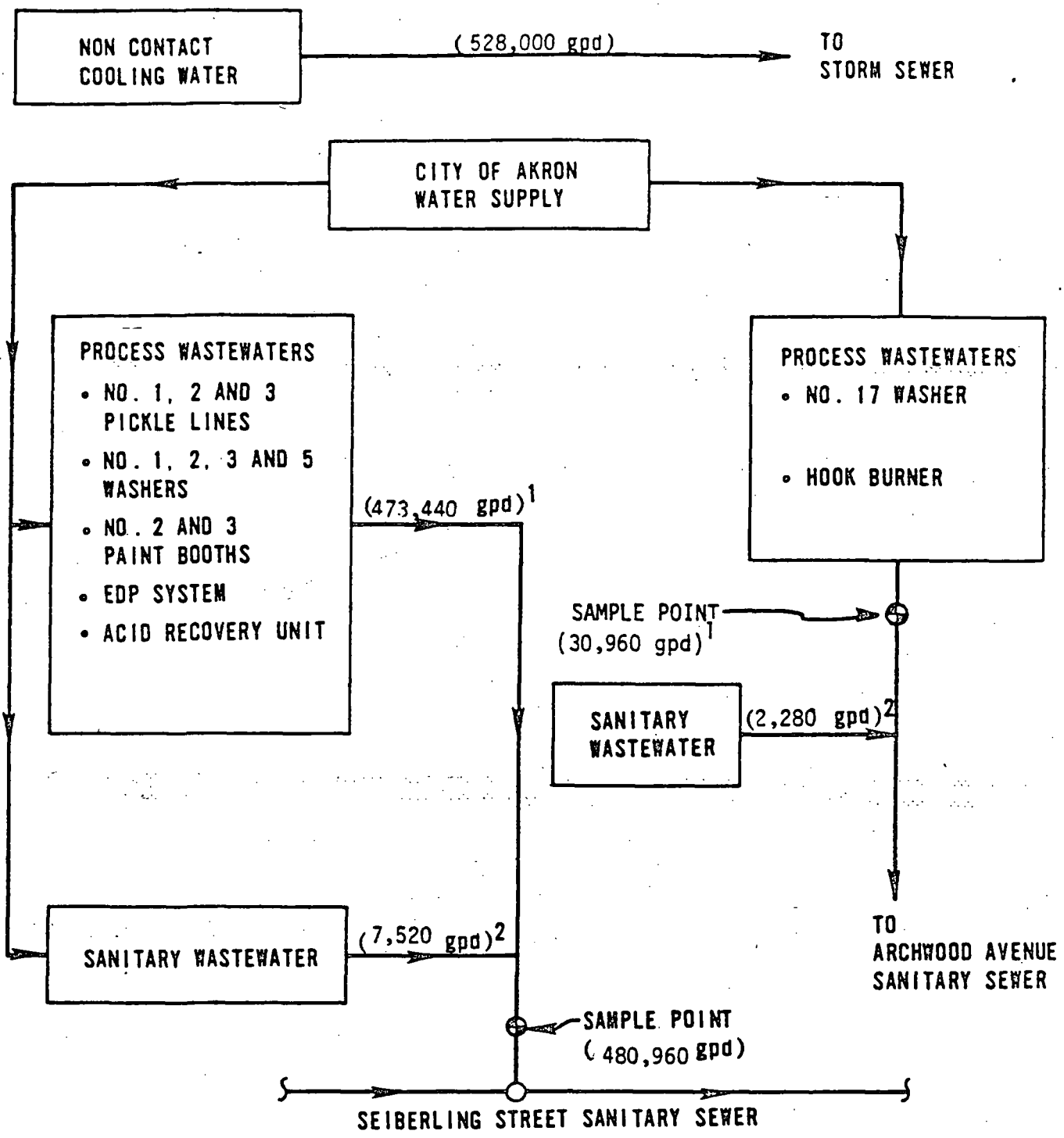

1 Current three shift operation flow rate
2 Based on 20 gallons per person per day
( ) Average Flow Rate

Figure 1

The Chester Engineers			SHEET NO. --	GOODYEAR METAL PRODUCTS DIVISION PERIODIC MONITORING REPORT PROCESS FLOW DIAGRAM
DWN.BY: VLP	SCALE: NONE	DATE APRIL 1986	DWG. NO. --	
CHK'D.BY: VLP	APPR.BY: DAF			

A Division Of
The Chester Engineers
P.O. Box 9366
Pittsburgh
Pennsylvania 15225
Phone: (412) 269-5700

Laboratory Analysis Report
For

Goodyear Metal Products
Akron, Ohio

Samples Received: 4/06/86
Report Date: 4/28/86

Analyses

Source	Water Fountain (Opposite Lab)	Water Fountain (L-15)	Water Fountain In Office Near The Archwood Sampling Manhole	Water Fountain By Zinc Phosphate Holding Tank
Log No. 86-	03271	03272	03273	03274
Date Collected	4/1-2/86	4/1-3/86	4/1-3/86	4/1-3/86
Zinc, mg/L Zn	1.3	0.54	2.1	1.2

3283-91

- Unless otherwise noted, analyses are in accordance with the methods and procedures outlined and approved by the Environmental Protection Agency and conform to quality assurance protocol.
- "Less-than" (<) values are indicative of the detection limit.

The Chester Engineers
P.O. Box 6356
Pittsburgh
Pennsylvania 15225
Phone: (412) 203-5700

Laboratory Analysis Report
For

Goodyear Metal Products
Akron, Ohio

Samples Received: 4/06/86
Report Date: 4/28/86

Analyses

Source	Seiberling	Seiberling	Seiberling	Seiberling
Log No. 86-	03267	03268	03269	03270
Date Collected	4/1-2/86	4/2-3/86	4/3-4/86	4/4-5/86
pH	7.0	6.8	6.9	6.8
Total Suspended Solids, mg/L	48	36	64	60
Freon Extractables, mg/L	93	0.8	1.2	1.0
Total Cynide, mg/L CN	0.015	0.015	0.02	0.023
Cadmium, mg/L Cd	<0.01	<0.01	<0.01	<0.01
Total Chromium, mg/L Cr	0.04	0.02	0.04	0.04
Copper, mg/L Cu	0.06	0.03	0.04	0.04
Lead, mg/L Pb	0.01	0.01	<0.01	0.01
Nickel, mg/L Ni	0.07	0.04	0.07	0.07
Silver, mg/L Ag	<0.01	<0.01	<0.01	<0.01
Zinc, mg/L Zn	0.37	0.15	0.28	0.23

3283-91

- Unless otherwise noted, analyses are in accordance with the methods and procedures outlined and approved by the Environmental Protection Agency and conform to quality assurance protocol.
- "Less-than" (<) values are indicative of the detection limit.

A Division Of
The Chester Engineers
P.O. Box 6356
Pittsburgh
Pennsylvania 15225
Phone (412) 269-5700

Laboratory Analysis Report
For

Goodyear Metal Products
Akron, Ohio

Volatile Compounds

Samples Received: 4/06/86
Report Date: 4/28/86

Source	Seiberling	Seiberling	Seiberling	Seiberling
Log No. 86-	03267	03268	03269	03270
Date Collected	4/1-2/86	4/2-3/86	4/3-4/86	4/4-5/86
Acrolein, µg/L	<10	<10	<10	<10
Acrylonitrile, µg/L	<10	<10	<10	<10
Benzene, µg/L	<10	<10	<10	<10
Bromoform, µg/L	<10	<10	<10	<10
Carbon Tetrachloride, µg/L	<10	<10	<10	<10
Chlorobenzene, µg/L	<10	<10	<10	<10
Chlorodibromomethane, µg/L	<10	<10	<10	<10
Chloroethane, µg/L	<10	<10	<10	<10
2-Chloroethylvinyl Ether, µg/L	<10	<10	<10	<10
Chloroform, µg/L	<10	<10	<10	<10
Dichlorobromomethane, µg/L	<10	<10	<10	<10
1,1-Dichloroethane, µg/L	<10	<10	<10	<10
1,2-Dichloroethane, µg/L	<10	<10	<10	<10
1,1-Dichloroethylene, µg/L	<10	<10	<10	<10
1,2-Dichloropropane, µg/L	<10	<10	<10	<10
cis-1,3-Dichloropropene, µg/L	<10	<10	<10	<10
trans-1,3-Dichloropropene, µg/L	<10	<10	<10	<10
Ethylbenzene, µg/L	<10	<10	<10	<10
Methyl Bromide, µg/L	<10	<10	<10	<10
Methyl Chloride, µg/L	<10	<10	<10	<10
Methylene Chloride, µg/L	<10	<10	<10	<10
1,1,2,2-Tetrachloroethane, µg/L	<10	<10	<10	<10
Tetrachloroethylene, µg/L	<10	<10	<10	<10
Toluene, µg/L	<10	<10	<10	<10
1,2-Trans-Dichloroethylene, µg/L	<10	<10	<10	<10
1,1,1-Trichloroethane, µg/L	<10	<10	<10	<10
1,1,2-Trichloroethane, µg/L	<10	<10	<10	<10
Trichloroethylene, µg/L	<10	<10	<10	<10
Vinyl Chloride, µg/L	<10	<10	<10	<10

- Unless otherwise noted, analyses are in accordance with the methods and procedures outlined and approved by the Environmental Protection Agency and conform to quality assurance protocol.
- "Less-than" (<) values are indicative of the detection limit.

The Chester Engineers
P.O. Box 9364
Pittsburgh
Pennsylvania 15225
Phone (412) 269-5700

Laboratory Analysis Report
For
Goodyear Metal Products
Akron, Ohio

Base-Neutral Extractables

Samples Received: 4/06/86
Report Date: 4/28/86

Source	Seiberling	Seiberling	Seiberling	Seiberling
Log No. 86-	03267	03268	03269	03270
Date Collected	4/1-2/86	4/2-3/86	4/3-4/86	4/4-5/86
Acenaphthene, µg/L	<10	<10	<10	<10
Acenaphthylene, µg/L	<10	<10	<10	<10
Anthracene, µg/L	<10	<10	<10	<10
Benzidine, µg/L	<10	<10	<10	<10
Benzo(a)Anthracene, µg/L	<10	<10	<10	<10
Benzo(a)Pyrene, µg/L	<10	<10	<10	<10
3,4-Benzo-Fluoranthene, µg/L	<10	<10	<10	<10
Benzo(g,h,i)Perylene, µg/L	<10	<10	<10	<10
Benzo(k)Fluoranthene, µg/L	<10	<10	<10	<10
Bis(2-Chloroethoxy)Methane, µg/L	<10	<10	<10	<10
Bis(2-Chloroethyl)Ether, µg/L	<10	<10	<10	<10
Bis(2-Chloroisopropyl)Ether, µg/L	<10	<10	<10	<10
Bis(2-Ethylhexyl)Phthalate, µg/L	<10	<10	<10	<10
4-Bromophenyl Phenyl Ether, µg/L	<10	<10	<10	<10
Butyl Benzyl Phthalate, µg/L	<10	<10	<10	<10
2-Chloronaphthalene, µg/L	<10	<10	<10	<10
4-Chlorophenyl Phenyl Ether, µg/L	<10	<10	<10	<10
Chrysene, µg/L	<10	<10	<10	<10
Dibenzo(a,h)Anthracene, µg/L	<10	<10	<10	<10
1,2-Dichlorobenzene, µg/L	<10	<10	<10	<10
1,3-Dichlorobenzene, µg/L	<10	<10	<10	<10
1,4-Dichlorobenzene, µg/L	<10	<10	<10	<10
3,3'-Dichlorobenzidine, µg/L	<10	<10	<10	<10
Diethyl Phthalate, µg/L	<10	<10	<10	<10
Dimethyl Phthalate, µg/L	<10	<10	<10	<10
Di-N-Butyl Phthalate, µg/L	<10	<10	<10	<10
2,4-Dinitrotoluene, µg/L	<10	<10	<10	<10
2,6-Dinitrotoluene, µg/L	<10	<10	<10	<10
Di-N-Octyl Phthalate, µg/L	<10	<10	<10	<10
1,2-Diphenylhydrazine, µg/L	<10	<10	<10	<10

- Unless otherwise noted, analyses are in accordance with the methods and procedures outlined and approved by the Environmental Protection Agency and conform to quality assurance protocol.
- "Less-than" (<) values are indicative of the detection limit.

LABORATORY ANALYSIS REPORT
FOR

Goodyear Metal Products
Akron, Ohio

Base-Neutral Extractables
(Continued)

Source	Seiberling	Seiberling	Seiberling	Seiberling
Log No. 86-	03267	03268	03269	03270
Date Collected	4/1-2/86	4/2-3/86	4/3-4/86	4/4-5/86
Fluoranthene, µg/L	<10	<10	<10	<10
Fluorene, µg/L	<10	<10	<10	<10
Hexachlorobenzene, µg/L	<10	<10	<10	<10
Hexachlorobutadiene, µg/L	<10	<10	<10	<10
Hexacyclochloropentadiene, µg/L	<10	<10	<10	<10
Hexachloroethane, µg/L	<10	<10	<10	<10
Indeno(1,2,3-cd)Pyrene, µg/L	<10	<10	<10	<10
Isophoroene, µg/L	<10	<10	<10	<10
Naphthalene, µg/L	<10	<10	<10	<10
Nitrobenzene, µg/L	<10	<10	<10	<10
N-Nitrosodimethylamine, µg/L	<10	<10	<10	<10
N-Nitrosodi-N-Propylamine, µg/L	<10	<10	<10	<10
N-Nitrosodiphenylamine, µg/L	<10	<10	<10	<10
Phenanthrene, µg/L	<10	<10	<10	<10
Pyrene, µg/L	<10	<10	<10	<10
1,2,4-Trichlorobenzene, µg/L	<10	<10	<10	<10

In compliance

The Chester Engineers
P.O. Box 9354
Pittsburgh
Pennsylvania 15225
Phone: (412) 269-5700

Laboratory Analysis Report
For

Goodyear Metal Products
Akron, Ohio

Samples Received: 4/06/86
Report Date: 4/28/86

Pesticides and PCB

Source	Seiberling	Seiberling	Seiberling	Seiberling
Log No. 86-	03267	03268	03269	03270
Date Collected	4/1-2/86	4/2-3/86	4/3-4/86	4/4-5/86
Aldrin, µg/L	<10	<10	<10	<10
a-BHC, µg/L	<10	<10	<10	<10
b-BHC, µg/L	<10	<10	<10	<10
d-BHC, µg/L	<10	<10	<10	<10
g-BHC, µg/L	<10	<10	<10	<10
Chlordane, µg/L	<10	<10	<10	<10
4,4'-DDT, µg/L	<10	<10	<10	<10
4,4'-DDE, µg/L	<10	<10	<10	<10
4,4'-DDD, µg/L	<10	<10	<10	<10
Dieldrin, µg/L	<10	<10	<10	<10
a-Endosulfan, µg/L	<10	<10	<10	<10
b-Endosulfan, µg/L	<10	<10	<10	<10
Endosulfan Sulfate, µg/L	<10	<10	<10	<10
Endrin, µg/L	<10	<10	<10	<10
Endrin Aldehyde, µg/L	<10	<10	<10	<10
Heptachlor, µg/L	<10	<10	<10	<10
Heptachlor Epoxide, µg/L	<10	<10	<10	<10
PCB-1242, µg/L	<10	<10	<10	<10
PCB-1254, µg/L	<10	<10	<10	<10
PCB-1221, µg/L	<10	<10	<10	<10
PCB-1232, µg/L	<10	<10	<10	<10
PCB-1248, µg/L	<10	<10	<10	<10
PCB-1260, µg/L	<10	<10	<10	<10
PCB-1016, µg/L	<10	<10	<10	<10
Toxaphene, µg/L	<10	<10	<10	<10
2,3,7,8-Tetrachlorodibenzo-P-Dioxin, µg/L	<10	<10	<10	<10

- Unless otherwise noted, analyses are in accordance with the methods and procedures outlined and approved by the Environmental Protection Agency and conform to quality assurance protocol.
- "Less-than" (<) values are indicative of the detection limit.

The Chester Engineers
P.O. Box 9366
Pittsburgh
Pennsylvania 15225
Phone (412) 299-5700

Laboratory Analysis Report
For
Goodyear Metal Products
Akron, Ohio

Acid Extractables

Samples Received: 4/06/86
Report Date: 4/28/86

Source	Seiberling	Seiberling	Seiberling	Seiberling
Log No. 86-———	03267	03268	03269	03270
Date Collected	4/1-2/86	4/2-3/86	4/3-4/86	4/4-5/86
2-Chlorophenol, µg/L	<10	<10	<10	<10
2,4-Dichlorophenol, µg/L	<10	<10	<10	<10
2,4-Dimethylphenol, µg/L	<10	<10	<10	<10
4,6-Dinitro-O-Cresol, µg/L	<10	<10	<10	<10
2,4-Dinitrophenol, µg/L	<10	<10	<10	<10
2-Nitrophenol, µg/L	<10	<10	<10	<10
4-Nitrophenol, µg/L	<10	<10	<10	<10
P-Chloro-M-Cresol, µg/L	<10	<10	<10	<10
Pentachlorophenol, µg/L	<10	<10	<10	<10
Phenol, µg/L	<10	<10	<10	<10
2,4,6-Trichlorophenol, µg/L	<10	<10	<10	<10

- Unless otherwise noted, analyses are in accordance with the methods and procedures outlined and approved by the Environmental Protection Agency and conform to quality assurance protocol.
- "Less-than" (<) values are indicative of the detection limit.

A Division Of
The Chester Engineers
P O Box 6356
Pittsburgh
Pennsylvania 15225
Phone: (412) 269-5700

Laboratory Analysis Report
For
Goodyear Metal Products
Akron, Ohio

Analyses

Samples Received: 4/06/86
Report Date: 4/28/86

Source	Archwood	Archwood	Archwood	Archwood
Log No. 86-	03263	03264	03265	03266
Date Collected	4/1-2/86	4/2-3/86	4/3-4/86	4/4-5/86
pH	7.5	7.3	7.3	7.8
Total Suspended Solids, mg/L	14	3	14	124
Freon Extractables, mg/L	0.3	0.3	2.0	16
Total Cyniide, mg/L CN	<0.005	<0.005	<0.005	<0.005
Cadmium, mg/L Cd	<0.01	<0.01	<0.01	<0.01
Total Chromium, mg/L Cr	<0.01	<0.01	<0.01	0.02
Copper, mg/L Cu	<0.01	<0.01	<0.01	0.02
Lead, mg/L Pb	<0.01	<0.01	0.01	0.04
Nickel, mg/L Ni	<0.01	<0.01	<0.01	0.01
Silver, mg/L Ag	<0.01	<0.01	<0.01	<0.01
Zinc, mg/L Zn	0.28	0.25	0.26	0.42

3283-91

- Unless otherwise noted, analyses are in accordance with the methods and procedures outlined and approved by the Environmental Protection Agency and conform to quality assurance protocol.
- "Less-than" (<) values are indicative of the detection limit.

A Division Of
The Chester Engineers
P O Box 9356
Pittsburgh
Pennsylvania 15225
Phone (412) 269-5700

Laboratory Analysis Report
For
Goodyear Metal Products
Akron, Ohio

Volatile Compounds

Samples Received: 4/06/86
Report Date: 4/28/86

Source	Archwood	Archwood	Archwood	Archwood
Log No. 86-	03263	03264	03265	03266
Date Collected	4/1-2/86	4/2-3/86	4/3-4/86	4/4-5/86
Acrolein, µg/L	<10	<10	<10	<10
Acrylonitrile, µg/L	<10	<10	<10	<10
Benzene, µg/L	<10	<10	<10	<10
Bromoform, µg/L	<10	<10	<10	<10
Carbon Tetrachloride, µg/L	<10	<10	<10	<10
Chlorobenzene, µg/L	<10	<10	<10	<10
Chlorodibromomethane, µg/L	<10	<10	<10	<10
Chloroethane, µg/L	<10	<10	<10	<10
2-Chloroethylvinyl Ether, µg/L	<10	<10	<10	<10
Chloroform, µg/L	<10	32	<10	<10
Dichlorobromomethane, µg/L	<10	<10	<10	<10
1,1-Dichloroethane, µg/L	<10	<10	<10	<10
1,2-Dichloroethane, µg/L	<10	<10	<10	<10
1,1-Dichloroethylene, µg/L	<10	<10	<10	<10
1,2-Dichloropropane, µg/L	<10	<10	<10	<10
cis-1,3-Dichloropropene, µg/L	<10	<10	<10	<10
trans-1,3-Dichloropropene, µg/L	<10	<10	<10	<10
Ethylbenzene, µg/L	<10	<10	<10	<10
Methyl Bromide, µg/L	<10	<10	<10	<10
Methyl Chloride, µg/L	<10	<10	<10	<10
Methylene Chloride, µg/L	<10	<10	<10	<10
1,1,2,2-Tetrachloroethane, µg/L	<10	<10	<10	<10
Tetrachloroethylene, µg/L	<10	<10	<10	<10
Toluene, µg/L	<10	<10	<10	<10
1,2-Trans-Dichloroethylene, µg/L	<10	<10	<10	<10
1,1,1-Trichloroethane, µg/L	<10	<10	<10	<10
1,1,2-Trichloroethane, µg/L	<10	<10	<10	<10
Trichloroethylene, µg/L	<10	<10	<10	<10
Vinyl Chloride, µg/L	<10	<10	<10	<10

- Unless otherwise noted, analyses are in accordance with the methods and procedures outlined and approved by the Environmental Protection Agency and conform to quality assurance protocol.
- "Less-than" (<) values are indicative of the detection limit.

The Chester Engineers
P.O. Box 8366
Pittsburgh
Pennsylvania 15225
Phone: (412) 203-5700

Laboratory Analysis Report
For

Goodyear Metal Products
Akron, Ohio

Samples Received: 4/06/86
Report Date: 4/28/86

Base-Neutral Extractables

Source	Archwood	Archwood	Archwood	Archwood
Log No. 86-	03263	03264	03265	03266
Date Collected	4/1-2/86	4/2-3/86	4/3-4/86	4/4-5/86
Acenaphthene, µg/L	<10	<10	<10	<10
Acenaphthylene, µg/L	<10	<10	<10	<10
Anthracene, µg/L	<10	<10	<10	<10
Benzidine, µg/L	<10	<10	<10	<10
Benzo(a)Anthracene, µg/L	<10	<10	<10	<10
Benzo(a)Pyrene, µg/L	<10	<10	<10	<10
3,4-Benzo-Fluoranthene, µg/L	<10	<10	<10	<10
Benzo(g,h,i)Perylene, µg/L	<10	<10	<10	<10
Benzo(k)Fluoranthene, µg/L	<10	<10	<10	<10
Bis(2-Chloroethoxy)Methane, µg/L	<10	<10	<10	<10
Bis(2-Chloroethyl)Ether, µg/L	<10	<10	<10	<10
Bis(2-Chloroisopropyl)Ether, µg/L	<10	<10	<10	<10
Bis(2-Ethylhexyl)Phthalate, µg/L	<10	<10	<10	<10
4-Bromophenyl Phenyl Ether, µg/L	<10	<10	<10	<10
Butyl Benzyl Phthalate, µg/L	<10	<10	<10	<10
2-Chloronaphthalene, µg/L	<10	<10	<10	<10
4-Chlorophenyl Phenyl Ether, µg/L	<10	<10	<10	<10
Chrysene, µg/L	<10	<10	<10	<10
Dibenzo(a,h)Anthracene, µg/L	<10	<10	<10	<10
1,2-Dichlorobenzene, µg/L	<10	<10	<10	<10
1,3-Dichlorobenzene, µg/L	<10	<10	<10	<10
1,4-Dichlorobenzene, µg/L	<10	<10	<10	<10
3,3'-Dichlorobenzidine, µg/L	<10	<10	<10	<10
Diethyl Phthalate, µg/L	<10	<10	<10	<10
Dimethyl Phthalate, µg/L	<10	<10	<10	<10
Di-N-Butyl Phthalate, µg/L	<10	<10	<10	<10
2,4-Dinitrotoluene, µg/L	<10	<10	<10	<10
2,6-Dinitrotoluene, µg/L	<10	<10	<10	<10
Di-N-Octyl Phthalate, µg/L	<10	<10	<10	<10
1,2-Diphenylhydrazine, µg/L	<10	<10	<10	<10

- Unless otherwise noted, analyses are in accordance with the methods and procedures outlined and approved by the Environmental Protection Agency and conform to quality assurance protocol.
- "Less-than" (<) values are indicative of the detection limit.

LABORATORY ANALYSIS REPORT
FOR

Goodyear Metal Products
Akron, Ohio

Base-Neutral Extractables
(Continued)

Source	Archwood	Archwood	Archwood	Archwood
Log No. 86-	03263	03264	03265	03266
Date Collected	4/1-2/86	4/2-3/86	4/3-4/86	4/4-5/86
Fluoranthene, µg/L	<10	<10	<10	<10
Fluorene, µg/L	<10	<10	<10	<10
Hexachlorobenzene, µg/L	<10	<10	<10	<10
Hexachlorobutadiene, µg/L	<10	<10	<10	<10
Hexacyclochloropentadiene, µg/L	<10	<10	<10	<10
Hexachloroethane, µg/L	<10	<10	<10	<10
Indeno(1,2,3-cd)Pyrene, µg/L	<10	<10	<10	<10
Isophoroene, µg/L	<10	<10	<10	<10
Naphthalene, µg/L	<10	<10	<10	<10
Nitrobenzene, µg/L	<10	<10	<10	<10
N-Nitrosodimethylamine, µg/L	<10	<10	<10	<10
N-Nitrosodi-N-Propylamine, µg/L	<10	<10	<10	<10
N-Nitrosodiphenylamine, µg/L	<10	<10	<10	<10
Phenanthrene, µg/L	<10	<10	<10	<10
Pyrene, µg/L	<10	<10	<10	<10
1,2,4-Trichlorobenzene, µg/L	<10	<10	<10	<10

Chester Laboratories
A Division Of
The Chester Engineers
P O Box 9356
Pittsburgh
Pennsylvania 15225
Phone (412) 269-5700

Laboratory Analysis Report
For

Goodyear Metal Products
Akron, Ohio

Samples Received: 4/06/86
Report Date: 4/28/86

Acid Extractables

Source	Archwood	Archwood	Archwood	Archwood
Log No. 86-	03263	03264	03265	03266
Date Collected	4/1-2/86	4/2-3/86	4/3-4/86	4/4-5/86
2-Chlorophenol, µg/L	<10	<10	<10	<10
2,4-Dichlorophenol, µg/L	<10	<10	<10	<10
2,4-Dimethylphenol, µg/L	<10	<10	<10	<10
4,6-Dinitro-O-Cresol, µg/L	<10	<10	<10	<10
2,4-Dinitrophenol, µg/L	<10	<10	<10	<10
2-Nitrophenol, µg/L	<10	<10	<10	<10
4-Nitrophenol, µg/L	<10	<10	<10	<10
P-Chloro-M-Cresol, µg/L	<10	<10	<10	<10
Pentachlorophenol, µg/L	<10	<10	<10	<10
Phenol, µg/L	<10	<10	<10	<10
2,4,6-Trichlorophenol, µg/L	<10	<10	<10	<10

- Unless otherwise noted, analyses are in accordance with the methods and procedures outlined and approved by the Environmental Protection Agency and conform to quality assurance protocol.
- "Less-than" (<) values are indicative of the detection limit.

A Division Of
The Chester Engineers
P O Box 6356
Pittsburgh
Pennsylvania 15225
Phone (412) 269-5700

Laboratory Analysis Report
For

Goodyear Metal Products
Akron, Ohio

Samples Received: 4/06/86
Report Date: 4/28/86

Pesticides and PCB

Source	Archwood	Archwood	Archwood	Archwood
Log No. 86-	03263	03264	03265	03266
Date Collected	4/1-2/86	4/2-3/86	4/3-4/86	4/4-5/86
Aldrin, µg/L	<10	<10	<10	<10
a-BHC, µg/L	<10	<10	<10	<10
b-BHC, µg/L	<10	<10	<10	<10
d-BHC, µg/L	<10	<10	<10	<10
g-BHC, µg/L	<10	<10	<10	<10
Chlordane, µg/L	<10	<10	<10	<10
4,4'-DDT, µg/L	<10	<10	<10	<10
4,4'-DDE, µg/L	<10	<10	<10	<10
4,4'-DDD, µg/L	<10	<10	<10	<10
Dieldrin, µg/L	<10	<10	<10	<10
a-Endosulfan, µg/L	<10	<10	<10	<10
b-Endosulfan, µg/L	<10	<10	<10	<10
Endosulfan Sulfate, µg/L	<10	<10	<10	<10
Endrin, µg/L	<10	<10	<10	<10
Endrin Aldehyde, µg/L	<10	<10	<10	<10
Heptachlor, µg/L	<10	<10	<10	<10
Heptachlor Epoxide, µg/L	<10	<10	<10	<10
PCB-1242, µg/L	<10	<10	<10	<10
PCB-1254, µg/L	<10	<10	<10	<10
PCB-1221, µg/L	<10	<10	<10	<10
PCB-1232, µg/L	<10	<10	<10	<10
PCB-1248, µg/L	<10	<10	<10	<10
PCB-1260, µg/L	<10	<10	<10	<10
PCB-1016, µg/L	<10	<10	<10	<10
Toxaphene, µg/L	<10	<10	<10	<10
2,3,7,8-Tetrachlorodibenzo-P-Dioxin, µg/L	<10	<10	<10	<10

- Unless otherwise noted, analyses are in accordance with the methods and procedures outlined and approved by the Environmental Protection Agency and conform to quality assurance protocol.
- "Less-than" (<) values are indicative of the detection limit.