Remedial Investigation

Preliminary Site Characterization Summary

Waukegan Manufactured Gas and Coke Plant Site Waukegan, Illinois

Appendices 2-A through 3-E

Prepared for North Shore Gas Company

Under the Administrative Order on Consent Re: Remedial Investigation and Feasibility Study for the Waukegan Manufactured Gas and Coke Plant Site Waukegan, Illinois

April 1994

US EPA RECORDS CENTER REGION 5
398647

Barr
Engineering Company

Remedial Investigation

Preliminary Site Characterization Summary

Waukegan Manufactured Gas and Coke Plant Site Waukegan, Illinois

Appendices 2-A through 3-E

Prepared for North Shore Gas Company

Under the Administrative Order on Consent Re: Remedial Investigation and Feasibility Study for the Waukegan Manufactured Gas and Coke Plant Site Waukegan, Illinois

April 1994

Barr
Engineering Company
8300 Norman Center Drive
Minneapolis, MN 55437
Phone: (612) 832-2600
Fax: (612) 832-2601

TABLE OF CONTENTS

APPENDIX 2-A CT&T Wood-Treating Plant Information

APPENDIX 2-B Information Relating to OMC Operations

APPENDIX 2-C Lake Michigan Depth Soundings

APPENDIX 2-D Utility Maps

APPENDIX 3-A Waukegan Harbor Superfund Site Geologic/Hydrogeologic Data

APPENDIX 3-B Waukegan Harbor Superfund Site Soil Quality Data

APPENDIX 3-C Waukegan Harbor Superfund Site Groundwater Quality Data

APPENDIX 3-D 1989 IEPA Soil Investigation

APPENDIX 3-E Sediment and Surface Water Quality Data

Appendix 2-A

CT & T Wood-Treating Plant Information

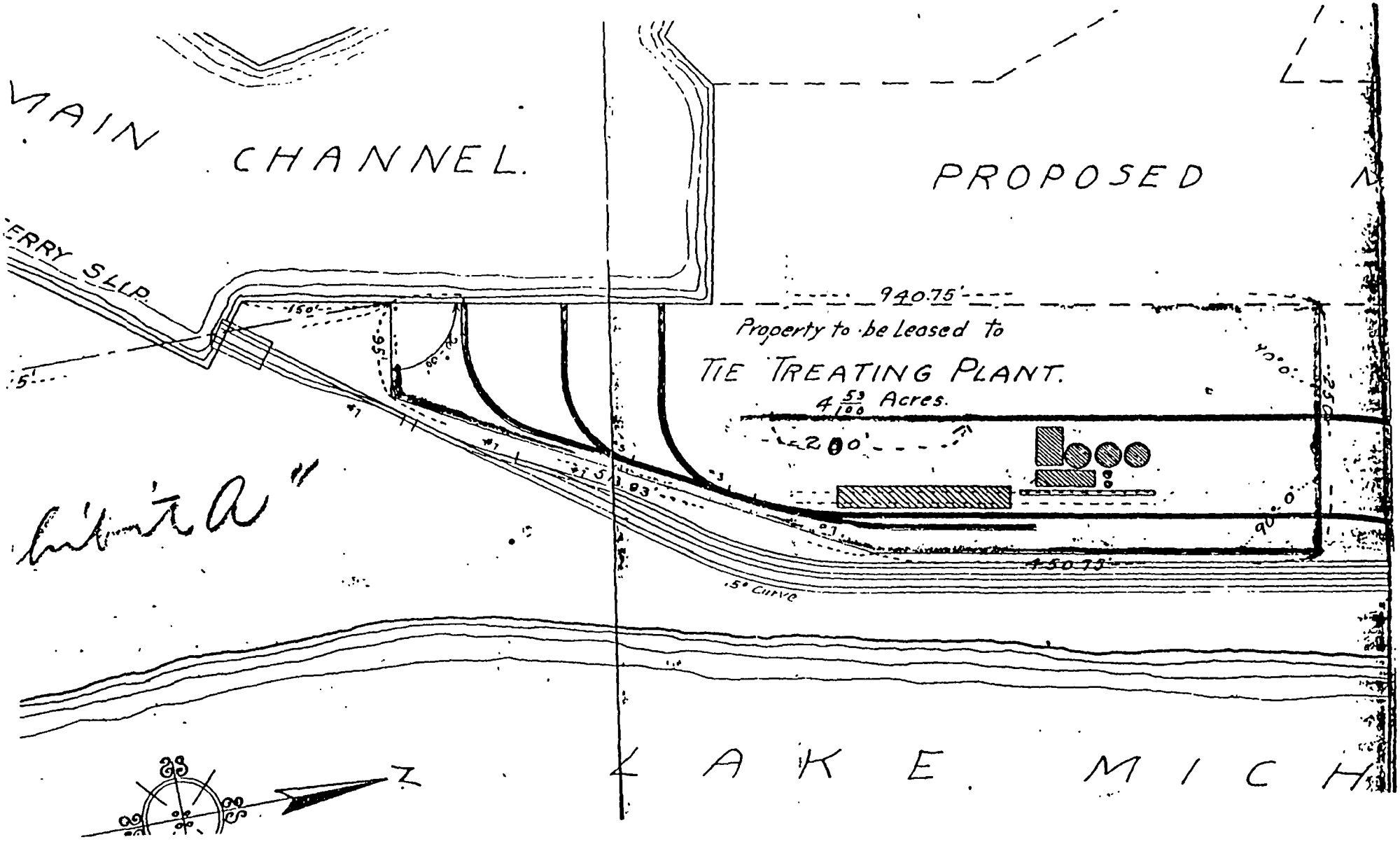
MAIN CHANNEL.
PROPOSED
ERRY SLIP.
940.75'
Property to be Leased to
TIE TREATING PLANT.
4 53/100 Acres.
200'
150'
95'
90°0'
250'
513.93'
450.75'
.5° Curve
LAKE MICH
N

Appendix 2-B

Information Relating to OMC Operations

OMC Fire Control Training Information

Slip No. 4 Construction Plans

Canonie Site Plan

Limits of Dredging, Waukegan Harbor Superfund Site

SUMMARY OF OMC FIRE CONTROL TRAINING PERMIT INFORMATION

YEAR	MATERIAL BURNED							PERMIT DATE	AUTHORIZED BURNING DATES
	N-HEPTANE	WOOD	NO. 2 FUEL OIL	GAS	KEROSENE	ALUMINUM/ MAGNESIUM	POLYETHYLENE		
1989	400 lbs.	25 lbs.					10 lbs.		4/01/89 - 6/01/89
1988		100 lbs.	5 gal.					July 22, 1988	8/01/88 - 8/01/89
1987		100 lbs.	- 20 gal. -					August 19, 1987	8/31/87 - 8/30/88
1986		100 lbs.	- 20 gal. -					August 28, 1986	9/01/86 - 8/31/87
1985		100 lbs.	- 20 gal. -					June 3, 1985	5/28/85 - 5/27/86
1984		100 lbs.	- 20 gal. -					April 3, 1984	3/29/84 - 3/28/85
1981		100 lbs.	- 20 gal. -			20 lbs.		NA	NA
1980		100 lbs.	- 20 gal. -			20 lbs.		April 17, 1980	4/21/80 - 11/21/80
1979		100 lbs.	- 20 gal. -			20 lbs.		April 9, 1979	4/15/79 - 11/15/79
1976		100 lbs.	- 20 gal. -			20 lbs.		June 25, 1976	6/21/75 - 6/21/76
1975		100 lbs.	- 20 gal. -					May 1, 1975	6/21/74 - 6/21/75
1973		100 lbs.		20 gal.	20 gal.	20 lbs.		June 28, 1973	6/21/73 - 6/21/74

NOTE: Information from OMC, 1990(a). Reported location of fire training activities shown on Figure 2.2-1.

NA = Not available.

Slip No. 4 Construction Plans

DRAWING NUMBER	87-126-E7
7-6-89	7-6-89
PGR	CC
CHECKED BY	APPROVED BY
KHW	5-24-89
DRAWN BY	

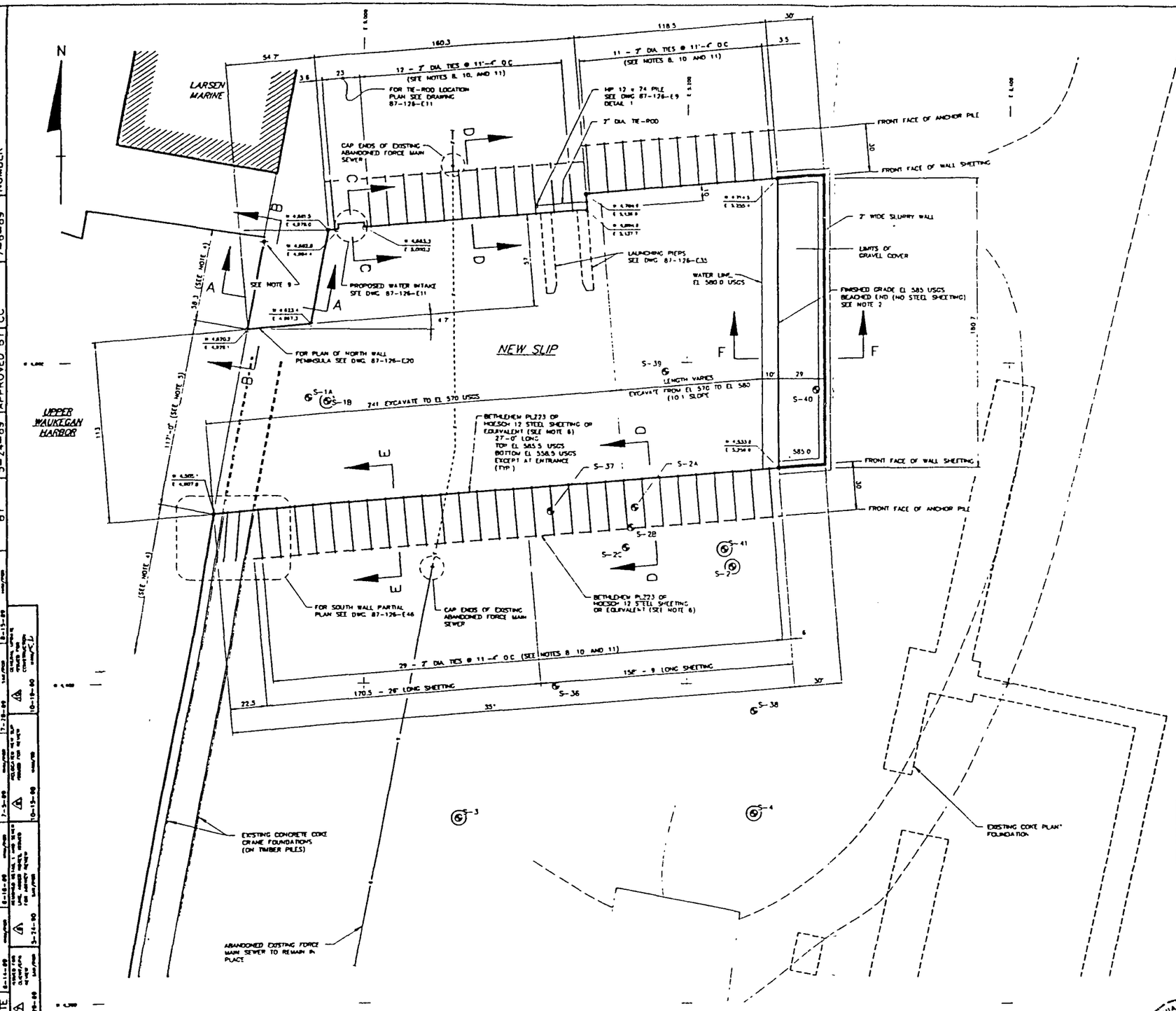

REFERENCES:
- TOPOGRAPHIC MAP BY AERIAL SERVICES, INC. CEDAR FALLS, IOWA. DATE OF PHOTOGRAPHY 11-28-88
- LARSEN MARINES' LAYOUT PLAN FOR NEWSLIP DATED MAY 23 1989

LEGEND:

- EXISTING UNIMPROVED ROADWAY
- S-2A SOIL BORING
- S-2 SOIL BORING DRILLED INTO HARDPAN
- EXISTING SEWER LINE (SEE NOTE 7)
- EXISTING SEWER LINE TO BE REMOVED (SEE NOTE 7)
- ABANDONED COKE PLANT FOUNDATION (SEE NOTE 7)
- BENCHMARK

NOTES:

1. ALL ELEVATIONS SHOWN ARE USGS ELEVATIONS. IGL (INTERNATIONAL GREAT LAKES) ELEVATION = USGS ELEVATION - 1.8 FEET.
2. FINISHED GRADE ELEVATION AROUND NEW SLIP IS 585 (USGS). EXISTING GROUND SURFACE IS 584.5± (USGS)
3. FOR CROSS SECTIONS A-A, B-B, AND F-F SEE DWG 87-126-E9. FOR CROSS SECTION C-C, SEE DWG 87-126-E11. FOR CROSS SECTIONS D-D AND E-E SEE DWG. 87-126-E10
4. EXISTING TIE-BACK WALL TO REMAIN IN PLACE.
5. 117' EXISTING TIE-BACK WALL AND COKE CRANE FOUNDATION (ON TIMBER PILES) TO BE DISMANTLED AND REMOVED.
6. STEEL SHEET PILE MINIMUM REQUIREMENTS: ASTM A328, MINIMUM YIELD POINT: 38,500 psi, MINIMUM TENSILE STRENGTH: 70,000 psi, MINIMUM ELONGATION: 17%
7. APPROXIMATE LOCATIONS OF EXISTING SEWER LINE AND ABANDONED COKE PLANT FOUNDATIONS WERE TAKEN FROM "THACKER ENGINEERING OFFICE" DWG. No. 22-45-12, OCT. 12, 1971.
8. THE SPACING OF TIE-RODS MAY VARY DEPENDING ON THE FINAL SELECTION OF THE SHEET PILES.
9. A BENCHMARK WILL BE ESTABLISHED AT THE NORTHEAST CORNER OF THE UPPER HARBOR PRIOR TO BEGINNING CONSTRUCTION.
10. TIE-RODS, WASHERS, WASHER PLATES AND HEX NUTS SHALL BE GALVANIZED TO REDUCE CORROSION.
11. TIE-RODS SHALL BE 2" DIA. WITH 2 1/2" UPSET ENDS.
12. DIMENSIONS SHOWN ARE TO THE INSIDE FACE OF C12 x 20.7 WALES UNLESS NOTED OTHERWISE.

ISSUED FOR CONSTRUCTION

SCALE: 30 0 30 60 FEET

GENERAL LAYOUT AND PROPOSED DREDGING CONTOURS NEW SLIP CONFIGURATION

WAUKEGAN HARBOR, WAUKEGAN, ILLINOIS

PREPARED FOR

WAUKEGAN HARBOR TRUST

CanonieEnvironmental

REVISIONS NO.	DATE		DRAWN BY	CHECKED BY	APPROVED BY
1	11-20-89	FINAL ISSUE TO AGENCIES	SAK	CC	
0	10-19-89	ISSUED FOR CONSTRUCTION	MAH	CC	
No.	DATE	CONSTRUCTION ISSUE/REVISION	DWN BY	CK'D BY	AP'D BY

CHIA CHANG 062-041624 REGISTERED PROFESSIONAL ENGINEER ILLINOIS Expires 11-30-1991

DATE: 5-24-89	NS-3	DRAWING NUMBER 87-126-E7 1
SCALE: AS SHOWN		

Ref: Canonie Slip Construction Plans 1989

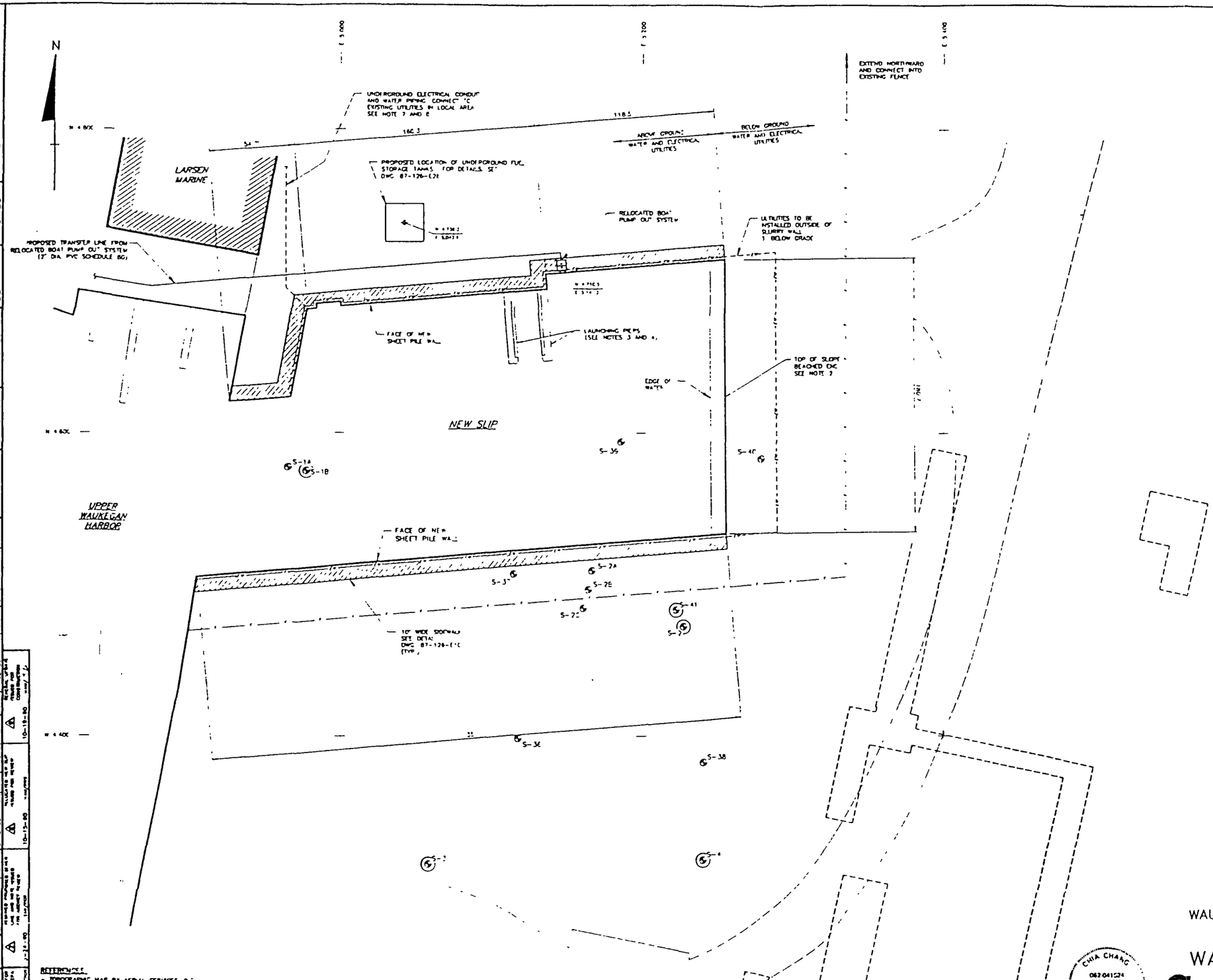

LEGEND:

- PROPOSED FENCE
- EXISTING UNIMPROVED ROADWAY
- S-2A SOIL BORING
- S-2 SOIL BORING DRILLED INTO HARDPAN
- PROPOSED ELECTRIC AND WATER LINE INSTALLED ABOVE GROUND
- PROPOSED ELECTRIC AND WATER LINE INSTALLED BELOW GROUND
- ABANDONED COKE PLANT FOUNDATION (SEE NOTE 5)

NOTES:

1. ALL ELEVATIONS SHOWN ARE USGS ELEVATIONS. IGL (INTERNATIONAL GREAT LAKES) ELEVATION = USGS ELEVATION - 1.8 FEET.
2. FINISHED GRADE ELEVATION AROUND NEW SLIP IS 585.0 (USGS)
3. LAUNCHING PIER IS SUPPORTED ON H-PILES DRIVEN INTO CLAY TILL. SEE DWG 87-126-E35
4. 2'-6"± x 45'-0", 25 TON MARINE TRAVELIFT MODEL 25 BFM MOBILE BOAT HOIST LAUNCHING RUNWAY, TOP EL 585.0 (USGS)
5. APPROXIMATE LOCATIONS OF EXISTING COKE PLANT FOUNDATIONS WERE TAKEN FROM "THACKER ENGINEERING OFFICE" DWG. 22-45-12, OCT. 12, 1971
6. BOAT DOCKS ARE NOT SHOWN.
7. FOR ELECTRICAL BLOCK DIAGRAM, WIRE AND CONDUIT SIZES SEE DWG. 87-126-E164
8. ALL UNDERGROUND WATER PIPING SHALL BE 1" DIA. POTABLE WATER POLYETHYLENE PIPE. ALL ABOVE GROUND WATER PIPING SHALL BE 1" DIA. SCH 40 GALVANIZED STEEL PIPE.

ISSUED FOR CONSTRUCTION

SCALE 30 0 30 60 FEET

ACCESSORIES AND IMPROVEMENTS
NEW SLIP CONFIGURATION

WAUKEGAN HARBOR, WAUKEGAN, ILLINOIS
PREPARED FOR
WAUKEGAN HARBOR TRUST

CanonieEnvironmental

No.	DATE	CONSTRUCTION ISSUE/REVISION	DWN BY	CK'D BY	APP'D BY
1	11-20-90	FINAL ISSUE TO AGENCIES	SAK		
2	10-19-90	ISSUED FOR CONSTRUCTION	MAM	SD	

CHIA CHANG 062-041524 REGISTERED PROFESSIONAL ENGINEER OF ILLINOIS
Expires 11-30-1992

DATE: 6-13-89	NS-4	DRAWING NUMBER 87-126-E17
SCALE: AS SHOWN		

REFERENCES:
- TOPOGRAPHIC MAP BY AERIAL SERVICES, INC., CEDAR FALLS, IOWA. DATE OF PHOTOGRAPHY 11-28-88
- LARSEN MARINES' LAYOUT PLAN FOR NEW SLIP DATED MAY 23, 1989

REVISIONS	NO.	DATE
	1	12-28-89
	2	2-24-90
	3	6-14-90
	4	6-15-90
	5	10-15-90
	6	10-19-90
	7	7-5-90
	8	7-28-90
	9	8-15-90
	10	8-15-90
	11	8-15-90
	12	8-15-90
	13	8-15-90
	14	8-15-90
	15	8-15-90

DRAWN BY KHM 6-13-89
CHECKED BY PGR 7-6-89
APPROVED BY CC 7-6-89
DRAWING NUMBER 87-126-E17

Ref: Canonie Slip Construction Plans 1989

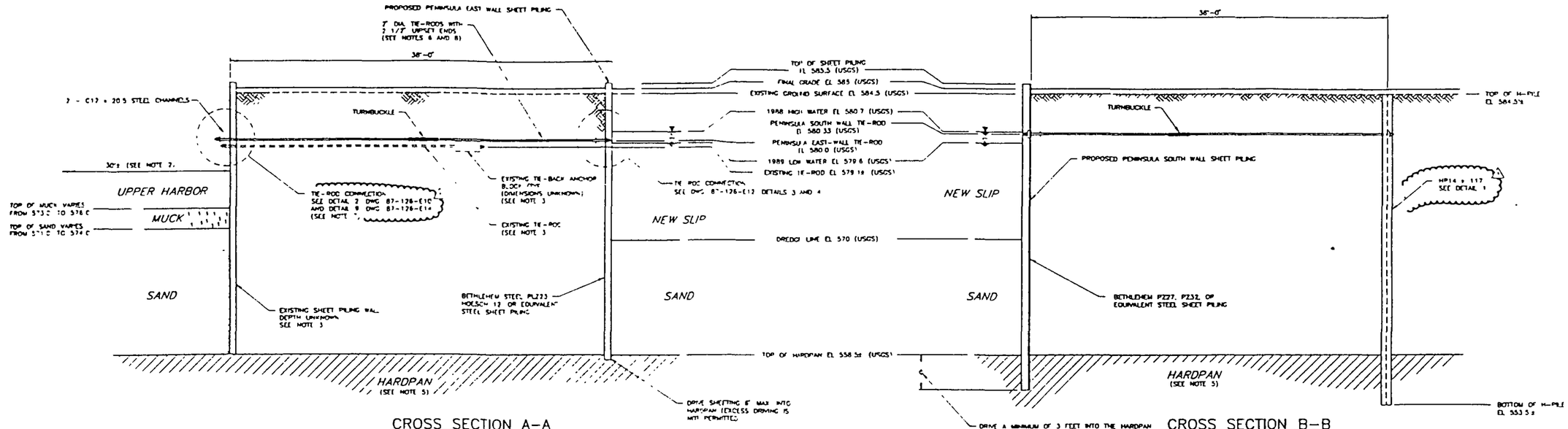

CROSS SECTION A–A
VIEW LOOKING NORTH
PENINSULA EAST–WEST SECTION
SCALE 1" = 5
5 0 5 FEET

CROSS SECTION B–B
VIEW LOOKING WEST
PENINSULA NORTH–SOUTH SECTION
SCALE 1" = 5
5 0 5 FEET

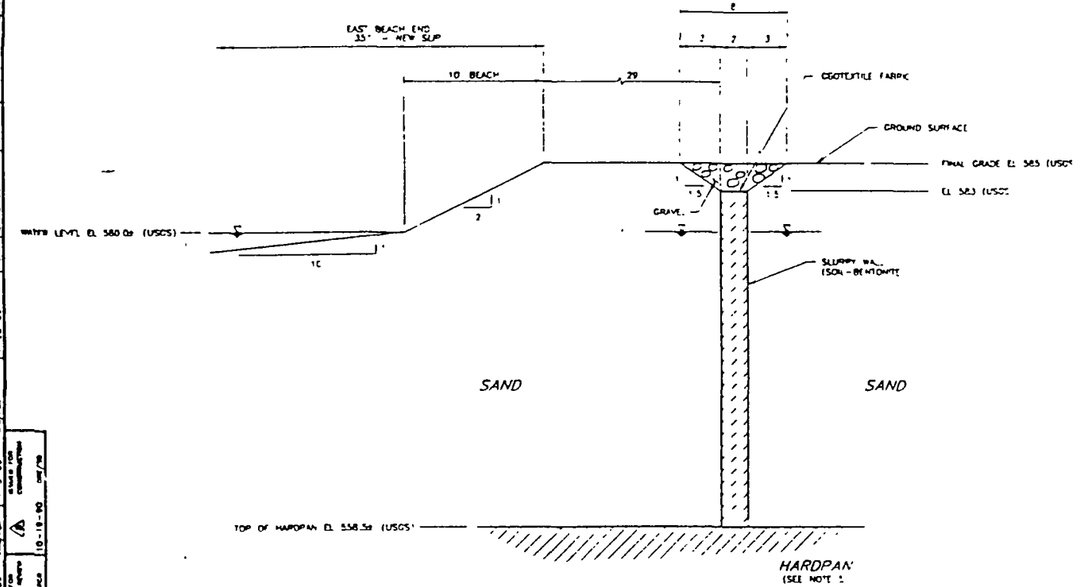

CROSS SECTION F–F
VIEW LOOKING NORTH
SLURRY WALL
SCALE 1" = 5
5 FEET

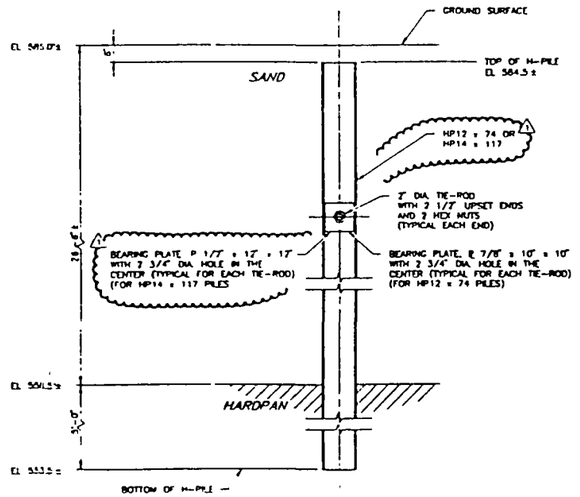

TYPICAL H-PILE EMBEDMENT
SCALE 1/2" = 1'-0"
0 1 2 FEET

NOTES:

1. ALL ELEVATIONS ARE USGS UNLESS OTHERWISE NOTED
2. TO PRESERVE THE STABILITY OF THE EXISTING SHEET PILING WALL, NO DREDGING IS PERMITTED IN THIS ZONE.
3. TO PRESERVE THE STABILITY OF EXISTING SHEET PILING WALL, NO DISTURBANCE IS PERMITTED FOR THE EXISTING TIE-BACK SYSTEM
4. FOR LOCATIONS OF CROSS SECTIONS A–A, B–B, AND F–F SEE DWGS. 87-126-E7, AND 87-126-E20.
5. HARDPAN IS A HARD SILTY CLAY WITH AN UNCONFINED COMPRESSIVE STRENGTH GREATER THAN 4.5 TONS PER SQUARE FOOT
6. INSTALL TIE-RODS ONE AT A TIME. BACKFILL SOIL AND COMPACT PRIOR TO THE INSTALLATION OF THE NEXT TIE-ROD
7. SUPPORTS FOR THE NEW WALE IN THE UPPER HARBOR AREA MAY BE SLIGHTLY UNDER WATER. DO NOT DEWATER UPPER HARBOR TO INSTALL SUPPORTS
8. THE SOIL UNDER AND ON THE SIDES OF THE NEWLY INSTALLED TIE-RODS SHALL BE WELL COMPACTED TO PREVENT HIGH TENSION FORCE PRODUCED BY THE MANITOWAC LIFTING CRANE LOADS

ISSUED FOR CONSTRUCTION

CHIA CHANG
062-041624
REGISTERED PROFESSIONAL ENGINEER
ILLINOIS
Expires 11-30-1992

CROSS SECTIONS A–A, B–B, AND F–F NEW SLIP CONFIGURATION

WAUKEGAN HARBOR, WAUKEGAN ILLINOIS

PREPARED FOR

WAUKEGAN HARBOR TRUST

CanonieEnvironmental

DRAWN BY	KHM	CHECKED BY	PRS	10-19-90	DRAWING NUMBER 87-126-E9
	6-7-89	APPROVED BY	CC		

NO.	DATE	REVISIONS	DWN BY	CK'D BY	APP'D BY
1	11-20-90	FINAL ISSUE TO AGENCIES, CHANGED ANCHOR PILE SIZE, CHANGED DETAIL REFERENCE	SAP	CD	CC
0	10-19-90	ISSUED FOR CONSTRUCTION	DRE	SC	CC

DATE: 6-7-89	NS-5	DRAWING NUMBER 87-126-E9 1
SCALE: AS NOTED		

Ref: Canonie Slip Construction Plans 1989

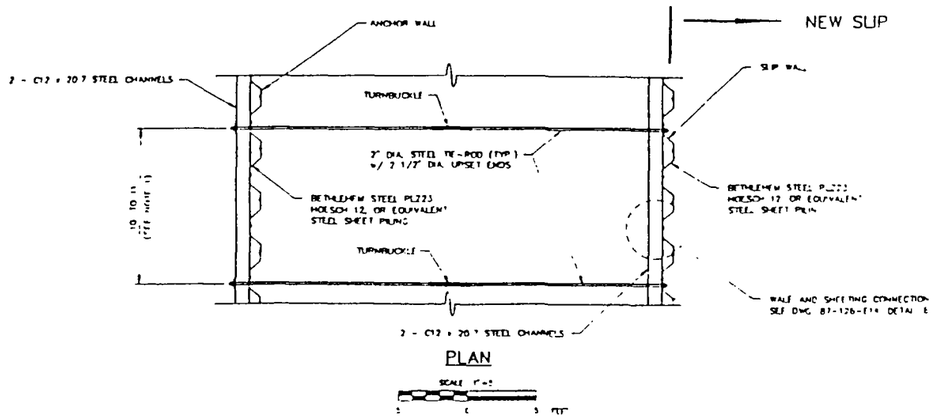

PLAN

SCALE 1"=5'

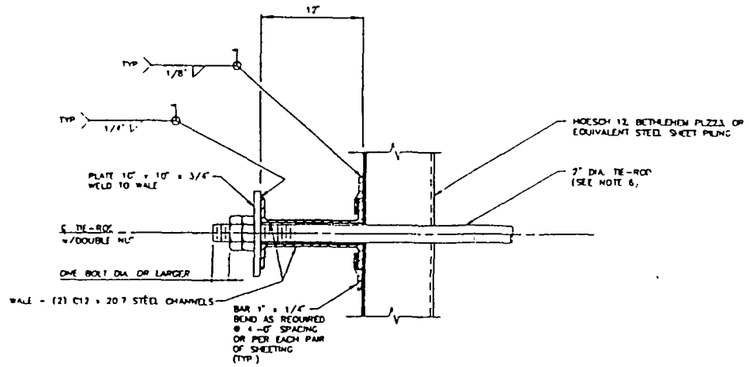

ELEVATION

7 / E12 WALE/ANCHOR WALL CONNECTION DETAIL

SCALE 1 1/2"=1'-0"

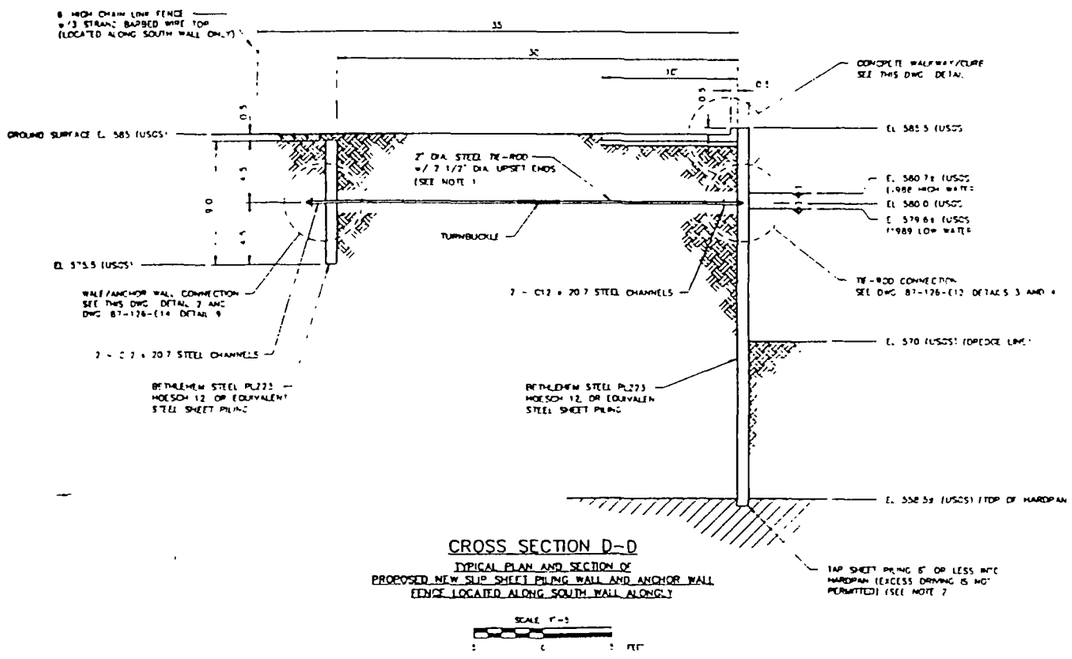

CROSS SECTION D-D

TYPICAL PLAN AND SECTION OF PROPOSED NEW SLIP SHEET PILING WALL AND ANCHOR WALL FENCE LOCATED ALONG SOUTH WALL ALONG Y

SCALE 1"=5'

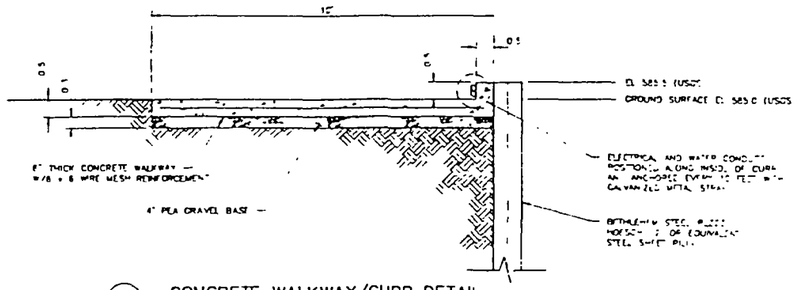

7 / E12 CONCRETE WALKWAY/CURB DETAIL

SCALE 1"=1'

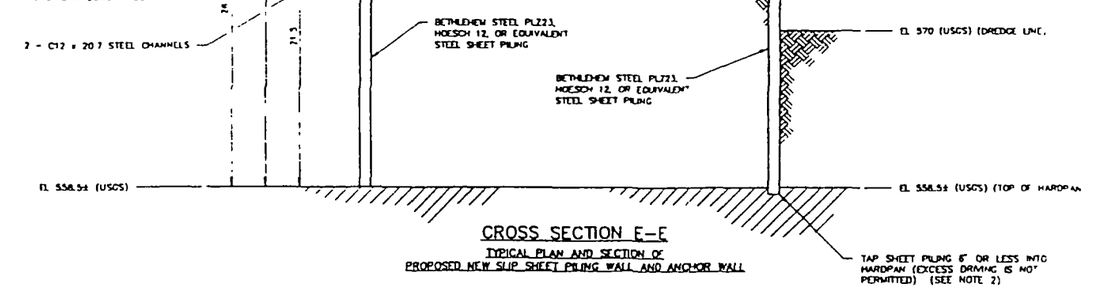

CROSS SECTION E-E

TYPICAL PLAN AND SECTION OF PROPOSED NEW SLIP SHEET PILING WALL AND ANCHOR WALL

SCALE 1"=5'

NOTES:

1. POSITION TIE-ROD IN CENTER OF SHEET PILE FLANGE. SPACING BETWEEN TIE-RODS MAY VARY SLIGHTLY, WHEN USING DIFFERENT SHEETING
2. IF STEEL SHEET PILE ENCOUNTERS VERY HARD DRIVING, THE MINIMUM TOE ELEVATION SHALL BE EL 560.0 (USGS)
3. ALL ELEVATIONS ARE USGS UNLESS OTHERWISE NOTED
4. FOR LOCATIONS OF SECTIONS D-D AND E-E SEE DWG 87-126-E7
5. TIE-RODS WASHERS WASHER PLATES AND HEX NUTS SHALL BE GALVANIZED TO REDUCE CORROSION
6. TIE-RODS SHALL BE 2" DIA. WITH 2 1/2" UPSET ENDS

ISSUED FOR CONSTRUCTION

CROSS SECTIONS D-D AND E-E
NEW SLIP CONFIGURATION
WAUKEGAN HARBOR, WAUKEGAN ILLINOIS

PREPARED FOR

WAUKEGAN HARBOR TRUST

CHIA CHANG 062-061624 REGISTERED PROFESSIONAL ENGINEER OF ILLINOIS — Expires 11-30-1992

Canonie Environmental

NO.	DATE	REVISIONS	DRAWN BY	CHECKED BY	PGR
1	11-20-89	FINAL ISSUE TO AGENCIES	SAK	[illegible]	CC
0	10-19-89	ISSUED FOR CONSTRUCTION	DRE	SD	CC

DATE: 6-16-89 | SCALE: AS SHOWN | NS-6 | DRAWING NUMBER 87-126-E10 1

Ref: Canonie Slip Construction Plans 1989

Canonie Site Plan

EVISIONS		DRAWN BY		DRAWING NUMBER
NO	DATE			86-059-BIII
		CHECKED BY		
		GWB		
		APPROVED BY		
		8-22-88		

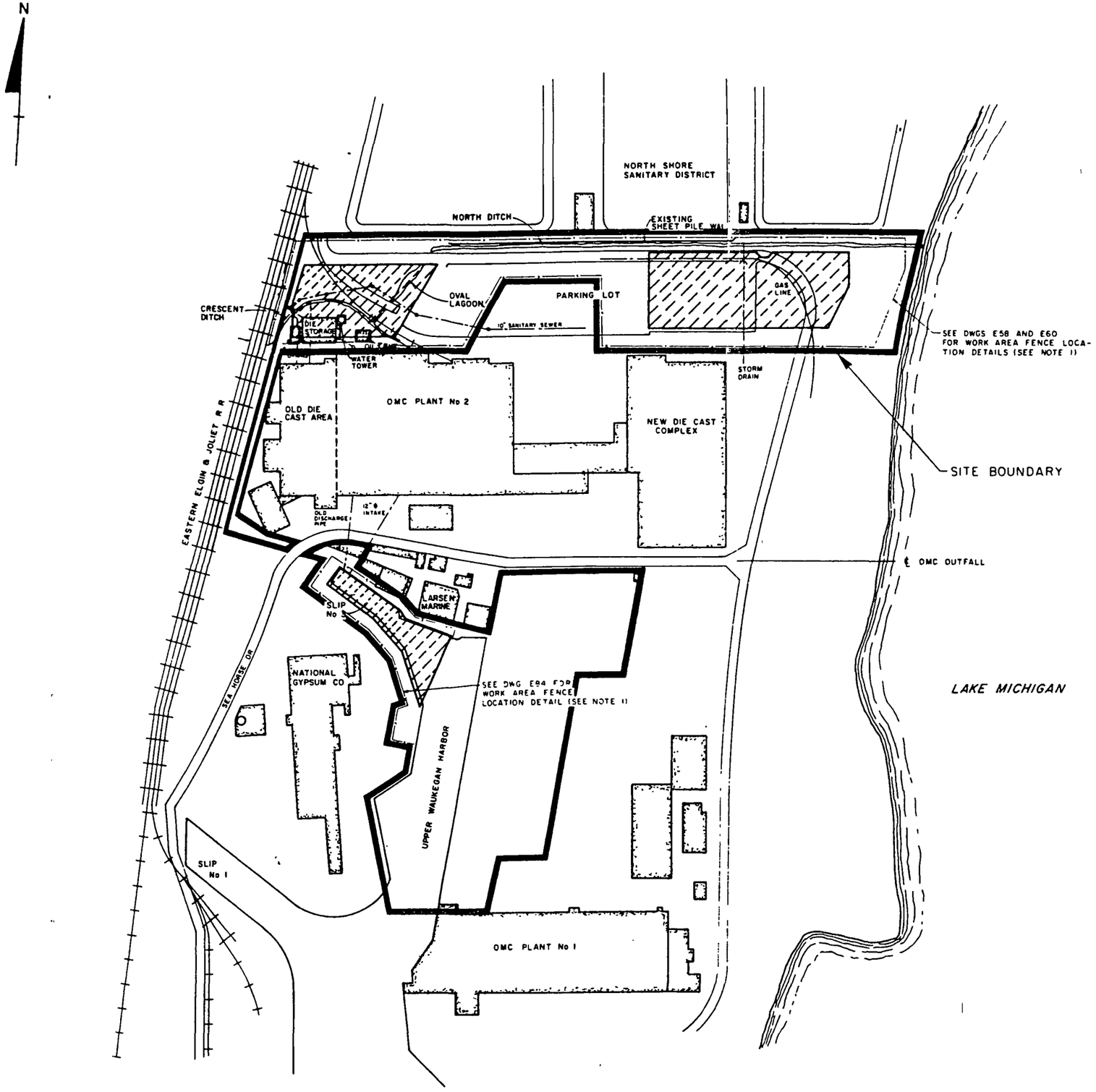

NOTES

1 TEMPORARY WORK AREA FENCES TO BE INSTALLED IN PHASES DURING THE REMEDIAL ACTION EXISTING FENCE WILL BE UTILIZED WHERE APPLICABLE

SCALE
200 0 200 400 FEET

SITE PLAN

WAUKEGAN HARBOR, WAUKEGAN, ILLINOIS

DATE: 8-22-88	ATTACHMENT I	DRAWING NUMBER 86-059-BIII
SCALE: AS SHOWN		

Ref: Canonie Site Plan 1988

Limits of Dredging, Waukegan Harbor Superfund Site

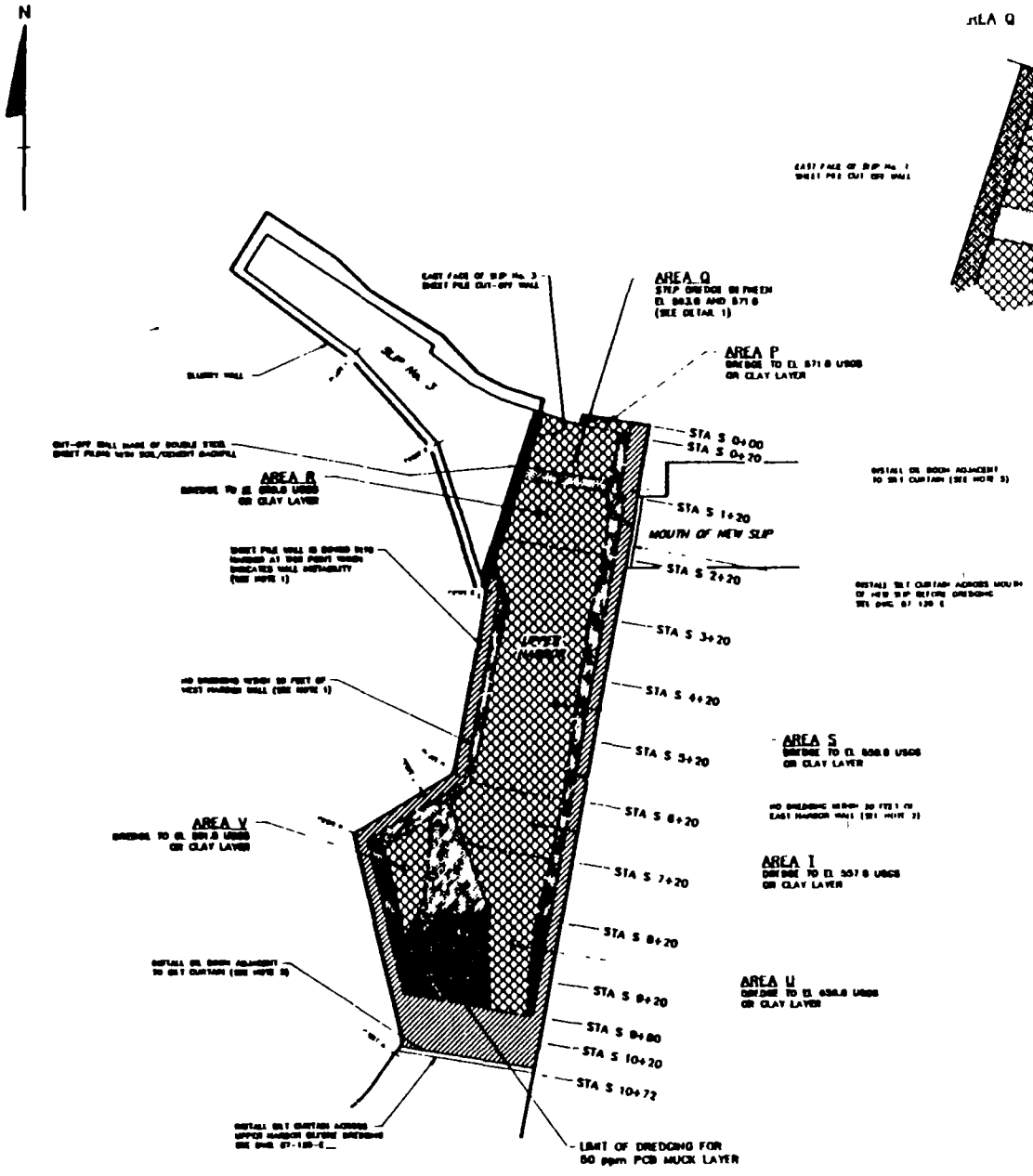

UPPER HARBOR PLAN
LIMITS OF DREDGING

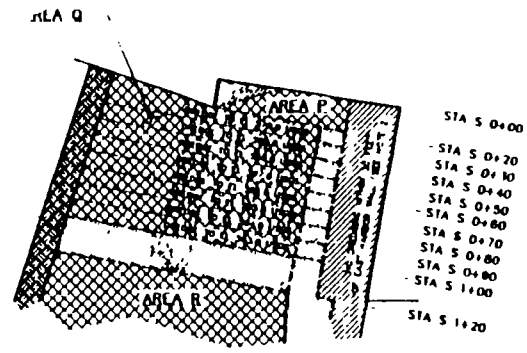

DETAIL 1
AREA Q DREDGING LIMITS

LEGEND:

- AREA OF SLOPED DREDGING (SEE NOTE 7)
- AREA OF NO DREDGING
- AREA OF LEVEL DREDGING
- SOIL/CEMENT BACKFILL
- TURNING POINT (SEE NOTE 9)

NOTES:

1. MAXIMUM DESIGN DREDGE LINE ALONG WEST BANK OF I IS 570.0 USGS PER ORIGINAL DESIGN OF EXISTING SHE (NATIONAL GYPSUM CO., BUFFALO, N.Y., SHEET PILE BU SECTION F TO G AND MISC. DETAILS, DWG. No. WID 18, EXISTING SOUNDING CONTOURS (NOV. 1987) INDICATE FROM EL 561.0± USGS ALONG WEST WALL AND THE WA SIGNS OF TILTING. TO PROTECT THE INTEGRITY OF THE DREDGING SHALL OCCUR WITHIN 20 FEET OF THE WALL
2. DESIGN DETAILS FOR THE EAST WALL OF THE UPPER H KNOWN. TO PROTECT THE STABILITY OF THE EAST WA SHALL OCCUR WITHIN 20 OR 30 FEET OF THE WALL WH
3. FOLLOWING THE COMPLETION OF DREDGING IN THE UPPE BACKFILL WILL BE PLACED ALONG THE BASE OF BOTH WEST UPPER HARBOR SHEET PILE WALLS TO INCREASE THE SHEET PILE WALLS. THE BACKFILL SHALL NOT EX USGS AT THE SHEET PILE WALL.
4. IGL DATUM + 1.8 FEET = USGS DATUM
5. INSTALL OIL BOOMS IN FRONT OF SILT CURTAINS AT NO AND SOUTH END OF UPPER HARBOR TO PREVENT THE FLOATING OIL. FLOATING OIL WILL BE SKIMMED FROM THE HARBOR DURING DREDGING USING CONVENTIONAL TECHNIQUES.
6. NO BOAT TRAFFIC WILL BE ALLOWED IN THE UPPER HA DREDGING ACTIVITIES PERIOD. THE DREDGING ACTIVITI WHEN THE SILT CURTAINS ARE INSTALLED AND ENDS W CURTAINS ARE REMOVED
7. THESE AREAS WILL BE DREDGED ON A SLOPE TO PROV BETWEEN AREAS WITH DIFFERENT FINAL ELEVATIONS.
8. FOR DREDGING PROFILES FROM STATION 0+00 TO S 8+ 87-126-E60, E61, E62, E68, AND E69
9. NATIONAL GYPSUM TURNING POINT DESIGNATIONS, SHE CONSTRUCTION DRAWINGS WID-17 AND WID 18

H-10

6

UPPER HARBOR MUCK LA
LIMITS OF DREDGING

WAUKEGAN HARBOR, WAUKEGA
PREPARED FOR
WAUKEGAN HARBOR
Canonie Environ

DATE	8 7 89	DR
SCALE	AS SHOWN	87

Appendix 2-C

Lake Michigan Depth Soundings

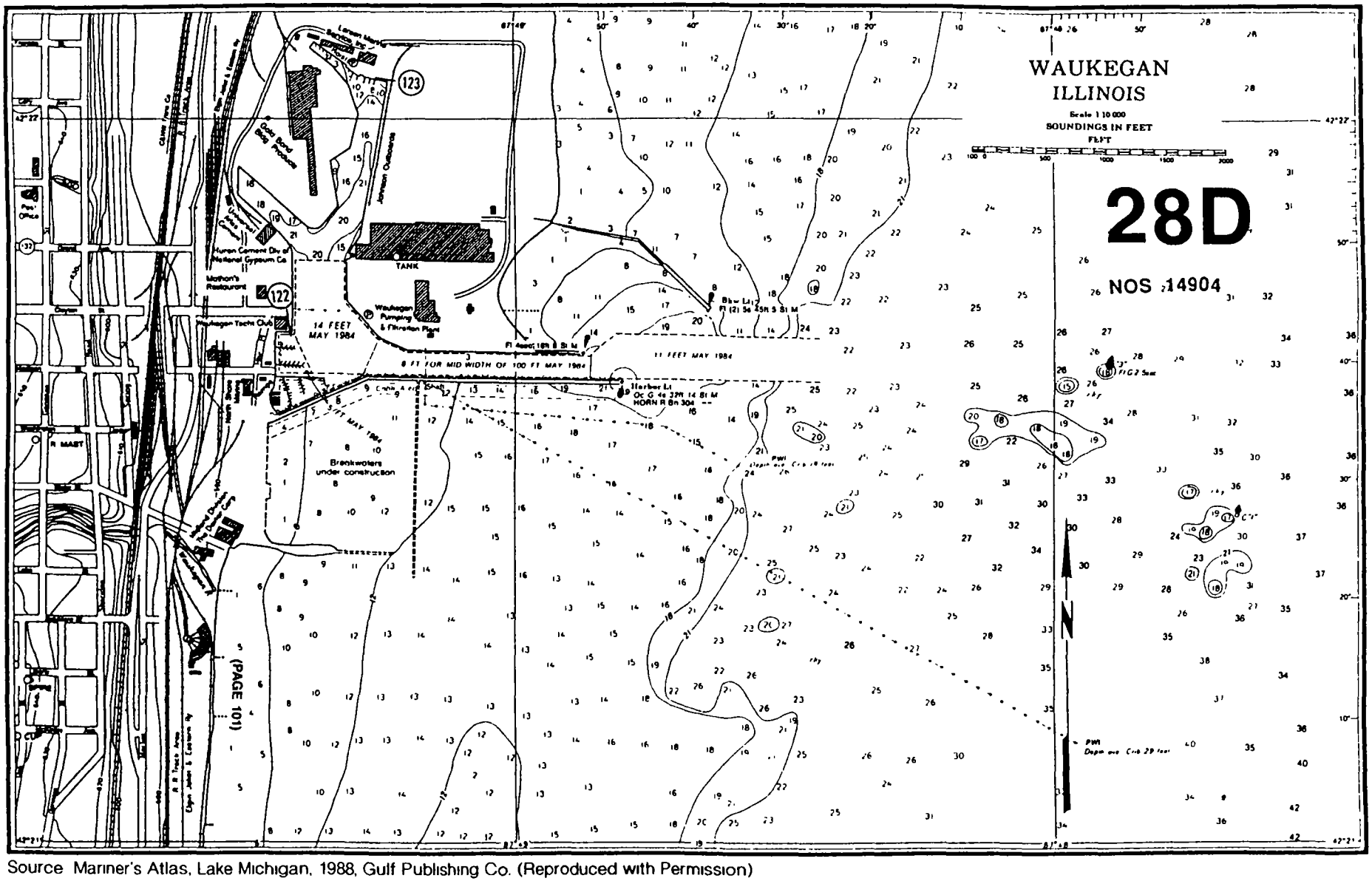

Source Mariner's Atlas, Lake Michigan, 1988, Gulf Publishing Co. (Reproduced with Permission)

Figure 2-C-1

LAKE MICHIGAN DEPTH SOUNDINGS

Appendix 2-D

Utility Maps

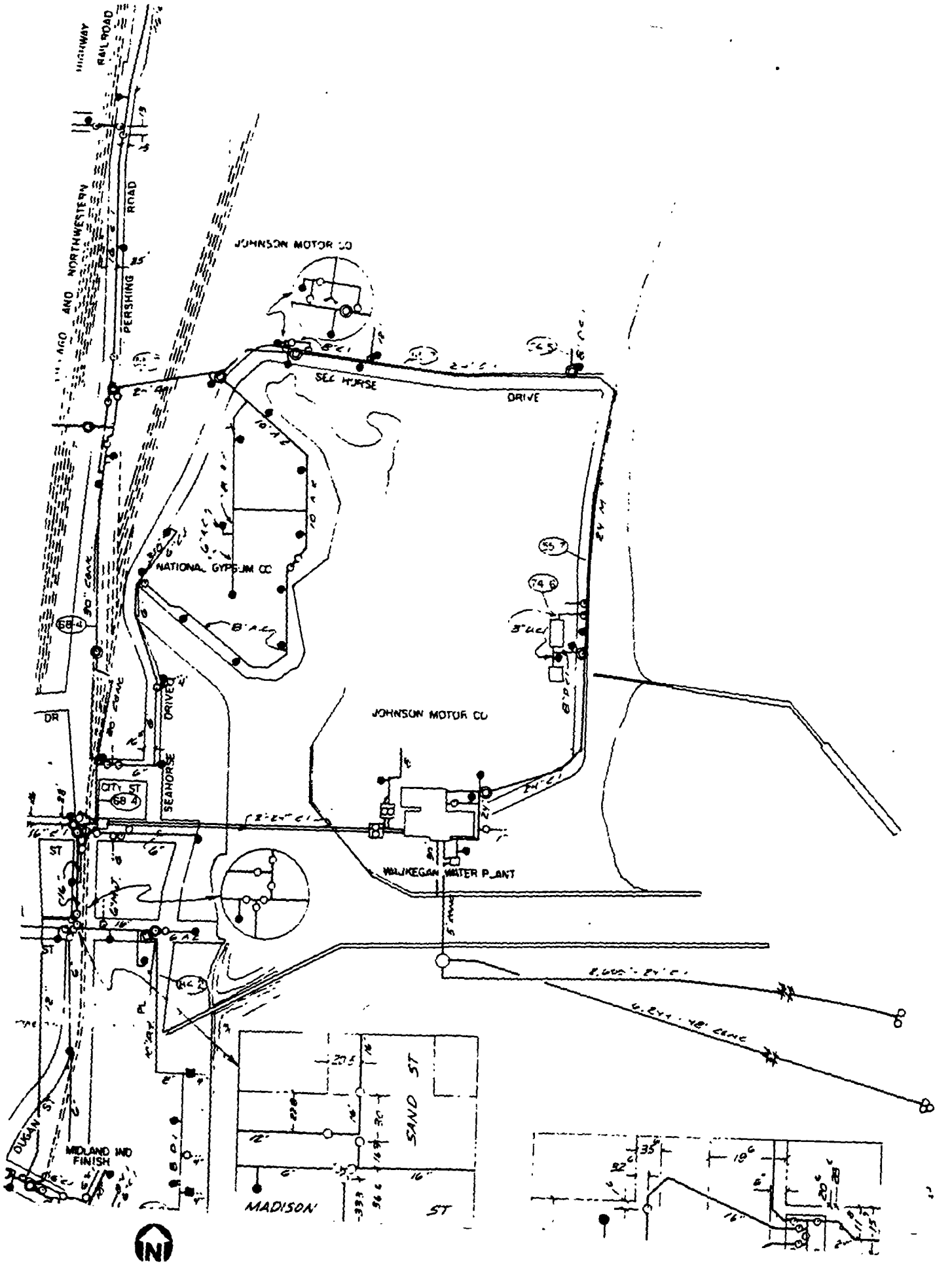

Figure 2-D-1

CITY OF WAUKEGAN
WATER UTILITY LOCATION

Sec. 22-45-12

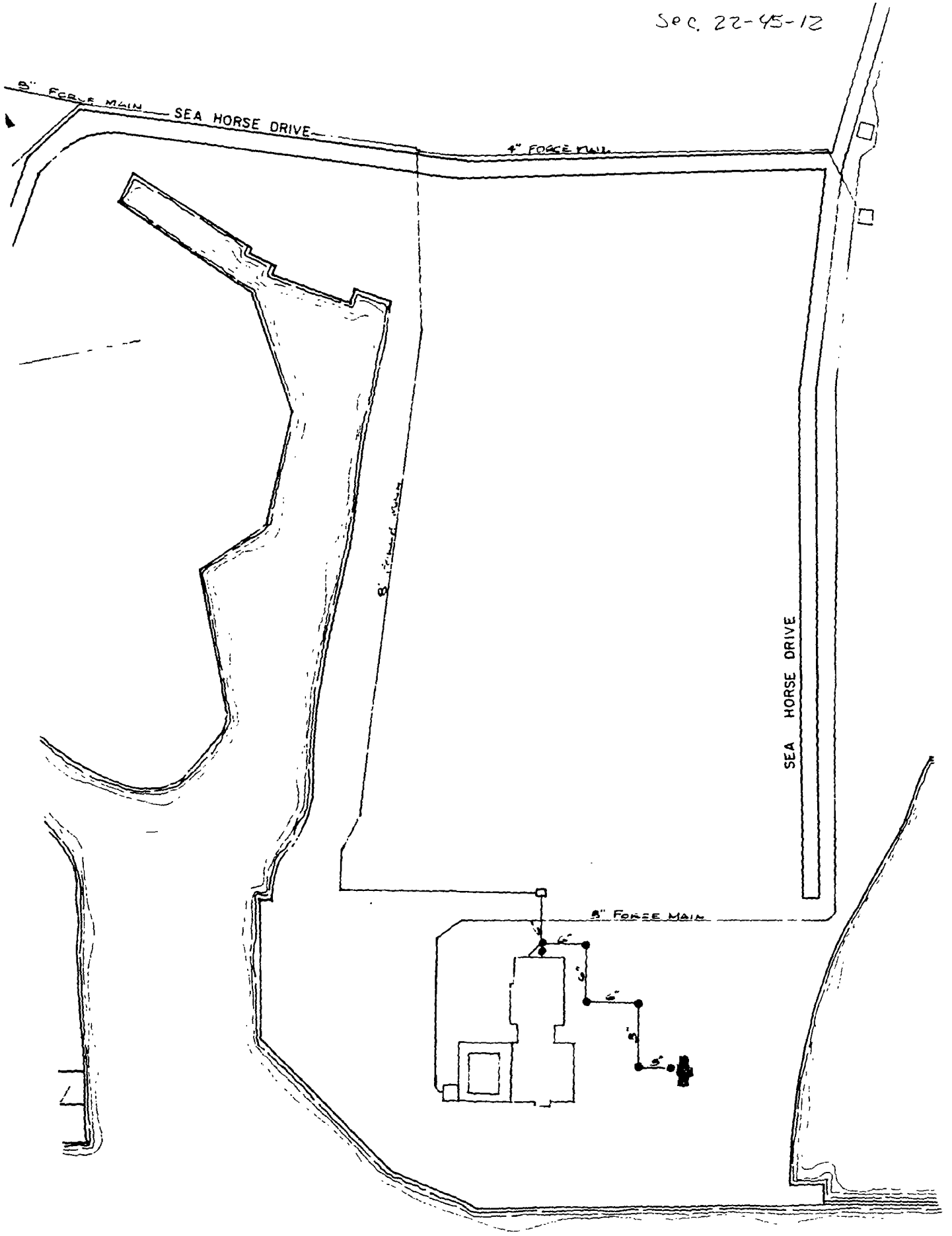

Figure 2-D-2

CITY OF WAUKEGAN
SANITARY SEWER UTILITY LOCATION

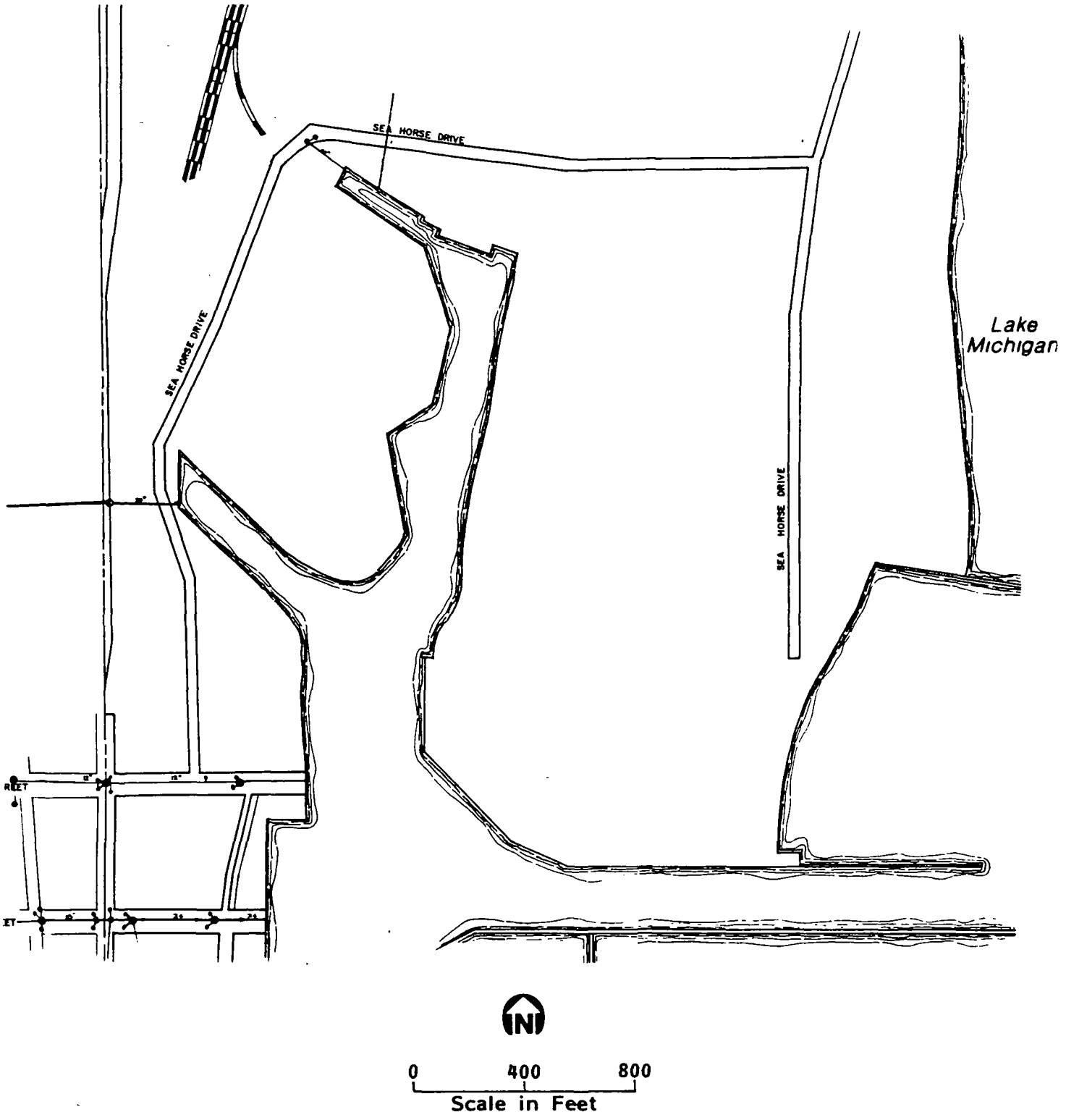

Figure 2-D-3

CITY OF WAUKEGAN
STORM SEWER UTILITY LOCATION

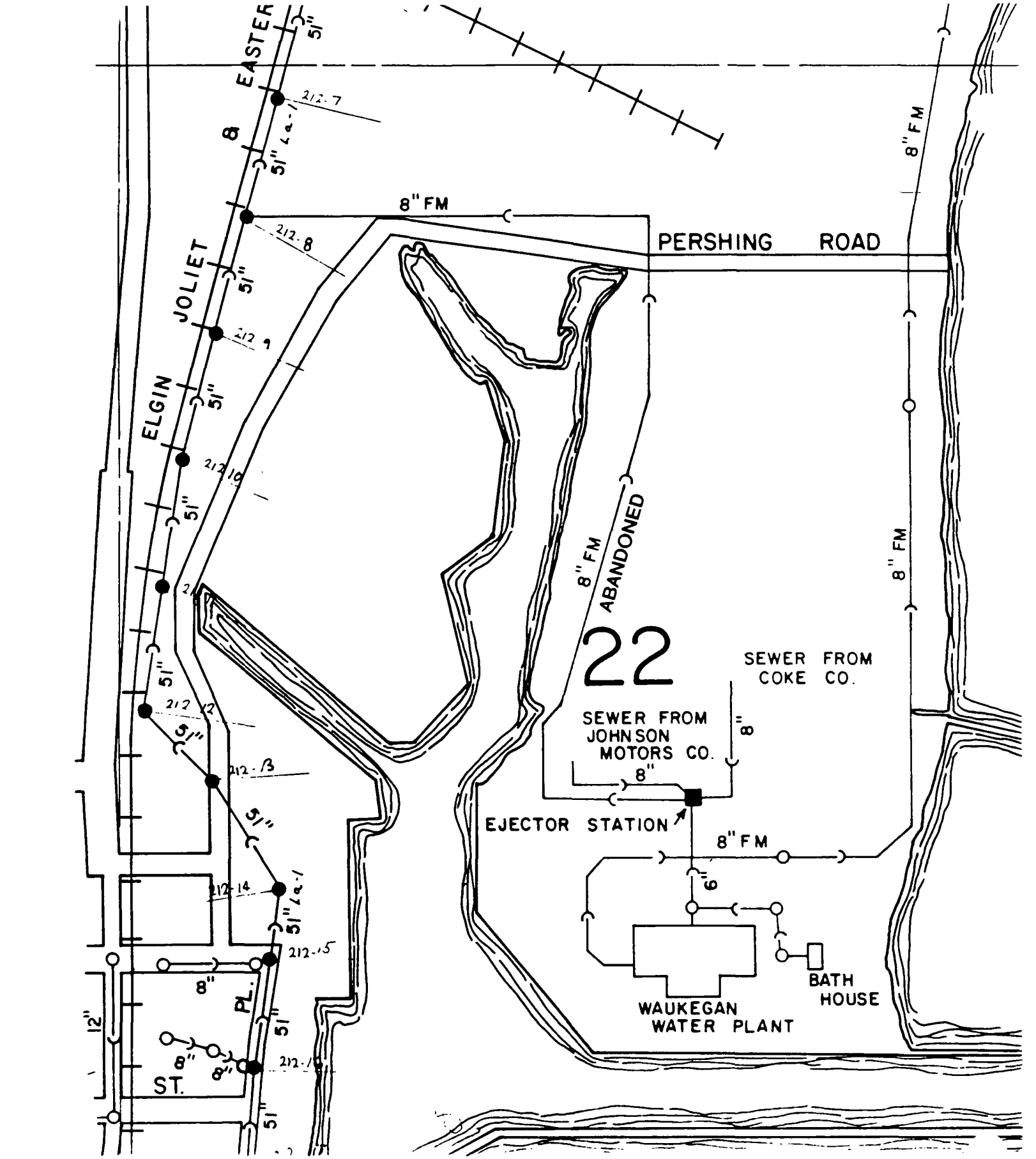

Figure 2-D-4

NORTH SHORE SANITARY SEWER UTILITY LOCATION

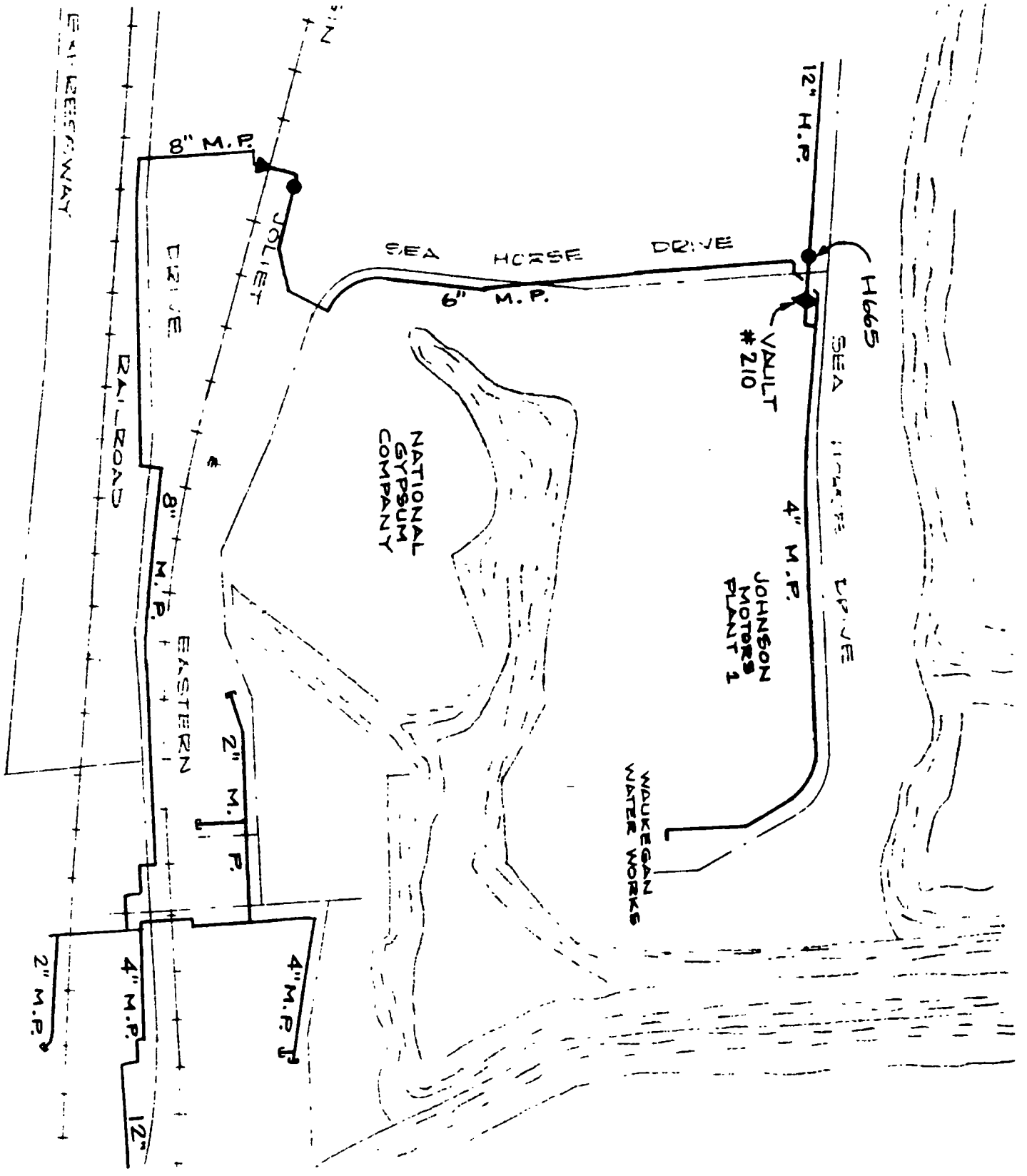

Figure 2-D-5

NATURAL GAS UTILITY LOCATION

Appendix 3-A

Waukegan Harbor Superfund Site
Geologic/Hydrogeologic Data

Warzyn Pilot Boring Logs

Warzyn Soil Boring Logs

Canonie Soil Boring Logs

Warzyn Soil Coring Logs

Warzyn Well/Piezometer Logs

Canonie Well/Piezometer Logs

JRB/Warzyn Hydraulic Conductivity Test Results

JRB Water Level Measurements

Canonie Physical Soil Test Results

Canonie Hydraulic Conductivity Estimates

Waukegan Harbor Superfund Site
Geologic/Hydrogeologic Data

SDMS US EPA Region V

Imagery Insert Form

Some images in this document may be illegible or unavailable in SDMS.
Please see reason(s) indicated below:

☐ Illegible due to bad source documents. Image(s) in SDMS is equivalent to hard copy.

Specify Type of Document(s) / Comments:

☐ Includes ___ COLOR or RESOLUTION variations.
Unless otherwise noted, these pages are available in monochrome. The source document page(s) is more legible than the images. The original document is available for viewing at the Superfund Records Center.

Specify Type of Document(s) / Comments:

☐ Confidential Business Information (CBI).
This document contains highly sensitive information. Due to confidentiality, materials with such information are not available in SDMS. You may contact the EPA Superfund Records Manager if you wish to view this document.

Specify Type of Document(s) / Comments:

☒ Unscannable Material:
Oversized __x__ or ____ Format.
Due to certain scanning equipment capability limitations, the document page(s) is not available in SDMS. .

Specify Type of Document(s) / Comments:

☐ Document is available at the EPA Region 5 Records Center.

Specify Type of Document(s) / Comments:

Warzyn Pilot Boring Logs

WARZYN ENGINEERING INC

LOG OF TEST BORING

Project: Hydrogeologic Investigation
Outboard Marine Corporation
Location: Waukegan, Illinois

Boring No: 1
Surface Elevation:
Job No.: C 8342
Sheet: 1 of 1

1409 EMIL STREET • P.O. BOX 9538, MADISON, WIS. 53715 • TEL (608) 257-4848

SAMPLE						VISUAL CLASSIFICATION and Remarks	SOIL PROPERTIES				
Recovery			Moisture				q_u	W	LL	PL	D
No.	Type	↓	↓	N	Depth						
1	SS	X	M	29		Fill Material; Brown Fine to Coarse SAND, Little Gravel, Little Silt & Clay (SP-SM)					
2	SS	X	W	32	5						
3	SS	X	W	22		Dark Gray Fine SAND, Trace Silt & Fiberous Organic Material (SP)					
						End Boring at 7.5'					
					10						
					15						
					20						
					25						
					30						
					35						
					40						

WATER LEVEL OBSERVATIONS

While Drilling: 3.5
Upon Completion of Drilling:
Time After Drilling: ½ hour
Depth to Water: 3.4
Depth to Cave In:

GENERAL NOTES

Start 7/18/79 Complete 7/18/79
Crew Chief JWG. Rig CME 55-1
Drilling Method: Washbore

WARZYN ENGINEERING INC

LOG OF TEST BORING

Project: Hydrogeologic Investigation
Outboard Marine Corporation
Location: Waukegan, Illinois

Boring No: 2A
Surface Elevation:
Job No.: C-8342
Sheet: 1 of 1

1409 EMIL STREET • P.O. BOX 9538, MADISON, WIS 53715 • TEL (608) 257-4848

SAMPLE						VISUAL CLASSIFICATION and Remarks	SOIL PROPERTIES				
Recovery			Moisture								
No	Type	▼	▼	N	Depth		Qu	W	LL	PL	D
					5	See Log of Test Boring #2C					
					10	End Boring at 8.5'					
					15						
					20						
					25						
					30						
					35						
					40						

WATER LEVEL OBSERVATIONS

While Drilling
Upon Completion of Drilling
Time After Drilling
Depth to Water
Depth to Cave In

GENERAL NOTES

Start 7/19/79 Complete 7/19/79
Crew Chief JWG Rig CME 55
Drilling Method Washbore

WARZYN ENGINEERING INC

LOG OF TEST BORING

Project: Hydrogeologic Investigation
Outboard Marine Corporation
Location: Waukegan, Illinois

Boring No: 2B
Surface Elevation:
Job No.: C 8342
Sheet: 1 of 1

1409 EMIL STREET · P.O. BOX 9538, MADISON, WIS 53715 · TEL (608) 257-4848

SAMPLE						VISUAL CLASSIFICATION and Remarks	SOIL PROPERTIES				
Recovery			Moisture								
No.	Type	▼	▼	N	Depth		q_u	W	LL	PL	D
					5	See Log of Test Boring #2C					
					10						
					15						
					20	End Boring at 20'					
					25						
					30						
					35						
					40						

WATER LEVEL OBSERVATIONS

While Drilling
Upon Completion of Drilling
Time After Drilling
Depth to Water
Depth to Cave In

GENERAL NOTES

Start 7/20/79 Complete 7/20/79
Crew Chief JWG Rig CME 55-1
Drilling Method Washbore

WARZYN ENGINEERING INC

LOG OF TEST BORING

Project: Hydrogeologic Investigation
Outboard Marine Corporation
Location: Waukegan, Illinois

Boring No: 2C
Surface Elevation:
Job No: C 8342
Sheet: 1 of 1

1409 EMIL STREET • P.O. BOX 9538, MADISON, WIS 53715 • TEL (608) 257-4848

SAMPLE No.	Type	Recovery	Moisture	N	Depth	VISUAL CLASSIFICATION and Remarks	Qu	W	LL	PL	D
						Fill Material; Brown Fine to Coarse SAND, Trace Silt (SP)					
1	SS	X	W	18							
2	SS	X	W	27	5	Gray-Brown Fine to Coarse SAND, Little Gravel, Trace Silt and Clay (SP)					
3	SS	X	W	25							
4	SS	X	W	21	10						
5	SS	X	W	21	15						
6	SS	X	W	25	20	Gray-Brown Fine SAND, Little Silt & Clay (SP-SM)					
7	SS	X	W	30	25						
8	SS	X	W	30	30						
						Gray SILT, Trace Clay, Trace Sand (ML)					
9	SS	X	W	50/9"	35				2.0	18.9	
						End Boring at 35'					
					40	* Dark Gray Fine SAND, Fibrous Organic Material (SP)					

WATER LEVEL OBSERVATIONS

While Drilling: 3.2
Upon Completion of Drilling:
Time After Drilling: ½ hour
Depth to Water: 3.2
Depth to Cave In:

GENERAL NOTES

Start: 7/19/79 Complete: 7/1[illegible]
Crew Chief: JWG Rig: CME 55
Drilling Method: Washbore

WARZYN ENGINEERING INC

LOG OF TEST BORING

Project: Hydrogeologic Investigation
Outboard Marine Corporation
Location: Waukegan, Illinois

Boring No. 3
Surface Elevation
Job No C 8342
Sheet 1 of 1

1409 EMIL STREET • P.O. BOX 9538, MADISON, WIS. 53715 • TEL. (608) 257-4848

SAMPLE No	Type	Recovery ▼	Moisture ▼	N	Depth	VISUAL CLASSIFICATION and Remarks	SOIL PROPERTIES Qu	W	LL	PL	D
1	SS	X	M	14		Fill Material; Gray Fine SAND, Trace to Little Silt and Clay (SP-SM)					
2	SS	X	M	20	5	Ash Fill, 4-5'					
3	SS	X	M	35							
4	SS	X	W	14	10	Gray-Brown Fine SAND, Trace Silt & Clay (SP)					
						End Boring at 10'					
					15						
					20						
					25						
					30						
					35						
					40						

WATER LEVEL OBSERVATIONS

While Drilling 7'6"
Upon Completion of Drilling
Time After Drilling ¼ hour
Depth to Water 8.0
Depth to Cave In

GENERAL NOTES

Start 7/23/79 Complete 7/23/79
Crew Chief JWG Rig CME 55-1
Drilling Method Washbore

WARZYN ENGINEERING INC

LOG OF TEST BORING

Project: Hydrogeologic Investigation
Outboard Marine Corporation
Location: Waukegan, Illinois

Boring No: 4A
Surface Elevation:
Job No.: C 8342
Sheet: 1 of 1

1409 EMIL STREET • P.O. BOX 9538, MADISON, WIS 53715 • TEL (608) 257-4848

SAMPLE						VISUAL CLASSIFICATION and Remarks	SOIL PROPERTIES				
Recovery			Moisture								
No.	Type	▼	▼	N	Depth		q_u	W	LL	PL	D
					5	See Log of Test Boring #4C					
					10	End Boring at 8.5'					
					15						
					20						
					25						
					30						
					35						
					40						

WATER LEVEL OBSERVATIONS

While Drilling
Upon Completion of Drilling
Time After Drilling: ½ hour
Depth to Water
Depth to Cave In

GENERAL NOTES

Start: 7/23/79 Complete: 7/23/79
Crew Chief: JWG Rig: CME 55
Drilling Method: Washbore

W-1

WARZYN ENGINEERING INC

LOG OF TEST BORING

Project: Hydrogeologic Investigation
Outboard Marine Corporation
Location: Waukegan, Illinois

Boring No: 4B
Surface Elevation:
Job No: C 8342
Sheet: 1 of 1

1409 EMIL STREET • P.O BOX 9538, MADISON, WIS 53715 • TEL (608) 257-4848

SAMPLE						VISUAL CLASSIFICATION and Remarks	SOIL PROPERTIES				
Recovery		Moisture									
No.	Type	▼	▼	N	Depth		q_u	W	LL	PL	D
					5	See Log of Test Boring #4C					
					10						
					15						
					20	End Boring at 20'					
					25						
					30						
					35						
					40						

WATER LEVEL OBSERVATIONS

While Drilling
Upon Completion of Drilling
Time After Drilling ½ hour
Depth to Water
Depth to Cave In

GENERAL NOTES

Start 7/24/79 Complete 7/24/79
Crew Chief JWG. Rig CME 55-1
Drilling Method Washbore

WARZYN ENGINEERING INC

LOG OF TEST BORING

Project: Hydrogeologic Investigation
Outboard Marine Corporation
Location: Waukegan, Illinois

Boring No: 4C
Surface Elevation:
Job No: C 8342
Sheet: 1 of 1

1408 EMIL STREET · P.O BOX 9538, MADISON, WIS. 53715 · TEL. (608) 257-4848

SAMPLE No.	Type	Recovery	Moisture	N	Depth	VISUAL CLASSIFICATION and Remarks	SOIL PROPERTIES qu	W	LL	PL	D
1	SS	X	M	12		Fill Material; Brown Fine to Medium SAND, Trace Silt, Trace Gravel (SP)					
2	SS	X	W	39	5	Gray-Brown Fine to Coarse SAND, Some Gravel, Trace Silt & Clay (SP-SM)					
3	SS	X	W	20							
4	SS	X	W	43	10	Gray Fine SAND, Trace to Little Silt & Clay, Trace Gravel (SP-SM)					
5	SS	X	W	24	15						
6	SS	X	W	43	20						
7	SS	X	W	46	25						
8	SS	X	W	84/6"	30	Gray SILT, Some Clay (ML)	4.5+				
						End Boring at 30'					
					35						
					40						

WATER LEVEL OBSERVATIONS

While Drilling: 2'6"
Upon Completion of Drilling:
Time After Drilling: ½ hour
Depth to Water:
Depth to Cave In:

GENERAL NOTES

Start: 7/24/79 Complete: 7/24/79
Crew Chief: JWG Rig: CME 55
Drilling Method: Washbore

WARZYN ENGINEERING INC

LOG OF TEST BORING

Project: Hydrogeologic Investigation
Outboard Marine Corporation
Location: Waukegan, Illinois

Boring No: 4B
Surface Elevation:
Job No.: C 8342
Sheet: 1 of 1

1409 EMIL STREET • P.O. BOX 9538, MADISON, WIS 53715 • TEL (608) 257-4848

SAMPLE						VISUAL CLASSIFICATION and Remarks	SOIL PROPERTIES				
Recovery			Moisture								
No.	Type	▼	▼	N	Depth		q_u	W	LL	PL	D
					5	See Log of Test Boring #4C					
					10						
					15						
					20						
					20	End Boring at 20'					
					25						
					30						
					35						
					40						

WATER LEVEL OBSERVATIONS

While Drilling
Upon Completion of Drilling
Time After Drilling ½ hour
Depth to Water
Depth to Cave In

GENERAL NOTES

Start 7/24/79 Complete 7/24/79
Crew Chief JWG Rig CME 55-1
Drilling Method Washbore

WARZYN ENGINEERING INC

LOG OF TEST BORING

Project: Hydrogeologic Investigation
Outboard Marine Corporation
Location: Waukegan, Illinois

Boring No: 4C
Surface Elevation:
Job No: C 8342
Sheet: 1 of 1

1409 EMIL STREET · P.O BOX 9538, MADISON, WIS. 53715 · TEL. (608) 257-4848

SAMPLE No.	Type	Recovery ↓	Moisture ↓	N	Depth	VISUAL CLASSIFICATION and Remarks	SOIL PROPERTIES Qu	W	LL	PL	D
						Fill Material; Brown Fine to Medium SAND, Trace Silt, Trace Gravel (SP)					
1	SS	X	M	12							
						Gray-Brown Fine to Coarse SAND, Some Gravel, Trace Silt & Clay (SP-SM)					
2	SS	X	W	39	5						
3	SS	X	W	20							
						Gray Fine SAND, Trace to Little Silt & Clay, Trace Gravel (SP-SM)					
4	SS	X	W	43	10						
5	SS	X	W	24	15						
6	SS	X	W	43	20						
7	SS	X	W	46	25						
						Gray SILT, Some Clay (ML)					
8	SS	X	W	84/6"	30		4.5+				
						End Boring at 30'					
					35						
					40						

WATER LEVEL OBSERVATIONS

While Drilling: 2'6"
Upon Completion of Drilling:
Time After Drilling: ½ hour
Depth to Water:
Depth to Cave In:

GENERAL NOTES

Start: 7/24/79 Complete: 7/24/79
Crew Chief: JWG Rig: CME 55
Drilling Method: Washbore

WARZYN ENGINEERING INC

LOG OF TEST BORING

Project Hydrogeologic Investigation
Outboard Marine Corporation
Location Waukegan, Illinois

Boring No 5
Surface Elevation
Job No. C 8342
Sheet 1 of 1

1409 EMIL STREET · P O. BOX 9538, MADISON, WIS 53715 · TEL. (608) 257-4848

SAMPLE						VISUAL CLASSIFICATION and Remarks	SOIL PROPERTIES				
Recovery			Moisture								
No.	Type	▼	▼	N	Depth		Qu	W	LL	PL	D
1	SS	X	M	14		Clay Layer 2-2.5'					
2	SS	X	W	2	5	Fill Material; Gray Fine SAND, Trace Gravel, Trace Silt & Clay (SP) Organic Layer 5-5.5'					
3	SS	X	W	3		Clay Layer 9-9.5'					
4	SS	X	W	2	10	End Boring at 9'					
					15						
					20						
					25						
					30						
					35						
					40						

WATER LEVEL OBSERVATIONS

While Drilling 3.0
Upon Completion of Drilling
Time After Drilling ½ hour
Depth to Water
Depth to Cave In

GENERAL NOTES

Start 7/25/79 Complete 7/25/79
Crew Chief JWG Rig CME 55-1
Drilling Method Washbore

WARZYN ENGINEERING INC

LOG OF TEST BORING

Project: Hydrogeologic Investigation
Outboard Marine Corporation
Location: Waukegan, Illinois

Boring No: 6
Surface Elevation:
Job No: C 8342
Sheet: 1 of 1

1409 EMIL STREET • P.O. BOX 9538, MADISON, WIS. 53715 • TEL. (608) 257-4848

SAMPLE No.	Type	Recovery	Moisture	N	Depth	VISUAL CLASSIFICATION and Remarks	SOIL PROPERTIES Qu	W	LL	PL	D
1	SS	X	M	19		Fill Material; Fine to Coarse SAND, Trace Silt & Clay, Trace Gravel, Occasional Brick Chip (SP)					
2	SS	X	W	24	5						
3	SS	X	W	37		Gray Fine SAND, Trace Silt & Clay (SP)					
4	SS	X	W	33	10						
						End Boring at 10'					
					15						
					20						
					25						
					30						
					35						
					40						

WATER LEVEL OBSERVATIONS

While Drilling: 3.7
Upon Completion of Drilling:
Time After Drilling: ½ hour
Depth to Water:
Depth to Cave In:

GENERAL NOTES

Start: 7/25/79 Complete: 7/25/7
Crew Chief: JWG Rig: CME 55-
Drilling Method: Washbore

WARZYN ENGINEERING INC

LOG OF TEST BORING

Project: Hydrogeologic Investigation
Outboard Marine Corporation
Location: Waukegan, Illinois

Boring No: 7A
Surface Elevation:
Job No: C 8342
Sheet: 1 of 1

1409 EMIL STREET • P.O. BOX 9538, MADISON, WIS 53715 • TEL. (608) 257-4848

SAMPLE						VISUAL CLASSIFICATION and Remarks	SOIL PROPERTIES				
Recovery			Moisture								
No.	Type	▼	▼	N	Depth		Qu	W	LL	PL	D
						See Log of Test Boring #7C					
					5						
					10	End Boring at 10'					
					15						
					20						
					25						
					30						
					35						
					40						

WATER LEVEL OBSERVATIONS

While Drilling
Upon Completion of Drilling
Time After Drilling
Depth to Water
Depth to Cave In

GENERAL NOTES

Start 7/26/79 Complete 7/26/79
Crew Chief JWG Rig CME 55-1
Drilling Method Washbore

WARZYN ENGINEERING INC

LOG OF TEST BORING

Project: Hydrogeologic Investigation
Outboard Marine Corporation
Location: Waukegan, Illinois

Boring No: 7B
Surface Elevation:
Job No: C 8342
Sheet: 1 of 1

1409 EMIL STREET · P.O. BOX 9538, MADISON, WIS 53715 · TEL (608) 257-4848

SAMPLE						VISUAL CLASSIFICATION and Remarks	SOIL PROPERTIES				
Recovery			Moisture								
No	Type	▼	▼	N	Depth		Qu	W	LL	PL	D
					5	See Log of Test Boring #7C					
					10						
					15	End Boring at 15'					
					20						
					25						
					30						
					35						
					40						

WATER LEVEL OBSERVATIONS

While Drilling
Upon Completion of Drilling
Time After Drilling
Depth to Water
Depth to Cave In

GENERAL NOTES

Start 7/26/79 Complete 7/26/79
Crew Chief JWG Rig CME 55
Drilling Method Washbore

WARZYN ENGINEERING INC

LOG OF TEST BORING

Project: Hydrogeologic Investigation
Outboard Marine Corporation
Location: Waukegan, Illinois

Boring No: 7C
Surface Elevation:
Job No: C 8342
Sheet: 1 of 1

1409 EMIL STREET • P.O. BOX 9538, MADISON, WIS 53715 • TEL. (608) 257-4848

SAMPLE No.	Type	Recovery	Moisture	N	Depth	VISUAL CLASSIFICATION and Remarks	SOIL PROPERTIES Qu	W	LL	PL	D
1	SS	X	M	7		Brown Fine to Medium SAND, Trace Silt (SP)					
2	SS	X	W	19	5	Gray Fine SAND, Trace Silt & Clay, Trace to Little Gravel (SP,SM-SP,SM)					
3	SS	X	W	26							
4	SS	X	W	21	10						
5	SS	X	W	24	15						
6	SS	X	W	50/10"	20						
7	SS	X	M	74	25	SILT, Some Clay, Sand, Trace Gravel (ML)	4.5+		16.3	12.6	
						End Boring at 25'					
					30						
					35						
					40						

WATER LEVEL OBSERVATIONS

While Drilling: 25
Upon Completion of Drilling:
Time After Drilling: ½ hour
Depth to Water:
Depth to Cave In:

GENERAL NOTES

Start: 7/26/78 Complete: 7/26/78
Crew Chief: JWG Rig: CME 55-1
Drilling Method: Washbore

WARZYN ENGINEERING INC

LOG OF TEST BORING

Project: Hydrogeologic Investigation
Outboard Marine Corporation
Location: Waukegan, Illinois

Boring No: 8
Surface Elevation:
Job No: C 8342
Sheet: 1 of 1

1409 EMIL STREET · P.O. BOX 9538, MADISON, WIS 53715 · TEL. (608) 257-4848

SAMPLE						VISUAL CLASSIFICATION and Remarks	SOIL PROPERTIES				
Recovery			Moisture								
No.	Type	↓	↓	N	Depth		Qu	W	LL	PL	D
						Fill Material; Foundry SAND, Concrete Sand and Gravel, Trace Silt & Clay (SW-SM)					
1	SS	X	W	108	5						
2	SS	X	W	3		* Brownish-Black Fine SAND, Trace Silt (SP)					
					10	End Boring at 7.5'					
						* Brownish-Black Organic SILT, Fibrous Material (ML)					
					15						
					20						
					25						
					30						
					35						
					40						

WATER LEVEL OBSERVATIONS

While Drilling: 4'5"
Upon Completion of Drilling:
Time After Drilling: ½ hour
Depth to Water: 4'6"
Depth to Cave In:

GENERAL NOTES

Start: 7/17/79 Complete: 7/17/79
Crew Chief: JWG. Rig: CME 55
Drilling Method: Auger

WARZYN ENGINEERING INC

LOG OF TEST BORING

Project: Hydrogeologic Investigation
Outboard Marine Corporation
Location: Waukegan, Illinois

Boring No: 9
Surface Elevation:
Job No.: C 8342
Sheet: 1 of 1

1409 EMIL STREET • P.O. BOX 9538, MADISON, WIS 53715 • TEL. (608) 257-4848

SAMPLE No.	Type	Recovery	Moisture	N	Depth	VISUAL CLASSIFICATION and Remarks	SOIL PROPERTIES qu	W	LL	PL	D
1	SS	X	M	17		Fill Material; Gray-Brown Fine to Coarse SAND, Some Silt & Clay, Little Gravel, Occasional Cinders and Glass (SM)					
2	SS	X	W	4	5						
3	SS	X	W	9							
4	SS	X	W	15	10	Gray Fine to Coarse SAND, Trace Silt & Clay (SP)					
5	SS	X	W	14	15						
6	SS	X	W	42	20						
7	SS	X	M	41	25	Gray SILT, Some Clay, Trace Sand (ML-CL)	4.5				
							4.5+		21.2	16.2	
						End Boring at 27.5'					
8	SS	X	M	78	30						
					35						
					40						

WATER LEVEL OBSERVATIONS

While Drilling: 3'7"
Upon Completion of Drilling:
Time After Drilling: ¼ hour
Depth to Water:
Depth to Cave In:

GENERAL NOTES

Start: 7/17/79 Complete: 7/17/79
Crew Chief: JWG Rig: CME 55-1
Drilling Method: Washbore

WARZYN ENGINEERING INC

LOG OF TEST BORING

Project: Subsurface Investigation
Outboard Marine Corporation
Location: Waukegan, Illinois

Boring No. MW-1
Surface Elevation 583.5
Job No. C 9177
Sheet 1 of 1

1409 EMIL STREET • P.O BOX 9538, MADISON, WIS. 53715 • TEL. (608) 257-4848

SAMPLE No.	Type	Recovery	Moisture	N	Depth	VISUAL CLASSIFICATION and Remarks	SOIL PROPERTIES Qu	W	LL	PL	D
1	SS	1'4"	M	13		Light Gray & Brown Very Fine to Fine SAND, Trace Silt and Clay					
2	SS	8"	W	24	5						
3	SS	10"	W	34	10						
						End Boring at 10'					
					15						
					20						
					25						
					30						
					35						
					40						

WATER LEVEL OBSERVATIONS

While Drilling
Upon Completion of Drilling
Time After Drilling ½ hour
Depth to Water 2'6"±
Depth to Cave In

GENERAL NOTES

Start 5/20/80 Complete 5/20
Crew Chief JWG Rig 5
Drilling Method Hollow Stem Auger

WARZYN ENGINEERING INC

LOG OF TEST BORING

Project: Subsurface Investigation
Outboard Marine Corporation
Location: Waukegan, Illinois

Boring No. MW-2
Surface Elevation 583.4
Job No. C 9177
Sheet 1 of 1

1409 EMIL STREET • P.O BOX 9538, MADISON, WIS. 53715 • TEL. (608) 257-4848

SAMPLE						VISUAL CLASSIFICATION and Remarks	SOIL PROPERTIES				
Recovery			Moisture								
No.	Type	↓	↓	N	Depth		Qu	W	LL	PL	D
						See MW-1 for Classification of 0' to 10'					
					5						
					10	Gray Very Fine to Fine SAND, Trace Silt & Clay, Trace Gravel, Occasional Coarse Sand Layers					
1	SS	10"	W	30	15						
						End Boring at 15'					
					20						
					25						
					30						
					35						
					40						

WATER LEVEL OBSERVATIONS

While Drilling
Upon Completion of Drilling
Time After Drilling ½ hour
Depth to Water 2'6"±
Depth to Cave In

GENERAL NOTES

Start 5/21/80 Complete 5/21/80
Crew Chief JWG Rig 55-1
Drilling Method Hollow Stem Auger

ARZYN ENGINEERING INC

LOG OF TEST BORING

Project: Subsurface Investigation
Outboard Marine Corporation
Location: Waukegan, Illinois

Boring No: MW-3
Surface Elevation: 583.4
Job No.: C 9177
Sheet: 1 of 1

1409 EMIL STREET • P.O. BOX 9538, MADISON, WIS. 53715 • TEL. (608) 257-4848

SAMPLE Type	Recovery	Moisture	N	Depth	VISUAL CLASSIFICATION and Remarks	SOIL PROPERTIES qu	W	LL	PL	D
				5	See MW-1 & 2 for Classification for 0' to 15'					
				10						
				15						
1 SS	1'1"	W	32	20	Light Gray Very Fine to Fine SAND, Trace Silt & Clay, Occasional Gravel Coarse Sand Layers					
2 SS	7"	W	21	25	End Boring at 25'					
				30						
				35						
				40						

WATER LEVEL OBSERVATIONS

While Drilling: _____
Upon Completion of Drilling: _____
Time After Drilling: ½ hour
Depth to Water: 2'6"±
Cave In: _____

GENERAL NOTES

Start: 5/21/80 Complete: 5/21/80
Crew Chief: JWG Rig: CME-55
Drilling Method: Hollow Stem Auger

WARZYN ENGINEERING INC

LOG OF TEST BORING

Project: Subsurface Investigation
Outboard Marine Corporation
Location: Waukegan, Illinois

Boring No. MW-4
Surface Elevation 583.1
Job No. C 9177
Sheet 1 of 1

1409 EMIL STREET • P.O. BOX 9538, MADISON, WIS. 53715 • TEL. (608) 257-4848

SAMPLE						VISUAL CLASSIFICATION and Remarks	SOIL PROPERTIES				
Recovery			Moisture								
No.	Type	↓	↓	N	Depth		q_u	W	LL	PL	D
						Brown & Black Fine to Medium SAND, Trace Organic Material, Some to Little Silt & Clay					
1	SS	X	M	10							
						Black Very Fine to Fine SAND, Some to Little Silt and Clay					
2	SS	X	W	12	5						
3	SS	X	W	12	10						
						End Boring at 10'					
					15						
					20						
					25						
					30						
					35						
					40						

WATER LEVEL OBSERVATIONS

While Drilling 2'3"
Upon Completion of Drilling
Time After Drilling
Depth to Water
Depth to Cave In

GENERAL NOTES

Started 5/21/80 Completed 5/21/80
Crew Chief St. Dennis Rig 750
Drilling Method Hollow Stem Auger

ZYN

ERING INC

LOG OF TEST BORING

Project: Subsurface Investigation
Outboard Marine Corporation
Location: Waukegan, Illinois

Boring No: MW-5
Surface Elevation: 583.0
Job No.: C 9177
Sheet: 1 of 1

1409 EMIL STREET • P.O. BOX 9538, MADISON, WIS. 53715 • TEL. (608) 257-4848

SAMPLE					VISUAL CLASSIFICATION and Remarks	SOIL PROPERTIES				
	Recovery	Moisture	N	Depth		Qu	W	LL	PL	D
	1'4"	W	10		Light Gray & Brown Very Fine to Fine SAND Trace Silt and Clay					
S	1'2"	W	26	5						
SS	10"	W	29	10						
					End Boring at 10'					
				15						
				20						
				25						
				30						
				35						
				40						

WATER LEVEL OBSERVATIONS

While Drilling
Upon Completion of Drilling
Time After Drilling: ½ hour
Depth to Water: 1.4'

GENERAL NOTES

Start: 5/20/80 Complete: 5/20/80
Crew Chief: JWG Rig: 55-1
Drilling Method: Hollow Stem Auger

WARZYN ENGINEERING INC

LOG OF TEST BORING

Project: Subsurface Investigation
Outboard Marine Corporation
Location: Waukegan, Illinois

Boring No. MW-6
Surface Elevation 584.7
Job No. C 9177
Sheet 1 of 1

1409 EMIL STREET • P.O. BOX 9538, MADISON, WIS 53715 • TEL. (608) 257-4848

SAMPLE						VISUAL CLASSIFICATION and Remarks	SOIL PROPERTIES				
Recovery			Moisture								
No.	Type	↓	↓	N	Depth		q_u	W	LL	PL	D
1	SS	X	M	6		Tan Fine to Medium SAND, Little to Trace Silt and Clay, Trace Fine to Medium Gravel					
2	SS	X	W	26	5	Streaked Black to Gray Very Fine to Medium SAND, Trace Organic Material, Some to Little Silt and Clay					
3	SS	X	W	36	10						
						End Boring at 11'					
					15						
					20						
					25						
					30						
					35						
					40						

WATER LEVEL OBSERVATIONS

While Drilling
Upon Completion of Drilling
Time After Drilling
Depth to Water
Depth to Cave In

GENERAL NOTES

Started 5/21/80 Completed 5/21/80
Crew Chief St. Dennis Rig 750
Drilling Method Hollow Stem Auger

6

WARZYN ENGINEERING INC

LOG OF TEST BORING

Project: Subsurface Investigation
Outboard Marine Corporation
Location: Waukegan, Illinois

Boring No. MW-7
Surface Elevation 584.5
Job No. C-9177
Sheet 1 of 1

1409 EMIL STREET • P.O. BOX 9538, MADISON, WIS. 53715 • TEL (608) 257-4848

SAMPLE No.	Type	Recovery	Moisture	N	Depth	VISUAL CLASSIFICATION and Remarks	SOIL PROPERTIES q_u	W	LL	PL	D
						3" Asphalt					
1	SS	X	W	14		FILL: Brown Very Fine to Coarse SAND, Trace Silt & Clay, Trace Gravel					
2	SS	11"	W	28	5	Brown Very Fine to Medium SAND, Trace Silt & Clay, Trace Gravel					
3	SS	9"	W	36	10	End Boring at 10'					
					15						
					20						
					25						
					30						
					35						
					40						

WATER LEVEL OBSERVATIONS

While Drilling
Upon Completion of Drilling
Time After Drilling ½ hour
Depth to Water 3'6"±
Depth to Cave In

GENERAL NOTES

Start 5/23/80 Complete 5/23/80
Crew Chief JWG Rig 5
Drilling Method Hollow Stem Auger

Warzyn Soil Boring Logs

WARZYN ENGINEERING INC

LOG OF TEST BORING

Project: Subsurface Investigation, Outboard Marine Corporation
Location: Waukegan, Illinois

Boring No: B-1
Surface Elevation:
Job No: C 9177
Sheet: 1 of 1

1409 EMIL STREET • P O BOX 9538, MADISON WIS 53715 • TEL (608) 257-4848

SAMPLE No	Type	Recovery	Moisture	N	Depth	VISUAL CLASSIFICATION and Remarks	SOIL PROPERTIES Qu	W	LL	PL	D
1	SS	X	M	9		Tan Very Fine to Fine SAND, Trace to Little Silt and Clay					
2	SS	X	W	12	5						
3	SS	X	W	16	10	Gray Very Fine to Fine SAND, Trace Coarse Sand, Trace to Some Silt and Clay					
4	SS	X	W	30	15						
5	SS	X	W	26	20						
6	SS	X	W	12	25						
7	SS	X	W	9		Gray Very Fine to Fine SAND, Trace to Some Silt and Clay					
8	SS	12"	W	14	30	Gray SILT, Trace Clay, Trace Sand	4.0				
						End Boring at 30'					
					35						
					40						

WATER LEVEL OBSERVATIONS

While Drilling: 13"
Upon Completion of Drilling:
Time After Drilling:
Depth to Water:
Depth to Cave In:

GENERAL NOTES

Start: 5/22/80 Complete: 5/22/80
Crew Chief: St. Dennis Rig: 750
Drilling Method: Hollow Stem Auger

ARZYN ENGINEERING INC

1409 EMIL STREET · P O BOX 9538 MADISON WIS 53715 · TEL (608) 257-4848

LOG OF TEST BORING

Project: Subsurface Investigation
Outboard Marine Corporation
Location: Waukegan, Illinois

Boring No. B-2
Surface Elevation
Job No. C 9177
Sheet 1 of 1

SAMPLE						VISUAL CLASSIFICATION and Remarks	SOIL PROPERTIES				
	Type	Recovery	Moisture	N	Depth		Qu	W	LL	PL	D
	SS	X	M	6		Tan Very Fine to Medium SAND					
	SS	X	W	16	5	Gray Very Fine to Medium SAND, Trace Organic Material, Trace to Some Silt and Clay					
3	SS	X	W	13	10	Denser					
4	SS	X	W	37	15						
5	SS	X	W	30	20						
6	SS	X	W	14	25						
7	SS	X	W	24	30						
						GRAVEL, Some Fine to Coarse Sand					
8	SS	X	W	100	35	Gray SILT, Trace Clay, Trace Sand	4.5+				
						End Boring at 35'					
					40	Note: 32½' Drove a Rock No Recovery					

WATER LEVEL OBSERVATIONS

While Drilling 39"
Upon Completion of Drilling
Time After Drilling
Depth to Water
Cave In

GENERAL NOTES

Start 5/23/80 Complete 5/23/8
Crew Chief St. Dennis Rig 750
Drilling Method Hollow Stem Auger

WARZYN ENGINEERING INC

LOG OF TEST BORING

Project: Subsurface Investigation
Outboard Marine Corporation
Location: Waukegan, Illinois

Boring No: B-3
Surface Elevation: 583.2
Job No: C.9177
Sheet: 1 of 1

1409 EMIL STREET · P.O. BOX 9538 MADISON WIS 53715 · TEL (608) 257-4848

SAMPLE						VISUAL CLASSIFICATION and Remarks	SOIL PROPERTIES				
	Recovery		Moisture								
No	Type	▼	▼	N	Depth		Qu	W	LL	PL	D
1	SS	X	M	3		Tan Very Fine to Medium SAND					
2	SS	X	W	14	5	Gray Very Fine to Fine SAND, Trace Silt and Clay					
3	SS	X	W	25	10						
4	SS	X	W	20	15						
5	SS	X	W	21	20	Gray Very Fine to Fine SAND, Trace to Little Silt and Clay					
6	SS	X	W	28	25						
7	SS	X	W	63	30	*					
						End Boring at 30'					
					35	* GRAVEL Some Fine to Coarse Sand					
						** Gray SILT, Trace Clay, Trace Sand					
					40						

WATER LEVEL OBSERVATIONS

While Drilling: 26"
Upon Completion of Drilling:
Time After Drilling:
Depth to Water:
Depth to Cave In:

GENERAL NOTES

Start: 5/30/80 Complete: 5/30/80
Crew Chief: St. Dennis Rig: 750
Drilling Method: Hollow Stem Auger

2

WARZYN ENGINEERING INC

LOG OF TEST BORING

Project: Subsurface Investigation, Outboard Marine Corporation
Location: Waukegan, Illinois

Boring No: B-4
Surface Elevation: 582.8
Job No: C 9177
Sheet: 1 of 1

1409 EMIL STREET · P.O BOX 9538. MADISON WIS 53715 · TEL (608) 257-4848

SAMPLE						VISUAL CLASSIFICATION and Remarks	SOIL PROPERTIES				
Recovery			Moisture								
No	Type	▼	▼	N	Depth		Qu	W	LL	PL	D
1	SS	X	M	8		Brown & Gray Fine to Medium SAND, Trace to Little Silt, Slightly Organic					
2	SS	X	W	22	5						
3	SS	X	W	8	10	Black Fine to Medium SAND, Trace to Little Silt and Clay					
4	SS	X	W	26	15	Gray Very Fine to Medium SAND, Trace to Some Silt, Scattered 2" to 4" Layers Sandy Silt with Shells, Some Organic Material					
5	SS	X	W	24	20						
6	SS	X	W	12	25						
7	SS	X	W	16	30	Gray SILT, Trace Clay, Trace Sand	4.0				
						End Boring at 32'					
					35						
					40						

WATER LEVEL OBSERVATIONS

While Drilling: 19"
Upon Completion of Drilling:
Time After Drilling:
Depth to Water:
Depth to Cave In:

GENERAL NOTES

Start: 5/21/80 Complete: 5/21/80
Crew Chief: St. Dennis Rig: 750
Drilling Method: Hollow Stem Auger

WARZYN ENGINEERING INC

LOG OF TEST BORING

Project: Subsurface Investigation
Outboard Marine Corporation
Location: Waukegan, Illinois

Boring No: B-5
Surface Elevation: 583.1
Job No: C 9177
Sheet: 1 of 1

1409 EMIL STREET • P O BOX 9538 MADISON, WIS 53715 • TEL (608) 257-4848

SAMPLE No	Type	Recovery	Moisture	N	Depth	VISUAL CLASSIFICATION and Remarks	SOIL PROPERTIES Qu	W	LL	PL	D
1	SS	1'4"	M	11		Tan & Gray Very Fine to Fine SAND, Trace Silt, and Clay					
2	SS	X	W	17	5	Soil Gray Only					
3	SS	7"	W	28	10	6" Layer Gravel, Coarse Sand					
4	SS	1'	W	13	15						
5	SS	1'4"	W	29	20	Lighter Gray					
6	SS	1'5"	W	31	25						
7	SS	1'2"	W	42	30	*					
8	SS	1'1"	M	100		Gray SILT, Trace Clay, Trace Sand					
						End Boring at 31'6"					
					35	* Gray Very Fine to Coarse SAND, Trace to Little Silt and Clay, Trace Gravel					
					40						

WATER LEVEL OBSERVATIONS

While Drilling
Upon Completion of Drilling
Time After Drilling: ½ hour
Depth to Water: 2'6"
Depth to Cave In

GENERAL NOTES

Start: 5/22/80 Complete: 5/22/80
Crew Chief: JWG Rig: 55-1
Drilling Method: Hollow Stem Auger

ARZYN
NEERING INC

LOG OF TEST BORING

Project ..... Subsurface Investigation
Outboard Marine Corporation
Location ..... Waukegan, Illinois

Boring No . B-6
Surface Elevation 584.9
Job No C 9177
Sheet 1 of 1

1409 EMIL STREET • P.O BOX 9538 MADISON, WIS 53715 • TEL (608) 257-4848

SAMPLE						VISUAL CLASSIFICATION and Remarks	SOIL PROPERTIES				
	Recovery		Moisture				q_u	W	LL	PL	D
	Type	#		N	Depth						
	SS	X	M	3		Tan Very Fine to Medium SAND, Trace Silt and Clay					
	SS	X	W	37	5	Gray Very Fine to Fine SAND, Trace Silt and Clay					
3	SS	X	W	32	10						
4	SS	X	W	20	15	Gray Very Fine to Medium SAND, Trace Silt, Scattered 1/8" to 1/4" Seams Black Fine Sand					
5	SS	X	W	34	20	Gray Very Fine to Fine SAND, Trace to Some Silt and Clay, Streaked Black					
6	SS	X	W	30	25	Occasional Shells					
7	SS	X	W	27	30	Layer Coarse Sand Some Large Gravel 29½' to 30'					
8	SS	X	W	34		Gray SILT, Trace Clay, Trace Sand	4.5+				
					35	End Boring at 33.5'					
					40						

WATER LEVEL OBSERVATIONS

While Drilling 37"
Upon Completion of Drilling
Time After Drilling
Depth to Water
Cave In

GENERAL NOTES

Start 6/2/80 Complete 6/2/80
Crew Chief St. Dennis Rig 75
Drilling Method
Hollow Stem Auger

WARZYN ENGINEERING INC

LOG OF TEST BORING

Project: Subsurface Investigation, Outboard Marine Corporation
Location: Waukegan, Illinois

Boring No: B-7
Surface Elevation: 584.9
Job No: C 9177
Sheet: 1 of 1

1409 EMIL STREET · P.O. BOX 9538, MADISON, WIS 53715 · TEL (608) 257-4848

SAMPLE						VISUAL CLASSIFICATION and Remarks	SOIL PROPERTIES				
		Recovery	Moisture								
No	Type	∇	∇	N	Depth		q_u	W	LL	PL	D
1	SS	1'	M	17		Tan Very Fine to Medium SAND, Trace Silt and Clay					
2	SS	1'4"	W	10	5						
3	SS	10"	W	13	10	Gray Very Fine to Fine SAND, Trace to Little Silt and Clay Occasional Coarse Sand, Gravel					
4	SS	X	W	31	15						
5	SS	1'3"	W	50	20						
6	SS	X	W	24	25						
7	SS	1'	W	23	30	GRAVEL Some Fine to Coarse Sand					
8	SS	X	W	103		Gray SILT, Trace Clay, Trace Sand	4.5+/ 4.5+				
					35	End Boring at 33'6"					
					40						

WATER LEVEL OBSERVATIONS

While Drilling
Upon Completion of Drilling
Time After Drilling ½ hour
Depth to Water 4±
Depth to Cave In

GENERAL NOTES

Start 5/22/80 Complete 5/22/80
Crew Chief JWG Rig 55-1
Drilling Method Hollow Stem Auger

2

WARZYN ENGINEERING INC

LOG OF TEST BORING

Project: Subsurface Investigation
Outboard Marine Corporation
Location: Waukegan, Illinois

Boring No: B-8
Surface Elevation: 585.3
Job No: C 9177
Sheet: 1 of 1

1409 EMIL STREET · P O BOX 9538 MADISON WIS 53715 · TEL (608) 257-4848

SAMPLE						VISUAL CLASSIFICATION and Remarks	SOIL PROPERTIES				
		Recovery	Moisture								
No.	Type	▼	▼	N	Depth		qu	W	LL	PL	D
1	SS	X	M	6		FILL: Tan & Gray Mixed Fine to Medium SAND, Trace Silt,					
2	SS	X	W	18	5	Gray & Black Mixed Fine to Coarse SAND, Trace Silt and Clay, Trace Fine Gravel					
3	SS	X	W	28	10	Dark Gray Very Fine to Medium SAND, Trace to Little Silt and Clay					
4	SS	X	W	27	15						
5	SS	X	W	50	20	Lighter Gray with Scattered ½" Seams of Darker Soil of Same Description as Above					
6	SS	X	W	25	25						
7	SS	X	W	100	30	Siltier					
8	SS	X	M	60		Gray SILT, Trace Clay, Trace Sand Many ½" Seams & Streaks, Very Dense Silt	4.5+				
					35	End Boring at 33.5'					
					40						

WATER LEVEL OBSERVATIONS

While Drilling: 46"
Upon Completion of Drilling:
Time After Drilling:
Depth to Water:
Depth to Cave In:

GENERAL NOTES

Start: 6/2/80 Complete: 6/2/80
Crew Chief: St. Dennis Rig: 750
Drilling Method: Hollow Stem Auger

VARZYN ENGINEERING INC

LOG OF TEST BORING

Project ..... Subsurface Investigation .....
..... Outboard Marine Corportation ..
Location ... Waukegan, Illinois .....

Boring No B-9
Surface Elevation 584.2
Job No. ... C 9177 .....
Sheet 1 .... of .. 1 ..

1409 EMIL STREET • P O BOX 9538, MADISON WIS 53715 • TEL (608) 257-4848

SAMPLE						VISUAL CLASSIFICATION and Remarks	SOIL PROPERTIES				
	Recovery		Moisture								
No	Type	▼	▼	N	Depth		Qu	W	LL	PL	D
1	SS	NR	M	-	-	FILL- Fine to Medium SAND, Some to Trace Silt and Gravel *					
2	SS	X	W	16	5	Black Very Fine to Medium SAND. Trace Organic, Trace to Some Silt and Clay					
3	SS	8"	W	30	10	Gray Fine to Medium SAND, Trace to Little Silt & Clay, Trace Gravel					
4	SS	7"	W	33	15						
5	SS	6"	W	32	20	Gray Very Fine to Fine SAND, Trace to Little Silt and Clay					
6	SS	12"	W	25	25						
7	SS	12"	W	22	30						
8	SS	X	W	27	35	Gray SILT, Trace Clay, Trace Sand, Trace Fine Gravel, Scattered Layers Dense Silt	2.5 4.5				
						End Boring at 33.5'					
					40	* Some Wood & Asphalt, No Recovery-Pushed Piece of Asphalt					

WATER LEVEL OBSERVATIONS

While Drilling 22"
Upon Completion of Drilling
Time After Drilling
Depth to Water
Depth to Cave In

GENERAL NOTES

Start 5/22/80 Complete 5/22/80
Crew Chief St. Dennis Rig 750
Drilling Method Hollow Stem Auger

VARZYN ENGINEERING INC

LOG OF TEST BORING

Project: Subsurface Investigation
Outboard Marine Corporation
Location: Waukegan, Illinois

Boring No: S-10
Surface Elevation: 583.8
Job No: C 9177
Sheet: 1 of 1

1409 EMIL STREET • P.O. BOX 9538, MADISON, WIS 53715 • TEL (608) 257-4848

SAMPLE						VISUAL CLASSIFICATION and Remarks	SOIL PROPERTIES				
	Recovery		Moisture								
c	Type	↓	↓	N	Depth	2" Blacktop	Qu	W	LL	PL	D
	SS	1'2"	M	39		FILL: Tan Very Fine to Coarse SAND with Gravel, Trace to Little Silt and Clay					
2	SS	1'2"	W	26	5						
3	SS	6"	W	19	10	Gray Very Fine to Fine SAND, Trace Silt and Clay					
4	SS	1'	W	21	15						
5	SS	1'	W	30	20						
6	SS	9"	W	30	25						
7	SS	1'2"	M	22	30	Gray SILT, Trace Clay, Trace Sand	3.5/ 3.5				
						End Boring at 30'					
					35						
					40						

WATER LEVEL OBSERVATIONS

While Drilling
Upon Completion of Drilling
Time After Drilling: ½ hour
Depth to Water: 4'
Depth to Cave In

GENERAL NOTES

Start: 5/27/80 Complete: 5/27/
Crew Chief: JWG Rig: 55-1
Drilling Method: Hollow Stem Aug

WARZYN ENGINEERING INC

LOG OF TEST BORING

Project: Subsurface Investigation
Outboard Marine Corporation
Location: Waukegan, Illinois

Boring No: B-11
Surface Elevation: 585.4
Job No: C 9177
Sheet: 1 of 1

1409 EMIL STREET · P O BOX 9538, MADISON WIS 53715 · TEL (608) 257-4648

SAMPLE						VISUAL CLASSIFICATION and Remarks	SOIL PROPERTIES				
		Recovery	Moisture								
No	Type			N	Depth		Qu	W	LL	PL	D
						3" Blacktop					
1	SS	1'4"	M	24		FILL: Tan Very Fine to Coarse SAND and Gravel & Stone Chips, Trace of Silt and Clay					
2	SS	1'	W	23	5	Tan to Gray Very Fine to Fine SAND, Trace Silt and Clay					
3	SS	10"	W	27	10						
4	SS	10"	W	42	15	Tan to Gray Very Fine to Fine SAND, Trace Silt and Clay					
5	SS	1'	W	38	20						
6	SS	11"	W	34	25						
						GRAVEL Some Fine to Coarse Sand					
7	SS	1'4"	M	21	30	Gray SILT, Trace Clay, Trace Sand	3.0/3.5				
						End Boring at 30'					
					35						
					40						

WATER LEVEL OBSERVATIONS

While Drilling
Upon Completion of Drilling
Time After Drilling ¼ hour
Depth to Water 3.0'
Depth to Cave In

GENERAL NOTES

Start 5/28/80 Complete 5/28/80
Crew Chief JWG Rig 55-1
Drilling Method Hollow Stem Auger

WARZYN ENGINEERING INC

LOG OF TEST BORING

Project: Subsurface Investigation
Outboard Marine Corporation
Location: Waukegan, Illinois

Boring No: B-12
Surface Elevation: 585.2
Job No: C 9177
Sheet: 1 of 1

1409 EMIL STREET · P O BOX 9538. MADISON WIS 53715 · TEL (608) 257-4848

SAMPLE						VISUAL CLASSIFICATION and Remarks	SOIL PROPERTIES				
	Recovery		Moisture								
No	Type	▼	▼	N	Depth		Qu	W	LL	PL	D
1	SS	X	M	14		FILL: Gray to Brown Very Fine to Coarse SAND, Trace Silt, Some Gravel & Cinders					
2	SS	9"	W	15	5	Light Gray to Brown Very Fine to Fine SAND Trace Silt, Occasional Fiberous Material					
3	SS	1'	W	24	10	Gray Very Fine to Fine SAND, Trace Silt and Clay					
4	SS	1'	W	30	15						
5	SS	1'	W	33	20						
6	SS	9"	W	28	25						
						GRAVEL Some Fine to Coarse Sand					
7	SS	1'2"	M	23	30	Gray SILT, Trace Clay, Trace Sand	3.5				
						End Boring at 30'	3.5				
					35						
					40						

WATER LEVEL OBSERVATIONS

While Drilling
Upon Completion of Drilling
Time After Drilling: ¼ hour
Depth to Water: 3'6"
Depth to Cave In

GENERAL NOTES

Start 5/28/80 Complete 5/28/80
Crew Chief JWG Rig 55-1
Drilling Method: Hollow Stem Auger

WARZYN ENGINEERING INC

LOG OF TEST BORING

Project: Subsurface Investigation
Outboard Marine Corporation
Location: Waukegan, Illinois

Boring No: B-13
Surface Elevation: 585.2
Job No: C 9177
Sheet: 1 of 1

1409 EMIL STREET • P O BOX 9538 MADISON, WIS 53715 • TEL (608) 257-4848

SAMPLE						VISUAL CLASSIFICATION and Remarks	SOIL PROPERTIES				
Recovery			Moisture								
No	Type	▼	▼	N	Depth		Qu	W	LL	PL	D
1	SS	X	M	18		FILL: Brown to Gray, Very Fine to Coarse SAND, Some Gravel & Stone Chips, Trace to Little Silt and Clay					
2	SS	11"	W	24	5	Light Brown Very Fine to Medium SAND, Trace Silt and Clay					
3	SS	6"	W	24	10	Gray Very Fine to Fine SAND, Trace to Little Silt and Clay					
4	SS	12"	W	23	15						
5	SS	11"	W	32	20						
6	SS	14"	W	40	25						
7	SS	X	M	81	30	GRAVEL Some Fine to Coarse Sand Gray SILT, Trace Clay, Trace Sand End Boring at 30'	4.5/ 4.5				
					35						
					40						

WATER LEVEL OBSERVATIONS

While Drilling
Upon Completion of Drilling
Time After Drilling: ¼ hour
Depth to Water: 3'0"
Depth to Cave In

GENERAL NOTES

Start: 5/29/80 Complete: 5/29/80
Crew Chief: JWG Rig: 55-1
Drilling Method: Hollow Stem Auger

VARZYN ENGINEERING INC

LOG OF TEST BORING

Project: Subsurface Investigation
Outboard Marine Corporation
Location: Waukegan, Illinois

Boring No: B-14
Surface Elevation: 584.9
Job No: C 9177
Sheet: 1 of 1

1409 EMIL STREET • P O BOX 9538. MADISON WIS 53715 • TEL (608) 257-4848

SAMPLE						VISUAL CLASSIFICATION and Remarks	SOIL PROPERTIES				
		Recovery	Moisture				Qu	W	LL	PL	D
	Type			N	Depth						
1	SS	1'4"	M	27		3" Blacktop FILL: Brown SAND & GRAVEL, Trace to Little Silt and Clay					
2	SS	6"	W	13	5	Gray Very Fine to Fine SAND, Trace Silt and Clay Occasional Gravel, Medium Sand					
3	SS	X	W	51	10						
4	SS	8"	W	42	15						
5	SS	1'	W	40	20	2" Layer Coarse Sand					
6	SS	7"	W	23	25						
7	SS	1'	W	15	30						
8	SS	1'	M	66		Gray SILT, Trace Clay, Trace Sand End Boring at 31'6"	4.5/ 4.5				
					35						
					40						

WATER LEVEL OBSERVATIONS

While Drilling
Upon Completion of Drilling
Time After Drilling: ¼ hour
Depth to Water: 3'
Depth to Cave In

GENERAL NOTES

Start: 5/29/80 Complete: 5/29/80
Crew Chief: JWG Rig: 55-1
Drilling Method: Hollow Stem Auger

WARZYN ENGINEERING INC

LOG OF TEST BORING

Project: Subsurface Investigation
Outboard Marine Corporation
Location: Waukegan, Illinois

Boring No: B-15
Surface Elevation: 583.8
Job No: C 9177
Sheet: 1 of 1

1409 EMIL STREET · P O BOX 9538 MADISON, WIS 53715 · TEL (608) 257-4848

SAMPLE No	Type	Recovery ▼	Moisture ▼	N	Depth	VISUAL CLASSIFICATION and Remarks	SOIL PROPERTIES Qu	W	LL	PL	D
						1" Blacktop					
1	SS	X	M	40		FILL: Brown SAND and GRAVEL					
2	SS	6"	W	22	5	Dark Gray Very Fine to Medium SAND, Trace Silt (Note: Strong Odor of of Fuel Oil) and Clay					
3	SS	6"	W	23	10	Gray Very Fine to Fine SAND, Trace Silt and Clay					
4	SS	7"	W	15	15						
5	SS	9"	W	13	20	Seam Coarse Sand					
6	SS	9"	W	30	25						
7	SS	13"	W	46	30	* Gray SILT, Trace Clay, Trace Sand End Boring at 30'	4.5+/ 4.5+				
					35	* GRAVEL Some Fine to Coarse Sand					
					40						

WATER LEVEL OBSERVATIONS

While Drilling
Upon Completion of Drilling
Time After Drilling: ¼ hour
Depth to Water: 3'0"
Depth to Cave In

GENERAL NOTES

Start: 5/30/80 Complete: 5/30/80
Crew Chief: JWG Rig: 55-1
Drilling Method: Hollow Stem Auger

WARZYN ENGINEERING INC

LOG OF TEST BORING

Project: Subsurface Investigation
Outboard Marine Corporation
Location: Waukegan, Illinois

Boring No: B-16
Surface Elevation: 583.9
Job No: C 9177
Sheet: 1 of 1

1409 EMIL STREET • P O BOX 9538, MADISON WIS 53715 • TEL (608) 257-4848

SAMPLE						VISUAL CLASSIFICATION and Remarks	SOIL PROPERTIES				
		Recovery	Moisture								
No	Type	▼	▼	N	Depth	7" Blacktop	q_u	W	LL	PL	D
1	SS	12"	W	21		FILL: Tan SAND & GRAVEL					
						Gray & Tan Very Fine to Coarse SAND, Some to Little Gravel, Trace Silt and Clay					
2	SS	6"	W	19	5						
						Light Brown Very Fine to Fine SAND, Trace Silt and Clay					
3	SS	4"	W	32	10	Occasional Coarse Sand, Gravel Layer					
4	SS	4"	W	29	15						
						No Recovery on First 4 Attempts to Sample at 15', Recovery on 5th attempt					
5	SS	7"	W	32	20						
6	SS	8"	W	31	25						
						Gray SILT, Some Clay					
7	SS	12"	M	55	30		4.5/ 4.5				
						End Boring at 30'					
					35						
					40						

WATER LEVEL OBSERVATIONS

While Drilling
Upon Completion of Drilling
Time After Drilling
Depth to Water
Depth to Cave In

GENERAL NOTES

Start 6/2/80 Complete 6/2/80
Crew Chief JWG Rig 55
Drilling Method
Hollow Stem Auger

WARZYN ENGINEERING INC

LOG OF TEST BORING

Project .. Subsurface Investigation ....
Outboard Marine Corporation.. ..
Location .... Waukegan, Illinois .. ..

Boring No . . B-17
Surface Elevation 584.6
Job No .. C 9177 ....
Sheet ..1 .. of 1

1409 EMIL STREET • P O BOX 9538 MADISON, WIS 53715 • TEL (608) 257-4848

SAMPLE						VISUAL CLASSIFICATION and Remarks	SOIL PROPERTIES				
		Recovery	Moisture								
No	Type	▼	▼	N	Depth	3 3/4" Asphalt	Qu	W	LL	PL	D
1	SS	12"	M	13		FILL: Tan Fine to Coarse SAND Some Gravel					
2	SS	X	W	19	5	Tan Fine to Coarse SAND, Trace Gravel, Trace Silt and Clay					
3	SS	X	W	29	10	Tan Fine to Medium SAND, Trace Silt & Clay Occasional ½" Seams Coarse Sand					
4	SS	X	W	27	15						
5	SS	15"	W	22	20	Gray Very Fine to Fine SAND, Trace to Some Silt and Clay					
6	SS	X	W	25	25						
7	SS	12"	W	68		GRAVEL Some Fine to Coarse Sand					
8	SS	15"	W	61	30	Gray SILT, Some Clay	4.5+				
						End Boring at 30'					
					35						
					40						

WATER LEVEL OBSERVATIONS

While Drilling 30"
Upon Completion of Drilling
Time After Drilling
Depth to Water
Depth to Cave In

GENERAL NOTES

Start 6/3/80 Complete 6/3/80
Crew Chief St. Dennis Rig 750
Drilling Method Hollow Stem Auger

WARZYN ENGINEERING INC

LOG OF TEST BORING

Project: Subsurface Investigation
Outboard Marine Corporation
Location: Waukegan, Illinois

Boring No: B-18
Surface Elevation: 584.7
Job No: C 9177
Sheet: 1 of 1

1409 EMIL STREET · P O BOX 9538 MADISON, WIS 53715 · TEL (608) 257-4848

SAMPLE						VISUAL CLASSIFICATION and Remarks	SOIL PROPERTIES				
Recovery			Moisture								
No	Type	▼	▼	N	Depth		Qu	W	LL	PL	D
1	SS	12"	M	12		FILL: Tan Fine to Medium SAND, Trace Silt and Clay, Some Gravel					
2	SS	8"	W	21	5	Light Brown Very Fine to Fine SAND, Trace Silt and Clay					
						Occasional Coarse Sand					
3	SS	7"	W	27	10						
4	SS	6"	W	28	15						
5	SS	1'2"	W	49	20	Coarse Sand Layer					
6	SS	1'2"	W	30	25						
7	SS	X	M	58	30	Gray SILT, Some Clay	4.5+				
						End boring at 30'	4.5+				
					35						
					40						

WATER LEVEL OBSERVATIONS

While Drilling
Upon Completion of Drilling
Time After Drilling: ½ hour
Depth to Water: 3'
Depth to Cave In

GENERAL NOTES

Start: 6/2/80 Complete: 6/2/80
Crew Chief: JWG Rig: 55
Drilling Method: Hollow Stem Auger

WARZYN ENGINEERING INC

LOG OF TEST BORING

Project: Subsurface Investigation
Outboard Marine Corporation
Location: Waukegan, Illinois

Boring No: B-19
Surface Elevation: 584.4
Job No: C 9177
Sheet: 1 of 1

1409 EMIL STREET • P.O. BOX 9538, MADISON, WIS. 53715 • TEL. (608) 257-4848

SAMPLE						VISUAL CLASSIFICATION and Remarks	SOIL PROPERTIES				
Recovery			Moisture								
No.	Type	↓	↓	N	Depth		Qu	W	LL	PL	D
						3½" Blacktop					
1	SS	1'	M	20		FILL: Tan SAND & GRAVEL, Trace Silt & Clay					
2	SS	1'	W	16	5	Tan Very Fine to Coarse SAND, Trace Silt, and Clay, Trace Gravel					
3	SS	6"	W	31	10						
4	SS	1'	W	40	15	Gray Very Fine to Fine Sand, Trace Silt and Clay					
5	SS	1'	W	36	20						
6	SS	1'	W	27	25						
7	SS	1'3"	M	81	30	Gray SILT, Some Clay, Trace Sand	4.5/ 4.5+				
						End Boring at 30'					
					35						
					40						

WATER LEVEL OBSERVATIONS

While Drilling
Upon Completion of Drilling
Time After Drilling: ½ hour
Depth to Water: 3'0"
Depth to Cave In

GENERAL NOTES

Start: 6/2/80 Complete: 6/2/80
Crew Chief: JWG Rig: 55-1
Drilling Method: Hollow Stem Auger

LOG OF TEST BORING

IEERING INC

Project: Subsurface Investigation
Outboard Marine Corporation
Location: Waukegan, Illinois

Boring No: B-20
Surface Elevation: 583.9
Job No.: C 9177
Sheet: 1 of 1

1409 EMIL STREET • P.O. BOX 9538, MADISON, WIS 53715 • TEL. (608) 257-4848

SAMPLE						VISUAL CLASSIFICATION and Remarks	SOIL PROPERTIES				
	Type	Recovery	Moisture	N	Depth		q_u	W	LL	PL	D
	SS	1'	M	27		3" Blacktop FILL: Tan SAND, and GRAVEL Trace to Little Silt and Clay					
	SS	1'	W	30	5	Tan to Gray Very Fine to Coarse SAND, Trace of Silt and Clay, Little to Trace Gravel					
	SS	1'	W	44	10						
4	SS	9"	W	23	15	Gray Very Fine to Fine SAND, Trace Silt and Clay					
5	SS	X	W	23	20						
6	SS	1'	W	20	25						
7	SS	1'4"	M	102	30	Gray SILT, Some Clay, Trace Sand	4.5+/				
						End Boring at 30'	4.5				
					35						
					40						

WATER LEVEL OBSERVATIONS

While Drilling
Upon Completion of Drilling
Time After Drilling: ½ hour
Depth to Water: 3'0"
Depth to Cave In

GENERAL NOTES

Start: 6/3/80 Complete: 6/3/80
Crew Chief: JWG Rig: 55-1
Drilling Method: Hollow Stem Auger

WARZYN ENGINEERING INC

LOG OF TEST BORING

Project: Subsurface Investigation
Outboard Marine Corporation
Location: Waukegan, Illinois

Boring No: B-21
Surface Elevation: 583.8
Job No.: C 9177
Sheet: 1 of 1

1409 EMIL STREET • P.O. BOX 9538, MADISON, WIS. 53715 • TEL. (608) 257-4848

SAMPLE						VISUAL CLASSIFICATION and Remarks	SOIL PROPERTIES				
Recovery		Moisture									
No.	Type	↓	↓	N	Depth		q_u	W	LL	PL	D
						4" Asphalt					
1	SS	X	M	19		FILL: Tan Fine to Coarse SAND & GRAVEL, Trace Silt					
2	SS	X	W	18	5	Gray Fine to Medium SAND, Trace Silt and Clay Occasional Wood Fragments					
3	SS	X	W	28	10						
4	SS	12"	W	37	15						
5	SS	12"	W	28	20	Occasional Black Streaks at 20' Gray Very Fine to Fine SAND, Trace to Some Silt and Clay					
6	SS	X	W	26	25						
						*					
7	SS	X	M	29	30	Gray SILT, Trace Clay, Trace Sand End Boring at 29'					
					35						
					40						

* GRAVEL, Some Fine to Coarse Sand

WATER LEVEL OBSERVATIONS

While Drilling: 26"
Upon Completion of Drilling:
Time After Drilling:
Depth to Water:
Depth to Cave In:

GENERAL NOTES

Start: 6/3/80 Complete: 6/3/80
Crew Chief: St. Dennis Rig: 750
Drilling Method: Hollow Stem Auger

:YN

RING INC

LOG OF TEST BORING

Project Subsurface Investigation
Outboard Marine Corporation
Location Waukegan, Illinois

Boring No B-22
Surface Elevation 584.4
Job No. C 9177
Sheet 1 of 1

1409 EMIL STREET • P.O. BOX 9538, MADISON, WIS 53715 • TEL. (608) 257-4848

MPLE y	Moisture	N	Depth	VISUAL CLASSIFICATION and Remarks	SOIL PROPERTIES Qu	W	LL	PL	D
1'	M	19		3" Blacktop FILL: Tan SAND, Some Gravel					
4"	W	26	5	Tan to Gray Very Fine to Coarse SAND, Some to Little Gravel					
SS 1'	W	20	10						
SS 1'2"	W	45	15	Gray Very Fine to Fine SAND, Some to Trace Silt and Clay					
5 SS 1'2"	W	26	20						
6 SS 1'3"	W	35	25						
				GRAVEL Some Fine to Coarse Sand					
7 SS X	W	105	30	Gray SILT, Trace Clay, Trace Sand	4.5/ 4.5				
				End Boring at 30'					
			35						
			40						

WATER LEVEL OBSERVATIONS

While Drilling
Upon Completion of Drilling
Time After Drilling ½ hour
to Water 3'0"

GENERAL NOTES

Start 6/4/80 Complete 6/4/80
Crew Chief JWG Rig 55-1
Drilling Method Hollow Stem Auger

WARZYN ENGINEERING INC

LOG OF TEST BORING

Project: Subsurface Investigation
Outboard Marine Corporation
Location: Waukegan, Illinois

Boring No: B-23
Surface Elevation: 584.4
Job No: C 9177
Sheet: 1 of 1

1409 EMIL STREET • P.O. BOX 9538, MADISON, WIS 53715 • TEL. (608) 257-4848

SAMPLE						VISUAL CLASSIFICATION and Remarks	SOIL PROPERTIES				
Recovery			Moisture								
No.	Type	↓	↓	N	Depth		q_u	W	LL	PL	D
						3" Blacktop					
1	SS	X	M	17		FILL: Gravel					
						Gray and Tan Very Fine to Fine SAND, Trace Silt and Clay					
2	SS	9"	W	20	5						
						Occasional Gravel, Coarse Sand					
3	SS	1'	W	45	10						
4	SS	6"	W	27	15						
5	SS	1'	W	39	20						
6	SS	1'1"	W	18	25						
						Gray SILT, Some Clay					
7	SS	1'4"	M	86	30		4.5+V				
						End Boring at 29'	4.5+				
					35						
					40						

WATER LEVEL OBSERVATIONS

While Drilling
Upon Completion of Drilling
Time After Drilling: ½ hour
Depth to Water: 4'
Depth to Cave In

GENERAL NOTES

Start: 5/27/80 Complete: 5/27/80
Crew Chief: JWG Rig: 55-1
Drilling Method: Hollow Stem Auger

WARZYN ENGINEERING INC

LOG OF TEST BORING

Project: Subsurface Investigation
Outboard Marine Corporation
Location: Waukegan, Illinois

Boring No: B-24
Surface Elevation: 583.9
Job No.: C 9177
Sheet: 1 of 1

1409 EMIL STREET • P.O. BOX 9538, MADISON, WIS. 53715 • TEL. (608) 257-4848

SAMPLE No	Type	Recovery ↓	Moisture ↓	N	Depth	VISUAL CLASSIFICATION and Remarks	SOIL PROPERTIES qu	W	LL	PL	D
						3½" Asphalt					
						*					
1	SS	X	M	11		Tan Fine to Medium SAND, Trace Silt & Clay Occasional Gravel Seams					
2	SS	X	W	30	5						
3	SS	6"	W	28	10						
4	SS	X	W	25	15	Gray Very Fine to Fine SAND, Trace Silt & Clay, Trace Gravel					
5	SS	X	W	34	20						
6	SS	X	W	26	25	GRAVEL with Fine to Coarse Sand					
						Gray SILT, Some to Little Clay, Little to Trace Sand, Trace Gravel					
7	SS	X	M	51	30	End Boring at 30'					
						* FILL: Tan Fine to Coarse SAND & GRAVEL Trace Silt & Clay					
					35						
					40						

WATER LEVEL OBSERVATIONS

While Drilling: 24"
Upon Completion of Drilling:
Time After Drilling:
Depth to Water:
Depth to Cave In:

GENERAL NOTES

Start: 6/3/80 Complete: 6/3/80
Crew Chief: St. Dennis Rig: 75n
Drilling Method: Hollow Stem Auger

WARZYN ENGINEERING INC

LOG OF TEST BORING

Project: Subsurface Investigation
Outboard Marine Corporation
Location: Waukegan, Illinois

Boring No. B25
Surface Elevation 583.7
Job No. C 9177
Sheet 1 of 1

1409 EMIL STREET • P.O BOX 9538, MADISON, WIS 53715 • TEL. (608) 257-4848

SAMPLE						VISUAL CLASSIFICATION and Remarks	SOIL PROPERTIES				
Recovery			Moisture								
No	Type	▼	▼	N	Depth		q_u	W	LL	PL	D
						6" Blacktop					
1	SS	1'	M	14		FILL: Tan SAND & GRAVEL, Little to Trace Silt and Clay					
2	SS	1'	W	13	5	Occasional Gravel					
3	SS	1'	W	33	10	Gray Very Fine to Fine SAND, Trace Silt and Clay					
4	SS	1'	W	62	15						
5	SS	1'	W	10	20						
6	SS	1'	W	63	25	GRAVEL Some Fine to Coarse Sand *					
7	SS	3"	M	-		End Boring at 25'					
					30	* Gray SILT, Some Clay					
					35						
					40						

WATER LEVEL OBSERVATIONS

While Drilling
Upon Completion of Drilling
Time After Drilling ½ hour
Depth to Water 3'
Depth to Cave In

GENERAL NOTES

Start 6/3/80 Complete 6/3/80
Crew Chief JWG Rig 55-1
Drilling Method Hollow Stem Auger

WARZYN ENGINEERING INC

LOG OF TEST BORING

Project: Subsurface Investigation
Outboard Marine Corporation
Location: Waukegan, Illinois

Boring No: B26
Surface Elevation: 584.4
Job No: C 9177
Sheet: 1 of 1

1409 EMIL STREET • P.O. BOX 9538, MADISON, WIS 53715 • TEL. (608) 257-4848

SAMPLE No.	Type	Recovery	Moisture	N	Depth	VISUAL CLASSIFICATION and Remarks	Qu	W	LL	PL	D
						3½" Asphalt					
						*					
1	SS	X	M	15		FILL: Brown & Black Fine to Medium SAND Trace Silt and Clay					
2	SS	X	W	15	5	Gray Fine to Coarse SAND and Fine to Coarse Gravel, Trace Silt and Clay					
3	SS	10"	W	25	10	Gray Fine to Medium SAND, Trace to Some Silt and Clay					
4	SS	12"	W	42	15	Soil Contains Black Material					
5	SS	X	W	19	20	Gray Silt-Many 4" to 6" Layers Clayey SILT Scattered ½" Seams Coarse Sand					
6	SS	X	W	4	25	GRAVEL, Some Fine to Coarse SAND					
7	SS	6"	M	74		Gray SILT, Trace Clay, Trace Sand	4.5+				
					30	End Boring at 29'					
						* FILL: Tan Fine to Coarse SAND and GRAVEL, Trace to Some Silt & Clay					
					35						
					40						

WATER LEVEL OBSERVATIONS

While Drilling: 23"
Upon Completion of Drilling:
Time After Drilling:
Depth to Water:
Depth to Cave In:

GENERAL NOTES

Start: 6/4/80 Complete: 6/4/80
Crew Chief: St. Dennis Rig: 750
Drilling Method: Hollow Stem Auger

WARZYN ENGINEERING INC

LOG OF TEST BORING

Project: Subsurface Investigation
Outboard Marine Corporation
Location: Waukegan, Illinois

Boring No. B27
Surface Elevation 584.1
Job No. C 9177
Sheet 1 of 1

1409 EMIL STREET • P.O BOX 9538, MADISON, WIS. 53715 • TEL. (608) 257-4848

SAMPLE No.	Type	Recovery ↓	Moisture ↓	N	Depth	VISUAL CLASSIFICATION and Remarks	Qu	W	LL	PL	D
						3½" Asphalt					
1	SS	6"	M	17		FILL: Brown Fine to Medium SAND & GRAVEL Trace Silt and Clay					
2	SS	6"	W	15	5	Dark Gray					
3	SS	12"	W	19	10	Gray Very Fine to Fine SAND, Trace to Some Silt and Clay					
4	SS	X	W	26	15						
5	SS	X	W	29	20						
6	SS	NR	-	-	25	Gray SILT, Some to Little Sand & Clay, Little to Trace Gravel					
7	SS	4½"	M	100		End Boring at 26½'					
					30						
					35						
					40						

WATER LEVEL OBSERVATIONS

While Drilling 38"
Upon Completion of Drilling
Time After Drilling
Depth to Water
Depth to Cave In

GENERAL NOTES

Start 6/6/80 Complete 6/6/80
Crew Chief St. Dennis Rig 750
Drilling Method Hollow Stem Auger

WARZYN ENGINEERING INC

LOG OF TEST BORING

Project: Subsurface Investigation
Outboard Marine Corporation
Location: Waukegan, Illinois

Boring No: B28
Surface Elevation: 585.2
Job No: C 9177
Sheet: 1 of 1

1409 EMIL STREET • P.O. BOX 9538, MADISON, WIS. 53715 • TEL. (608) 257-4848

SAMPLE No.	Type	Recovery	Moisture	N	Depth	VISUAL CLASSIFICATION and Remarks	SOIL PROPERTIES qu	W	LL	PL	D
1	SS	1'2"	M	25		Tan SAND & GRAVEL, Little to Trace Silt and Clay					
2	SS	1'1"	W	3	5	Dark Gray SAND, Some to Little Organic Silt, Trace Gravel Fibrous Material Noted					
3	SS	6"	W	25	10	Gray Very Fine to Fine SAND, Trace Silt and Clay Lighter					
4	SS	1'2"	W	37	15	4" Layer Coarse Sand					
5	SS	1'2"	W	38	20						
6	SS	X	W	62	25						
7	SS	1'2"	M	117		Gray SILT, Some Clay, Little to Trace Sand and Gravel	4.5/ 4.5				
					30	End Boring at 29'0"					
					35						
					40						

WATER LEVEL OBSERVATIONS

While Drilling
Upon Completion of Drilling
Time After Drilling: ½ hour
Depth to Water: 3'6"
Depth to Cave In

GENERAL NOTES

Start 6/4/80 Complete 6/4/80
Crew Chief JWG Rig 55-1
Drilling Method: Hollow Stem Augers

WARZYN ENGINEERING INC

LOG OF TEST BORING

Project: Subsurface Investigation
Outboard Marine Corporation
Location: Waukegan, Illinois

Boring No: B29
Surface Elevation: 584.8
Job No.: C 9177
Sheet: 1 of 1

1409 EMIL STREET • P.O. BOX 9538, MADISON, WIS. 53715 • TEL. (608) 257-4848

SAMPLE						VISUAL CLASSIFICATION and Remarks	SOIL PROPERTIES				
Recovery			Moisture				q_u	W	LL	PL	D
No.	Type	↓	↓	N	Depth						
1	SS	X	M	11		Tan Fine to Medium SAND, Some to Little Silt, Trace Gravel, Blue Clay & Silt 1½' to 2½'					
2	SS	X	W	10	5						
						Black Fine to Coarse SAND, Some Fine to Coarse Gravel, Trace to Little Silt & Clay					
3	SS	X	W	9	10						
4	SS	X	W	15	15	Gray Very Fine to Medium SAND Little to Trace Silt and Clay, Trace Fine Gravel					
5	SS	X	W	38	20						
6	SS	X	M	33	25	**	4.5+				
						End Boring at 25'					
					30	* 3" FILL: Black Fine to Coarse SAND, Some to Trace Silt and Gravel					
						** Gray SILT, Some Clay, Very Scattered 1/16" Seams of Clay					
					35						
					40						

WATER LEVEL OBSERVATIONS

While Drilling
Upon Completion of Drilling
Time After Drilling
Depth to Water
Depth to Cave In

GENERAL NOTES

Start: 6/5/80 Complete: 6/5/80
Crew Chief: St. Dennis Rig: 750
Drilling Method: Hollow Stem Auger

WARZYN ENGINEERING INC

LOG OF TEST BORING

Project: Subsurface Investigation
Outboard Marine Corporation
Location: Waukegan, Illinois

Boring No. B30
Surface Elevation 585.1
Job No. C 9177
Sheet 1 of 1

1409 EMIL STREET • P.O. BOX 9538, MADISON, WIS. 53715 • TEL. (608) 257-4848

SAMPLE No.	Type	Recovery ↓	Moisture ↓	N	Depth	VISUAL CLASSIFICATION and Remarks	Qu	W	LL	PL	D
						Cinders					
1	SS	X	M	14		Attempted Twice to Obtain Sample 2					
2	SS	3"	W	3	5	Gray Very Fine to Coarse SAND, Trace Silt and Clay					
3	SS	1'	W	39	10	Gray Very Fine to Fine SAND, Trace Silt and Clay, Trace Fine Gravel					
4	SS	9"	W	22	15						
5	SS	1'	W	46	20						
6	SS	X	M	25	25	*	4.5+/				
						End Boring at 25'	4.5+				
					30	* Gray SILT, Some to Little Sand & Clay, Little to Trace Gravel					
					35						
					40						

WATER LEVEL OBSERVATIONS

While Drilling
Upon Completion of Drilling
Time After Drilling ½ hour
Depth to Water 2'6"
Depth to Cave In

GENERAL NOTES

Start 6/6/80 Complete 6/6/80
Crew Chief JWG Rig 55-1
Drilling Method Hollow Stem Auger

WARZYN ENGINEERING INC

LOG OF TEST BORING

Project: Subsurface Investigation
Outboard Marine Corporation
Location: Waukegan, Illinois

Boring No: B31
Surface Elevation: 584.1
Job No: C 9177
Sheet: 1 of 1

1409 EMIL STREET • P.O. BOX 9538, MADISON, WIS 53715 • TEL. (608) 257-4848

SAMPLE No.	Type	Recovery	Moisture	N	Depth	VISUAL CLASSIFICATION and Remarks	SOIL PROPERTIES Qu	W	LL	PL	D
1	SS	1'	M	33		Brown SAND and GRAVEL, Little to Trace Silt and Clay					
2	SS	4"	W	2	5						
3	SS	1'	W	33	10	Gray Very Fine to Fine SAND, Trace Silt and Clay					
4	SS	1'2"	W	13	15						
5	SS	1'	W	49	20						
6	SS	1'4"	W	41	25	*	4.5V 4.5				
						End Boring at 25'					
					30	* Gray SILT, Some to Little Clay, Little to Trace Sand, Trace Gravel					
					35						
					40						

WATER LEVEL OBSERVATIONS

While Drilling
Upon Completion of Drilling
Time After Drilling: ½ hour
Depth to Water: 3.1
Depth to Cave In

GENERAL NOTES

Start: 6/5/80 Complete: 6/5/80
Crew Chief: JWG Rig: 55-1
Drilling Method: Hollow Stem Auger

5

WARZYN ENGINEERING INC

LOG OF TEST BORING

Project: Subsurface Investigation
Outboard Marine Corporation
Location: Waukegan, Illinois

Boring No: B32
Surface Elevation: 584.6
Job No: C 9177
Sheet: 1 of 1

1409 EMIL STREET • P.O. BOX 9538, MADISON, WIS. 53715 • TEL. (608) 257-4848

SAMPLE No	Type	Recovery ↓	Moisture ↓	N	Depth	VISUAL CLASSIFICATION and Remarks	SOIL PROPERTIES qu	W	LL	PL	D
1	SS	10"	M	3		FILL: Brown & Black Fine to Medium SAND, Trace Silt and Clay					
2	SS	8"	W	9	5	Black & Gray Fine to Coarse SAND, Fine to Coarse Gravel, Trace Silt and Clay Black Oily Substance Noted in Sample					
3	SS	X	W	14	10	Gray Fine to Coarse SAND, Trace Silt & Clay, Trace Gravel					
4	SS	14"	W	16	15						
5	SS	X	W	41	20	*					
6A 6B			W			Gray SILT, Some to Little Clay, Little to Trace Sand Trace Gravel Note Oil Smell in Bottom 3" of Sample 5					
6C	SS	X	M	92	25	23'6" to 23'7" 4" Piece of Wood	4.5+/ 4.5+				
						End Boring at 25'					
					30						
					35	* GRAVEL, Some Fine to Coarse Sand					
					40						

WATER LEVEL OBSERVATIONS

While Drilling 34"
Upon Completion of Drilling
Time After Drilling
Depth to Water
Depth to Cave In

GENERAL NOTES

Start 6/5/80 Complete 6/5/80
Crew Chief St. Dennis Rig 750
Drilling Method Hollow Stem Auger

RZYN
EERING INC

LOG OF TEST BORING

Project Subsurface Investigation
Outboard Marine Corporation
Location Waukegan, Illinois

Boring No. B33
Surface Elevation 585.2
Job No. C 9177
Sheet 1 of 1

1409 EMIL STREET • P.O. BOX 9538, MADISON, WIS. 53715 • TEL. (608) 257-4848

AMPLE					VISUAL CLASSIFICATION and Remarks	SOIL PROPERTIES				
	Type	Recovery	Moisture	N	Depth		Qu	W	LL	PL	D
						FILL: Loose Black CINDERS with Fine to Coarse Sand, Some Fine to Coarse Gravel					
	SS	X	M	7							
	SS	X	W	14	5	Tan and Black Fine to Medium SAND, Trace Silt & Clay, Trace Gravel					
	SS	11"	W	14	10	Gray Very Fine to Medium SAND, Trace Silt & Clay, Trace Fine to Medium Gravel					
4	SS	X	W	37	15						
5	SS	X	W	34	20						
		NR		100/0"		GRAVEL, Some Fine to Coarse Sand					
6	SS	6"	M	100/6"	25	Gray SILT, Some to Little Clay, Little to Trace Sand, Trace Gravel	4.0+				
						End Boring at 25'					
					30						
					35						
					40						

WATER LEVEL OBSERVATIONS

While Drilling
Upon Completion of Drilling
Time After Drilling
Depth to Water
- In

GENERAL NOTES

Start 6/4/80 Complete 6/4/80
Crew Chief St. Dennis Rig 750
Drilling Method Hollow Stem Auger

WARZYN ENGINEERING INC

LOG OF TEST BORING

Project: Subsurface Investigation
Outboard Marine Corporation
Location: Waukegan, Illinois

Boring No: B34
Surface Elevation: 584.9
Job No.: C 9177
Sheet: 1 of 1

1409 EMIL STREET • P.O. BOX 9538, MADISON, WIS 53715 • TEL (608) 257-4848

SAMPLE No	Type	Recovery	Moisture	N	Depth	VISUAL CLASSIFICATION and Remarks	SOIL PROPERTIES Qu	W	LL	PL	D
						FILL: Tan SAND & GRAVEL, Some to Little Silt and Clay					
1	SS	X	M	40							
2	SS	1'	W	5	5	Gray Very Fine to Fine SAND, Trace Silt and Clay, Trace Fine Gravel					
3	SS	1'2"	W	20	10						
4	SS	1'3"	W	40	15	2" Layer Coarse Sand, Gravel					
5	SS	11"	W	65	20						
						GRAVEL Some Fine to Coarse Sand					
6	SS	1'4"	M	38	25	Gray SILT, Trace Clay, Trace Sand	4.5/ 4.5				
						End Boring at 25'					
					30						
					35						
					40						

WATER LEVEL OBSERVATIONS

While Drilling
Upon Completion of Drilling
Time After Drilling: ½ hour
Depth to Water: 3'4"
Depth to Cave In

GENERAL NOTES

Start 6/5/80 Complete 6/5/80
Crew Chief JWG Rig 55-1
Drilling Method: Hollow Stem Auger

6

WARZYN ENGINEERING INC

LOG OF TEST BORING

Project: Subsurface Investigation
Outboard Marine Corporation
Location: Waukegan, Illinois

Boring No. B35
Surface Elevation 584.3
Job No. C 9177
Sheet 1 of 1

1409 EMIL STREET • P.O. BOX 9538, MADISON, WIS. 53715 • TEL. (608) 257-4848

SAMPLE No	Type	Recovery	Moisture	N	Depth	VISUAL CLASSIFICATION and Remarks	SOIL PROPERTIES qu	W	LL	PL	D
1	SS	X	W	2		Black Fine to Medium SAND, Trace to Little Silt and Clay					
2	SS	X	W	11	5						
3	SS	X	W	16	10	Black Very Fine to Fine SAND, Trace Silt and Clay					
4	SS	X	W	23	15						
5	SS	X	W	32	20	Black Very Fine to Fine SAND, Some to Little Silt and Clay and Clay					
6	SS	X	W	9	25						
7	SS	12"	W	87	30	Black Fine to Coarse SAND, Some Gravel, Some to Little Silt					
8	SS	X	M	33	35	Gray SILT, Some Clay					
						End Boring at 35'					
					40	Note: Samples 1-6 had a very strong odor, similar to tar					

WATER LEVEL OBSERVATIONS

While Drilling
Upon Completion of Drilling
Time After Drilling
Depth to Water
Depth to Cave In

GENERAL NOTES

Start 6/6/80 Complete 6/6/80
St. Dennis
Crew Chief ..... Rig 750
Drilling Method ....
Hollow Stem Auger

5

RZYN

ERING INC

LOG OF TEST BORING

Project: Subsurface Investigation
Outboard Marine Corporation
Location: Waukegan, Illinois

Boring No. B36
Surface Elevation 585.0
Job No. C 9177
Sheet 1 of 1

1409 EMIL STREET • P.O. BOX 9538, MADISON, WIS 53715 • TEL. (608) 257-4848

SAMPLE					VISUAL CLASSIFICATION and Remarks	SOIL PROPERTIES				
	overy	Moisture	N	Depth		Qu	W	LL	PL	D
	X	M	4		FILL: Loose Black Coal and Cinders					
SS	X	W	10	5	Tan Fine to Medium SAND, Trace Silt and Clay					
SS	X	W	19	10	Black Very Fine to Medium SAND, Trace Silt and Clay					
SS	11"	W	19	15						
5 SS	X	W	34	20	Black Very Fine to Medium SAND, Some to Little Silt and Clay					
6 SS	12"	M	38	25	**	4.5+				
					End Boring at 25'					
				30	* GRAVEL, Some Fine to Coarse Sand ** Gray SILT, Some to Litte Sand & Clay, Little to Trace Gravel					
				35	Note: Samples 3-5 had a very strong odor, similar to tar					
				40						

WATER LEVEL OBSERVATIONS

While Drilling
Upon Completion of Drilling
Time After Drilling
Depth to Water
...in

GENERAL NOTES

Start 6/4/80 Complete 6/4/80
Crew Chief St. Dennis Rig 750
Drilling Method Hollow Stem Auger

NARZYN ENGINEERING INC

LOG OF TEST BORING

Project: Subsurface Investigation
Outboard Marine Corporation
Location: Waukegan, Illinois

Boring No. B37
Surface Elevation 585.2
Job No. C 9177
Sheet 1 of 1

1409 EMIL STREET • P.O. BOX 9538, MADISON, WIS 53715 • TEL. (608) 257-4848

SAMPLE						VISUAL CLASSIFICATION and Remarks	SOIL PROPERTIES				
	Recovery		Moisture								
No.	Type	▼	▼	N	Depth		Qu	W	LL	PL	D
1	SS	14"	M	38		FILL: Black COAL with Gravel, Wood, Concrete					
2	SS	X	W	16	5	Tan to Gray Fine to Medium SAND, Trace Silt and Clay					
3	SS	X	W	25	10	Black Fine to Medium SAND, Trace Silt & Clay, Trace Fine to Medium Gravel Very Strong Tar Like Odor					
4	SS	X	W	26	15						
5	SS	X	W	28	20						
6	SS	X	W	22	25						
7	SS	15"	M	31	30	GRAVEL, Some Fine to Coarse Sand *					
						End Boring at 30'					
					35	* Black SILT & CLAY, Some to Little Sand Little to Trace Gravel					
					40						

WATER LEVEL OBSERVATIONS

While Drilling
Upon Completion of Drilling
Time After Drilling
Depth to Water
Depth to Cave In

GENERAL NOTES

Start 6/9/80 Complete 6/9/80
Crew Chief St. Dennis Rig 750
Drilling Method Hollow Stem Auger

WARZYN ENGINEERING INC

LOG OF TEST BORING

Project: Subsurface Investigation
Outboard Marine Corporation
Location: Waukegan, Illinois

Boring No. B38
Surface Elevation 585.5
Job No. C 9177
Sheet 1 of 1

1409 EMIL STREET • P.O. BOX 9538, MADISON, WIS 53715 • TEL. (608) 257-4848

SAMPLE No.	Type	Recovery	Moisture	N	Depth	VISUAL CLASSIFICATION and Remarks	SOIL PROPERTIES Qu	W	LL	PL	D
						FILL: Black Coal, Trace Gravel					
1	SS	X	M	20		FILL: Black Very Fine to Medium SAND, Many Large Chunks Concrete, Sand Saturated with Tar Material					
2	SS	X	W	6	5						
						Black Fine to Medium SAND, Trace Silt and Clay (Note: Sand Saturated with Tar Like Material)					
3	SS	X	W	12	10						
4	SS	X	W	28	15						
						Black Very Fine SAND, Some Silt and Clay (Saturated with Tar Like Material)					
5	SS	X	W	30	20						
6	SS	X	W	22	25						
7	SS	6"	W	23							
						Black Fine to Coarse SAND, Some Gravel *					
8	SS	12"	M	89	30						
						End Boring at 30'					
						* Gray SILT, Some to Little Sand & Clay, Little to Trace Gravel					
					35						
					40						

WATER LEVEL OBSERVATIONS

While Drilling
Upon Completion of Drilling
Time After Drilling
Depth to Water
Depth to Cave In

GENERAL NOTES

Start 6/10/80 Complete 6/10/80
Crew Chief St. Dennis Rig 75
Drilling Method Hollow Stem Auger

5

WARZYN ENGINEERING INC

LOG OF TEST BORING

Project: Subsurface Investigation
Outboard Marine Corporation
Location: Waukegan, Illinois

Boring No: B39
Surface Elevation: 584.1
Job No: C 9177
Sheet: 1 of 1

1409 EMIL STREET • P.O. BOX 9538, MADISON, WIS 53715 • TEL. (608) 257-4848

SAMPLE No.	Type	Recovery ↓	Moisture ↓	N	Depth	VISUAL CLASSIFICATION and Remarks	SOIL PROPERTIES qu	W	LL	PL	D
						2" FILL: Tan Fine SAND					
1	SS	X	M	12		COAL					
2	SS	X	W	13	5	Brown Fine to Coarse SAND, Some to Little Fine to Coarse Gravel, Trace Silt & Clay					
3	SS	14"	W	23	10	Dark Gray Very Fine to Fine SAND, Trace Silt & Clay					
4	SS	X	W	34	15	Black Very Fine to Fine SAND, Some to Trace Silt & Clay					
5	SS	X	W	34	20						
6	SS	X	W	41	25						
7	SS	X	M	38		* Gray SILT, Some to Little Sand & Clay, Little to Trace Gravel					
					30	End Boring at 29'					
						Note: Sample 4 & 5 had a Strong Odor, Similar to Tar					
					35	* GRAVEL, Some Fine to Coarse Sand					
					40						

WATER LEVEL OBSERVATIONS

While Drilling
Upon Completion of Drilling
Time After Drilling
Depth to Water
Depth to Cave In

GENERAL NOTES

Start 6/9/80 Complete 6/9/80
Crew Chief St. Dennis Rig 750
Drilling Method Hollow Stem Auger

WARZYN ENGINEERING INC

LOG OF TEST BORING

Project: Subsurface Investigation
Outboard Marine Corporation
Location: Waukegan, Illinois

Boring No. SB-1
Surface Elevation 584.9
Job No. C 9177
Sheet 1 of 1

1409 EMIL STREET • P.O. BOX 9538, MADISON, WIS 53715 • TEL. (608) 257-4848

SAMPLE						VISUAL CLASSIFICATION and Remarks	SOIL PROPERTIES				
Recovery			Moisture				q_u	W	LL	PL	D
No.	Type	↓	↓	N	Depth						
1	SS	12"	M	12		*					
2	SS	X	M	30		Tan to Black Fine to Medium SAND					
3	SS	X		22	5	Brown Medium to Coarse SAND, Trace Fine to Coarse Gravel					
						End Boring at 6'					
					10						
						* FILL: Brown & Black Fine to Coarse SAND, Trace Silt & Clay, Trace Fine to Coarse Sand					
					15						
					20						
					25						
					30						
					35						
					40						

WATER LEVEL OBSERVATIONS

While Drilling
Upon Completion of Drilling
Time After Drilling
Depth to Water
Depth to Cave In

GENERAL NOTES

Start 5/30/80 Complete 5/30/80
Crew Chief St. Dennis Rig 750
Drilling Method Hollow Stem Auger

WARZYN ENGINEERING INC

LOG OF TEST BORING

Project: Subsurface Investigation
Outboard Marine Corporation
Location: Waukegan, Illinois

Boring No: SB-2
Surface Elevation: 584.9
Job No.: C 9177
Sheet: 1 of 1

1409 EMIL STREET • P.O. BOX 9538, MADISON, WIS. 53715 • TEL. (608) 257-4848

SAMPLE						VISUAL CLASSIFICATION and Remarks	SOIL PROPERTIES				
Recovery			Moisture				q_u	W	LL	PL	D
No	Type	↓	↓	N	Depth						
1	SS	X	M	22		Asphalt 1" to 3"					
						FILL: Brown Fine to Coarse SAND, Trace Fine to Coarse Gravel					
2	SS	X	W	20		Brown Fine to Medium SAND, Trace Silt and Clay					
					5						
3	SS	14"	W	10		Gray Fine to Coarse SAND, Trace Fine to Coarse Gravel					
						End Boring at 6'					
					10						
					15						
					20						
					25						
					30						
					35						
					40						

WATER LEVEL OBSERVATIONS

While Drilling: 23½"
Upon Completion of Drilling:
Time After Drilling:
Depth to Water:
Depth to Cave In:

GENERAL NOTES

Start: 5/30/80 Complete: 5/30/80
Crew Chief: St. Dennis Rig: 750
Drilling Method: Hollow Stem Auger

RZYN
VEERING INC

LOG OF TEST BORING

Project: Subsurface Investigation
Outboard Marine Corporation
Location: Waukegan, Illinois

Boring No. SB-3
Surface Elevation 584.4
Job No. C 9177
Sheet 1 of 1

1409 EMIL STREET • P.O. BOX 9538, MADISON, WIS. 53715 • TEL. (608) 257-4848

SAMPLE Type	Recovery	Moisture	N	Depth	VISUAL CLASSIFICATION and Remarks	SOIL PROPERTIES qu	W	LL	PL	D
					3" Asphalt					
SS	X	M	28		FILL: Firm Brown Very Fine to Coarse SAND, Trace Organic Material, Some to Little Silt, Gravel and Clay					
SS	X	W	10							
SS	9"	W	2	5						
					End Boring at 6'					
				10						
				15						
				20						
				25						
				30						
				35						
				40						

WATER LEVEL OBSERVATIONS

While Drilling 18"
Upon Completion of Drilling
Time After Drilling
Depth to Water
Depth to Cave In

GENERAL NOTES

Start 6/5/80 Complete 6/5/80
Crew Chief St. Dennis Rig 7
Drilling Method Hollow Stem Auger

HARZYN ENGINEERING INC

LOG OF TEST BORING

Project: Subsurface Investigation
Outboard Marine Corporation
Location: Waukegan, Illinois

Boring No: SB-4
Surface Elevation: 584.2
Job No.: C 9177
Sheet: 1 of 1

1409 EMIL STREET • P.O. BOX 9538, MADISON, WIS 53715 • TEL. (608) 257-4848

SAMPLE					VISUAL CLASSIFICATION and Remarks	SOIL PROPERTIES				
Recovery Type	Recovery ▼	Moisture ▼	N	Depth		q_u	W	LL	PL	D
SS	8"	M	10		* Dark Gray CINDERS & SAND, Trace Gravel					
SS	11"	W	5							
SS	13"	W	28	5	Gray Very Fine to Medium SAND, Trace Silt and Clay, Occasional Fibrous Material					
					End Boring at 6'					
				10						
				15	* FILL: Brown SAND & GRAVEL					
				20						
				25						
				30						
				35						
				40						

WATER LEVEL OBSERVATIONS

While Drilling
Upon Completion of Drilling
Time After Drilling: ½ hour
Depth to Water: 1'2"

GENERAL NOTES

Start: 5/30/80 Complete: 5/30/80
Crew Chief: JWG Rig: 55-1
Drilling Method: Hollow Stem Auger

WARZYN ENGINEERING INC

LOG OF TEST BORING

Project: Subsurface Investigation
Outboard Marine Corporation
Location: Waukegan, Illinois

Boring No: SB-5
Surface Elevation: 586.4
Job No: C 9177
Sheet: 1 of 1

1409 EMIL STREET • P.O. BOX 9538, MADISON, WIS 53715 • TEL. (608) 257-4848

SAMPLE						VISUAL CLASSIFICATION and Remarks	SOIL PROPERTIES				
Recovery			Moisture								
No	Type	↓	↓	N	Depth		q_u	W	LL	PL	D
1	SS	X	M	7		CINDERS, Trace Silt, Sand and Clay					
2	SS	X	W	2		MARL, Wood Chips & Sand					
3	SS	X	W	10	5						
						End Boring at 6'					
					10						
					15						
					20						
					25						
					30						
					35						
					40						

WATER LEVEL OBSERVATIONS

While Drilling
Upon Completion of Drilling
Time After Drilling: ½ hour
Depth to Water: 2'
Depth to Cave In

GENERAL NOTES

Start 6/5/80 Complete 6/5/80
Crew Chief JWG Rig 55
Drilling Method: Hollow Stem Auger

6

Canonie Soil Boring Logs

Canonie

BORING LOG

PROJECT No. 87-126-01
BORING No. S-1A
LOGGED BY K. Chirbas
PAGE No. 1 of 1

PROJECT NAME WAUKEGAN HARBOR
BORING LOCATION N 4577.2774 E 4965.7335 SURFACE ELEVATION 584.64
DRILLER Fox Drilling, Inc. DATE: START 12/30/88 FINISH 1/4/89

DEPTH	SAMPLE No	SAMPLE TYPE	INTERVAL FROM	INTERVAL TO	BLOW COUNT 0" to 6"	BLOW COUNT 6" to 12"	BLOW COUNT 12" to 18"	REC (in)	USCS SOIL TYPE	WC (%)	qu (TSF)	LAYER DEPTH	SOIL DESCRIPTION AND REMARKS	PIEZO
												2.0	(0.2 Ft. Gravel Surface.) (Black Fine Sand.)	
5	1	SS	4.5	6.5	4	7	10	22	SP				Medium Dense Brown Fine Sand	
					9									
10	2	SS	9.5	11.5	10	15	18	20	SP			9.5		
					23									
15	3	SS	15.0	17.0	15	20	21	23	SP				Dense To Very Dense Gray Fine Sand	
					26									
20	4	SS	20.0	22.0	16	18	20	23	SP					
					25									
25	5	SS	25.0	25.8	20	110/3		8	SP				Trace Of Coarse Sand From 25.0 To 25.8 Ft.	
												26.3	Bottom Of Boring At 26.3 Ft	
30													Notes: 1. Boring Was Advanced By Rotary Wash Method Using A 6-in. Dia. Roller Bit. 2. Ground Water Was Encountered At 4.5 Ft. Below Ground Surface. 3. Upon Completion, Boring Was Backfilled With Cement / Bentonite Grout From 26.3 Ft. To Ground Surface 4. Boring Could Not Be Advanced Further Because Of An Obstruction.	

Rev. 8-88

Canonie

BORING LOG

PROJECT No. 87-126-01
BORING No. S-1B
LOGGED BY K. Chirbas
PAGE No. 1 of 2

PROJECT NAME WAUKEGAN HARBOR
BORING LOCATION N 4575.0301 E 4977.5269 SURFACE ELEVATION 584.18
DRILLER Fox Drilling, Inc. DATE: START 1/4/89 FINISH 1/6/89

DEPTH	No.	TYPE	INTERVAL FROM	INTERVAL TO	BLOW COUNT 0"	BLOW COUNT 6"	BLOW COUNT 12"	REC (in)	USCS SOIL TYPE	WC (%)	qu (TSF)	LAYER DEPTH	SOIL DESCRIPTION AND REMARKS	PIEZO
5														
10													See Boring Log S-1A For Soil Details	
15														
20												20.0		
	1	SS	20.0	22.0	18	25	35	20	SP				Very Dense Gray Fine Sand.	
					35									
25													Odor In Sample No. 1. Some Fine To Coarse Gravel From 25.0 To 25.5 Ft.	
	2	SS	25.0	26.4	70	86	105/5	12	SP/CL		>4.5	25.5		
30													Hard Gray Silty Clay, Trace Of Coarse Gravel 2-In. Layer Of Clayey Fine Sand At 30.4 Ft.	
	3	SS	30.0	32.0	50	75	88	20	CL		>4.5			
					85								Trace Of Fine To Coarse Sand From 30.6 Ft. To 35.0 Ft.	
35												35.0		
	4	SS	35.0	37.0	25	35	45	24	CL		>4.5			
					45									
	5	PB	37.0	39.0				14	CL				Hard Mottled Gray Silty Clay, Trace Of Fine To Coarse Sand.	
40	6	SS	39.0	40.3	52	74	112/3	15	CL		>4.5			

Rev. 8-88

Canonie

BORING LOG

PROJECT No. 87-126-01
BORING No. S-1B
LOGGED BY K Chirbas
PAGE No. 2 of 2

PROJECT NAME WAUKEGAN HARBOR
BORING LOCATION N 4575.0301 E 4977.5269 SURFACE ELEVATION 584 18
DRILLER Fox Drilling, Inc. DATE: START 1/4/89 FINISH 1/6/89

DEPTH	SAMPLE No.	SAMPLE TYPE	INTERVAL FROM	INTERVAL TO	BLOW COUNT 0" 6"	BLOW COUNT 6" 12"	BLOW COUNT 12" 18"	REC (in)	USCS SOIL TYPE	WC (%)	qu (TSF)	LAYER DEPTH	SOIL DESCRIPTION AND REMARKS	PIEZO
	7	SS	41 0	43.0	50	55	93	22	CL		>4.5		Hard Gray Silty Clay, Trace Of Fine To Coarse Sand.	
					90									
	8	PB	43.0	45.0				10	CL					
45												45.0		
	9	SS	45.0	47.0	54	46	38	20	CL		>4 5		Hard Mottled Gray Silty Clay, Trace Of Fine Sand	
					34									
	10	SS	47.0	49.0	25	30	30	21	CL		>4.5			
					30							49.0		
50	11	SS	49.0	51.0	6	20	30	10	CL		2.50			
					28								Very Stiff Mottled Brown Silty Clay, Trace Of Fine Sand.	
	12	SS	51.0	53.0	11	17	27	5	CL		2.50			
					29							53.0		
	13	SS	53.0	55.0	10	20	22	20	CL		4.00		Hard Mottled Gray Silty Clay, Trace Of Fine To	
55					30							55.0	Coarse Sand.	
													Bottom Of Boring At 55.0 Ft.	
													Notes:	
60													1 Boring Was Advanced By Rotary Wash Method Using A 6-in. Dia. Bit.	
													2. Ground Water Was Encountered At 4 5 FT Below Ground Surface.	
													3. Upon Completion, Boring Was Backfilled With Cement / Bentonite Grout From 55.0 FT. To Ground Surface.	

Rev. 8-88

Canonie

BORING LOG

PROJECT No. 87-126
BORING No. S-2
LOGGED BY K. Chirbas
PAGE No. 1 of 2

PROJECT NAME WAUKEGAN HARBOR
BORING LOCATION N 4479.0912 E 5227.7896 SURFACE ELEVATION 584.31
DRILLER Fox Drilling, Inc. DATE: START 1/11/89 FINISH 1/12/89

DEPTH	SAMPLE No.	SAMPLE TYPE	INTERVAL FROM	INTERVAL TO	BLOW COUNT 0" 6" 6"	BLOW COUNT 6" 12" 12"	BLOW COUNT 12" 18" 18"	REC (in)	USCS SOIL TYPE	WC (%)	qu (TSF)	LAYER DEPTH	SOIL DESCRIPTION AND REMARKS	PIEZO
												1.0	(Gravel)	
5	1	SS	4.5	6.5	6	8	11	15	SW				Medium Dense Black Fine To Coarse Sand	
					5								Odor And Oily Appearance In Sample No. 1	
10	2	SS	9.5	11.5	11	17	19	18	SW/SP			10.0		
					22								Dense Gray Fine Sand	
													Odor In Sample No. 2.	
15												15.0		
	3	SS	15.0	17.0	17	17	22	18	SP				Dense Brown Fine Sand.	
					27								Odor And Oily Appearance In Sample No. 3.	
20												20.0		
	4	SS	20.0	22.0	14	18	25	24	SP				Dense To Very Dense Gray Fine Sand.	
					30									
	5	SS	23.0	25.0	16	19	25	18	SP					
25					26								2-In. Layer Of Fine To Coarse Sand At 26.5 Ft.	
	6	SS	26.0	27.2	13	50	100/3	14	SP					
												28.0		
	7	SS	28.0	30.0	50	80	80	12	CL		>4.5			
30					85									
	8	SS	30.0	32.0	15	35	50	14	CL		>4.5			
					95									
	9	PB	32.0	34.0				22	CL				Hard Gray Silty Clay, Trace Of Fine Sand From 28.0 To 30.0 Ft.	
35	10	PB	34.0	36.0				24	CL					
	11	SS	36.0	38.0	23	44	56	14	CL		>4.5			
					59							38.0		
													Bottom Of Boring At 38.0 FT.	
40														

Rev. 8-88

Canonie

BORING LOG

PROJECT No. 87-126-01
BORING No. S-2
LOGGED BY K. Chirbas
PAGE No. 2 of 2

PROJECT NAME WAUKEGAN HARBOR
BORING LOCATION N 4479.0912 E 5227.7896 SURFACE ELEVATION 584.31
DRILLER Fox Drilling, Inc. DATE: START 1/11/89 FINISH 1/12/89

DEPTH	SAMPLE No.	SAMPLE TYPE	SAMPLE INTERVAL FROM	SAMPLE INTERVAL TO	BLOW COUNT 0" to 6"	BLOW COUNT 6" to 12"	BLOW COUNT 12" to 18"	REC (in)	USCS SOIL TYPE	WC (%)	qu (TSF)	LAYER DEPTH	SOIL DESCRIPTION AND REMARKS	PIEZO
													Notes: 1. Boring Was Advanced By Rotary Wash Method Using 6-in. Dia. Roller Bit. 2. Ground Water Was Encountered At 4 0 Ft. Below Ground Surface. 3. Upon Completion, Boring Was Backfilled With Cement / Bentonite Grout From 38.0 Ft. To Ground Surface.	

Rev. 8-88

Canonie

BORING LOG

PROJECT No. 87-126-0
BORING No. S-3
LOGGED BY K. Chirbas
PAGE No. 1 of 2

PROJECT NAME WAUKEGAN HARBOR
BORING LOCATION N 4315.2277 E 5058.0481 SURFACE ELEVATION 584 08
DRILLER Fox Drilling, Inc. DATE: START 1/18/89 FINISH 1/19/89

DEPTH	SAMPLE No.	SAMPLE TYPE	INTERVAL FROM	INTERVAL TO	BLOW COUNT 0" - 6"	BLOW COUNT 6" - 12"	BLOW COUNT 12" - 18"	REC (in)	USCS SOIL TYPE	WC (%)	qu (TSF)	LAYER DEPTH	SOIL DESCRIPTION AND REMARKS	PIEZO
												1.0	(Gravel)	
5	1	SS	4.5	6.5	2	4	10	18	SP				Medium Dense Brown Fine Sand	
					17									
10	2	SS	9.5	11.5	20	26	21	19	SP			9.5		
						22								
15													Dense Black Fine Sand	
	3	SS	15.0	17.0	14	21	22	16	SP				Odor And Oily Appearance In Sample No 3	
					14								Odor And Oily Appearance in Sample No 4	
20	4	SS	20.0	22.0	20	22	26	22	SP					
					32							24.0		
25	5	SS	25.0	26.9	26	30	72	12	CL		4.25		Hard Light Gray Silty Clay. 2-In Layer Of Coarse Gravel At 25.5 Ft.	
					50/5									
	6	SS	27.0	29.0	20	36	50	20	CL		>4.5			
					74							29.0		
30	7	SS	29.0	31.0	30	20	60	20	CL		>4.5			
					57									
	8	SS	31.0	33.0	41	80	97	21	CL		>4.5			
					56									
	9	PB	33.0	35.0				9	CL					
35														
	10	SS	35.0	37.0	15	29	43	24	CL		>4.5		Hard Mottled Gray Silty Clay, Trace Of Fine Sand From 31.0 To 45.0 Ft.	
					42									
	11	SS	37.0	39.0	13	24	46	0						
					50									
40	12	SS	39.0	41.0	38	60	56	24	CL		4.25			
					64									

Rev. 8-88

Canonie

BORING LOG

PROJECT No. 87-126-01
BORING No. S-3
LOGGED BY K. Chirbas
PAGE No. 2 of 2

PROJECT NAME WAUKEGAN HARBOR
BORING LOCATION N 4315.2277 E 5058.0481 SURFACE ELEVATION 584.08
DRILLER Fox Drilling, Inc. DATE: START 1/18/89 FINISH 1/19/89

DEPTH	SAMPLE No.	SAMPLE TYPE	INTERVAL FROM	INTERVAL TO	BLOW COUNT 0" 6"	BLOW COUNT 6" 12"	BLOW COUNT 12" 18"	REC (in)	USCS SOIL TYPE	WC (%)	qu (TSF)	LAYER DEPTH	SOIL DESCRIPTION AND REMARKS
	13	PB	41.0	43.0				0					
	14	SS	43.0	45.0	11	22	30	24	CL		>4.5	45.0	Hard Mottled Gray Silty Clay, Trace Of Fine Sand.
45					48								
													Bottom Of Boring At 45.0 Ft.
													Notes:
50													1. Boring was Advanced By Rotary Wash Method Using A 6-in. Dia. Roller Bit.
													2. Ground Water Was Encountered At 4.0 Ft. Below Ground Surface.
													3. Upon Completion, Boring Was Backfilled With Cement / Bentonite Grout From 45.0 Ft. To Ground Surface.

Rev. 8-88

Canonie

BORING LOG

PROJECT No. 87-126-[illegible]
BORING No. S-4
LOGGED BY K. Chirbas
PAGE No. 1 of 2

PROJECT NAME WAUKEGAN HARBOR
BORING LOCATION N 4318.4113 E 5241.3417 SURFACE ELEVATION 584.80
DRILLER Fox Drilling, Inc. DATE: START 1/13/89 FINISH 1/17/89

DEPTH	SAMPLE No	TYPE	INTERVAL FROM	INTERVAL TO	BLOW COUNT 0"	6"	12"	REC (in)	USCS SOIL TYPE	WC (%)	qu (TSF)	LAYER DEPTH	SOIL DESCRIPTION AND REMARKS	FIELD
5	1	SS	4.5	6.5	8	8	5	15	SP				Medium Dense Black Fine Sand	
					7									
10	2	SS	9.5	11.5	11	13	16	18	SP			9.5		
					18								Medium Dense To Dense Dark Gray Fine Sand	
15	3	SS	15.0	17.0	14	18	20	20	SP					
					20									
20	4	SS	20.0	22.0	16	20	25	21	SP			20.0	Dense Black Fine Sand. 2-In. Layer Of Fine To Coarse Sand At 20.5 Ft.	
					30									
25	5	SS	25.0	27.0	17	24	20	19	SP			25.0	Dense Dark Gray Fine Sand. Odor In Sample No. 5.	
					20							27.5		
30	6	SS	28.0	30.0	16	30	40	21	CL		>4.5		Hard Gray Silty Clay, Trace Of Fine Sand.	
					50									
	7	PB	30.0	32.0				19	CL			32.0		
	8	SS	32.0	34.0	32	53	83	20	CL		>4.5			
					80									
35	9	SS	34.0	36.0	22	48	32	21	CL		>4.5		Hard Mottled Gray Silty Clay, Trace Of Fine Sand From 34.0 To 38.0 Ft.	
					34									
	10	PB	36.0	38.0				16	CL			38.0		
	11	SS	38.0	40.0	20	31	36	24	CL		>4.5		Hard Gray Silty Clay	
40					30							40.0		
													Same As Below	

Rev. 8-88

Canonie

BORING LOG

PROJECT No. 87-126-01
BORING No. S-4
LOGGED BY K Chirbas
PAGE No. 2 of 2

PROJECT NAME WAUKEGAN HARBOR
BORING LOCATION N 4318.4113 E 5241.3417 SURFACE ELEVATION 584 80
DRILLER Fox Drilling, Inc. DATE: START 1/13/89 FINISH 1/17/89

DEPTH	SAMPLE No	SAMPLE TYPE	INTERVAL FROM	INTERVAL TO	BLOW COUNT 0"	BLOW COUNT 6"	BLOW COUNT 12"	REC (in)	USCS SOIL TYPE	WC (%)	qu (TSF)	LAYER DEPTH	SOIL DESCRIPTION AND REMARKS	PIEZO
	12	SS	40.0	42.0	11	20	33	19	CL		>4.5			
					43									
	13	SS	42.0	44.0	7	16	28	16	CL		4 25		Hard Mottled Gray Silty Clay	
					42									
45	14	SS	44 0	46.0	17	22	32	18	CL		4 25			
					50									
	15	SS	46 0	48.0	16	24	40	21	CL		>4 5			
					31							48.0		
													Bottom Of Boring At 48 0 Ft.	
50													Notes:	
													1 Boring Was Advanced By Rotary Wash Method Using A 6-in Dia. Roller Bit	
													2. Ground Water Was Encountered At 4 0 Ft Below Ground Surface.	
													3. Upon Completion, Boring Was Backfilled With Cement / Bentonite Grout From 48 0 Ft To Ground Surface.	

Rev. 8-88

Canonie

BORING LOG

PROJECT No. 87-126-01
BORING No. S-5
LOGGED BY P Romzick
PAGE No. 1 of 2

PROJECT NAME WAUKEGAN HARBOR
BORING LOCATION N 4398.9214 E 4660.0485 SURFACE ELEVATION 584 07
DRILLER Fox Drilling, Inc. DATE: START 1/17/89 FINISH 1/17/89

DEPTH	SAMPLE No.	SAMPLE TYPE	SAMPLE INTERVAL FROM	SAMPLE INTERVAL TO	BLOW COUNT 0" 6" 6"	BLOW COUNT 6" 12" 12"	BLOW COUNT 12" 18"	REC (in)	USCS SOIL TYPE	WC (%)	qu (TSF)	LAYER DEPTH	SOIL DESCRIPTION AND REMARKS	PIEZO
5	1	SS	3.5	5.0	5	6	7	8	SP				Medium Dense Light Brown Fine To Medium Sand	
												8.5		
10	2	SS	8.5	10.0	3	5	7	16	SP				Loose To Medium Dense Brown Fine Sand (6 In. Gravel Layer At 12.0 Ft)	
15	3	SS	13.5	15.0	7	6	8	6	SP					
20	4	SS	18.5	20.0	4	3	5	8	SP	25			Trace Of Medium Sand And Fine Gravel From 18.5 To 23.0 Ft. (Gravel Encountered At 23.0 Ft.)	
25	5	SS	23.5	25.0	51	24	22	12	CL		>4.5	24.5		
	6	SS	25.0	27.0	18	28	33	24	CL	15	>4.5		Hard Silty Clay, Some Fine Gravel From 24.5 To 25.0 Ft.	
					89									
	7	SS	28.0	30.0	70	85	90	22	CL		>4.5			
30					100									
	8	SS	30.0	31.9	25	35	73	23	CL		>4.5			
					100/5									
	9	SS	32.0	34.0	44	60	30	21	CL		>4.5		Trace Of Fine Gravel From 32.0 To 34.5 Ft.	
					30									
35	10	SS	34.0	36.0	8	15	20	19	CL		>4.5			
					42								Trace Of Coarse Sand From 34.5 To 38.5 Ft.	
	11	SS	36.0	38.0	18	17	21	0						
					33									
40	12	SS	38.5	40.5	13	24	38	22	CL		>4.5			
					56									

Rev. 8-88

Canonie

BORING LOG

PROJECT No. 87-126-01
BORING No. S-5
LOGGED BY P Romzick
PAGE No. 2 of 2

PROJECT NAME WAUKEGAN HARBOR
BORING LOCATION N 4398.9214 E 4660.0485 SURFACE ELEVATION 584.07
DRILLER Fox Drilling, Inc. DATE: START 1/17/89 FINISH 1/17/89

DEPTH	SAMPLE No	SAMPLE TYPE	INTERVAL FROM	INTERVAL TO	BLOW COUNT 0"	BLOW COUNT 6"	BLOW COUNT 12"	REC (in)	USCS SOIL TYPE	WC (%)	qu (TSF)	LAYER DEPTH	SOIL DESCRIPTION AND REMARKS	PIEZO
	13	SS	40.5	42.5	14	22	33	24	CL				Hard Gray Silty Clay.	
					54							42.5		
45													Bottom Of Boring At 42.5 Ft.	
													Notes:	
													1 Boring Was Advanced By Rotary Wash Method Using A 3-In. Dia Roller Bit.	
													2. Ground Water Was Encountered At 3.2 Ft. Below Ground Surface.	
													3. Upon Completion, Boring Was Backfilled With Cement / Bentonite Grout From 42.5 Ft. Ground Surface.	

Rev. 8-88

Canonie

BORING LOG

PROJECT No. 87-126-01
BORING No. S-6A
LOGGED BY P. Romzick
PAGE No. 1 of 1

PROJECT NAME WAUKEGAN HARBOR
BORING LOCATION N 4641.1451 E 4578.8412 SURFACE ELEVATION 585.11
DRILLER Fox Drilling, Inc. DATE: START 1/19/89 FINISH 1/19/89

DEPTH	SAMPLE No.	SAMPLE TYPE	INTERVAL FROM	INTERVAL TO	BLOW COUNT 0" 6"	BLOW COUNT 6" 12"	BLOW COUNT 12" 18"	REC (in)	USCS SOIL TYPE	WC (%)	qu (TSF)	LAYER DEPTH	SOIL DESCRIPTION AND REMARKS	PIEZO
5	1	SS	3.5	5.0	3	2	3	14	SP				Loose To Medium Dense Dark Brown Fine Sand, Some Coarse Sand.	
10	2	SS	8.5	10.0	2	5	6	14	SP				Some Slag And Cinders From 10.0 To 13 0 Ft	
												13.0	Bottom Of Boring At 13.0 Ft	
15													Notes: 1. Boring Was Advanced By Rotary Wash Method Using A 6-in. Dia Roller Bit. 2. Ground Water Was Encountered At 3.2 Ft. Below Ground Surface. 3. Upon Completion, Boring Was Backfilled With Cement / Bentonite Grout From 13.0 Ft. To Ground Surface. 4. Boring Could Not Be Advanced Because Of Obstruction At 13.0 Ft.	

Rev. 8-88

Canonie

BORING LOG

PROJECT No. 87-126-01
BORING No. S-6B
LOGGED BY P Romzick
PAGE No. 1 of 2

PROJECT NAME WAUKEGAN HARBOR
BORING LOCATION N 4645.3245 E 4575.0751 SURFACE ELEVATION 585.03
DRILLER Fox Drilling, Inc. DATE: START 1/19/89 FINISH 1/20/89

DEPTH	SAMPLE No.	SAMPLE TYPE	INTERVAL FROM	INTERVAL TO	BLOW COUNT 0" 6"	BLOW COUNT 6" 12"	BLOW COUNT 12" 18"	REC (in)	USCS SOIL TYPE	WC (%)	qu (TSF)	LAYER DEPTH	SOIL DESCRIPTION AND REMARKS	PIEZO
5													See Boring Log S-6A For Details.	
10												13.0		
15	1	SS	13.5	15.0	12	11	7	0					Medium Dense Gray Fine Sand.	
20	2	SS	18.5	20.0	7	7	22	16	SP			24.0		
25	3	SS	23.5	25.5	11	11	20	15	SP/CL					
					51									
	4	PB	28.5	28.0				28	CL				Hard Gray Silty Clay.	
	5	SS	28.0	28.8	66	86/3		9	CL		>4.5			
30	6	PB	29.0	31.5				14	CL					
	7	SS	31.5	33.5	43	54	66		CL		>4.5			
					43							33.5		
35													Bottom Of Boring At 33.5 Ft.	
40														

Rev. 8-88

Canonie

BORING LOG

PROJECT No. 87-126-01
BORING No. S-6B
LOGGED BY P. Romzick
PAGE No. 2 of 2

PROJECT NAME WAUKEGAN HARBOR
BORING LOCATION N 4645.3245 E 4575.0751 SURFACE ELEVATION 585.03
DRILLER Fox Drilling, Inc. DATE: START 1/19/89 FINISH 1/20/89

DEPTH	SAMPLE No.	SAMPLE TYPE	SAMPLE INTERVAL FROM	SAMPLE INTERVAL TO	BLOW COUNT 0" to 6"	BLOW COUNT 6" to 12"	BLOW COUNT 12" to 18"	REC (in)	USCS SOIL TYPE	WC (%)	qu (TSF)	LAYER	DEPTH	SOIL DESCRIPTION AND REMARKS	PIEZO
														Notes: 1. Boring Was Advanced By Rotary Wash Method Using A 6-in. Dia Roller Bit. 2. Ground Water Was Encountered At 3.2 Ft. Below Ground Surface. 3. Upon Completion, Boring Was Backfilled With Cement / Bentonite Grout From 33.5 Ft. To Ground Surface.	

Rev. 8-88

Canonie

BORING LOG

PROJECT No. 87-126-01
BORING No. S-7
LOGGED BY P Romzick
PAGE No. 1 of 2

PROJECT NAME WAUKEGAN HARBOR
BORING LOCATION N 4780.1219 E 4453.4082 SURFACE ELEVATION 585 49
DRILLER Fox Drilling, Inc. DATE: START 1/18/89 FINISH 1/19/89

DEPTH	SAMPLE No.	SAMPLE TYPE	INTERVAL FROM	INTERVAL TO	BLOW COUNT 0" to 6"	BLOW COUNT 6" to 12"	BLOW COUNT 12" to 18"	REC (in)	USCS SOIL TYPE	WC (%)	qu (TSF)	LAYER DEPTH	SOIL DESCRIPTION AND REMARKS	PIEZO
5	1	SS	3.5	5.0	12	11	15	15	SP				Medium Dense To Very Dense Brown Fine Sand, Trace Of Fine Gravel From 3.5 To 5 0 Ft	
10	2	SS	8.5	10.0	5	12	33	16	SP					
15	3	SS	13.5	15.0	19	27	28	15	SP	23				
												18.5		
20	4	SS	18.5	20.0	15	22	26	14	SP				Dense Gray Fine Sand.	
												23.2		
25	5	SS	23.5	25.5	12	15	18	19	CL					
					19									
	6	PB	25.5	28.0				19	CL		>4.5		Hard Gray Silty Clay, Trace Of Fine Sand From 23.5 To 25.5 Ft.	
	7	PB	28.0	30.5				14	CL					
30														
	8	SS	30.5	32.5	31	34	61	22	CL		>4.5			
					103							32.5		
35													Bottom Of Boring At 32.5 Ft.	
40														

Rev. 8-88

Canonie

BORING LOG

PROJECT No. 87-126-0
BORING No. S-7
LOGGED BY P. Romzick
PAGE No. 2 of 2

PROJECT NAME WAUKEGAN HARBOR
BORING LOCATION N 4780.1219 E 4453.4082 SURFACE ELEVATION 585.49
DRILLER Fox Drilling, Inc. DATE: START 1/18/89 FINISH 1/19/89

DEPTH	SAMPLE No.	SAMPLE TYPE	INTERVAL FROM	INTERVAL TO	BLOW COUNT 0" to 6"	BLOW COUNT 6" to 12"	BLOW COUNT 12" to 18"	REC (in)	USCS SOIL TYPE	WC (%)	qu (TSF)	LAYER DEPTH	SOIL DESCRIPTION AND REMARKS	PIEZO
													Notes: 1. Boring Was Advanced By Rotary Wash Method Using A 6-in. Dia. Roller Bit. 2. Ground Water Was Encountered At 3.2 Ft. Below Ground Surface. 3. Upon Completion, Boring Was Backfilled With Cement / Bentonite Grout From 32.5 Ft. To Ground Surface.	

Rev. 8-88

BORING LOG

PROJECT No. 87-126-01
BORING No. S-8
LOGGED BY P. Romzick
PAGE No. 1 of 2

PROJECT NAME WAUKEGAN HARBOR
BORING LOCATION N 4891.6787 E 4314.9116 SURFACE ELEVATION 584.26
DRILLER Fox Drilling, Inc. DATE: START 1/18/89 FINISH 1/18/89

DEPTH	SAMPLE No	SAMPLE TYPE	INTERVAL FROM	INTERVAL TO	BLOW COUNT 0" 6" 6" 12" 12" 18"	REC (in)	USCS SOIL TYPE	WC (%)	qu (TSF)	LAYER DEPTH	SOIL DESCRIPTION AND REMARKS	PIEZ
5	1	SS	3.5	5.0	3 4 12	12	SP				Medium Dense Dark Brown Fine To Coarse Sand, Trace Of Fine Gravel.	
										8.5		
10	2	SS	8.5	10.0	11 16 22	14	SP				Medium Dense To Dense Light Brown Fine Sand.	
15	3	SS	13.5	15.0	8 8 10	11	SP					
										18.5		
20	4	SS	18.5	20.0	17 22 20	15	SP				Dense Gray Fine Sand. (Gravel At 21.3 Ft.)	
										21.7	Hard Gray Silty Clay, Trace Of Fine To Coarse Sand.	
	5	SS	22.0	23.5	15 23 26	14	CL		>4.5		2-In. Layer Gray Clayey Fine Sand, Trace Of Fine Gravel At 25.0 Ft.	
25	6	SS	24.0	26.0	14 63 63	24	CL		>4.5			
					73							
	7	SS	26.0	27.9	18 18 27	18	CL	13	>4.5			
					100/4							
	8	SS	28.0	30.0	20 30 41	24	CL		>4.5			
30					59							
	9	SS	30.0	32.0	20 26 34	16	CL					
					37					32.0		
											Bottom Of Boring At 32.0 Ft.	
35												
40												

Rev. 8-88

Canonie

BORING LOG

PROJECT No. 87-126-01
BORING No. S-8
LOGGED BY P. Romzick
PAGE No. 2 of 2

PROJECT NAME WAUKEGAN HARBOR
BORING LOCATION N 4891.6787 E 4314.9116 SURFACE ELEVATION 584.26
DRILLER Fox Drilling, Inc. DATE: START 1/18/89 FINISH 1/18/89

DEPTH	SAMPLE No.	SAMPLE TYPE	SAMPLE INTERVAL FROM	SAMPLE INTERVAL TO	BLOW COUNT 0" 6"	BLOW COUNT 6" 12"	BLOW COUNT 12" 18"	REC (in)	USCS SOIL TYPE	WC (%)	qu (TSF)	LAYER	DEPTH	SOIL DESCRIPTION AND REMARKS	PIEZO
														Notes: 1. Boring Was Advanced By Rotary Wash Method Using A 3-in. Dia. Roller Bit. 2. Ground Water Was Encountered At 1.7 Ft. Below Ground Surface. 3. Upon Completion, Boring Was Backfilled With Cement / Bentonite Grout From 32.0 Ft. To Ground Surface.	

Rev. 8-88

Canonie

BORING LOG

PROJECT No. 87-126-01
BORING No. S-9
LOGGED BY P Romzick
PAGE No. 1 of 2

PROJECT NAME WAUKEGAN HARBOR
BORING LOCATION N 4956.0864 E 4427.9251 SURFACE ELEVATION 583.37
DRILLER Fox Drilling, Inc. DATE: START 1/13/89 FINISH 1/17/89

DEPTH	SAMPLE No.	SAMPLE TYPE	INTERVAL FROM	INTERVAL TO	BLOW COUNT 0" 6"	BLOW COUNT 6" 12"	BLOW COUNT 12" 18"	REC (in)	USCS SOIL TYPE	WC (%)	qu (TSF)	LAYER DEPTH	SOIL DESCRIPTION AND REMARKS	PIEZO
5	1	SS	3.5	5.0	4	5	4	12	SP					
10	2	SS	8.5	10.0	2	3	2	14	SP				Loose To Medium Dense Dark Brown Fine Sand	
15	3	SS	13.5	15.0	7	8	13	11	SP				Trace Of Coarse Sand From 13 5 To 18 5 Ft	
20	4	SS	18.5	20.0	10	7	6	13	SM	27			(Gravel At 21.8 Ft.)	
												22.0	Very Dense Gray Clayey Silt, Some Fine To	
	5	SS	22.5	24 0	41	38	46	14	ML	12	>4.5	24.0	Coarse Sand, Trace Fine Gravel	
25	6	SS	24.0	24.6	15	100/1		6	CL		>4.5		(Hit A Cobble At 24.6 Ft.)	
	7	SS	25.0	27.0	41	55	63	24	CL		>4.5		Hard Gray Silty Clay, Trace Of Fine Gravel From	
					54								24.0 To 24.6 Ft.	
	8	SS	27.0	29.0	16	35	70	24	CL		>4.5			
					99									
30	9	SS	29.0	30.4	32	40	100/5	17	CL		>4.5			
													Some Fine Gravel From 30.5 To 33.0 Ft	
	10	SS	31.0	33.0	44	31	40	19	CL		>4.5			
					38							33.0		
35													Bottom Of Boring At 33.0 Ft.	
40														

Rev. 8-88

Canonie

BORING LOG

PROJECT No. 87-126-0*
BORING No. S-9
LOGGED BY P. Romzick
PAGE No. 2 of 2

PROJECT NAME WAUKEGAN HARBOR
BORING LOCATION N 4956.0864 E 4427.9251 SURFACE ELEVATION 583.37
DRILLER Fox Drilling, Inc. DATE: START 1/13/89 FINISH 1/17/89

DEPTH	SAMPLE No.	SAMPLE TYPE	SAMPLE INTERVAL FROM	SAMPLE INTERVAL TO	BLOW COUNT 0" 6"	BLOW COUNT 6" 12"	BLOW COUNT 12" 18"	REC (in)	USCS SOIL TYPE	WC (%)	qu (TSF)	LAYER DEPTH	SOIL DESCRIPTION AND REMARKS	PIEZO
													Notes: 1. Boring Was Advanced By Rotary Wash Method Using A 3-in. Dia Roller Bit. 2. Ground Water Was Encountered At 3.2 Ft. Below Ground Surface. 3. Upon Completion, Boring Was Backfilled With Cement / Bentonite Grout From 33.0 Ft. To Ground Surface.	

Rev. 8-88

Canonie

BORING LOG

PROJECT No. 87-126-01
BORING No. S-10
LOGGED BY P Romzick
PAGE No. 1 of 2

PROJECT NAME WAUKEGAN HARBOR
BORING LOCATION N 4870.0244 E 4542.3277 SURFACE ELEVATION 583.66
DRILLER Fox Drilling, Inc. DATE: START 1/12/89 FINISH 1/13/89

DEPTH	SAMPLE No.	TYPE	INTERVAL FROM	INTERVAL TO	BLOW COUNT 0"	BLOW COUNT 6"	BLOW COUNT 12"	REC (in)	USCS SOIL TYPE	WC (%)	qu (TSF)	LAYER DEPTH	SOIL DESCRIPTION AND REMARKS	PIEZO
5	1	SS	3.5	5.0	2	4	5	15	SP					
10	2	SS	8.5	10.0	2	12	25	18	SP	14			Loose To Dense Gray Fine Sand, Trace of Coarse Sand Between 3.5 To 5.0 Ft	
15	3	SS	13.5	15.0	19	20	18	15	SP				Some Coarse Sand And Fine Gravel From 8.5 To 10.0 Ft.	
20	4	SS	18.5	20.0	19	20	26	14	SP					
												22.5		
25	5	SS	22.5	24.5	15	23	27	24	CL	12	>4.5		Hard Gray Silty Clay.	
	6	SS	24.5	26.5	17	29	41	24	CL		>4.5		Some Fine To Coarse Sand, Trace Of Fine Gravel From 22.5 To 24.5 Ft.	
	7	SS	26.5	28.5	13	19	30	23	CL		>4.5			
30	8	SS	28.5	30.3	31	41	92	21	CL		>4.5			
	9	SS	30.5	31.3	92	100/4		10	CL		>4.5		Hard Gray Silty Clay, Trace Of Coarse Sand Between 30.5 To 40.5 Ft.	
	10	SS	32.5	32.9	100/5			5	CL		>4.5			
35	11	SS	34.5	36.5	37	33	40	22	CL		>4.5			
	12	SS	36.5	38.5	40	28	40	23	CL		>4.5			
40	13	SS	38.5	40.5	13	22	32	21	CL		>4.5			

Canonie

BORING LOG

PROJECT No. 87-126-01
BORING No. S-10
LOGGED BY P. Romzick
PAGE No. 2 of 2

PROJECT NAME WAUKEGAN HARBOR
BORING LOCATION N 4870.0244 E 4542.3277 SURFACE ELEVATION 583.66
DRILLER Fox Drilling, Inc. DATE: START 1/12/89 FINISH 1/13/89

DEPTH	SAMPLE No.	SAMPLE TYPE	INTERVAL FROM	INTERVAL TO	BLOW COUNT 0" 6"	BLOW COUNT 6" 12"	BLOW COUNT 12" 18"	REC (in)	USCS SOIL TYPE	WC (%)	qu (TSF)	LAYER DEPTH	SOIL DESCRIPTION AND REMARKS	PIEZO
	14	SS	40.5	42.5	15	24	42	24	CL		>4.5	42.5	Hard Gray Silty Clay.	
					52								Bottom Of Boring At 42.5 Ft.	
45													Notes:	
													1. Boring Was Advanced By Rotary Wash Method Using A 3-in. Dia Roller Bit.	
													2. Ground Water Was Encountered At 3.1 Ft. Below Ground Surface.	
													3. Upon Completion, Boring Was Backfilled With Cement / Bentonite Grout From 42.5 Ft. To Ground Surface.	

Rev. 8-88

Canonie

BORING LOG

PROJECT No. 87-126-01
BORING No. S-11
LOGGED BY M Obradovic
PAGE No. 1 of 2

PROJECT NAME WAUKEGAN HARBOR
BORING LOCATION N 4765.9767 E 4674.8341 SURFACE ELEVATION 583.40
DRILLER Fox Drilling, Inc. DATE: START 12/6/88 FINISH 12/7/88

DEPTH	SAMPLE No.	TYPE	INTERVAL FROM	INTERVAL TO	BLOW COUNT 0"	6"	12"	REC (In)	USCS SOIL TYPE	WC (%)	qu (TSF)	LAYER DEPTH	SOIL DESCRIPTION AND REMARKS	PIEZO
												0.2	(Gravel)	
5	1	SS	4.5	6.5	12	13	15	8	SP				Medium Dense Dark Gray To Black Fine Sand. Odor In Sample No. 1.	
					12									
10	2	SS	9.5	11.5	10	12	17	24	SP			9.5	Medium Dense Gray Fine Sand, Trace Of Fine To Coarse Gravel. Odor In Sample No. 2.	
					22									
15	3	SS	14.5	16.5	13	24	33	8	SM			14.5	Medium Dense To Very Dense Gray Silty Fine Sand.	
					37									
20	4	SS	20.0	22.0	12	14	16	24	SM					
					15									
	5	SS	22.0	22.8	12	9/4		9	SM/CL		4.00	22.5		
	6	SS	23.0	25.0	14	18	20	2	CL		>4.5		(Coarse Gravel From 22.5 To 23.0 Ft.)	
25					38									
	7	SS	25.0	27.0	14	20	24	24	CL		>4.5			
					41									
	8	SS	27.0	28.9	18	34	46	24	CL		>4.5		Very Stiff To Hard Gray Silty Clay, Trace Of Fine To Coarse Sand.	
					100/5									
30	9	SS	29.0	30.3	56	90	100/3	15	CL		>4.5			
	10	SS	31.0	32.5	43	82	92	18	CL		>4.5			
												32.5		
35													Bottom Of Boring At 32.5 Ft.	
40														

Rev. 8-88

Canonie

BORING LOG

PROJECT No. 87-126-0
BORING No. S-11
LOGGED BY M. Obradovic
PAGE No. 2 of 2

PROJECT NAME WAUKEGAN HARBOR
BORING LOCATION N 4765.9767 E 4674.8341 SURFACE ELEVATION 583.40
DRILLER Fox Drilling, Inc. DATE: START 12/6/88 FINISH 12/7/88

DEPTH	SAMPLE No.	SAMPLE TYPE	SAMPLE INTERVAL FROM	SAMPLE INTERVAL TO	BLOW COUNT 0" to 6"	BLOW COUNT 6" to 12"	BLOW COUNT 12" to 18"	REC (in)	USCS SOIL TYPE	WC (%)	qu (TSF)	LAYER DEPTH	SOIL DESCRIPTION AND REMARKS	PIEZO
													Notes: 1. Boring Was Advanced By Rotary Wash Method Using A 3-In. Dia. Roller Bit. 2. Ground Water Was Encountered At 4 5 Ft. Below Ground Surface. 3. Upon Completion, Boring Was Backfilled With Cement / Bentonite Grout From 32.5 Ft. To Ground Surface.	

Rev. 8-88

Canonie

BORING LOG

PROJECT No. 87-126-01
BORING No. S-12
LOGGED BY K. Chirbas
PAGE No. 1 of 2

PROJECT NAME WAUKEGAN HARBOR
BORING LOCATION N 4586.9866 E 4739.6468 SURFACE ELEVATION (Water) 580.27
DRILLER Fox Drilling, Inc. DATE: START 12/7/88 FINISH 12/7/88

DEPTH	SAMPLE No.	SAMPLE TYPE	INTERVAL FROM	INTERVAL TO	BLOW COUNT 0" - 6"	BLOW COUNT 6" - 12"	BLOW COUNT 12" - 18"	REC (in)	USCS SOIL TYPE	WC (%)	qu (TSF)	LAYER DEPTH	SOIL DESCRIPTION AND REMARKS	PIEZO
5														
10													Water	
15												17.0		
20													(Muck And Silt Build-Up On Harbor Floor)	
	1	SS	20.0	22.0				0				22.0		
	2	SS	22.0	24.0	45	57	80	16	CL		3.50		Very Stiff To Hard Gray Silty Clay.	
25	3	SS	24.0	26.0	43	53	56	24	CL		4.50			
					70								Trace Of Coarse Sand Between 27 0	
	4	PB	26.0	29.0				16					And 28.5 Ft. 2-In. Layer Fine To Coarse	
									CL				Gray Sand At 29.0 Ft.	
30	5	SS	29.0	31.0	14	30	41	20	CL		4.50			
					35								Trace Of Fine To Coarse Sand From	
	6	PB	31.0	34.0				21	CL				29.0 To 31.0 Ft.	
													Trace Of Fine Sand From 34.0 To 36.0 Ft.	
35	7	SS	34.0	36.0	10	12	25	12	CL		4.50			
					30									
	8	SS	36.0	38.0	8	13	30	12	CL		4.00		Some Fine To Coarse Sand From 36.0 To	
					25							37.8	38.0 Ft.	
	9	SS	38.0	40.0	18	30	48	24	SM		4.00	39.0	Gray Silty Fine To Coarse Sand.	
40					56				CL					
	10	SS	40.0	42.0	28	50	55	16	CL		4.50		Hard Gray Silty Clay, Trace Of Fine Sand.	
					42									

Rev. 8-88

Canonie

BORING LOG

PROJECT No. 87-126-01
BORING No. S-12
LOGGED BY K. Chirbas
PAGE No. 2 of 2

PROJECT NAME WAUKEGAN HARBOR
BORING LOCATION N 4586.9866 E 4739.6468 SURFACE ELEVATION (Water) 580.27
DRILLER Fox Drilling, Inc. DATE: START 12/7/88 FINISH 12/7/88

DEPTH	SAMPLE No.	SAMPLE TYPE	SAMPLE INTERVAL FROM	SAMPLE INTERVAL TO	BLOW COUNT 0" to 6"	BLOW COUNT 6" to 12"	BLOW COUNT 12" to 18"	REC (in)	USCS SOIL TYPE	WC (%)	qu (TSF)	LAYER DEPTH	SOIL DESCRIPTION AND REMARKS	PIEZO
												42.0	Same As Above.	
45													Bottom Of Boring At 42.0 Ft. Notes: 1. Boring Was Advanced By Rotary Wash Method Using A 6-in. Roller Bite. 2. The Depth From The Water Surface To The Harbor Floor is 17.0 Ft. 3. Upon Completion, Boring Was Backfilled With Cement / Bentonite Grout From 42.0 Ft. to Harbor Floor.	

Rev. 8-88

Canonie

BORING LOG

PROJECT No. 87-126-01
BORING No. S-13
LOGGED BY K. Chirbas
PAGE No. 1 of 2

PROJECT NAME WAUKEGAN HARBOR
BORING LOCATION N 4502.8529 E 4731.1051 SURFACE ELEVATION (Water) 580.27
DRILLER Fox Drilling, Inc. DATE: START 12/8/88 FINISH 12/8/88

DEPTH	SAMPLE No.	SAMPLE TYPE	SAMPLE INTERVAL FROM	SAMPLE INTERVAL TO	BLOW COUNT 0"	BLOW COUNT 6"	BLOW COUNT 12"	REC (in)	USCS SOIL TYPE	WC (%)	qu (TSF)	LAYER DEPTH	SOIL DESCRIPTION AND REMARKS	PIEZO
5													Water	
10														
15														
												18.0		
20													(Silt And Muck)	
												22.0		
	1	SS	22.0	24.0	10	14	21	10	CL		>4.5			
					30									
25	2	SS	24.0	26.0	22	26	29	6	CL		>4.5			
					32									
	3	SS	26.0	27.0	33	90		12	CL		>4.5			
													Hard Gray Silty Clay, Trace Of Fine To	
	4	SS	28.0	30.0	32	23	23	19	CL		>4.5		Coarse Sand.	
30					32									
	5	SS	30.0	32.0	12	22	35	19	CL		>4.5			
					36								3-In. Layer Of White Stone And Fine	
	6	PB	32.0	35.0									To Coarse Sand At 31.5 Ft.	
								18	CL					
35														
	7	SS	35.0	36.5	36	41	100	12	CL		>4.5			
													6-In. Layer Of Silty Fine To Coarse Sand	
	8	SS	37.0	38.4	26	42	100/5	12	CL		>4.5		At 35.0 Ft.	
40														
	9	PB	39.0	42.0										
								27	CL		>4.5			

Rev. 8-88

Canonie

BORING LOG

PROJECT No. 87-126-01
BORING No. S-13
LOGGED BY K. Chirbas
PAGE No. 2 of 2

PROJECT NAME WAUKEGAN HARBOR
BORING LOCATION N 4502.8529 E 4731.1051 SURFACE ELEVATION (Water) 580 27
DRILLER Fox Drilling, Inc. DATE: START 12/8/88 FINISH 12/8/88

DEPTH	SAMPLE No.	SAMPLE TYPE	SAMPLE INTERVAL FROM	SAMPLE INTERVAL TO	BLOW COUNT 0" to 6"	BLOW COUNT 6" to 12"	BLOW COUNT 12" to 18"	REC (in)	USCS SOIL TYPE	WC (%)	qu (TSF)	LAYER DEPTH	SOIL DESCRIPTION AND REMARKS	PIEZO
												42.0	Same As Above.	
45													Bottom Of Boring At 42.0 Ft.	
													Notes:	
													1. Boring Was Advanced By Rotary Wash Method Using 6-in. Dia. Roller Bit.	
													2. The Depth From The Water Surface To the Harbor Floor Is 18.0 Ft.	
													3. Upon Completion, Boring Was Backfilled With Cement / Bentonite Grout From 42.0 Ft. to Harbor Floor.	

Rev. 8-88

Canonie

BORING LOG

PROJECT No. 87-126-01
BORING No. S-14
LOGGED BY K. Chirbas
PAGE No. 1 of 2

PROJECT NAME WAUKEGAN HARBOR
BORING LOCATION N 5998.3788 E 6180.6763 SURFACE ELEVATION 584.92
DRILLER Fox Drilling, Inc. DATE: START 12/13/88 FINISH 12/13/88

DEPTH	SAMPLE No.	SAMPLE TYPE	INTERVAL FROM	INTERVAL TO	BLOW COUNT 0" 6" 6" 12" 12" 18"	REC (in)	USCS SOIL TYPE	WC (%)	qu (TSF)	LAYER DEPTH	SOIL DESCRIPTION AND REMARKS	PIEZO
5	1	SS	4.5	6.5	2 2 4 / 6	21	SP					
10	2	SS	9.5	11.5	9 16 24 / 38	23	SP				Loose To Very Dense Gray Fine Sand.	
15	3	SS	15.0	17.0	16 22 30 / 37	22	SP					
20	4	SS	20.0	22.0	15 20 23 / 22	19	SP			20.0		
25	5	SS	25.0	27.0	13 15 22 / 24	18	SP	24			Dense Mottled Brown Fine Sand, Trace Of Silt From 25.0 To 27.0 Ft	
30	6	SS	30.0	32.0	82 28 50 / 58	22	CL	13	>4.5	29.5	Hard Gray Silty Clay. 2-In. Layer Of Clayey	
	7	SS	32.0	34.0	30 40 50 / 51	21	CL		>4.5	34.0	Fine To Coarse Sand At 30.0 Ft. Trace Of Fine To Coarse Sand From 30.0 To 32.0 Ft.	
35	8	SS	34.0	35.8	32 50 38 / 51/4	22	SM/CL		>4.5	35.0	Gray Silty Fine Sand.	
	9	SS	36.0	37.0	60	12	CL		>4.5		Hard Gray Silty Clay Trace Of Fine To Coarse	
40	10	SS	38.0	40.0	40 50 50	19	CL		>4.5		Sand.	

Rev. 8-88

Canonie

BORING LOG

PROJECT No. 87-126-01
BORING No. S-14
LOGGED BY K Chirbas
PAGE No. 2 of 2

PROJECT NAME WAUKEGAN HARBOR
BORING LOCATION N 5998.3788 E 6180.6763 SURFACE ELEVATION 584.92
DRILLER Fox Drilling, Inc. DATE: START 12/13/88 FINISH 12/13/88

DEPTH	SAMPLE No.	SAMPLE TYPE	INTERVAL FROM	INTERVAL TO	BLOW COUNT 0" to 6"	BLOW COUNT 6" to 12"	BLOW COUNT 12" to 18"	REC (in)	USCS SOIL TYPE	WC (%)	qu (TSF)	LAYER DEPTH	SOIL DESCRIPTION AND REMARKS	PIEZO
	11	SS	40.0	41.4	18	38	81/5	17	CL		>4.5			
												42.0		
	12	SS	42.0	43.8	44	62	86	18	SM			43.0	Gray Silty Fine Sand.	
					60/4				CL		>4.5			
45	13	SS	44.0	45.3	23	56	75/3	15	CL		>4.5			
	14	SS	46.0	47.2	18	93	71/2	13	CL		>4.5		Hard Gray Silty Clay.	
	15	SS	48.0	49.2	25	92	75/2	14	CL		>4.5			
50														
	16	SS	50.0	50.9	60	120/5		11	CL		>4.5	51.0		
													Bottom Of Boring At 51.0 FT	
55													Notes: 1. Boring Was Advanced By Rotary Wash Method Using A 6-in. Roller Bit 2. Ground Water Was Encountered At 8.0 Ft. Below Ground Surface. 3. Upon Completion Boring Was Backfilled With Cement / Bentonite Grout From 51.0 Ft To Ground Surface	

Rev. 8-88

Canonie

BORING LOG

PROJECT No. 87-126-01
BORING No. S-15A
LOGGED BY M Obradovic
PAGE No. 1 of 2

PROJECT NAME WAUKEGAN HARBOR
BORING LOCATION N 5998.8590 E 5998.1945 SURFACE ELEVATION 585.60
DRILLER Fox Drilling, Inc. DATE: START 12/14/88 FINISH 12/21/88

DEPTH	SAMPLE No.	SAMPLE TYPE	INTERVAL FROM	INTERVAL TO	BLOW COUNT 0" to 6"	BLOW COUNT 6" to 12"	BLOW COUNT 12" to 18"	REC (in)	USCS SOIL TYPE	WC (%)	qu (TSF)	LAYER DEPTH	SOIL DESCRIPTION AND REMARKS	PIEZO
5	1	SS	3.5	5.0	8	10	13	18	SP				Medium Dense Brown Fine Sand, Trace Of Silt.	
10	2	SS	8.5	10.0	3	11	14	18	SP			9.5	Medium Dense Black Fine To Medium Sand.	
15	3	SS	13.5	15.0	11	17	22	18	SP			13.5	Dense Brown Gray Fine Sand.	
20	4	SS	18.5	20.0	13	23	27	18	SP			18.5	Dense Gray Fine Sand, Trace Of Silt.	
25	5	SS	23.5	25.0	17	18	20	18	SM			23.5	Dense Gray Silty Fine Sand.	
												27.5	(Coarse Gravel.)	
30	6	SS	28.5	29.5	26	14		12	GP/CL			28.8		
	7	SS	29.5	31	11	97	40	18			3.50			
	8	SS	31.5	32.5	35	58		12	CL		3.75		Very Stiff To Hard Gray Silty Clay, Trace Of Gravel.	
	9	SS	32.5	34.5	42	76	99						Trace Of Fine To Coarse Sand From 31.0 To 39.5 Ft.	
35	10	SS	34.5	36.5	100			17	CL		>4.5			
	11	SS	36.5	37.9	46	37	100/5	9	CL		>4.5			
	12	SS	38.0	39.4	18	47	100/5	3	CL					
40												39.5	Bottom Of Boring At 39.5 Ft.	

Rev. 8-88

Canonie

BORING LOG

PROJECT No. 87-126-01
BORING No. S-15A
LOGGED BY M Obradovic
PAGE No. 2 of 2

PROJECT NAME WAUKEGAN HARBOR
BORING LOCATION N 5998.8590 E 5988.1945 SURFACE ELEVATION 585.60
DRILLER Fox Drilling, Inc. DATE: START 12/14/88 FINISH 12/21/88

DEPTH	SAMPLE No.	SAMPLE TYPE	SAMPLE INTERVAL FROM	SAMPLE INTERVAL TO	BLOW COUNT 0" 6"	BLOW COUNT 6" 12"	BLOW COUNT 12" 18"	REC (In)	USCS SOIL TYPE	WC (%)	qu (TSF)	LAYER	DEPTH	SOIL DESCRIPTION AND REMARKS	PIEZO
														Notes: 1. Boring Was Advanced By Rotary Wash Method Using a 3-In. Dia Roller Bit. 2. Ground Water Was Encountered At 4 0 Ft Below Ground Surface. 3. Upon Completion, Boring Was Backfilled With Cement / Bentonite Grout From 39.5 Ft. To Ground Surface.	

Rev. 8-88

Canonie

BORING LOG

PROJECT No. 87-126-01
BORING No. S-15B
LOGGED BY P Romzick
PAGE No. 1 of 2

PROJECT NAME WAUKEGAN HARBOR
BORING LOCATION N 6000.8715 E 5983.1995 SURFACE ELEVATION 585.60
DRILLER Fox Drilling, Inc. DATE: START 1/9/89 FINISH 1/9/89

DEPTH	SAMPLE No.	SAMPLE TYPE	INTERVAL FROM	INTERVAL TO	BLOW COUNT 0" 6"	BLOW COUNT 6" 12"	BLOW COUNT 12" 18"	REC (in)	USCS SOIL TYPE	WC (%)	qu (TSF)	LAYER DEPTH	SOIL DESCRIPTION AND REMARKS	PIEZO
5													See Boring Log S-15A For Soil Details	
10														
15														
20														
25														
												27.4		
30	1	SS	28.2	30.2	7	11	17	0					(Gravel From 27.4 To 28.2 Ft)	
					21									
	2	SS	31.5	33.5	44	81	109	22	CL		>4.5	31.5		
					78								Hard Gray Silty Clay Trace Of Fine To Coarse Sand.	
35	3	SS	33.5	35.5	24	34	44	24	CL					
					54								A 4-In. Silty Fine Sand Layer At 38.5 Ft.	
	4	SS	35.5	37.5	23	36	37	24	CL		>4.5			
					53									
	5	SS	37.5	38.8	43	72	100/4	16	CL		>4.5			
40												38.8	Bottom Of Boring At 38.8 Ft.	

Rev. 8-88

Canonie

BORING LOG

PROJECT No. 87-126-✓
BORING No. S-15B
LOGGED BY P. Romzick
PAGE No. 2 of 2

PROJECT NAME WAUKEGAN HARBOR
BORING LOCATION N 6000.8715 E 5983.1995 SURFACE ELEVATION 585.60
DRILLER Fox Drilling, Inc. DATE: START 1/9/89 FINISH 1/9/89

DEPTH	SAMPLE No.	SAMPLE TYPE	SAMPLE INTERVAL FROM	SAMPLE INTERVAL TO	BLOW COUNT 0" 6" 6" 12"	BLOW COUNT 6" 12" 12" 18"	REC (in)	USCS SOIL TYPE	WC (%)	qu (TSF)	LAYER	DEPTH	SOIL DESCRIPTION AND REMARKS	PIEZO
													Notes: 1. Boring Was Advanced By Rotary Wash Method Using a 3-In. Dia Roller Bit. 2. Ground Water Was Encountered At 4.0 Ft. Below Ground Surface. 3. Upon Completion, Boring Was Backfilled With Cement / Bentonite Grout From 39.5 Ft. To Ground Surface.	

Rev. 8-88

Canonie

BORING LOG

PROJECT No. 87-126-01
BORING No. S-16
LOGGED BY K. Chirbas
PAGE No. 1 of 2

PROJECT NAME WAUKEGAN HARBOR
BORING LOCATION N 5993.1966 E 5779.5492 SURFACE ELEVATION 585.54
DRILLER Fox Drilling, Inc. DATE: START 12/14/88 FINISH 12/14/88

DEPTH	SAMPLE No	SAMPLE TYPE	INTERVAL FROM	INTERVAL TO	BLOW COUNT 0" 6"	BLOW COUNT 6" 12"	BLOW COUNT 12" 18"	REC (in)	USCS SOIL TYPE	WC (%)	qu (TSF)	LAYER DEPTH	SOIL DESCRIPTION AND REMARKS	PIEZO
												0.3	Asphalt.	
5	1	SS	4.5	6.5	9	9	10	15	SP					
					9									
10	2	SS	9.5	11.5	12	18	25	22	SP					
					20									
15	3	SS	15.0	17.0	9	19	30	15	SP				Medium Dense To Very Dense Gray Fine Sand	
					33									
20	4	SS	20.0	22.0	15	30	33	20	SP					
					28									
25	5	SS	25.0	27.0	11	17	17	21	SP					
					17									
30												29.8		
	6	SS	30.0	32.0	28	37	41	14	CL		>4.5			
					61									
	7	SS	32.0	33.8	25	62	90	16	CL		>4.5		Hard Gray Silty Clay. Trace Of Fine To Coarse Sand From 33.0 To 37.5 Feet.	
					70/3									
35	8	SS	34.0	36.0	40	53	80	22	CL		>4.5			
					73									
	9	SS	36.0	38.0	30	40	58	22	CL/SM		>4.5			
					49								6-in. Layer of Silty Sand At 37.5 Ft.	
	10	SS	38.0	40.0	12	20	33	23	CL		>4.5			
40					42									
	11	SS	40.0	42.0	13	23	40	24	CL		>4.5			
					48									

Rev. 8-88

Canonie

BORING LOG

PROJECT No. 87-126-01
BORING No. S-16
LOGGED BY M Obradovic
PAGE No. 2 of 2

PROJECT NAME WAUKEGAN HARBOR
BORING LOCATION N 5993.1966 E 5779.5492 SURFACE ELEVATION 585 54
DRILLER Fox Drilling, Inc. DATE: START 12/14/88 FINISH 12/14/88

DEPTH	SAMPLE No.	SAMPLE TYPE	SAMPLE INTERVAL FROM	SAMPLE INTERVAL TO	BLOW COUNT 0" 6"	BLOW COUNT 6" 12"	BLOW COUNT 12" 18"	REC (in)	USCS SOIL TYPE	WC (%)	qu (TSF)	LAYER DEPTH	SOIL DESCRIPTION AND REMARKS	PIEZO
												42.0	Same As Above	
													Bottom Of Boring At 42.0 Ft.	
													Notes:	
													1. Boring Was Advanced By Rotary Wash Method Using A 6-in. Dia. Bit.	
													2. Ground Water Was Encountered At 8.0 Ft. Below Ground Surface.	
													3. Upon Completion, Boring Was Backfilled With Cement / Bentonite Grout From 42.0 Ft To Ground Surface.	

Rev. 8-88

Canonie

BORING LOG

PROJECT No. 87-126-01
BORING No. S-17
LOGGED BY K Chirbas
PAGE No. 1 of 2

PROJECT NAME WAUKEGAN HARBOR
BORING LOCATION N 6080.9172 E 5654.3624 SURFACE ELEVATION 584.92
DRILLER Fox Drilling, Inc. DATE: START 12/28/88 FINISH 12/29/88

DEPTH	SAMPLE No	TYPE	INTERVAL FROM	INTERVAL TO	BLOW COUNT 0" 6"	BLOW COUNT 6" 12"	BLOW COUNT 12" 18"	REC (in)	USCS SOIL TYPE	WC (%)	qu (TSF)	LAYER DEPTH	SOIL DESCRIPTION AND REMARKS	PIEZO
												0.2	Asphalt.	
												1.0	(Brown Fine To Coarse Sand, Fine To Coarse Gravel)	
5	1	SS	4.5	6.5	6	9	15							
					20			21	SP					
10	2	SS	9.5	11.5	25	35	35							
					30			21	SP				Medium Dense To Very Dense Brown Fine Sand, Trace Of Coarse Sand From 9.5 To 15.0 Ft	
15	3	SS	15.0	17.0	13	15	23	22	SP					
					26									
20	4	SS	20.0	22.0	8	16	22	21	SP	23		20.0	Trace Of Silt From 20.0 To 25.0 Ft.	
					20								2-In. Layer Of Fine To Coarse Sand At 20.5 Ft.	
25	5	SS	25.0	27.0	15	20	27	22	SP					
					18								Dense Gray Fine Sand.	
30	6	SS	30.0	32.0	45	63	65	24	CL-ML	14	>4.5	29.5	Hard Gray Silty Clay.	
					69									
	7	PB	32.0	34.0				24	CL				Trace Of Fine To Coarse Gravel At 36.0 Ft.	
35	8	PB	34.0	36.0				24	CL			36.0		
	9	SS	36.0	38.0	82	32	39	24	CL			36.6	Hard Gray Silty Clay, Some Fine To Coarse Sand And Fine Gravel.	
					30						>4.5			
	10	SS	38.0	39.8	60	85	96	0					Hard Gray Silty Clay, Trace Of Fine Sand.	
40					90/4									
	11	SS	40.0	42.0	40	40	70	23	CL		>4.5			
					57									

Rev. 8-88

Canonie

BORING LOG

PROJECT No. 87-126-01
BORING No. S-17
LOGGED BY M. Obradovic
PAGE No. 2 of 2

PROJECT NAME WAUKEGAN HARBOR
BORING LOCATION N 6080.9172 E 5654.3624 SURFACE ELEVATION 584.92
DRILLER Fox Drilling, Inc. DATE: START 12/28/88 FINISH 12/29/88

DEPTH	SAMPLE No.	SAMPLE TYPE	SAMPLE INTERVAL FROM	SAMPLE INTERVAL TO	BLOW COUNT 0" 6"	BLOW COUNT 6" 12"	BLOW COUNT 12" 18"	REC (in)	USCS SOIL TYPE	WC (%)	qu (TSF)	LAYER DEPTH	SOIL DESCRIPTION AND REMARKS	PIEZO
												42.0	Hard Gray Silty Clay, Trace Of Fine Sand.	
45													Bottom Of Boring At 42.0 Ft.	

Notes:

1. Boring Was Advanced By Rotary Wash Method Using A 6-in. Dia. Roller Bit.
2. Ground Water Was Encountered At 4.0 Ft. Below Ground Surface.
3. Upon Completion, Boring was Backfilled With Cement / Bentonite Grout From 42.0 Ft. To Ground Surface.

Canonie

BORING LOG

PROJECT No. 87-126-01
BORING No. S-18
LOGGED BY S. Sharp
PAGE No. 1 of 2

PROJECT NAME WAUKEGAN HARBOR
BORING LOCATION N 6256.2624 E 5651.4454 SURFACE ELEVATION 584.31
DRILLER Fox Drilling, Inc. DATE: START 12/21/88 FINISH 12/27/88

DEPTH	SAMPLE No.	SAMPLE TYPE	INTERVAL FROM	INTERVAL TO	BLOW COUNT 0"-6"	BLOW COUNT 6"-12"	BLOW COUNT 12"-18"	REC (in)	USCS SOIL TYPE	WC (%)	qu (TSF)	LAYER DEPTH	SOIL DESCRIPTION AND REMARKS	PIEZO
5	1	SS	3.5	5.0	7	8	11	8	SP				Medium Dense To Dense Fine Sand Sample No. 1 Was Oily.	
10	2	SS	8.5	10.0	2	6	11	11	SW				Fine To Coarse Sand From 8.5 To 10.0 Ft Sample No. 2 Was Oily	
15	3	SS	13.5	15.0	11	16	20	10	SP					
20	4	SS	18.5	20.0	8	16	18	10	SP					
25	5	SS	23.5	25.0	10	17	18	14	SP				Gravel From 28.0 To 28.5 Ft	
												28.0		
30	6	SS	28.5	30.0	16	20	45	16	CL		>4.5			
	7	SS	30.5	32.5	17	22	55	30	CL		>4.5		Hard Gray Silty Clay, Trace of Fine to Coarse Sand From 28.5 To 42.5 Ft.	
					66									
	8	SS	32.5	33.5	42	100		12	CL		>4.5			
35	9	SS	34.5	36.3	30	75	100/3	7	CL		>4.5			
	10	SS	36.5	38.5	31	37	45	19	CL		>4.5			
					52									
40	11	SS	38.5	40.5	17	31	50	22	CL					
					54									

Rev. 8-88

Canonie

BORING LOG

PROJECT No. 87-126-01
BORING No. S-18
LOGGED BY S. Sharp
PAGE No. 2 of 2

PROJECT NAME WAUKEGAN HARBOR
BORING LOCATION N 6256.2624 E 5651.4454 SURFACE ELEVATION 584.31
DRILLER Fox Drilling, Inc. DATE: START 12/21/88 FINISH 12/27/88

DEPTH	SAMPLE No.	SAMPLE TYPE	INTERVAL FROM	INTERVAL TO	BLOW COUNT 0" to 6"	BLOW COUNT 6" to 12"	BLOW COUNT 12" to 18"	REC (in)	USCS SOIL TYPE	WC (%)	qu (TSF)	LAYER DEPTH	SOIL DESCRIPTION AND REMARKS	PIEZO
	12	SS	40.5	42.4	36	54	100/5	16	CL		>4.5		Trace Fine Gravel From 42.5 To 47.0 Ft	
	13	SS	42.5	44.5	17	27	42	17	CL		>4.5			
45					61									
	14	SS	44.5	45.9	48	79	100/5	0						
	15	SS	46.5	47.0	120			6	CL		>4.5			
												47.0		

Bottom of Boring at 47.0 Ft.

Notes:

1. Boring Was Advanced By Rotary Wash Method Using A 3-In. Dia Roller Bit.

2. Ground Water Was Encountered At 3.0 Ft. Below Ground Surface.

3. Upon Completion, Boring Was Backfilled With Cement/Bentonite Grout From 47.0 Ft. To Ground Surface.

Rev. 8-88

Canonie

BORING LOG

PROJECT No. 87-126-01
BORING No. S-19
LOGGED BY K Chirbas
PAGE No. 1 of 2

PROJECT NAME WAUKEGAN HARBOR
BORING LOCATION N 6294.9690 E 5819.4968 SURFACE ELEVATION 584.33
DRILLER Fox Drilling, Inc. DATE: START 12/15/88 FINISH 12/15/88

DEPTH	SAMPLE No	SAMPLE TYPE	INTERVAL FROM	INTERVAL TO	BLOW COUNT 0" to 6"	BLOW COUNT 6" to 12"	BLOW COUNT 12" to 18"	REC (in)	USCS SOIL TYPE	WC (%)	qu (TSF)	LAYER DEPTH	SOIL DESCRIPTION AND REMARKS	PIEZO
5	1	SS	4.5	6.5	7	7	9	21	SP					
					8									
10	2	SS	9.5	11.5	4	9	9	24	SP					
					20									
15	3	SS	15.0	17.0	9	9	10	15	SP				Medium Dense To Dense Gray Fine Sand.	
					13									
20	4	SS	20.0	22.0	14	22	22	20	SP					
					28									
25	5	SS	25.0	27.0	18	20	24	22	SP			25.0		
					25								Dense Light Gray Fine Sand	
30	6	SS	30.0	31.9	22	27	44	24	CL		>4.5	29.3		
					55/5								Hard Gray Silty Clay.	
	7	SS	32.0	33.4	50	59	109/5	13	CL		>4.5			
35	8	SS	34.0	34.4	120/5			5	CL		>4.5			
	9	SS	35.0	37.0	50	82	65	24	CL		>4.5		Some Fine To Coarse Sand From 34.0 To 34.5 Ft.	
					60									
	10	SS	37.0	38.8	22	40	93	21	CL		>4.5		Trace Of Fine To Coarse Sand From 34.5 To 39.0 Ft.	
					63/3									
40	11	SS	39.0	40.2	43	97	55/2	13	CL		>4.5		2-In. Clayey Silt Layer At 40.0 Ft.	

Rev. 8-88

Canonie

BORING LOG

PROJECT No. 87-126-01
BORING No. S-19
LOGGED BY K. Chirbas
PAGE No. 2 of 2

PROJECT NAME WAUKEGAN HARBOR
BORING LOCATION N 6294.9690 E 5819.4968 SURFACE ELEVATION 584.33
DRILLER Fox Drilling, Inc. DATE: START 12/15/88 FINISH 12/15/88

DEPTH	SAMPLE No.	SAMPLE TYPE	SAMPLE INTERVAL FROM	SAMPLE INTERVAL TO	BLOW COUNT 0" 6"	BLOW COUNT 6" 12"	BLOW COUNT 12" 18"	REC (in)	USCS SOIL TYPE	WC (%)	qu (TSF)	LAYER DEPTH	SOIL DESCRIPTION AND REMARKS	PIEZO
												40.2	Same As Above.	
													Bottom Of Boring At 40.2 Ft.	
													Notes:	
45													1. Boring Was Advanced By Rotary Wash Method Using A 3-In. Dia. Roller Bit.	
													2. Ground Water Was Encountered At 5.0 Ft. Below Ground Surface.	
													3. Upon Completion, Boring Was Backfilled With Cement / Bentonite Grout From 40.5 Ft. To Ground Surface.	

Rev. 8-88

Canonie

BORING LOG

PROJECT No. 87-126-01
BORING No. S-20
LOGGED BY K. Chirbas
PAGE No. 1 of 2

PROJECT NAME WAUKEGAN HARBOR
BORING LOCATION N 6298.2039 E 6005.3799 SURFACE ELEVATION 583.92
DRILLER Fox Drilling, Inc. DATE: START 1/10/89 FINISH 1/10/89

DEPTH	SAMPLE No	TYPE	INTERVAL FROM	INTERVAL TO	BLOW COUNT 0" 6"	BLOW COUNT 6" 12"	BLOW COUNT 12" 18"	REC (in)	USCS SOIL TYPE	WC (%)	qu (TSF)	LAYER DEPTH	SOIL DESCRIPTION AND REMARKS	PIEZO
												3.0	(Brown Fine Sand.)	
5	1	SS	4.5	6.5	10	8	7	15	SP				Medium Dense Black Fine Sand.	
					9									
10	2	SS	9.5	11.5	12	18	33	18	SP	22		9.5	Trace Of Medium Sand From 9.5 To 15.0 Ft.	
					38									
15	3	SS	15.0	17.0	14	26	30	20	SP				Dense to Very Dense Gray Fine Sand Two-Inch Layer Of Fine To Coarse Sand At 15.5 Ft.	
					31									
20	4	SS	20.0	22.0	13	15	22	21	SP					
					25									
25	5	SS	25.0	27.0	12	16	21	19	SP					
					24									
30	6	SS	30.0	32.0	16	33	40	20	CL		>4.5	29.0		
	7	PB	32.0	34.0	-	-	-	18	CL				Hard Gray Silty Clay, Trace to Some Fine to Coarse Sand.	
35	8	SS	34.0	35.9	16	52	69	21	CL-ML	9	>4.5			
					90/5									
	9	PB	36.0	38.0	-	-	-	16	CL					
	10	SS	38.0	40.0	35	30	47	20	CL		>4.5			
40					90								Bottom Of Boring At 40.0 Ft.	

Rev. 8-88

Canonie

BORING LOG

PROJECT No. 87-126-01
BORING No. S-20
LOGGED BY K. Chirbas
PAGE No. 2 of 2

PROJECT NAME WAUKEGAN HARBOR
BORING LOCATION N 6298.2039 E 6005.3799 SURFACE ELEVATION 583.92
DRILLER Fox Drilling, Inc. DATE: START 1/10/89 FINISH 1/10/89

DEPTH	SAMPLE No.	SAMPLE TYPE	SAMPLE INTERVAL FROM	SAMPLE INTERVAL TO	BLOW COUNT 0" to 6"	BLOW COUNT 6" to 12"	BLOW COUNT 12" to 18"	REC (in)	USCS SOIL TYPE	WC (%)	qu (TSF)	LAYER	DEPTH	SOIL DESCRIPTION AND REMARKS	PIEZO
														Notes: 1 Boring Was Advanced By Rotary Wash Method Using A 3-in. Dia Roller Bit. 2. Ground Water Was Encountered At 4.5 Ft. Below Ground Surface. 3. Upon Completion, Boring Was Backfilled With Cement / Bentonite Grout From 40.0 Ft. To Ground Surface.	

Rev. 8-88

Canonie

BORING LOG

PROJECT No. 87-126-01
BORING No. S-21
LOGGED BY M. Obradovic
PAGE No. 1 of 2

PROJECT NAME WAUKEGAN HARBOR
BORING LOCATION N 6291.4079 E 6208.2537 SURFACE ELEVATION 584 59
DRILLER Fox Drilling, Inc. DATE: START 12/9/88 FINISH 12/9/88

DEPTH	SAMPLE No	SAMPLE TYPE	INTERVAL FROM	INTERVAL TO	BLOW COUNT 0" 6"	BLOW COUNT 6" 12"	BLOW COUNT 12" 18"	REC (in)	USCS SOIL TYPE	WC (%)	qu (TSF)	LAYER DEPTH	SOIL DESCRIPTION AND REMARKS	PIEZO
5	1	SS	5.0	7.0	3	5	9	24	SP					
					6									
10	2	SS	10.0	12.0	9	18	24	24	SP				Medium Dense To Dense Black Fine Sand, Trace Of Coarse Gravel.	
					26									
15	3	SS	15.0	17.0	9	14	16	20	SP					
					27									
20	4	SS	20.0	22.0	9	13	12	18	SP			20.0	Medium Dense Gray Fine Sand. Trace Of Silt From 20.0 To 22.0 Ft.	
					13									
25	5	SS	25.0	27.0	10	13	16	18	SP				(Gravel Seam At 29.5 Ft.)	
					17									
30	6	SS	30.0	32.0	9	11	14	20	CL		>4.5	29.6		
					19									
	7	SS	32.0	34.0	23	29	41	24	CL		>4.5		Hard Gray Silty Clay. Trace Of Fine Sand From 34.0 To 38.0 Ft.	
					67									
35	8	SS	34.0	36.0	29	57	62	24	CL		>4.5		Trace Of Fine Gravel From 38.0 To 40.0 Ft.	
					87									
	9	SS	36.0	38.0	28	37	44	24	CL		>4.5			
					51									
	10	SS	38.0	40.0	23	24	42	20	CL		>4.5			
40					49							40.0		
													Bottom Of Boring At 40.0 Ft.	

Rev. 8-88

Canonie

BORING LOG

PROJECT No. 87-126-01
BORING No. S-21
LOGGED BY M. Obradovic
PAGE No. 2 of 2

PROJECT NAME WAUKEGAN HARBOR
BORING LOCATION N 6291.4079 E 6208.2537 SURFACE ELEVATION 584.59
DRILLER Fox Drilling, Inc. DATE: START 12/9/88 FINISH 12/9/88

DEPTH	SAMPLE No.	SAMPLE TYPE	SAMPLE INTERVAL FROM	SAMPLE INTERVAL TO	BLOW COUNT 0" - 6"	BLOW COUNT 6" - 12"	BLOW COUNT 12" - 18"	REC (in)	USCS SOIL TYPE	WC (%)	qu (TSF)	LAYER DEPTH	SOIL DESCRIPTION AND REMARKS	PIEZO
													Notes: 1. Boring Was Advanced By Rotary Wash Method Using 3-In. Dia. Roller Bit. 2. Ground Water Was Encountered At 5.0 Ft. Below Ground Surface. 3. Upon Completion, Boring Was Backfilled With Cement / Bentonite Grout From 40.0 Ft. To Ground Surface.	

Rev. 8-86

Canonie

BORING LOG

PROJECT No. 87-126-01
BORING No. S-22
LOGGED BY K. Chirbas
PAGE No. 1 of 2

PROJECT NAME WAUKEGAN HARBOR
BORING LOCATION N 6283.1055 E 6412.1465 SURFACE ELEVATION 583.57
DRILLER Fox Drilling, Inc. DATE: START 12/19/88 FINISH 12/20/88

DEPTH	SAMPLE No	SAMPLE TYPE	INTERVAL FROM	INTERVAL TO	BLOW COUNT 0" 6" 6"	BLOW COUNT 6" 12" 12"	BLOW COUNT 12" 18" 18"	REC (in)	USCS SOIL TYPE	WC (%)	qu (TSF)	LAYER DEPTH	SOIL DESCRIPTION AND REMARKS	PIEZO
5	1	SS	4.5	6.5	1	1	1	10	SP				Very Loose Gray Fine Sand 2-In. Layer Of Black Fine Sand At 6.3 Ft.	
					2									
10	2	SS	9.5	11.5	2	2	4	13	SP			9.5	Loose Black Fine Sand.	
					6									
15	3	SS	15.0	17.0	4	3	4	13	SP					
					6									
20	4	SS	20.0	22.0	9	9	8	15	SP			20.0	Medium Dense Gray Fine Sand.	
					8									
25	5	SS	25.0	27.0	7	5	5	12	SP			25.0	Loose Mottled Gray Fine Sand	
					5									
30	6	SS	30.0	32.0	64	21	30	15	CL		>4.5	29.8	Hard Mottled Gray Silty Clay, Trace Of Fine To Coarse Sand.	
					39									
	7	PB	32.0	34.0				24	CL					
35	8	PB	34.0	36.0				19	CL					
	9	SS	36.0	37.4	24	80	90/5	15	CL		>4.5			
	10	SS	38.0	40.0	20	25	43	20	CL		>4.5		Some Fine Sand From 40.0 To 40.5 Ft.	
40					57									
	11	SS	40.0	41.8	46	80	77	21	CL/SM		>4.5	40.5		
					74/4									

Rev. 8-88

Canonie

BORING LOG

PROJECT No. 87-126-01
BORING No. S-22
LOGGED BY K. Chirbas
PAGE No. 2 of 2

PROJECT NAME WAUKEGAN HARBOR
BORING LOCATION N 6283.1055 E 6412.1465 SURFACE ELEVATION 583.57
DRILLER Fox Drilling, Inc. DATE: START 12/19/88 FINISH 12/20/88

DEPTH	SAMPLE No.	SAMPLE TYPE	INTERVAL FROM	INTERVAL TO	BLOW COUNT 0" to 6"	BLOW COUNT 6" to 12"	BLOW COUNT 12" to 18"	REC (in)	USCS SOIL TYPE	WC (%)	qu (TSF)	LAYER DEPTH	SOIL DESCRIPTION AND REMARKS	PIEZO
												40.5		
													Very Dense Gray Silty Fine To Coarse Sand.	
	12	SS	42.0	43.8	11	77	92	22	SM			42.5		
					65/3				CL		>4.5	43.8	Hard Gray Silty Clay, Trace Of Fine Sand	
45													Bottom Of Boring At 43.8 FT.	
													Notes:	
													1. Boring Was Advanced By Rotary Wash Method Using A 6-in. Dia. Roller Bit.	
50													2. Ground Water Was Encountered At 4 0 Ft. Below Ground Surface.	
													3. Upon Completion, Boring Was Backfilled With With Cement / Bentonite Grout From 43.8 Ft. To Ground Surface.	

Rev. 8-88

Canonie

BORING LOG

PROJECT No. 87-126-01
BORING No. S-23
LOGGED BY K Chirbas
PAGE No. 1 of 2

PROJECT NAME WAUKEGAN HARBOR
BORING LOCATION N 6166.7375 E 6430.1768 SURFACE ELEVATION 583.35
DRILLER Fox Drilling, Inc. DATE: START 12/12/88 FINISH 12/12/88

DEPTH	SAMPLE No.	SAMPLE TYPE	INTERVAL FROM	INTERVAL TO	BLOW COUNT 0" 6"	BLOW COUNT 6" 12"	BLOW COUNT 12" 18"	REC (in)	USCS SOIL TYPE	WC (%)	qu (TSF)	LAYER DEPTH	SOIL DESCRIPTION AND REMARKS	PIEZO
												3.0	(Black Fine To Coarse Sand)	
5	1	SS	4.5	6.5	2	6	6	20	SP				Medium Dense Gray Fine Sand.	
					8									
10	2	SS	9.5	11.5	3	7	11	24	SP				3-In. Gray Fine To Coarse Sand Layer At 10 Ft.	
					13									
15	3	SS	15.0	17.0	15	16	20	23	SP	21		15.0	Trace Of Silt From 15.0 To 20.5 Ft	
					28									
20	4	SS	20.0	22.0	15	18	21	20	SP				Dense Brownish Gray Fine Sand.	
					27									
25	5	SS	25.0	27.0	15	15	18	22	SP					
					24									
30	6	SS	30.0	32.0	20	38	48	22	CL	11	>4.5	29.0		
					71									
	7	SS	32.0	34.0	28	42	58	19	CL		>4.5		Hard Gray Silty Clay, Trace Of Fine Sand From 32.0 To 40.0 Ft.	
					73									
35	8	SS	34.0	36.0	36	58	52	20	CL		>4.5			
					58									
	9	SS	36.0	38.0	51	43	40	19	CL		>4.5		Dark Gray From 34.0 to 35.0 Feet. Trace Of Fine Gravel From 38.0 To 40.0 Ft.	
					48									
	10	SS	38.0	40.0	15	19	21	16	CL		>4.5			
40					32							40.0		
													Bottom Of Boring At 40.0 Ft.	

Rev. 8-88

Canonie

BORING LOG

PROJECT No. 87-126-01
BORING No. S-23
LOGGED BY K. Chirbas
PAGE No. 2 of 2

PROJECT NAME WAUKEGAN HARBOR
BORING LOCATION N 6166.7375 E 6430.1768 SURFACE ELEVATION 583.35
DRILLER Fox Drilling, Inc. DATE: START 12/12/88 FINISH 12/12/88

DEPTH	SAMPLE No.	SAMPLE TYPE	SAMPLE INTERVAL FROM	SAMPLE INTERVAL TO	BLOW COUNT 0" to 6"	BLOW COUNT 6" to 12"	BLOW COUNT 12" to 18"	REC (in)	USCS SOIL TYPE	WC (%)	qu (TSF)	LAYER DEPTH	SOIL DESCRIPTION AND REMARKS	PIEZO
													Notes: 1. Boring Was Advanced By Rotary Wash Method Using A 3-in. Dia. Bit. 2. Ground Water Was Encountered At 4.0 Ft. Below Ground Surface. 3. Upon Completion, Boring Was Backfilled With Cement / Bentonite Grout From 40.0 Ft. To Ground Surface.	

Rev. 8-88

Canonie

BORING LOG

PROJECT No. 87-126-01
BORING No. S-24
LOGGED BY M Obradovic
PAGE No. 1 of 2

PROJECT NAME WAUKEGAN HARBOR
BORING LOCATION N 5998.3738 E 6363.8885 SURFACE ELEVATION 583.75
DRILLER Fox Drilling, Inc. DATE: START 12/12/88 FINISH 12/14/88

DEPTH	SAMPLE No.	SAMPLE TYPE	INTERVAL FROM	INTERVAL TO	BLOW COUNT 0" to 6"	BLOW COUNT 6" to 12"	BLOW COUNT 12" to 18"	REC (in)	USCS SOIL TYPE	WC (%)	qu (TSF)	LAYER DEPTH	SOIL DESCRIPTION AND REMARKS	PIEZO
													Dense Gray Fine Sand	
5	1	SS	3.0	4.5	12	21	25	14	SP					
												8.0		
	2	SS	8.0	9.5	2	4	6	18	SP				Loose Gray To Black Fine Sand. Trace Of Fine Gravel, Shells.	
10														
												13.5		
15	3	SS	13.5	15.0	11	15	19	18	SP				Dense Gray Fine Sand.	
												18.5		
20	4	SS	18.5	20.5	21	25	29	24	SM					
					20									
25	5	SS	23.5	25.5	13	12	16	20	SM				Medium Dense To Very Dense Gray Silty Fine Sand.	
					16									
30	6	SS	28.5	30.5	10	12	17	24	SM					
					20							30.7		
	7	SS	31.0	32.5	34	56	65	18	CL		>4.5		Hard Gray Silty Clay.	
	8	SS	32.5	34.0	32	63	81	18	CL		>4.5		Trace To Some Of Fine To Coarse Sand.	
35	9	SS	34.0	34.9	62	200/5		11	CL		>4.5		(Boulder From 35.0 To 37.0 Ft.)	
	10	SS	37.0	39.0	46	70	70	24	CL		>4.5			
					83									
40	11	SS	39.0	41.0	55	48	40	24	CL		>4.5			
					35								(6-in Boulder At 41.0 Ft.)	

Rev. 8-88

Canonie

BORING LOG

PROJECT No. 87-126-01
BORING No. S-2
LOGGED BY M Obrad...c
PAGE No. 2 of 2

PROJECT NAME WAUKEGAN HARBOR
BORING LOCATION N 5998.3738 E 6363.8885 SURFACE ELEVATION 583.75
DRILLER Fox Drilling, Inc. DATE: START 12/12/88 FINISH 12/14/88

DEPTH	SAMPLE No	SAMPLE TYPE	INTERVAL FROM	INTERVAL TO	BLOW COUNT 0" to 6"	BLOW COUNT 6" to 12"	BLOW COUNT 12" to 18"	REC (in)	USCS SOIL TYPE	WC (%)	qu (TSF)	LAYER DEPTH	SOIL DESCRIPTION AND REMARKS
	12	SS	41.5	43.5	21	40	63	24	CL		>4.5		
					75								(Boulder From 47.0 To 47.5 Ft.)
45	13	SS	43.5	45.5	20	38	49	24	CL		>4.5		
					65								
	14	SS	46.0	46.9	14	100/5		11	CL		>4.5		Some Fine To Coarse Sand, Fine To Coarse Gravel From 47.5 To 51.0 Ft
	15	SS	47.5	49.4	22	56	110	24	CL		>4.5		
50					100/5								
	16	SS	49.5	51.0	26	31	33	13	CL			51.0	
													Bottom Of Boring At 51.0 Ft.
55													Notes:
													1. Boring Was Advanced By Rotary Wash Method Using a 3-In. Dia Roller Bit
													2. Ground Water Was Encountered At 4.0 FT Below Ground Surface.
													3. Upon Completion, Boring Was Backfilled With Cement / Bentonite Grout From 51.0 Ft To Ground Surface.

Rev. 8-88

Canonie

BORING LOG

PROJECT No. 87-126-01
BORING No. S-25
LOGGED BY K Chirbas
PAGE No. 1 of 2

PROJECT NAME WAUKEGAN HARBOR
BORING LOCATION N 5998.5380 E 4563.4319 SURFACE ELEVATION 585.98
DRILLER Fox Drilling, Inc. DATE: START 12/21/88 FINISH 12/21/88

DEPTH	SAMPLE No	SAMPLE TYPE	INTERVAL FROM	INTERVAL TO	BLOW COUNT 0"	BLOW COUNT 6"	BLOW COUNT 12"	REC (In)	USCS SOIL TYPE	WC (%)	qu (TSF)	LAYER DEPTH	SOIL DESCRIPTION AND REMARKS	PIEZO
												2.0	(Brown Fine To Coarse Sand and Gravel)	
													(Black Fine To Coarse Sand And Fine To Coarse Gravel).	
5	1	SS	4.5	6.5	4	5	7					4.5		
					10			22	SP					
10	2	SS	9.5	11.5	14	24	24							
					28			21	SP					
15													Medium Dense To Dense Brown Fine Sand.	
	3	SS	15.0	17.0	12	20	25	15	SP	20			Trace Of Silt From 15.0 To 20.0 Ft	
					27									
20	4	SS	20.0	22.0	16	21	23	13	SP					
					25									
												23.5		
25	5	SS	24.0	25.8	17	23	50	20	CL	11	>4.5		Hard Mottled Brown Silty Clay, Trace Of Fine To Coarse Sand	
					75/4							25.8		
	6	PB	26.0	28.0				18	CL					
	7	PB	28.0	30.0				16	CL					
30														
	8	SS	30.0	31.3	55	78	81/4	14	CL		>4.5		Hard Gray Silty Clay, Trace Of Fine To Coarse Sand.	
	9	SS	32.0	32.9	130	100/5		10	CL					
	10	SS	33.0	33.9	58	100/5		10	CL					
35	11	SS	34.0	36.0	46	120	74	22	CL					
					45							36.0		
													Bottom Of Boring At 36.0 Ft.	
40														

Rev. 8-88

Canonie

BORING LOG

PROJECT No. 87-126-01
BORING No. S-25
LOGGED BY K. Chirbas
PAGE No. 2 of 2

PROJECT NAME WAUKEGAN HARBOR
BORING LOCATION N 5998.5380 E 4563.4319 SURFACE ELEVATION 585.98
DRILLER Fox Drilling, Inc. DATE: START 12/21/88 FINISH 12/21/88

DEPTH	SAMPLE No.	SAMPLE TYPE	SAMPLE INTERVAL FROM	SAMPLE INTERVAL TO	BLOW COUNT 0" to 6"	BLOW COUNT 6" to 12"	BLOW COUNT 12" to 18"	REC (in)	USCS SOIL TYPE	WC (%)	qu (TSF)	LAYER DEPTH	SOIL DESCRIPTION AND REMARKS	PIEZO
													Notes: 1. Boring Was Advanced By Rotary Wash Method Using A 6-in. Dia. Roller Bit. 2. Ground Water Was Encountered At 4.5 Ft. Below Ground Surface. 3. Upon Completion, Boring Was Backfilled With Cement / Bentonite Grout From 36.0 Ft. To Ground Surface.	

Rev. 8-88

Canonie

BORING LOG

PROJECT No. 87-126-01
BORING No. S-26
LOGGED BY K Chirbas
PAGE No. 1 of 2

PROJECT NAME WAUKEGAN HARBOR
BORING LOCATION N 5980.9238 E 4367.0778 SURFACE ELEVATION 585.05
DRILLER Fox Drilling, Inc. DATE: START 12/16/88 FINISH 12/16/88

DEPTH	SAMPLE No.	SAMPLE TYPE	INTERVAL FROM	INTERVAL TO	BLOW COUNT 0" to 6"	BLOW COUNT 6" to 12"	BLOW COUNT 12" to 18"	REC (in)	USCS SOIL TYPE	WC (%)	qu (TSF)	LAYER DEPTH	SOIL DESCRIPTION AND REMARKS	PIEZO
5	1	SS	4.5	6.5	3	3	3	6	SP				Loose To Medium Dense Gray Fine Sand.	
					6									
10	2	SS	9.5	11.5	7	14	22	12	SP					
					26									
15												15.0		
	3	SS	15.0	17.0	8	16	30	20	SP				Dense Brown Fine Sand.	
					54									
20	4	SS	20.0	22.0	12	20	18	21	SP					
					16							22.5		
25	5	SS	24.0	26.0	16	24	38	24	CL		>4.5			
					52									
	6	SS	26.0	27.3	22	73	85/4	15	CL		>4.5		Hard Gray Silty Clay.	
	7	SS	28.0	29.8	48	50	55	13	CL		>4.5		Trace Of Fine Sand From 24.0 To 26.0 Ft.	
30					50/4									
	8	SS	30.0	30.8	36	100/4		10	CL		>4.5		2 - 1-in. Silt Seams Between 29.0 and 29.5 Ft.	
	9	SS	31.5	33.5	45	42	38	22	CL		>4.5			
					40							33.5		
35													Bottom Of Boring At 33.5 Ft.	
40														

Rev. 8-88

Canonie

BORING LOG

PROJECT No. 87-126-01
BORING No. S-26
LOGGED BY K. Chirba
PAGE No. 2 of 2

PROJECT NAME WAUKEGAN HARBOR
BORING LOCATION N 5980.9238 E 4367.0778 SURFACE ELEVATION 585.05
DRILLER Fox Drilling, Inc. DATE: START 12/16/88 FINISH 12/16/88

DEPTH	SAMPLE No.	SAMPLE TYPE	SAMPLE INTERVAL FROM	SAMPLE INTERVAL TO	BLOW COUNT 0" to 6"	BLOW COUNT 6" to 12"	BLOW COUNT 12" to 18"	REC (in)	USCS SOIL TYPE	WC (%)	qu (TSF)	LAYER DEPTH	SOIL DESCRIPTION AND REMARKS	PIEZO
													Notes: 1. Boring Was Advanced By Rotary Wash Method Using A 6-in. Dia. Roller Bit. 2. Ground Water Was Encountered At 4.0 Ft. Below Ground Surface. 3. Upon Completion, Boring Was Backfilled With Cement / Bentonite Grout From 33.5 Ft. To Ground Surface.	

Rev. 8-88

Canonie

BORING LOG

PROJECT No. 87-126-01
BORING No. S-27
LOGGED BY P Romzick
PAGE No. 1 of 2

PROJECT NAME WAUKEGAN HARBOR
BORING LOCATION N 5975.4400 E 4197.1367 SURFACE ELEVATION 585.01
DRILLER Fox Drilling, Inc. DATE: START 1/4/89 FINISH 1/6/89

DEPTH	SAMPLE No.	TYPE	INTERVAL FROM	INTERVAL TO	BLOW COUNT 0" 6"	BLOW COUNT 6" 12"	BLOW COUNT 12" 18"	REC (in)	USCS SOIL TYPE	WC (%)	qu (TSF)	LAYER DEPTH	SOIL DESCRIPTION AND REMARKS	FIELD
												1.5	(Slag, Fill, And Gravel).	
5	1	SS	3.5	5.0	6	9	9	12	SP					
10	2	SS	8.5	10.0	1	2	5	11	SP				Loose To Dense Gray Fine Sand, Trace Of Medium To Coarse Sand Between 13.5 To 15 0 Ft	
15	3	SS	13.5	15.0	19	24	20	16	SP	23			(Gravel Seam At 22.5 Ft)	
20	4	SS	18.5	20.0	18	16	18	16	SP				(Boulder Between 23.0 To 25.0 Ft)	
25	5	SS	25.0	26.5	10	25	29	17	CL-ML	13	>4.5	25.0		
	6	SS	26.5	27.9	40	65	100/5	17	CL		>4.5		Hard Gray Silty Clay.	
30	7	SS	28.5	29.9	38	85	100/5	17	CL		>4.5		Trace Of Coarse Sand And Fine Gravel From 28.5 To 36.5 Ft.	
	8	SS	30.5	31.4	70	100/5		11	CL		>4.5			
	9	SS	32.5	33.3	95	100/3		9	CL					
35	10	SS	34.5	36.5	81	81	44	14	CL		>4.5			
					33							36.5	Bottom Of Bonng At 36.5 Ft.	
40														

Rev. 8-88

Canonie

BORING LOG

PROJECT No. 87-126-01
BORING No. S-27
LOGGED BY P Romzic
PAGE No. 2 of 2

PROJECT NAME WAUKEGAN HARBOR
BORING LOCATION N 5975.4400 E 4197.1367 SURFACE ELEVATION 585.01
DRILLER Fox Drilling, Inc. DATE: START 1/4/89 FINISH 1/6/89

DEPTH	SAMPLE No.	SAMPLE TYPE	SAMPLE INTERVAL FROM	SAMPLE INTERVAL TO	BLOW COUNT 0" to 6"	BLOW COUNT 6" to 12"	BLOW COUNT 12" to 18"	REC (in)	USCS SOIL TYPE	WC (%)	qu (TSF)	LAYER DEPTH	SOIL DESCRIPTION AND REMARKS	PIEZO
													Notes: 1. Boring Was Advanced By Rotary Wash Method Using A 3-In. Dia. Roller Bit. 2. Ground Water Was Encountered At 3.5 Ft. Below Ground Surface. 3. Upon Completion, Boring Was Backfilled With Cement / Bentonite Grout From 36.5 Ft. To Ground Surface.	

Rev. 6-88

BORING LOG

PROJECT No. 87-126-01
BORING No. S-28
LOGGED BY K. Chirbas
PAGE No. 1 of 2

PROJECT NAME WAUKEGAN HARBOR
BORING LOCATION N 6262.3883 E 4216.9643 SURFACE ELEVATION 584 46
DRILLER Fox Drilling, Inc. DATE: START 12/22/88 FINISH 12/22/88

DEPTH	SAMPLE No.	SAMPLE TYPE	INTERVAL FROM	INTERVAL TO	BLOW COUNT 0" 6" 12"	BLOW COUNT 6" 12" 18"	REC (in)	USCS SOIL TYPE	WC (%)	qu (TSF)	LAYER DEPTH	SOIL DESCRIPTION AND REMARKS	PIEZO
5	1	SS	4.5	6.5	3 4 6	6	22	SP					
10	2	SS	9.5	11.5	10 16 27	27	23	SP	20			Loose To Very Dense Brown Fine Sand,	
15	3	SS	15.0	17.0	20 30 35	40	20	SP				Trace Of Medium Sand And Silt From 15.0 To 20.0 Ft.	
20	4	SS	20.0	22.0	11 13 19	18	12	SP CL			21.5		
25	5	SS	23.0	25.0	15 25 36	41	24	CL	14	>4.5			
	6	PB	25.0	27.0			16	CL				Hard Gray Silty Clay.	
	7	PB	27.0	29.0			17	CL					
30	8	SS	29.0	30.2	41 75	144/2	13	CL		>4.5		Trace Of Fine Sand From 29.0 To 30.2 Ft.	
	9	SS	31.0	31.9	127	210/5	9	CL		>4.5		Some Fine To Coarse Sand, Fine Gravel From 31.0 To 31.9 Ft.	
	10	SS	32.5	33.3	80	185/4	6	ML			32.5		
35	11	SS	34.0	36.0	43 37	71	56	20	CL		>4.5	33.3 Hard Gray Clayey Silt, Fine To Coarse Sand.	
											36.0	Hard Gray Silty Clay, Trace Of Fine Sand.	
40												Bottom Of Boring At 36.0 Ft.	

Rev. 8-88

Canonie

BORING LOG

PROJECT No. 87-126-01
BORING No. S-28
LOGGED BY K. Chirbas
PAGE No. 2 of 2

PROJECT NAME WAUKEGAN HARBOR
BORING LOCATION N 6262.3883 E 4216.9643 SURFACE ELEVATION 584.46
DRILLER Fox Drilling, Inc. DATE: START 12/22/88 FINISH 12/22/88

DEPTH	SAMPLE No.	SAMPLE TYPE	INTERVAL FROM	INTERVAL TO	BLOW COUNT 0" to 6"	BLOW COUNT 6" to 12"	BLOW COUNT 12" to 18"	REC (in)	USCS SOIL TYPE	WC (%)	qu (TSF)	LAYER	DEPTH	SOIL DESCRIPTION AND REMARKS	PIEZO
														Notes: 1. Boring Was Advanced By Rotary Wash Method Using 6-in. Dia. Bit. 2. Ground Water Was Encountered At 3.0 Ft. Below Ground Surface. 3. Upon Completion, Boring was Backfilled With Cement / Bentonite Grout From 36.0 Ft. To Ground Surface.	

Rev. 8-88

Canonie

BORING LOG

PROJECT No. 87-126-01
BORING No. S-29
LOGGED BY M. Obradovic
PAGE No. 1 of 2

PROJECT NAME WAUKEGAN HARBOR
BORING LOCATION N 6263.8382 E 4456.5676 SURFACE ELEVATION 585.16
DRILLER Fox Drilling, Inc. DATE: START 12/8/88 FINISH 12/9/88

DEPTH	SAMPLE No	SAMPLE TYPE	INTERVAL FROM	INTERVAL TO	BLOW COUNT 0" 6"	BLOW COUNT 6" 12"	BLOW COUNT 12" 18"	REC (in)	USCS SOIL TYPE	WC (%)	qu (TSF)	LAYER DEPTH	SOIL DESCRIPTION AND REMARKS	PIEZO
5	1	SS	5.0	7.0	3	7	11	24	SP				Medium Dense Gray Fine Sand.	
					10									
10	2	SS	10.0	12.0	3	8	12	20	SP					
					20								Trace Of Coarse Gravel From 10.0 To 15.0 Ft	
15		SS	15.0	17.0	13	25	29	24	SM			15.0		
					41									
20	4	SS	20.0	22.0	15	20	20	24	SM				Dense To Very Dense Gray Silty Fine Sand.	
					22									
												24.0		
25	5	SS	24.0	26.0	50	32	28	0						
					42									
	6	SS	26.0	28.0	32	60	100	20	CL		>4.5		Hard Gray Silty Clay.	
					76									
	7	SS	28.0	29.5	15	50	125	16	CL		>4.5			
30														
	8	SS	29.5	30.8	55	112	100/3	15	CL		>4.5	31.0		
	9	SS	31.0	33.0	57	68	112	24	ML		>4.5	32.0	Hard Gray Clayey Silt.	
					58						>4.5		Hard Gray Silty Clay.	
	10	SS	33.0	35.0	9	23	48	24	CL		>4.5		Some Fine To Coarse Sand, Fine	
35					113							35.0	Gravel From 33.0 To 35.0 Ft.	
													Bottom Of Boring At 35.0 Ft.	

Rev. 8-88

Canonie

BORING LOG

PROJECT No. 87-126-01
BORING No. S-29
LOGGED BY M. Obrado
PAGE No. 2 of 2

PROJECT NAME WAUKEGAN HARBOR
BORING LOCATION N 6263.8382 E 4456.5676 SURFACE ELEVATION 585.16
DRILLER Fox Drilling, Inc. DATE: START 12/8/88 FINISH 12/9/88

DEPTH	SAMPLE No.	SAMPLE TYPE	SAMPLE INTERVAL FROM	SAMPLE INTERVAL TO	BLOW COUNT 0" 6"	BLOW COUNT 6" 12"	BLOW COUNT 12" 18"	REC (in)	USCS SOIL TYPE	WC (%)	qu (TSF)	LAYER DEPTH	SOIL DESCRIPTION AND REMARKS	PIEZO
													Notes: 1. Boring Was Advanced By Rotary Wash Method Using a 3-In. Dia Roller Bit. 2. Ground Water Was Encounterd At 5.0 Ft. Below Ground Surface. 3. Upon Completion, Boring was Backfilled With Cement / Bentonite Grout From 35.0 Ft. To Ground Surface.	

Rev. 8-88

Canonie

BORING LOG

PROJECT No. 87-126-01
BORING No. S-30
LOGGED BY K. Chirbas
PAGE No. 1 of 2

PROJECT NAME WAUKEGAN HARBOR
BORING LOCATION N 6267.8385 E 4651.1713 SURFACE ELEVATION 583.99
DRILLER Fox Drilling, Inc. DATE: STAR 1/9/89 FINISH 1/9/89

DEPTH	SAMPLE No.	TYPE	INTERVAL FROM	INTERVAL TO	BLOW COUNT 0" 6"	BLOW COUNT 6" 12"	BLOW COUNT 12" 18"	REC (in)	USCS SOIL TYPE	WC (%)	qu (TSF)	LAYER DEPTH	SOIL DESCRIPTION AND REMARKS	PIEZO
5	1	SS	4 5	6 5	4	5	5	19	SP				Loose To Very Dense Brown Fine Sand, Trace Of Coarse Sand Between 4 5 To 6.5 Ft.	
					10									
10	2	SS	9 5	11.5	15	30	30	17	SP					
					40									
15												15.0		
	3	SS	15.0	17.0	20	25	30	16	SP				Dense To Very Dense Gray Fine Sand	
					30									
20													Trace Of Silt From 20.0 To 22.0 Ft.	
	4	SS	20 0	22.0	20	25	23	18	SP	25				
					25							23.0		
25	5	SS	24.0	26.0	35	30	38	18	CL		>4.5		Hard Gray Silty Clay 2-1 In. Seams Of Silt At 24 5 and 25.0 Ft.	
					41							26.0		
	6	PB	26.0	28.0				14	SC		>4.5		Gray Fine Sand, Some Silty Clay, Some Fine Sand.	
	7	SS	28.0	29.8	50	64	80	18	ML	16	>4.5	28.0		
30					110/4							30.0	Hard Gray Clayey Silt.	
	8	SS	30.0	31.4	54	80	90/5	12	CL		>4.5		Hard Gray Silty Clay. 3-1/2 In. Seams Of Silt From 30.0 To 31.0 Ft.	
												32.0		
	9	PB	32.0	34.0				15	CL		>4.5		Gray Silty Clay, Some Fine Sand.	
												34.0		
35	10	SS	34.0	36.0	62	120	72	20	CL		>4.5		Hard Gray Silty Clay, Trace Fine To Coarse Sand From 34.0 To 38.0 Ft. 2 And 1 In. Seams Of Fine Sand At 34.0 and 35.5 Ft.	
					75									
	11	SS	36.0	38.0	15	30	35	12	CL		>4.5			
					38									
	12	SS	38.0	40.0	16	22	32	19	CL		>4.5			
40					35							40.0		
													Bottom Of Boring At 40.0 Ft.	

Rev. 8-88

Canonie

BORING LOG

PROJECT No. 87-126-01
BORING No. S-30
LOGGED BY K. Chirba
PAGE No. 2 of 2

PROJECT NAME WAUKEGAN HARBOR
BORING LOCATION N 6267.8385 E 4651.1713 SURFACE ELEVATION 583.99
DRILLER Fox Drilling, Inc. DATE: START 1/9/89 FINISH 1/9/89

DEPTH	SAMPLE No.	SAMPLE TYPE	INTERVAL FROM	INTERVAL TO	BLOW COUNT 0" to 6"	BLOW COUNT 6" to 12"	BLOW COUNT 12" to 18"	REC (in)	USCS SOIL TYPE	WC (%)	qu (TSF)	LAYER	DEPTH	SOIL DESCRIPTION AND REMARKS	PIEZO
														Notes: 1. Boring Was Advanced By Rotary Wash Method Using A 6-in. Dia. Roller Bit. 2. Ground Water Was Encountered At 3.5 Ft. Below Ground Surface. 3. Upon Completion, Boring Was Backfilled With Cement / Bentonite Grout From 40.0 Ft. To Ground Surface.	

Rev. 8-88

Canonie

DRAFT

BORING LOG

PROJECT No. 87-126-01
BORING No. S-31
LOGGED BY P Romzick
PAGE No. 1 of 2

PROJECT NAME WAUKEGAN HARBOR
BORING LOCATION
SURFACE ELEVATION 584.64
DRILLER Fox Drilling, Inc.
DATE: STAR 12/28/88 FINISH 12/30/88

DEPTH	SAMPLE No.	SAMPLE TYPE	INTERVAL FROM	INTERVAL TO	BLOW COUNT 0"	BLOW COUNT 6"	BLOW COUNT 12"	REC (in)	USCS SOIL TYPE	WC (%)	qu (TSF)	LAYER DEPTH	SOIL DESCRIPTION AND REMARKS	PIEZO
												1.5	Black Top Soil.	
5	1	SS	3.5	5.0	11	14	11	12	SP				Medium Dense Black Fine Sand. Samples No. 1 and No. 2 Had Slight Oily Appearance.	
												8.5		
10	2	SS	8.5	10.0	4	6	10	8	SP				Medium Dense To Dense Brown Fine Sand, Trace Of Fine Gravel Between 8.5 To 10.0 Ft.	
15	3	SS	13.5	15.0	12	14	17	6	SP					
												18.5		
20	4	SS	18.5	20.0	12	28	35	8	SP				Medium Dense To Very Dense Gray Fine Sand.	
25	5	SS	23.5	25.0	12	17	13	7	SP				(6 In. Gravel Layer At 26.0 Ft.)	
												26.5		
	6	SS	27.0	28.5	17	22	40	12	CL		>4.5			
30	7	SS	28.5	30.0	30	51	56	18	CL		>4.5			
	8	SS	30.5	32.5	6	5	4		CL		>4.5			
					33			6						
	9	SS	32.5	32.9	100/5			5	CL				Hard Gray Silty Clay.	
											>4.5			
35													Trace Of Fine To Coarse Sand Between	
	10	SS	34.5	35.3	64	100/3		8	CL		>4.5		28.5 And 38.5 Ft.	
	11	SS	36.5	38.5	81	90	81		CL		>4.5			
					85			24					1 In. Clayey Sand Seam At 37.0 Ft.	
40	12	SS	38.5	40.5	32	45	66	24	CL		>4.5			
					85									

Rev. 8-88

Canonie

DRAFT

BORING LOG

PROJECT No. 87-126-01
BORING No. S-31
LOGGED BY P Romzick
PAGE No. 2 of 2

PROJECT NAME WAUKEGAN HARBOR
BORING LOCATION
SURFACE ELEVATION 584.64
DRILLER Fox Drilling, Inc.
DATE: START 12/28/88 FINISH 12/30/88

DEPTH	SAMPLE No.	SAMPLE TYPE	INTERVAL FROM	INTERVAL TO	BLOW COUNT 0" to 6"	BLOW COUNT 6" to 12"	BLOW COUNT 12" to 18"	REC (in)	USCS SOIL TYPE	WC (%)	qu (TSF)	LAYER DEPTH	SOIL DESCRIPTION AND REMARKS	PIEZO
	13	SS	40.5	42.5	18	32	49	24	CL				Some Fine To Coarse Sand Between 40.5 To 44.5 Ft.	
					45									
	14	SS	42.5	44.5	23	40	68	24	CL					
45					87									
	15	SS	44.5	45.5	32	100		12	CL			45.5		
													Bottom Of Boring At 45.5 Ft	
													Notes:	
50													1. Boring Was Advanced By Rotary Wash Method Using a 3-In. Dia Roller Bit.	
													2. Ground Water Was Encounterd At 3 5 Ft Below Ground Surface.	
													3. Upon Completion, Boring Was Backfilled With Cement / Bentonite Grout From 45 5 Ft. To Ground Surface.	

Rev. 8-88

Canonie

BORING LOG

PROJECT No. 87-126-01
BORING No. S-32
LOGGED BY P Romzick
PAGE No. 1 of 2

PROJECT NAME WAUKEGAN HARBOR
BORING LOCATION N 6152.6719 E 4177.7159 SURFACE ELEVATION 585.15
DRILLER Fox Drilling, Inc. DATE: START 1/10/89 FINISH 1/11/89

DEPTH	SAMPLE No.	TYPE	INTERVAL FROM	INTERVAL TO	BLOW COUNT 0" to 6"	BLOW COUNT 6" to 12"	BLOW COUNT 12" to 18"	REC (in)	USCS SOIL TYPE	WC (%)	qu (TSF)	LAYER DEPTH	SOIL DESCRIPTION AND REMARKS	PIEZO
5	1	SS	3.5	5.0	6	9	9	15	SP				Medium Dense Grayish Brown Fine Sand.	
												8.5		
10	2	SS	8.5	10.0	4	11	14	15	SP				Medium Dense To Very Dense Brown Fine Sand, Trace Of Fine Gravel From 8.5 To 10.0 Ft.	
15	3	SS	13.5	15.0	13	23	30	16	SP				Trace Of Silt From 13.5 To 15.0 Ft.	
20	4	SS	18.5	20.0	27	42	35	12	SP					
												21.5		
	5	SS	22.0	24.0	18	44	58	22	CL		>4.5		Hard Gray Silty Clay.	
					82									
25	6	SS	24.0	25.5	27	41	50	15	CL		>4.5		Trace of Fine To Coarse Sand From 22.0 Ft. To 27.0 Ft.	
	7	SS	25.5	27.0	38	51	60	16	CL		>4.5		Some Fine Gravel From 27.5 To 29.5 Ft.	
	8	SS	27.5	29.0	28	49	77	18	CL		>4.5			
30	9	SS	29.0	30.5	38	66	92	18	CL		>4.5			
	10	SS	30.5	31.5	89	130		12	CL		>4.5			
	11	SS	32.5	32.9	100/5			5	CL		>4.5			
35														
	12	SS	34.5	36.5	33	30	53	24	CL		>4.5			
					71									
	13	SS	36.5	38.5	16	28	44	24	CL		>4.5			
					58									
40	14	SS	38.5	40.5	14	24	34	24	CL		>4.5			
					48							40.5		
													Bottom Of Bonng At 40.5 Ft.	

Rev. 8-88

Canonie

BORING LOG

PROJECT No. 87-126-01
BORING No. S-32
LOGGED BY P. Romzick
PAGE No. 2 of 2

PROJECT NAME WAUKEGAN HARBOR
BORING LOCATION N 6152.6719 E 4177.7159 SURFACE ELEVATION 585.15
DRILLER Fox Drilling, Inc. DATE: START 1/10/89 FINISH 1/11/89

DEPTH	SAMPLE No.	SAMPLE TYPE	SAMPLE INTERVAL FROM	SAMPLE INTERVAL TO	BLOW COUNT 0" to 6"	BLOW COUNT 6" to 12"	BLOW COUNT 12" to 18"	REC (in)	USCS SOIL TYPE	WC (%)	qu (TSF)	LAYER DEPTH	SOIL DESCRIPTION AND REMARKS	PIEZO
													Notes: 1. Boring Was Advanced By Rotary Wash Method Using A 3-In Dia. Roller Bit 2. Ground Water Was Encountered At 2.5 Ft Below Ground Surface. 3. Upon Completion, Boring Was Backfilled With Cement / Bentonite Grout From 40.5 Ft. To Ground Surface.	

Rev. 8-88

Canonie

BORING LOG

PROJECT No. 87-126-01
BORING No. S-33
LOGGED BY M. Obradovic
PAGE No. 1 of 1

PROJECT NAME WAUKEGAN HARBOR
BORING LOCATION N 6336.8530 E 4213.0753 SURFACE ELEVATION 588.03
DRILLER Fox Drilling, Inc. DATE: START 12/8/88 FINISH 12/8/88

DEPTH	SAMPLE No.	SAMPLE TYPE	INTERVAL FROM	INTERVAL TO	BLOW COUNT 0" to 6"	BLOW COUNT 6" to 12"	BLOW COUNT 12" to 18"	REC (in)	USCS SOIL TYPE	WC (%)	qu (TSF)	LAYER DEPTH	SOIL DESCRIPTION AND REMARKS	PIEZO
	1	SS	0.0	2.0	6	4	5	22	SP					
					6									
	2	SS	2.0	4.0	2	3	2	20	SP				Loose Light To Dark Brown Fine Sand	
					3									
	3	SS	4.0	6.0	2	3	3	6	SP					
					2							6.0		
	4	SS	6.0	8.0	1	1	2	12	SP				Loose Light Brown Fine Sand, Trace Of Medium	
					2							8.0	To Coarse Sand. 1 in. Clay Seam At 7 0 Ft	
	5	SS	8.0	10.0	0	0	0	24	SP				Very Loose Brown Silty Fine Sand, Trace Of	
					0							10.0	Coarse Sand.	
													Bottom Of Boring At 10.0 Ft.	
													Notes:	
													1. Boring Was Advanced Using 8-in O D Hollow Stem Auger.	
													2. Ground Water Was Encountered At 6.0 Ft Below Ground Surface.	
													3. Upon Completion, Boring Was Backfilled With Cement / Bentonite Grout From 10.0 Ft To Ground Surface.	

Rev. 8-88

Canonie

BORING LOG

PROJECT No. 87-126-01
BORING No. S-34
LOGGED BY M Obradovic
PAGE No. 1 of 1

PROJECT NAME WAUKEGAN HARBOR
BORING LOCATION N 6328.1365 E 4449.9523 SURFACE ELEVATION 585.79
DRILLER Fox Drilling, Inc. DATE: START 12/8/88 FINISH 12/8/88

DEPTH	SAMPLE No	SAMPLE TYPE	INTERVAL FROM	INTERVAL TO	BLOW COUNT 0" to 6"	BLOW COUNT 6" to 12"	BLOW COUNT 12" to 18"	REC (in)	USCS SOIL TYPE	WC (%)	qu (TSF)	LAYER DEPTH	SOIL DESCRIPTION AND REMARKS	PIEZO
	1	SS	0.0	2.0	2	4	6	12	SP				Loose Light Brown Fine Sand, Trace Of Fine Gravel.	
					7							2.0		
	2	SS	2.0	4.0	2	7	7	12	SP				Medium Dense Light Brown Fine Sand, Gravel	
					7							4.0		
	3	SS	4.0	6.0	1	1	1	18	SP					
					1								Very Loose Light To Dark Brown Fine Sand	
	4	SS	6.0	8.0	0	0	0	12	SP					
					1							8.0		
	5	SS	8.0	10.0	0	1	2	24	SP				Very Loose Light Brown Fine Sand	
					4							10.0		
													Bottom Of Boring At 10.0 Ft.	

Notes:

1. Boring Was Advanced Using 8-in O.D Hollow Stem Auger.

2. Ground Water Was Encountered At 4 0 Ft Below Ground Surface.

3. Upon Completion, Boring Was Backfilled With Cement / Bentonite Grout From 10.0 Ft. To Ground Surface.

Rev. 8-88

Canonie

BORING LOG

PROJECT No. 87-126-01
BORING No. S-35
LOGGED BY M Obradovic
PAGE No. 1 of 1

PROJECT NAME WAUKEGAN HARBOR
BORING LOCATION N 6327.4066 E 4629.6416 SURFACE ELEVATION 585.58
DRILLER Fox Drilling, Inc. DATE: START 12/8/88 FINISH 12/8/88

DEPTH	SAMPLE No	SAMPLE TYPE	INTERVAL FROM	INTERVAL TO	BLOW COUNT 0" 6"	BLOW COUNT 6" 12"	BLOW COUNT 12" 18"	REC (in)	USCS SOIL TYPE	WC (%)	qu (TSF)	LAYER DEPTH	SOIL DESCRIPTION AND REMARKS	PIEZO
	1	SS	0.0	2.0	5	7	8	12	SP				Medium Dense Light Brown Fine Sand, Trace Of Coarse Gravel. Organics	
					9							2.0		
	2	SS	2.0	4.0	7	6	7	20	SP					
					8								Medium Dense Light Brown Fine Sand, Trace Of Silt And Coarse Sand From 2 0 To 4 0 Ft	
5	3	SS	4 0	6.0	5	5	6	20	SP					
					6							6.0		
	4	SS	6.0	8.0	1	1	2	20	SM					
					2								Very Loose Black Silty Fine Sand.	
	5	SS	8.0	10.0	0	0	0	8	SM					
10					1							10.0		
													Bottom Of Boring At 10.0 Ft.	
													Notes:	
15													1 Boring Was Advanced Using 8-in O D Hollow Stem Auger.	
													2. Ground Water Was Encountered At 4 0 FT Below Ground Surface.	
													3. Upon Completion, Boring Was Backfilled With Cement / Bentonite Grout From 10 0 FT To Ground Surface.	

Rev. 8-88

Canonie

BORING LOG

PROJECT No. 88-205
BORING No. S-36
LOGGED BY P Romzick
PAGE No. 1 of 1

PROJECT NAME WAUKEGAN HARBOR
BORING LOCATION N 4398.2009 E 5118.5641 SURFACE ELEVATION 584.59
DRILLER Fox Drilling, Inc. DATE: START 2/2/89 FINISH 2/2/89

DEPTH	SAMPLE No.	SAMPLE TYPE	INTERVAL FROM	INTERVAL TO	BLOW COUNT 0" 6"	BLOW COUNT 6" 12"	BLOW COUNT 12" 18"	REC (in)	USCS SOIL TYPE	WC (%)	qu (TSF)	LAYER DEPTH	SOIL DESCRIPTION AND REMARKS	PIEZO
	1	SS	0.0	1.5	14	23	14	16	SP			3.0	Dense Black Fine Sand, Trace Of Coarse Sand.	
5	2	SS	3.0	4.5	9	13	15	14	SP			8.0	Medium Dense Brown Fine Sand	
10	3	SS	8.0	9.5	6	15	22	15	SP			9.5	Dense Dark Gray Fine Sand.	
15													Bottom Of Boring At 9.5 Ft.	

Notes:

1. Boring Was Advanced Using 4-In Dia O.D. Flight Augers.

2. Ground Water Was Encountered At 4 0 Ft. Below Ground Surface.

3. Upon Completion, Boring Was Backfilled With Cement / Bentonite Grout From 9 5 Ft. To Ground Surface.

Rev. 8-88

Canonie

BORING LOG

PROJECT No. 88-205
BORING No. S-37
LOGGED BY P Romzick
PAGE No. 1 of 1

PROJECT NAME WAUKEGAN HARBOR
BORING LOCATION N 4506.8327 E 5115.6294 SURFACE ELEVATION 584 53
DRILLER Fox Drilling, Inc. DATE: START 2/2/89 FINISH 2/2/89

DEPTH	SAMPLE No.	SAMPLE TYPE	SAMPLE INTERVAL FROM	SAMPLE INTERVAL TO	BLOW COUNT 0" to 6"	BLOW COUNT 6" to 12"	BLOW COUNT 12" to 18"	REC (in)	USCS SOIL TYPE	WC (%)	qu (TSF)	LAYER DEPTH	SOIL DESCRIPTION AND REMARKS	PIEZO
	1	SS	0.0	1.5	25	13	12	12	SP				Loose To Medium Dense Black Fine Sand, Some Coarse Gravel, Fill And Cinders	
5	2	SS	3.0	4.5	4	3	4	14	SP				Odor And Oily Appearance In Sample #3.	
	3	SS	7 0	8.5	14	13	5	18	SP					
10	4	SS	10.0	11.5	5	14	16	16	SP			10.0	Medium Dense Gray Fine Sand.	
												11.5	Bottom Of Boring At 11.5 Ft.	
15													Notes:	
													1. Boring Was Advanced Using 4-In O.D Flight Augers.	
													2. Ground Water Was Encountered At 4 0 Ft. Below Ground Surface.	
													3. Upon Completion, Boring Was Backfilled With Cement / Bentonite Grout From 11 5 Ft To Ground Surface.	

Rev. 8-88

Canonie

BORING LOG

PROJECT No. 88-205
BORING No. S-38
LOGGED BY P Romzick
PAGE No. 1 of 1

PROJECT NAME WAUKEGAN HARBOR
BORING LOCATION N 4382.8321 E 5241.6323 SURFACE ELEVATION 584.64
DRILLER Fox Drilling, Inc. DATE: START 2/2/89 FINISH 2/2/89

DEPTH	SAMPLE No.	SAMPLE TYPE	INTERVAL FROM	INTERVAL TO	BLOW COUNT 0" to 6"	BLOW COUNT 6" to 12"	BLOW COUNT 12" to 18"	REC (in)	USCS SOIL TYPE	WC (%)	qu (TSF)	LAYER DEPTH	SOIL DESCRIPTION AND REMARKS	PIEZO
	1	SS	0.0	1.5	2	7	7	14	SP				Medium Dense Brown Fine Sand Some 1-In Coke Particles From 0.0 To 1.5 Ft	
5	2	SS	3.0	4.5	6	8	9	15	SP			4.2		
	3	SS	6.0	7.5	6	11	14	18	SP				Medium Dense Dark Gray Fine Sand Slight Odor In Sample # 3.	
10	4	SS	10.0	11.5	2	3	10	18	SP			11.5		
													Bottom Of Boring At 11.5 Ft.	
15													Notes:	
													1. Boring Was Advanced Using 4-In O D Flight Augers.	
													2. Ground Water Was Encountered At 4.0 Ft Below Ground Surface.	
													3. Upon Completion, Boring Was Backfilled With Cement / Bentonite Grout From 11.5 Ft. To Ground Surface.	

Rev. 8-88

Canonie

BORING LOG

PROJECT No. 88-205
BORING No. S-39
LOGGED BY P Romzick
PAGE No. 1 of 1

PROJECT NAME WAUKEGAN HARBOR
BORING LOCATION N 4594.1010 E 5186.5400 SURFACE ELEVATION 584 64
DRILLER Fox Drilling, Inc. DATE: START 2/2/89 FINISH 2/2/89

DEPTH	SAMPLE No.	TYPE	INTERVAL FROM	INTERVAL TO	BLOW COUNT 0" 6" 6" 12"	BLOW COUNT 6" 12" 12" 18"	REC (in)	USCS SOIL TYPE	WC (%)	qu (TSF)	LAYER DEPTH	SOIL DESCRIPTION AND REMARKS	PIEZO
	1	SS	0.0	1.5	8	9 15	10	SP				Medium Dense Black Fine Sand. Some 1-In Coke Particles.	
											3.0		
	2	SS	3.0	4.5	7	6 9	14	SP				Medium Dense Brown Fine Sand. Odor In Sample #2.	
	3	SS	6.0	7 5	6	10 18	18	SP					
											7.5		

Bottom Of Boring At 7.5 Ft.

Notes:

1. Boring Was Advanced Using 4-In Dia O D Flight Augers.

2. Ground Water Was Encountered At 4 0 Ft. Below Ground Surface.

3. Upon Completion, Boring Was Backfilled With Cement / Bentonite Grout From 7.5 Ft To Ground Surface.

Rev. 8-88

Canonie

BORING LOG

PROJECT No. 88-205
BORING No. S-40
LOGGED BY P Romzick
PAGE No. 1 of 1

PROJECT NAME WAUKEGAN HARBOR
BORING LOCATION N 4582.9879 E 5280.7998 SURFACE ELEVATION 584 80
DRILLER Fox Drilling, Inc. DATE: START 2/2/89 FINISH 2/2/89

DEPTH	SAMPLE No.	SAMPLE TYPE	INTERVAL FROM	INTERVAL TO	BLOW COUNT 0" 6"	BLOW COUNT 6" 12"	BLOW COUNT 12" 18"	REC (in)	USCS SOIL TYPE	WC (%)	qu (TSF)	LAYER DEPTH	SOIL DESCRIPTION AND REMARKS	PIEZO
	1	SS	0.0	1.5	8	10	12	15	SP				Medium Dense Black Fine Sand. Slight Odor In Sample #1.	
												3.0		
5	2	SS	3 0	4 5	11	15	16	17	SP				Dense Brown Fine Sand	
	3	SS	6.0	7 5	4	7	10	16	SP			7 0		
10													Medium Dense Gray Fine Sand. Odor In Sample No. 3.	
	4	SS	10.0	11 5	4	6	10	18	SP					
												11.5	Bottom Of Boring AT 11 5 Ft	
15													Notes:	
													1 Boring Was Advanced Using 4-In O.D Flight Augers.	
													2. Ground Water Was Encountered At 4 0 Ft. Below Ground Surface.	
													3. Upon Completion, Boring Was Backfilled With Cement / Bentonite Grout From 11 5 Ft. To Ground Surface	

Rev. 8-88

Canonie

BORING LOG

PROJECT No. 88-205
BORING No. S-41
LOGGED BY P Romzick
PAGE No. 1 of 2

PROJECT NAME WAUKEGAN HARBOR
BORING LOCATION N 4481.0808, E 5222.8186 SURFACE ELEVATION 584 41
DRILLER Fox Drilling, Inc. DATE: START 2/2/89 FINISH 2/3/89

DEPTH	SAMPLE No.	TYPE	INTERVAL FROM	INTERVAL TO	BLOW COUNT 0" 6" 12" / 6" 12" 18"	REC (in)	USCS SOIL TYPE	WC (%)	qu (TSF)	LAYER DEPTH	SOIL DESCRIPTION AND REMARKS	PIEZO
	1	SS	0.0	1.5	18 13 12	17	SP					
											Loose To Medium Dense Black And Brown Fine Sand. Odor And Oily Appearance In Samples #2 And #3.	
5	2	SS	3.0	4.5	8 10 12	16	SP					
	3	SS	6.0	7.5	5 5 4	18	SP				Interbedded Black And Brown 3/8-In Seams Of Sand From 7.0 Ft. To 7.5 Ft.	
10										10.0		
	4	SS	10.0	11.5	4 8 13	18	SP				Medium Dense Brown To Dark Brown Fine Sand. Odor And Oily Appearance In Sample #4	
										13.5		
15	5	SS	13.5	15.0	5 14 27	18	SP				Dense Mixture Of Mottled Fine Sand. Odor And Oily Appearance In Sample #5	
										18.5		
20	6	SS	18.5	20.0	4 10 17	18	SP				Medium Dense To Dense Dark Gray And Black Fine Sand. Odor In Sample # 6	
25	7	SS	23.5	25.0	9 15 20	18	SP					
										29.0	Odor And Oily Appearance In Sand Of Sample #8.	
30	8	SS	28.5	30.0	10 37 49	18	SP/CL			30.0	Gray Clay.	
											Bottom Of Boring At 30.0 Ft.	
35												
40												

Rev. 8-88

Canonie

BORING LOG

PROJECT No. 88-20E
BORING No. S-41
LOGGED BY P Romzick
PAGE No. 2 of 2

PROJECT NAME WAUKEGAN HARBOR
BORING LOCATION N 4481.0808, E 5222.8186 SURFACE ELEVATION 584.41
DRILLER Fox Drilling, Inc. DATE: START 2/2/89 FINISH 2/3/89

DEPTH	SAMPLE No.	SAMPLE TYPE	SAMPLE INTERVAL FROM	SAMPLE INTERVAL TO	BLOW COUNT 0" 6"	BLOW COUNT 6" 12"	BLOW COUNT 12" 18"	REC (in)	USCS SOIL TYPE	WC (%)	qu (TSF)	LAYER	DEPTH	SOIL DESCRIPTION AND REMARKS	FIELD
														Notes: 1 Boring Was Advanced By Rotary Wash Method Using A 3-In. Dia. Roller Bit. 2. Ground Water Was Encountered At 4.0 Ft. Below Ground Surface. 3. Upon Completion, Boring Was Backfilled With Cement / Bentonite Grout From 30.0 FT. To Ground Surface.	

Rev. 8-88

BORING LOG

PROJECT No. 87-126-04
BORING No. S-42
LOGGED BY SEM
PAGE No. 1 of 1

PROJECT NAME WAUKEGAN HARBOR
BORING LOCATION N 4531.98 E 5179.29 SURFACE ELEVATION 583.96
DRILLER Fox Drilling, Inc. DATE: START 8/1/89 FINISH 8/1/89

DEPTH	SAMPLE No.	SAMPLE TYPE	INTERVAL FROM	INTERVAL TO	BLOW COUNT 0" - 6"	BLOW COUNT 6" - 12"	BLOW COUNT 12" - 18"	REC (in)	USCS SOIL TYPE	WC (%)	qu (TSF)	LAYER DEPTH	SOIL DESCRIPTION AND REMARKS	PIEZO
5	1	SS	5.0	7.0	17	18	19	24	SW				Dense Brown To Gray Fine To Coarse Sand.	
					22									
10														
15	2	SS	15.0	17.0	25	34	33	16	SW				Very Dense Gray Fine To Medium Sand.	
					39									
20												20.0		
25	3	SS	24.0	26.0	13	13	9	20	SM				Medium Dense Gray Fine Sand, Some Silt, Slight Odor. Gray Clay At 25.7 Ft.	
					17							26.0		
30													Bottom Of Boring At 26.0 Ft.	

Notes:

1. Boring Was Advanced By Mud Rotary Drilling Using A 6-In. Diameter Tricone Roller Bit.
2. Ground Water Was Encountered At 3.0 Ft. Below Ground Surface During Drilling.
3. Upon Completion, Boring Was Backfilled With Cement/Bentonite Grout From 26.0 Ft. To Ground Surface.

Rev. 8-88

BORING LOG

PROJECT No. 87-126-04
BORING No. S-43
LOGGED BY SEM
PAGE No. 1 of 1

PROJECT NAME WAUKEGAN HARBOR
BORING LOCATION N 4522.12 E 5241.81 SURFACE ELEVATION 584 49
DRILLER Fox Drilling, Inc. DATE: START 7/31/89 FINISH 7/31/89

DEPTH	SAMPLE No.	SAMPLE TYPE	INTERVAL FROM	INTERVAL TO	BLOW COUNT 0" to 6"	BLOW COUNT 6" to 12"	BLOW COUNT 12" to 18"	REC (in)	USCS SOIL TYPE	WC (%)	qu (TSF)	LAYER DEPTH	SOIL DESCRIPTION AND REMARKS	PIEZO
5	1	SS	5.0	7.0	5 13	10	10	24	SW				Medium Dense Brown To Gray Fine To Coarse Sand.	
10														
15	2	SS	15.0	17.0	13 19	15	18	24	SW				Dense Dark Gray Fine To Medium Sand, Trace Of Silt, Moderate Odor.	
20												20.0		
25	3	SS	24.0	26.0	13	15	50/6	18	SM				Very Dense Dark Gray Fine Sand, Some Silt, Moderate Odor. Gravel From 25.5 To 26.5 Ft.	
												27.0		
	4	SS	27.0	29.0	50 40	23	34	12	CL				Hard Gray Sandy Clay.	
30												29.0	Bottom Of Boring At 29.0 Ft.	

Notes:

1. Boring Was Advanced By Mud Rotary Drilling Using A 6-In. Diameter Tricone Roller Bit.
2. Ground Water Was Encountered At 3.0 Ft. Below Ground Surface During Drilling.
3. Upon Completion, Boring Was Backfilled With Cement/Bentonite Grout From 29.0 Ft. To Ground Surface.

Rev. 8-88

BORING LOG

PROJECT No. 87-126-04
BORING No. S-44
LOGGED BY SEM
PAGE No. 1 of 1

PROJECT NAME WAUKEGAN HARBOR
BORING LOCATION N 4518.54 E 5300.01 SURFACE ELEVATION 584.63
DRILLER Fox Drilling, Inc. DATE: START 8/1/89 FINISH 8/1/89

DEPTH	SAMPLE No	SAMPLE TYPE	INTERVAL FROM	INTERVAL TO	BLOW COUNT 0" to 6"	BLOW COUNT 6" to 12"	BLOW COUNT 12" to 18"	REC (in)	USCS SOIL TYPE	WC (%)	qu (TSF)	LAYER DEPTH	SOIL DESCRIPTION AND REMARKS	PIEZO
5	1	SS	5.0	7.0	7	10	12	24	SW				Medium Dense Brown Fine To Coarse Sand.	
					14									
10														
15	2	SS	15.0	17.0	13	20	23	18	SW				Dense Dark Gray Fine To Coarse Sand.	
					25									
20												20.0		
25	3	SS	24.0	25.5	13	18	100/5	12	SM				Very Dense Dark Gray Fine To Medium Sand, Some Silt. Gravel From 25.5 Ft. To 26.0 Ft.	
												26.0		
	4	SS	26.0	28.0	21	25	23	12	CL				Hard Gray Clay.	
					26							28.0		
30													Bottom Of Boring At 28.0 Ft.	

Notes:

1. Boring Was Advanced By Mud Rotary Drilling Using A 6-In. Diameter Tricone Roller Bit.
2. Ground Water Was Encountered At 3.0 Ft. Below Ground Surface During Drilling.
3. Upon Completion, Boring Was Backfilled With Cement/Bentonite Grout From 28.0 Ft. To Ground Surface.

Rev. 8-88

BORING LOG

PROJECT No. 87-126-04
BORING No. S-45
LOGGED BY SEM
PAGE No. 1 of 1

PROJECT NAME WAUKEGAN HARBOR
BORING LOCATION N 4466.17 E 5269.26 SURFACE ELEVATION 585.12
DRILLER Fox Drilling, Inc. DATE: START 8/3/89 FINISH 8/3/89

DEPTH	SAMPLE No.	SAMPLE TYPE	INTERVAL FROM	INTERVAL TO	BLOW COUNT 0"	BLOW COUNT 6"	BLOW COUNT 12"	REC (in)	USCS SOIL TYPE	WC (%)	qu (TSF)	LAYER DEPTH	SOIL DESCRIPTION AND REMARKS	PIEZO
5	1	SS	5.0	7.0	6	11	12	18	SW				Medium Dense Brown To Gray Fine To Coarse Sand, Odor, Oily Appearance.	
					16									
10														
15	2	SS	15.0	17.0	13	14	19	16	SW				Dense Dark Gray Fine To Medium Sand, Odor, Oily Appearance.	
					20									
20														
25	3	SS	24.0	26.0	14	16	19	15	SW				Medium Dense To Dense Gray Fine To Coarse Sand, Some Fine To Coarse Gravel.	
					25									
	4	SS	26.0	28.0	7	15	60	24	SW				Hard Gray Clay, Some Gravel, Silt And Sand At 27.5 Ft.	
					43							28.0		
30													Bottom Of Boring At 28.0 Ft.	

Notes:

1. Boring Was Advanced By Mud Rotary Drilling Using A 6-in. Diameter Tricone Roller Bit.
2. Ground Water Was Encountered At 3.0 Ft. Below Ground Surface During Drilling.
3. Upon Completion, Boring Was Backfilled With Cement/Bentonite Grout From 28.0 Ft. To Ground Surface.

Rev. 8-88

BORING LOG

PROJECT No. 87-126-04
BORING No. S-46
LOGGED BY SEM
PAGE No. 1 of 1

PROJECT NAME WAUKEGAN HARBOR
BORING LOCATION N 4415.35 E 5251.99 SURFACE ELEVATION 584 46
DRILLER Fox Drilling, Inc. DATE: START 8/2/89 FINISH 8/2/89

DEPTH	SAMPLE No.	SAMPLE TYPE	INTERVAL FROM	INTERVAL TO	BLOW COUNT 0" to 6"	BLOW COUNT 6" to 12"	BLOW COUNT 12" to 18"	REC (in)	USCS SOIL TYPE	WC (%)	qu (TSF)	LAYER DEPTH	SOIL DESCRIPTION AND REMARKS	PIEZO
5	1	SS	5.0	7.0	6 17	11	16	24	SW				Medium Dense Brown To Dark Gray Fine To Coarse Sand, Odor.	
10														
15	2	SS	15.0	17.0	13 25	21	24	16	SW				Dense Dark Gray Fine To Medium Sand, Odor, Oily Appearance.	
20												20.0		
25	3	SS	23.5	25.5	17 25	17	21	14	SM				Dense Dark Gray Fine Sand, Some Silt, Odor, Oily Appearance.	
	4	SS	25.5	27.5	16 96	20	46	0				27.5		
30													Bottom Of Boring At 27.5 Ft. Notes: 1. Boring Was Advanced By Mud Rotary Drilling Using A 6-in. Diameter Tricone Roller Bit. 2. Ground Water Was Encountered At 3.0 Ft. Below Ground Surface During Drilling. 3. Upon Completion, Boring Was Backfilled With Cement/Bentonite Grout From 27.5 Ft. To Ground Surface.	

Rev. 8-88

BORING LOG

PROJECT No. 87-126-04
BORING No. S-47
LOGGED BY SEM
PAGE No. 1 of 1

PROJECT NAME WAUKEGAN HARBOR
BORING LOCATION N 4429.40 E 5207.34 SURFACE ELEVATION 584.32
DRILLER Fox Drilling, Inc. DATE: START 8/2/89 FINISH 8/2/89

DEPTH	SAMPLE No.	SAMPLE TYPE	INTERVAL FROM	INTERVAL TO	BLOW COUNT 0" to 6"	BLOW COUNT 6" to 12"	BLOW COUNT 12" to 18"	REC (in)	USCS SOIL TYPE	WC (%)	qu (TSF)	LAYER DEPTH	SOIL DESCRIPTION AND REMARKS	PIEZO
5	1	SS	5.0	7.0	8	11	20	22	SW				Dense Dark Gray Fine To Coarse Sand, Strong Odor, Oily Appearance.	
					20									
10														
15	2	SS	15.0	17.0	16	20	21	16	SW				Dense Dark Gray Fine To Medium Sand, Strong Odor, Oily Appearance.	
					24									
20												20.0		
													Dense Dark Gray Fine To Medium Sand, Some Silt, Strong Odor, Oily Appearance.	
25	3	SS	24.0	26.0	14	16	18	20	SM					
					30							26.0		
	4	SS	26.3	28.3	19	25	30	10	CL				Hard Light Gray Clay.	
					32							28.3		
30													Bottom Of Boring At 28.3 Ft.	
													Notes:	
													1. Boring Was Advanced By Mud Rotary Drilling Using A 6-In. Diameter Tricone Roller Bit.	
													2. Ground Water Was Encountered At 3.0 Ft. Below Ground Surface During Drilling.	
													3. Upon Completion, Boring Was Backfilled With Cement/Bentonite Grout From 28.3 Ft. To Ground Surface.	

Rev. 8-88

BORING LOG

PROJECT No. 87-126-04
BORING No. S-48
LOGGED BY SEM
PAGE No. 1 of 1

PROJECT NAME WAUKEGAN HARBOR
BORING LOCATION N 4436.62 E 5156.47 SURFACE ELEVATION 584 46
DRILLER Fox Drilling, Inc. DATE: START 8/2/89 FINISH 8/2/89

DEPTH	SAMPLE No.	SAMPLE TYPE	INTERVAL FROM	INTERVAL TO	BLOW COUNT 0" to 6"	BLOW COUNT 6" to 12"	BLOW COUNT 12" to 18"	REC (in)	USCS SOIL TYPE	WC (%)	qu (TSF)	LAYER DEPTH	SOIL DESCRIPTION AND REMARKS	PIEZO
5	1	SS	5.0	7.0	10 21	13	23	24	SW				Dense Brown To Gray Fine To Coarse Sand.	
10														
15	2	SS	15.0	17.0	19 33	28	33	18	SW				Very Dense Gray Fine To Medium Sand.	
20												20.0		
25	3	SS	23.5	25.5	19 68	23	20	14	SM				Very Dense Gray Fine To Medium Sand, Some Silt, Slight Odor.	
	4	SS	25.5	27.5	25 33	27	39	20	CL			25.5	Hard Gray Clay.	
30												27.5	Bottom Of Boring At 27.5 Ft. Notes: 1. Boring Was Advanced By Mud Rotary Drilling Using A 6-In. Diameter Tricone Roller Bit. 2. Ground Water Was Encountered At 3.0 Ft. Below Ground Surface During Drilling. 3. Upon completion, Boring Was Backfilled With Cement/Bentonite Grout From 27.5 Ft. To Ground Surface.	

Rev. 8-88

BORING LOG

PROJECT No. 87-126-04
BORING No. S-49
LOGGED BY SEM
PAGE No. 1 of 1

PROJECT NAME WAUKEGAN HARBOR
BORING LOCATION N 4482.64 E 5167.74 SURFACE ELEVATION 584 33
DRILLER Fox Drilling, Inc. DATE: START 8/11/89 FINISH 8/11/89

DEPTH	SAMPLE No.	SAMPLE TYPE	INTERVAL FROM	INTERVAL TO	BLOW COUNT 0" 6"	BLOW COUNT 6" 12"	BLOW COUNT 12" 18"	REC (in)	USCS SOIL TYPE	WC (%)	qu (TSF)	LAYER DEPTH	SOIL DESCRIPTION AND REMARKS	PIEZO
5	1	SS	5.0	7.0	7	13	15	22	SW				Medium Dense Brown To Gray Fine To Coarse Sand.	
					15									
10														
15	2	SS	15.0	17.0	20	25	25	16	SW				Dense Gray Fine To Coarse Sand.	
					34									
20													Dense Gray Fine Sand, Some Medium To Coarse Sand, Trace Of Silt, Strong Odor.	
25	3	SS	23.5	25.5	20	22	22	16	SW					
					25									
	4	SS	25.5	27.5	87	37	32	12	SW&GW				Very Dense Gray Fine To Coarse Sand And Gravel, Strong Odor. Clay In Tip Of Sampler At 27.5 Ft.	
					34									
												27.5		
30													Bottom Of Boring At 27.5 Ft.	

Notes:

1. Boring Was Advanced By Mud Rotary Drilling Using A 6-In. Diameter Tricone Roller Bit.
2. Ground Water Was Encountered At 3.0 Ft. Below Ground Surface During Drilling.
3. Upon Completion, Boring Was Backfilled With Cement/Bentonite Grout From 27.5 Ft. To Ground Surface.

Rev. 8-88

BORING LOG

PROJECT No. 87-126-04
BORING No. S-50
LOGGED BY SEM
PAGE No. 1 of 1

PROJECT NAME WAUKEGAN HARBOR
BORING LOCATION N 4349.96 E 5343.35 SURFACE ELEVATION 585.33
DRILLER Fox Drilling, Inc. DATE: START 8/10/89 FINISH 8/10/89

DEPTH	SAMPLE No	SAMPLE TYPE	INTERVAL FROM	INTERVAL TO	BLOW COUNT 0" 6" 12"	BLOW COUNT 6" 12" 18"	REC (in)	USCS SOIL TYPE	WC (%)	qu (TSF)	LAYER DEPTH	SOIL DESCRIPTION AND REMARKS	PIEZO
5	1	SS	5.0	7.0	11 14 13 / 16		17	SW				Medium Dense Brown Fine To Coarse Sand, Some Gravel. Dramatic Change At 6.5 Ft. To Dark Gray Sand With Heavy Oily Appearance, Odor. S-50-01 Taken From Bottom Of Sampler.	
10													
15	2	SS	15.0	17.0	16 23 27 / 30		19	SW				Very Dense Dark Gray Fine To Coarse Sand, Strong Odor, Oily Appearance In Drilling Mud.	
20											20.0		
25	3	SS	25.0	27.0	13 21 27 / 32		16	SM			27.0	Dense Dark Gray Fine To Medium Sand, Some Silt, Odor, Oily Appearance In Sampler.	
30	4	SS	27.5	29.5	31 95 54 / 30		18	GW			29.5	Very Dense Fine To Coarse Gravel. Hard Gray Clay At 29.0 Ft.	
												Bottom Of Boring At 29.5 Ft.	

Notes:

1. Boring Was Advanced By Mud Rotary Drilling Using A 6-In. Diameter Tricone Roller Bit.
2. Ground Water Was Encountered At 3.5 Ft. Below Ground Surface During Drilling.
3. Upon Completion, Boring Was Backfilled With Cement/Bentonite Grout From 29.5 Ft. To Ground Surface.

Rev. 8-88

BORING LOG

PROJECT No. 87-126-04
BORING No. S-51
LOGGED BY SEM
PAGE No. 1 of 1

PROJECT NAME WAUKEGAN HARBOR
BORING LOCATION N 4308.47 E 5270.65 SURFACE ELEVATION 584 69
DRILLER Fox Drilling, Inc. DATE: START 8/10/89 FINISH 8/10/89

DEPTH	SAMPLE No.	SAMPLE TYPE	INTERVAL FROM	INTERVAL TO	BLOW COUNT 0" to 6"	BLOW COUNT 6" to 12"	BLOW COUNT 12" to 18"	REC (in)	USCS SOIL TYPE	WC (%)	qu (TSF)	LAYER DEPTH	SOIL DESCRIPTION AND REMARKS	PIEZO
													Boulder/Concrete From 2.0 To 4.0 Ft.	
5	1	SS	5.0	7.0	6	9	15	20	SW&GW				Medium Dense Brown To Gray Fine To Coarse Sand And Gravel, Odor In Tip Of Sampler.	
					22									
10														
15	2	SS	15.0	17.0	14	16	27	18	SW				Dense Gray Fine To Coarse Sand, Odor.	
					30									
20												20.0		
													Dense Gray Fine To Medium Silty Sand, Odor.	
25	3	SS	25.0	27.0	9	14	19	16	SM					
						16						27.0		
	4	SS	27.5	28.5	24	33		12	CL				Hard Gray Clay.	
30												28.5	Bottom Of Boring At 28.5 Ft.	

Notes:

1. Boring Was Advanced By Mud Rotary Drilling Using A 6-In. Diameter Tricone Roller Bit.
2. Ground Water Was Encountered At 3.5 Ft. Below Ground Surface During Drilling.
3. Upon Completion, Boring Was Backfilled With Cement/Bentonite Grout From 28.5 Ft. To Ground Surface.

Rev. 8-88

BORING LOG

PROJECT No. 87-126-04
BORING No. S-52
LOGGED BY SEM
PAGE No. 1 of 1

PROJECT NAME WAUKEGAN HARBOR
BORING LOCATION N 4483.61 E 5071 29 SURFACE ELEVATION 584.25
DRILLER Fox Drilling, Inc. DATE: START 8/11/89 FINISH 8/11/89

DEPTH	SAMPLE No.	SAMPLE TYPE	INTERVAL FROM	INTERVAL TO	BLOW COUNT 0" 6"	BLOW COUNT 6" 12"	BLOW COUNT 12" 18"	REC (in)	USCS SOIL TYPE	WC (%)	qu (TSF)	LAYER DEPTH	SOIL DESCRIPTION AND REMARKS	PIEZO
5	1	SS	5.0	7.0	5	9	16	22	SW				Medium Dense Brown To Gray Fine To Coarse Sand, Odor And Heavy Oily Appearance Beginning At 6.0 To 6.5 Ft.	
					19									
10													Drilling Mud Contains Steady Oily Appearance Beginning At 12.5 Ft.	
15	2	SS	15.0	17.0	12	19	28	17	SW				Dense Gray Fine To Medium Sand, Trace Of Silt, Odor, Oily Appearance In Sampler.	
					33									
20												20.0		
													Very Dense Gray Fine To Medium Sand, Some Silt. Gravel Beginning At 25.5 Ft. Clay In Tip Of Sampler At 26.0 Ft, Odor.	
25	3	SS	24.0	26.0	12	35	47	16	SM					
					41							26.0		
30													Bottom Of Boring At 26.0 Ft.	
													Notes:	
													1. Boring Was Advanced By Mud Rotary Drilling Using A 6-In. Diameter Tricone Roller Bit.	
													2. Ground Water Was Encountered At 3.0 Ft. Below Ground Surface During Drilling.	
													3. Upon Completion, Boring Was Backfilled With Cement/Bentonite Grout From 26.0 Ft. To Ground Surface.	

Rev. 8-88

BORING LOG

PROJECT No. 87-126-(
BORING No. S-53
LOGGED BY SEM
PAGE No. 1 of 1

PROJECT NAME WAUKEGAN HARBOR
BORING LOCATION N 4512.79 E 5368.41 SURFACE ELEVATION 585 69
DRILLER Fox Drilling, Inc. DATE: START 8/7/89 FINISH 8/7/89

DEPTH	SAMPLE No	SAMPLE TYPE	INTERVAL FROM	INTERVAL TO	BLOW COUNT 0" 6"	BLOW COUNT 6" 12"	BLOW COUNT 12" 18"	REC (in)	USCS SOIL TYPE	WC (%)	qu (TSF)	LAYER DEPTH	SOIL DESCRIPTION AND REMARKS	PIEZO
5	1	SS	5.0	7.0	4 9	4	7	22	SW				Medium Dense Brown To Gray Fine To Coarse Sand, Some Fine To Course Gravel.	
10														
15	2	SS	15.0	17.0	36 31	42	33	20	SW				Very Dense Gray Fine To Medium Sand, Trace Of Silt, Faint Odor.	
20												20.0		
25	3	SS	24.0	26.0	16 24	20	22	16	SM				Dense Gray Fine Sand, Some Silt. Some Fine To Coarse Gravel Beginning At 28.5 Ft., Odor, Slight Oily Appearance.	
	4	SS	27.5	29.0	21	25	89	12	SM					
30	5	SS	29.5	30.5	17	23		12	CL			29.5 30.5	Hard Gray Clay, Some Fine To Coarse Gravel. Bottom Of Boring At 30.5 Ft.	
35													Notes: 1. Boring Was Advanced By Mud Rotary Drilling Using A 6-In. Diameter Tricone Roller Bit. 2. Ground Water Was Encountered At 3.0 Ft. Below Ground Surface During Drilling. 3. Upon Completion, Boring Was Backfilled W Cement/Bentonite Grout From 30.5 Ft. To Ground Surface.	

Rev. 8-88

BORING LOG

PROJECT No. 87-126-04
BORING No. S-54
LOGGED BY SEM
PAGE No. 1 of 1

PROJECT NAME WAUKEGAN HARBOR
BORING LOCATION N 4415.14 E 5339 42 SURFACE ELEVATION 585.53
DRILLER Fox Drilling, Inc. DATE: START 8/3/89 FINISH 8/3/89

DEPTH	SAMPLE No.	SAMPLE TYPE	INTERVAL FROM	INTERVAL TO	BLOW COUNT 0" 6"	BLOW COUNT 6" 12"	BLOW COUNT 12" 18"	REC (in)	USCS SOIL TYPE	WC (%)	qu (TSF)	LAYER DEPTH	SOIL DESCRIPTION AND REMARKS	PIEZO
5	1	SS	5.0	7.0	7	12	14	18	SW				Medium Dense Gray Fine To Coarse Sand Odor, Heavy Oily Appearance.	
					19									
10														
15	2	SS	15.0	17.0	19	25	22	19	SW				Dense Gray Fine To Coarse Sand, Odor, Heavy Oily Appearance.	
					21									
20														
25	3	SS	24.0	26.0	15	20	22	18	SW				Dense Gray Fine To Medium Sand, Odor, Heavy Oily Appearance.	
					21									
	4	SS	26.0	26.5	54			2	GW			26.5	Very Dense Fine To Coarse Gravel.	
												27.5		
	5	SS	28.0	29.0	23	25		12	CL			29.0	Hard Gray Clay, Some Fine To Coarse Gravel.	
30													Bottom Of Boring At 29.0 Ft.	

Notes:

1. Boring Was Advanced By Mud Rotary Drilling Using A 6-In. Diameter Tricone Roller Bit.
2. Ground Water Was Encountered At 4.0 Ft. Below Ground Surface During Drilling.
3. Upon Completion, Boring Was Backfilled With Cement/Bentonite Grout From 29.0 Ft. To Ground Surface.

Rev. 8-88

BORING LOG

PROJECT No. 87-126-C
BORING No. S-55
LOGGED BY SEM
PAGE No. 1 of 1

PROJECT NAME WAUKEGAN HARBOR
BORING LOCATION N 4295.90 E 5332.99 SURFACE ELEVATION 585.23
DRILLER Fox Drilling, Inc. DATE: START 8/10/89 FINISH 8/10/89

DEPTH	SAMPLE No.	SAMPLE TYPE	INTERVAL FROM	INTERVAL TO	BLOW COUNT 0" 6"	BLOW COUNT 6" 12"	BLOW COUNT 12" 18"	REC (in)	USCS SOIL TYPE	WC (%)	qu (TSF)	LAYER DEPTH	SOIL DESCRIPTION AND REMARKS	PIEZO
5	1	SS	5.0	7.0	12	10	11	8	SW&GW				Medium Dense Gray Fine To Coarse Sand And Gravel, Slight Odor And Oily Appearance.	
					17									
10														
15	2	SS	15.0	17.0	17	24	26	16	SW				Dense Gray Fine To Coarse Sand, Trace Of Silt, Slight Odor, Slight Oily Appearance In Drilling Mud.	
					27									
20												20.0		
25	3	SS	25.0	27.0	17	25	33	18	SM				Dense Gray Fine To Medium Silty Sand, Odor, Oily Appearance In Drilling Mud.	
					33							27.0		
	4	SS	27.5	29.5	37	80	33	16	GW			29.0	Very Dense Fine To Coarse Gravel. Hard Gray Clay At 29.0 Ft.	
30					27								Bottom Of Boring At 29.0 Ft.	

Notes:

1. Boring Was Advanced By Mud Rotary Drilling Using A 6-In. Diameter Tricone Roller Bit.
2. Ground Water Was Encountered At 3.5 Ft. Below Ground Surface During Drilling.
3. Upon Completion, Boring Was Backfilled With Cement/Bentonite Grout From 29.0 Ft. To Gr[illegible] Surface.

Rev. 8-88

BORING LOG

PROJECT No. 87-126-04
BORING No. S-56
LOGGED BY SEM
PAGE No. 1 of 1

PROJECT NAME WAUKEGAN HARBOR
BORING LOCATION N 4594.76 E 5078.79 SURFACE ELEVATION 584 33
DRILLER Fox Drilling, Inc. DATE: START 8/14/89 FINISH 8/14/89

DEPTH	SAMPLE No.	SAMPLE TYPE	INTERVAL FROM	INTERVAL TO	BLOW COUNT 0" to 6"	BLOW COUNT 6" to 12"	BLOW COUNT 12" to 18"	REC (in)	USCS SOIL TYPE	WC (%)	qu (TSF)	LAYER DEPTH	SOIL DESCRIPTION AND REMARKS	PIEZO
5	1	SS	5.0	7.0	4 8	7	8	9	SW				Medium Dense Brown Fine To Coarse Sand.	
10														
15	2	SS	15.0	17.0	22 31	30	33	20	SW				Very Dense Gray Fine To Coarse Sand, Trace Of Silt.	
20			—									20.0		
25	3	SS	24.0	26.0	17 100/4	20	43	16	SM&GM				Very Dense Gray Fine To Coarse Sand And Gravel, Some Silt, Odor. Clay In Drill Bit At 26.3 Ft.	
												26.3		
30													Bottom Of Boring At 26.3 Ft.	

Notes:

1. Boring Was Advanced By Mud Rotary Drilling Using A 6-In. Diameter Tricone Roller Bit.
2. Ground Water Was Encountered At 3.5 Ft. Below Ground Surface During Drilling.
3. Upon Completion, Boring Was Backfilled With Cement/Bentonite Grout From 26.3 Ft. To Ground Surface.

Rev. 8-88

BORING LOG

PROJECT No. 87-126-04
BORING No. S-57
LOGGED BY SEM
PAGE No. 1 of 1

PROJECT NAME WAUKEGAN HARBOR
BORING LOCATION N 4341.54 E 5064.84 SURFACE ELEVATION 584.1
DRILLER Fox Drilling, Inc. DATE: START 8/15/89 FINISH 8/15/89

DEPTH	SAMPLE No.	SAMPLE TYPE	INTERVAL FROM	INTERVAL TO	BLOW COUNT 0" 6"	BLOW COUNT 6" 12"	BLOW COUNT 12" 18"	REC (in)	USCS SOIL TYPE	WC (%)	qu (TSF)	LAYER DEPTH	SOIL DESCRIPTION AND REMARKS	PIEZO
5	1	SS	5.0	7.0	19	24	30	20	SW				Very Dense Brown To Gray Fine To Coarse Sand.	
					37									
10														
15	2	SS	15.0	17.0	20	29	28	18	SW				Very Dense Gray Fine To Coarse Sand, Slight Odor	
					33									
20														
25	3	SS	24.0	26.0	20	21	40	14	SW&GW				Very Dense Gray Fine To Coarse Sand And Gravel, Slight Odor.	
					40							26.0	Clay In Tip Of Sampler At 26.0 Ft.	
30													Bottom Of Boring At 26.0 Ft.	

Notes:

1. Boring Was Advanced By Mud Rotary Drilling Using A 6-In. Diameter Tricone Roller Bit.
2. Ground Water Was Encountered At 3.0 Ft. Below Ground Surface During Drilling.
3. Upon Completion, Boring Was Backfilled With Cement/Bentonite Grout From 26.0 Ft. To Ground Surface.

Rev. 8-88

BORING LOG

PROJECT No. 87-126-04
BORING No. S-58
LOGGED BY SEM
PAGE No. 1 of 1

PROJECT NAME WAUKEGAN HARBOR
BORING LOCATION N 4439.96 E 5069.33 SURFACE ELEVATION 584 03
DRILLER Fox Drilling, Inc. DATE: START 8/15/89 FINISH 8/15/89

DEPTH	SAMPLE No	SAMPLE TYPE	INTERVAL FROM	INTERVAL TO	BLOW COUNT 0" to 6"	BLOW COUNT 6" to 12"	BLOW COUNT 12" to 18"	REC (in)	USCS SOIL TYPE	WC (%)	qu (TSF)	LAYER DEPTH	SOIL DESCRIPTION AND REMARKS	PIEZO
5	1	SS	5.0	7.0	5	9	13	24	SW				Medium Dense Brown To Gray Fine To Coarse Sand, Some Fine To Coarse Gravel, Strong Odor And Oily Appearance Beginning At 5.5 Ft.	
					16									
10														
15	2	SS	15.0	17.0	18	16	19	10	SW				Dense Gray Fine To Coase Sand, Trace Of Silt. Odor, Oily Appearance In Drilling Mud.	
					13									
20												20.0		
													Very Dense Gray Fine Silty Sand. Fine To Coarse Gravel, Some Clay Beginning At 25.0 Ft. Hard Gray Clay Beginning At 25.5 Ft.	
25	3	SS	24.0	26.0	14	62	44	18	SM					
					27							26.0		
													Bottom Of Boring At 26.0 Ft.	
30													Notes:	
													1. Boring Was Advanced By Mud Rotary Drilling Using A 6-In. Diameter Tricone Roller Bit.	
													2. Ground Water Was Encountered At 3.0 Ft. Below Ground Surface During Drilling.	
													3. Upon Completion, Boring Was Backfilled With Cement/Bentonite Grout From 26.0 Ft. To Ground Surface.	

Rev. 8-88

BORING LOG

PROJECT No. 87-126-04
BORING No. S-58A
LOGGED BY SEM
PAGE No. 1 of 1

PROJECT NAME WAUKEGAN HARBOR
BORING LOCATION N 4390.09 E 5065.63 SURFACE ELEVATION 584.01
DRILLER Fox Drilling, Inc. DATE: START 8/15/89 FINISH 8/15/89

DEPTH	SAMPLE No.	SAMPLE TYPE	SAMPLE INTERVAL FROM	SAMPLE INTERVAL TO	BLOW COUNT 0" 6"	BLOW COUNT 6" 12"	BLOW COUNT 12" 18"	REC (in)	USCS SOIL TYPE	WC (%)	qu (TSF)	LAYER DEPTH	SOIL DESCRIPTION AND REMARKS	PIEZO
5													Strong Odor And Heavy Oily Appearance On Auger Cuttings Beginning At 5.5 Ft.	
												7.5	Bottom Of Boring At 7.5 Ft.	
10													Notes: 1. Boring Was Advanced Using 3-3/4-In. I.D. Hollow Stem Augers. 2. Ground Water Was Encountered At 3.0 Ft. Below Ground Surface During Drilling. 3. Upon Completion, Boring Was Backfilled With Auger Cuttings From 7.5 Ft. To Ground Surface.	

Rev. 8-88

BORING LOG

PROJECT No. 87-126-04
BORING No. S-58B
LOGGED BY SEM
PAGE No. 1 of 1

PROJECT NAME WAUKEGAN HARBOR
BORING LOCATION N 4364.87 E 5065.06 SURFACE ELEVATION 584.08
DRILLER Fox Drilling, Inc. DATE: START 8/15/89 FINISH 8/15/89

DEPTH	SAMPLE No.	SAMPLE TYPE	SAMPLE INTERVAL FROM	SAMPLE INTERVAL TO	BLOW COUNT 0" 6"	BLOW COUNT 6" 12"	BLOW COUNT 12" 18"	REC (in)	USCS SOIL TYPE	WC (%)	qu (TSF)	LAYER DEPTH	SOIL DESCRIPTION AND REMARKS	PIEZO
5													Strong Odor And Heavy Oily Appearance On Auger Cuttings Beginning At 6.0 Ft.	
												7.5	Bottom Of Boring At 7.5 Ft.	
10													Notes:	
													1. Boring Was Advanced Using 3-3/4-in. I.D. Hollow Stem Augers.	
													2. Ground Water Was Encountered At 3.0 Ft. Below Ground Surface During Drilling.	
													3. Upon Completion, Boring Was Backfilled With Auger Cuttings From 7.5 Ft. To Ground Surface.	

Rev. 8-88

BORING LOG

PROJECT No. 87-126-04
BORING No. S-59
LOGGED BY SEM
PAGE No. 1 of 1

PROJECT NAME WAUKEGAN HARBOR
BORING LOCATION N 4534.61 E 5074.08 SURFACE ELEVATION 584.19
DRILLER Fox Drilling, Inc. DATE: START 8/8/89 FINISH 8/8/89

DEPTH	SAMPLE No.	SAMPLE TYPE	INTERVAL FROM	INTERVAL TO	BLOW COUNT 0" to 6"	BLOW COUNT 6" to 12"	BLOW COUNT 12" to 18"	REC (in)	USCS SOIL TYPE	WC (%)	qu (TSF)	LAYER DEPTH	SOIL DESCRIPTION AND REMARKS	PIEZO
5	1	SS	5.0	7.0	6	11	13	23	SW				Medium Dense Brown To Gray Fine To Coarse Sand.	
					15									
10														
15	2	SS	15.0	17.0	22	24	29	18	SW				Very Dense Gray Fine To Medium Sand.	
					29									
20												20.0		
													Dense Gray Fine Silty Sand. Gravel Beginning At 25.0 Ft., Heavy Oily Appearance. Clay At Tip Of Sampler At 26.0 Ft.	
25	3	SS	24.0	26.0	15	18	20	16	SM					
					40							26.0		
30													Bottom Of Boring At 26.0 Ft.	

Notes:

1. Boring Was Advanced By Mud Rotary Drilling Using A 6-In. Diameter Tricone Roller Bit.
2. Ground Water Was Encountered At 3.0 Ft. Below Ground Surface During Drilling.
3. Upon Completion, Boring Was Backfilled With Cement/Bentonite Grout From 26.0 Ft. To Ground Surface.

Rev. 8-88

BORING LOG

PROJECT No. 87-126-04
BORING No. S-60
LOGGED BY SEM
PAGE No. 1 of 1

PROJECT NAME WAUKEGAN HARBOR
BORING LOCATION N 4431.11 E 5293.35 SURFACE ELEVATION 584.79
DRILLER Fox Drilling, Inc. DATE: START 8/3/89 FINISH 8/3/89

DEPTH	SAMPLE No	SAMPLE TYPE	INTERVAL FROM	INTERVAL TO	BLOW COUNT 0"-6"	BLOW COUNT 6"-12"	BLOW COUNT 12"-18"	REC (in)	USCS SOIL TYPE	WC (%)	qu (TSF)	LAYER DEPTH	SOIL DESCRIPTION AND REMARKS	PIEZO
5	1	SS	5.0	7.0	10	15	17	20	SW				Dense Gray Fine To Coarse Sand, Odor, Heavy Oily Appearance.	
					19									
10														
15	2	SS	15.0	17.0	13	15	15	18	SW				Medium Dense Gray Fine To Medium Sand, Odor, Heavy Oily Appearance.	
					21									
20												20.0		
													Dense Gray Silty Sand.	
25	3	SS	24.0	26.0	22	22	20	18	SM					
					18							26.0		
	4	SS	26.0	27.0	83	100		6	GW				Very Dense Fine To Coarse Gravel. Hard Gray Clay Beginning At 27.5 Ft.	
												29.0		
30													Bottom Of Boring At 29.0 Ft.	
													Notes:	
													1. Boring Was Advanced By Mud Rotary Drilling Using A 6-In. Diameter Tricone Roller Bit.	
													2. Ground Water Was Encountered At 3.5 Ft. Below Ground Surface During Drilling.	
													3. Upon Completion, Boring Was Backfilled With Cement/Bentonite Grout From 29.0 Ft. To Ground Surface.	

Rev. 8-88

BORING LOG

PROJECT No. 87-126-04
BORING No. S-61
LOGGED BY SEM
PAGE No. 1 of 1

PROJECT NAME WAUKEGAN HARBOR
BORING LOCATION N 4388.64 E 5286.44 SURFACE ELEVATION 584 87
DRILLER Fox Drilling, Inc. DATE: START 8/4/89 FINISH 8/4/89

DEPTH	SAMPLE No.	SAMPLE TYPE	INTERVAL FROM	INTERVAL TO	BLOW COUNT 0" 6"	BLOW COUNT 6" 12"	BLOW COUNT 12" 18"	REC (in)	USCS SOIL TYPE	WC (%)	qu (TSF)	LAYER DEPTH	SOIL DESCRIPTION AND REMARKS	PIEZO
5	1	SS	5.0	7.0	8	13	25	22	SW				Dense Gray Fine To Coarse Sand, Some Gravel, Slight Oily Appearance.	
					31									
10														
15	2	SS	15.0	17.0	19	25	22	20	SW				Dense Gray Fine To Coarse Sand, Odor, Slight Oily Appearance.	
					29									
20												20.0		
													Dense Gray Silty Fine Sand, Odor, Oily Appearance.	
25	3	SS	24.0	26.0	17	22	19	24	SM					
					24							27.0		
	4	SS	27.0	28.5	28	32	44	6	GW				Very Dense Fine To Coarse Gravel. Hard Gray	
												28.5	Clay At 28.0 Ft.	
30													Bottom Of Boring At 28.5 Ft.	
													Notes:	
													1. Boring Was Advanced By Mud Rotary Drilling Using A 6-In. Diameter Tricone Roller Bit.	
													2. Ground Water Was Encountered At 3.5 Ft. Below Ground Surface During Drilling.	
													3. Upon Completion, Boring Was Backfilled With Cement/Bentonite Grout From 28.5 Ft. To Ground Surface.	

Rev. 8-88

BORING LOG

PROJECT No. 87-126-04
BORING No. S-62
LOGGED BY SEM
PAGE No. 1 of 1

PROJECT NAME OUTBOARD MARINE CORPORATION, WAUKEGAN HARBOR
BORING LOCATION N 4362.51 E 5240.26 SURFACE ELEVATION 584.5
DRILLER Fox Drilling, Inc. DATE: START 8/7/89 FINISH 8/7/89

DEPTH	SAMPLE No.	SAMPLE TYPE	INTERVAL FROM	INTERVAL TO	BLOW COUNT 0" to 6"	BLOW COUNT 6" to 12"	BLOW COUNT 12" to 18"	REC (in)	USCS SOIL TYPE	WC (%)	qu (TSF)	LAYER DEPTH	SOIL DESCRIPTION AND REMARKS	PIEZO
5	1	SS	5.0	7.0	7	11	13	22	SW				Medium Dense Brown Fine To Coarse Sand, Some Gravel.	
					7									
10														
15	2	SS	15.0	17.0	14	19	23	20	SW				Dense Gray Fine To Medium Sand, Trace Of Gravel, Slight Odor.	
					30									
20												20.0		
													Medium Dense Gray Fine To Medium Silty Sand, Some Gravel, Odor.	
25	3	SS	24.0	26.0	12	12	4	12	SM					
					4							26.0		
	4	SS	26.0	27.0	38	50		8	CL			27.0	Hard Gray Clay.	
30													Bottom Of Boring At 27.0 Ft.	
													Notes:	
													1. Boring Was Advanced By Mud Rotary Drilling Using A 6-In. Diameter Tricone Roller Bit.	
													2. Ground Water Was Encountered At 3.5 Ft. Below Ground Surface During Drilling.	
													3. Upon Completion, Boring Was Backfilled With Cement/Bentonite Grout From 27.0 Ft. To Ground Surface.	

Rev. 8-88

BORING LOG

PROJECT No. 87-126-04
BORING No. S-63
LOGGED BY SEM
PAGE No. 1 of 1

PROJECT NAME WAUKEGAN HARBOR
BORING LOCATION N 4369.37 E 5195.80 SURFACE ELEVATION 584 43
DRILLER Fox Drilling, Inc. DATE: START 8/7/89 FINISH 8/7/89

DEPTH	SAMPLE No.	SAMPLE TYPE	INTERVAL FROM	INTERVAL TO	BLOW COUNT 0" 6"	BLOW COUNT 6" 12"	BLOW COUNT 12" 18"	REC (in)	USCS SOIL TYPE	WC (%)	qu (TSF)	LAYER DEPTH	SOIL DESCRIPTION AND REMARKS	PIEZO
5	1	SS	5.0	7.0	6	7	11	24	SW				Medium Dense Brown To Gray Fine To Coarse Sand.	
					19									
10														
15	2	SS	15.0	17.0	11	21	24	20	SW				Dense Gray Fine To Medium Sand, Slight Odor.	
					26									
20												20.0		
25	3	SS	24.0	26.0	19	19	24	18	SM				Dense Gray Fine Silty Sand, Odor, Slight Oily Appearance.	
					24							27.0		
	4	SS	27.0	28.0	20	30		12	CL			28.0	Hard Gray Clay, Some Gravel.	
30													Bottom Of Boring At 28.0 Ft.	

Notes:

1. Boring Was Advanced By Mud Rotary Drilling Using A 6-In. Diameter Tricone Roller Bit.
2. Ground Water Was Encountered At 3.0 Ft. Below Ground Surface During Drilling.
3. Upon Completion, Boring Was Backfilled With Cement/Bentonite Grout From 28.0 Ft. To Ground Surface.

Rev. 8-88

BORING LOG

PROJECT No. 87-126-04
BORING No. S-64
LOGGED BY SEM
PAGE No. 1 of 1

PROJECT NAME WAUKEGAN HARBOR
BORING LOCATION N 4375.68 E 5151.40 SURFACE ELEVATION 584.42
DRILLER Fox Drilling, Inc. DATE: START 8/8/89 FINISH 8/8/89

DEPTH	SAMPLE No.	SAMPLE TYPE	INTERVAL FROM	INTERVAL TO	BLOW COUNT 0" 6"	BLOW COUNT 6" 12"	BLOW COUNT 12" 18"	REC (In)	USCS SOIL TYPE	WC (%)	qu (TSF)	LAYER DEPTH	SOIL DESCRIPTION AND REMARKS	PIEZO
5	1	SS	5.0	7.0	14	22	32	24	SW				Very Dense Brown Fine To Coarse Sand, Some Fine Gravel.	
					36									
10														
15	2	SS	15.0	17.0	14	20	23	19	SW				Dense Gray Fine To Medium Sand.	
					28									
	3	SS	17.0	19.0	17	23	26	16	SW					
20					30									
25	4	SS	24.0	26.0	15	22	24	16	SW				Dense Gray Fine To Medium Sand, Odor.	
					33							27.0		
	5	SS	27.0	28.0	16	20		12	CL			28.0	Hard Gray Clay, Some Gravel, Odor.	
30													Bottom Of Boring At 28.0 Ft.	
													Notes:	
													1. Boring Was Advanced By Mud Rotary Drilling Using A 6-In. Diameter Tricone Roller Bit.	
													2. Ground Water Was Encountered At 3.0 Ft. Below Ground Surface During Drilling.	
													3. Upon Completion, Boring Was Backfilled With Cement/Bentonite Grout From 28.0 Ft. To Ground Surface.	

Rev. 8-88

BORING LOG

PROJECT No. 87-126-04
BORING No. S-65
LOGGED BY SEM
PAGE No. 1 of 1

PROJECT NAME WAUKEGAN HARBOR
BORING LOCATION N 4483.74 E 5119.99 SURFACE ELEVATION 584.31
DRILLER Fox Drilling, Inc. DATE: START 8/15/89 FINISH 8/15/89

DEPTH	SAMPLE No.	SAMPLE TYPE	INTERVAL FROM	INTERVAL TO	BLOW COUNT 0" 6"	BLOW COUNT 6" 12"	BLOW COUNT 12" 18"	REC (in)	USCS SOIL TYPE	WC (%)	qu (TSF)	LAYER DEPTH	SOIL DESCRIPTION AND REMARKS	PIEZO
5	1	SS	5.0	7.0	9	20	22	24	SW				Dense Brown To Gray Fine To Coarse Sand.	
					29									
10														
15	2	SS	15.0	17.0	24	30	31	16	SW				Very Dense Gray Fine To Coarse Sand, Trace Of Silt, Slight Odor, Slight Oily Appearance.	
					31									
20												20.0		
													Very Dense Fine To Medium Gray Silty Sand Some Fine To Coarse Gravel Beginning At 25.0 Ft.	
25	3	SS	24.0	26.0	17	19	50	16	SM				Hard Gray Clay Beginning At 26.5 Ft.	
					100							27.0		
30													Bottom Of Boring At 27.0 Ft.	

Notes:

1. Boring Was Advanced By Mud Rotary Drilling Using A 6-in. Diameter Tricone Roller Bit.
2. Ground Water Was Encountered At 3.0 Ft. Below Ground Surface During Drilling.
3. Upon Completion, Boring Was Backfilled With Cement/Bentonite Grout From 27.0 Ft. To Ground Surface.

Rev. 8-88

BORING LOG

PROJECT No. 87-126-04
BORING No. S-65A
LOGGED BY SEM
PAGE No. 1 of 1

PROJECT NAME WAUKEGAN HARBOR
BORING LOCATION N 4433.68 E 5117.43 SURFACE ELEVATION 584 45
DRILLER Fox Drilling, Inc. DATE: START 8/16/89 FINISH 8/16/89

DEPTH	SAMPLE No.	SAMPLE TYPE	INTERVAL FROM	INTERVAL TO	BLOW COUNT 0"-6"	BLOW COUNT 6"-12"	BLOW COUNT 12"-18"	REC (in)	USCS SOIL TYPE	WC (%)	qu (TSF)	LAYER DEPTH	SOIL DESCRIPTION AND REMARKS	PIEZO
5	1	A	4.0	5.0					SW				Brown Fine To Coarse Sand, Some Gravel.	
10												10.0		
15	2	SS	15.0	17.0	19	22	26	18	SM				Dense Gray Fine To Coarse Sand, Some Silt, Slight Odor.	
					24									
20														
25													Very Dense Gray Fine Silty Sand. Dense Fine To Coarse Gravel Beginning At 25.5 Ft. Hard Gray Clay Beginning At 26.0 Ft.	
	3	SS	25.0	27.0	72	22	26	22	SM					
					26							27.0		
30													Bottom Of Boring At 27.0 Ft.	

Notes:

1. Boring Was Advanced By Mud Rotary Drilling Using A 6-In. Diameter Tricone Roller Bit.
2. Ground Water Was Encountered At 3.0 Ft. Below Ground Surface During Drilling.
3. Upon Completion, Boring Was Backfilled With Cement/Bentonite Grout From 27.0 Ft. To Ground Surface.

Rev. 8-88

BORING LOG

PROJECT No. 87-126-04
BORING No. S-65B
LOGGED BY SEM
PAGE No. 1 of 1

PROJECT NAME WAUKEGAN HARBOR
BORING LOCATION N 4382.03 E 5110.26 SURFACE ELEVATION 584.32
DRILLER Fox Drilling, Inc. DATE: START 8/16/89 FINISH 8/16/89

DEPTH	SAMPLE No.	SAMPLE TYPE	INTERVAL FROM	INTERVAL TO	BLOW COUNT 0" 6"	BLOW COUNT 6" 12"	BLOW COUNT 12" 18"	REC (in)	USCS SOIL TYPE	WC (%)	qu (TSF)	LAYER DEPTH	SOIL DESCRIPTION AND REMARKS	PIEZO
5	1	A	6.0	6.5					SW				Brown Fine To Coarse Sand, Some Fine Gravel.	
10												10.0		
15	2	SS	15.0	17.0	14	25	20	20	SM				Dense Gray Fine To Coarse Sand, Some Silt, Slight Odor.	
					22									
20														
25	3	SS	24.5	26.5	11	13	18	12	SM				Medium Dense Gray To Brown Fine To Medium Silty Sand. Gravel Beginning At 26.5 Ft. Hard Gray Clay At 26.8 Ft.	
					18							27.0		
30													Bottom Of Boring At 27.0 Ft.	

Notes:

1. Boring Was Advanced By Mud Rotary Drilling Using A 6-in. Diameter Tricone Roller Bit.
2. Ground Water Was Encountered At 3.0 Ft. Below Ground Surface During Drilling.
3. Upon Completion, Boring Was Backfilled With Cement/Bentonite Grout From 27.0 Ft. To Ground Surface.

Rev. 8-88

BORING LOG

PROJECT No. 87-126-04
BORING No. S-67
LOGGED BY SEM
PAGE No. 1 of 1

PROJECT NAME WAUKEGAN HARBOR
BORING LOCATION N 4517.05 E 5334.51 SURFACE ELEVATION 586.32
DRILLER Fox Drilling, Inc. DATE: START 8/9/89 FINISH 8/9/89

DEPTH	SAMPLE No	SAMPLE TYPE	INTERVAL FROM	INTERVAL TO	BLOW COUNT 0" 6"	BLOW COUNT 6" 12"	BLOW COUNT 12" 18"	REC (in)	USCS SOIL TYPE	WC (%)	qu (TSF)	LAYER DEPTH	SOIL DESCRIPTION AND REMARKS	PIEZO
5	1	SS	5.0	7.0	14	17	17	18	SW				Dense Brown Fine To Coarse Sand, Some Fine To Coarse Gravel.	
					19									
10														
15														
	2	SS	16.0	18.0	17	24	21	15	SW				Dense Gray Fine To Medium Sand, Trace Of Silt.	
					22									
20												20.0		
													Medium Dense Gray Fine To Medium Silty Sand, Slight Odor.	
25	3	SS	25.0	27.0	17	14	16	16	SM				Very Dense Gray Fine Silty Sand. Gravel Beginning At 27.5 Ft. Hard Gray Clay At 28.5 Ft.	
					15									
	4	SS	27.0	29.0	16	50	29	14	SM					
					27							29.0		
30													Bottom Of Boring At 29.0 Ft.	
													Notes:	
													1. Boring Was Advanced By Mud Rotary Drilling Using A 6-In. Diameter Tricone Roller Bit.	
													2. Ground Water Was Encountered At 4.5 Ft. Below Ground Surface During Drilling.	
													3. Upon Completion, Boring Was Backfilled With Cement/Bentonite Grout From 29.0 Ft. To Ground Surface.	

Rev. 8-88

BORING LOG

PROJECT No. 87-126-04
BORING No. S-68
LOGGED BY SEM
PAGE No. 1 of 1

PROJECT NAME WAUKEGAN HARBOR
BORING LOCATION N 4352.50 E 5277.62 SURFACE ELEVATION 584 78
DRILLER Fox Drilling, Inc. DATE: START 8/9/89 FINISH 8/9/89

DEPTH	SAMPLE No.	SAMPLE TYPE	INTERVAL FROM	INTERVAL TO	BLOW COUNT 0" to 6"	BLOW COUNT 6" to 12"	BLOW COUNT 12" to 18"	REC (in)	USCS SOIL TYPE	WC (%)	qu (TSF)	LAYER DEPTH	SOIL DESCRIPTION AND REMARKS	PIEZO
5	1	SS	5.0	7.0	7	11	15	16	SW				Medium Dense Brown To Gray Fine To Coarse Sand, Some Fine To Coarse Gravel, Slight Odor.	
					18									
10												10.0		
15	2	SS	15.0	17.0	14	18	22	16	SM				Dense Gray Fine To Medium Sand, Some Silt, Odor, Oily Appearance.	
					25									
20														
25	3	SS	24.0	26.0	12	15	24	18	SM				Dense Gray Fine Silty Sand, Odor, Oily Appearance.	
					25									
	4	SS	27.0	27.5	85			6	SM			28.0		
	5	SS	28.0	29.0	56	58		12	CL			29.0	Hard Gray Clay, Some Gravel.	
30													Bottom Of Boring At 29.0 Ft.	

Notes:

1. Boring Was Advanced By Mud Rotary Drilling Using A 6-In. Diameter Tricone Roller Bit.
2. Ground Water Was Encountered At 3.0 Ft. Below Ground Surface During Drilling.
3. Upon Completion, Boring Was Backfilled With Cement/Bentonite Grout From 29.0 Ft. To Ground Surface.

Rev. 8-88

BORING LOG

PROJECT No. 87-126-04
BORING No. S-70
LOGGED BY SEM
PAGE No. 1 of 1

PROJECT NAME WAUKEGAN HARBOR
BORING LOCATION N 4405.34 E 5388.88 SURFACE ELEVATION 585.43
DRILLER Fox Drilling, Inc. DATE: START 8/8/89 FINISH 8/8/89

DEPTH	SAMPLE No.	SAMPLE TYPE	INTERVAL FROM	INTERVAL TO	BLOW COUNT 0" 6"	BLOW COUNT 6" 12"	BLOW COUNT 12" 18"	REC (in)	USCS SOIL TYPE	WC (%)	qu (TSF)	LAYER DEPTH	SOIL DESCRIPTION AND REMARKS	PIEZO
5	1	SS	5.0	7.0	7	12	16	22	SW&GW				Medium Dense Brown Fine To Coarse Sand And Gravel.	
					13									
10												10.0		
15	2	SS	15.0	17.0	24	33	37	18	SM				Very Dense Gray Fine To Medium Sand, Some Silt.	
					40									
20														
25	3	SS	24.0	26.0	19	25	25	18	SM				Dense Gray Fine To Medium Sand, Some Silt. Fine To Coarse Gravel Beginning At 28.0 Ft.	
					22									
	4	SS	27.0	29.0	33	40	32	18	SM				Hard Gray Clay At 28.5 Ft.	
					32							29.0		
30													Bottom Of Boring At 29.0 Ft.	

Notes:

1. Boring Was Advanced By Mud Rotary Drilling Using A 6-In. Diameter Tricone Roller Bit.
2. Ground Water Was Encountered At 3.5 Ft. Below Ground Surface During Drilling.
3. Upon Completion, Boring Was Backfilled With Cement/Bentonite Grout From 29.0 Ft. To Ground Surface.

Rev. 8-88

BORING LOG

PROJECT No. 87-126-04
BORING No. S-71
LOGGED BY SEM
PAGE No. 1 of 1

PROJECT NAME WAUKEGAN HARBOR
BORING LOCATION N 4343.86 E 5389.92 SURFACE ELEVATION 585.5±
DRILLER Fox Drilling, Inc. DATE: START 8/14/89 FINISH 8/14/89

DEPTH	SAMPLE No.	SAMPLE TYPE	INTERVAL FROM	INTERVAL TO	BLOW COUNT 0" to 6"	BLOW COUNT 6" to 12"	BLOW COUNT 12" to 18"	REC (in)	USCS SOIL TYPE	WC (%)	qu (TSF)	LAYER DEPTH	SOIL DESCRIPTION AND REMARKS	PIEZO
5	1	SS	5.0	7.0	7	16	20	22	SW				Dense Brown Fine To Coarse Sand.	
					26									
10														
15	2	SS	15.0	17.0	15	30	35	16	SW				Very Dense Gray Fine To Coarse Sand, Trace Of Silt.	
					32									
20												20.0		
													Very Dense Gray Fine To Medium Silty Sand, Odor.	
25	3	SS	25.5	27.5	15	23	30	20	SM					
					29							27.5	Very Dense Fine To Coarse Gravel, Slight	
	4	SS	27.5	29.0	66	57	62	10	GW			29.0	Odor. Hard Gray Clay At 28.5 Ft.	
30													Bottom Of Boring At 29.0 Ft.	
													Notes:	
													1. Boring Was Advanced By Mud Rotary Drilling Using A 6-In. Diameter Tricone Roller Bit.	
													2. Ground Water Was Encountered At 4.0 Ft. Below Ground Surface During Drilling.	
													3. Upon Completion, Boring Was Backfilled With Cement/Bentonite Grout From 29.0 Ft. To Ground Surface.	

Rev. 8-88

BORING LOG

PROJECT No. 87-126-04
BORING No. S-72
LOGGED BY SEM
PAGE No. 1 of 1

PROJECT NAME WAUKEGAN HARBOR
BORING LOCATION N 4283.96 E 5389.22 SURFACE ELEVATION 583.37
DRILLER Fox Drilling, Inc. DATE: START 8/16/89 FINISH 8/16/89

DEPTH	SAMPLE No.	SAMPLE TYPE	INTERVAL FROM	INTERVAL TO	BLOW COUNT 0" 6"	BLOW COUNT 6" 12"	BLOW COUNT 12" 18"	REC (in)	USCS SOIL TYPE	WC (%)	qu (TSF)	LAYER DEPTH	SOIL DESCRIPTION AND REMARKS	PIEZO
5	1	A	4.0	4.5					SW				Gray Fine To Coarse Sand.	
10												10.0		
15	2	SS	15.0	17.0	27	26	17	24	SM				Dense Gray Fine To Coarse Sand, Some Silt.	
20					18									
25														
30	3	SS	27.0	29.0	22	93	127	24	SM				Very Dense Gray Fine To Medium Silty Sand. Gray Fine To Coarse Gravel Beginning At 28.5 Ft. Hard Gray Clay At 28.8 Ft. Slight Odor.	
					40							29.0		
													Bottom Of Boring At 29.0 Ft.	

Notes:

1. Boring Was Advanced By Mud Rotary Drilling Using A 6-In. Diameter Tricone Roller Bit.
2. Ground Water Was Encountered At 4.0 Ft. Below Ground Surface During Drilling.
3. Upon Completion, Boring Was Backfilled With Cement/Bentonite Grout From 29.0 Ft. To Ground Surface.

Rev. 8-88

BORING LOG

PROJECT No. 87-126-04
BORING No. S-80
LOGGED BY SEM
PAGE No. 1 of 1

PROJECT NAME WAUKEGAN HARBOR
BORING LOCATION N 4581.11 E 4999.25 SURFACE ELEVATION 583.86
DRILLER Fox Drilling, Inc. DATE: START 8/11/89 FINISH 8/11/89

DEPTH	SAMPLE No.	SAMPLE TYPE	INTERVAL FROM	INTERVAL TO	BLOW COUNT 0" 6" 6"	BLOW COUNT 6" 12" 12"	BLOW COUNT 12" 18"	REC (in)	USCS SOIL TYPE	WC (%)	qu (TSF)	LAYER DEPTH	SOIL DESCRIPTION AND REMARKS	PIEZO
5	1	SS	5.0	7.0	4	3	5	16	SW&GW				Loose Brown To Gray Fine To Coarse Sand And Gravel.	
					13									
10												10.0		
15	2	SS	15.0	17.0	17	19	26	20	SM				Dense Gray Fine To Medium Silty Sand.	
					25									
20												23.0		
25	3	SS	24.0	26.0	100	38	30	16	GW				Very Dense Gray Fine To Coarse Gravel, Some Fine To Coarse Sand.	
					50							26.0	Hard Gray Clay At 25.5 Ft.	
30													Bottom Of Boring At 26.0 Ft.	

Notes:

1. Boring Was Advanced By Mud Rotary Drilling Using A 6-In. Diameter Tricone Roller Bit.
2. Ground Water Was Encountered At 2.5 Ft. Below Ground Surface During Drilling.
3. Upon Completion, Boring Was Backfilled With Cement/Bentonite Grout From 26.0 Ft. To Ground Surface.

Rev. 8-88

BORING LOG

PROJECT No. 87-126-04
BORING No. S-81
LOGGED BY SEM
PAGE No. 1 of 1

PROJECT NAME WAUKEGAN HARBOR
BORING LOCATION N 4453.90 E 5035.99 SURFACE ELEVATION 583.91
DRILLER Fox Drilling, Inc. DATE: START 8/16/89 FINISH 8/16/89

DEPTH	SAMPLE No.	SAMPLE TYPE	INTERVAL FROM	INTERVAL TO	BLOW COUNT 0" 6"	BLOW COUNT 6" 12"	BLOW COUNT 12" 18"	REC (in)	USCS SOIL TYPE	WC (%)	qu (TSF)	LAYER DEPTH	SOIL DESCRIPTION AND REMARKS	PIEZO
5	1	AS	5.0	5.5					SW				Brown Fine To Coarse Sand, Some Fine Gravel.	
10														
15	2	SS	15.0	17.0	14	18	19	18	SW				Dense Gray Fine To Medium Sand, Trace Of Silt, Trace Of Gravel, Odor.	
					29									
20												20.0		
													Very Dense Gray Fine To Medium Silty Sand. Gravel Beginning At 25.5 Ft., Odor. Hard Gray Clay At 26.0 Ft.	
25	3	SS	24.0	26.0	14	43	53	16	SM					
					41							26.0		
30													Bottom Of Boring At 26.0 Ft.	

Notes:

1. Boring Was Advanced By Mud Rotary Drilling Using A 6-In. Diameter Tricone Roller Bit.
2. Ground Water Was Encountered At 3.0 Ft. Below Ground Surface During Drilling.
3. Upon Completion, Boring Was Backfilled With Cement/Bentonite Grout From 26.0 Ft. To Ground Surface.

Rev. 8-88

BORING LOG

PROJECT No. 87-126-04
BORING No. S-90
LOGGED BY TCD
PAGE No. 1 of 1

PROJECT NAME WAUKEGAN HARBOR
BORING LOCATION N 4679.92 E 4967.06 SURFACE ELEVATION 583.76
DRILLER FOX DRILLING INC. DATE: START 9/21/89 FINISH 9/21/89

DEPTH	SAMPLE No.	SAMPLE TYPE	INTERVAL FROM	INTERVAL TO	BLOW COUNT 0" 6"	BLOW COUNT 6" 12"	BLOW COUNT 12" 18"	REC (in)	USCS SOIL TYPE	WC (%)	qu (TSF)	LAYER DEPTH	SOIL DESCRIPTION AND REMARKS	PIEZO
5	1	SS	5.0	7.0	9	13	14	24	SP				Light Brown Fine To Medium Sand, Trace Of Silt.	
					28									
10														
15	2	SS	15.0	17.0	13	21	21	20	SP				Dark Brown Fine To Medium Sand, Trace Of Silt.	
					25									
20														
25	3	SS	24.0	26.0	12	13	46	20	SP				Dark Brown To Gray Fine To Medium Sand, Some Silt, Slight Odor.	
					44				CL			25.5	Gray Silty Clay.	
													Bottom Of Boring At 26.0 Ft.	
30													Notes: 1. Boring Was Advanced By Mud Rotary Drilling Using A 6-In. Diameter Tricone Roller Bit. 2. Ground Water Was Encountered At 3.0 Ft. Below Ground Surface During Drilling. 3. Upon Completion, Boring Was Backfilled With Cement/Bentonite Grout From 26.0 Ft. To Ground Surface.	

Rev. 8-88

BORING LOG

PROJECT No. 87-126-04
BORING No. S-91
LOGGED BY TCD
PAGE No. 1 of 1

PROJECT NAME WAUKEGAN HARBOR
BORING LOCATION N 4686.85 E 5129.99 SURFACE ELEVATION 584 88
DRILLER FOX DRILLING INC. DATE: START 9/21/89 FINISH 9/21/89

DEPTH	SAMPLE No.	SAMPLE TYPE	INTERVAL FROM	INTERVAL TO	BLOW COUNT 0" to 6"	BLOW COUNT 6" to 12"	BLOW COUNT 12" to 18"	REC (in)	USCS SOIL TYPE	WC (%)	qu (TSF)	LAYER DEPTH	SOIL DESCRIPTION AND REMARKS	PIEZO
5	1	SS	5.0	7.0	8	15	16	22	SP				Light Brown Fine To Medium Sand, Trace Of Silt.	
					15									
10														
15	2	SS	15.0	17.0	12	18	19	20	SP				Dark Brown Fine To Medium Sand, Some Silt.	
					15									
20														
25	3	SS	24.0	25.5	18	115	97	15	SP			25.0	Dark BrownTo Gray Fine To Medium Sand, Some Silt.	
	4	SS	25.5	27.0	3	19	22	18	GW			26.0	Dark Brown Fine To Coarse Sandy Gravel.	
									CL				Gray Silty Clay, Some Fine To Medium Sand.	
													Bottom Of Boring At 27.0 Ft.	
30													Notes:	
													1. Boring Was Advanced By Mud Rotary Drilling Using A 6-In. Diameter Tricone Roller Bit.	
													2. Ground Water Was Encountered At 3.5 Ft. Below Ground Surface During Drilling.	
													3. Upon Completion, Boring Was Backfilled With Cement/Bentonite Grout From 27.0 Ft. To Ground Surface.	

Rev. 8-88

BORING LOG

PROJECT No. 87-126-04
BORING No. S-92
LOGGED BY TCD
PAGE No. 1 of 1

PROJECT NAME WAUKEGAN HARBOR
BORING LOCATION N 4707.09 E 5247.95 SURFACE ELEVATION 584.29
DRILLER FOX DRILLING INC. DATE: START 9/20/89 FINISH 9/20/89

DEPTH	SAMPLE No.	SAMPLE TYPE	INTERVAL FROM	INTERVAL TO	BLOW COUNT 0"	BLOW COUNT 6"	BLOW COUNT 12"	REC (in)	USCS SOIL TYPE	WC (%)	qu (TSF)	LAYER DEPTH	SOIL DESCRIPTION AND REMARKS	PIEZO
					6"	12"	18"							
5	1	SS	5.0	7.0	6	16	16	24	SP				Dark Brown Fine To Medium Sand, Trace Of Silt.	
					16									
10														
15	2	SS	15.0	17.0	13	22	21	22	SP				Dark Brown Fine To Medium Sand, Some Silt.	
					21									
20														
25	3	SS	24.0	26.0	13	25	85	22	GW				Dark Brown Fine To Coarse Sandy Gravel.	
					87									
	4	SS	26.5	28.0	12	24	24	18	CL			26.5	Brown Silty Clay, Trace Of Fine Sand.	
30													Bottom Of Boring At 28.0 Ft.	

Notes:

1. Boring Was Advanced By Mud Rotary Drilling Using A 6-In. Diameter Tricone Roller Bit.
2. Ground Water Was Encountered At 3.0 Ft. Below Ground Surface During Drilling.
3. Upon Completion, Boring Was Backfilled With Cement/Bentonite Grout From 28.0 Ft. To Ground Surface.

Rev. 8-88

Canonie

BORING LOG

PROJECT No. 90-407
BORING No. S-101
LOGGED BY PRS
PAGE No. 1 of 1

PROJECT NAME Waukegan Harbor Remediation Project, Waukegan, Illinois
BORING LOCATION N 4,593.9 E 5,183.1 SURFACE ELEVATION 585.0
DRILLER Fox Drilling Inc. DATE: START 11/19/90 FINISH 11/19/90

DEPTH	SAMPLE No.	SAMPLE TYPE	INTERVAL FROM	INTERVAL TO	BLOW COUNT 0" 6"	BLOW COUNT 6" 12"	BLOW COUNT 12" 18"	REC (in)	USCS SOIL TYPE	WC (%)	qu (TSF)	LAYER DEPTH	SOIL DESCRIPTION AND REMARKS	PIEZO
5	1	SS	5.0	7.0	5	8	12	18	SP				Brown Fine to Medium Sand, Wet.	
					9									
10														
15	2	SS	15.0	17.0	13	22	33	18	SP				Dark Gray Fine to Medium Sand, Wet.	
					30									
20														
25												24.0		
	3	SS	24.0	26.0	13	22	22	18	SM				Dark Gray Silty Fine Sand, Wet. Slight Odor.	
					31							26.0		
													Bottom of Boring at 26.0 Ft.	

Notes:

1. Temporary 4-inch-diameter steel wash casing was driven to a depth of 7 feet.

2. Boring was advanced using mud rotary wash with 3-7/8-inch-diameter tricone roller bit.

3. Upon completion, borehole was backfilled with cement/bentonite grout mixture.

Rev. 8-88

Canonie

BORING LOG

PROJECT No. 90-407
BORING No. S-102
LOGGED BY PRS
PAGE No. 1 of 1

PROJECT NAME Waukegan Harbor Remediation Project, Waukegan, Illinois
BORING LOCATION N 4,593.9 E 5,283.1 SURFACE ELEVATION 585 0
DRILLER Fox Drilling Inc. DATE: START 11/19/90 FINISH 11/19/90

DEPTH	SAMPLE No.	SAMPLE TYPE	INTERVAL FROM	INTERVAL TO	BLOW COUNT 0" 6"	BLOW COUNT 6" 12"	BLOW COUNT 12" 18"	REC (in)	USCS SOIL TYPE	WC (%)	qu (TSF)	LAYER DEPTH	SOIL DESCRIPTION AND REMARKS	PIEZO
5	1	SS	5.0	7.0	3	9	13	18	SP				Brown Fine to Medium Sand, Wet.	
					16									
10														
15	2	SS	15.0	17.0	8	16	23	18	SP				Gray Fine to Medium Sand, Wet.	
					27									
20														
												24.0		
25	3	SS	24.0	26.0	19	22	29	18	SM				Dark Gray Silty Fine Sand, Wet. Odor.	
					46							26.0		
													Bottom of Boring at 26.0 Ft.	

Notes:

1. Temporary 4-inch-diameter steel wash casing was driven to a depth of 7 feet.

2. Boring was advanced using mud rotary wash with 3-7/8-inch-diameter tricone roller bit.

3. Upon completion, borehole was backfilled with cement/bentonite grout mixture.

Rev. 8-88

Canonie

BORING LOG

PROJECT No. 90-407
BORING No. S-103
LOGGED BY PRS
PAGE No. 1 of 1

PROJECT NAME Waukegan Harbor Remediation Project, Waukegan, Illinois
BORING LOCATION N 4,526.4 E 5,056.0 SURFACE ELEVATION 584.5
DRILLER Fox Drilling Inc. DATE: START 11/20/90 FINISH 11/20/90

DEPTH	SAMPLE No.	SAMPLE TYPE	INTERVAL FROM	INTERVAL TO	BLOW COUNT 0" 6"	BLOW COUNT 6" 12"	BLOW COUNT 12" 18"	REC (in)	USCS SOIL TYPE	WC (%)	qu (TSF)	LAYER DEPTH	SOIL DESCRIPTION AND REMARKS	PIEZO
5	1	SS	5.0	7.0	6	10	13	18	SP				Brown to Gray Fine to Medium Sand, Wet.	
					15							7.0		
	2	SS	7.0	9.0	6	9	14	24	SP				Dark Gray Fine to Medium Sand, Wet.	
					28									
10	3	SS	9.0	11.0	6	14	30	24	SP				Odor. Borehole OVA: 0-4 ppm.	
					37									
	4	SS	11.0	13.0	7	21	40	24	SP				Slight Odor.	
					47									
	5	SS	13.0	15.0	3	9	19	24	SP				Slight Odor.	
15					29							15.0		
													Bottom of Boring at 15.0 Ft.	
													Notes:	
													1. Temporary 4-inch-diameter steel wash casing was driven to a depth of 7 feet.	
													2. Boring was advanced using mud rotary wash with 3-7/8-inch-diameter tricone roller bit.	
													3. Upon completion, borehole was backfilled with cement/bentonite grout mixture.	

Rev. 8-88

Canonie

BORING LOG

PROJECT No. 90-407
BORING No. S-104
LOGGED BY PRS
PAGE No. 1 of 1

PROJECT NAME Waukegan Harbor Remediation Project, Waukegan, Illinois
BORING LOCATION N 4,502.9 E 5,070.3 SURFACE ELEVATION 584.5
DRILLER Fox Drilling Inc. DATE: START 11/20/90 FINISH 11/20/90

DEPTH	SAMPLE No.	SAMPLE TYPE	INTERVAL FROM	INTERVAL TO	BLOW COUNT 0"-6"	BLOW COUNT 6"-12"	BLOW COUNT 12"-18"	REC (in)	USCS SOIL TYPE	WC (%)	qu (TSF)	LAYER DEPTH	SOIL DESCRIPTION AND REMARKS	PIEZO
5	1	SS	5.0	7.0	2	4	9	24	SP			6.0	Brown to Gray Fine to Medium Sand, Wet.	
					13							7.0	Dark Gray Fine to Medium Sand, Wet. Odor and Oily Sheen.	
	2	SS	7.0	9.0	2	12	23	18	SP				Gray Fine to Medium Sand, Wet. Odor.	
					28								Slight Odor.	
10	3	SS	9.0	11.0	8	12	18	24	SP					
					17								Slight Odor. OVA: 1 ppm.	
	4	SS	11.0	13.0	6	16	27	24	SP					
					23								Slight Odor.	
	5	SS	13.0	15.0	7	13	30	24	SP					
15					23							15.0	Bottom of Boring at 15.0 Ft.	

Notes:

1. Temporary 4-inch-diameter steel wash casing was driven to a depth of 7 feet.

2. Boring was advanced using mud rotary wash with 3-7/8-inch-diameter tricone roller bit.

3. Upon completion, borehole was backfilled with cement/bentonite grout mixture.

Rev. 8-88

Canonie

BORING LOG

PROJECT No. 90-407
BORING No. S-105
LOGGED BY PRS
PAGE No. 1 of 1

PROJECT NAME Waukegan Harbor Remediation Project, Waukegan, Illinois
BORING LOCATION N 4,525.9 E 4,955.5 SURFACE ELEVATION 584.5
DRILLER Fox Drilling Inc. DATE: START 11/26/90 FINISH 11/26/90

DEPTH	SAMPLE No.	SAMPLE TYPE	INTERVAL FROM	INTERVAL TO	BLOW COUNT 0"-6"	BLOW COUNT 6"-12"	BLOW COUNT 12"-18"	REC (in)	USCS SOIL TYPE	WC (%)	qu (TSF)	LAYER DEPTH	SOIL DESCRIPTION AND REMARKS	PIEZO
5	1	SS	5.0	7.0	10	13	18	24	SP				Brown Fine to Medium Sand, Wet.	
					17									
	2	SS	7.0	9.0	3	9	18	24	SP				Gray Fine to Medium Sand, Wet.	
					22									
10	3	SS	9.0	11.0	3	8	16	15	SP				Dark Gray Fine to Medium Sand, Wet. Slight Odor.	
					20									
	4	SS	11.0	13.0	9	20	22	18	SP				Faint Odor.	
					27									
	5	SS	13.0	15.0	10	13	18	18	SP				Faint Odor.	
15					20									
20														
												24.0		
25	6	SS	24.0	26.0	12	20	35	18	SW			25.5	Dark Gray Fine to Coarse Sand, Wet.	
					37				CL			26.0	Brown Silty Clay, Trace Fine to Coarse Sand, Dry	
													Bottom of Boring at 26.0 Ft.	

Notes:

1. Temporary 4-inch-diameter steel wash casing was driven to a depth of 7 feet.

2. Boring was advanced using mud rotary wash with 3-7/8-inch-diameter tricone roller bit.

3. Upon completion, borehole was backfilled with cement/bentonite grout mixture.

Rev. 8-88

Canonie

BORING LOG

PROJECT No. 90-407
BORING No. S-106
LOGGED BY PRS
PAGE No. 1 of 1

PROJECT NAME Waukegan Harbor Remediation Project, Waukegan, Illinois
BORING LOCATION N 4,524.6 E 5,007.1 SURFACE ELEVATION 584.5
DRILLER Fox Drilling Inc. DATE: START 11/21/90 FINISH 11/21/90

DEPTH	SAMPLE No.	SAMPLE TYPE	SAMPLE INTERVAL FROM	SAMPLE INTERVAL TO	BLOW COUNT 0" 6"	BLOW COUNT 6" 12"	BLOW COUNT 12" 18"	REC (in)	USCS SOIL TYPE	WC (%)	qu (TSF)	LAYER DEPTH	SOIL DESCRIPTION AND REMARKS	PIEZO
5	1	SS	5.0	7.0	3	4	8	24	SP				Brown Fine to Medium Sand, Wet.	
					22							7.0		
	2	SS	7.0	9.0	3	8	13	18	SP				Gray Fine to Medium Sand, Wet.	
					23									
10	3	SS	9.0	11.0	9	14	41	18	SP				Slight Odor.	
					37									
	4	SS	11.0	13.0	13	22	30	15	SP				Slight Odor.	
					32									
	5	SS	13.0	15.0	13	32	37	18	SP					
15					41									
20														
												24.0	Gray Fine to Coarse Sand, Wet. Fine to Coarse	
25	6	SS	24.0	24.8	20	50/3"		9	SW			24.8	Gravel in Tip of Spoon.	
													Bottom of Boring at 24.8 Ft.	
													Notes:	
													1. Temporary 4-inch-diameter steel wash casing was driven to a depth of 7 feet.	
													2. Boring was advanced using mud rotary wash with 3-7/8-inch-diameter tricone roller bit.	
													3. Upon completion, borehole was backfilled with cement/bentonite grout mixture.	

Rev. 8-88

Canonie

BORING LOG

PROJECT No. 90-407
BORING No. S-107
LOGGED BY PRS
PAGE No. 1 of 1

PROJECT NAME Waukegan Harbor Remediation Project, Waukegan, Illinois
BORING LOCATION N 4,490.9 E 4,952.7 SURFACE ELEVATION 584.5
DRILLER Fox Drilling Inc. DATE: START 11/26/90 FINISH 11/26/90

DEPTH	SAMPLE No.	SAMPLE TYPE	INTERVAL FROM	INTERVAL TO	BLOW COUNT 0" 6" 6" 12"	BLOW COUNT 6" 12" 12" 18"	REC (in)	USCS SOIL TYPE	WC (%)	qu (TSF)	LAYER DEPTH	SOIL DESCRIPTION AND REMARKS	PIEZO
5													
	1	SS	5.0	7.0	7 9	13 15	24	SP				Dark Gray Fine to Medium Sand, Wet. Slight Odor	
	2	SS	7.0	9.0	2 4	9 13	18	SP				Slight Odor.	
10	3	SS	9.0	11.0	8 17	18 20	18	SP				Slight Odor.	
	4	SS	11.0	13.0	9 17	16 22	21	SP				Slight Odor.	
	5	SS	13.0	15.0	9 16	18 20	15	SP				No Odor.	
15													
20													
											24.0		
25	6	SS	24.0	26.0	21 38	29 4	21	SW CL			25.5 26.0	Dark Gray Fine to Coarse Sand, Wet. Brown Silty Clay, Trace Fine to Coarse Sand, Dry.	
												Bottom of Boring at 26.0 Ft.	

Notes:

1. Temporary 4-inch-diameter steel wash casing was driven to a depth of 7 feet.

2. Boring was advanced using mud rotary wash with 3-7/8-inch-diameter tricone roller bit.

3. Upon completion, borehole was backfilled with cement/bentonite grout mixture.

Rev. 8-88

Canonie

BORING LOG

PROJECT No. 90-407
BORING No. S-108
LOGGED BY PRS
PAGE No. 1 of 1

PROJECT NAME Waukegan Harbor Remediation Project, Waukegan, Illinois
BORING LOCATION N 4,495.3 E 5,018.3 SURFACE ELEVATION 584.5
DRILLER Fox Drilling Inc. DATE: START 11/21/90 FINISH 11/21/90

DEPTH	SAMPLE No	TYPE	INTERVAL FROM	INTERVAL TO	BLOW COUNT 0" 6"	BLOW COUNT 6" 12"	BLOW COUNT 12" 18"	REC (in)	USCS SOIL TYPE	WC (%)	qu (TSF)	LAYER DEPTH	SOIL DESCRIPTION AND REMARKS	PIEZO
5	1	SS	5.0	7.0	5	8	19	24	SP			6.0	Brown Fine to Medium Sand, Wet.	
					31								Gray Fine to Medium Sand, Wet.	
	2	SS	7.0	9.0	1	3	3	15	SP				Slight Odor.	
					7									
10	3	SS	9.0	11.0	10	26	38	18	SP				Slight Odor.	
					36									
	4	SS	11.0	13.0	14	28	31	18	SP				Faint Odor.	
					35									
	5	SS	13.0	15.0	19	34	37	18	SP				No Odor.	
15					38									
20														
25	6	SS	24.0	26.0	32	34	47	18	SP				Gray Fine to Medium Sand, Wet.	
					50							26.0		
													Bottom of Boring at 26.0 Ft.	

Notes:

1. Temporary 4-inch-diameter steel wash casing was driven to a depth of 7 feet.

2. Boring was advanced using mud rotary wash with 3-7/8-inch-diameter tricone roller bit.

3. Upon completion, borehole was backfilled with cement/bentonite grout mixture.

Rev. 8-88

Canonie

BORING LOG

PROJECT No. 90-407
BORING No. S-109
LOGGED BY PRS
PAGE No. 1 of 1

PROJECT NAME Waukegan Harbor Remediation Project, Waukegan, Illinois
BORING LOCATION N 4,262.4 E 5,155.3 SURFACE ELEVATION 585.0
DRILLER Fox Drilling Inc. DATE: START 11/19/90 FINISH 11/19/90

DEPTH	SAMPLE No.	SAMPLE TYPE	INTERVAL FROM	INTERVAL TO	BLOW COUNT 0" 6"	BLOW COUNT 6" 12"	BLOW COUNT 12" 18"	REC (in)	USCS SOIL TYPE	WC (%)	qu (TSF)	LAYER DEPTH	SOIL DESCRIPTION AND REMARKS	PIEZO
5	1	SS	5.0	7.0	3	6	11	18	SP				Brown Fine to Medium Sand, Moist to Wet.	
					8									
10														
15	2	SS	15.0	17.0	15	26	27	18	SP				Dark Gray Fine to Medium Sand, Wet. Slight Odor.	
					37									
20														
25	3	SS	24.0	26.0	21	37	31	18	SM			24.0	Dark Gray Silty Fine Sand, Wet. Odor. OVA: 1-2 ppm.	
					33							26.0	Bottom of Boring at 26.0 Ft.	

Notes:

1. Temporary 4-inch-diameter steel wash casing was driven to a depth of 7 feet.

2. Boring was advanced using mud rotary wash with 3-7/8-inch-diameter tricone roller bit.

3. Upon completion, borehole was backfilled with cement/bentonite grout mixture.

Rev. 8-88

Canonie

BORING LOG

PROJECT No. 90-407
BORING No. S-110
LOGGED BY PRS
PAGE No. 1 of 1

PROJECT NAME Waukegan Harbor Remediation Project, Waukegan, Illinois
BORING LOCATION N 4,291.1 E 5,023.9 SURFACE ELEVATION 585.5
DRILLER Fox Drilling Inc. DATE: START 11/19/90 FINISH 11/19/90

DEPTH	SAMPLE No.	SAMPLE TYPE	INTERVAL FROM	INTERVAL TO	BLOW COUNT 0" 6"	BLOW COUNT 6" 12"	BLOW COUNT 12" 18"	REC (in)	USCS SOIL TYPE	WC (%)	qu (TSF)	LAYER DEPTH	SOIL DESCRIPTION AND REMARKS	PIEZO
5	1	SS	5.0	7.0	3	8	12	18	SP				Brown to Gray Fine to Medium Sand, Wet.	
					13									
10														
15	2	SS	15.0	17.0	16	27	33	18	SP				Dark Gray Fine to Medium Sand, Wet.	
					42									
20														
												24.0	Dark Gray Silty Fine to Medium Sand, Trace of	
25	3	SS	24.0	25.8	10	16	30	15	SM			25.5	Clay, Wet. Odor.	
					50/4"				SW			25.8	Dark Gray Fine to Coarse Sand, Wet. Odor.	
													Bottom of Boring at 25.8 Ft.	

Notes:

1. Temporary 4-inch-diameter steel wash casing was driven to a depth of 7 feet.

2. Boring was advanced using mud rotary wash with 3-7/8-inch-diameter tricone roller bit.

3. Upon completion, borehole was backfilled with cement/bentonite grout mixture.

Rev. 8-88

Canonie

BORING LOG

PROJECT No. 90-407
BORING No. S-111
LOGGED BY PRS
PAGE No. 1 of 1

PROJECT NAME Waukegan Harbor Remediation Project, Waukegan, Illinois
BORING LOCATION N 4,113.5 E 5,062.3 SURFACE ELEVATION 586.8
DRILLER Fox Drilling Inc. DATE: START 11/20/90 FINISH 11/20/90

DEPTH	SAMPLE No	SAMPLE TYPE	INTERVAL FROM	INTERVAL TO	BLOW COUNT 0"-6"	BLOW COUNT 6"-12"	BLOW COUNT 12"-18"	REC (in)	USCS SOIL TYPE	WC (%)	qu (TSF)	LAYER DEPTH	SOIL DESCRIPTION AND REMARKS	PIEZO
5	1	SS	5.0	7.0	10	10	15	15	SP				Brown Fine to Medium Sand, Wet.	
					16									
10														
15	2	SS	15.0	17.0	5	19	29	18	SP				Brownish Gray Fine to Medium Sand, Wet.	
					29									
20														
												24.0		
25	3	SS	24 0	26.0	15	21	25	18	SM				Gray Silty Fine to Medium Sand, Wet.	
					26							26.0		
													Bottom of Boring at 26.0 Ft.	

Notes:

1. Temporary 4-inch-diameter steel wash casing was driven to a depth of 7 feet.

2. Boring was advanced using mud rotary wash with 3-7/8-inch-diameter tricone roller bit.

3. Upon completion, borehole was backfilled with cement/bentonite grout mixture.

Rev. 8-88

Canonie

BORING LOG

PROJECT No. 90-407
BORING No. S-112
LOGGED BY PRS
PAGE No. 1 of 1

PROJECT NAME Waukegan Harbor Remediation Project, Waukegan, Illinois
BORING LOCATION N 4,069.7 E 5,072.3 SURFACE ELEVATION 586.9
DRILLER Fox Drilling Inc. DATE: START 11/20/90 FINISH 11/20/90

DEPTH	SAMPLE No.	SAMPLE TYPE	INTERVAL FROM	INTERVAL TO	BLOW COUNT 0" 6"	BLOW COUNT 6" 12"	BLOW COUNT 12" 18"	REC (in)	USCS SOIL TYPE	WC (%)	qu (TSF)	LAYER DEPTH	SOIL DESCRIPTION AND REMARKS	PIEZO
5														
	1	SS	5.0	7.0	10	16	15	18	SP				Brown Fine to Medium Sand, Wet.	
					14									
10														
15														
	2	SS	15.0	17.0	14	26	22	18	SP				Gray Fine to Medium Sand, Wet.	
					26									
20														
												24.0		
25	3	SS	24.0	26.0	22	30	39	18	SP				Gray Fine Sand, Wet.	
					42							26.0		
													Bottom of Boring at 26.0 Ft.	

Notes:

1. Temporary 4-inch-diameter steel wash casing was driven to a depth of 7 feet.

2. Boring was advanced using mud rotary wash with 3-7/8-inch-diameter tricone roller bit.

3. Upon completion, borehole was backfilled with cement/bentonite grout mixture.

Rev. 8-88

Canonie

BORING LOG

PROJECT No. 90-407
BORING No. S-113
LOGGED BY PRS
PAGE No. 1 of 1

PROJECT NAME Waukegan Harbor Remediation Project, Waukegan, Illinois
BORING LOCATION N 4,324.6 E 5,155.3 SURFACE ELEVATION 585 5
DRILLER Fox Drilling Inc. DATE: START 11/16/90 FINISH 11/16/90

DEPTH	SAMPLE No	SAMPLE TYPE	INTERVAL FROM	INTERVAL TO	BLOW COUNT 0" 6" 12" / 6" 12" 18"	REC (in)	USCS SOIL TYPE	WC (%)	qu (TSF)	LAYER DEPTH	SOIL DESCRIPTION AND REMARKS	PIEZO
5												
	1	SS	5.0	7.0	8 8 9 / 16	24	SP			6.0	Brownish Gray Fine to Medium Sand, Wet.	
							SP				Dark Gray Fine to Medium Sand, Wet.	
10												
15												
	2	SS	15.0	17 0	13 18 20 / 25	18	SP				Dark Gray Fine to Medium Sand, Wet. Slight Odor.	
20												
25	3	SS	24.0	26.0	10 12 15 / 21	18	SM			25.5	Dark Gray Silty Fine Sand, Wet.	
							SW			26.0	Dark Gray Silty Fine to Coarse Sand, Wet.	
											Bottom of Boring at 26.0 Ft.	

Notes:

1. Temporary 4-inch-diameter steel wash casing was driven to a depth of 7 feet.

2. Boring was advanced using mud rotary wash with 3-7/8-inch-diameter tricone roller bit.

3. Upon completion, borehole was backfilled with cement/bentonite grout mixture.

Rev. 8-88

Canonie

BORING LOG

PROJECT No 90-407
BORING No. S-114
LOGGED BY PRS
PAGE No. 1 of 1

PROJECT NAME Waukegan Harbor Remediation Project, Waukegan, Illinois
BORING LOCATION N 4562.92 E 5358.29 SURFACE ELEVATION 584 5
DRILLER Fox Drilling Inc. DATE: START 1/3/91 FINISH 1/3/91

DEPTH	SAMPLE No	SAMPLE TYPE	INTERVAL FROM	INTERVAL TO	BLOW COUNT 0" 6"	BLOW COUNT 6" 12"	BLOW COUNT 12" 18"	REC (in)	USCS SOIL TYPE	WC (%)	qu (TSF)	LAYER DEPTH	SOIL DESCRIPTION AND REMARKS	PIEZO
5	1	SS	5.0	7.0	8 16	10	15	18	SP				Gray Fine to Medium Sand, Wet.	
10														
15	2	SS	15.0	17 0	9 24	13	21	21	SP				Dark Gray Fine to Medium Sand, Wet.	
20														
25	3	SS	25.0	27.0	9 15	9	10	21	SP				Dark Gray Fine to Medium Sand, Wet.	
30													Bottom of Boring at 27 0 Ft.	

Notes:

1. Boring was advanced using 4-1/4-in. hollow-stem augers.

2. Upon completion, borehole was backfilled with a cement/bentonite grout mixture.

Rev. 8-88

Canonie

BORING LOG

PROJECT No 90-407
BORING No S-115
LOGGED BY PRS
PAGE No. 1 of 1

PROJECT NAME Waukegan Harbor Remediation Project, Waukegan, Illinois
BORING LOCATION N 4701.74 E 5372.77 SURFACE ELEVATION 584 5
DRILLER Fox Drilling Inc. DATE: START 1/3/91 FINISH 1/3/91

DEPTH	SAMPLE No.	SAMPLE TYPE	INTERVAL FROM	INTERVAL TO	BLOW COUNT 0"-6"	BLOW COUNT 6"-12"	BLOW COUNT 12"-18"	REC (in)	USCS SOIL TYPE	WC (%)	qu (TSF)	LAYER DEPTH	SOIL DESCRIPTION AND REMARKS	PIEZO
5	1	SS	5.0	7.0	10	9	12	18	SP				Brown to Gray Fine to Medium Sand, Wet	
					17									
10														
15	2	SS	15.0	17 0	4	6	8	18	SP				Dark Gray Fine to Medium Sand, Wet	
					8									
20														
25	3	SS	25.0	27.0	8	9	21	24	SP				Dark Gray Fine to Medium Sand, Wet. Odor.	
					25									
30													Bottom of Boring at 27.0 Ft	

Notes:

1. Boring was advanced using 4-1/4-in. hollow-stem augers.

2. Upon completion, borehole was backfilled with a cement/bentonite grout mixture.

Rev. 8-88

Canonie

BORING LOG

PROJECT No 90-407
BORING No. S-116
LOGGED BY PRS
PAGE No. 1 of 1

PROJECT NAME Waukegan Harbor Remediation Project, Waukegan, Illinois
BORING LOCATION East of LMS In-Out Building SURFACE ELEVATION 584 5
DRILLER Fox Drilling Inc. DATE: START 1/4/91 FINISH 1/4/91

DEPTH	SAMPLE No.	SAMPLE TYPE	INTERVAL FROM	INTERVAL TO	BLOW COUNT 0" to 6"	BLOW COUNT 6" to 12"	BLOW COUNT 12" to 18"	REC (in)	USCS SOIL TYPE	WC (%)	qu (TSF)	LAYER DEPTH	SOIL DESCRIPTION AND REMARKS	PIEZO
5	1	SS	5.0	7 0	16	10	13	18	SP				Brown Fine to Medium Sand, Wet	
					15									
10														
15	2	SS	15.0	16.5	18	35	39	18	SP				Dark Gray Fine to Medium Sand, Wet	
20														
25	3	SS	25 0	26.5	13	16	21	15	SP				Dark Gray Fine to Medium Sand, Wet. Slight Odor.	
30													Bottom of Boring at 26.5 Ft.	

Notes:

1. Boring was advanced using 4-1/4-in. hollow-stem augers.

2. Upon completion, borehole was backfilled with a cement/bentonite grout mixture.

Canonie

BORING LOG

PROJECT No 90-407
BORING No. S-117
LOGGED BY PRS
PAGE No. 1 of 1

PROJECT NAME Waukegan Harbor Remediation Project, Waukegan, Illinois
BORING LOCATION East of LMS In-Out Building SURFACE ELEVATION 584 5
DRILLER Fox Drilling Inc. DATE: START 1/4/91 FINISH 1/4/91

DEPTH	SAMPLE No.	SAMPLE TYPE	SAMPLE INTERVAL FROM	SAMPLE INTERVAL TO	BLOW COUNT 0" to 6"	BLOW COUNT 6" to 12"	BLOW COUNT 12" to 18"	REC (in)	USCS SOIL TYPE	WC (%)	qu (TSF)	LAYER DEPTH	SOIL DESCRIPTION AND REMARKS	PIEZO
5	1	SS	5.0	7.0	8	11	16	15	SP				Brown Fine to Medium Sand, Wet.	
					17									
10														
15	2	SS	15.0	17 0	7	9	9	15	SP				Dark Gray Fine to Medium Sand, Wet Odor	
					14									
20														
25	3	SS	25.0	26.5	10	12	15	12	SP				Dark Gray Fine to Medium Sand, Wet Odor.	
30													Bottom of Boring at 26.5 Ft.	

Notes:

1. Boring was advanced using 4-1/4-in. hollow-stem augers.

2. Upon completion, borehole was backfilled with a cement/bentonite grout mixture.

Canonie

BORING LOG

PROJECT No. 90-407
BORING No. S-118
LOGGED BY PRS
PAGE No. 1 of 1

PROJECT NAME Waukegan Harbor Remediation Project, Waukegan, Illinois
BORING LOCATION N 4476.17 E 5049.88 SURFACE ELEVATION 584 8
DRILLER Fox Drilling Inc. DATE: START 1/23/91 FINISH 1/23/91

DEPTH	SAMPLE No	SAMPLE TYPE	INTERVAL FROM	INTERVAL TO	BLOW COUNT 0" 6"	BLOW COUNT 6" 12"	BLOW COUNT 12" 18"	REC (in)	USCS SOIL TYPE	WC (%)	qu (TSF)	LAYER DEPTH	SOIL DESCRIPTION AND REMARKS	PIEZO
5	1	SS	6.0	8.0	8	15	18	21	SP				Gray Fine to Medium Sand, Wet.	
					20									
	2	SS	8.0	10.0	2	6	11	24	SP				Odor and Oily Appearance in All Samples.	
10					14									
	3	SS	10.0	12.0	6	12	19	18	SP					
					13							12.0		
													Bottom of Boring at 12.0 Ft.	
15													Notes:	
													1. Boring was advanced using 4-1/4-in hollow-stem augers.	
													2. Upon completion, borehole caved in and remaining open space was backfilled with cuttings.	

Rev. 8-88

Canonie

BORING LOG

PROJECT No. 90-407
BORING No S-119
LOGGED BY PRS
PAGE No. 1 of 1

PROJECT NAME Waukegan Harbor Remediation Project, Waukegan, Illinois
BORING LOCATION N 4480.73 E 5078.59 SURFACE ELEVATION 584 78
DRILLER Fox Drilling Inc. DATE: START 1/23/91 FINISH 1/23/91

DEPTH	SAMPLE No.	SAMPLE TYPE	INTERVAL FROM	INTERVAL TO	BLOW COUNT 0" 6" 6"	BLOW COUNT 6" 12" 12"	BLOW COUNT 12" 18" 18"	REC (in)	USCS SOIL TYPE	WC (%)	qu (TSF)	LAYER DEPTH	SOIL DESCRIPTION AND REMARKS	PIEZO
5	1	SS	6.0	8.0	6 37	14	24	24	SP				Dark Gray Fine to Medium Sand, Wet.	
	2	SS	8.0	10.0	9 20	12	18	18	SP				Odor and Oily Appearance in Samples 2 and 3.	
10	3	SS	10.0	12.0	5 16	9	14	21	SP			12.0	Bottom of Boring at 12 0 Ft.	
15													Notes: 1. Boring was advanced using 4-1/4-in. hollow-stem augers. 2. Upon completion, borehole caved in and remaining open space was backfilled with cuttings.	

Rev. 8-88

Canonie

BORING LOG

PROJECT No. 90-407
BORING No. S-120
LOGGED BY PRS
PAGE No. 1 of 1

PROJECT NAME Waukegan Harbor Remediation Project, Waukegan, Illinois
BORING LOCATION N 4509.35 E 5046.22 SURFACE ELEVATION 584 73
DRILLER Fox Drilling Inc. DATE: START 1/23/91 FINISH 1/23/91

DEPTH	SAMPLE No	SAMPLE TYPE	SAMPLE INTERVAL FROM	SAMPLE INTERVAL TO	BLOW COUNT 0" 6"	BLOW COUNT 6" 12"	BLOW COUNT 12" 18"	REC (in)	USCS SOIL TYPE	WC (%)	qu (TSF)	LAYER DEPTH	SOIL DESCRIPTION AND REMARKS	PIEZO
5	1	SS	4.0	6.0	7	8	10	18	SP				Gray Fine to Medium Sand, Wet	
					13							6.0		
													Bottom of Boring at 6.0 Ft	
10													Notes:	
													1 Boring was advanced using 4-1/4-in. hollow-stem augers.	
													2 Upon completion, borehole caved in and remaining open space was backfilled with cuttings.	

Canonie

BORING LOG

PROJECT No. 90-407
BORING No. S-121
LOGGED BY PRS
PAGE No 1 of 1

PROJECT NAME Waukegan Harbor Remediation Project, Waukegan, Illinois
BORING LOCATION N 4511.43 E 5077.16 SURFACE ELEVATION 584 86
DRILLER Fox Drilling Inc. DATE: START 1/23/91 FINISH 1/23/91

DEPTH	SAMPLE No	SAMPLE TYPE	INTERVAL FROM	INTERVAL TO	BLOW COUNT 0" 6"	BLOW COUNT 6" 12"	BLOW COUNT 12" 18"	REC (in)	USCS SOIL TYPE	WC (%)	qu (TSF)	LAYER DEPTH	SOIL DESCRIPTION AND REMARKS	PIEZO
5	1	SS	4.0	6.0	7	8	7	18	SP				Gray Fine to Medium Sand, Wet.	
					7							6.0		
													Bottom of Boring at 6.0 Ft.	
10													Notes:	
													1. Boring was advanced using 4-1/4-in. hollow-stem augers.	
													2. Upon completion, borehole caved in and remaining open space was backfilled with cuttings.	

Rev. 8-88

Canonie

BORING LOG

PROJECT No 90-407
BORING No. S-122
LOGGED BY PRS
PAGE No. 1 of 1

PROJECT NAME Waukegan Harbor Remediation Project, Waukegan, Illinois
BORING LOCATION N 4528.33 E 5050.27 SURFACE ELEVATION 585 11
DRILLER Fox Drilling Inc. DATE: START 1/23/91 FINISH 1/23/91

DEPTH	SAMPLE No	SAMPLE TYPE	SAMPLE INTERVAL FROM	SAMPLE INTERVAL TO	BLOW COUNT 0" 6"	BLOW COUNT 6" 12"	BLOW COUNT 12" 18"	REC (in)	USCS SOIL TYPE	WC (%)	qu (TSF)	LAYER DEPTH	SOIL DESCRIPTION AND REMARKS	PIEZO
5	1	SS	4 0	6 0	3	6	8	18	SP				Brown Fine to Medium Sand, Wet.	
					9							6.0		
													Bottom of Boring at 6.0 Ft.	
													Notes:	
10													1. Boring was advanced using 4-1/4-in. hollow-stem augers.	
													2. Upon completion, borehole caved in and remaining open space was backfilled with cuttings.	

Rev. 8-88

Canonie

BORING LOG

PROJECT No. 90-407
BORING No S-123
LOGGED BY PRS
PAGE No. 1 of 1

PROJECT NAME Waukegan Harbor Remediation Project, Waukegan, Illinois
BORING LOCATION N 4526.84 E 5079.12 SURFACE ELEVATION 585 48
DRILLER Fox Drilling Inc. DATE: START 1/23/91 FINISH 1/23/91

DEPTH	SAMPLE No.	SAMPLE TYPE	INTERVAL FROM	INTERVAL TO	BLOW COUNT 0" 6"	BLOW COUNT 6" 12"	BLOW COUNT 12" 18"	REC (in)	USCS SOIL TYPE	WC (%)	qu (TSF)	LAYER DEPTH	SOIL DESCRIPTION AND REMARKS	PIEZO
5	1	SS	4.0	6.0	7	7	8	18	SP				Brown Fine to Medium Sand, Wet.	
					9							6.0		
													Bottom of Boring at 6.0 Ft.	
													Notes:	
10													1 Boring was advanced using 4-1/4-in hollow-stem augers.	
													2. Upon completion, borehole caved in and remaining open space was backfilled with cuttings.	

Rev. 8-88

Canonie

BORING LOG

PROJECT No 90-407
BORING No S-124
LOGGED BY PRS
PAGE No. 1 of 1

PROJECT NAME Waukegan Harbor Remediation Project, Waukegan, Illinois
BORING LOCATION N 4531.63 E 5104.13 SURFACE ELEVATION 585.34
DRILLER Fox Drilling Inc. DATE: START 1/23/91 FINISH 1/23/91

DEPTH	SAMPLE No	SAMPLE TYPE	SAMPLE INTERVAL FROM	SAMPLE INTERVAL TO	BLOW COUNT 0" 6" 6"	BLOW COUNT 6" 12" 12"	BLOW COUNT 12" 18"	REC (in)	USCS SOIL TYPE	WC (%)	qu (TSF)	LAYER DEPTH	SOIL DESCRIPTION AND REMARKS	PIEZO
5	1	SS	4.0	6.0	7	12	13	18	SP				Brown Fine to Medium Sand, Wet.	
					13							6.0		
10													*Bottom of Boring at 6.0 Ft.* Notes: 1. Boring was advanced using 4-1/4-in. hollow-stem augers. 2. Upon completion, borehole caved in and remaining open space was backfilled with cuttings.	

Canonie

BORING LOG

PROJECT No 90-407
BORING No. S-125
LOGGED BY PRS
PAGE No. 1 of 1

PROJECT NAME Waukegan Harbor Remediation Project, Waukegan, Illinois
BORING LOCATION N 4534 77 E 5121.04 SURFACE ELEVATION 585 3
DRILLER Fox Drilling Inc. DATE: START 1/23/91 FINISH 1/23/91

DEPTH	SAMPLE No.	SAMPLE TYPE	SAMPLE INTERVAL FROM	SAMPLE INTERVAL TO	BLOW COUNT 0" to 6"	BLOW COUNT 6" to 12"	BLOW COUNT 12" to 18"	REC (in)	USCS SOIL TYPE	WC (%)	qu (TSF)	LAYER DEPTH	SOIL DESCRIPTION AND REMARKS	PIEZO
5	1	SS	4 0	6.0	6	9	11	18	SP			6 0	Brown Fine to Medium Sand, Wet.	
					15								Bottom of Boring at 6.0 Ft.	
10													Notes:	
													1. Boring was advanced using 4-1/4-in hollow-stem augers.	
													2. Upon completion, borehole caved in and remaining open space was backfilled with cuttings.	

Rev. 8-88

Canonie

BORING LOG

PROJECT No 90-407
BORING No S-126
LOGGED BY PRS
PAGE No. 1 of 1

PROJECT NAME Waukegan Harbor Remediation Project, Waukegan, Illinois
BORING LOCATION N 4626.19 E 5384.30 SURFACE ELEVATION 585 33
DRILLER Fox Drilling Inc. DATE: START 1/24/91 FINISH 1/24/91

DEPTH	SAMPLE No.	SAMPLE TYPE	INTERVAL FROM	INTERVAL TO	BLOW COUNT 0" to 6"	BLOW COUNT 6" to 12"	BLOW COUNT 12" to 18"	REC (in).	USCS SOIL TYPE	WC (%)	qu (TSF)	LAYER DEPTH	SOIL DESCRIPTION AND REMARKS	PIEZO
5	1	SS	5.0	6.5	6	13	15	15	SP				Brown to Gray Fine to Medium Sand, Wet	
10														
15	2	SS	15 0	16.5	12	21	23	18	SP				Dark Gray Fine to Medium Sand, Wet.	
20														
25	3	SS	25.0	26.5				15	SP				Dark Gray Fine to Medium Sand, Wet	
30													Bottom of Boring at 26.5 Ft Notes: 1. Boring was advanced using 4-1/4-in. hollow-stem augers. 2. Upon completion, borehole was backfilled with a cement/bentonite grout mixture.	

Rev. 8-88

Canonie

BORING LOG

PROJECT No 90-407
BORING No. S-127
LOGGED BY PRS
PAGE No. 1 of 1

PROJECT NAME Waukegan Harbor Remediation Project, Waukegan, Illinois

BORING LOCATION N 4652.16 E 5328.54 SURFACE ELEVATION 584 85

DRILLER Fox Drilling Inc. DATE: START 1/24/91 FINISH 1/24/91

DEPTH	SAMPLE No	SAMPLE TYPE	INTERVAL FROM	INTERVAL TO	BLOW COUNT 0" 6"	BLOW COUNT 6" 12"	BLOW COUNT 12" 18"	REC (in)	USCS SOIL TYPE	WC (%)	qu (TSF)	LAYER DEPTH	SOIL DESCRIPTION AND REMARKS	PIEZO
5	1	SS	5.0	6.5	6	9	13	15	SP				Brown Fine to Medium Sand, Wet.	
10														
15	2	SS	15 0	16.5	11	9	13	18	SP				Dark Gray Fine to Medium Sand, Wet	
20														
25	3	SS	25 0	26 5	22	34	33	15	SP				Dark Gray Fine to Medium Sand, Wet	
30													Bottom of Boring at 26.5 Ft.	

Notes:

1. Boring was advanced using 4-1/4-in. hollow-stem augers.

2. Upon completion, borehole was backfilled with a cement/bentonite grout mixture

Canonie

BORING LOG

PROJECT No 90-407
BORING No. S-132
LOGGED BY PRS/WJC
PAGE No. 1 of 1

PROJECT NAME Waukegan Harbor Remediation Project, Waukegan, Illinois
BORING LOCATION N 4491.18 E 5079.59 SURFACE ELEVATION 584
DRILLER Exploration Technology Inc. DATE: START 2/26/91 FINISH 2/26/91

DEPTH	SAMPLE No.	SAMPLE TYPE	INTERVAL FROM	INTERVAL TO	BLOW COUNT 0" to 6"	BLOW COUNT 6" to 12"	BLOW COUNT 12" to 18"	REC (in)	USCS SOIL TYPE	WC (%)	qu (TSF)	LAYER DEPTH	SOIL DESCRIPTION AND REMARKS	PIEZO
5														
10														
15														
20	1	SS	18.0	20.0	11 29	11	17	21	SP					
	2	SS	21 0	23 0	19 28	15	17	24	SP				Gray Fine to Medium Sand, Wet.	
25	3	SS	24.0	26.0	15 22	19	23	21	SP					
30													Bottom of Boring at 26.0 Ft. Notes: 1. Boring was advanced using 6-1/4-in. hollow-stem augers. 2. Upon completion, borehole caved in and remaining open space was backfilled with cuttings.	

Rev. 8-88

Canonie

BORING LOG

PROJECT No 90-407
BORING No. S-133
LOGGED BY PRS
PAGE No. 1 of 1

PROJECT NAME Waukegan Harbor Remediation Project, Waukegan, Illinois
BORING LOCATION N 4478.56 E 5081.62 SURFACE ELEVATION 584
DRILLER Exploration Technology Inc. DATE: START 2/27/91 FINISH 2/27/91

DEPTH	SAMPLE No	SAMPLE TYPE	SAMPLE INTERVAL FROM	SAMPLE INTERVAL TO	BLOW COUNT 0" 6"	BLOW COUNT 6" 12"	BLOW COUNT 12" 18"	REC (in)	USCS SOIL TYPE	WC (%)	qu (TSF)	LAYER DEPTH	SOIL DESCRIPTION AND REMARKS	PIEZO
5														
10														
15														
20	1	SS	18.0	20.0	12 34	15	22	18	SP					
	2	SS	21.0	23.0	18 24	30	35	18	SP				Dark Gray Fine to Medium Sand, Wet.	
25	3	SS	24.0	26.0	19 46	32	50	18	SP					
30													Bottom of Boring at 26.0 Ft.	

Notes:

1. Boring was advanced using 6-1/4-in. hollow-stem augers.

2. Upon completion, borehole caved in and remaining open space was backfilled with cuttings.

Rev. 8-88

Canonie

BORING LOG

PROJECT No 90-407
BORING No. S-134
LOGGED BY WJC
PAGE No. 1 of 1

PROJECT NAME Waukegan Harbor Remediation Project, Waukegan, Illinois
BORING LOCATION N 4491.26 E 5105.25 SURFACE ELEVATION 584 5
DRILLER Exploration Technology Inc. DATE: START 2/27/91 FINISH 2/27/91

DEPTH	SAMPLE No.	SAMPLE TYPE	INTERVAL FROM	INTERVAL TO	BLOW COUNT 0" 6"	BLOW COUNT 6" 12"	BLOW COUNT 12" 18"	REC (in)	USCS SOIL TYPE	WC (%)	qu (TSF)	LAYER DEPTH	SOIL DESCRIPTION AND REMARKS	PIEZO
5														
10														
15														
20	1	SS	18.0	20.0	7	7	20	24	SP				Gray Fine to Medium Sand, Wet.	
					29									
	2	SS	21.0	22.3	22	30	50/4	16	SP					
25	3	SS	23 0	25.0	20	30	31	18	SP					
					20								Bottom of Boring at 25.0 Ft.	
30													Notes: 1. Boring was advanced using 6-1/4-in. hollow-stem augers. 2. Upon completion, borehole caved in and remaining open space was backfilled with cuttings.	

Rev. 8-88

Canonie

BORING LOG

PROJECT No 90-407
BORING No S-135
LOGGED BY WJC
PAGE No. 1 of 1

PROJECT NAME Waukegan Harbor Remediation Project, Waukegan, Illinois
BORING LOCATION N 4480 09 E 5100.56 SURFACE ELEVATION 584 5
DRILLER Exploration Technology Inc. DATE: START 2/27/91 FINISH 2/27/91

DEPTH	SAMPLE No	TYPE	INTERVAL FROM	INTERVAL TO	BLOW COUNT 0" 6" 6" 12"	BLOW COUNT 6" 12" 18"	REC (in)	USCS SOIL TYPE	WC (%)	qu (TSF)	LAYER DEPTH	SOIL DESCRIPTION AND REMARKS	PIEZO
5													
10													
15													
20	1	SS	18 0	20.0	8 50	10	25	21	SP				
	2	SS	21.0	22.3	38	28	50/4	16	SP			Gray Fine to Medium Sand, Wet	
25	3	SS	24 0	26.0	10 32	10	28	24	SP				
30												Bottom of Boring at 26.0 Ft.	

Notes·

1. Boring was advanced using 6-1/4-in. hollow-stem augers.

2 Upon completion, borehole caved in and remaining open space was backfilled with cuttings.

Rev. 8-88

Canonie

BORING LOG A-32

PROJECT No. 90-407
BORING No. S-136
LOGGED BY WJC
PAGE No. 1 of 1

PROJECT NAME Waukegan Harbor Remediation Project, Waukegan, Illinois

BORING LOCATION N 4519.69 E 5115.48 SURFACE ELEVATION 583 5

DRILLER Exploration Technology Inc. DATE: START 2/27/91 FINISH 2/27/91

DEPTH	SAMPLE No	SAMPLE TYPE	INTERVAL FROM	INTERVAL TO	BLOW COUNT 0" 6"	BLOW COUNT 6" 12"	BLOW COUNT 12" 18"	REC (in)	USCS SOIL TYPE	WC (%)	qu (TSF)	LAYER DEPTH	SOIL DESCRIPTION AND REMARKS	PIEZO
5	1	SS	5.0	7.0	15	9	6	12	SP				Black Fine to Medium Sand, Wet. Oily Sheen.	
					6							7.0		
	2	SS	7.0	9.0	10	17	27	16	SP					
					31								Gray Fine to Medium Sand, Wet.	
10	3	SS	9.0	10.5	5	11	22	20	SP					
					50/3							10.8	Bottom of Boring at 10.8 Ft.	
15													Notes: 1. Boring was advanced using 6-1/4-in hollow-stem augers. 2. Upon completion, borehole caved in and remaining open space was backfilled with cuttings.	

Rev. 8-88

Canonie

BORING LOG

PROJECT No. 90-407
BORING No. S-137
LOGGED BY WJC
PAGE No. 1 of 1

PROJECT NAME Waukegan Harbor Remediation Project, Waukegan, Illinois

BORING LOCATION N 4517.98 E 5094.55 SURFACE ELEVATION 583.5

DRILLER Exploration Technology Inc. DATE: START 2/27/91 FINISH 2/27/91

DEPTH	SAMPLE No	SAMPLE TYPE	INTERVAL FROM	INTERVAL TO	BLOW COUNT 0" 6" 12"	BLOW COUNT 6" 12" 18"	REC (in)	USCS SOIL TYPE	WC (%)	qu (TSF)	LAYER DEPTH	SOIL DESCRIPTION AND REMARKS	PIEZO
5	1	SS	5.0	7.0	12 14 20	24	19	SP				Black Fine to Medium Sand, Wet. Oily Sheen	
											7.0		
	2	SS	7.0	9.0	4 8 13	17	20	SP				Gray Fine to Medium Sand, Wet.	
10	3	SS	9.0	10.5	5 17 50		14	SP					
											10.5	Bottom of Boring at 10.5 Ft	
15												Notes:	
												1. Boring was advanced using 6-1/4-in. hollow-stem augers	
												2. Upon completion, borehole caved in and remaining open space was backfilled with cuttings.	

Rev. 8-88

Canonie

DRAFT

BORING LOG

PROJECT No. 87-126-01
BORING No. L-1
LOGGED BY P. Romzick
PAGE No. 1 of 4

PROJECT NAME WAUKEGAN HARBOR
BORING LOCATION N 5409.3094 E 3981.1724 SURFACE ELEVATION 584.65
DRILLER Fox Drilling, Inc. DATE: START 1/29/89 FINISH 1/31/89

DEPTH	SAMPLE No.	TYPE	INTERVAL FROM	INTERVAL TO	BLOW COUNT 0" 6"	BLOW COUNT 6" 12"	BLOW COUNT 12" 18"	REC (in)	USCS SOIL TYPE	WC (%)	qu (TSF)	LAYER DEPTH	SOIL DESCRIPTION AND REMARKS	PIEZO
5	1	SS	3.5	5.0	1	4	5	16	SP				Loose To Dense Brown Fine Sand. Trace Of Coarse Sand From 3.5 To 5 0 Ft.	
10	2	SS	8.5	10.0	4	12	21	24	SP				Trace Of Fine Gravel From 8.5 To 10.0 Ft.	
												13.5		
15	3	SS	13.5	15.0	21	31	27	18	SP				Very Dense Gray Fine Sand.	
												19.0	6-In. Layer Of Wood At 18.5 Ft.	
20	4	SS	18.5	20.0	16	27	67	14	CL/GP		>4.5	19.5	Coarse Gravel, Some Fine To Coarse Sand, Some Fine To Coarse Gravel.	
25	5	SS	23.5	24.8	35	75	100/4	16	CL		>4.5			
	6	PB	25.0	27.5				26	CL				Hard Gray Silty Clay.	
30	7	PB	27.5	30.0				31	CL					
35	8	SS	33.5	35.0	12	23	31	21	CL		>4.5			
40	9	SS	38.5	40.0	12	19	26	16	CL		>4.5			

Rev. 8-88

Canonie

DRAFT

BORING LOG

PROJECT No. 87-126-01
BORING No. L-1
LOGGED BY P. Romzick
PAGE No. 2 of 4

PROJECT NAME WAUKEGAN HARBOR
BORING LOCATION N 5409.3094 E 3981.1724 SURFACE ELEVATION 584.65
DRILLER Fox Drilling, Inc. DATE: START 1/29/89 FINISH 1/31/89

DEPTH	SAMPLE No.	SAMPLE TYPE	SAMPLE INTERVAL FROM	SAMPLE INTERVAL TO	BLOW COUNT 0" 6"	BLOW COUNT 6" 12"	BLOW COUNT 12" 18"	REC (In)	USCS SOIL TYPE	WC (%)	qu (TSF)	LAYER DEPTH	SOIL DESCRIPTION AND REMARKS	PIEZO
													(Cobble At 43.0 Ft.)	
45	10	SS	43.5	45.0	18	27	30	17	CL		>4.5			
50	11	SS	48.5	50.0	11	23	23	16	CL		>4.5		Cobble From 49.0 To 49.5 Ft.	
													Soft To Hard Gray Silty Clay.	
55	12	SS	53.5	55.0	9	15	24	18	CL		4.00			
60	13	SS	58.5	60.0	8	12	17	17	CL		3.50			
65	14	SS	63.5	65.0	11	18	27	16	CL		3.50			
70	15	SS	68.5	70.0	9	15	21	15	CL		2.50			
75	16	SS	73.5	75.0	9	12	17	14	CL		2.50			
80	17	SS	78.5	80.0	2	3	4	0						

Canonie

DRAFT

BORING LOG

PROJECT No. 87-126-01
BORING No. L-1
LOGGED BY P. Romzick
PAGE No. 3 of 4

PROJECT NAME WAUKEGAN HARBOR
BORING LOCATION N 5409.3094 E 3981.1724 SURFACE ELEVATION 584.65
DRILLER Fox Drilling, Inc. DATE: STAR 1/29/89 FINISH 1/31/89

DEPTH	SAMPLE No.	SAMPLE TYPE	INTERVAL FROM	INTERVAL TO	BLOW COUNT 0" 6"	BLOW COUNT 6" 12"	BLOW COUNT 12" 18"	REC (in)	USCS SOIL TYPE	WC (%)	qu (TSF)	LAYER DEPTH	SOIL DESCRIPTION AND REMARKS	PIEZO
85	18	SS	83.5	85.0	2	3	7	16	CL		0.50			
90	19	SS	87.5	90.0	3	6	9	24	CL		0.50			
95	20	SS	93.5	95.0	36	17	35	17	CL		3.00			
												96.9		
100													Limestone	
105													See Rock Log L-1 For Details.	
110														
115														
120														

Rev. 8-88

Canonie

DRAFT

ROCK CORE LOG

PROJECT No 87-126-01
BORING No. L-1
LOGGED BY P. Romzick
PAGE No. 4 of 4

PROJECT NAME WAUKEGAN HARBOR
BORING LOCATION N 5409.3094 E 3981.1724 SURFACE ELEVATION 584.65
DRILLER Fox Drilling, Inc. DATE: START 1/29/89 FINIS 1/31/89

DEPTH	CORE NO.	CORE LEN.	INTERVAL FROM	INTERVAL TO	BOX NO.	CORE DATA SIZE	CORE DATA PSI	CORE DATA FPM	CORE DATA % C.R.	CORE DATA LOSS	DISCONTINUITIES RQD	DISCONTINUITIES FPF	DISCONTINUITIES JOINT	STRENGTH TESTS Qu TSF	STRENGTH TESTS Is PSI	DESCRIPTION AND REMARKS	PIEZO
95																Contact Depth of 96.9 Ft.	
100																Very Hard Weathered Light Gray Massive Limestone.	
	1	10	98.5	108.5	3	NX	0	0.3	100								
105																	
110																	
	2	10	108.5	118.5	4	NX	0	0.3	100								
115																	
120																Bottom Of Boring At 118.5 Ft.	

Notes:
1. Boring Was Advanced To Limestone By Rotary Wash Method Using A 6-In.-Dia. Roller Bit.

2. Coring Was Advanced Using NX Core Barrel.

3. Ground Water Was Encountered At 4.0 Ft. Below Ground Surface.

4. Boring Was Converted To Piezometer L-1.

Rev. 6/89

Canonie

BORING LOG

PROJECT No. 87-126-01
BORING No. L-2A
LOGGED BY K. Chirbas
PAGE No. 1 of 2

PROJECT NAME WAUKEGAN HARBOR
BORING LOCATION N 5856.0412 E 6316.8671 SURFACE ELEVATION 583.15
DRILLER Fox Drilling, Inc. DATE: START 1/23/89 FINISH 1/25/89

DEPTH	SAMPLE No.	TYPE	INTERVAL FROM	INTERVAL TO	BLOW COUNT 0" 6" 6" 12"	BLOW COUNT 6" 12" 12" 18"	REC (in)	USCS SOIL TYPE	WC (%)	qu (TSF)	LAYER DEPTH	SOIL DESCRIPTION AND REMARKS	PIEZO
5	1	SS	3.5	5.0	12	14 17	18	SP				Dense Brown Fine Sand, Trace Of Coarse Sand From 8.5 To 10.0 Ft.	
10	2	SS	8.5	10.0	8	14 18	18	SP					
											13.5		
15	3	SS	13.5	15.0	11	12 8	12	SP				Medium Dense To Dense Gray Fine Sand.	
20	4	SS	18.5	20.0	15	20 18	15	SP					
25	5	SS	23.5	25.0	9	12 12	8	SP				2 In. Layer Of Fine Gravel At 29.6 Ft.	
								SP					
30	6	SS	28.5	30.0	9	30 27	18	CL		>4.5	29.7		
	7	PB	30.0	32.5			17	CL				Hard Gray Silty Clay, Some Fine To Coarse Sand From 38.5 To43.5 Ft.	
35	8	PB	32.5	35.0			13	CL					
40	9	SS	38.5	40.0	25	27 37	13	CL		>4.5			

Canonie

BORING LOG

PROJECT No. 87-126-01
BORING No. L-2A
LOGGED BY K. Chirbas
PAGE No. 2 of 2

PROJECT NAME WAUKEGAN HARBOR
BORING LOCATION N 5856.0412 E 6316.8671 SURFACE ELEVATION 583.15
DRILLER Fox Drilling, Inc. DATE: START 1/23/89 FINISH 1/25/89

DEPTH	SAMPLE No.	SAMPLE TYPE	INTERVAL FROM	INTERVAL TO	BLOW COUNT 0" 6"	BLOW COUNT 6" 12"	BLOW COUNT 12" 18"	REC (in)	USCS SOIL TYPE	WC (%)	qu (TSF)	LAYER DEPTH	SOIL DESCRIPTION AND REMARKS	PIEZO
45	10	SS	43.5	45.0	20	37	49	18	CL		>4.5			
50	11	SS	48.5	50.0	27	30	38	15	CL		>4.5		Hard Gray Silty Clay, Trace Of Fine Sand From 43.5 To 53.5 Ft.	
55	12	SS	53.5	54.8	37	50	52/3	15	CL		>4.5		Trace Of Fine To Coarse Sand From 53.5 To 65.0 Ft.	
60	13	SS	58.5	60.0	19	35	31	18	CL		>4.5			
65	14	SS	63.5	65.0	15	24	31	6	CL		4.25	65.0		
70													Bottom Of Boring At 65.0 Ft. Notes: 1. Boring Was Advanced By Rotary Wash Method Using A 6-in. Dia Roller Bit. 2. Ground Water Was Encountered At 4.0 Ft. Below Ground Surface. 3. Upon Completion, Boring WAs Backfilled With Cement / Bentonite Grout From 65.0 FT. To Ground Surface. 4. Aborted The Hole Because The 10-In. Dia Casing Hit Boulders, Could Not Seal The Casing Into Clay.	

Canonie

BORING LOG

PROJECT No. 87-126-01
BORING No. L-2B
LOGGED BY K.Chirbas
PAGE No. 1 of 4

PROJECT NAME WAUKEGAN HARBOR
BORING LOCATION N 5831.5994 E 6307.8750 SURFACE ELEVATION 583.44
DRILLER Fox Drilling, Inc. DATE: STAR 1/25/89 FINISH 1/27/89

DEPTH	SAMPLE No.	TYPE	INTERVAL FROM	INTERVAL TO	BLOW COUNT 0" 6"	BLOW COUNT 6" 12"	BLOW COUNT 12" 18"	REC (in)	USCS SOIL TYPE	WC (%)	qu (TSF)	LAYER DEPTH	SOIL DESCRIPTION AND REMARKS	PIEZO
5	1	SS	3.5	5.0	13	24	27	13	SP				Very Dense Mottled Gray Fine Sand. 2 In. Layer Of Fine To Coarse Sand At 4.0 Ft.	
												8.5		
10	2	SS	8.5	10.0	11	19	23	18	SP				Medium Dense To Dense Gary Fine Sand.	
15	3	SS	13.5	15.0	9	13	17	15	SP					
												18.5		
20	4	SS	18.5	20.0	14	19	21	15	SP				Dense Brown Fine Sand.	
25	5	SS	23.5	25.0	8	10	13	0						
30	6	SS	28.5	30.0	8	20	124	12	SP				Trace Of fine Gravel At 29.7 FT.	
												29.9		
35	7	SS	33.5	35.0	30	54	78	18	CL		>4.5		Hard Gray Silty Clay, Trace Fine To Coarse Sand, Fine Gravel.	
40	8	SS	38.5	40.0	27	34	57	6	CL		4.25			

Canonie

BORING LOG

PROJECT No. 87-126-01
BORING No. L-2B
LOGGED BY K. Chirbas
PAGE No. 2 of 4

PROJECT NAME WAUKEGAN HARBOR
BORING LOCATION N 5831.5994 E 6307.8750 SURFACE ELEVATION 583.44
DRILLER Fox Drilling, Inc. DATE: STAR 1/25/89 FINISH 1/27/89

DEPTH	SAMPLE No.	TYPE	INTERVAL FROM	INTERVAL TO	BLOW COUNT 0" 6"	BLOW COUNT 6" 12"	BLOW COUNT 12" 18"	REC (in)	USCS SOIL TYPE	WC (%)	qu (TSF)	LAYER DEPTH	SOIL DESCRIPTION AND REMARKS	PIEZO
													Stiff To Hard Gray Silty Clay.	
	9	SS	43.5	45.0	16	24	45	18	CL		>4.5			
													Trace Of Fine To Coarse Sand From 48.5 To 53.5 Ft.	
	10	SS	48.5	50.0	22	28	50	16	CL		>4.5			
													Some Fine To Coarse Sand From 53.5 To 58.5 Ft.	
	11	SS	53.5	55.0	16	43	46	18	CL		>4.5			
	12	SS	58.5	60.0	10	14	20	17	CL		2.75			
	13	SS	63.5	65.0	13	17	24	16	CL		3.50			
	14	SS	68.5	70.0	10	11	18	18	CL		2.00			
	15	SS	73.5	75.0	10	16	20	18	CL		2.25			
	16	SS	78.5	80.0	5	5	8	18	CL		1.00			

Canonie

BORING LOG

PROJECT No. 87-126-01
BORING No. L-2B
LOGGED BY K. Chirbas
PAGE No. 3 of 4

PROJECT NAME WAUKEGAN HARBOR
BORING LOCATION N 5831.5994 E 6307.8750 SURFACE ELEVATION 583.44
DRILLER Fox Drilling, Inc. DATE: STAR 1/25/89 FINISH 1/27/89

DEPTH	SAMPLE No.	TYPE	INTERVAL FROM	INTERVAL TO	BLOW COUNT 0" 6"	BLOW COUNT 6" 12"	BLOW COUNT 12" 18"	REC (in)	USCS SOIL TYPE	WC (%)	qu (TSF)	LAYER DEPTH	SOIL DESCRIPTION AND REMARKS	PIEZO
	17	SS	83.5	85.0	9	7	8	18	CL		1.00		Stiff Gray Clay.	
	18	SS	88.5	90.0	7	11	16	18	CL		1.50	93.5		
	19	SS	93.5	95.0	8	14	20	15	CL		1.50		Soft To Hard Gray Silty Clay, Trace Of Fine To Coarse Sand From 93.5 To 103.5 Ft.	
	20	SS	98.5	100.0	12	26	36	0						
	21	SS	103.5	105.0	9	14	16	12	CL		0.25		Some Fine To Coarse Sand And Fine Gravel From 108.5 To 112.9 Ft.	
	22	SS	108.5	110.0	48	61	59	10	CL		>4.5	112.9		
								120					Limestone See Rock Coring Log L-2B for Details.	

Rev. 8-88

Canonie

ROCK CORE LOG

PROJECT No 87-126-01
BORING No. L-2B
LOGGED BY P. Romzick
PAGE No. 4 of 4

PROJECT NAME WAUKEGAN HARBOR
BORING LOCATION N 5831.5994 E 6307.8750 SURFACE ELEVATION 583.44
DRILLER Fox Drilling, Inc. DATE: START 1/25/89 FINIS 1/27/89

DEPTH	CORE NO.	CORE LEN.	INTERVAL FROM	INTERVAL TO	BOX NO.	CORE DATA SIZE	CORE DATA PSI	CORE DATA FPM	CORE DATA % C.R.	LOSS	DISCONTINUITIES RQD	DISCONTINUITIES FPF	DISCONTINUITIES JOINT	STRENGTH TESTS Qu TSF	STRENGTH TESTS Is PSI	DESCRIPTION AND REMARKS	PIEZO
110																	
																Contact Depth At 112.9 Ft.	
115																	
	1	10	113.5	123.5	1	NX	0	0.3	100		100	0.9					
120																Very Hard Light Gray Massive Limestone.	
125																	
	2	10	123.5	133.5	2	NX	0	0.3	100		98	0.8					
130																	
																Bottom Of Boring At 133.5 Ft.	
135																	

Notes:
1. Boring Was Advanced To Limestone By Rotary Wash Method Using A 6-In.-Dia. Roller Bit.

2. Coring Was Advanced Using NX Core Barrel.

3. Ground Water Was Encountered At 4.0 Ft. Below Ground Surface.

4. Boring Was Converted To Piezometer L-2B.

Rev. 6/89

Warzyn Soil Coring Log

WARZYN ENGINEERING INC

LOG OF TEST BORING

Project: Subsurface Investigation
Outboard Marine Corporation
Location: Waukegan, Illinois

Boring No. SC-1
Surface Elevation
Job No. C 9177
Sheet 1 of 1

1409 EMIL STREET • P.O. BOX 9538, MADISON, WIS 53715 • TEL. (608) 257-4848

SAMPLE						VISUAL CLASSIFICATION and Remarks	SOIL PROPERTIES				
Recovery			Moisture								
No.	Type	↓	↓	N	Depth		q_u	W	LL	PL	D
1&2	SS	X	W	-		Black Very Fine to Fine SAND, Some to Little Silt and Clay, Trace Organic Material					
3&4	SS	X	W	-							
5&6	SS	X	W	-							
7&8	SS	X	W	-							
9&10	SS	X	W	-							
11&12	SS	X	W	-	5						
						End Boring at 6'					
					10						
					15						
					20						
					25						
					30						
					35						
					40						

WATER LEVEL OBSERVATIONS

While Drilling: 12" Above
Upon Completion of Drilling:
Time After Drilling:
Depth to Water:
Depth to Cave In:

GENERAL NOTES

Start 5/27/80 Complete 5/27/80
Crew Chief St. Dennis Rig 750
Drilling Method
Continuous Split Spoon Sample

1

WARZYN ENGINEERING INC

LOG OF TEST BORING

Project: Subsurface Investigation
Outboard Marine Corporation
Location: Waukegan, Illinois

Boring No. SC-2
Surface Elevation
Job No. C 9177
Sheet 1 of 1

1409 EMIL STREET • P.O. BOX 9538, MADISON, WIS. 53715 • TEL. (608) 257-4848

SAMPLE						VISUAL CLASSIFICATION and Remarks	SOIL PROPERTIES				
Recovery			Moisture								
No	Type	↓	↓	N	Depth		q_u	W	LL	PL	D
1/2			W			Black Very Fine to Fine SAND, Some to Little Silt and Clay, Trace Organic Material					
3/4			W								
5/6			W								
7/8			W								
9/10			W		5						
11			W								
						End Boring at 6'					
					10	Pushed 2" ID Stainless Steel Pipe to take Samples					
					15						
					20						
					25						
					30						
					35						
					40						

WATER LEVEL OBSERVATIONS

While Drilling
Upon Completion of Drilling
Time After Drilling
Depth to Water
Depth to Cave In

GENERAL NOTES

Start 5/28/80 Complete 5/28/80
Crew Chief St. Dennis Rig 7"
Drilling Method

WARZYN ENGINEERING INC

LOG OF TEST BORING

Project: Subsurface Investigation
Outboard Marine Corporation
Location: Waukegan, Illinois

Boring No: SC-3
Surface Elevation:
Job No: C 9177
Sheet: 1 of 1

1409 EMIL STREET • P.O. BOX 9538, MADISON, WIS 53715 • TEL. (608) 257-4848

SAMPLE						VISUAL CLASSIFICATION and Remarks	SOIL PROPERTIES				
Recovery			Moisture								
No.	Type	↓	↓	N	Depth		Qu	W	LL	PL	D
1/2			W			Black Very Fine to Fine SAND, Some to Little Silt and Clay, Some Organic Material					
3/4			W								
5/6			W								
7/8			W								
9/10			W								
11/12			W		5						
						End Boring at 6'					
					10	Note: Sample 1 Split into Samples 1A & 1B					
						Pushed Stainless Steel 2" ID Pipe to Take Samples					
					15						
					20						
					25						
					30						
					35						
					40						

WATER LEVEL OBSERVATIONS

While Drilling: 30" Above
Upon Completion of Drilling:
Time After Drilling:
Depth to Water:
Depth to Cave In:

GENERAL NOTES

Start: 5/27/80 Complete: 5/27/80
Crew Chief: St. Dennis Rig: 750
Drilling Method:

WARZYN ENGINEERING INC

LOG OF TEST BORING

Project: Subsurface Investigation
Outboard Marine Corporation
Location: Waukegan, Illinois

Boring No. SC-4
Surface Elevation
Job No. C 9177
Sheet 1 of 1

1409 EMIL STREET • P.O. BOX 9538, MADISON, WIS 53715 • TEL. (608) 257-4848

SAMPLE No	Type	Recovery	Moisture	N	Depth	VISUAL CLASSIFICATION and Remarks	SOIL PROPERTIES Qu	W	LL	PL	D
1/2			W			*					
3/4/5			W			Black Fine to Medium SAND, Some to Little Silt and Clay, Trace Gravel & Organic Material					
6/7			W								
8/9			W								
10/11			W		5						
12/13			W			Gray Very Fine SAND Some Organic Material					
						End Boring at 6'					
						* Black Very Fine SAND, Some Silt, Some to Little Organic Material					
					10	Note 3" Gap 6" to 9"					
						Pushed Stainless Steel 2" ID Pipe to Take Samples					
					15						
					20						
					25						
					30						
					35						
					40						

WATER LEVEL OBSERVATIONS

While Drilling: 9" Above
Upon Completion of Drilling:
Time After Drilling
Depth to Water
Depth to Cave In

GENERAL NOTES

Start 5/27/80 Complete 5/27/80
Crew Chief St. Dennis Rig 75
Drilling Method

ZYN

.RING INC

LOG OF TEST BORING

Project: Subsurface Investigation
Outboard Marine Corporation
Location: Waukegan, Illinois

Boring No: SC-5
Surface Elevation:
Job No: C 9177
Sheet: 1 of 1

1409 EMIL STREET • P.O. BOX 9538, MADISON, WIS. 53715 • TEL. (608) 257-4848

SAMPLE: Recovery	SAMPLE: Moisture	SAMPLE: N	SAMPLE: Depth	VISUAL CLASSIFICATION and Remarks	SOIL PROPERTIES: Qu	W	LL	PL	D
	W			Black Very Fine SAND, Some Silt and Clay Some to Little Organic Material					
	W								
	W								
	W								
	W			Black Fine to Medium SAND, Some to Little Silt and Clay, Trace Gravel & Organic Material					
	W		5						
				End Boring at 6'					
			10						
				Pushed Stainless Steel 2" ID Pipe to Take Samples					
			15						
			20						
			25						
			30						
			35						
			40						

WATER LEVEL OBSERVATIONS

While Drilling: 18" Above
Upon Completion of Drilling:
Time After Drilling:
to Water:

GENERAL NOTES

Start: 5/27/80 Complete: 5/27/80
Crew Chief: St. Dennis Rig: 750
Drilling Method:

WARZYN
ENGINEERING INC
1409 EMIL STREET · P.O. BOX 9538, MADISON, WIS 53715 · TEL. (608) 257-4848

LOG OF TEST BORING

Project: Subsurface Investigation
Outboard Marine Corporation
Location: Waukegan, Illinois

Boring No: SC-6
Surface Elevation:
Job No.: C 9177
Sheet 1 of 1

SAMPLE No.	Type	Recovery	Moisture	N	Depth	VISUAL CLASSIFICATION and Remarks	Qu	W	LL	PL	D
1/2			W			Black Very Fine to Fine SAND, Some Silt & Organic Material					
3/4			W			Gray Fine to Medium SAND, Trace Organic Material, Some Silt and Clay					
5/6			W								
7/8			W			Gray Fine to Medium SAND, Trace Silt and Clay					
9/10			W								
11/12			W		5						
						End Boring at 6'					
					10	Pushed Stainless Steel 2" ID Pipe to Take Samples					
					15						
					20						
					25						
					30						
					35						
					40						

WATER LEVEL OBSERVATIONS

While Drilling: 8" Above
Upon Completion of Drilling:
Time After Drilling:
Depth to Water:
Depth to Cave In:

GENERAL NOTES

Start 5/27/80 Complete 5/27/80
Crew Chief St. Dennis Rig 750
Drilling Method

WARZYN ENGINEERING INC

LOG OF TEST BORING

Project: Subsurface Investigation
Outboard Marine Corporation
Location: Waukegan, Illinois

Boring No. SC-7
Surface Elevation
Job No. C 9177
Sheet 1 of 1

1409 EMIL STREET • P.O. BOX 9538, MADISON, WIS 53715 • TEL. (608) 257-4848

SAMPLE No.	Type	Recovery	Moisture	N	Depth	VISUAL CLASSIFICATION and Remarks	SOIL PROPERTIES qu	W	LL	PL	D
1			W			Very Loose Black MUCK, Some Sand					
2/3			W								
4/5			W								
6/7			W			Dark Gray Very Fine to Medium SAND, Trace Organic Material and Silt and Clay					
8/9			W		5						
10/11			W			End Boring at 6'					
					10						
						Pushed Stainless Steel 2" ID Pipe to Take Samples					
					15						
					20						
					25						
					30						
					35						
					40						

WATER LEVEL OBSERVATIONS

While Drilling 23" Above
Upon Completion of Drilling
Time After Drilling
Depth to Water
Depth to Cave In

GENERAL NOTES

Start 5/29/80 Complete 5/29/80
Crew Chief St. Dennis Rig Tripod
Drilling Method

WARZYN ENGINEERING INC

LOG OF TEST BORING

Project: Subsurface Investigation
Outboard Marine Corporation
Location: Waukegan, Illinois

Boring No. SC-8
Surface Elevation
Job No. C 9177
Sheet 1 of 1

1409 EMIL STREET • P.O. BOX 9538, MADISON, WIS. 53715 • TEL. (608) 257-4848

SAMPLE No.	Type	Recovery	Moisture	N	Depth	VISUAL CLASSIFICATION and Remarks	SOIL PROPERTIES qu	W	LL	PL	D
1/2			W			Black Very Fine to Medium SAND, Trace Organic Material, Trace Fine to Coarse Gravel					
3/4			W								
5/6			W								
7/8			W								
9/10			W								
11/12			W		5						
						End Boring at 6'					
					10	Pushed Stainless Steel 2" ID Pipe to Take Samples					
					15						
					20						
					25						
					30						
					35						
					40						

WATER LEVEL OBSERVATIONS

While Drilling 5' Above
Upon Completion of Drilling
Time After Drilling
Depth to Water
Depth to Cave In

GENERAL NOTES

Start 5/28/80 Complete 5/28/80
St: Dennis
Crew Chief ..... Rig Tripo
Drilling Method .....

WARZYN ENGINEERING INC

LOG OF TEST BORING

Project: Subsurface Investigation
Outboard Marine Corporation
Location: Waukegan, Illinois

Boring No. SC-9
Surface Elevation
Job No. C 9177
Sheet 1 of 1

1409 EMIL STREET • P.O. BOX 9538, MADISON, WIS. 53715 • TEL. (608) 257-4848

SAMPLE No.	Type	Recovery	Moisture	N	Depth	VISUAL CLASSIFICATION and Remarks	SOIL PROPERTIES qu	W	LL	PL	D
1			W			Very Loose Black MUCK					
2			W			Void WATER					
3			W			Gray Very Fine to Medium SAND, Little to Trace Silt and Clay, Trace Organic Material					
4			W								
5/6			W		5						
7/8			W								
						End Boring at 6'					
					10						
						Pushed Stainless Steel 2" ID Pipe to Take Samples					
					15						
					20						
					25						
					30						
					35						
					40						

WATER LEVEL OBSERVATIONS

While Drilling: 20" Above
Upon Completion of Drilling:
Time After Drilling:
Depth to Water:
Depth to Cave In:

GENERAL NOTES

Start 5/29/80 Complete 5/29/80
Crew Chief St. Dennis Rig Tripod
Drilling Method:

WARZYN ENGINEERING INC

LOG OF TEST BORING

Project: Subsurface Investigation
Outboard Marine Corporation
Location: Waukegan, Illinois

Boring No. SC-10
Surface Elevation
Job No. C 9177
Sheet 1 of 1

1409 EMIL STREET • P.O. BOX 9538, MADISON, WIS. 53715 • TEL. (608) 257-4848

SAMPLE No.	Type	Recovery	Moisture	N	Depth	VISUAL CLASSIFICATION and Remarks	SOIL PROPERTIES Qu	W	LL	PL	D
1/2/3			W			Very Loose Black MUCK					
4			W			Gray Very Fine to Medium SAND, Some to Trace Silt and Clay					
5/6			W								
7/8			W								
9/10			W		5						
11/12			W								
						End Boring at 6'					
					10						
						Note: Sample #1;2, & 3 Water from Top of Muck					
					15						
						Pushed Stainless Steel 2" ID Pipe to Take Samples					
					20						
					25						
					30						
					35						
					40						

WATER LEVEL OBSERVATIONS

While Drilling 50" Above
Upon Completion of Drilling
Time After Drilling
Depth to Water
Depth to Cave In

GENERAL NOTES

Start 5/29/80 Complete 5/29/8
Crew Chief St. Dennis Rig T 1
Drilling Method

WARZYN ENGINEERING INC

LOG OF TEST BORING

Project: Subsurface Investigation
Outboard Marine Corporation
Location: Waukegan, Illinois

Boring No: SC-11B
Surface Elevation:
Job No: C 9177
Sheet: 1 of 1

1409 EMIL STREET · P.O. BOX 9538, MADISON, WIS 53715 · TEL. (608) 257-4848

SAMPLE No.	Type	Recovery	Moisture	N	Depth	VISUAL CLASSIFICATION and Remarks	Qu	W	LL	PL	D
1/2			W			6" Very Loose Black MUCK					
						Water with Suspended SAND, Water Black					
3/4/5			W								
6/7			W								
8/9			W			Gray Very Fine to Medium SAND, Little to Trace Silt and Clay					
10/11			W		5						
12/13			W			End Boring at 6'					
						Pushed Stainless Steel 2" ID Pipe to Take Samples					
					10						
						Note: SC-11A was attempted, however sample recovery was unacceptable					
					15						
					20						
					25						
					30						
					35						
					40						

WATER LEVEL OBSERVATIONS

While Drilling: 48" Above
Upon Completion of Drilling:
Time After Drilling:
Depth to Water:
Depth to Cave In:

GENERAL NOTES

Start: 5/28/80 Complete: 5/28/80
Crew Chief: St. Dennis Rig: Tripod
Drilling Method:

8

WARZYN ENGINEERING INC

LOG OF TEST BORING

Project: Subsurface Investigation
Outboard Marine Corporation
Location: Waukegan, Illinois

Boring No: SC-12
Surface Elevation:
Job No: C 9177
Sheet: 1 of 1

1409 EMIL STREET • P.O. BOX 9538, MADISON, WIS. 53715 • TEL. (608) 257-4848

SAMPLE						VISUAL CLASSIFICATION and Remarks	SOIL PROPERTIES				
Recovery			Moisture								
No	Type	↓	↓	N	Depth		q_u	W	LL	PL	D
1/2			W			*					
3/4			W			3" Layer COBBLES					
5/6			W		5	Gray Very Fine to Medium SAND					
7/8			W								
						End Boring at 6'					
					10	Pushed Stainless Steel 2" ID Pipe to Take Samples					
						2 attempts were made to obtain samples 1st attempt failed due to pushing cobble					
					15						
						* Very Loose Black MUCK, Little to Trace Sand					
					20						
					25						
					30						
					35						
					40						

WATER LEVEL OBSERVATIONS

While Drilling: 30" Above
Upon Completion of Drilling:
Time After Drilling:
Depth to Water:
Depth to Cave In:

GENERAL NOTES

Started: 5/29/80 Completed: 5/29/80
Crew Chief: St. Dennis Rig: Tr
Drilling Method:

WARZYN ENGINEERING INC

LOG OF TEST BORING

Project: Subsurface Investigation
Outboard Marine Corporation
Location: Waukegan, Illinois

Boring No: SC-13
Surface Elevation:
Job No.: C 9177
Sheet: 1 of 1

1409 EMIL STREET • P.O. BOX 9538, MADISON, WIS 53715 • TEL. (608) 257-4848

SAMPLE						VISUAL CLASSIFICATION and Remarks	SOIL PROPERTIES				
Recovery			Moisture				q_u	W	LL	PL	D
No	Type	↓	↓	N	Depth						
1/2			W			Very Loose Black MUCK, Some to Little Sand					
3/4			W								
5/6			W			Black Very Fine to Medium SAND, Little to Trace Silt and Clay, Layers of Water					
7/8			W								
9/10			W		5						
11/12			W								
						End Boring at 6'					
					10	Pushed Stainless Steel 2" ID Pipe to Take Samples					
					15						
					20						
					25						
					30						
					35						
					40						

WATER LEVEL OBSERVATIONS

While Drilling: 6" Above
Upon Completion of Drilling:
Time After Drilling:
Depth to Water:
Depth to Cave In:

GENERAL NOTES

Start: 5/28/80 Complete: 5/28/80
Crew Chief: St. Dennis Rig: 750
Drilling Method:

WARZYN ENGINEERING INC

LOG OF TEST BORING

Project: Subsurface Investigation
Outboard Marine Corporation
Location: Waukegan, Illinois

Boring No. SC-14
Surface Elevation
Job No. C 9177
Sheet 1 of 1

1409 EMIL STREET • P.O. BOX 9538, MADISON, WIS. 53715 • TEL (608) 257-4848

SAMPLE						VISUAL CLASSIFICATION and Remarks	SOIL PROPERTIES				
Recovery			Moisture								
No	Type	↓	↓	N	Depth		q_u	W	LL	PL	D
1/2/3			W								
4/5			W			Black MUCK, Some to Little Silt, Sand and Clay					
6/7			W								
8/9						Dark Gray Very Fine to Medium SAND, Trace Silt					
10/11			W		5						
12/13			W								
						End Boring at 6'					
					10	Pushed Stainless Steel 2" ID Pipe to Take Samples					
					15						
					20						
					25						
					30						
					35						
					40						

WATER LEVEL OBSERVATIONS

While Drilling 14" Above
Upon Completion of Drilling
Time After Drilling
Depth to Water
Depth to Cave In

GENERAL NOTES

Start 5/28/80 Complete 5/28/80
St. Dennis
Crew Chief ..... Rig 750
Drilling Method .....

WARZYN ENGINEERING INC

LOG OF TEST BORING

Project: Subsurface Investigation
Outboard Marine Corporation
Location: Waukegan, Illinois

Boring No: SC-15
Surface Elevation:
Job No: C 9177
Sheet: 1 of 1

1409 EMIL STREET • P.O BOX 9538, MADISON, WIS 53715 • TEL. (608) 257-4848

SAMPLE No	Type	Recovery	Moisture	N	Depth	VISUAL CLASSIFICATION and Remarks
1/2/3			W			Black MUCK, Little to Trace Sand
4/5			W			Black Very Fine to Medium SAND, Some to Little Silt & Clay, Trace Organic Material
6/7			W			
8/9			W			
10/11			W		5	Dark Gray Very Fine to Medium SAND, Trace to Little Silt and Clay
12/13			W			End Boring at 6'
					10	Pushed Stainless Steel 2" ID Pipe to Take Samples
					15	
					20	
					25	
					30	
					35	
					40	

SOIL PROPERTIES				
Qu	W	LL	PL	D

WATER LEVEL OBSERVATIONS

While Drilling: 42" Above
Upon Completion of Drilling:
Time After Drilling:
Depth to Water:
Depth to Cave In:

GENERAL NOTES

Start: 5/28/80 Complete: 5/28/80
Crew Chief: St. Dennis Rig: 750
Drilling Method:

WARZYN ENGINEERING INC

LOG OF TEST BORING

Project: Subsurface Investigation
Outboard Marine Corporation
Location: Waukegan, Illinois

Boring No. SC-16
Surface Elevation
Job No. C 9177
Sheet 1 of 1

1409 EMIL STREET • P.O. BOX 9538. MADISON, WIS. 53715 • TEL. (608) 257-4848

SAMPLE						VISUAL CLASSIFICATION and Remarks	SOIL PROPERTIES				
Recovery			Moisture								
No	Type	↓	↓	N	Depth		q_u	W	LL	PL	D
1/2			W			Very Loose Black MUCK, Little to Trace Sand					
3/4			W			Loose Dark Gray Very Fine to Medium SAND, Trace Organic Material, Silt & Clay					
5/6			W								
7/8			W								
9/10			W			Gray Very Fine to Medium SAND, Trace Silt and Clay					
11/12			W		5						
						End Boring at 6'					
						Pushed Stainless Steel 2" ID Pipe to Obtain Samples					
					10						
					15						
					20						
					25						
					30						
					35						
					40						

WATER LEVEL OBSERVATIONS

While Drilling 19" Above
Upon Completion of Drilling
Time After Drilling
Depth to Water
Depth to Cave In

GENERAL NOTES

Start 5/29/80 Complete 5/29/80
Crew Chief St. Dennis Rig 750
Drilling Method

WARZYN ENGINEERING INC

LOG OF TEST BORING

Project: Subsurface Investigation
Outboard Marine Corporation
Location: Waukegan, Illinois

Boring No: SC-17
Surface Elevation:
Job No: C 9177
Sheet: 1 of 1

1409 EMIL STREET • P.O. BOX 9538, MADISON, WIS 53715 • TEL. (608) 257-4848

SAMPLE						VISUAL CLASSIFICATION and Remarks	SOIL PROPERTIES				
Recovery			Moisture								
No.	Type	↓	↓	N	Depth		q_u	W	LL	PL	D
1/2/3			W			Very Loose Black MUCK, Little to Trace Sand					
4/5/6			W								
7/8/9			W			Dark Gray Very Fine to Medium SAND, Trace Silt and Clay					
10/11			W								
12/13			W		5						
14/15			W								
						End Boring at 6'					
					10						
						Pushed Stainless Steel 2" ID Pipe to Obtain Sample					
					15						
					20						
					25						
					30						
					35						
					40						

WATER LEVEL OBSERVATIONS

While Drilling: 14" Above
Upon Completion of Drilling:
Time After Drilling:
Depth to Water:
Depth to Cave In:

GENERAL NOTES

Start: 5/29/80 Complete: 5/29/80
Crew Chief: St. Dennis Rig: 750
Drilling Method:

WARZYN ENGINEERING INC

LOG OF TEST BORING

Project: Subsurface Investigation
Outboard Marine Corporation
Location: Waukegan, Illinois

Boring No: SC-18
Surface Elevation:
Job No.: C 9177
Sheet: 1 of 1

1409 EMIL STREET · P.O. BOX 9538, MADISON, WIS 53715 · TEL. (608) 257-4848

SAMPLE						VISUAL CLASSIFICATION and Remarks	SOIL PROPERTIES				
Recovery			Moisture								
No	Type	↓	↓	N	Depth		Qu	W	LL	PL	D
1/2			W			Very Loose Black MUCK, Trace to Little Sand					
3			W								
4/5/6			W								
7/8/9/10/11			W			Dark Gray Very Fine to Medium SAND, Trace to Little Silt and Clay					
12/13/14			W		5						
						End Boring at 6'					
					10	Pushed Stainless Steel 2" ID Pipe to Obtain Samples					
						Note: Sample #1,2 & 3 each about 8" others are 4" to 6"					
					15						
					20						
					25						
					30						
					35						
					40						

WATER LEVEL OBSERVATIONS

While Drilling: 13" Above
Upon Completion of Drilling:
Time After Drilling:
Depth to Water:
Depth to Cave In:

GENERAL NOTES

Start: 5/28/80 Complete: 5/28/80
Crew Chief: St. Dennis Rig: 7
Drilling Method:

NARZYN ENGINEERING INC

LOG OF TEST BORING

Project: Subsurface Investigation
Outboard Marine Corporation
Location: Waukegan, Illinois

Boring No: SC-19
Surface Elevation:
Job No: C 9177
Sheet: 1 of 1

1409 EMIL STREET • P.O. BOX 9536, MADISON, WIS. 53715 • TEL. (608) 257-4848

SAMPLE						VISUAL CLASSIFICATION and Remarks	SOIL PROPERTIES				
Recovery			Moisture								
No.	Type	↓	↓	N	Depth		Qu	W	LL	PL	D
2/3			W			Very Loose Black MUCK, Trace Sand Water with Suspended SILT & SAND					
4/5			W								
6/7			W								
8/9			W								
0/11			W			Black Very Fine to Medium SAND, Trace to Little Silt and Clay					
2/13			W		5						
						End Boring at 6'					
					10						
						Pushed Stainless Steel 2" ID Pipe to Obtain Samples					
					15						
					20						
					25						
					30						
					35						
					40						

WATER LEVEL OBSERVATIONS

While Drilling: 34" Above
Upon Completion of Drilling:
Time After Drilling:
Depth to Water:
Depth to Cave In:

GENERAL NOTES

Start: 5/28/80 Complete: 5/28/80
Crew Chief: St. Dennis Rig: 750
Drilling Method:

JARZYN ENGINEERING INC

LOG OF TEST BORING

Project ..... Subsurface Investigation
Outboard Marine Corporation
Location ..... Waukegan, Illinois

Boring No SC-20
Surface Elevation .....
Job No. ..... C 9177
Sheet ..... 1 ..... of 1

1409 EMIL STREET • P.O. BOX 9538, MADISON, WIS 53715 • TEL. (608) 257-4848

SAMPLE					VISUAL CLASSIFICATION and Remarks	SOIL PROPERTIES				
Recovery		Moisture								
	Type			N	Depth		qu	W	LL	PL	D
3			W			*					
5			W			Loose Black Very Fine to Fine SAND, Trace Organic Material, Trace Silt and Clay					
7			W								
9			W								
11			W		5						
13			W			End Boring at 6'					
					10						
						* Black MUCK, Some to Little Silt and Clay, Trace Sand					
					15	Pushed Stainless Steel 2" ID Pipe to Obtain Samples					
					20						
					25						
					30						
					35						
					40						

WATER LEVEL OBSERVATIONS

While Drilling 9" Above
Upon Completion of Drilling
Time After Drilling
Depth to Water
Depth to Cave In

GENERAL NOTES

Start 5/28/80 Complete 5/28/80
St. Dennis
Crew Chief ..... Rig .....
Drilling Method .....

WELL DETAIL INFORMATION SHEET

in JRB Report, 95
WI (1/17/94
JAB o- BAR

JOB NO. 8342

BORING NO. 1

DATE 7/18/79

CHIEF Jim Grieger

LOCATION OMC-Waukegan, Illinois

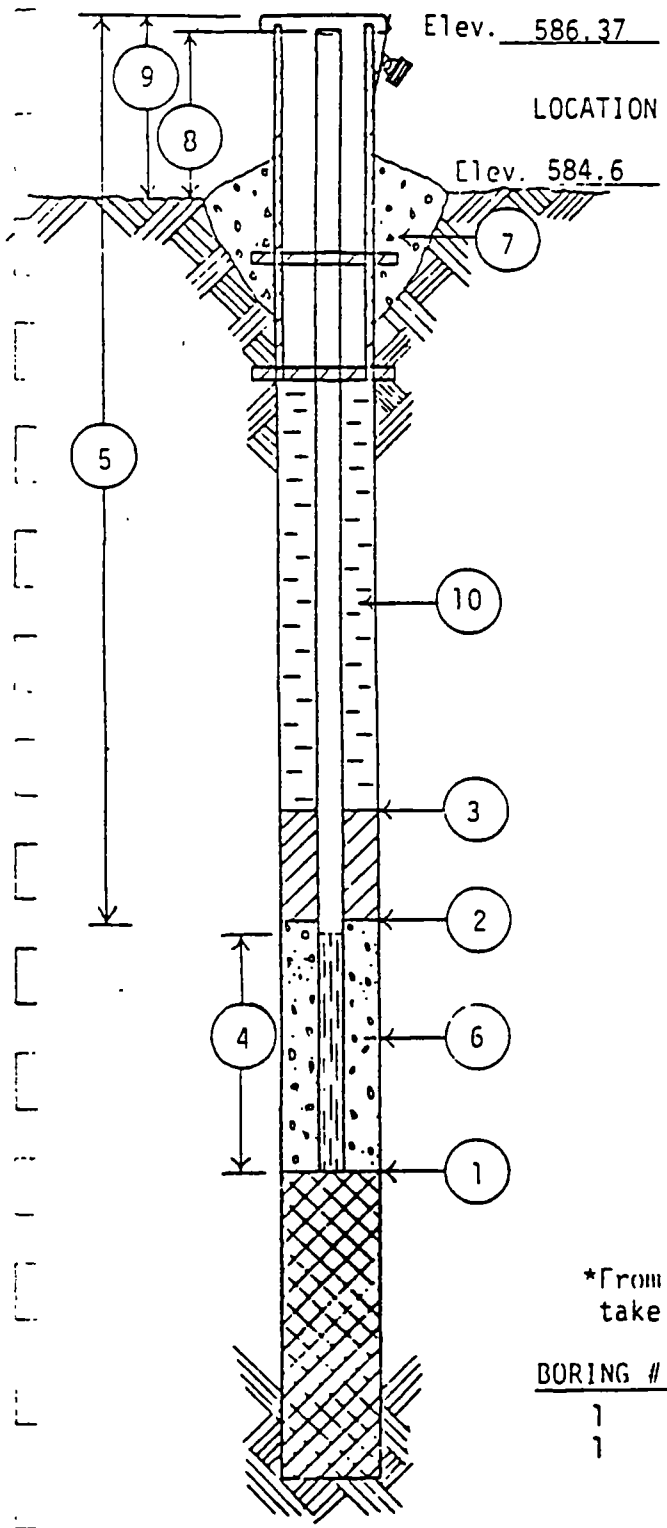

All depth measurements of well detail assumed to be from ground surface unless otherwise indicated.

1. DEPTH TO BOTTOM OF WELL POINT OR SLOTTED PIPE 8.7 FEET.
2. DEPTH OF BOTTOM OF SEAL (if installed) - FEET.
3. DEPTH TO TOP OF SEAL (if installed) - FEET.
4. LENGTH OF WELL POINT, PVC WELL SCREEN, OR SLOTTED PIPE 5.5 FEET. (Circle One)
5. TOTAL LENGTH OF PIPE 5 FEET @ 1¼ IN. DIAMETER.
6. TYPE OF FILTER MATERIAL AROUND WELL POINT OR SLOTTED PIPE Flint Sand.
7. CONCRETE CAP, YES NO (Circle One)
8. HEIGHT OF WELL CASING ABOVE GROUND 1.8 FEET.
9. PROTECTIVE CASING? YES NO (Circle One) HEIGHT ABOVE GROUND 3.1 Ft.
10. LOCKING CAP? YES NO (Circle One) TYPE OF BACKFILL: Flint Sand

WATER LEVEL CHECKS

*From top of casing, if protective casing higher, take measurement from top of protective casing.

BORING #	DATE	TIME	DEPTH TO WATER	REMARKS
1	7/19/79		5.66	
1	7/20/79		5.75	

WARZYN ENGINEERING INC.

JRB report (1981)
W2A (1/17/92 JAB & BAH

JOB NO. 8342

BORING NO. 2A

DATE 7/19/79

CHIEF Jim Grieger

LOCATION OMC-Waukegan, Illinois

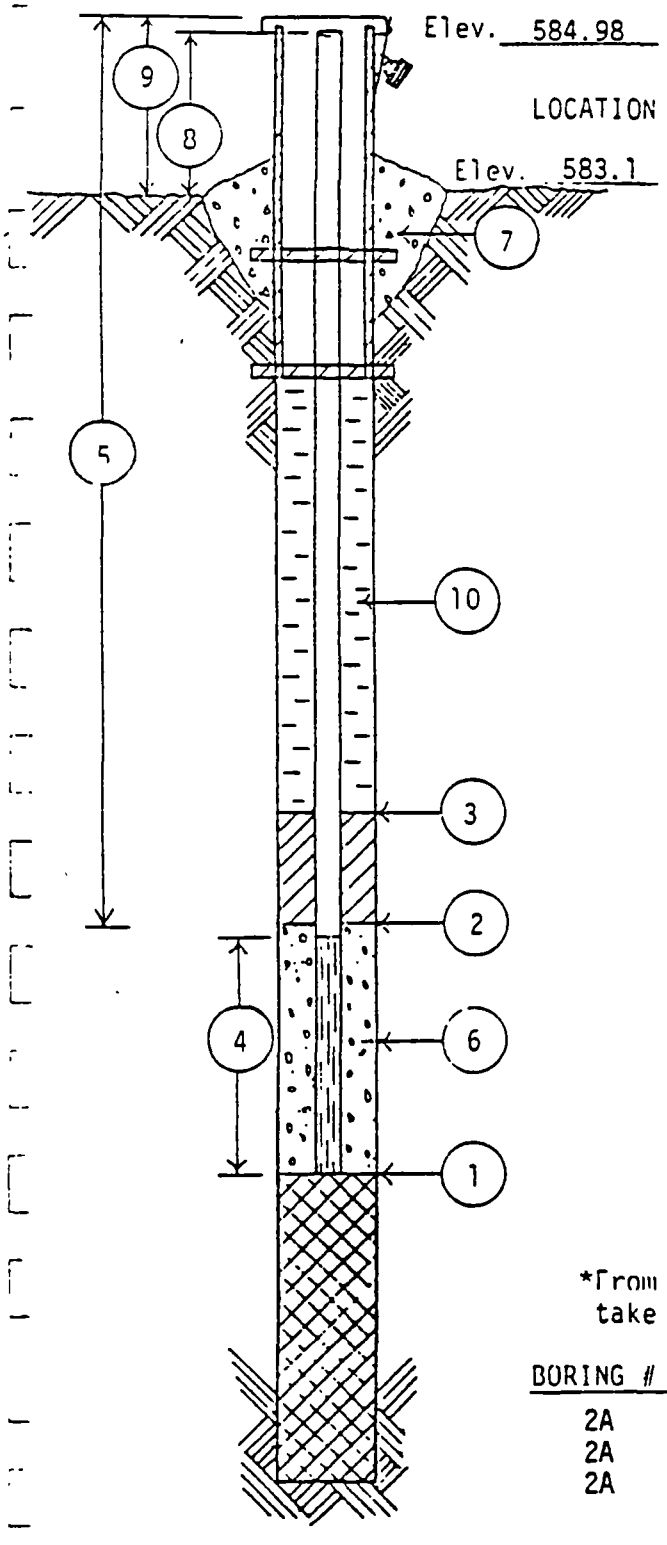

All depth measurements of well detail assumed to be from ground surface unless otherwise indicated.

1. DEPTH TO BOTTOM OF WELL POINT OR SLOTTED PIPE 8.6 FEET.
2. DEPTH OF BOTTOM OF SEAL (if installed) - FEET.
3. DEPTH TO TOP OF SEAL (if installed) - FEET.
4. LENGTH OF WELL POINT, PVC WELL SCREEN, OR SLOTTED PIPE 5.5 FEET. (Circle One)
5. TOTAL LENGTH OF PIPE 5 FEET @ 1¼ IN. DIAMETER.
6. TYPE OF FILTER MATERIAL AROUND WELL POINT OR SLOTTED PIPE Flint Sand.
7. CONCRETE CAP, YES NO (Circle One)
8. HEIGHT OF WELL CASING ABOVE GROUND 1.9 FEET.
9. PROTECTIVE CASING? YES NO (Circle One) HEIGHT ABOVE GROUND 2.2.
10. LOCKING CAP? YES NO (Circle One) TYPE OF BACKFILL: Flint Sand

WATER LEVEL CHECKS

*From top of casing, if protective casing higher, take measurement from top of protective casing.

BORING #	DATE	TIME	DEPTH TO WATER	REMARKS
2A	7/19/79		3.83	
2A	7/20/79		3.82	
2A	7/24/79		3.80	

WARZY ENGINEERING

WELL DETAIL INFORMATION SHEET

Name referred to in JRC Report (1981) - W2B (1/17/94, JAE of Ea...

JOB NO. 8342

BORING NO. 2B

DATE 7/20/79

CHIEF Jim Grieger

LOCATION OMC-Waukegan, Illinois

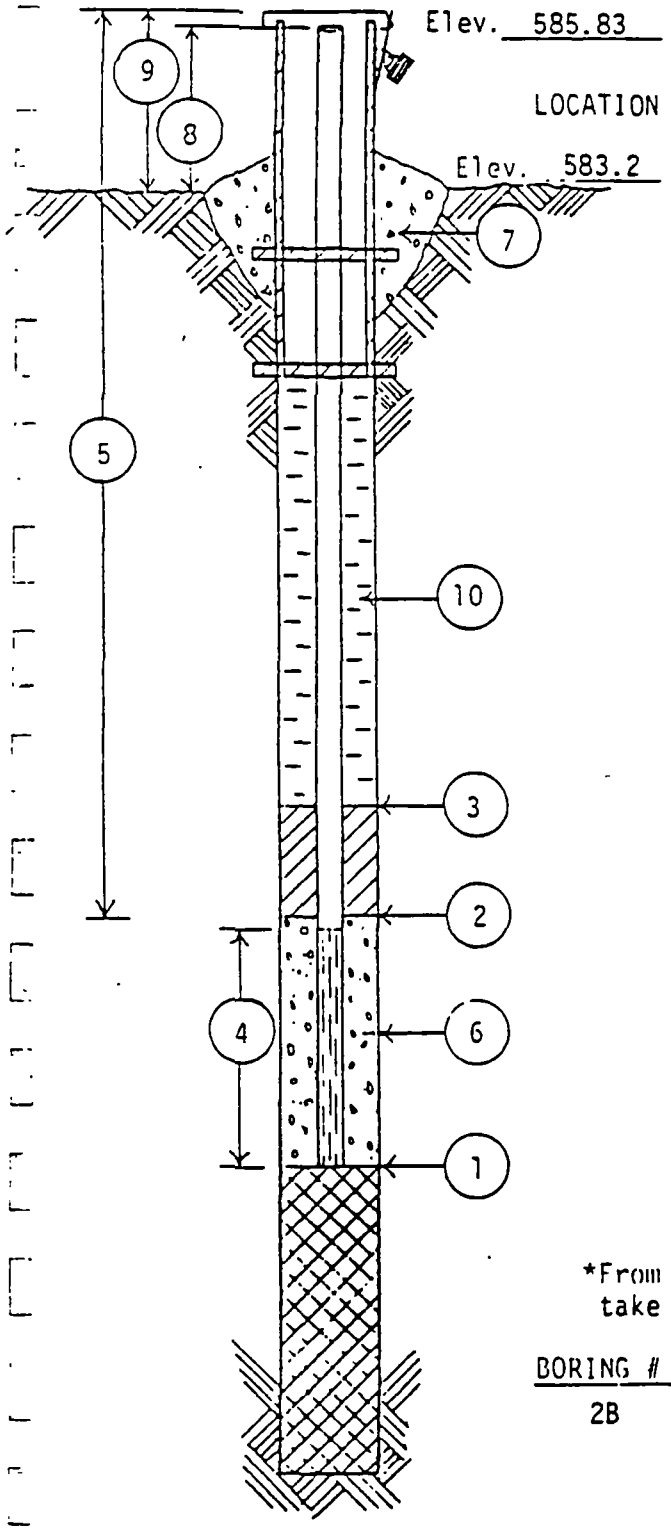

All depth measurements of well detail assumed to be from ground surface unless otherwise indicated.

1. DEPTH TO BOTTOM OF WELL POINT OR SLOTTED PIPE 19.9 FEET.
2. DEPTH OF BOTTOM OF SEAL (if installed) 17 FEET.
3. DEPTH TO TOP OF SEAL (if installed) 14 FEET.
4. LENGTH OF WELL POINT, PVC WELL SCREEN, OR SLOTTED PIPE 2.5 FEET. (Circle One)
5. TOTAL LENGTH OF PIPE 20 FEET @ 1¼ IN. DIAMETER.
6. TYPE OF FILTER MATERIAL AROUND WELL POINT OR SLOTTED PIPE Flint Sand.
7. CONCRETE CAP, YES NO (Circle One)
8. HEIGHT OF WELL CASING ABOVE GROUND 2.6 FEET.
9. PROTECTIVE CASING? YES NO (Circle One) HEIGHT ABOVE GROUND 2.8.
10. LOCKING CAP? YES NO (Circle One) TYPE OF BACKFILL: Flint Sand & Cave-in

WATER LEVEL CHECKS

*From top of casing, if protective casing higher, take measurement from top of protective casing.

BORING #	DATE	TIME	DEPTH TO WATER	REMARKS
2B	7/24/79		4.45	

WARZYN ENGINEERING INC

WELL DETAIL INFORMATION SHEET

NAME lectered to [illegible] JRB Report (1981) - W2C (1/17/94 JAE of Bar[illegible])

JOB NO. 8342

BORING NO. 2C

DATE 7/19/79

CHIEF Jim Grieger

LOCATION OME-Waukegan, Illinois

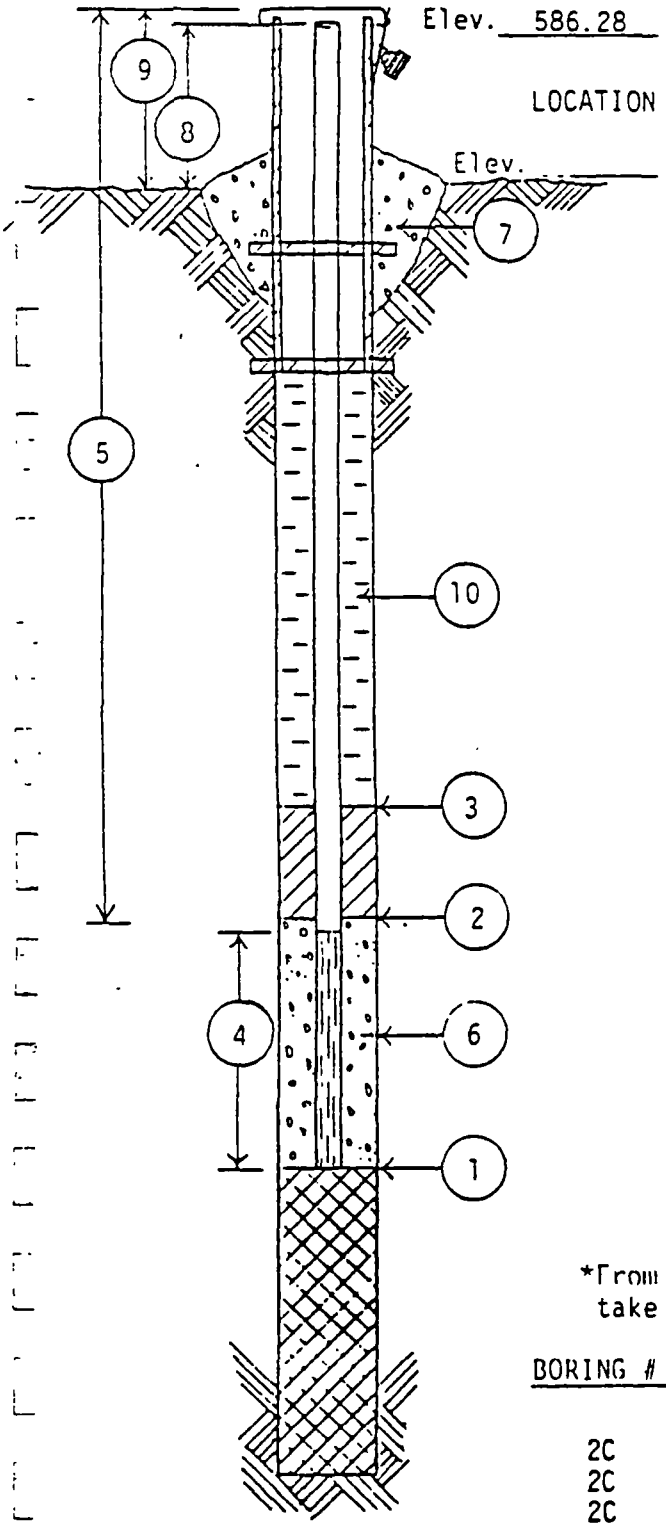

All depth measurements of well detail assumed to be from ground surface unless otherwise indicated.

1. DEPTH TO BOTTOM OF WELL POINT OR SLOTTED PIPE 31.8 FEET.
2. DEPTH OF BOTTOM OF SEAL (if installed) 27 FEET.
3. DEPTH TO TOP OF SEAL (if installed) 24 FEET.
4. LENGTH OF WELL POINT, PVC WELL SCREEN, OR SLOTTED PIPE 2.5 FEET. (Circle One)
5. TOTAL LENGTH OF PIPE 32.5 FEET @ 1¼ IN. DIAMETER.
6. TYPE OF FILTER MATERIAL AROUND WELL POINT OR SLOTTED PIPE Flint Sand.
7. CONCRETE CAP, YES NO (Circle One)
8. HEIGHT OF WELL CASING ABOVE GROUND 3.2 FEET.
9. PROTECTIVE CASING? YES NO (Circle One) HEIGHT ABOVE GROUND 3.4.
10. LOCKING CAP? YES NO (Circle One) TYPE OF BACKFILL: Flint Sand & Cave-in

WATER LEVEL CHECKS

*From top of casing, if protective casing higher, take measurement from top of protective casing.

BORING #	DATE	TIME	DEPTH TO WATER	REMARKS
2C	7/19/79		6.20	
2C	7/20/79		5.82	
2C	7/24/79		4.92	

WARZY ENGINEERING INC.

WELL DETAIL INFORMATION SHEET

Name referred to in JRB Report (1981) - W3 (1/17/94 JAB of BARR)

JOB NO. 8342

BORING NO. 3

DATE 7/23/79

CHIEF Jim Grieger

LOCATION OMC-Waukegan, Illinois

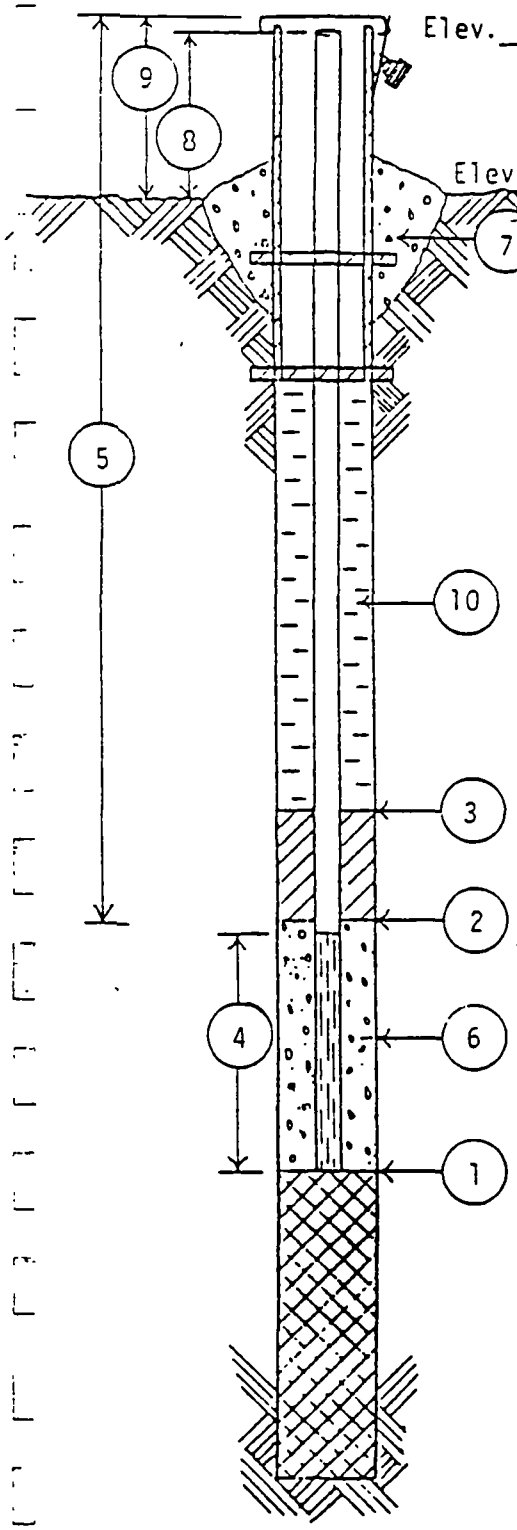

All depth measurements of well detail assumed to be from ground surface unless otherwise indicated.

(1) DEPTH TO BOTTOM OF WELL POINT OR SLOTTED PIPE 11.9 FEET.

(2) DEPTH OF BOTTOM OF SEAL (if installed) - FEET.

(3) DEPTH TO TOP OF SEAL (if installed) - FEET.

(4) LENGTH OF (WELL POINT), PVC WELL SCREEN, OR SLOTTED PIPE 5.5 FEET. (Circle One)

(5) TOTAL LENGTH OF PIPE 10 FEET @ 1¼ IN. DIAMETER.

(6) TYPE OF FILTER MATERIAL AROUND WELL POINT OR SLOTTED PIPE Flint Sand.

(7) CONCRETE CAP, (YES) NO (Circle One)

(8) HEIGHT OF WELL CASING ABOVE GROUND 3.6 FEET.

(9) PROTECTIVE CASING? (YES) NO (Circle One)
HEIGHT ABOVE GROUND 3.5.

(10) LOCKING CAP? (YES) NO (Circle One)
TYPE OF BACKFILL: Flint Sand

WATER LEVEL CHECKS

*From top of casing, if protective casing higher, take measurement from top of protective casing.

BORING #	DATE	TIME	DEPTH TO WATER	REMARKS
3	7/25/79		11.67	
3	7/26/79		11.44	
3	7/27/79		11.80	

WARZYN

WELL DETAIL INFORMATION SHEET

Name refered to in JKB report (1981) - W4A (1/17/94 JAB of Barr)

JOB NO. 8342

BORING NO. 4A

DATE 7/23/79

CHIEF Jim Grieger

LOCATION OMC-Waukegan, Illinois

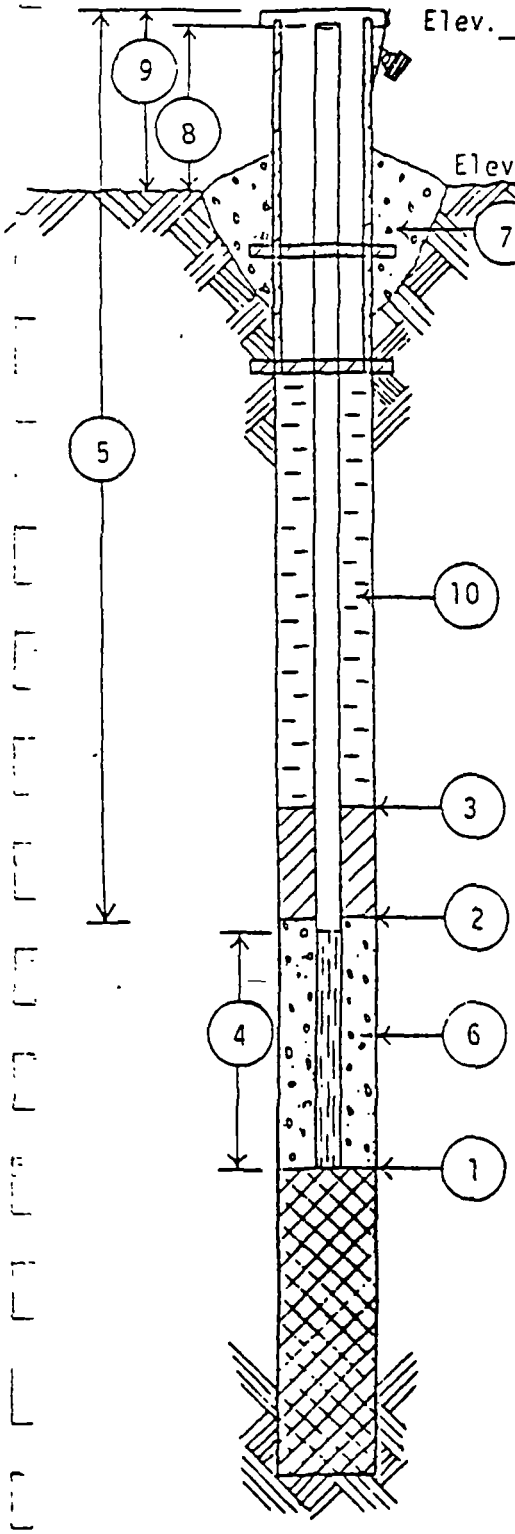

All depth measurements of well detail assumed to be from ground surface unless otherwise indicated.

1. DEPTH TO BOTTOM OF WELL POINT OR SLOTTED PIPE 8.6 FEET.
2. DEPTH OF BOTTOM OF SEAL (if installed) - FEET.
3. DEPTH TO TOP OF SEAL (if installed) - FEET.
4. LENGTH OF (WELL POINT), PVC WELL SCREEN, OR SLOTTED PIPE 5.5 FEET. (Circle One)
5. TOTAL LENGTH OF PIPE 5 FEET @ 1¼ IN. DIAMETER.
6. TYPE OF FILTER MATERIAL AROUND WELL POINT OR SLOTTED PIPE Flint Sand.
7. CONCRETE CAP, (YES) NO (Circle One)
8. HEIGHT OF WELL CASING ABOVE GROUND 1.9 FEET.
9. PROTECTIVE CASING? (YES) NO (Circle One) HEIGHT ABOVE GROUND 2.2.
10. LOCKING CAP? (YES) NO (Circle One) TYPE OF BACKFILL: Flint Sand

WATER LEVEL CHECKS

*From top of casing, if protective casing higher, take measurement from top of protective casing.

BORING #	DATE	TIME	DEPTH TO WATER	REMARKS
4A	7/25/79		4.42	
4A	7/26/79		4.18	
4A	7/27/79		4.64	

WARZ

JRB report (1981)
W4B (1/17/94 JAB & Bar.

JOB NO. 8342

BORING NO. 4B

DATE 7/24/79

CHIEF Jim Grieger

LOCATION OMC-Waukegan, Illinois

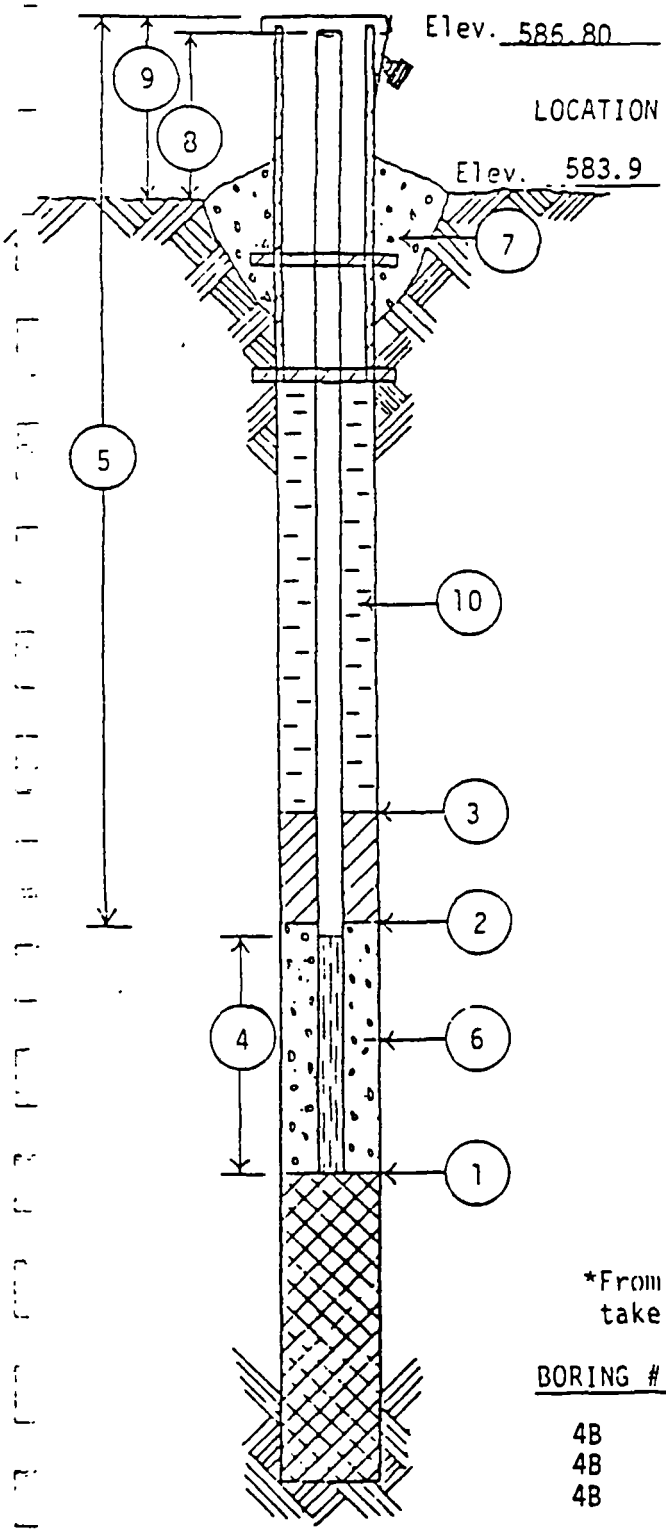

All depth measurements of well detail assumed to be from ground surface unless otherwise indicated.

1. DEPTH TO BOTTOM OF WELL POINT OR SLOTTED PIPE 19.6 FEET.
2. DEPTH OF BOTTOM OF SEAL (if installed) 16 FEET.
3. DEPTH TO TOP OF SEAL (if installed) 13 FEET.
4. LENGTH OF WELL POINT, PVC WELL SCREEN, OR SLOTTED PIPE 2.5 FEET. (Circle One)
5. TOTAL LENGTH OF PIPE 20 FEET @ 1¼ IN. DIAMETER.
6. TYPE OF FILTER MATERIAL AROUND WELL POINT OR SLOTTED PIPE Flint Sand.
7. CONCRETE CAP, YES NO (Circle One)
8. HEIGHT OF WELL CASING ABOVE GROUND 2.9 FEET.
9. PROTECTIVE CASING? YES NO (Circle One) HEIGHT ABOVE GROUND 2.8.
10. LOCKING CAP? YES NO (Circle One) TYPE OF BACKFILL: Flint Sand & Cave-in

WATER LEVEL CHECKS

*From top of casing, if protective casing higher, take measurement from top of protective casing.

BORING #	DATE	TIME	DEPTH TO WATER	REMARKS
4B	7/25/79		4.95	
4B	7/26/79		4.79	
4B	7/27/79		5.25	

WARZYN

WELL DETAIL INFORMATION SHEET

JRB report (.981) - W4C
(1/17/94 JAB of B...)

JOB NO. 8342

BORING NO. 4C

DATE 7/24/79

CHIEF Jim Grieger

LOCATION OMC-Waukegan, Illinois

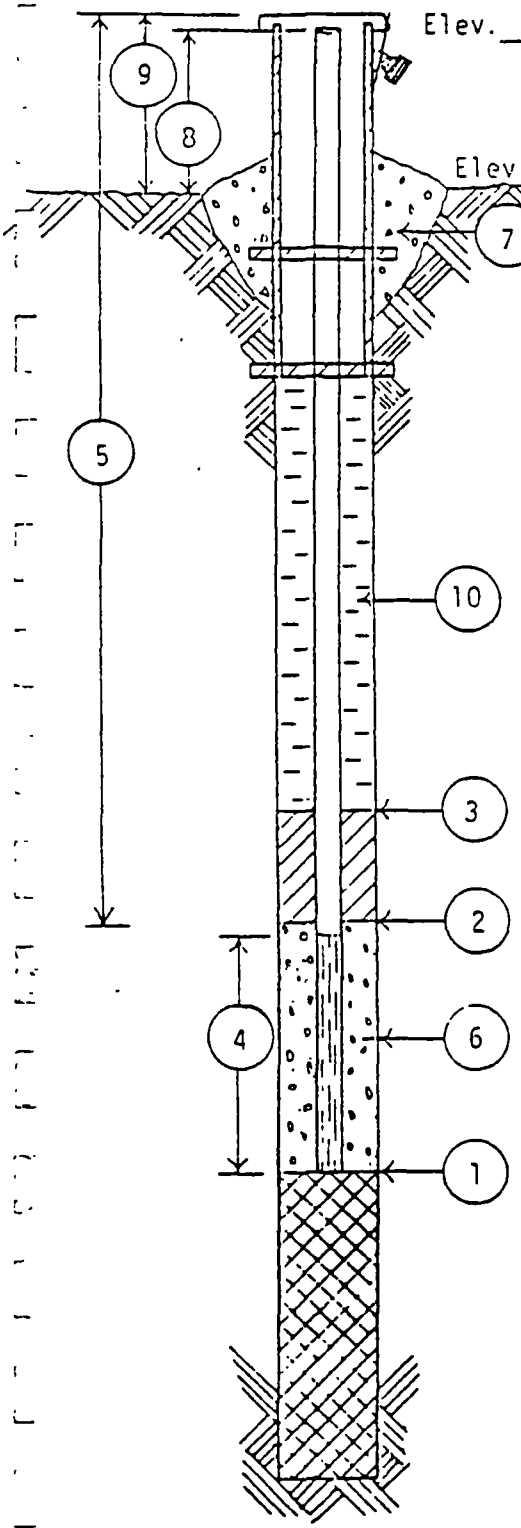

All depth measurements of well detail assumed to be from ground surface unless otherwise indicated.

(1) DEPTH TO BOTTOM OF WELL POINT OR SLOTTED PIPE 26.6 FEET.

(2) DEPTH OF BOTTOM OF SEAL (if installed) 23 FEET.

(3) DEPTH TO TOP OF SEAL (if installed) 20 FEET.

(4) LENGTH OF (WELL POINT) PVC WELL SCREEN, OR SLOTTED PIPE 2.5 FEET. (Circle One)

(5) TOTAL LENGTH OF PIPE 27.5 FEET @ 1¼ IN. DIAMETER.

(6) TYPE OF FILTER MATERIAL AROUND WELL POINT OR SLOTTED PIPE Flint Sand.

(7) CONCRETE CAP, (YES) NO (Circle One)

(8) HEIGHT OF WELL CASING ABOVE GROUND 3.4 FEET.

(9) PROTECTIVE CASING? (YES) NO (Circle One)
HEIGHT ABOVE GROUND 3.5.

(10) LOCKING CAP? (YES) NO (Circle One)
TYPE OF BACKFILL: Flint Sand & Cave-in

WATER LEVEL CHECKS

*From top of casing, if protective casing higher, take measurement from top of protective casing.

BORING #	DATE	TIME	DEPTH TO WATER	REMARKS
4C	7/25/79		5.72	
4C	7/26/79		5.48	
4C	7/27/79		5.93	

WARZYN

NAME [illegible] TO [illegible]
JRB report (1981)-W5
(1/17/94 JAB of Barr)

JOB NO. 8342

BORING NO. 5

DATE 7/25/79

CHIEF Jim Grieger

LOCATION OMC-Waukegan, Illinois

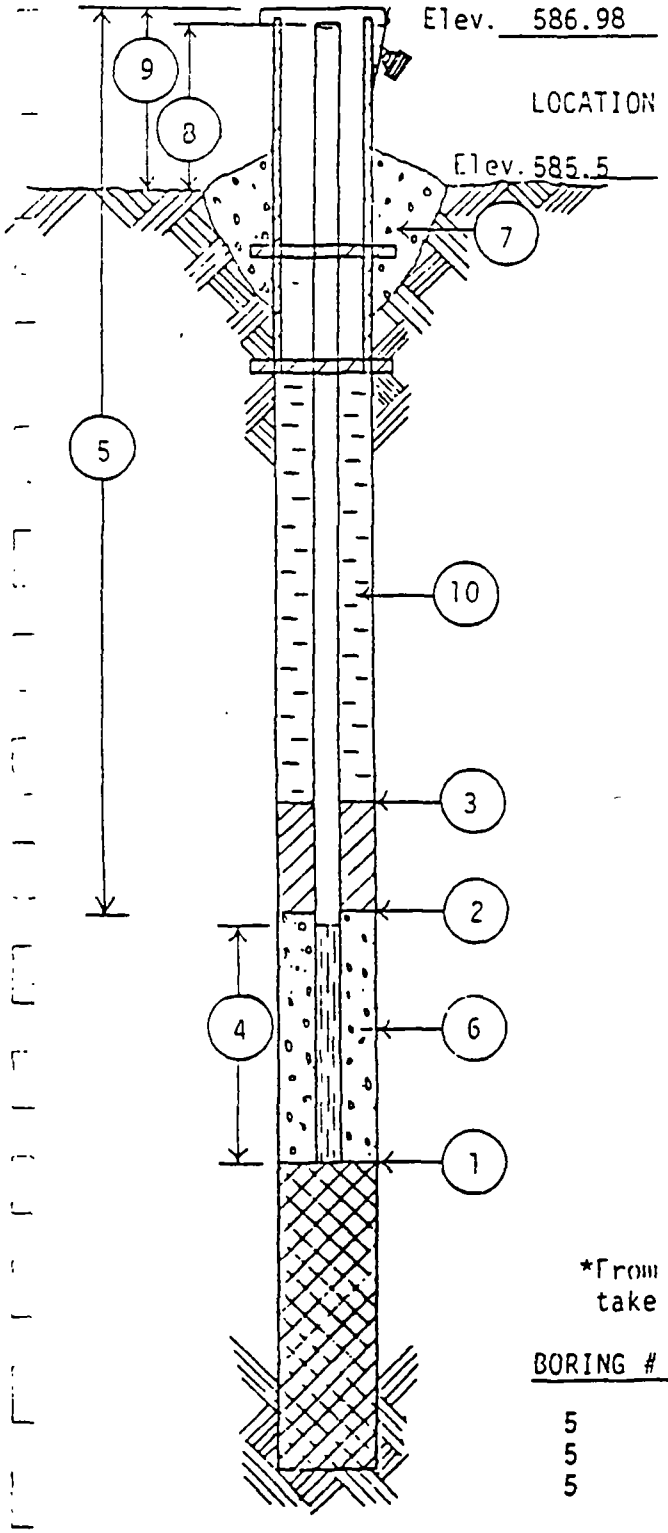

All depth measurements of well detail assumed to be from ground surface unless otherwise indicated.

1. DEPTH TO BOTTOM OF WELL POINT OR SLOTTED PIPE 9.0 FEET.
2. DEPTH OF BOTTOM OF SEAL (if installed) - FEET.
3. DEPTH TO TOP OF SEAL (if installed) - FEET.
4. LENGTH OF WELL POINT, PVC WELL SCREEN, OR SLOTTED PIPE 5.5 FEET. (Circle One)
5. TOTAL LENGTH OF PIPE 5 FEET @ 1¼ IN. DIAMETER.
6. TYPE OF FILTER MATERIAL AROUND WELL POINT OR SLOTTED PIPE Flint Sand.
7. CONCRETE CAP, YES NO (Circle One)
8. HEIGHT OF WELL CASING ABOVE GROUND -1.5 FEET.
9. PROTECTIVE CASING? YES NO (Circle One) HEIGHT ABOVE GROUND 3.4.
10. LOCKING CAP? YES NO (Circle One) TYPE OF BACKFILL: Flint Sand

WATER LEVEL CHECKS

*From top of casing, if protective casing higher, take measurement from top of protective casing.

BORING #	DATE	TIME	DEPTH TO WATER	REMARKS
5	7/25/79		6.68	
5	7/26/79		6.65	
5	7/27/79		6.65	

WARZYN

Name [illegible]
JRB Report (1981) - W 6
(1/17/94 JAB of Barr)

JOB NO. 8342

BORING NO. 6

DATE 7/25/79

CHIEF Jim Grieger

LOCATION OMC-Waukegan, Illinois

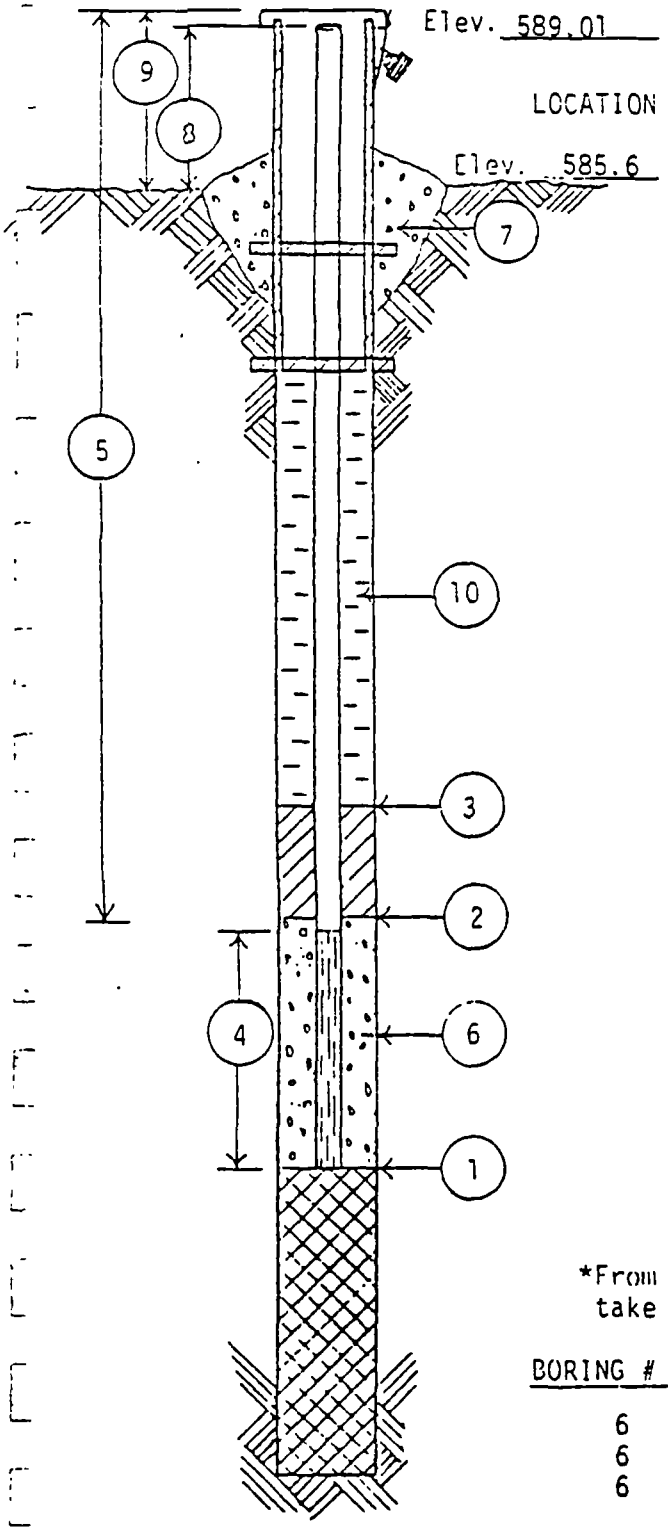

All depth measurements of well detail assumed to be from ground surface unless otherwise indicated.

1. DEPTH TO BOTTOM OF WELL POINT OR SLOTTED PIPE 9.6 FEET.
2. DEPTH OF BOTTOM OF SEAL (if installed) - FEET.
3. DEPTH TO TOP OF SEAL (if installed) - FEET.
4. LENGTH OF (WELL POINT) PVC WELL SCREEN, OR SLOTTED PIPE 5.5 FEET. (Circle One)
5. TOTAL LENGTH OF PIPE 7.5 FEET @ 1¼ IN. DIAMETER.
6. TYPE OF FILTER MATERIAL AROUND WELL POINT OR SLOTTED PIPE Flint Sand.
7. CONCRETE CAP, (YES) NO (Circle One)
8. HEIGHT OF WELL CASING ABOVE GROUND 3.4 FEET.
9. PROTECTIVE CASING? (YES) NO (Circle One) HEIGHT ABOVE GROUND 3.3.
10. LOCKING CAP? (YES) NO (Circle One) TYPE OF BACKFILL: Flint Sand

WATER LEVEL CHECKS

*From top of casing, if protective casing higher, take measurement from top of protective casing.

BORING #	DATE	TIME	DEPTH TO WATER	REMARKS
6	7/25/79		7.25	
6	7/26/79		7.22	
6	7/27/79		7.23	

WARZY

PIEZOMETER DETAIL INFORMATION SHEET

JRB Report - W 7A
(4/17/94 JAE of Batt)

JOB NO. 8342

BORING NO. 7A

DATE 7/26/79

CHIEF Jim Grieger

LOCATION OMC-Waukegan, Illinois

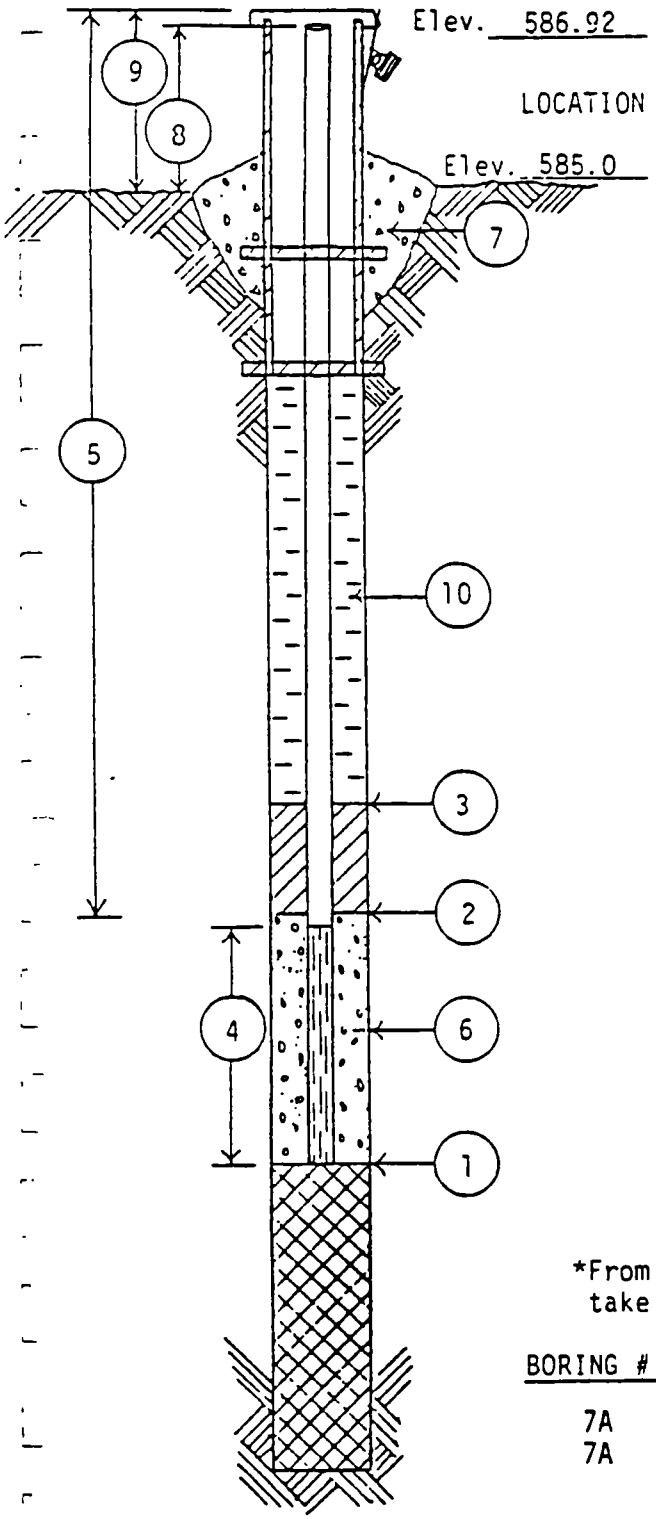

All depth measurements of well detail assumed to be from ground surface unless otherwise indicated.

(1) DEPTH TO BOTTOM OF WELL POINT OR SLOTTED PIPE 8.6 FEET.

(2) DEPTH OF BOTTOM OF SEAL (if installed) - FEET.

(3) DEPTH TO TOP OF SEAL (if installed) - FEET.

(4) LENGTH OF WELL POINT, PVC WELL SCREEN, OR SLOTTED PIPE 5.5 FEET. (Circle One)

(5) TOTAL LENGTH OF PIPE 5 FEET @ 1¼ IN. DIAMETER.

(6) TYPE OF FILTER MATERIAL AROUND WELL POINT OR SLOTTED PIPE Flint Sand.

(7) CONCRETE CAP, (YES) NO (Circle One)

(8) HEIGHT OF WELL CASING ABOVE GROUND 1.9 FEET.

(9) PROTECTIVE CASING? (YES) NO (Circle One)
HEIGHT ABOVE GROUND 2.5.

(10) LOCKING CAP? (YES) NO (Circle One)
TYPE OF BACKFILL: Flint Sand

WATER LEVEL CHECKS

*From top of casing, if protective casing higher, take measurement from top of protective casing.

BORING #	DATE	TIME	DEPTH TO WATER	REMARKS
7A	7/26/79		5.35	
7A	7/27/79		5.78	

WARZYN

PIEZOMETER DETAIL INFORMATION SHEET

Name referred to in JRB Report (1981) W7B (1/17/74, JAE of Bar.

JOB NO. 8342

BORING NO. 7B

DATE 7/26/79

CHIEF Jim Grieger

LOCATION OMC-Waukegan, Illinois

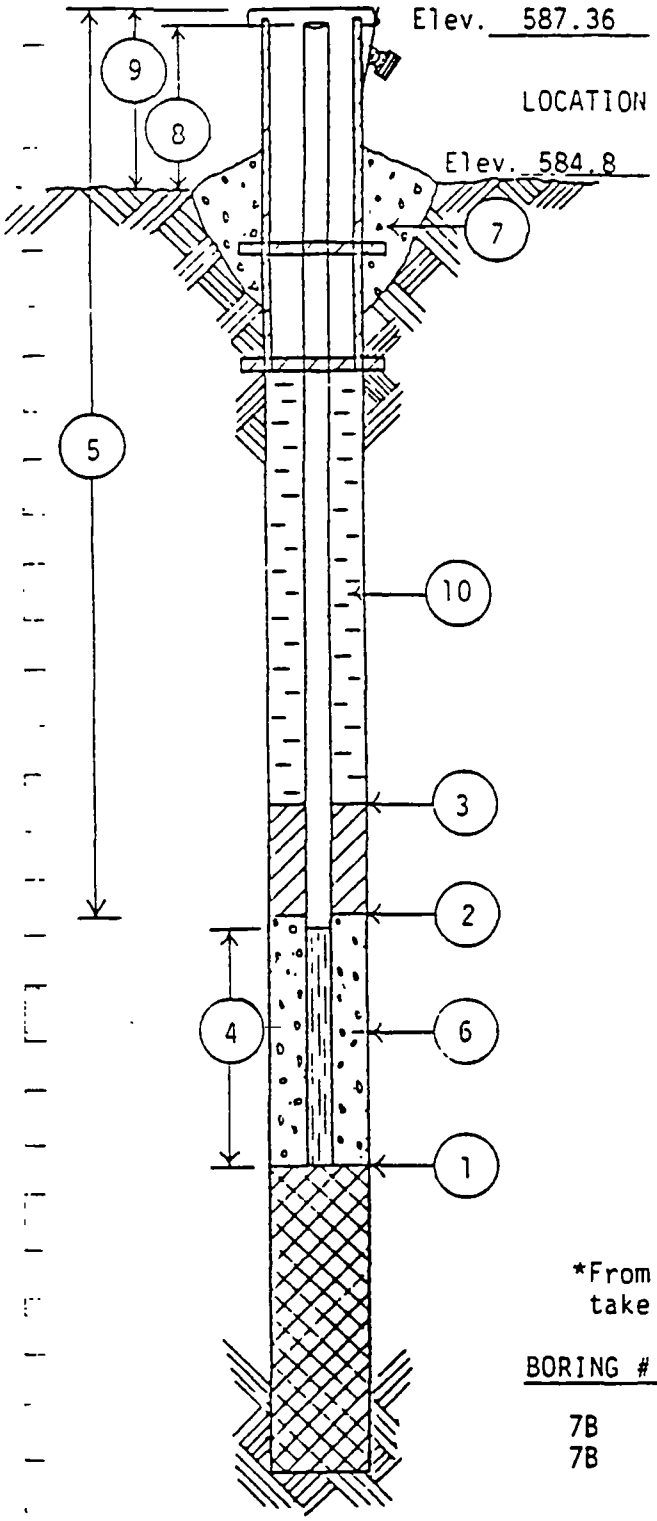

All depth measurements of well detail assumed to be from ground surface unless otherwise indicated.

(1) DEPTH TO BOTTOM OF WELL POINT OR SLOTTED PIPE 15.9 FEET.

(2) DEPTH OF BOTTOM OF SEAL (if installed) 12 FEET.

(3) DEPTH TO TOP OF SEAL (if installed) 9 FEET.

(4) LENGTH OF (WELL POINT) PVC WELL SCREEN, OR SLOTTED PIPE 2.5 FEET. (Circle One)

(5) TOTAL LENGTH OF PIPE 16 FEET @ 1¼ IN. DIAMETER.

(6) TYPE OF FILTER MATERIAL AROUND WELL POINT OR SLOTTED PIPE Flint Sand.

(7) CONCRETE CAP, (YES) NO (Circle On.

(8) HEIGHT OF WELL CASING ABOVE GROUND 2.6 FEET.

(9) PROTECTIVE CASING? (YES) NO (Circle One) HEIGHT ABOVE GROUND 3.0.

(10) LOCKING CAP? (YES) NO (Circle One) TYPE OF BACKFILL: Flint Sand & Cave-in

WATER LEVEL CHECKS

*From top of casing, if protective casing higher, take measurement from top of protective casing.

BORING #	DATE	TIME	DEPTH TO WATER	REMARKS
7B	7/26/79		5.63	
7B	7/27/79		6.04	

WARZYN

PIEZOMETER DETAIL INFORMATION SHEET

Name referred to in JRB report (1981) WTC (1/17/94 JF of Barr

JOB NO. 8342

BORING NO. 7C

DATE 7/26/79

CHIEF Jim Grieger

LOCATION OMC-Waukegan, Illinois

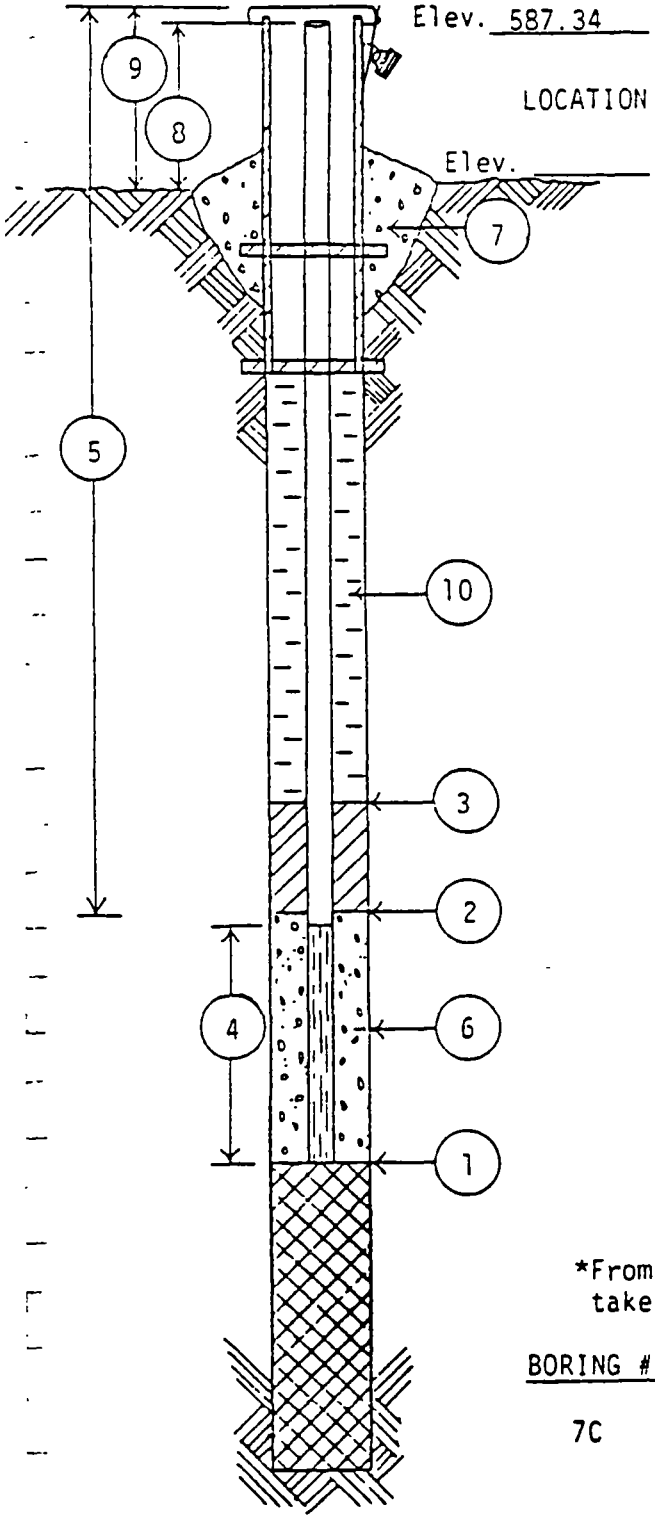

All depth measurements of well detail assumed to be from ground surface unless otherwise indicated.

(1) DEPTH TO BOTTOM OF WELL POINT OR SLOTTED PIPE 22.6 FEET.

(2) DEPTH OF BOTTOM OF SEAL (if installed) 19 FEET.

(3) DEPTH TO TOP OF SEAL (if installed) 16 FEET.

(4) LENGTH OF (WELL POINT) PVC WELL SCREEN, OR SLOTTED PIPE 2.5 FEET. (Circle One)

(5) TOTAL LENGTH OF PIPE 22.5 FEET @ 1¼ IN. DIAMETER.

(6) TYPE OF FILTER MATERIAL AROUND WELL POINT OR SLOTTED PIPE Flint Sand.

(7) CONCRETE CAP, (YES) NO (Circle One)

(8) HEIGHT OF WELL CASING ABOVE GROUND 2.4 FEET.

(9) PROTECTIVE CASING? (YES) NO (Circle One)
HEIGHT ABOVE GROUND 3.1.

(10) LOCKING CAP? (YES) NO (Circle One)
TYPE OF BACKFILL: Flint Sand & Cave-in

WATER LEVEL CHECKS

*From top of casing, if protective casing higher, take measurement from top of protective casing.

BORING #	DATE	TIME	DEPTH TO WATER	REMARKS
7C	7/27/79		6.39	

WARZYN ENGINEERING INC

PIEZOMETER DETAIL INFORMATION SHEET

Name refered to in JRB report (1981)

JOB NO. 8342

BORING NO. 8

w8 (1/17/94, JAE of Boir)

DATE 7/17/79

CHIEF Jim Grieger

LOCATION OMC-Waukegan, Illinois

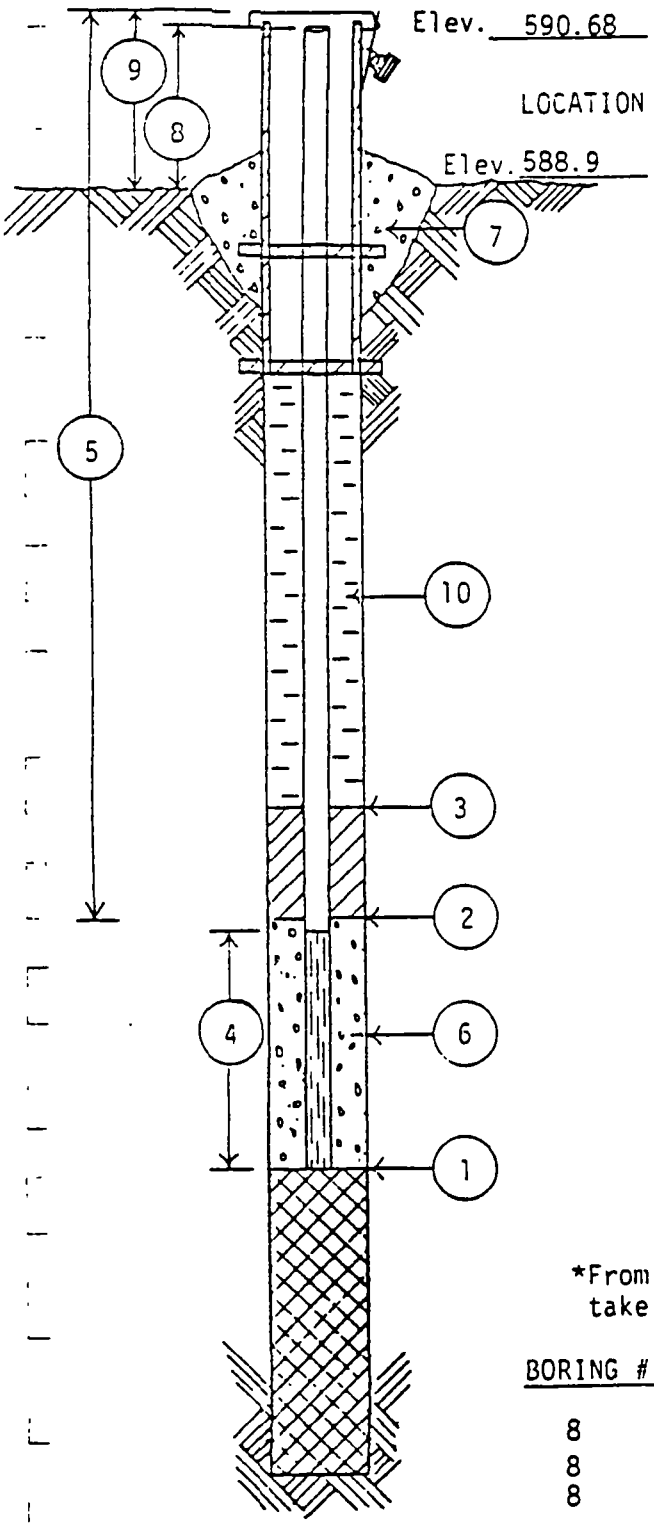

All depth measurements of well detail assumed to be from ground surface unless otherwise indicated.

1. DEPTH TO BOTTOM OF WELL POINT OR SLOTTED PIPE 8.7 FEET.
2. DEPTH OF BOTTOM OF SEAL (if installed) - FEET.
3. DEPTH TO TOP OF SEAL (if installed) - FEET.
4. LENGTH OF WELL POINT, PVC WELL SCREEN, OR SLOTTED PIPE 5.5 FEET. (Circle One)
5. TOTAL LENGTH OF PIPE 5 FEET @ 1¼ IN. DIAMETER.
6. TYPE OF FILTER MATERIAL AROUND WELL POINT OR SLOTTED PIPE Flint Sand.
7. CONCRETE CAP, YES NO (Circle One)
8. HEIGHT OF WELL CASING ABOVE GROUND 1.8 FEET.
9. PROTECTIVE CASING? YES NO (Circle One) HEIGHT ABOVE GROUND 2.4.
10. LOCKING CAP? YES NO (Circle One) TYPE OF BACKFILL: Flint Sand

WATER LEVEL CHECKS

*From top of casing, if protective casing higher, take measurement from top of protective casing.

BORING #	DATE	TIME	DEPTH TO WATER	REMARKS
8	7/17/79		6.78	
8	7/18/79		6.84	
8	7/19/79		6.88	

WARZYN ENGINEERING INC

PIEZOMETER DETAIL INFORMATION SHEET

Name referred to in JRB report (1981) W9 (1/17/94 JAB of Barr)

JOB NO. 8342

BORING NO. 9

DATE 7/17/79

CHIEF Jim Grieger

LOCATION OMC-Waukegan, Illinois

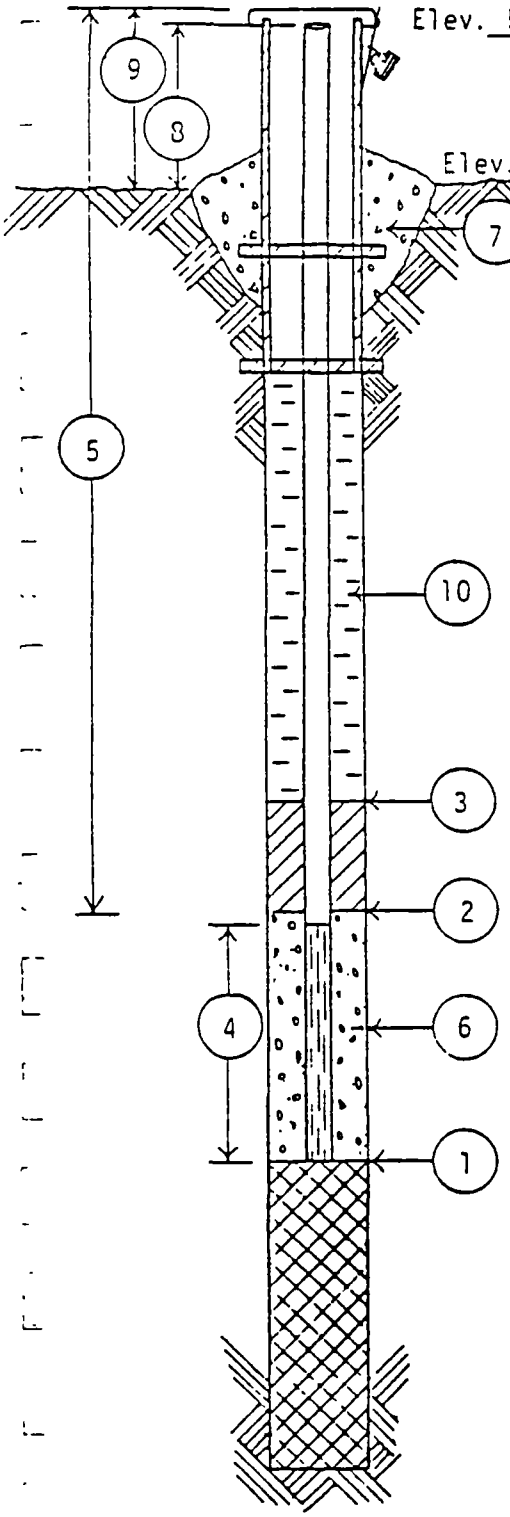

All depth measurements of well detail assumed to be from ground surface unless otherwise indicated.

1. DEPTH TO BOTTOM OF WELL POINT OR SLOTTED PIPE 8.6 FEET.
2. DEPTH OF BOTTOM OF SEAL (if installed) - FEET.
3. DEPTH TO TOP OF SEAL (if installed) - FEET.
4. LENGTH OF (WELL POINT) / PVC WELL SCREEN, OR SLOTTED PIPE 5.5 FEET. (Circle One)
5. TOTAL LENGTH OF PIPE 5 FEET @ 1¼ IN. DIAMETER.
6. TYPE OF FILTER MATERIAL AROUND WELL POINT OR SLOTTED PIPE Flint Sand.
7. CONCRETE CAP, (YES) NO (Circle One)
8. HEIGHT OF WELL CASING ABOVE GROUND 1.9 FEET.
9. PROTECTIVE CASING? (YES) NO (Circle One) HEIGHT ABOVE GROUND 2.5.
10. LOCKING CAP? (YES) NO (Circle One) TYPE OF BACKFILL: Flint Sand

WATER LEVEL CHECKS

*From top of casing, if protective casing higher, take measurement from top of protective casing.

BORING #	DATE	TIME	DEPTH TO WATER	REMARKS
9	7/18/79		6.00	
9	7/19/79		5.97	
9	7/25/79		6.21	

WARZYN ENGINEERING INC

JOB NO. C 9177

BORING NO. MW-1

DATE 5/20/80

CHIEF JWG

LOCATION O.M.C., Wuakegan, Illinois

Name refered to in JRB Report (1981) WIIA (1/17/94 of Barr)

585.78 Protective Elev. 585.61 S.S.

Elev. 583.5

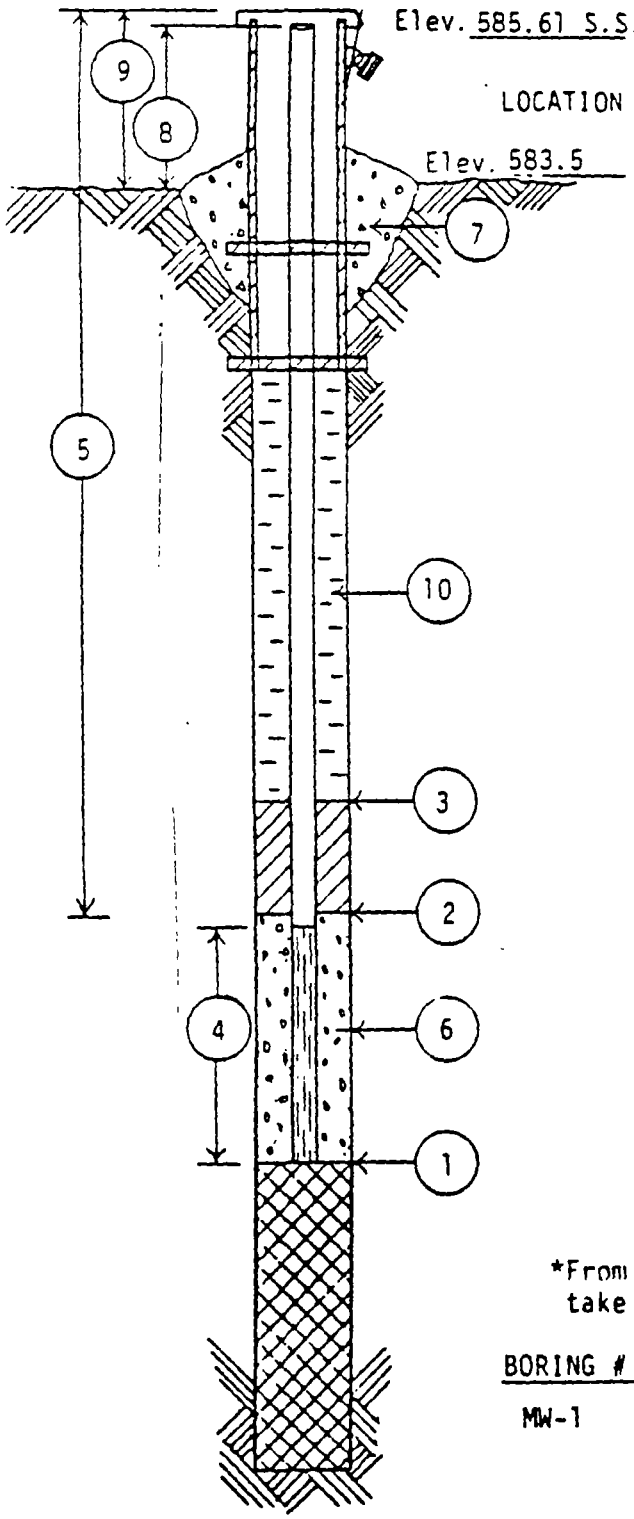

All depth measurements of well detail assumed to be from ground surface unless otherwise indicated.

(1) DEPTH TO BOTTOM OF WELL POINT OR SLOTTED PIPE 9.8 FEET.

(2) DEPTH OF BOTTOM OF SEAL (if installed) 4.3 FEET.

(3) DEPTH TO TOP OF SEAL (if installed) 0.0 FEET.

(4) LENGTH OF (WELL POINT), PVC WELL SCREEN, OR SLOTTED PIPE 5 FEET. (Circle One)

(5) TOTAL LENGTH OF PIPE 12 FEET @ 2 IN. DIAMETER.

(6) TYPE OF FILTER MATERIAL AROUND WELL POINT OR SLOTTED PIPE Natural.

(7) CONCRETE CAP, (YES) NO (Circle One)

(8) HEIGHT OF WELL CASING ABOVE GROUND 2.2 FEET.

(9) PROTECTIVE CASING? (YES) NO (Circle One)
HEIGHT ABOVE GROUND 2.3.
LOCKING CAP? (YES) NO (Circle One)

(10) TYPE OF BACKFILL: Bentonite

WATER LEVEL CHECKS

*From top of casing, if protective casing higher, take measurement from top of protective casing.

BORING #	DATE	TIME	DEPTH TO WATER	REMARKS
MW-1	5/20/80	PM	2'6"	from ground

WARZYN

JOB NO. C 9177

BORING NO. MW-2

(Name referred to in IRB report (1981) - W11B (1/17/96 JAB of Barr)

586.68 Protective Elev. 586.52 S.S.

DATE 5/21/80

CHIEF JWG

LOCATION O.M.C., Wuakegan, Illinois

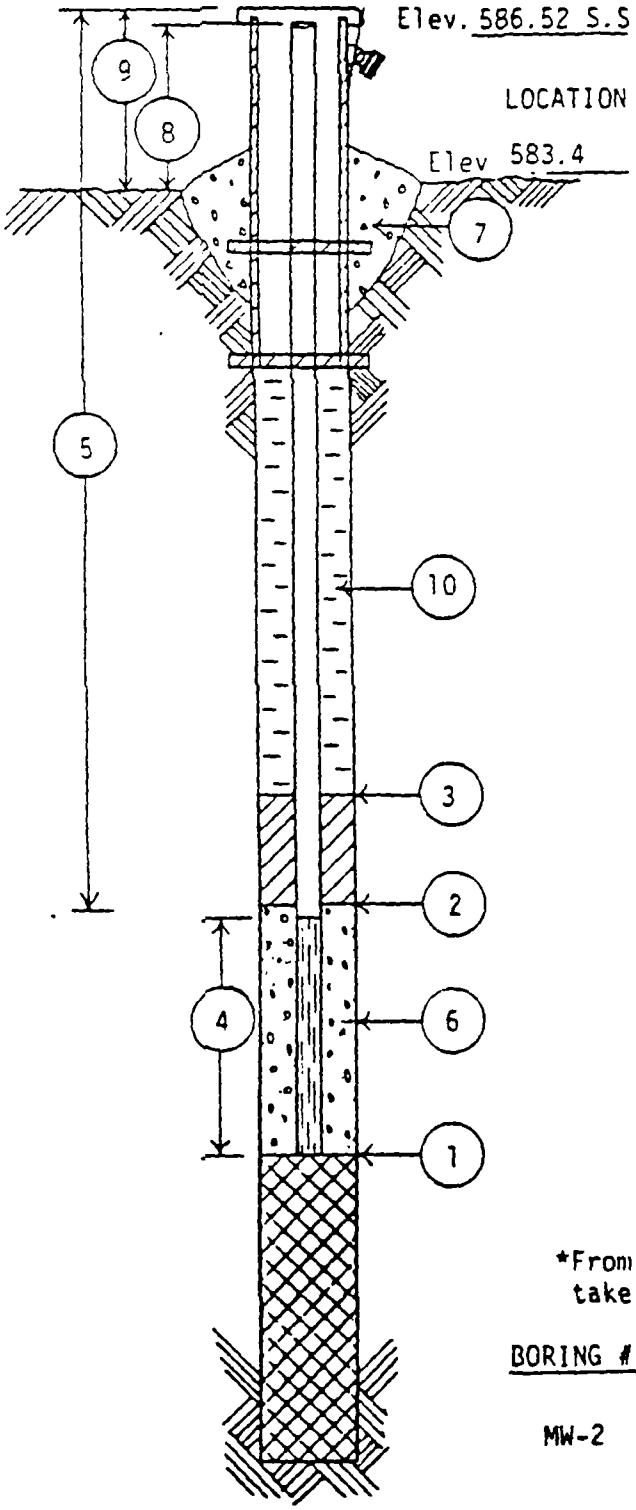

All depth measurements of well detail assumed to be from ground surface unless otherwise indicated.

(1) DEPTH TO BOTTOM OF WELL POINT OR SLOTTED PIPE 15'5" FEET.

(2) DEPTH OF BOTTOM OF SEAL (if installed) 12 FEET.

(3) DEPTH TO TOP OF SEAL (if installed) 11 FEET.

(4) LENGTH OF (WELL POINT), PVC WELL SCREEN, OR SLOTTED PIPE 2'6" FEET. (Circle One)

(5) TOTAL LENGTH OF PIPE 18'6" FEET @ 2 IN. DIAMETER.

(6) TYPE OF FILTER MATERIAL AROUND WELL POINT OR SLOTTED PIPE Natural.

(7) CONCRETE CAP, (YES) NO (Circle One)

(8) HEIGHT OF WELL CASING ABOVE GROUND 3'1" FEET.

(9) PROTECTIVE CASING? (YES) NO (Circle One)
HEIGHT ABOVE GROUND 3'2".
LOCKING CAP? (YES) NO (Circle One)

(10) TYPE OF BACKFILL: Natural & Bentonite

WATER LEVEL CHECKS

*From top of casing, if protective casing higher, take measurement from top of protective casing.

BORING #	DATE	TIME	DEPTH TO WATER	REMARKS
MW-2	5/21/80	AM	2'6"±	from ground

WARZYN

0

JOB NO. C 9177

BORING NO. MW-3

DATE 5/21/80

CHIEF JWG

LOCATION O.M.C., Wuakegan, Illinois

Name Referred to in JRB report (1981) - WIIC (1/17/94 JAF & Karl

586.94 Protective Elev. 586.79 S.S.

Elev. 583.4

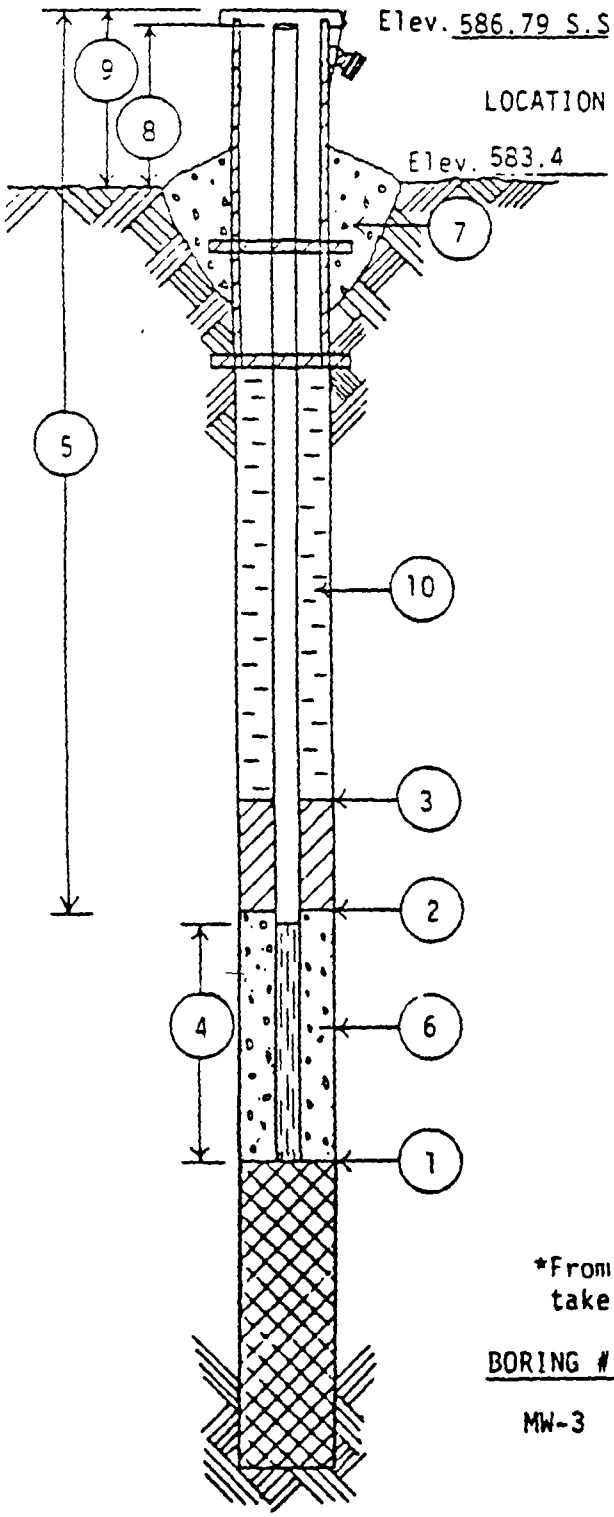

All depth measurements of well detail assumed to be from ground surface unless otherwise indicated.

1. DEPTH TO BOTTOM OF WELL POINT OR SLOTTED PIPE 27 FEET.
2. DEPTH OF BOTTOM OF SEAL (if installed) 24 FEET.
3. DEPTH TO TOP OF SEAL (if installed) 23 FEET.
4. LENGTH OF (WELL POINT) PVC WELL SCREEN, OR SLOTTED PIPE 2'6" FEET. (Circle One)
5. TOTAL LENGTH OF PIPE 29'6" FEET @ 2 IN. DIAMETER.
6. TYPE OF FILTER MATERIAL AROUND WELL POINT OR SLOTTED PIPE Natural.
7. CONCRETE CAP, (YES) NO (Circle One)
8. HEIGHT OF WELL CASING ABOVE GROUND 2'6" FEET.
9. PROTECTIVE CASING? (YES) NO (Circle One)
   HEIGHT ABOVE GROUND 2'7".
   LOCKING CAP? (YES) NO (Circle One)
10. TYPE OF BACKFILL: Bentonite

WATER LEVEL CHECKS

*From top of casing, if protective casing higher, take measurement from top of protective casing.

BORING #	DATE	TIME	DEPTH TO WATER	REMARKS
MW-3	5/21/80	PM	2'6"±	from ground

WARZYN ENGINEERING INC

JOB NO. C 9177

BORING NO. MW-4 Name referred to in JRB Report (1981) - W10

DATE 5/21/80

CHIEF St. Dennis (1/17/94 JAB Barr)

LOCATION O.M.C. Waukegan, Illinois

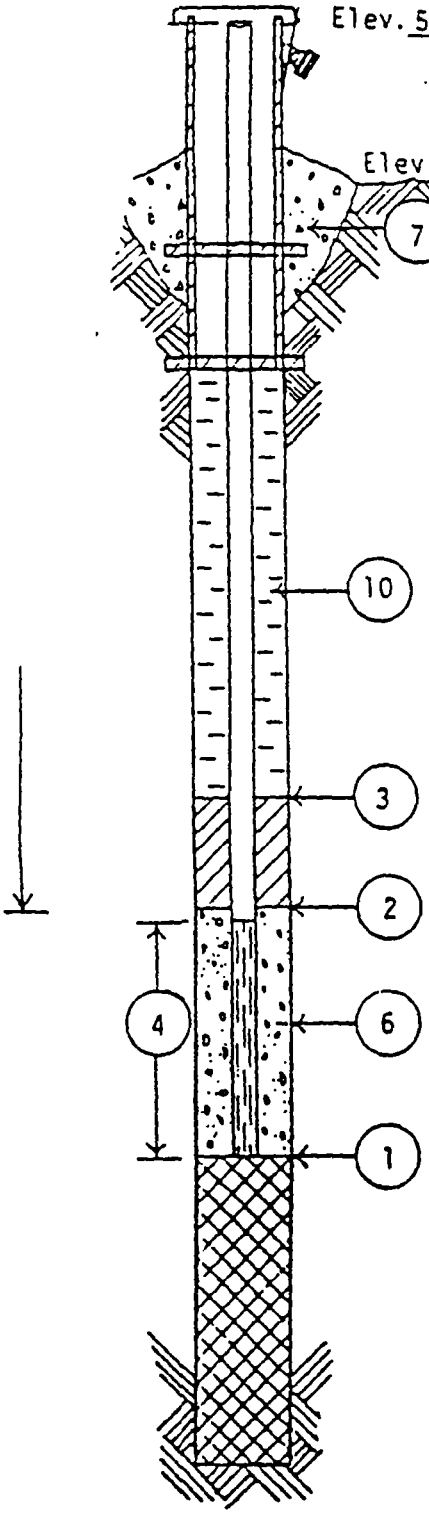

All depth measurements of well detail assumed to be from ground surface unless otherwise indicated.

(1) DEPTH TO BOTTOM OF WELL POINT OR SLOTTED PIPE 7'6" FEET.

(2) DEPTH OF BOTTOM OF SEAL (if installed) 2 FEET.

(3) DEPTH TO TOP OF SEAL (if installed) 0 FEET.

(4) LENGTH OF (WELL POINT,) PVC WELL SCREEN, OR SLOTTED PIPE 5 FEET. (Circle One)

(5) TOTAL LENGTH OF PIPE 9'6" FEET @ 2 IN. DIAMETER.

(6) TYPE OF FILTER MATERIAL AROUND WELL POINT OR SLOTTED PIPE Flint Sand.

(7) CONCRETE CAP, (YES) NO (Circle One)

(8) HEIGHT OF WELL CASING ABOVE GROUND 2 FEET.

(9) PROTECTIVE CASING? (YES) NO (Circle One)
HEIGHT ABOVE GROUND 21.
LOCKING CAP? (YES) NO (Circle One)

(10) TYPE OF BACKFILL: Bentonite

WATER LEVEL CHECKS

*From top of casing, if protective casing higher, take measurement from top of protective casing.

BORING #	DATE	TIME	DEPTH TO WATER	REMARKS

WARZYN

Name referred to in JRB report (1981) - W12 (1/17/94 JAE of Parr)

JOB NO. C 9177

BORING NO. MW-5

585.27 Protective

Elev. 585.09 S.S.

DATE 5/20/80

CHIEF JWG

LOCATION O.M.C., Waukegan, Illinois

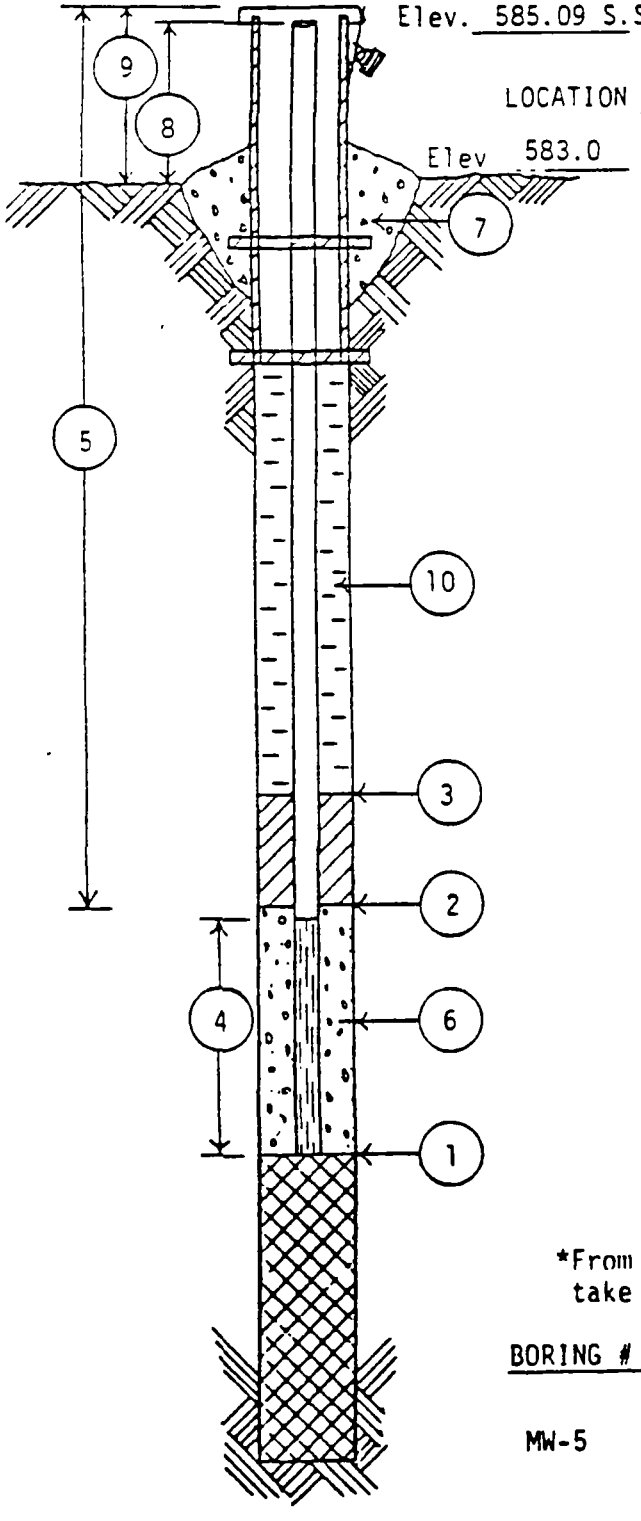

All depth measurements of well detail assumed to be from ground surface unless otherwise indicated.

1. DEPTH TO BOTTOM OF WELL POINT OR SLOTTED PIPE 7 FEET.
2. DEPTH OF BOTTOM OF SEAL (if installed) 2 FEET.
3. DEPTH TO TOP OF SEAL (if installed) 0 FEET.
4. LENGTH OF WELL POINT, PVC WELL SCREEN, OR SLOTTED PIPE 5 FEET. (Circle One)
5. TOTAL LENGTH OF PIPE 9 FEET @ 2 IN. DIAMETER.
6. TYPE OF FILTER MATERIAL AROUND WELL POINT OR SLOTTED PIPE Natural.
7. CONCRETE CAP, YES NO (Circle One)
8. HEIGHT OF WELL CASING ABOVE GROUND 2 FEET.
9. PROTECTIVE CASING? YES NO (Circle One)
   HEIGHT ABOVE GROUND 2.1.
   LOCKING CAP? YES NO (Circle One)
10. TYPE OF BACKFILL: Bentonite

WATER LEVEL CHECKS

*From top of casing, if protective casing higher, take measurement from top of protective casing.

BORING #	DATE	TIME	DEPTH TO WATER	REMARKS
MW-5	5/20/80	AM	1.4	from ground

WARZYN

JOB NO. C 9177

Name related to in JRB Report (1981)

BORING NO. MW-6

DATE 5/21/80

W13 (1/17/94, JAB of Barr)

CHIEF St. Dennis

LOCATION O.M.C., Waukegan, Illinois

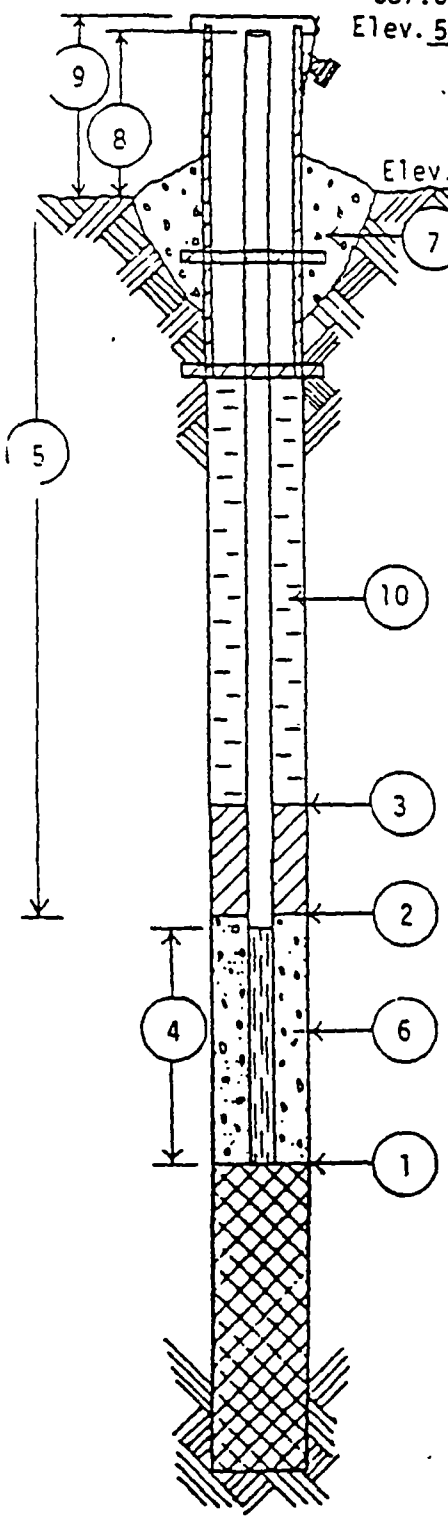

All depth measurements of well detail assumed to be from ground surface unless otherwise indicated.

(1) DEPTH TO BOTTOM OF WELL POINT OR SLOTTED PIPE 10 FEET.

(2) DEPTH OF BOTTOM OF SEAL (if installed) 3 FEET.

(3) DEPTH TO TOP OF SEAL (if installed) 0 FEET.

(4) LENGTH OF (WELL POINT,) PVC WELL SCREEN, OR SLOTTED PIPE 5 FEET. (Circle One)

(5) TOTAL LENGTH OF PIPE 12'6" FEET @ 2 IN. DIAMETER.

(6) TYPE OF FILTER MATERIAL AROUND WELL POINT OR SLOTTED PIPE Flint Sand.

(7) CONCRETE CAP, (YES) NO (Circle One)

(8) HEIGHT OF WELL CASING ABOVE GROUND 2'6" FEET.

(9) PROTECTIVE CASING? (YES) NO (Circle One)
HEIGHT ABOVE GROUND 2'7".
LOCKING CAP? (YES) NO (Circle One)

(10) TYPE OF BACKFILL: Sand & Bentonite Mix

WATER LEVEL CHECKS

*From top of casing, if protective casing higher, take measurement from top of protective casing.

BORING #	DATE	TIME	DEPTH TO WATER	REMARKS

WARZYN

JOB NO. C 9177

BORING NO. MW-7

Name Related to JRB report (1981) - W14 (1/17/94 - JAE of Ba

DATE 5/23/80

CHIEF JWG

LOCATION O.M.C., Waukegan, Illinois

587.65 Protective Elev.

Elev 584.55

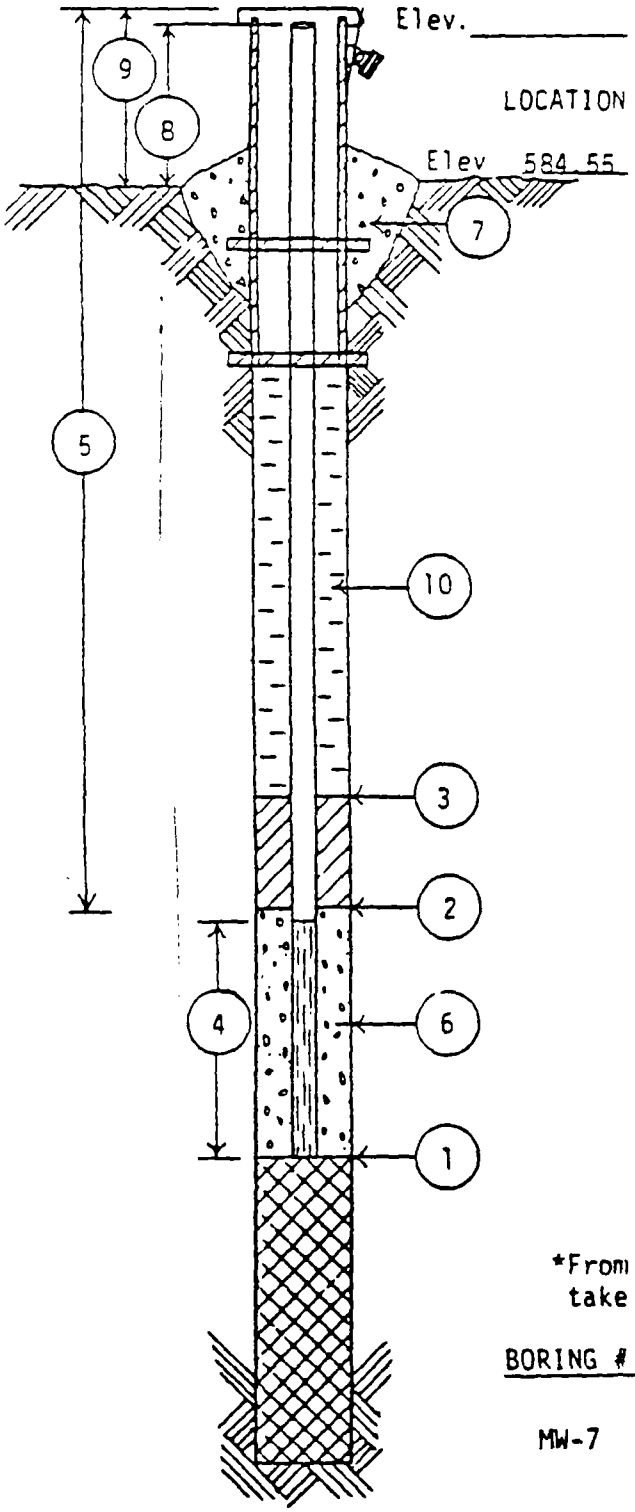

All depth measurements of well detail assumed to be from ground surface unless otherwise indicated.

(1) DEPTH TO BOTTOM OF WELL POINT OR SLOTTED PIPE 9'6" FEET.

(2) DEPTH OF BOTTOM OF SEAL (if installed) 3 FEET.

(3) DEPTH TO TOP OF SEAL (if installed) 0 FEET.

(4) LENGTH OF (WELL POINT), PVC WELL SCREEN, OR SLOTTED PIPE 5 FEET. (Circle One)

(5) TOTAL LENGTH OF PIPE 12'6" FEET @ 2 IN. DIAMETER.

(6) TYPE OF FILTER MATERIAL AROUND WELL POINT OR SLOTTED PIPE Natural.

(7) CONCRETE CAP, (YES) NO (Circle O

(8) HEIGHT OF WELL CASING ABOVE GROUND 3 FEET.

(9) PROTECTIVE CASING? (YES) NO (Circle One)
HEIGHT ABOVE GROUND 3.1.
LOCKING CAP? (YES) NO (Circle One)

(10) TYPE OF BACKFILL: Bentonite

WATER LEVEL CHECKS

*From top of casing, if protective casing higher, take measurement from top of protective casing.

BORING #	DATE	TIME	DEPTH TO WATER	REMARKS
MW-7	5/23/80	AM	3'6"±	from ground

WARZYN

Canonie

Located NW of Site

Observation Well Details

PROJECT No. 87-126-01

WELL No. L-1

PROJECT NAME OUTBOARD MARINE CORP., WAUKEGAN HARBOR

WELL LOCATION N 5,409.3 E 3,981.2 DATE 1-31-89 BY KSC

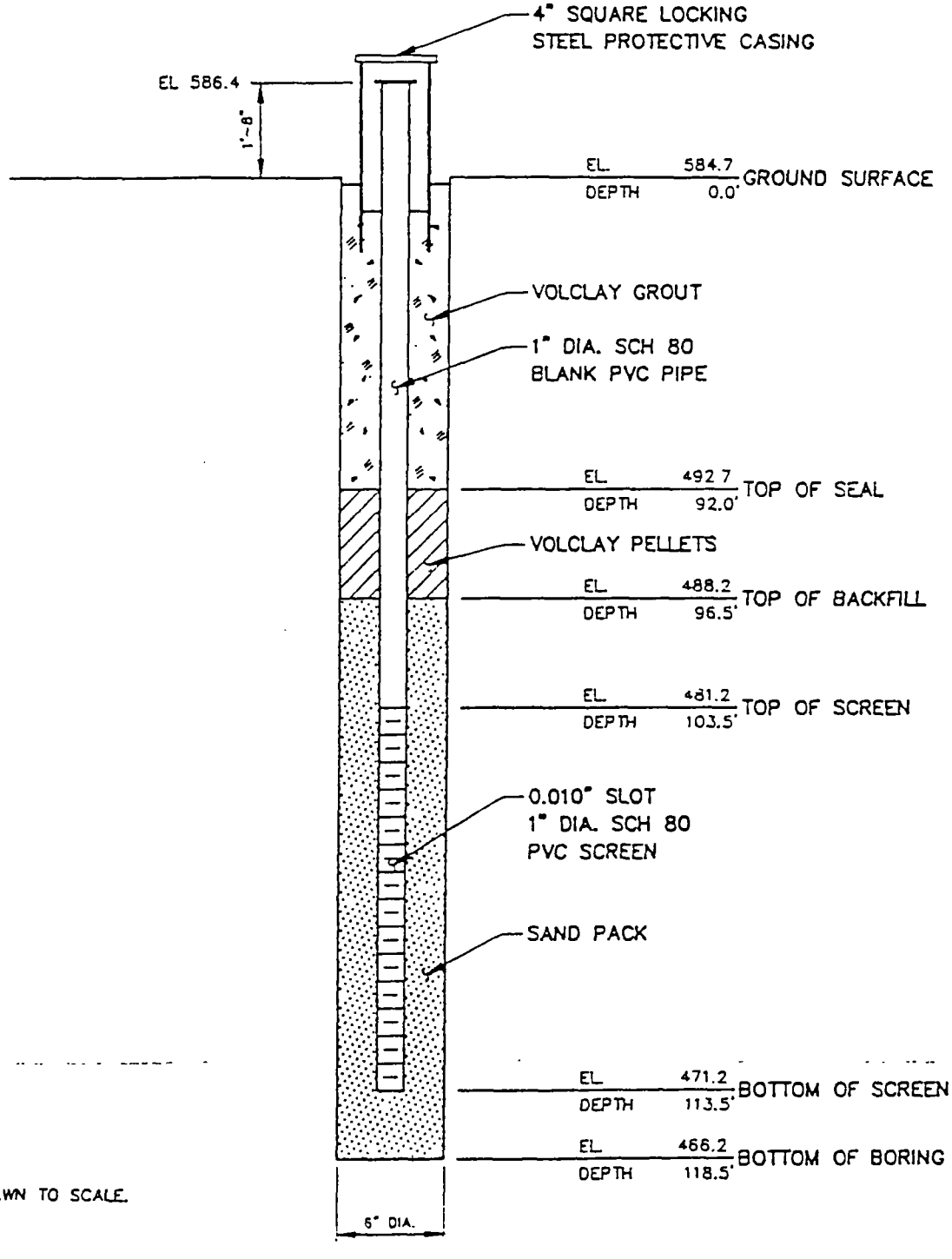

NOTES:

1. NOT DRAWN TO SCALE.

Canonie

Observation Well Details

PROJECT No. 87-126-01

WELL No. L-28

PROJECT NAME OUTBOARD MARINE CORP., WAUKEGAN HARBOR

WELL LOCATION N 5,881.7 E 3,953.6 DATE 1-27-89 BY KSC

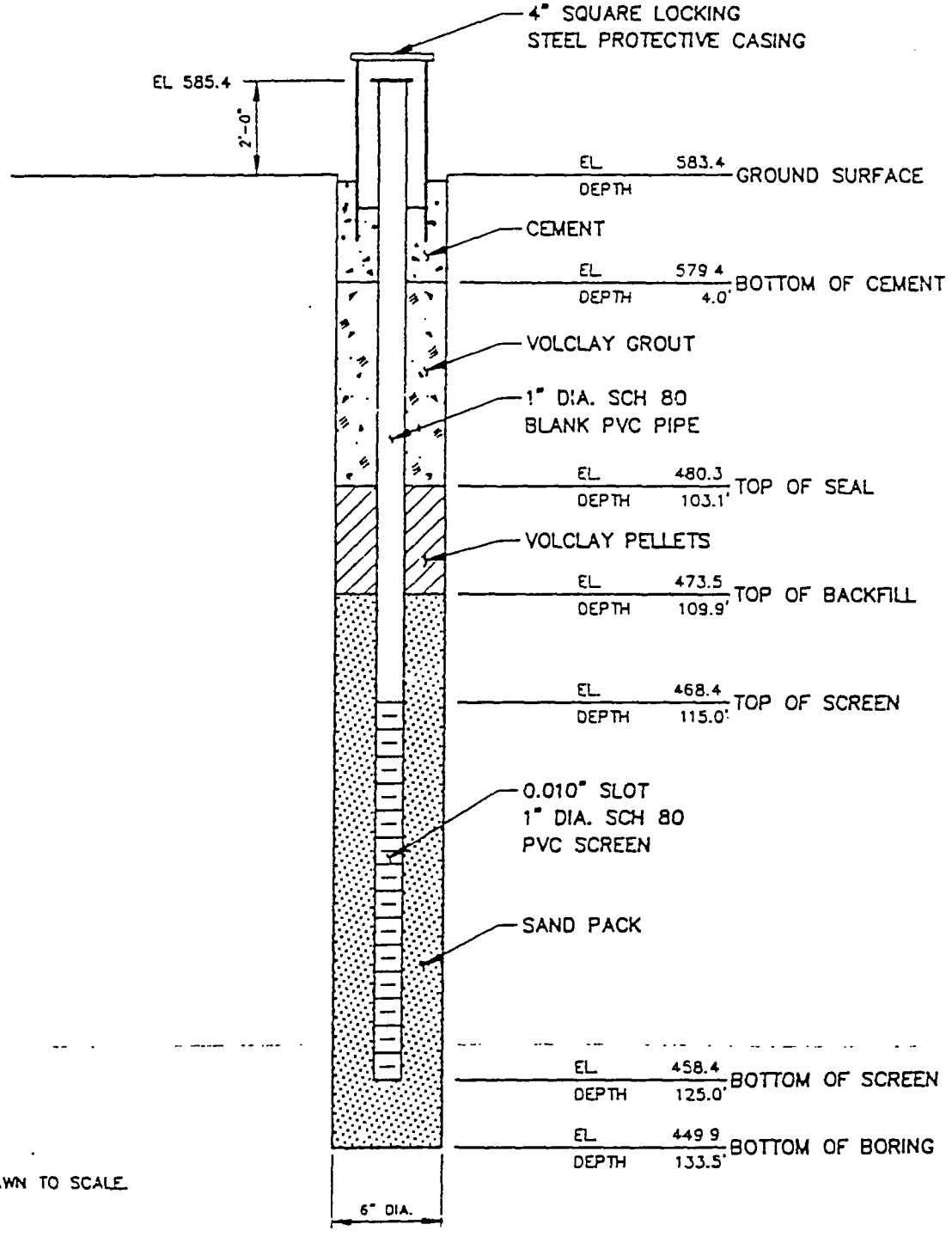

NOTES:

1. NOT DRAWN TO SCALE.

Canonie

Observation Well Details

PROJECT No. 87-126-04

WELL No. MW-1(S)

PROJECT NAME WAUKEGAN HARBOR

WELL LOCATION N 4,417.9 E 5,328.7 DATE 9-21-89 BY TOD

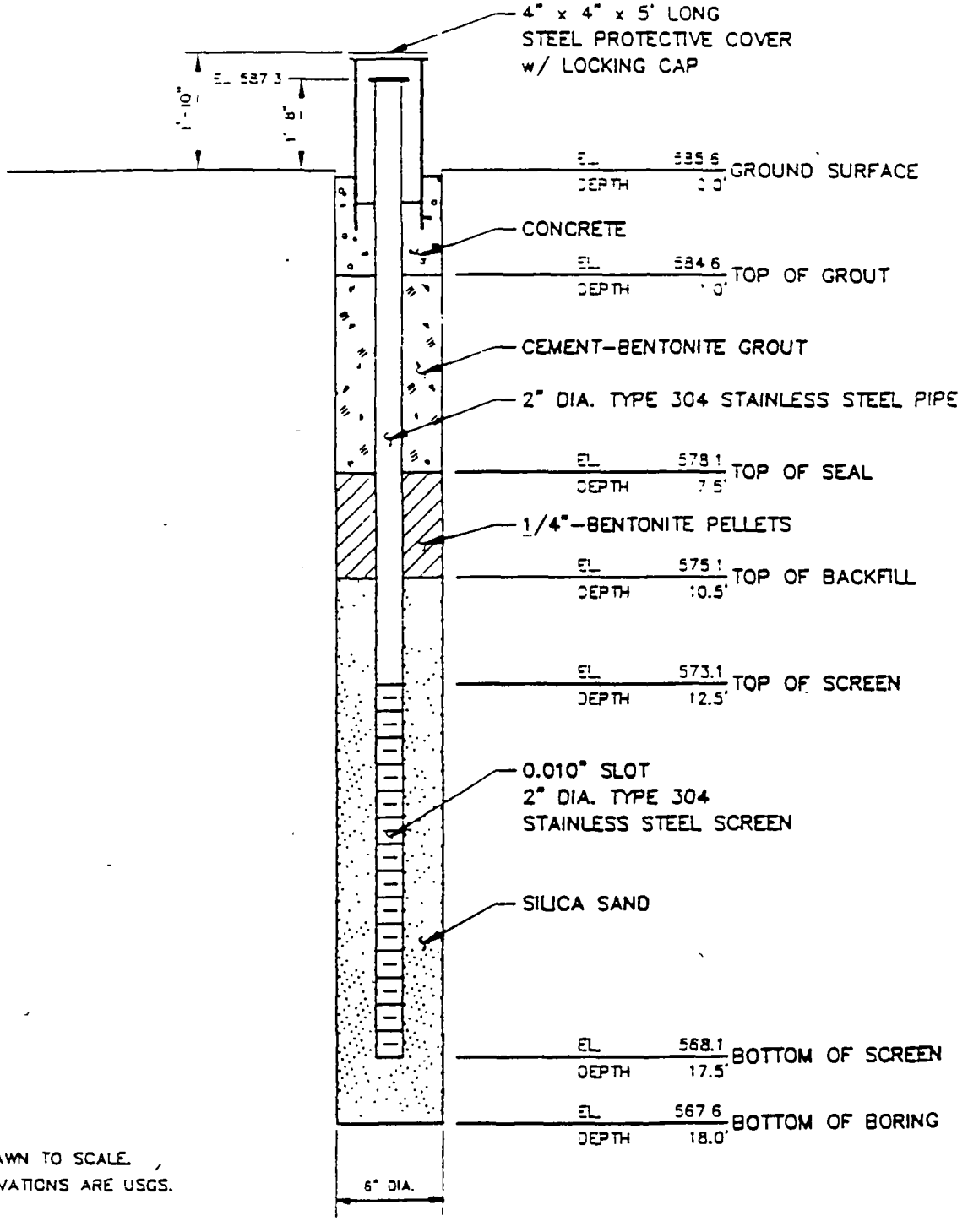

NOTES

1. NOT DRAWN TO SCALE
2. ALL ELEVATIONS ARE USGS.

Canonie

Observation Well Details

PROJECT No. 87-126-04

WELL No. MW-1(D)

PROJECT NAME WAUKEGAN HARBOR

WELL LOCATION N 4,412.6 E 5,326.4 DATE 9-22-89 BY TCD

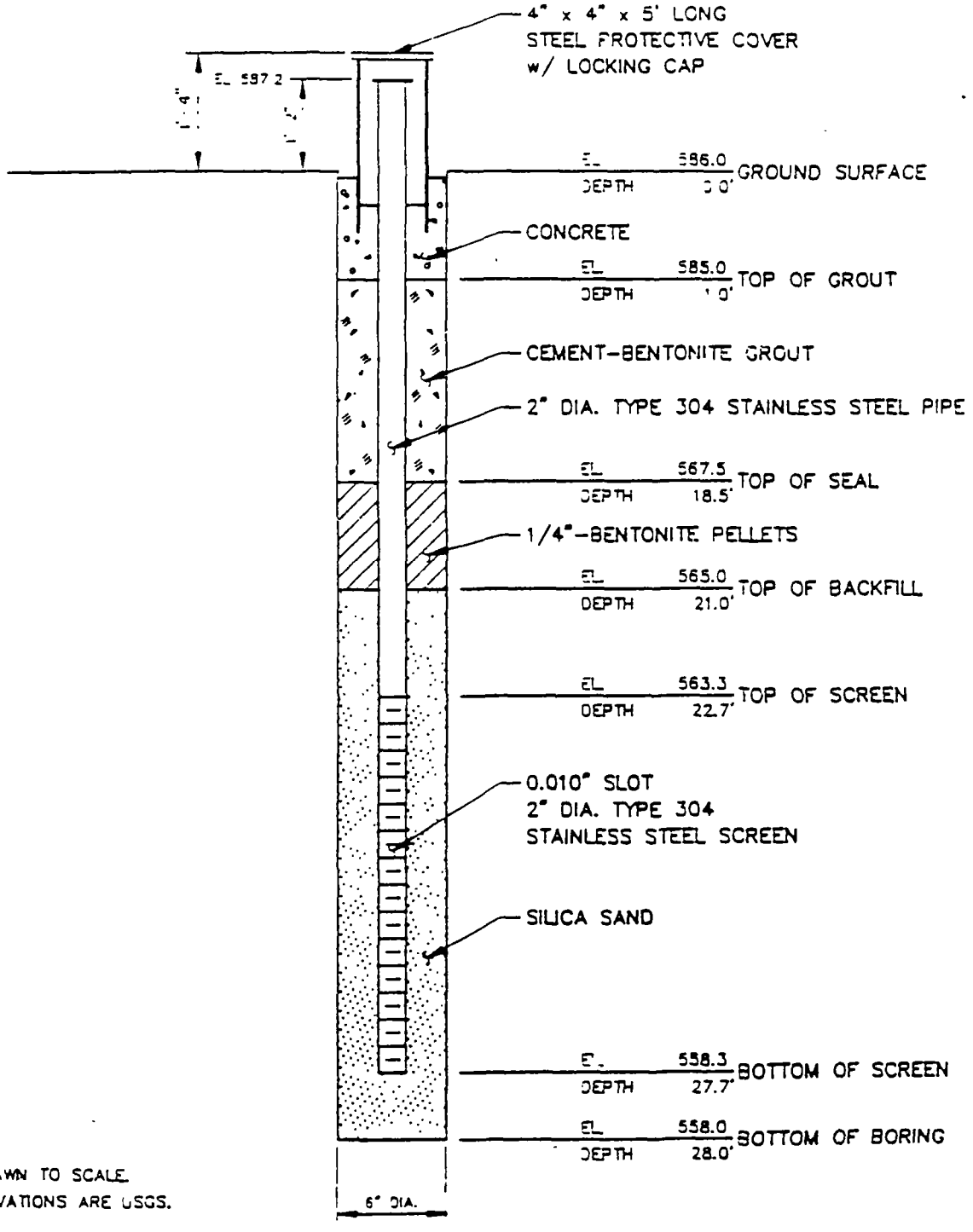

NOTES:

1. NOT DRAWN TO SCALE.
2. ALL ELEVATIONS ARE USGS.

Canonie

Observation Well Details

PROJECT No. 87-126-04

WELL No. MW-2(S)

PROJECT NAME WAUKEGAN HARBOR

WELL LOCATION N 4,609.5 E 5,384.5 DATE 9-25-89 BY TCO

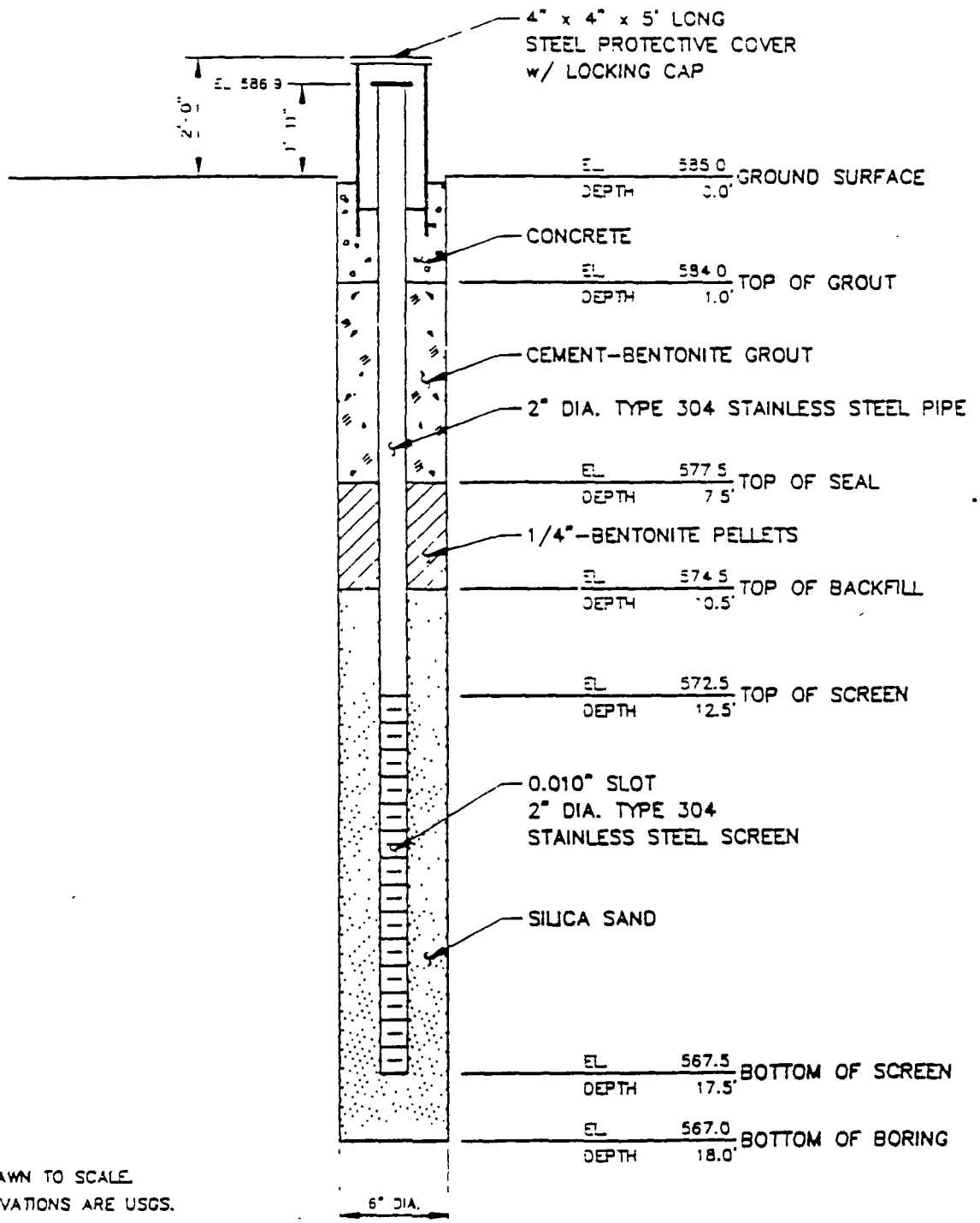

NOTES:

1. NOT DRAWN TO SCALE.
2. ALL ELEVATIONS ARE USGS.

Canonie

Observation Well Details

PROJECT No. 87-126-04

WELL No. MW-2(D)

PROJECT NAME WAUKEGAN HARBOR

WELL LOCATION N 4,615.0 E 5,385.4 DATE 9-25-89 BY TCD

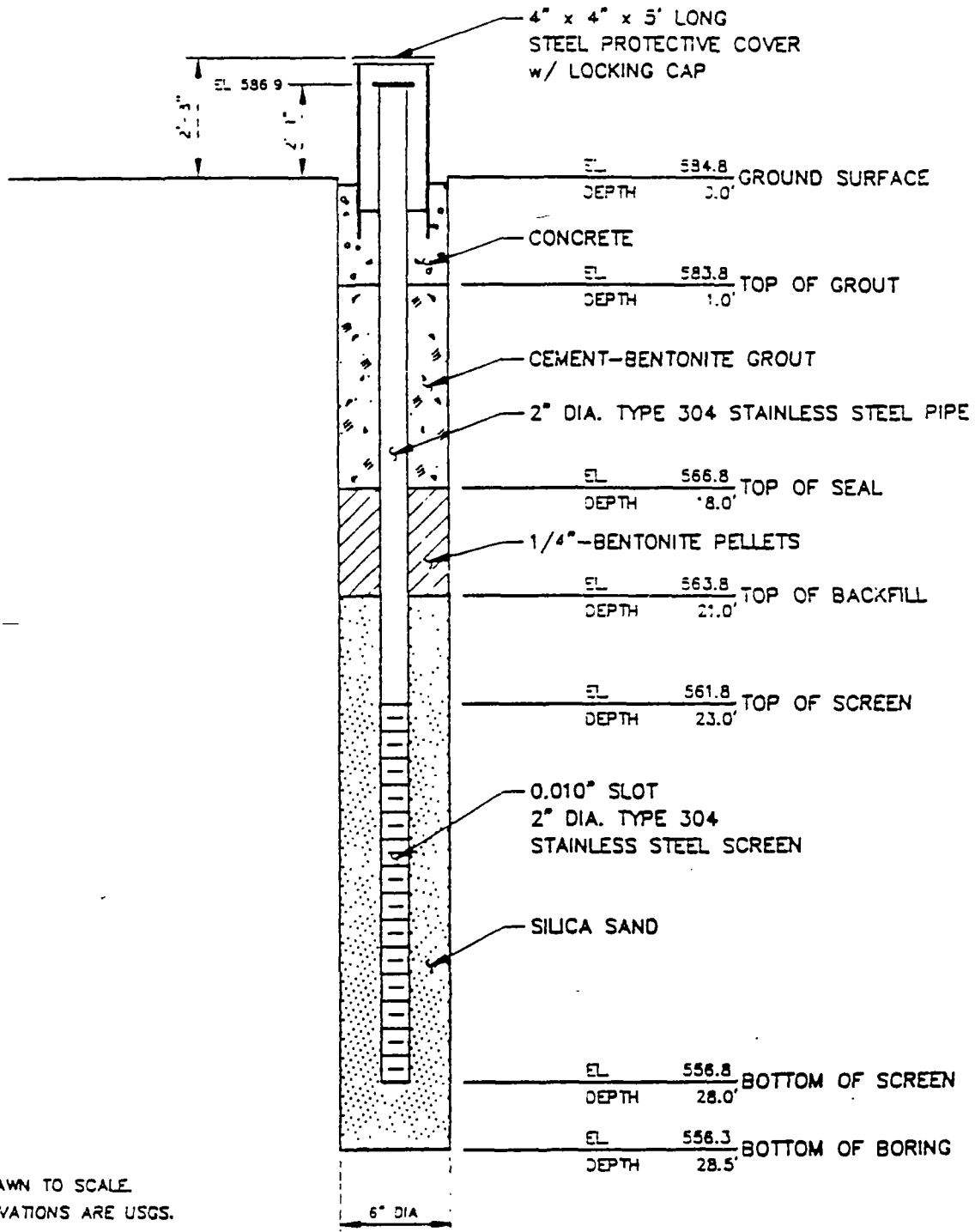

NOTES:

1. NOT DRAWN TO SCALE.
2. ALL ELEVATIONS ARE USGS.

SUMMARY OF BAILDOWN HYDRAULIC CONDUCTIVITY TESTS[1]

WELL	SCREENED INTERVAL (FT BGS*)	LITHOLOGY OF SCREENED INTERVAL	HYDRAULIC CONDUCTIVITY (CM/SEC)
1	3.4 - 8.4	Sand with silt and gravel	7.8×10^{-4}
2A	3.3 - 8.3	Sand	--
2B	17.5 - 19.5	Sand with silt	6.1×10^{-3}[2]
2C	29.5 - 31.5	Silt	2.1×10^{-4}
3	6.6 - 11.6	Sand with silt	2.1×10^{-4}
4A	3.0 - 8.3	Sand with silt and gravel	1.2×10^{-3}
4B	17.3 - 19.3	Sand with silt	1.3×10^{-3}[2]
4C	24.3 - 26.3	Sand with silt	2.7×10^{-3}[2]
5	3.7 - 8.7	Sand	1.7×10^{-3}
6	4.3 - 9.3	Sand	1.2×10^{-3}
7A	3.3 - 8.3	Sand with silt and gravel	--
7B	13.6 - 15.6	Sand with silt and gravel	1.8×10^{-3}
7C	20.3 - 22.3	Sand with silt and gravel	7.7×10^{-3}
8	3.4 - 8.4	Sand with silt	4.0×10^{-4}
9	3.3 - 8.3	Sand with silt and gravel	2.0×10^{-4}
10	2.5 - 7.5	Sand with silt and clay	3.5×10^{-3}
11A	4.8 - 9.8	Sand	4.9×10^{-3}
11B	13.0 - 15.5	Sand	2.7×10^{-3}
11C	24.5 - 27.0	Sand	2.1×10^{-3}
12	2.0 - 7.0	Sand	1.3×10^{-3}
13	5.0 - 10.0	Sand with silt	1.0×10^{-3}
14	4.5 - 9.5	Sand	9.3×10^{-4}

[1]Information taken from OMC Technical and Witnessing Case Support, Hydrogeological Study of Groundwater, Final Report, 1981, JRB & Associates; and Hydrogeologic Investigation, Outboard Marine Corporation, Waukegan Illinois, 1979, Warzyn Engineering, Inc.; and Subsurface Investigation, North Ditch Area, Outboard Marine Corporation, Waukegan, Illinois, 1980.

[2]Average of two measurements given in JRB Report, 1981.

*Below ground surface.

-- No measurement.

13\49\003\SUM.TAB\CRS

JRB Water Level Mea

SUMMARY OF WATER LEVEL ELEVATIONS FROM JRB REPORT[1]

WELL	WATER LEVEL ELEVATION (FT/MSL)														
	1979									1980					
	7/25	7/26	7/27	8/14	8/30	9/05	9/11	9/20	9/25	6/17	6/24	6/26	7/01	7/08	7/15
1	581.33	581.79	581.82	582.55	582.61	582.18	582.26	581.95	581.87	582.06	581.80	581.71	581.64	581.86	581.65
2A	581.70	581.97	581.47	581.79	581.45	581.58	582.87	582.28	581.36	581.60	581.42	581.14	581.41	581.41	581.93
2B	581.75	581.99	581.52	581.83	581.44	581.76	582.84	582.23	581.35	581.62	581.43	581.13	581.44	581.38	581.69
2C	581.75	581.98	581.53	581.91	581.48	581.76	582.86	582.28	581.37	581.61	581.48	581.15	581.44	581.34	581.71
3	581.71	581.94	581.58	583.06	583.00	581.89	582.98	582.23	581.30	582.92	583.20	581.05	581.40	582.98	581.59
4A	579.78	579.82	579.36	581.92	581.65	581.82	582.95	582.33	581.43	581.75	581.59	581.33	581.54	581.47	581.54
4B	581.85	582.01	581.55	581.92	581.61	581.90	582.98	582.32	581.42	581.75	581.57	581.34	581.54	581.50	581.55
4C	581.77	581.95	581.50	581.91	581.60	581.78	582.94	582.32	581.45	581.78	581.61	581.34	581.54	581.50	581.75
5	582.20	582.23	582.23	583.46	585.59	585.07	583.38	582.80	583.74	585.17	583.69	583.56	582.51	582.39	582.22
6	581.76	581.79	581.78	582.14	581.99	582.03	582.55	582.03	581.83	581.98	581.12	581.77	581.73	581.81	581.75
7A	--	582.10	581.67	582.10	582.14	582.12	583.01	582.37	581.73	582.09	581.82	581.78	581.73	581.73	581.55
7B	--	582.12	581.71	582.08	582.17	582.11	582.98	582.35	581.71	582.05	581.85	581.76	581.77	581.70	581.69
7C	--	--	581.62	582.08	582.14	582.04	583.00	582.34	581.69	582.09	581.88	581.80	581.77	581.73	581.69
8	584.11	584.07	584.07	585.64	585.39	587.06	586.18	585.01	584.68	585.95	585.65	585.53	585.27	585.50	584.77
9	582.63	584.95	584.98	584.28	584.89	585.18	584.03	583.39	583.16	584.45	584.10	583.95	583.53	583.21	582.87
10	--	--	--	--	--	--	--	--	--	581.65	--	581.28	581.48	581.52	581.72
11A	--	--	--	--	--	--	--	--	--	581.91	581.64	581.56	581.57	581.61	581.50
11B	--	--	--	--	--	--	--	--	--	581.99	581.65	581.56	581.57	581.68	581.51
11C	--	--	--	--	--	--	--	--	--	581.94	581.62	581.56	581.57	581.61	581.54
12	--	--	--	--	--	--	--	--	--	582.14	581.84	581.76	581.68	581.87	581.53
13	--	--	--	--	--	--	--	--	--	582.19	581.91	581.87	581.79	581.96	581.69
14	--	--	--	--	--	--	--	--	--	582.20	581.85	581.92	581.83	581.93	581.93

[1]OMC Technical and Witnessing Case Support, Hydrogeological Study of Groundwater, Final Report, 1981.

-- Measurement not taken.

87-126-B109

BORING No.	SAMPLE No.	DEPTH FROM	DEPTH TO	UNIFIED SOIL CLASS	% PASSING No 10	% PASSING No 40	% PASSING No 200	% GRAVEL 50 8–4 75 mm	% SAND 4 75– 075 mm	LIQUID LIMIT (LL)	PLASTIC LIMIT (PL)	PLASTICITY INDEX (PI)	NATURAL WATER CONTENT(%)
S–5	4	18 5'	20 0'	SP	95	88	2	5	93	–	–	–	25 4
S–5	6	25.0'	27 0'	CL–ML	99	98	96	0	4	23.2	18 1	5 1	14 8
S–7	3	13.5'	15 0'	SP	100	97	4	0	96	–	–	–	23 3
S–8	7	26 0'	27 9'	CL	93	86	76	4	20	24 5	16 0	8 5	13 3
S–9	4	18.5'	20.0'	SM	100	99	15	0	85	–	–	–	26 6
S–9	5	22.5'	24.0'	ML	90	83	70	5	25	20.3	19 0	1 3	11 5
S–10	2	8 5'	10 0'	SP	71	59	2	21	77	–	–	–	13 9
S–10	5	22.5'	24 5'	CL	89	81	67	7	26	25 7	16.8	8 9	11 8
S–14	5	25 0'	27 0'	SP	100	99	8	0	92	–	–	–	24 2
S–14	6	30 0'	32 0'	CL	100	96	90	0	10	23 3	14 9	8 4	12 5
S–17	4	20.0'	22 0'	SP	100	99	12	0	88	–	–	–	22 9
S–17	6	30 0'	32.0'	CL–ML	99	98	92	0	3	24.3	18 4	5 9	14 2
S–20	2	9 5'	11 5'	SP	99	91	4	0	96	–	–	–	22 2
S–20	8	34 0'	35 9'	CL–ML	92	84	69	4	27	16.2	11 5	4.7	8 9
S–23	3	15 0'	17 0'	SP	100	100	9	0	91	–	–	–	21.1
S–23	6	30 0'	32.0'	CL	99	98	95	1	4	23 5	16 0	7 5	11 1
S–25	3	15 0'	17.0'	SP	100	100	10	0	90	–	–	–	20 2
S–25	5	24 0'	25 8'	CL	99	97	95	1	4	23 0	13 9	9.1	11 1
S–27	3	13 9'	15 0'	SP	95	87	5	0	95	–	–	–	22 5
S–27	5	25 0'	26 5'	CL–ML	98	96	92	1	7	23 5	17 0	6 5	12 8
S–28	2	9 5'	11 5'	SP	97	89	6	1	93	–	–	–	19 7
S–28	5	23 0'	25 0'	CL	99	98	96	0	4	24 0	16 9	7 1	13 6
S–30	4	20 0'	22.0'	SP	100	100	11	0	89	–	–	–	24 6
S–30	7	28 0'	29 8'	ML	100	99	98	0	2	–	NP	–	15 7
FORT SHERIDAN/BORROW PIT				CL	–	–	77	–	–	24 6	14 4	10 2	–
DEER VALLEY LANDFILL/BORROW PIT				CL	–	–	77	–	–	31 0	15 5	15 5	–

PROJECT: WAUKEGAN HARBOR, OMC
PROJECT No.: 87-126-02
DATE: 9-20-89
COMPILED BY: K CHIRBAS
CHECKED BY: _____
APPROVED BY:

SUMMARY OF
LABORATORY PHYSICAL SOIL TEST RESULTS
WAUKEGAN HARBOR
WAUKEGAN, ILLINOIS

CanonieEnvironmental

CANONIE HYDRAULIC CONDUCTIVITY ESTIMATES[1]

BORING	DEPTH INTERVAL (FT)	UNIT	LITHOLOGY	PARAMETER[2]	METHOD	RESULTS	
						FT/DAY	CM/SEC
S-9	24.0	Till	ML	K_V	Falling Head	7.7×10^{-4}	2.7×10^{-7}
						2.4×10^{-4}	8.3×10^{-8}
						3.4×10^{-4}	1.2×10^{-7}
						1.7×10^{-3}	6.1×10^{-7}
S-15B	30.5	Till	GP/CL	K_V	Falling Head	7.94	2.8×10^{-3}
						8.9×10^{-4}	3.1×10^{-7}
S-27	26.5	Till	CL	K_V	Falling Head	7.4×10^{-4}	2.6×10^{-7}
						3.4×10^{-4}	1.2×10^{-7}
S-5	25.0 - 28.0	Till	CL	K_H	Falling Head	7.7×10^{-4}	2.7×10^{-7}
						3.4×10^{-4}	1.2×10^{-7}
						2.8×10^{-4}	1.0×10^{-7}
S-10	23.5 - 26.5	Till	CL	K_H	Falling Head	9.9×10^{-4}	3.5×10^{-7}
S-18	29.5 - 32.5	Till	CL	K_H	Falling Head	3.4×10^{-4}	1.2×10^{-7}
						2.8×10^{-4}	1.0×10^{-7}
S-24	31.0 - 34.0	Till	CL	K_H	Falling Head	2.0×10^{-4}	7.0×10^{-8}
						4.8×10^{-4}	1.7×10^{-7}
						6.5×10^{-4}	2.3×10^{-7}
S-31	27.5 - 30.5	Till	CL	K_H	Falling Head	4.0×10^{-4}	1.4×10^{-7}
S-32	27.5 - 30.5	Till	CL	K_H	Falling Head	4.8×10^{-4}	1.7×10^{-7}
						8.5×10^{-4}	3.0×10^{-7}
						1.6×10^{-4}	5.5×10^{-8}
S-5	18.5 - 20.0	Sand	SP	K_H	Hazen (Grain Size Distribution)	40	[3,4] 1.41×10^{-2}
S-7	13.5 - 15.0	Sand	SP				
S-9	18.5 - 20.0	Sand	SM				
S-10	8.5 - 10.0	Sand	SP				
S-14	25.0 - 27.0	Sand	SP	K_H	Hazen (Grain Size Distribution)	19	[3,5] 0.67×10^{-2}
S-17	20.0 - 22.0	Sand	SP				
S-20	9.5 - 11.5	Sand	SP				
S-23	15.0 - 17.0	Sand	SP				

CANONIE HYDRAULIC CONDUCTIVITY ESTIMATES[1]

BORING	DEPTH INTERVAL (FT)	UNIT	LITHOLOGY	PARAMETER[2]	METHOD	RESULTS	
						FT/DAY	CM/SEC
S-25	15.0 - 17.0	Sand	SP	K_H	Hazen (Grain Size Distribution)	18	[3,6]0.63×10^{-2}
S-27	13.5 - 15.0	Sand	SP				
S-28	9.5 - 11.5	Sand	SP				
S-30	20.0 - 22.0	Sand	SP				

[1]All data from Appendices D, E, G of Design and Analysis Report, Canonie Environmental, 1989 and 1990b.

[2]K_V = Vertical Hydraulic Conductivity; K_H = Horizontal Hydraulic Conductivity.

[3]Hydraulic conductivity reportedly determined by using average of four D_{10} (D_{10} = particle diameter at 10 percent finer by weight) values, one value for each boring interval tested.

[4]Slip No. 3 area borings.

[5]East containment cell area borings.

[6]West containment cell area borings.

Appendix 3-B

Waukegan Harbor Superfund Site
Soil Quality Data

TABLE 3B-1

SOIL QUALITY DATA
CANONIE ENVIRONMENTAL
INORGANIC COMPOUNDS

(concentrations in mg/kg)

	1
	S2
	20'-22'

	01/13/89
Arsenic, total	14
Cyanide, total	--
Aluminum	--
Antimony	--
Barium	2 5
Beryllium	--
Cadmium	0.5
Calcium	--
Chromium, total	2.1
Cobalt	--
Copper	--
Iron	--
Lead	2 9
Magnesium	--
Manganese	--
Mercury	<0 010
Nickel	--
Potassium	--
Selenium	<0 50
Silver	<0 2
Sodium	--
Thallium	--
Vanadium	--
Zinc	--

-- Not analyzed

1 Data source OMC 1990a, CBC Chemical Analytical report

.008

04/05/94

TABLE 3B-1 (cont.)

SOIL QUALITY DATA
CANONIE ENVIRONMENTAL
INORGANIC COMPOUNDS

(concentrations in mg/kg)

	1 SS4402 15' 07/01/89	1 SS4603 23.5' 07/01/89 Sample	07/01/89 Duplicate	1 SS4803 23 5' 07/01/89	1 SS4903 23.5' 07/01/89	1 SS59 24' 07/01/89	1 SS6002 15' 07/01/89
Arsenic, total	3 8	29 9	9 1	10 3	10 0	4.2	5 3
Cyanide, total	0 68 U	0 54 U	0 71 U	0 67 U	0.60 U	--	0 71 U
Aluminum	1380	2930	2270	1950	1880	1400	1510
Antimony	22 5	23.8	19 7	16 3	19 6	17.6	15 4
Barium	5 2 B	8 7 B	6 2 B	4.8 B	6.0 B	5.2 B	5 7 B
Beryllium	0.12 B	0.18 B	0.17 B	0 14 B	0 11 B	0 12 B	0 09 B
Cadmium	0.34 U	0.31 U	0.38 U	0.36 U	0 38 U	0 39 U	0 35 U
Calcium	78100	94200	76100	72800	75600	67500	58500U
Chromium, total	3 9	5 2	4 7	4.0	3 9	5 4	5 6
Cobalt	4 2 U	5 1 B	7 9 B	4.4 U	4 7 U	4 8 U	10 8
Copper	33 9	1460	195	112	1420	357	29 0
Iron	4450	15100	4860	4130	4170	5530	5990
Lead	2.3	4.4	3.8	3.1	2 6	2 4	2 7
Magnesium	41300	53200	34900	34300	37800	34700	28900
Manganese	198	440	217	204	196	183	184
Mercury	0 12 U	0.11 U	0.09 U	0.10 U	0 10 U	0 10 U	0 08 U
Nickel	2 4 B	11 7	3.9 B	3 7 B	2 6 B	3 5 U	3 2 B
Potassium	131 U	359 B	384 B	221 B	274 B	181 U	199 B
Selenium	0 38 B	0 60 B	0.68 B	0 25 U	0 24 U	0 37 B	0 55 B
Silver	0 48 U	0 42 U	0 52 U	0 48 U	0 52 U	0.52 U	0.47 U
Sodium	202 B	288 B	245 B	256 B	248 B	208 B	201 B
Thallium	0.24 U	0.12 B	0.24 U	0.25 U	0.24 U	0.24 B	0 24 U
Vanadium	13 9	8.9 B	6.9 B	6.5 B	8 2 B	22 1	21 9
Zinc	31 9	405	152	74 9	528	160	28 4

B The reported value is less than the Contract Required Detection Limit (CRDL) but greater than or equal to the Instrument Detection Limit (IDL)
U Not detected
1 Data source OMC 1990a, Table M-1

TABLE 3B-1 (cont.)

SOIL QUALITY DATA
CANONIE ENVIRONMENTAL
INORGANIC COMPOUNDS

(concentrations in mg/kg)

	1		1	2	2	2
	SS6402 15'		SS7003 24'	NS01-O 0-1'	NS01-OD 0-1'	NS02-O 0-1'
	07/01/89 Sample	07/01/89 Duplicate	07/01/89	04/30/91	04/30/91	04/30/91
Arsenic, total	4 7	4 6	6 6	3 5	3 1	2 3
Cyanide, total	0 67 U	0.67 U	0 68 U	<0 5	<0 5	<0 5
Aluminum	1550	1631	4470	--	--	--
Antimony	16 0	17 6	16 7	<10	<10	<10
Barium	5 3 B	5 1 B	6 7 B	--	--	--
Beryllium	0 15 B	0 12 B	0 16 B	<0.5	<0 5	<0.5
Cadmium	0 38 U	0 37 U	0 40 U	<0.5	<0 5	<0.5
Calcium	57800	59000	70500	--	--	--
Chromium, total	7 0	6 3	5.0	5	4	3
Cobalt	7 8 B	11 5	8.2 B	--	--	--
Copper	55.5	83 7	498	2	3	<2
Iron	8160	7222	5600	3500	3300	2800
Lead	2.9	2 8	4.1	2 5	2 0	1 4
Magnesium	29000	29100	33800	--	--	--
Manganese	182	180	224	--	--	--
Mercury	0 08 U	0 11 U	0.08 U	<0 1	<0 1	<0.1
Nickel	3 7 B	4.1 B	3.7 B	3	2	2
Potassium	217 B	200 B	372 B	--	--	--
Selenium	1 2	1.1 B	1 9	<0.2	<0 2	0.2
Silver	0 52 U	0.51 U	0.54 U	<2	<2	<2
Sodium	215 B	190 B	221 B	--	--	--
Thallium	0 09 B	0 14 B	0.28 B	<0 25	<0 25	<0 25
Vanadium	35 4	28 7	10.4 B	--	--	--
Zinc	44.6	57 7	235	18	14	13

-- Not analyzed
B The reported value is less than the Contract Required Detection Limit (CRDL) but greater than or equal to the Instrument Detection Limit (IDL).
U Not detected.
1 Data source OMC 1990a, Table M-1
2 Data source Canonie August 1991, Table 9

008
04/05/94

TABLE 3B-1 (cont.)

SOIL QUALITY DATA
CANONIE ENVIRONMENTAL
INORGANIC COMPOUNDS

(concentrations in mg/kg)

	2 SNS03 0-1' 04/30/91	2 SNS04 0-1' 05/02/91
Arsenic, total	3.5	15
Cyanide, total	<0 5	<0.5
Aluminum	--	--
Antimony	<10	<10
Barium	--	--
Beryllium	<0.5	<0 5
Cadmium	<0 5	<0.5
Calcium	--	--
Chromium, total	2	4
Cobalt	--	--
Copper	<2	2
Iron	1700	3600
Lead	0.9	<10
Magnesium	--	--
Manganese	--	--
Mercury	<0.1	<0.25
Nickel	<2	3
Potassium	--	--
Selenium	0 4	0 2
Silver	<2	<2
Sodium	--	--
Thallium	<0 25	<0.25
Vanadium	--	--
Zinc	9 4	22

-- Not analyzed.
2 Data source Canonie August 1991, Table 9

TABLE 3B-2

SOIL QUALITY DATA
CANONIE ENVIRONMENTAL
VOLATILE ORGANIC COMPOUNDS

(concentrations in ug/kg)

	1
	S2
	20'-22'

	01/13/89
BETX COMPOUNDS	
Benzene	2
Ethyl Benzene	3
Toluene	8
Xylenes	--
Sum of BETX	13
CHLORINATED COMPOUNDS	
Bromodichloromethane	<1
Carbon Tetrachloride	<1
Chloroethane	<1
Chloroform	<1
Chloromethane	<1
Chlorobenzene	<1
Chlorodibromomethane	<1
1,1-Dichloroethane	<1
1,2-Dichloroethane	<1
1,1-Dichloroethylene	<1
1,2-Dichloroethylene	--
1,2-Dichloropropane	<1
Cis-1,3-Dichloro-1-propene	--
Trans-1,3-Dichloro-1-propene	--
Ethyl Benzene	3
Methylene Chloride	<1
Styrene	--
1,1,2,2-Tetrachloroethane	<1
Tetrachloroethylene	<1
1,1,1-Trichloroethane	<1
1,1,2-Trichloroethane	<1
Trichloroethylene	<1
Vinyl Chloride	55
OTHER COMPOUNDS	
Acetone	--
Bromoform	<1
Bromomethane	<1
Carbondisulfide	--
2-Hexanone	--
Methyl Ethyl Ketone	--
Methyl Isobutyl Ketone	--

-- Not analyzed.

1 Data source: OMC 1990a, CBC Chemical Analytical report.

.008

04/05/94

TABLE 3B-2 (cont.)

SOIL QUALITY DATA
CANONIE ENVIRONMENTAL
VOLATILE ORGANIC COMPOUNDS

(concentrations in ug/kg)

	1
	SS59
	24'

	07/01/89
BETX COMPOUNDS	
Benzene	69
Ethyl Benzene	89
Toluene	94
Xylenes	61
Sum of BETX	310
CHLORINATED COMPOUNDS	
Bromodichloromethane	22 U
Carbon Tetrachloride	22 U
Chloroethane	44 U
Chloroform	22 U
Chloromethane	44 U
Chlorobenzene	22 U
Chlorodibromomethane	22 U
1,1-Dichloroethane	22 U
1,2-Dichloroethane	22 U
1,1-Dichloroethylene	22 U
1,2-Dichloroethylene	22 U
1,2-Dichloropropane	22 U
Cis-1,3-Dichloro-1-propene	22 U
Trans-1,3-Dichloro-1-propene	22 U
Ethyl Benzene	89
Methylene Chloride	31 B
Styrene	24
1,1,2,2-Tetrachloroethane	22 U
Tetrachloroethylene	22 U
1,1,1-Trichloroethane	22 U
1,1,2-Trichloroethane	22 U
Trichloroethylene	22 U
Vinyl Chloride	44 U
OTHER COMPOUNDS	
Acetone	44 U
Bromoform	22 U
Bromomethane	44 U
Carbondisulfide	22 U
2-Hexanone	44 U
Methyl Ethyl Ketone	44 U
Methyl Isobutyl Ketone	44 U

-- Not analyzed
B The analyte is found in the associated blank as well as the sample
U Not detected
1 Data source OMC 1990a, Table V-1

008
04/05/94

TABLE 3B-2 (cont.)

SOIL QUALITY DATA
CANONIE ENVIRONMENTAL
VOLATILE ORGANIC COMPOUNDS

(concentrations in ug/kg)

	1	1	2	2	2
	SS6402	SS7003	NS01-O	NS01-OD	NS02-O
	15'	24'	0-1'	0-1'	0-1'
	07/01/89	07/01/89	04/30/91	04/30/91	04/30/91
BETX COMPOUNDS					
Benzene	210	600	6 U	6 U	6 U
Ethyl Benzene	15 J	25 U	6 U	6 U	6 U
Toluene	110	190	7	4 J	6 U
Xylenes	64	25 U	6 U	6 U	6 U
Sum of BETX	400 a	790	7	4 a	ND
CHLORINATED COMPOUNDS					
Bromodichloromethane	20 U	25 U	--	--	--
Carbon Tetrachloride	20 U	25 U	--	--	--
Chloroethane	40 U	49 U	--	--	--
Chloroform	20 U	25 U	--	--	--
Chloromethane	40 U	49 U	--	--	--
Chlorobenzene	20 U	25 U	--	--	--
Chlorodibromomethane	20 U	25 U	--	--	--
1,1-Dichloroethane	20 U	25 U	--	--	--
1,2-Dichloroethane	20 U	25 U	--	--	--
1,1-Dichloroethylene	20 U	25 U	--	--	--
1,2-Dichloroethylene	20 U	25 U	--	--	--
1,2-Dichloropropane	20 U	25 U	--	--	--
Cis-1,3-Dichloro-1-propene	20 U	25 U	--	--	--
Trans-1,3-Dichloro-1-propene	20 U	25 U	--	--	--
Ethyl Benzene	15 J	25 U	6 U	6 U	6 U
Methylene Chloride	33 B	58 B	88	17	16
Styrene	36	18 J	--	--	--
1,1,2,2-Tetrachloroethane	20 U	25 U	--	--	--
Tetrachloroethylene	20 U	25 U	--	--	--
1,1,1-Trichloroethane	20 U	25 U	--	--	--
1,1,2-Trichloroethane	20 U	25 U	--	--	--
Trichloroethylene	20 U	25 U	--	--	--
Vinyl Chloride	40 U	49 U	--	--	--
OTHER COMPOUNDS					
Acetone	67	620	42	84	57
Bromoform	20 U	25 U	--	--	--
Bromomethane	40 U	49 U	--	--	--
Carbondisulfide	20 U	25 U	6 U	6 U	6 U
2-Hexanone	40 U	49 U	--	--	--
Methyl Ethyl Ketone	8 J	66	32	12 U	11 U
Methyl Isobutyl Ketone	40 U	49 U	--	--	--

-- Not analyzed
a Calculated using some or all values that are estimates.
B The analyte is found in the associated blank as well as the sample
J Associated value is qualified as an estimate The value is acceptable and usable
U Not detected.
1 Data source OMC 1990a, Table V-1
2 Data source Canonie August 1991, Table 8

008
04/05/94

TABLE 3B-2 (cont.)

SOIL QUALITY DATA
CANONIE ENVIRONMENTAL
VOLATILE ORGANIC COMPOUNDS

(concentrations in ug/kg)

	2 SNS03 0-1' 04/30/91	2 SNS04 0-1' 05/02/91
BETX COMPOUNDS		
Benzene	6 U	7 U
Ethyl Benzene	6 U	3 J
Toluene	6 U	7 U
Xylenes	6 U	3 J
Sum of BETX	ND	6 a
CHLORINATED COMPOUNDS		
Bromodichloromethane	--	--
Carbon Tetrachloride	--	--
Chloroethane	--	--
Chloroform	--	--
Chloromethane	--	--
Chlorobenzene	--	--
Chlorodibromomethane	--	--
1,1-Dichloroethane	--	--
1,2-Dichloroethane	--	--
1,1-Dichloroethylene	--	--
1,2-Dichloroethylene	--	--
1,2-Dichloropropane	--	--
Cis-1,3-Dichloro-1-propene	--	--
Trans-1,3-Dichloro-1-propene	--	--
Ethyl Benzene	6 U	3 J
Methylene Chloride	220	180
Styrene	--	--
1,1,2,2-Tetrachloroethane	--	--
Tetrachloroethylene	--	--
1,1,1-Trichloroethane	--	--
1,1,2-Trichloroethane	--	--
Trichloroethylene	--	--
Vinyl Chloride	--	--
OTHER COMPOUNDS		
Acetone	120	26 B
Bromoform	--	--
Bromomethane	--	--
Carbondisulfide	6 U	7 U
2-Hexanone	--	--
Methyl Ethyl Ketone	12 U	5 J
Methyl Isobutyl Ketone	--	--

-- Not analyzed
a Calculated using some or all values that are estimates
B The analyte is found in the associated blank as well as the sample.
J Associated value is qualified as an estimate The value is acceptable and usable
U Not detected.
2 Data source Canonie August 1991, Table 8.

.008
04/05/94

TABLE 3B-3

SOIL QUALITY DATA
CANONIE ENVIRONMENTAL
PESTICIDES AND PCBs

(concentrations in ug/kg)

	1
	S2
	20'-22'

	01/13/89
PESTICIDES	
Aldrin	<330
a-BHC	<330
b-BHC	8800
d-BHC	<330
g-BHC (Lindane)	49000
Alpha Chlordane	<3300
Gamma Chlordane	<3300
4,4'-DDD	<3300
4,4'-DDE	<330
4,4'-DDT	<330
Dieldrin	<330
Endosulfan I	<330
Endosulfan II	<330
Endosulfan Sulfate	<330
Endrin	<330
Endrin Aldehyde	<330
Endrin Ketone	<330
Heptachlor	<330
Heptachlor Epoxide	<330
Methyloxyclor	51000
Toxaphene	<3300
PCBs	
PCB-1016	--
PCB-1221	--
PCB-1232	--
PCB-1242	--
PCB-1248	--
PCB-1254	--
PCB-1260	--

-- Not analyzed

1 Data source OMC 1990a, CBC Chemical Analytical report

008

04/05/94

TABLE 3B-3 (cont.)

SOIL QUALITY DATA
CANONIE ENVIRONMENTAL
PESTICIDES AND PCBs

(concentrations in ug/kg)

	SS4402 15' [1]	SS4403 23 5' [1]	SS4603 23 5' [1]		SS4803 23 5' [1]	SS4903 23 5' [1]	SS59 24' [1]	SS6002 15' [1]
	07/01/89	07/01/89	07/01/89 Sample	07/01/89 Duplicate	07/01/89	07/01/89	07/01/89	07/01/89
PESTICIDES								
Aldrin	39 U	19 U	19 U	39 U	20 U	19 U	20 U	39 U
a-BHC	39 U	19 U	19 U	39 U	20 U	19 U	20 U	39 U
b-BHC	39 U	19 U	19 U	39 U	20 U	19 U	20 U	39 U
d-BHC	39 U	19 U	19 U	39 U	20 U	19 U	20 U	39 U
g-BHC (Lindane)	32 U	19 U	16 U	32 U	16 U	19 U	20 U	39 U
Alpha Chlordane	390 U	190 U	190 U	390 U	200 U	190 U	200 U	390 U
Gamma Chlordane	390 U	190 U	190 U	390 U	200 U	190 U	200 U	390 U
4,4'-DDD	77 U	39 U	39 U	77 U	41 U	39 U	40 U	77 U
4,4'-DDE	77 U	39 U	39 U	77 U	41 U	39 U	40 U	77 U
4,4'-DDT	77 U	39 U	39 U	77 U	41 U	39 U	40 U	77 U
Dieldrin	77 U	39 U	39 U	77 U	41 U	39 U	40 U	77 U
Endosulfan I	39 U	19 U	19 U	39 U	20 U	19 U	20 U	39 U
Endosulfan II	77 U	39 U	39 U	77 U	41 U	39 U	40 U	77 U
Endosulfan Sulfate	77 U	39 U	39 U	77 U	41 U	39 U	40 U	77 U
Endrin	77 U	39 U	39 U	77 U	41 U	39 U	40 U	77 U
Endrin Aldehyde	--	--	--	--	--	--	--	--
Endrin Ketone	77 U	39 U	39 U	77 U	41 U	39 U	40 U	77 U
Heptachlor	39 U	19 U	19 U	39 U	20 U	19 U	20 U	39 U
Heptachlor Epoxide	39 U	19 U	19 U	39 U	20 U	19 U	20 U	39 U
Methyloxyclor	390 U	190 U	190 U	390 U	200 U	190 U	200 U	390
Toxaphene	770 U	390 U	390 U	770 U	410 U	390 U	400 U	77(
PCBs								
PCB-1016	390 U	190 U	190 U	390 U	200 U	190 U	200 U	390 U
PCB-1221	390 U	190 U	190 U	390 U	200 U	190 U	200 U	390 U
PCB-1232	390 U	190 U	190 U	390 U	200 U	190 U	200 U	390 U
PCB-1242	390 U	190 U	190 U	390 U	200 U	190 U	200 U	390 U
PCB-1248	390 U	190 U	190 U	390 U	200 U	190 U	200 U	390 U
PCB-1254	770 U	390 U	390 U	770 U	410 U	390 U	400 U	770 U
PCB-1260	770 U	390 U	390 U	770 U	410 U	390 U	400 U	770 U

-- Not analyzed
U Not detected.
1 Data source: OMC 1990a, Table P-1

.008
04/05/94

TABLE 3B-3 (cont.)

SOIL QUALITY DATA
CANONIE ENVIRONMENTAL
PESTICIDES AND PCBs

(concentrations in ug/kg)

	1 SS6402 15' 07/01/89	1 SS7003 24' 07/01/89
PESTICIDES		
Aldrin	19 U	41 U
a-BHC	19 U	41 U
b-BHC	19 U	41 U
d-BHC	19 U	41 U
g-BHC (Lindane)	19 U	41 U
Alpha Chlordane	190 U	410 U
Gamma Chlordane	190 U	410 U
4,4'-DDD	38 U	82 U
4,4'-DDE	38 U	82 U
4,4'-DDT	38 U	82 U
Dieldrin	38 U	82 U
Endosulfan I	19 U	41 U
Endosulfan II	38 U	82 U
Endosulfan Sulfate	38 U	82 U
Endrin	38 U	82 U
Endrin Aldehyde	--	--
Endrin Ketone	38 U	82 U
Heptachlor	19 U	41 U
Heptachlor Epoxide	19 U	41 U
Methyloxyclor	190 U	410 U
Toxaphene	380 U	820 U
PCBs		
PCB-1016	190 U	410 U
PCB-1221	190 U	410 U
PCB-1232	190 U	410 U
PCB-1242	190 U	410 U
PCB-1248	190 U	410 U
PCB-1254	380 U	820 U
PCB-1260	380 U	820 U

-- Not analyzed
U Not detected
1 Data source OMC 1990a, Table P-1

008
04/05/94

TABLE 3B-4

SOIL QUALITY DATA
CANONIE ENVIRONMENTAL
TOTAL ORGANIC CARBON

(concentrations in ug/kg)

	1	1
	S9002	S9102
	15'	15'
	---	---
	07/01/89	07/01/89
Total Organic Carbon	14000	19000

---

1 Data source: OMC 1990c.

021

04/04/94

SUMMARY SEMIVOLATILE ORGANICS RESULTS
NEW SLIP AREA SOIL

SAMPLE INFORMATION											
Boring I.D.	S-101	S-101	S-101	S-101	S-102	S-102	S-102	S-102	S-103	S-104	S-105
Sample I.D.	S-1	S-2	S-3	S-3 DL	S-1	S-2	S-3	S-3 DL	S-A1	S-A1	S-A1
CompuChem I.D.	382883	382885	382886	382886	382891	382893	382894	382894	383097	383080	383763
Sample Depth (ft)	5.0-7.0	15.0-17.0	24.0-26.0	24.0-26.0	5.0-7.0	15.0-17.0	24.0-26.0	24.0-26.0	9 0-11.0	11.0-13.0	9.0-11 0
Sample Date	11/19/90	11/19/90	11/19/90	11/19/90	11/19/90	11/19/90	11/19/90	11/19/90	11/20/90	11/20/90	11/26/90
COMPOUNDS (ug/kg)											
Phenol			57000	130000			40000	79000			
2-Methylphenol			12000	11000		57	8100	7400			
4-Methylphenol			34000	47000		52	30000	33000			
2,4-Dimethylphenol		440	5100	4300		350	3900	2700			
Benzoic Acid			320				310				
Naphthalene									4200	920	140
2-Methylnaphthalene									100	110	
Acenaphthylene	51									68	59
Acenaphthene	980				1100				1500	3600	680
Dibenzofuran									430	2000	1000
Fluorene					52				630	2700	630
Phenanathrene									1400	4800	
Anthracene									42	640	
Di-n-Butylphthalate	46	57	63		58	51	51				
Fluoranthene										1500	
Pyrene										1100	
Benzo (a) Anthracene [c]										430	
Chrysene [c]										500	
bis (2-Ethylhexyl) Phthalate											
Benzo (b) Fluoranthene [c]										58	
Benzo (k) Fluoranthene [c]										58	
Benzo (a) Pyrene [c]										45	
Indeno (1,2,3-cd) Pyrene [c]											
Dibenzo (a,h) Anthracene [c]											
Benzo (g,h,i) Perylene											
Total Phenols	0	440	108100	192300	0	459	82000	122100	0	0	0
Total Carc. PNAs	0	0	0	0	0	0	0	0	0	1091	0
Total Non-Carc. PNAs	1077	57	383	0	1210	51	361	0	8302	17438	2509
Total PNAs	1077	57	383	0	1210	51	361	0	8302	18529	2509

Table 1

SUMMARY SEMIVOLATILE ORGANICS RESULTS
NEW SLIP AREA SOIL
(continued)

SAMPLE INFORMATION											
Boring I.D.	S-105	S-105	S-106	S-106	S-107	S-107	S-108	S-108	S-108	S-109	S-109
Sample I.D.	S-6	S-6 DL	S-A1	S-6	S-A1	S-6	S-A1	S-6	S-6 DL	S-1	S-2
CompuChem I.D.	383770	383770	383383	383387	383758	383765	383388	383389	383389	382896	382898
Sample Depth (ft)	24.0-26.0	24.0-26.0	11.0-13.0	24.0-24.8	9.0-11 0	24.0-26.0	9.0-11.0	24 0-26.0	24 0-26 0	5.0-7.0	15 0-17.0
Sample Date	11/26/90	11/26/90	11/21/90	11/21/90	11/26/90	11/26/90	11/21/90	11/21/90	11/21/90	11/19/90	11/19/90
COMPOUNDS (ug/kg)											
Phenol				26000		140		15000	18000	1100	
2-Methylphenol	360	420		3700		430		5100	5200	45	
4-Methylphenol	8000	11000		20000		8300		36000	55000	290	
2,4-Dimethylphenol	4700	5000		2500		7300		8800	8700		
Benzoic Acid											
Naphthalene			10000	3200	1700		3300	86			540
2-Methylnaphthalene			4200				1300				
Acenaphthylene			130								
Acenaphthene			1500		2600		1200			480	
Dibenzofuran			850		1500		64				
Fluorene			920		510		230				
Phenanathrene											
Anthracene											
Di-n-Butylphthalate										65	60
Fluoranthene											
Pyrene											
Benzo (a) Anthracene [c]											
Chrysene [c]											
bis (2-Ethylhexyl) Phthalate	48						54				
Benzo (b) Fluoranthene [c]											
Benzo (k) Fluoranthene [c]											
Benzo (a) Pyrene [c]											
Indeno (1,2,3-cd) Pyrene [c]											
Dibenzo (a,h) Anthracene [c]											
Benzo (g,h,i) Perylene											
Total Phenols	13060	16420	0	52200	0	16170	0	64900	86900	1435	0
Total Carc. PNAs	0	0	0	0	0	0	0	0	0	0	0
Total Non-Carc. PNAs	48	0	17600	3200	6310	0	6148	86	0	545	600
Total PNAs	48	0	17600	3200	6310	0	6148	86	0	545	600

Table 1

SUMMARY SEMIVOLATILE ORGANICS RESULTS
NEW SLIP AREA SOIL
(continued)

SAMPLE INFORMATION											
Boring I.D.	S-109	S-109	S-110	S-110	S-110	S-110	S-111	S-111	S-111	S-112	S-112
Sample I.D.	S-3	S-3 DL	S-1	S-2	S-3	S-3 DL	S-1	S-2	S-3	S-1	S-2
CompuChem I.D.	382907	382907	382917	382918	382919	382907	383087	383091	383086	383089	383092
Sample Depth (ft)	24.0-26 0	24.0-26 0	5 0-7.0	15 0-17.0	24 0-26.0	24.0-26 0	5.0-7.0	15.0-17.0	24.0-26.0	5.0-7.0	15.0-17 0
Sample Date	11/19/90	11/19/90	11/19/90	11/19/90	11/19/90	11/19/90	11/20/90	11/20/90	11/20/90	11/20/90	11/20/90
COMPOUNDS (ug/kg)											
Phenol	62000	170000			660	720					
2-Methylphenol	13000	14000			950	930					
4-Methylphenol	35000	60000			17000	26000					
2,4-Dimethylphenol	5700	5100		69	3000	2500					
Benzoic Acid					100						
Naphthalene				1400							
2-Methylnaphthalene											
Acenaphthylene			64								
Acenaphthene			1800								
Dibenzofuran											
Fluorene			650								
Phenanathrene			65								
Anthracene			54								
Di-n-Butylphthalate	48		50	49	62						
Fluoranthene			890								
Pyrene			360								
Benzo (a) Anthracene [c]											
Chrysene [c]											
bis (2-Ethylhexyl) Phthalate										42	
Benzo (b) Fluoranthene [c]											
Benzo (k) Fluoranthene [c]											
Benzo (a) Pyrene [c]											
Indeno (1,2,3-cd) Pyrene [c]											
Dibenzo (a,h) Anthracene [c]											
Benzo (g,h,i) Perylene											
Total Phenols	115700	249100	0	69	21610	30150	0	0	0	0	0
Total Carc. PNAs	0	0	0	0	0	0	0	0	0	0	0
Total Non-Carc. PNAs	48	0	3933	1449	162	0	0	0	0	42	0
Total PNAs	48	0	3933	1449	162	0	0	0	0	42	0

Table 1

SUMMARY SEMIVOLATILE ORGANICS RESULTS
NEW SLIP AREA SOIL
(continued)

SAMPLE INFORMATION											
Boring I.D.	S-112	S-114	S-114	S-114	S-114	S-115	S-115	S-115	S-115	S-116	S-116
Sample I.D.	S-3	S-1	S-2	S-3	S-3 DL	S-1	S-2	S-3	S-3 DL	S-1	S-2
CompuChem I.D.	383085	391398	391400	391402	391402	391399	391400	391406	391406	391609	391610
Sample Depth (ft)	24.0-26 0	5.0-7.0	15.0-17.0	25 0-27.0	25.0-27.0	5.0-7.0	15.0-17.0	25.0-27.0	25.0-27.0	5 0-7.0	15 0-16 5
Sample Date	11/20/90	1/3/91	1/3/91	1/3/91	1/3/91	1/3/91	1/3/91	1/3/91	1/3/91	1/4/91	1/4/91
COMPOUNDS (ug/kg)											
Phenol				5300	7700			18000	33000	170	220
2-Methylphenol				1000	1300			3200	3500		120
4-Methylphenol				10000	12000			11000	15000	65	430
2,4-Dimethylphenol				2500	2800			1400	1400		89
Benzoic Acid											
Naphthalene		61	670				490	63			
2-Methylnaphthalene											
Acenaphthylene											
Acenaphthene		560									
Dibenzofuran		86									
Fluorene		1300									
Phenanathrene		900								280	120
Anthracene		290								740	130
Di-n-Butylphthalate											
Fluoranthene		4900								2200	520
Pyrene		3300								1100	380
Benzo (a) Anthracene [c]		380								760	280
Chrysene [c]		400								890	260
bis (2-Ethylhexyl) Phthalate			51	47							
Benzo (b) Fluoranthene [c]		530								920	340
Benzo (k) Fluoranthene [c]		530								920	340
Benzo (a) Pyrene [c]		220								350	140
Indeno (1,2,3-cd) Pyrene [c]		79								130	58
Dibenzo (a,h) Anthracene [c]											
Benzo (g,h,i) Perylene		100								120	
Total Phenols	0	0	0	18800	23800	0	0	33600	52900	235	859
Total Carc. PNAs	0	2139	0	0	0	0	0	0	0	3970	1418
Total Non-Carc. PNAs	0	11497	721	47	0	0	490	63	0	4440	1150
Total PNAs	0	13636	721	47	0	0	490	63	0	8410	2568

Table 1

SUMMARY SEMIVOLATILE ORGANICS RESULTS
NEW SLIP AREA SOIL
(continued)

SAMPLE INFORMATION											
Boring I.D.	S-116	S-116	S-117	S-117	S-117	S-118	S-118	S-118	S-118	S-119	S-119
Sample I.D.	S-3	S-3 DL	S-1	S-2	S-3	S-1	S-1 DL	S-2	S-3	S-1	S-1 DL
CompuChem I.D.	391611	391611	391612	391613	391614	395074	395074	395085	395083	395076	395076
Sample Depth (ft)	25.0-26.5	25.0-26.5	5.0-7.0	15.0-17.0	25.0-26.5	6.0-8.0	6.0-8.0	8.0-10.0	10.0-12.0	6.0-8.0	6.0-8.0
Sample Date	1/4/91	1/4/91	1/4/91	1/4/91	1/4/91	1/23/91	1/23/91	1/23/91	1/23/91	1/23/91	1/23/91
COMPOUNDS (ug/kg)											
Phenol	55			49							
2-Methylphenol	780	910			440						
4-Methylphenol	9300	11000			5500						
2,4-Dimethylphenol	3800	3900			1800						
Benzoic Acid						220				130	
Naphthalene						7400	6900	4600	4500	500	480
2-Methylnaphthalene						270	210	67		60	
Acenaphthylene						53		94		150	160
Acenaphthene						3600	3200	4900	3700	3100	2900
Dibenzofuran						4400	3900	1100	140	2800	2500
Fluorene						4100	3500	930	80	4600	4200
Phenanathrene						1200	1000	160	79	8400	8100
Anthracene						49				1900	2000
Di-n-Butylphthalate										52	100
Fluoranthene	68					100				5200	4800
Pyrene	61					76				3300	2900
Benzo (a) Anthracene [c]	60					52				1200	1000
Chrysene [c]										720	910
bis (2-Ethylhexyl) Phthalate				50		48					
Benzo (b) Fluoranthene [c]										980	910
Benzo (k) Fluoranthene [c]										980	910
Benzo (a) Pyrene [c]										530	490
Indeno (1,2,3-cd) Pyrene [c]										300	290
Dibenzo (a,h) Anthracene [c]										140	140
Benzo (g,h,i) Perylene										340	330
Total Phenols	13935	15810	0	49	7740	0	0	0	0	0	0
Total Carc. PNAs	60	0	0	0	0	52	0	0	0	4850	4650
Total Non-Carc. PNAs	129	0	0	50	0	21516	18710	11851	8499	30532	28470
Total PNAs	189	0	0	50	0	21568	18710	11851	8499	35382	33120

Table 1

SUMMARY SEMIVOLATILE ORGANICS RESULTS
NEW SLIP AREA SOIL
(continued)

SAMPLE INFORMATION											
Boring I.D.	S-119	S-119	S-119	S-119	S-120	S-121	S-122	S-123	S-124	S-125	S-126
Sample I.D.	S-2	S-2 DL	S-3	S-3 DL	S-1	S-1	S-1	S-1	S-1	S-1	S-1
CompuChem I.D.	395084	395084	395082	395082	395089	395086	395090	395088	395091	395071	395347
Sample Depth (ft)	8.0-10.0	8.0-10.0	10.0-12.0	10.0-12.0	4.0-6.0	4.0-6.0	4.0-6.0	4.0-6.0	4.0-6.0	4.0-6.0	5.0-6.5
Sample Date	1/23/91	1/23/91	1/23/91	1/23/91	1/23/91	1/23/91	1/23/91	1/23/91	1/23/91	1/23/91	1/24/91
COMPOUNDS (ug/kg)											
Phenol											
2-Methylphenol											
4-Methylphenol											
2,4-Dimethylphenol											
Benzoic Acid									53	150	
Naphthalene	470	490	1300		73					65	
2-Methylnaphthalene	57		85								
Acenaphthylene	180		820				44			46	470
Acenaphthene	5000	4800	7500	5900	690	670	1300	170	910	490	140
Dibenzofuran	3000	3100	2300	1800	610	94					
Fluorene	5200	5000	4100	3400	690	1100	1700	190	46	120	
Phenanathrene	13000	1300	40000	70000	690	180	130	50	110	140	
Anthracene	3300	3400	15000	21000	55	210	54		53	52	
Di-n-Butylphthalate						45					
Fluoranthene	6100	5700	33000	64000		1100	700	360	370	660	
Pyrene	4500	4400	33000	38000		480	230	190	260	340	
Benzo (a) Anthracene [c]	1300	1300	16000	14000							
Chrysene [c]	1200	1400	15000	17000							
bis (2-Ethylhexyl) Phthalate								48			
Benzo (b) Fluoranthene [c]	1300	1300	18000	16000				46			
Benzo (k) Fluoranthene [c]	1300	1300	18000	16000				46			
Benzo (a) Pyrene [c]	710	690	9000	8300							
Indeno (1,2,3-cd) Pyrene [c]	360	350	4800	4200							
Dibenzo (a,h) Anthracene [c]	150		1300	1600							
Benzo (g,h,i) Perylene	290	290	3600	3600							
Total Phenols	0	0	0	0	0	0	0	0	0	0	0
Total Carc. PNAs	6320	6340	82100	77100	0	0	0	92	0	0	0
Total Non-Carc. PNAs	41097	28480	140705	207700	2808	3879	4158	1008	1802	2063	610
Total PNAs	47417	34820	222805	284800	2808	3879	4158	1100	1802	2063	610

Table 1

SUMMARY SEMIVOLATILE ORGANICS RESULTS
NEW SLIP AREA SOIL
(continued)

SAMPLE INFORMATION											
Boring I.D.	S-127	S-127	S-127	S-132	S-132	S-132	S-132	S-133	S-133	S-133	S-133
Sample I.D.	S-1	S-2	S-3	S-1	S-1 DL	S-3	S-3 DL	S-1	S-1 DL	S-2	S-2 DL
CompuChem I.D.	395350	395351	395352	401562	401562	401564	401564	402041	402041	402048	402048
Sample Depth (ft)	5.0-6.5	15.0-16.5	25.0-26.5	18.0-20 0	18 0-20 0	24.0-26.0	24.0-26 0	18 0-20.0	18.0-20.0	21.0-23.0	21.0-23 0
Sample Date	1/24/91	1/24/91	1/24/91	2/26/91	2/26/91	2/26/91	2/26/91	2/27/91	2/27/91	2/27/91	2/27/91
COMPOUNDS (ug/kg)											
Phenol	1100		41000	44000	44000	22000	44000	16000	15000	39000	24000
2-Methylphenol	120		5100	5100	4500	4700	4000			5000	2700
4-Methylphenol	390		39000	21000	20000	13000	18000	5100	5000	17000	10000
2,4-Dimethylphenol		46	4000	2200	1800	2100	1300			1800	1000
Benzoic Acid											
Naphthalene				910	800	3100	3600	16000	15000	13000	9000
2-Methylnaphthalene								3000		2000	1200
Acenaphthylene	1000							980		1000	
Acenaphthene	340					39		47000	39000	20000	14000
Dibenzofuran								47000	36000	21000	14000
Fluorene								110000	66000	39000	28000
Phenanathrene								380000	180000	120000	110000
Anthracene								160000	89000	46000	36000
Di-n-Butylphthalate											
Fluoranthene								160000	100000	93000	75000
Pyrene								92000	72000	68000	52000
Benzo (a) Anthracene [c]								34000	23000	23000	17000
Chrysene [c]								33000	23000	22000	17000
bis (2-Ethylhexyl) Phthalate											
Benzo (b) Fluoranthene [c]								36000	16000	27000	15000
Benzo (k) Fluoranthene [c]								36000	16000	27000	4800
Benzo (a) Pyrene [c]								17000	6700	12000	8700
Indeno (1,2,3-cd) Pyrene [c]								6000		3900	
Dibenzo (a,h) Anthracene [c]								880			
Benzo (g,h,i) Perylene								6100			
Total Phenols	1610	46	89100	72300	70300	41800	67300	21100	20000	62800	37700
Total Carc. PNAs	0	0	0	0	0	0	0	162880	84700	114900	62500
Total Non-Carc. PNAs	1340	0	0	910	800	3139	3600	1022080	597000	423000	339200
Total PNAs	1340	0	0	910	800	3139	3600	1184960	681700	537900	401700

Table 1

SUMMARY SEMIVOLATILE ORGANICS RESULTS
NEW SLIP AREA SOIL
(continued)

SAMPLE INFORMATION											
Boring I D.	S-133	S-134	S-135	S-135	S-136	S-136	S-136	S-137	NSWT	NSWT	NSWT
Sample I.D.	S-3	S-1	S-1	S-1 DL	S-1	S-1 DL	S-2	S-1	S-1	S-2	S-3
CompuChem I.D.	402050	402033	402036	402036	402024	402024	402026	402029	386708	386709	386713
Sample Depth (ft)	24.0-26.0	18.0-20.0	18.0-20.0	18.0-20 0	5.0-7.0	5.0-7.0	7.0-9 0	5.0-7.0	5 0	5.0	2.5
Sample Date	2/27/91	2/27/91	2/27/91	2/27/91	2/27/91	2/27/91	2/27/91	2/27/91	12/6/90	12/6/90	12/6/90
COMPOUNDS (ug/kg)											
Phenol	39000	9600	39000	110000							
2-Methylphenol	3400	670	10000	13000							
4-Methylphenol	14000	3500	40000	41000							
2,4-Dimethylphenol	1100	240	5200	4100							
Benzoic Acid							43			40	210
Naphthalene	4200	8900	2500	3600	17000	27000	160				3200
2-Methylnaphthalene	570	880			8000	11000					1900
Acenaphthylene	220	130			2800	7200		160			3200
Acenaphthene	9800	2900			41000	52000	2000	2500	1500		1300
Dibenzofuran	10000	2300			26000	34000	95	100			1500
Fluorene	19000	3500			63000	66000	110	1000	930		240
Phenanathrene	70000	11000	86		260000	220000	220	290	60		12000
Anthracene	19000	1800	60		80000	90000	96	410			3800
Di-n-Butylphthalate											
Fluoranthene	26000	5400	63		320000	250000	210	200			52000
Pyrene	17000	3700	58		190000	160000	140	170			37000
Benzo (a) Anthracene [c]	6100	1400			61000	78000	54	63			20000
Chrysene [c]	5700	1300			53000	79000	63	47			24000
bis (2-Ethylhexyl) Phthalate					4200	13000	64	93			
Benzo (b) Fluoranthene [c]	3800	1600			73000	120000	58	85			35000
Benzo (k) Fluoranthene [c]		1600			73000	120000	58	85			35000
Benzo (a) Pyrene [c]	3000	690			32000	38000		43			15000
Indeno (1,2,3-cd) Pyrene [c]					15000	11000					7300
Dibenzo (a,h) Anthracene [c]					4800						2600
Benzo (g,h,I) Perylene					15000	11000					7400
Total Phenols	57500	14010	94200	168100	0	0	0	0	0	0	0
Total Carc. PNAs	18600	6590	0	0	311800	446000	233	323	0	0	138900
Total Non-Carc. PNAs	175790	40510	2767	3600	1027000	941200	3138	4923	2490	40	123750
Total PNAs	194390	47100	2767	3600	1338800	1387200	3371	5246	2490	40	262650

Table 1

SUMMARY SEMIVOLATILE ORGANICS RESULTS
NEW SLIP AREA SOIL
(continued)

SAMPLE INFORMATION											
Boring I.D.			NSWT	NSWT	NSWT	NSWT	SEET	SEET	STBT		
Sample I.D.			S-3 DL	S-4	S-5	S-6	S-1	S-2	S-1		
CompuChem I.D.			386713	386714	387954	387955	391607	391608	393693		
Sample Depth (ft)			2.5	2.5	5.0	4.0	4.0	4.0	3.0		
Sample Date			12/6/90	12/6/90	12/11/90	12/11/90	1/4/91	33242	33254		
COMPOUNDS (ug/kg)											
Phenol											
2-Methylphenol											
4-Methylphenol											
2,4-Dimethylphenol											
Benzoic Acid											
Naphthalene			3600			120			50000		
2-Methylnaphthalene			2000			75			13000		
Acenaphthylene			2700			140			2800		
Acenaphthene			1700	60		140			34000		
Dibenzofuran			1800			110			29000		
Fluorene			1200			110			42000		
Phenanathrene			15000			630	110	48	150000		
Anthracene			3800			290			39000		
Di-n-Butylphthalate											
Fluoranthene			63000			2300	570	100	110000		
Pyrene			51000	39		1500	510	120	94000		
Benzo (a) Anthracene [c]			26000			890	190	63	43000		
Chrysene [c]			29000			880	400	68	33000		
bis (2-Ethylhexyl) Phthalate											
Benzo (b) Fluoranthene [c]			42000			1400	650	84	55000		
Benzo (k) Fluoranthene [c]			42000			1400	650	84	55000		
Benzo (a) Pyrene [c]			18000			650	230		27000		
Indeno (1,2,3-cd) Pyrene [c]			9000			330	140		12000		
Dibenzo (a,h) Anthracene [c]			3000			120			4800		
Benzo (g,h,i) Perylene			9800			340	130		13000		

Total Phenols	0	0	0	0	0	0	0
Total Carc. PNAs	169000	0	0	5670	2260	299	229800
Total Non-Carc. PNAs	155600	99	0	5755	1320	268	576800
Total PNAs	324600	99	0	11425	3580	567	806600

Table 1

SUMMARY SEMIVOLATILE ORGANICS RESULTS
NEW SLIP AREA SOIL
FIELD REPLICATES
(continued)

SAMPLE INFORMATION											
Field Replicate I.D.			FR-1	FR-2	FR-3	FR-3 DL	FR-4	FR-5			
Boring I.D.			S-112	S-111	S-108	S-108	S-105	S-105			
Sample I.D.			S-1	S-1	S-A1	S-A1	S-A1	S-6			
CompuChem I.D.			383093	383090	383390	383390	383771	383772			
Sample Depth (ft)			5.0-7.0	5.0-7.0	9.0-11.0	9.0-11.0	9.0-11.0	24.0-26.0			
Sample Date			11/20/91	11/20/91	11/21/91	11/21/91	11/26/91	11/26/91			
COMPOUNDS (ug/kg)											
Phenol											
2-Methylphenol								350			
4-Methylphenol								6500			
2,4-Dimethylphenol								4700			
Benzoic Acid					42						
Naphthalene					28000	70000	55				
2-Methylnaphthalene					590	1600					
Acenaphthylene					140		190				
Acenaphthene					10000	7700	1800				
Dibenzofuran					7500	5400	1500				
Fluorene					3900	2300	340				
Phenanathrene					63						
Anthracene					47						
Di-n-Butylphthalate											
Fluoranthene											
Pyrene											
Benzo (a) Anthracene [c]											
Chrysene [c]											
bis (2-Ethylhexyl) Phthalate							72	61			
Benzo (b) Fluoranthene [c]											
Benzo (k) Fluoranthene [c]											
Benzo (a) Pyrene [c]											
Indeno (1,2,3-cd) Pyrene [c]											
Dibenzo (a,h) Anthracene [c]											
Benzo (g,h,i) Perylene											

Total Phenols	0	0	0	0	0	11550
Total Carc. PNAs	0	0	0	0	0	0
Total Non-Carc. PNAs	0	0	50282	87000	3957	61
Total PNAs	0	0	50282	87000	3957	61

Table 1

SUMMARY SEMIVOLATILE ORGANICS RESULTS
NEW SLIP AREA SOIL
(continued)

NOTES:

1. All results presented in micrograms per kilogram or parts per billion.
2. Semivolatile compounds not listed were not detected in any sample.
3. Results presented in boldface were detected above the quantification limit.
4. Results presented in normal typeface were detected below the quantification limit and estimated.
5. Shaded results exceeded the quantification range and a diluted sample was analyzed.
6. Bracketed 'c' indicates compound is carcinogenic.

TABLE 1
SUMMARY OF SOIL CHEMICAL DATA
WAUKEGAN HARBOR SITE
WAUKEGAN, ILLINOIS

Compound (ppm)	Boring S-41[a] 6.0 to 7.5 (ft.)	Boring S-41 23.5 to 25.0 (ft.)	Boring S-2 20.0 to 22.0 (ft.)	Boring S-36 8.0 to 9.5 (ft.)	Boring S-39 3.0 to 4.5 (ft.)
Acenaphthene	840	1200	200	<.01	<.01
Acenaphthylene	260	440	65	<.01	<.01
Anthracene	<.10[b]	<.10	120	<.01	<.01
Benzo(A)Anthracene	610	700	140	<.01	<.01
Benzo(A)Pyrene	<.10	<.10	760 ~~76~~	<.01	<.01
Benzo(B)Fluoranthene	110	110	85	<.01	<.01
Benzo(G,H,I)Perylene	<.01	<.10	23	<.01	<.01
Benzo(K)Fluoranthene	<.10	<.10	74	<.01	<.01
Benzyl Butyl Phthalate	<.10	<.10	<0.33	<.01	<.01
Bis(2-Chloroethoxy)Methane	<.01	<.10	<3.3	<.01	<.01
Bis(2-Cloroethyl)Ether	<.01	<.10	<0.33	<.01	<.01
Bis(2-Chloroisopropyl)Ether	<.01	<.01	<0.33	<.01	<.01
Bis(2-Ethylhexyl)Phthalate	97	86	<0.33	<.01	<.01
Benzidine	<.10	<.10	NT[c]	<.01	<.01
4-Bromophenyl Phenyl Ether	5.5	32	NT	<.01	<.01
2 Chloronaphthalene	<.10	<.10	NT	<.01	<.01
4-Chlorophenyl Phenyl ether	280	430	<0.33	<.01	<.01
Chrysene	520	540	110	<.01	<.01
Dibenzo(A,H)Anthracene	<.10	<.10	5.7	<.01	<.01

TABLE 1
SUMMARY OF SOIL CHEMICAL DATA
WAUKEGAN HARBOR SITE
WAUKEGAN, ILLINOIS
(Continued)

Compound (ppm)	Boring S-41[a] 6.0 to 7.5 (ft.)	Boring S-41 23.5 to 25.0 (ft.)	Boring S-2 20.0 to 22.0 (ft.)	Boring S-36 8.0 to 9.5 (ft.)	Boring S-39 3.0 to 4.5 (ft.)
1,2-Dichlorobenzene	<.01	<.10	<0.33	<.01	<.01
1,3-Dichlorobenzene	<.01	<.10	<0.33	<.01	<.01
1,4-Dichlorobenzene	34	<.10	<0.33	<.01	<.01
3,3'-Dichlorobenzidine	<.10	<.10	<0.66	<.01	<.01
Diethylphthalate	55	100	<0.33	<.01	<.01
Dimethylphthalate	95	120	<0.33	<.01	<.01
2,4-Dinitrotoluene	<.10	<.10	2.5	<.01	<.01
2,6-Dinitrotoluene	<.10	200	<0.33	<.01	<.01
Di-N-Butylphthalate	180	230	<0.33	<.01	<.01
Di-N-Octylphthalate	380	400	<0.33	<.01	<.01
1,2-Diphenylhydrazine	<.10	<.10	NT	<.01	<.01
Fluoranthene	1900	2200	390	<.01	<.01
Fluorene	1200	1700	290	<.01	<.01
Hexachlorobenzene	<.10	<.10	<0.33	<.01	<.01
Hexachlorobutadiene	<.10	<.10	<3.3	<.01	<.01
Hexachlorocyclopentadiene	5700	<.10	<0.33	<.01	<.01
Hexachloroethane	<.10	<.10	<0.33	<.01	<.01
Indeno(1,2,3,C,D)Pyrene	<.10	<.10	23	<.01	<.01

TABLE 1
SUMMARY OF SOIL CHEMICAL DATA
WAUKEGAN HARBOR SITE
WAUKEGAN, ILLINOIS
(Continued)

Compound (ppm)	Boring S-41[a] 6.0 to 7.5 (ft.)	Boring S-41 23.5 to 25.0 (ft.)	Boring S-2 20.0 to 22.0 (ft.)	Boring S-36 8.0 to 9.5 (ft.)	Boring S-39 3.0 to 4.5 (ft.)
Isophorone	<.10	<.10	<3.3	<.01	<.01
Naphthalene	8200	12,000	>1000	<.01	<.01
Nitrobenzene	<.10	<.10	<3.3	<.01	<.01
N-Nitrosodiphenylamine	200	270	<0.33	<.01	<.01
N-Nitroso-Di-N-Propylamine	<.10	<.10	<0.33	<.01	<.01
N-Nitrosodimethyamine	<.01	<.01	NT	<.01	<.01
Phenanthrene	5300	6400	710	<.01	<.01
Pyrene	1500	1700	430	<.01	<.01
1,2,4-Trichlorobenzene	<.10	<.10	<3.3	<.01	<.01
2-Chlorophenol	NT	NT	<0.33	NT	NT
4-Chloro-3-Methylphenol	NT	NT	<3.3	NT	NT
2,4-Dichlorophenol	NT	NT	<3.3	NT	NT
2,4-Dimethylphenol	NT	NT	6.9	NT	NT
2,4-Dinitrophenol	NT	NT	<1.6	NT	NT
4,6-Dinitro-2-Methylphenol	NT	NT	<1.6	NT	NT
2-Nitrophenol	NT	NT	<3.3	NT	NT
4-Nitrophenol	NT	NT	<1.6	NT	NT
Pentachlorophenol	NT	NT	<1.6	NT	NT
Phenol	NT	NT	73	NT	NT

TABLE 1
SUMMARY OF SOIL CHEMICAL DATA
WAUKEGAN HARBOR SITE
WAUKEGAN, ILLINOIS
(Continued)

Compound (ppm)	Boring S-41[a] 6.0 to 7.5 (ft.)	Boring S-41 23.5 to 25.0 (ft.)	Boring S-2 20.0 to 22.0 (ft.)	Boring S-36 8.0 to 9.5 (ft.)	Boring S-39 3.0 to 4.5 (ft.)
2,4,6-Trichlorophenol	NT	NT	<0.33	NT	NT
Aldrin	NT	NT	<0.33	NT	NT
BHC, Alpha-	NT	NT	<0.33	NT	NT
BHC, Beta-	NT	NT	8.8	NT	NT
BHC, Delta-	NT	NT	<0.33	NT	NT
BHC, Gamma- (Lindane)	NT	NT	49	NT	NT
4,4'-DDD (P,P'-)	NT	NT	<3.3	NT	NT
4,4'-DDE (P,P'-)	NT	NT	<0.33	NT	NT
4,4'-DDT (P,P'-)	NT	NT	<0.33	NT	NT
Dieldrin	NT	NT	<0.33	NT	NT
Endosulfan I	NT	NT	<0.33	NT	NT
Endosulfan II	NT	NT	<0.33	NT	NT
Endosulfan Sulfate	NT	NT	<0.33	NT	NT
Endrin	NT	NT	<0.33	NT	NT
Endrin Aldehyde	NT	NT	<0.33	NT	NT
Heptachlor	NT	NT	<0.33	NT	NT
Heptachlor Expoxide	NT	NT	<0.33	NT	NT
Toxaphene	NT	NT	<3.3	NT	NT
Benzyl Alcohol	NT	NT	<0.33	NT	NT

TABLE 1
SUMMARY OF SOIL CHEMICAL DATA
WAUKEGAN HARBOR SITE
WAUKEGAN, ILLINOIS
(Continued)

Compound (ppm)	Boring S-41[a] 6.0 to 7.5 (ft.)	Boring S-41 23.5 to 25.0 (ft.)	Boring S-2 20.0 to 22.0 (ft.)	Boring S-36 8.0 to 9.5 (ft.)	Boring S-39 3.0 to 4.5 (ft.)
4-Chloroaniline	NT	NT	<3.3	NT	NT
Dibenzofuran	NT	NT	190	NT	NT
2-Methylnaphthalene	NT	NT	280	NT	NT
2-Nitroaniline	NT	NT	<0.33	NT	NT
3-Nitroaniline	NT	NT	<0.33	NT	NT
4-Nitroaniline	NT	NT	<0.33	NT	NT
2-Methylphenol (O-Cresol)	NT	NT	16	NT	NT
4-Methylphenol (P-Cresol)	NT	NT	61	NT	NT
2,4,5-Trichlorophenol	NT	NT	<0.33	NT	NT
Chlordane, Alpha	NT	NT	<3.3	NT	NT
Chlordane, Gamma	NT	NT	<3.3	NT	NT
Endrin Ketone	NT	NT	<0.33	NT	NT
Methoxychlor	NT	NT	51	NT	NT
Cadmium - Total	NT	NT	0.5	NT	NT
Chromium - Total	NT	NT	2.1	NT	NT

TABLE 1
SUMMARY OF SOIL CHEMICAL DATA
WAUKEGAN HARBOR SITE
WAUKEGAN, ILLINOIS
(Continued)

Compound (ppm)	Boring S-41[a] 6.0 to 7.5 (ft.)	Boring S-41 23.5 to 25.0 (ft.)	Boring S-2 20.0 to 22.0 (ft.)	Boring S-36 8.0 to 9.5 (ft.)	Boring S-39 3.0 to 4.5 (ft.)
Lead - Total	NT	NT	2.9	NT	NT
Silver - Total	NT	NT	<0.2	NT	NT
Arsenic - Total	NT	NT	14	NT	NT
Selenium - Total	NT	NT	<0.50	NT	NT
Mercury - Total	NT	NT	<0.010	NT	NT
Benzene	NT	NT	0.002	NT	NT
Bromoform	NT	NT	<0.001	NT	NT
Carbon Tetrachloride	NT	NT	<0.001	NT	NT
Chlorobenzene	NT	NT	<0.001	NT	NT
Chlorodibromomethane	NT	NT	<0.001	NT	NT
Chloroethane	NT	NT	<0.001	NT	NT
2-Chloroethylvinyl Ether	NT	NT	<0.001	NT	NT
Chloroform	NT	NT	<0.001	NT	NT
Dichlorobromomethane	NT	NT	<0.001	NT	NT
Dichlorodifluoromethane	NT	NT	<0.001	NT	NT

TABLE 1
SUMMARY OF SOIL CHEMICAL DATA
WAUKEGAN HARBOR SITE
WAUKEGAN, ILLINOIS
(Continued)

Compound (ppm)	Boring S-41[a] 6.0 to 7.5 (ft.)	Boring S-41 23.5 to 25.0 (ft.)	Boring S-2 20.0 to 22.0 (ft.)	Boring S-36 8.0 to 9.5 (ft.)	Boring S-39 3.0 to 4.5 (ft.)
1,1-Dichloroethane	NT	NT	<0.001	NT	NT
1,2-Dichloroethane	NT	NT	<0.001	NT	NT
1,1-Dichloroethylene	NT	NT	<0.001	NT	NT
1,2-Dichloropropane	NT	NT	<0.001	NT	NT
Dichloropropylene (Mixed)	NT	NT	<0.001	NT	NT
Ethylbenzene	NT	NT	0.003	NT	NT
Methyl Bromide	NT	NT	<0.001	NT	NT
Methyl Chloride	NT	NT	<0.001	NT	NT
Methylene Chloride	NT	NT	<0.001	NT	NT
1,1,2,2-Tetrachloroethane	NT	NT	<0.001	NT	NT
Tetrachloroethylene	NT	NT	<0.001	NT	NT
Toluene	NT	NT	0.008	NT	NT
1,2-Transdichloroethylene	NT	NT	<0.001	NT	NT
1,1,1-Trichloroethane	NT	NT	<0.001	NT	NT

TABLE 1
SUMMARY OF SOIL CHEMICAL DATA
WAUKEGAN HARBOR SITE
WAUKEGAN, ILLINOIS
(Continued)

Compound (ppm)	Boring S-41[a] 6.0 to 7.5 (ft.)	Boring S-41 23.5 to 25.0 (ft.)	Boring S-2 20.0 to 22.0 (ft.)	Boring S-36 8.0 to 9.5 (ft.)	Boring S-39 3.0 to 4.5 (ft.)
1,1,2-Trichloroethane	NT	NT	<0.001	NT	NT
Trichloroethylene	NT	NT	<0.001	NT	NT
Trichlorofluoromethane	NT	NT	<0.001	NT	NT
Vinyl Chloride	NT	NT	0.055	NT	NT
Barium - Total	NT	NT	2.5	NT	NT

Notes:

[a]Sample collection dates are: Boring S-41, March 16, 1989, Boring S-2, January 13, 1989, Borings S-36 and S-39, February 2, 1989.

[b]<.10 - Not detected to level shown.

[c]NT - Not tested.

TABLE 2: SOIL INVESTIGATION DATA, NEW SLIP AREA

Boring No.:	S-42	S-42	S-42	S-42	S-43	S-43	S-43
Canonie I.D. #:	S-42-01	S-42-02	S-42-03	S-42-03	S-43-01	S-43-02	S-43-03
CompuChem I.D. #:	077567	077574	077575	D77575	077160	077173	077174
Sample Depth (feet):	5	15	24	24	5	15	25
Concentration	(ppm)	(ppm)	(ppm)	(ppm)	(ppm)	(ppm)	(ppm)
Chemical Name							
Phenol			59	79			64
2-Methylphenol			7.5				13
4-Methylphenol			37	31			72
2,4-Dimethylphenol			3.4				4.6
Naphthalene							
4-Chloroaniline							
2-Methylnaphthalene							
Acenaphthylene							
Acenaphthene	1.3				1.9		
Dibenzofuran							
Fluorene							
Phenanthrene							
Anthracene							
Fluoranthene							
Pyrene							
Benzo(a)Anthracene (carc.)							
Bis(2-Ethylhexyl)Phthalate							
Chrysene (carc.)							
Benzo(b)Fluoranthene (carc.)							
Benzo(k)Fluoranthene (carc.)							
Benzo(a)Pyrene (carc.)							
Indeno(1,2,3-c,d)Pyrene (carc.)							
Dibenzo(a,h)Anthracene (carc.)							
Benzo(g,h,i)Perylene							
Beta-BHC							
Total Phenols	0	0	106.9	110	0	0	153.6
Total non-carc. PNAs	1.3	0	0	0	1.9	0	0
Total carc. PNAs	0	0	0	0	0	0	0
Total PNAs	1.3	0	0	0	1.9	0	0
Total Pesticides							
Typical Detection Level	0.35	0.37	3.2	8	0.39	0.4	7.7

CanonieEnvironmental

TABLE 2: SOIL INVESTIGATION DATA, NEW SLIP AREA

Boring No.:	S-43	S-44	S-44	S-44	S-44	S-45	S-45
Canonie I.D. #:	S-43-03	S-44-01	S-44-02	S-44-03	S-44-03	S-45-01	S-45-01
CompuChem I.D. #:	D77174	077576	077577	077578	D77578	078655	D78655
Sample Depth (feet)	25	5	15	23.5	23.5	5	5
Concentration	(ppm)	(ppm)	(ppm)	(ppm)	(ppm)	(ppm)	(ppm)
Chemical Name							
Phenol	78			25	51		
2-Methylphenol				6.5			
4-Methylphenol	41			23	23		
2,4-Dimethylphenol				4.2			
Naphthalene						1500	2700
4-Chloroaniline							
2-Methylnaphthalene						390	260
Acenaphthylene							
Acenaphthene						500	380
Dibenzofuran						380	250
Fluorene						490	300
Phenanthrene						970	1000
Anthracene						260	
Fluoranthene						520	400
Pyrene						350	
Benzo(a)Anthracene (carc.)						130	
Bis(2-Ethylhexyl)Phthalate							
Chrysene (carc.)						120	
Benzo(b)Fluoranthene (carc.)						58	
Benzo(k)Fluoranthene (carc.)						51	
Benzo(a)Pyrene (carc.)						59	
Indeno(1,2,3-c,d)Pyrene (carc.)							
Dibenzo(a,h)Anthracene (carc.)							
Benzo(g,h,i,)Perylene							
Beta-BHC							
Total Phenols	119	0	0	57.7	74	0	0
Total non-carc. PNAs	0	0	0	0	0	5360	5290
Total carc. PNAs	0	0	0	0	0	418	0
Total PNAs	0	0	0	0	0	5778	5290
Total Pesticides							
Typical Detection Level	7.7	0.39	0.4	0.39	6.7	23	230

TABLE 2: SOIL INVESTIGATION DATA, NEW SLIP AREA

Boring No.:	S-45	S-45	S-45	S-45	S-45	S-45	S-46
Canonie I.D. #:	S-45-02	S-45-02	DUP-03	DUP-03	S-45-03	S-45-04	S-46-01
CompuChem I.D. #:	078657	J78657	078664	D78664	078658	078658	077982
Sample Depth (feet):	15	15	15	15	24	24	5
Concentration	(ppm)	(ppm)	(ppm)	(ppm)	(ppm)	(ppm)	(ppm)
Chemical Name							
Phenol			50	71	68	170	
2-Methylphenol			11	8.7	17	21	
4-Methylphenol			29	42	49	72	
2,4-Dimethylphenol			7.9		8.6		
Naphthalene	8.4	9.6	0.88				13
4-Chloroaniline							
2-Methylnaphthalene	3.1	2.3			5.5		
Acenaphthylene							
Acenaphthene	5	2.9					45
Dibenzofuran	3.9	2.6					30
Fluorene	1.2						40
Phenanthrene	1.2				3		88
Anthracene							12
Fluoranthene	0.67						56
Pyrene							30
Benzo(a)Anthracene (carc.)							10
Bis(2-Ethylhexyl)Phthalate							
Chrysene (carc.)							9.2
Benzo(b)Fluoranthene (carc.)							4.2
Benzo(k)Fluoranthene (carc.)							6.1
Benzo(a)Pyrene (carc.)							5.2
Indeno(1,2,3-c,d)Pyrene (carc.)							
Dibenzo(a,h)Anthracene (carc.)							
Benzo(g,h,i)Perylene							
Beta-BHC							
Total Phenols	0	0	97.9	121.7	142.6	263	0
Total non-carc. PNAs	23.47	17.4	0.88	0	8.5	0	314
Total carc. PNAs	0	0	0	0	0	0	34.7
Total PNAs	23.47	17.4	0.88	0	8.5	0	348.7
Total Pesticides							
Typical Detection Level	0.4	1.2	0.4	8	2.1	17	2

TABLE 2: SOIL INVESTIGATION DATA, NEW SLIP AREA

Boring No.:	S-46	S-46	S-46	S-46	S-47	S-47	S-47
Canonie I.D. #:	S-46-01	S-46-02	S-46-03	S-46-03	S-47-01	S-47-01	S-47-02
CompuChem I.D. #:	D77982	077983	077984	D77984	077985	D77985	077986
Sample Depth (feet):	5	15	23.5	23.5	5	5	15
Concentration	(ppm)	(ppm)	(ppm)	(ppm)	(ppm)	(ppm)	(ppm)
Chemical Name							
Phenol			11	14			
2-Methylphenol			2.7	1.4			
4-Methylphenol			8.6	8.1			
2,4-Dimethylphenol			2.4	1.1			
Naphthalene		4			2700	5900	4.5
4-Chloroaniline							
2-Methylnaphthalene		0.99			1700	2300	
Acenaphthylene					340		
Acenaphthene	31	1.4			930	1100	
Dibenzofuran	19	0.59			810	960	
Fluorene	23				1300	1600	
Phenanthrene	82	0.89			2800	4800	0.69
Anthracene					650	880	
Fluoranthene	29				1700	2900	
Pyrene	27				1800	2200	
Benzo(a)Anthracene (carc.)					700	770	
Bis(2-Ethylhexyl)Phthalate							
Chrysene (carc.)					800	800	
Benzo(b)Fluoranthene (carc.)					340	770	
Benzo(k)Fluoranthene (carc.)					340	770	
Benzo(a)Pyrene (carc.)					370		
Indeno(1,2,3-c,d)Pyrene (carc.)					130		
Dibenzo(a,h)Anthracene (carc.)							
Benzo(g,h,i)Perylene					120		
Beta-BHC							
Total Phenols	0	0	24.7	24.6	0	0	0
Total non-carc. PNAs	211	7.87	0	0	14850	22640	5.19
Total carc. PNAs	0	0	0	0	2680	3110	0
Total PNAs	211	7.87	0	0	17530	25750	5.19
Total Pesticides							
Typical Detection Level	9.8	0.39	0.37	1.1	110	440	0.4

TABLE 2: SOIL INVESTIGATION DATA, NEW SLIP AREA

Boring No.:	S-47	S-47	S-47	S-48	S-48	S-48	S-48
Canonie I.D. #:	DUP-02	S-47-03	S-47-03	S-48-01	S-48-02	DUP-01	DUP-01
CompuChem I.D. #:	D77998	077987	D77987	077988	077989	077997	D77997
Sample Depth (feet):	15	[illegible]		5	15	15	15
Concentration	(ppm)	(ppm)	(ppm)	(ppm)	(ppm)	(ppm)	(ppm)
Chemical Name							
Phenol		27	64		2.6	5.6	4 8
2-Methylphenol		7.9				0.8	
4-Methylphenol		16	25		0.93	2.8	2.3
2,4-Dimethylphenol		5.2					
Naphthalene	6.2	5			5.9	9.8	14
4-Chloroaniline							
2-Methylnaphthalene		1					
Acenaphthylene							
Acenaphthene				1.3			
Dibenzofuran				0.6			
Fluorene							
Phenanthrene							
Anthracene							
Fluoranthene							
Pyrene							
Benzo(a)Anthracene (carc.)							
Bis(2-Ethylhexyl)Phthalate							
Chrysene (carc.)							
Benzo(b)Fluoranthene (carc.)							
Benzo(k)Fluoranthene (carc.)							
Benzo(a)Pyrene (carc.)							
Indeno(1,2,3-c,d)Pyrene (carc.)							
Dibenzo(a,h)Anthracene (carc.)							
Benzo(g,h,i,)Perylene							
Beta-BHC							
Total Phenols	0	56.1	89	0	3.53	9.2	7.1
Total non-carc. PNAs	6.2	6	0	1.9	5.9	9.8	14
Total carc. PNAs	0	0	0	0	0	0	0
Total PNAs	6.2	6	0	1.9	5.9	9.8	14
Total Pesticides							
Typical Detection Level	0.79	0.38	11	0.39	0.78	0.39	1.9

TABLE 2: SOIL INVESTIGATION DATA, NEW SLIP AREA

Boring No.:	S-48	S-48	S-49	S-49	S-49	S-49	S-49
Canonie I.D. #:	S-48-03	S-48-03	S-49-01	S-49-02	S-49-02	S-49-03	S-49-03
CompuChem I.D. #:	077990	D77990	077579	077580	D77580	077582	D77582
Sample Depth (feet):	23.5	23.5	5	15	15	23.5	23.5
Concentration	(ppm)	(ppm)	(ppm)	(ppm)	(ppm)	(ppm)	(ppm)
Chemical Name							
Phenol	67	160		0.48		35	93
2-Methylphenol	16	17				6.3	
4-Methylphenol	45	67		0.43		24	28
2,4-Dimethylphenol	6.1					2.6	
Naphthalene	6		0.48	0.97	20	3.5	
4-Chloroaniline							
2-Methylnaphthalene				4.1	3.1		
Acenaphthylene							
Acenaphthene			1.3	2.8			
Dibenzofuran				0.67			
Fluorene							
Phenanthrene							
Anthracene							
Fluoranthene							
Pyrene							
Benzo(a)Anthracene (carc.)							
Bis(2-Ethylhexyl)Phthalate							
Chrysene (carc.)							
Benzo(b)Fluoranthene (carc.)							
Benzo(k)Fluoranthene (carc.)							
Benzo(a)Pyrene (carc.)							
Indeno(1,2,3-c,d)Pyrene (carc.)							
Dibenzo(a,h)Anthracene (carc.)							
Benzo(g,h,i,)Perylene							
Beta-BHC							
Total Phenols	134.1	244	0	0.91	0	67.9	121
Total non-carc. PNAs	6	0	1.78	8.54	23.1	3.5	0
Total carc. PNAs	0	0	0	0	0	0	0
Total PNAs	6	0	1.78	8.54	23.1	3.5	0
Total Pesticides							
Typical Detection Level	0.39	16	0.38	0.38	1.9	0.39	7.8

TABLE 2: SOIL INVESTIGATION DATA, NEW SLIP AREA

Boring No.:	S-50	S-50	S-50	S-50	S-50	S-51	S-51
Canonie I.D. #:	S-50-01	S-50-01	S-50-02	S-50-03	S-50-03	S-51-01	S-51-01
CompuChem I.D. #:	080167	D80167	080168	080316	D80316	0280317	J80317
Sample Depth (feet):	5	5	15	25	25	5	5
Concentration	(ppm)	(ppm)	(ppm)	(ppm)	(ppm)	(ppm)	(ppm)
Chemical Name							
Phenol				25	78		
2-Methylphenol				9.9			
4-Methylphenol				40	28		
2,4-Dimethylphenol				4.3			
Naphthalene			2.6				0.81
4-Chloroaniline							
2-Methylnaphthalene							
Acenaphthylene							
Acenaphthene	37						5.8
Dibenzofuran	28						0.88
Fluorene	210	140					2.1
Phenanthrene			0.53	0.42			2.3
Anthracene	25						0.76
Fluoranthene	560	590					14
Pyrene	470	480					8.9
Benzo(a)Anthracene (carc.)	99	76					4.2
Bis(2-Ethylhexyl)Phthalate							
Chrysene (carc.)	93	71					7.2
Benzo(b)Fluoranthene (carc.)	33						3.7
Benzo(k)Fluoranthene (carc.)	24						2.2
Benzo(a)Pyrene (carc.)	34						2.6
Indeno(1,2,3-c,d)Pyrene (carc.)							1.3
Dibenzo(a,h)Anthracene (carc.)							0.57
Benzo(g,h,i)Perylene							1.3
Beta-BHC						0.15	
Total Phenols	0	0	0	79.2	106		0
Total non-carc. PNAs	1330	1210	3.13	0.42	0		36.85
Total carc. PNAs	283	147	0	0	0		21.77
Total PNAs	1613	1357	3.13	0.42	0		58.62
Total Pesticides						0.15	
Typical Detection Level	24	71	0.39	0.41	8.1	0.02	0.39

TABLE 2: SOIL INVESTIGATION DATA, NEW SLIP AREA

Boring No.:	S-51	S-51	S-51	S-51	S-52	S-52	S-52
Canonie I.D. #:	S-51-01	S-51-02	S-51-03	S-51-03	S-52-01	S-52-01	S-52-02
CompuChem I.D. #:	D80317	080318	080319	D80319	080320	D80320	080321
Sample Depth (feet):	5	15	25	25	5	5	15
Concentration	(ppm)	(ppm)	(ppm)	(ppm)	(ppm)	(ppm)	(ppm)
Chemical Name							
Phenol			36	130			16
2-Methylphenol			17	16			2.3
4-Methylphenol			64	71			7.5
2,4-Dimethylphenol			8.7				
Naphthalene		3.9			2.8		27
4-Chloroaniline							
2-Methylnaphthalene					2.2		
Acenaphthylene					9.4		
Acenaphthene	4.3				67	140	
Dibenzofuran					57	100	
Fluorene					67	130	
Phenanthrene					170	480	
Anthracene					34	130	
Fluoranthene	11				110	230	
Pyrene	8.9				79	180	
Benzo(a)Anthracene (carc.)	2.8				50	55	
Bis(2-Ethylhexyl)Phthalate							
Chrysene (carc.)	5.5				43	61	
Benzo(b)Fluoranthene (carc.)					50		
Benzo(k)Fluoranthene (carc.)					50		
Benzo(a)Pyrene (carc.)					30		
Indeno(1,2,3-c,d)Pyrene (carc.)					7.6		
Dibenzo(a,h)Anthracene (carc.)					4.1		
Benzo(g,h,i,)Perylene					6.8		
Beta-BHC							
Total Phenols	0	0	125.7	217	0	0	25.8
Total non-carc. PNAs	24.2	3.9	0	0	605.2	1390	27
Total carc. PNAs	8.3	0	0	0	234.7	116	0
Total PNAs	32.5	3.9	0	0	839.9	1506	27
Total Pesticides							
Typical Detection Level	2	0.39	0.4	8	0.78	47	1.6

TABLE 2: SOIL INVESTIGATION DATA, NEW SLIP AREA

Boring No.:	S-52	S-52	S-52	S-52	S-52	S-53	S-53
Canonie I.D. #:	S-52-02	DUP-07	DUP-07	S-52-03	S-52-03	S-53-01	S-53-01
CompuChem I.D. #:	D80321	080325	J80325	080322	J80322	079348	D79348
Sample Depth (feet):	15	15	15	24	24	5	5
Concentration	(ppm)	(ppm)	(ppm)	(ppm)	(ppm)	(ppm)	(ppm)
Chemical Name							
Phenol	8.6	5.5		23	57		
2-Methylphenol		1.8		7.1	5.5		
4-Methylphenol	4	4.4		33	31		
2,4-Dimethylphenol		0.82		3.1			
Naphthalene	22	15	74			0.45	
4-Chloroaniline							
2-Methylnaphthalene							
Acenaphthylene							
Acenaphthene						0.46	
Dibenzofuran						0.46	
Fluorene						0.73	
Phenanthrene		1				2	2.2
Anthracene						0.86	0.8
Fluoranthene						8.5	8
Pyrene						7.8	5.3
Benzo(a)Anthracene (carc.)						3.2	2.6
Bis(2-Ethylhexyl)Phthalate							
Chrysene (carc.)						3.7	3.6
Benzo(b)Fluoranthene (carc.)						2.4	4.1
Benzo(k)Fluoranthene (carc.)						1.7	4.1
Benzo(a)Pyrene (carc.)						2.1	2.3
Indeno(1,2,3-c,d)Pyrene (carc.)						0.96	1.2
Dibenzo(a,h)Anthracene (carc.)							
Benzo(g,h,i,)Perylene						1	1.4
Beta-BHC							
Total Phenols	12.6	12.52	0	66.2	93.5	0	0
Total non-carc. PNAs	22	16	74	0	0	22.26	17.7
Total carc. PNAs	0	0	0	0	0	14.06	17.9
Total PNAs	22	16	74	0	0	36.32	35.6
Total Pesticides							
Typical Detection Level	4	0.41	6.1	0.38	3.8	0.39	0.78

TABLE 2: SOIL INVESTIGATION DATA, NEW SLIP AREA

Boring No.:	S-53	S-53	S-54	S-54	S-54	S-54	S-54
Canonie I.D. #:	S-53-02	S-53-03	S-54-01	S-54-01	S-54-02	S-54-03	S-54-03
CompuChem I.D. #:	079350	079351	078629	D78629	J78632	078634	D78634
Sample Depth (feet):	15	24	5	5	15	24	24
Concentration	(ppm)	(ppm)	(ppm)	(ppm)	(ppm)	(ppm)	(ppm)
Chemical Name							
Phenol		8.3				33	120
2-Methylphenol		2.2				9.7	
4-Methylphenol		6.2				27	43
2,4-Dimethylphenol		1.8				5.7	
Naphthalene			11	26	1200	1.5	
4-Chloroaniline							
2-Methylnaphthalene			0.5	7.9	510		
Acenaphthylene			0.98				
Acenaphthene			14	22	460	0.8	
Dibenzofuran			12	17	360	0.56	
Fluorene			17	27	460	0.65	
Phenanthrene			31	59	1400	2.1	
Anthracene			4.1	6.9	210		
Fluoranthene			16	28	680	0.82	
Pyrene			11	21	420	0.54	
Benzo(a)Anthracene (carc.)			5.1	4.3			
Bis(2-Ethylhexyl)Phthalate							
Chrysene (carc.)			4.8	5.2			
Benzo(b)Fluoranthene (carc.)			3.4				
Benzo(k)Fluoranthene (carc.)			2.7				
Benzo(a)Pyrene (carc.)			2.7				
Indeno(1,2,3-c,d)Pyrene (carc.)			1.2				
Dibenzo(a,h)Anthracene (carc.)			0.42				
Benzo(g,h,i,)Perylene			0.87				
Beta-BHC							
Total Phenols	0	18.5	0	0	0	75.4	163
Total non-carc. PNAs	0	0	118.45	214.8	5700	6.97	0
Total carc. PNAs	0	0	20.32	9.5	0	0	0
Total PNAs	0	0	138.77	224.3	5700	6.97	0
Total Pesticides							
Typical Detection Level	0.39	0.8	0.4	4	120	0.4	16

TABLE 2: SOIL INVESTIGATION DATA, NEW SLIP AREA

Boring No.:	S-55	S-55	S-55	S-55	S-56	S-56	S-56
Canonie I.D. #:	S-55-01	S-55-02	S-55-03	S-55-03	S-56-01	S-56-02	S-56-03
CompuChem I.D. #:	080164	080165	080166	D80166	080557	080559	080558
Sample Depth (feet):	5	15	25	25	5	15	24
Concentration	(ppm)	(ppm)	(ppm)	(ppm)	(ppm)	(ppm)	(ppm)
Chemical Name							
Phenol			51	99		0.54	81
2-Methylphenol			12	11		0.61	11
4-Methylphenol			41	39		0.95	48
2,4-Dimethylphenol			5.1			0.45	6
Naphthalene							
4-Chloroaniline							
2-Methylnaphthalene							
Acenaphthylene							
Acenaphthene							
Dibenzofuran							
Fluorene							
Phenanthrene	0.47						
Anthracene							
Fluoranthene	2.7						
Pyrene	1.9						
Benzo(a)Anthracene (carc.)	0.5						
Bis(2-Ethylhexyl)Phthalate							
Chrysene (carc.)	0.62						
Benzo(b)Fluoranthene (carc.)	0.45						
Benzo(k)Fluoranthene (carc.)							
Benzo(a)Pyrene (carc.)							
Indeno(1,2,3-c,d)Pyrene (carc.)							
Dibenzo(a,h)Anthracene (carc.)							
Benzo(g,h,i,)Perylene							
Beta-BHC							
Total Phenols	0	0	119.1	149	0	2.55	146
Total non-carc. PNAs	5.07	0	0	0	0	0	0
Total carc. PNAs	1.57	0	0	0	0	0	0
Total PNAs	6.64	0	0	0	0	0	0
Total Pesticides							
Typical Detection Level	0.39	0.39	0.4	8	0.4	0.4	0.4

TABLE 2: SOIL INVESTIGATION DATA, NEW SLIP AREA

Boring No.:	S-56	S-57	S-57	S-57	S-57	S-58	S-58
Canonie I.D. #:	S-56-03	S-57-01	S-57-02	S-57-03	S-57-03	S-58-01	S-58-01
CompuChem I.D. #:	D80558	080771	080774	080784	D80784	080787	D80787
Sample Depth (feet):	24	5	15	24	24	5	5
Concentration	(ppm)	(ppm)	(ppm)	(ppm)	(ppm)	(ppm)	(ppm)
Chemical Name							
Phenol	61			14	26		
2-Methylphenol				3.1	34		
4-Methylphenol	34			31			
2,4-Dimethylphenol				3.7			
Naphthalene			4.4	1.7		4000	7600
4-Chloroaniline							2300 ?
2-Methylnaphthalene			0.88			1800	
Acenaphthylene						27	
Acenaphthene		0.91				670	1000
Dibenzofuran		0.79				760	880
Fluorene		1.1				760	1100
Phenanthrene		2.8				1400	2900
Anthracene						600	700
Fluoranthene		0.46				680	680
Pyrene						840	
Benzo(a)Anthracene (carc.)						220	
Bis(2-Ethylhexyl)Phthalate							
Chrysene (carc.)						210	
Benzo(b)Fluoranthene (carc.)						73	
Benzo(k)Fluoranthene (carc.)						71	
Benzo(a)Pyrene (carc.)						97	
Indeno(1,2,3-c,d)Pyrene (carc.)						35	
Dibenzo(a,h)Anthracene (carc.)							
Benzo(g,h,i,)Perylene						40	
Beta-BHC							
Total Phenols	95	0	0	51.8	60	0	0
Total non-carc. PNAs	0	6.06	5.28	1.7	0	11577	17160
Total carc. PNAs	0	0	0	0	0	706	0
Total PNAs	0	6.06	5.28	1.7	0	12283	17160
Total Pesticides							
Typical Detection Level	12	0.38	0.4	0.39	3.9	23	580

TABLE 2: SOIL INVESTIGATION DATA, NEW SLIP AREA

Boring No.:	S-58	S-58	S-58	S-58	S-59	S-59	S-60
Canonie I.D. #:	DUP-09	DUP-09	S-58-02	S-58-03	S-59-03	S-59-03	S-60-01
CompuChem I.D. #:	080792	D80792	080788	080789	079546	D79546	078[illegible]
Sample Depth (feet):	5	5	15	24	24	24	5
Concentration	(ppm)	(ppm)	(ppm)	(ppm)	(ppm)	(ppm)	(ppm)
Chemical Name							
Phenol				7.5	48	91	
2-Methylphenol					7.9		
4-Methylphenol				15	31	40	
2,4-Dimethylphenol				2	3.2		
Naphthalene	910	2100	29		5		6.1
4-Chloroaniline							
2-Methylnaphthalene	480	610			0.71		0.69
Acenaphthylene							4.8
Acenaphthene	220	250					37
Dibenzofuran	260						28
Fluorene	320	270					65
Phenanthrene	470	840			0.58		99
Anthracene	460	530					29
Fluoranthene	270						6.3
Pyrene	240						59
Benzo(a)Anthracene (carc.)	45						84
Bis(2-Ethylhexyl)Phthalate							
Chrysene (carc.)	47						45
Benzo(b)Fluoranthene (carc.)							55
Benzo(k)Fluoranthene (carc.)							55
Benzo(a)Pyrene (carc.)							27
Indeno(1,2,3-c,d)Pyrene (carc.)							8.8
Dibenzo(a,h)Anthracene (carc.)							4
Benzo(g,h,i,)Perylene							6.5
Beta-BHC							
Total Phenols	0	0	0	24.5	90.1	131	0
Total non-carc. PNAs	3630	4600	29	0	6.29	0	341.39
Total carc. PNAs	92	0	0	0	0	0	278.8
Total PNAs	3722	4600	29	0	6.29	0	620.19
Total Pesticides							
Typical Detection Level	24	240	24	1.1	0.4	8	0.39

TABLE 2: SOIL INVESTIGATION DATA, NEW SLIP AREA

Boring No.:	S-60	S-60	S-60	S-60	S-61	S-61	S-61
Canonie I.D. #:	S-60-01	S-60-02	S-60-03	S-60-03	S-61-01	S-61-01	S-61-02
CompuChem I.D. #:	*D78660*	*078661*	*078662*	*D78662*	*078811*	*D78811*	*078812*
Sample Depth (feet):	5	15	24	24	5	5	15
Concentration	(ppm)	(ppm)	(ppm)	(ppm)	(ppm)	(ppm)	(ppm)
Chemical Name							
Phenol			47	46			
2-Methylphenol			6.5	4.9			
4-Methylphenol			22	16			
2,4-Dimethylphenol			2.4				
Naphthalene		26	2.6		11	26	5.9
4-Chloroaniline							
2-Methylnaphthalene		8.3			1.6		2.1
Acenaphthylene					1.2		
Acenaphthene	56	8.5			9.7	11	2
Dibenzofuran	47	6.2			8	8	1.7
Fluorene	140	7.5			9.9	9.8	2.2
Phenanthrene	540	20			21	38	0.43
Anthracene	87				7.2	8.6	
Fluoranthene	320	8.8			17	38	
Pyrene	190	6.3			8.5	18	
Benzo(a)Anthracene (carc.)	40				7.8	6.3	
Bis(2-Ethylhexyl)Phthalate							0.6
Chrysene (carc.)	47				8.4	9.5	
Benzo(b)Fluoranthene (carc.)					13	8.9	
Benzo(k)Fluoranthene (carc.)					13	8.9	
Benzo(a)Pyrene (carc.)					5.2		
Indeno(1,2,3-c,d)Pyrene (carc.)					2.1		
Dibenzo(a,h)Anthracene (carc.)					0.9		
Benzo(g,h,i,)Perylene					1.7		
Beta-BHC							
Total Phenols	0	0	77.9	66.9	0	0	0
Total non-carc. PNAs	1380	91.6	2.6	0	96.8	157.4	14.93
Total carc. PNAs	87	0	0	0	50.4	33.6	0
Total PNAs	1467	91.6	2.6	0	147.2	191	14.93
Total Pesticides							
Typical Detection Level	39	2	2	4	0.39	3.1	0.4

TABLE 2: SOIL INVESTIGATION DATA, NEW SLIP AREA

Boring No.:	S-61	S-61	S-62	S-62	S-62	S-62	S-62
Canonie I.D. #:	S-61-03	S-61-03	S-62-01	S-62-02	DUP-04	S-62-03	S-62-03
CompuChem I.D. #:	078813	D78813	079352	079353	079364	079359	D79359
Sample Depth (feet):	24	24	5	15	15	24	24
Concentration	(ppm)	(ppm)	(ppm)	(ppm)	(ppm)	(ppm)	(ppm)
Chemical Name							
Phenol	68	100				33	63
2-Methylphenol	16					6.1	5
4-Methylphenol	39	38				19	25
2,4-Dimethylphenol	6.2					2.7	
Naphthalene	9.7	9.6	0.91		0.44		
4-Chloroaniline							
2-Methylnaphthalene	3.3						
Acenaphthylene	0.54						
Acenaphthene	3.3		2.4				
Dibenzofuran	2.5		1.7				
Fluorene	3.4		2				
Phenanthrene	9		2.4				
Anthracene	0.82						
Fluoranthene	4.4		2.7				
Pyrene	2.5		1.5				
Benzo(a)Anthracene (carc.)	0.95		0.58				
Bis(2-Ethylhexyl)Phthalate	0.43						
Chrysene (carc.)	0.8		0.64				
Benzo(b)Fluoranthene (carc.)	0.71		0.59				
Benzo(k)Fluoranthene (carc.)	0.69		0.59				
Benzo(a)Pyrene (carc.)							
Indeno(1,2,3-c,d)Pyrene (carc.)							
Dibenzo(a,h)Anthracene (carc.)							
Benzo(g,h,i,)Perylene							
Beta-BHC							
Total Phenols	129.2	138	0	0	0	60.8	93
Total non-carc. PNAs	39.89	9.6	13.61	0	0.44	0	0
Total carc. PNAs	3.15	0	2.4	0	0	0	0
Total PNAs	43.04	9.6	16.01	0	0.44	0	0
Total Pesticides							
Typical Detection Level	0.4	8.1	0.39	0.41	0.4	0.39	3.9

TABLE 2: SOIL INVESTIGATION DATA, NEW SLIP AREA

Boring No.:	S-63	S-63	S-63	S-63	S-64	S-64	S-64
Canonie I.D. #:	S-63-01	S-63-02	S-63-03	S-63-03	S-64-01	S-64-02	S-64-03
CompuChem I.D. #:	079361	079362	079363	D79363	079548	079549	079550
Sample Depth (feet):	5	15	24	24	5	15	24
Concentration	(ppm)	(ppm)	(ppm)	(ppm)	(ppm)	(ppm)	(ppm)
Chemical Name							
Phenol			36	80			43
2-Methylphenol			7.1	6.3			8.2
4-Methylphenol			22	33			28
2,4-Dimethylphenol			3.7				3.8
Naphthalene		0.52				1.3	
4-Chloroaniline							
2-Methylnaphthalene							
Acenaphthylene							
Acenaphthene	5.8				2.4		
Dibenzofuran	4.4				0.41		
Fluorene	4.5						
Phenanthrene							
Anthracene							
Fluoranthene							
Pyrene							
Benzo(a)Anthracene (carc.)							
Bis(2-Ethylhexyl)Phthalate							
Chrysene (carc.)							
Benzo(b)Fluoranthene (carc.)							
Benzo(k)Fluoranthene (carc.)							
Benzo(a)Pyrene (carc.)							
Indeno(1,2,3-c,d)Pyrene (carc.)							
Dibenzo(a,h)Anthracene (carc.)							
Benzo(g,h,i,)Perylene							
Beta-BHC							
Total Phenols	0	0	68.8	119.3	0	0	83
Total non-carc. PNAs	14.7	0.52	0	0	2.81	1.3	0
Total carc. PNAs	0	0	0	0	0	0	0
Total PNAs	14.7	0.52	0	0	2.81	1.3	0
Total Pesticides							
Typical Detection Level	0.4	0.4	0.41	6.1	0.4	0.4	0.4

TABLE 2: SOIL INVESTIGATION DATA, NEW SLIP AREA

Boring No.:	S-64	S-65	S-65	S-65	S-65	S-67	S-67
Canonie I.D. #:	S-64-03	S-65-01	S-65-02	S-65-03	S-65-03	S-67-01	S-67-02
CompuChem I.D. #:	D79550	080760	080790	080791	D80791	079771	079778
Sample Depth (feet):	24	5	15	24	24	5	16
Concentration	(ppm)	(ppm)	(ppm)	(ppm)	(ppm)	(ppm)	(ppm)
Chemical Name							
Phenol	93		1.4	93	39		
2-Methylphenol				16			
4-Methylphenol	40		0.61	43	16		
2,4-Dimethylphenol				5.3			
Naphthalene			5.6	15			
4-Chloroaniline							
2-Methylnaphthalene			0.57				
Acenaphthylene							
Acenaphthene							
Dibenzofuran		0.45					
Fluorene		1.3					
Phenanthrene		1.3					1.7
Anthracene		0.79					
Fluoranthene		1					1.5
Pyrene		0.66					0.91
Benzo(a)Anthracene (carc.)							0.42
Bis(2-Ethylhexyl)Phthalate							
Chrysene (carc.)							
Benzo(b)Fluoranthene (carc.)							
Benzo(k)Fluoranthene (carc.)							
Benzo(a)Pyrene (carc.)							
Indeno(1,2,3-c,d)Pyrene (carc.)							
Dibenzo(a,h)Anthracene (carc.)							
Benzo(g,h,i)Perylene							
Beta-BHC							
Total Phenols	133	0	2.01	157.3	55	0	0
Total non-carc. PNAs	0	5.5	6.17	15	0	0	4.11
Total carc. PNAs	0	0	0	0	0	0	0.42
Total PNAs	0	5.5	6.17	15	0	0	4.53
Total Pesticides							
Typical Detection Level	8	0.39	0.4	2	12	0.39	0.39

TABLE 2. SOIL INVESTIGATION DATA, NEW SLIP AREA

Boring No.:	S-67	S-67	S-68	S-68	S-68	S-68	S-68
Canonie I.D. #:	S-67-03	S-67-03	S-68-01	S-68-02	S-68-03	S-68-03	DUP-06
CompuChem I.D. #:	079783	D79783	079748	079753	079755	D79755	079784
Sample Depth (feet):	25	25	5	15	24	24	24
Concentration	(ppm)	(ppm)	(ppm)	(ppm)	(ppm)	(ppm)	(ppm)
Chemical Name							
Phenol	76	58			120	110	79
2-Methylphenol	11				19		21
4-Methylphenol	51	28			73	43	54
2,4-Dimethylphenol	6.8				6.7		14
Naphthalene				1.7			0.9
4-Chloroaniline							
2-Methylnaphthalene							
Acenaphthylene							
Acenaphthene			7.5				
Dibenzofuran			5.3				
Fluorene			4.6				
Phenanthrene	0.51		4.4	0.68			0.72
Anthracene							
Fluoranthene	0.44		16				
Pyrene			8.6				
Benzo(a)Anthracene (carc.)			2.6				
Bis(2-Ethylhexyl)Phthalate							
Chrysene (carc.)			3.7				
Benzo(b)Fluoranthene (carc.)			3.4				
Benzo(k)Fluoranthene (carc.)			3.4				
Benzo(a)Pyrene (carc.)							
Indeno(1,2,3-c,d)Pyrene (carc.)							
Dibenzo(a,h)Anthracene (carc.)							
Benzo(g,h,i,)Perylene							
Beta-BHC							
Total Phenols	144.8	86	0	0	218.7	153	168
Total non-carc. PNAs	0.95	0	46.4	2.38	0	0	1.62
Total carc. PNAs	0	0	13.1	0	0	0	0
Total PNAs	0.95	0	59.5	2.38	0	0	1.62
Total Pesticides							
Typical Detection Level	0.41	8.1	1.9	0.4	0.4	16	0.42

TABLE 2: SOIL INVESTIGATION DATA, NEW SLIP AREA

Boring No.:	S-68	S-70	S-70	S-70	S-70	S-70	S-70
Canonie I.D. #:	DUP-06	S-70-01	S-70-01	S-70-02	DUP-05	S-70-03	S-70-03
CompuChem I.D. #:	J79784	J79551	079551	079552	079554	079553	D79553
Sample Depth (feet):	24	5	5	15	15	24	24
Concentration	(ppm)	(ppm)	(ppm)	(ppm)	(ppm)	(ppm)	(ppm)
Chemical Name							
Phenol	210					30	55
2-Methylphenol						6.4	
4-Methylphenol	79					20	20
2,4-Dimethylphenol						3.1	
Naphthalene				5.4	4.7		
4-Chloroaniline							
2-Methylnaphthalene							
Acenaphthylene		0.81					
Acenaphthene							
Dibenzofuran							
Fluorene							
Phenanthrene		1.7					
Anthracene		1.5					
Fluoranthene		24	51				
Pyrene		22	27				
Benzo(a)Anthracene (carc.)		5	9.2				
Bis(2-Ethylhexyl)Phthalate							
Chrysene (carc.)		5.7	11				
Benzo(b)Fluoranthene (carc.)		5.8	5.6				
Benzo(k)Fluoranthene (carc.)		7.5	11				
Benzo(a)Pyrene (carc.)		5	5.6				
Indeno(1,2,3-c,d)Pyrene (carc.)		1.9					
Dibenzo(a,h)Anthracene (carc.)		1.1					
Benzo(g,h,i,)Perylene		1.7					
Beta-BHC							
Total Phenols	289	0	0	0	0	59.5	75
Total non-carc. PNAs	0	51.71	78	5.4	4.7	0	0
Total carc. PNAs	0	32	42.4	0	0	0	0
Total PNAs	0	83.71	120.4	5.4	4.7	0	0
Total Pesticides							
Typical Detection Level	21	0.79	3.9	0.41	0.4	0.4	8

TABLE 2: SOIL INVESTIGATION DATA, NEW SLIP AREA

Boring No.:	S-71	S-71	S-71	S-71	S-71	S-80	S-80
Canonie I.D. #:	S-71-01	S-71-01	S-71-02	S-71-03	S-71-03	S-80-01	S-80-01
CompuChem I.D. #:	080566	D80566	080567	080568	D80568	080312	D80312
Sample Depth (feet):	5	5	15	25.5	25.5	5	5
Concentration	(ppm)	(ppm)	(ppm)	(ppm)	(ppm)	(ppm)	(ppm)
Chemical Name							
Phenol				82	82		
2-Methylphenol				10			
4-Methylphenol				45	35		
2,4-Dimethylphenol				5.6			
Naphthalene			1			3.4	4
4-Chloroaniline							
2-Methylnaphthalene							
Acenaphthylene	0.41						
Acenaphthene	2.6	1.9				7.5	20
Dibenzofuran	2.9	2.4				0.72	
Fluorene	0.47	3.6				0.81	
Phenanthrene	1.1						
Anthracene	0.77						
Fluoranthene	8.1	5.9					
Pyrene	6.6	5.7				0.42	
Benzo(a)Anthracene (carc.)	0.79						
Bis(2-Ethylhexyl)Phthalate							
Chrysene (carc.)	1.4	1.1					
Benzo(b)Fluoranthene (carc.)	3.2	2.6					
Benzo(k)Fluoranthene (carc.)	3.2	2.6					
Benzo(a)Pyrene (carc.)	1.8	1.5					
Indeno(1,2,3-c,d)Pyrene (carc.)	0.83						
Dibenzo(a,h)Anthracene (carc.)							
Benzo(g,h,i,)Perylene	0.79						
Beta-BHC							
Total Phenols	0	0	0	142.6	117	0	0
Total non-carc. PNAs	23.74	19.5	1	0	0	12.85	24
Total carc. PNAs	11.22	7.8	0	0	0	0	0
Total PNAs	34.96	27.3	1	0	0	12.85	24
Total Pesticides							
Typical Detection Level	0.4	0.8	0.4	0.4	12	0.42	2.1

TABLE 2: SOIL INVESTIGATION DATA, NEW SLIP AREA

Boring No.:	S-80	S-80	S-80	S-80	S-90	S-90	S-90
Canonie I.D. #:	S-80-02	DUP-08	DUP-08	S-80-03	S-90-01	S-90-02	S-90-02
CompuChem I.D. #:	080313	080315	D80315	080314	0289150	0289151	D289151
Sample Depth (feet):	15	15	15	24	5	15	15
Concentration	(ppm)	(ppm)	(ppm)	(ppm)	(ppm)	(ppm)	(ppm)
Chemical Name							
Phenol	28	16	31	2.8		4	4.1
2-Methylphenol	2.2	3.2	3.5			2.5	2.3
4-Methylphenol	14	12	16	5.5		20	24
2,4-Dimethylphenol		1.9		2.6		5.3	4.7
Naphthalene		2	2.6	3.3			
4-Chloroaniline							
2-Methylnaphthalene							
Acenaphthylene							
Acenaphthene							
Dibenzofuran							
Fluorene							
Phenanthrene							
Anthracene							
Fluoranthene							
Pyrene							
Benzo(a)Anthracene (carc.)							
Bis(2-Ethylhexyl)Phthalate							
Chrysene (carc.)							
Benzo(b)Fluoranthene (carc.)							
Benzo(k)Fluoranthene (carc.)							
Benzo(a)Pyrene (carc.)							
Indeno(1,2,3-c,d)Pyrene (carc.)							
Dibenzo(a,h)Anthracene (carc.)							
Benzo(g,h,i,)Perylene							
Beta-BHC							
Total Phenols	44.2	33.1	50.5	10.9	0	31.8	35.1
Total non-carc. PNAs	0	2	2.6	3.3	0	0	0
Total carc. PNAs	0	0	0	0	0	0	0
Total PNAs	0	2	2.6	3.3	0	0	0
Total Pesticides							
Typical Detection Level	2	0.4	2	0.8	0.38	0.38	1.9

TABLE 2: SOIL INVESTIGATION DATA, NEW SLIP AREA

Boring No.:	S-90	S-90	S-90	S-91	S-91	S-91	S-92
Canonie I.D. #:	DUP-10	S-90-03	S-90-03	S-91-01	S-91-02	S-91-03	S-92-01
CompuChem I.D. #:	0289156	0289152	D289152	289153	289154	289155	288143
Sample Depth (feet):	15	24	24	5	15	25.5	5
Concentration	(ppm)	(ppm)	(ppm)	(ppm)	(ppm)	(ppm)	(ppm)
Chemical Name							
Phenol		33	41			62	
2-Methylphenol		7.8	6.9		0.48	6.4	
4-Methylphenol		34	41		4.1	34	
2,4-Dimethylphenol		6.9	5.8		2.2		
Naphthalene							
4-Chloroaniline							
2-Methylnaphthalene							
Acenaphthylene							
Acenaphthene							
Dibenzofuran							
Fluorene							
Phenanthrene							
Anthracene							
Fluoranthene							
Pyrene							
Benzo(a)Anthracene (carc.)							
Bis(2-Ethylhexyl)Phthalate							
Chrysene (carc.)							
Benzo(b)Fluoranthene (carc.)							
Benzo(k)Fluoranthene (carc.)							
Benzo(a)Pyrene (carc.)							
Indeno(1,2,3-c,d)Pyrene (carc.)							
Dibenzo(a,h)Anthracene (carc.)							
Benzo(g,h,i)Perylene							
Beta-BHC							
Total Phenols	0	81.7	94.7	0	6.78	102.4	0
Total non-carc. PNAs	0	0	0	0	0	0	0
Total carc. PNAs	0	0	0	0	0	0	0
Total PNAs	0	0	0	0	0	0	0
Total Pesticides							
Typical Detection Level	0.39	0.39	3.9	0.38	0.4	5.5	0.39

TABLE 2: SOIL INVESTIGATION DATA, NEW SLIP AREA

Boring No.:	S-92	S-92	S-92
Canonie I.D. #:	S-92-02	S-92-03	S-92-03
CompuChem I.D. #:	288136	288144	D288144
Sample Depth (feet):	15	26.5	26.5
Concentration	(ppm)	(ppm)	(ppm)
Chemical Name			
Phenol	0.84	13	16
2-Methylphenol	1.6	2.4	2.5
4-Methylphenol	3.4	16	18
2,4-Dimethylphenol	1	3.5	3.3
Naphthalene			
4-Chloroaniline			
2-Methylnaphthalene			
Acenaphthylene			
Acenaphthene			
Dibenzofuran			
Fluorene			
Phenanthrene			
Anthracene			
Fluoranthene			
Pyrene			
Benzo(a)Anthracene (carc.)			
Bis(2-Ethylhexyl)Phthalate			
Chrysene (carc.)			
Benzo(b)Fluoranthene (carc.)			
Benzo(k)Fluoranthene (carc.)			
Benzo(a)Pyrene (carc.)			
Indeno(1,2,3-c,d)Pyrene (carc.)			
Dibenzo(a,h)Anthracene (carc.)			
Benzo(g,h,i,)Perylene			
Beta-BHC			
Total Phenols	6.84	34.9	39.8
Total non-carc. PNAs	0	0	0
Total carc. PNAs	0	0	0
Total PNAs	0	0	0
Total Pesticides			
Typical Detection Level	0.39	0.37	1.5

Waukegan I
Grou

TABLE 3

TEST RESULTS
GROUND WATER MONITORING WELLS
NEW SLIP AREA

Chemical	Monitoring Well MW-1(S)	Monitoring Well MW-1(D)	Monitoring Well MW-2(S)	Monitoring Well MW-2(D)
Phenol		160	-	76
2-Methylphenol		27		7.3
4-Methylphenol		100		45
2,4-Dimethylphenol		9		
Naphthalene	0.72			
2-Methylnaphthalene	0.07			
Acenophthene	0.1			
Dibenzofuran	0.062			
Fluorene	0.057			
Phenanthrene	0.047			
Monitoring Well Screen Interval, Feet Below Ground Surface	12.5-17.5	22.7-27.7	12.5-17.5	23.0-28.0

Notes:

1. See Figure 1 for monitoring well locations.

Append

1989 IEPA Soil Inve

State of Illinois
ENVIRONMENTAL PROTECTION AGENCY

Mary A. Gade, Director
(217) 782-9882

2200 Churchill Road, Springfield, IL 62794-9276

RECEIVED
NOV 22 93
BARR ENGINEERING

November 18, 1993

Michael Relf
Barr Engineering Company
8300 Norman Center Drive
Minneapolis, MN 55437-1026

Dear Mr. Relf:

Enclosed is some of the information you asked for. Specifically Johns-Manville RI/FS, and type written data from soils analysis.

If you have any questions please call.

Sincerely,

Jerry Willman
Project Manager
Remedial Project Management Unit
Bureau of Land

Printed on Recycled Paper

U.M. CASE PLANT
ILD 980993570

TABLE 4-1
SUMMARY

SAMPLING POINT	X 101	X 101S	X 102	X 103	X 104	X 105	X 106	X 106S	X 107	X 107S	X 108	BLANK
PARAMETER	6-14-89	6-14-89	6-14-89	6-14-89	6-14-89	6-14-89	6-14-89	6-14-89	6-14-89	6-14 8	6-14-8	6 14-89
VOLATILES (ug/kg)												
Chloromethane	--	--	--	--	--	--	--	--	--	--	--	--
Bromomethane	--	--	--	--	--	--	--	--	--	--	--	--
Vinyl Chloride	--	--	--	--	--	--	--	--	--	--	--	--
Chloroethane	--	--	--	--	--	--	--	--	--	--	--	--
Methylene Chloride	6.0 U	26.0	9.0	33.0	--	--	29.0	54.0	34.0	68.0	17.0	0.3 J
Acetone	--	41.0 J	150.0	170.0 J	1600.0 J	--	160.0 J	11.0 J	20.0	15.0 J	260.0	--
Carbon Disulfide	--	--	--	--	--	--	1.0 J	--	--	--	--	0.1 J
1,1-Dichloroethene	--	--	--	--	--	--	--	--	--	--	--	--
1,1-Dichloroethane	--	--	--	--	--	--	--	--	--	--	--	--
1,2-Dichloroethene(total)	--	--	--	--	--	--	--	--	--	--	--	--
Chloroform	--	--	--	--	--	--	--	--	--	--	--	--
1,2-Dichloroethane	--	--	--	--	--	--	--	--	--	--	--	--
2-Butanone (MEK)	12.0 R	11.0 R	13.0 R	13.0 R	1100.0 R	12.0 R	11.0 R	11.0 R	11.0 R	11.0 R	13.0 R	10.0 R
1,1,1-Trichloroethane	--	--	--	--	--	--	--	--	--	--	--	--
Carbon Tetrachloride	--	--	--	--	--	--	--	--	--	--	--	--
Vinyl Acetate	--	--	--	--	--	--	--	--	--	--	--	--
Bromodichloromethane	--	--	--	--	--	--	--	--	--	--	--	--
1,2-Dichloropropane	--	--	--	--	--	--	--	--	--	--	--	--
cis-1,3-Dichloropropene	--	--	--	--	--	--	--	--	--	--	--	--
Trichloroethene	--	--	--	--	--	--	--	--	--	--	--	--
Dibromochloromethane	--	--	--	--	--	--	--	--	--	--	--	--
1,1,2-Trichloroethane	--	--	--	--	--	--	--	--	--	--	--	--
Benzene	--	2.0 J	--	0.8 J	1800.0	--	6.0 J	3.0 J	2.0 J	4.0 J	0.9 J	--
Trans-1,3-Dichloropropene	--	--	--	--	--	--	--	--	--	--	--	--
Bromoform	--	--	--	--	--	--	--	--	--	--	--	--
4-Methyl-2-Pentanone	--	--	--	--	--	--	--	--	--	--	--	--
2-Hexanone	--	--	--	--	--	--	--	--	--	--	--	--
Tetrachloroethene	--	--	--	--	--	--	--	--	--	--	--	--
Toluene	--	2.0 J	--	--	1900.0	230.0 J	1.0 J	1.0 J	2.0 J	2.0 J	--	--
1,1,2,2-Tetrachloroethane	--	--	--	--	--	--	--	--	--	--	--	--
Chlorobenzene	--	--	--	--	--	--	--	--	--	--	--	--
Ethylbenzene	--	--	--	--	610.0	--	0.8 J	--	3.0 J	--	--	--
Styrene	--	--	--	--	410.0 J	--	--	--	--	--	--	--
Xylene(total)	--	--	--	--	8500.0	1800.0	11.0	0.6 J	--	1.0 J	--	--
SEMIVOLATILES (ug/kg)												
Phenol	--	--	--	--	1500.0	--	210.0 J	--	--	--	--	--
bis(2-Chloroethyl) ether	--	--	--	--	--	--	--	--	--	--	--	--
2-Chlorophenol	--	--	--	--	--	--	--	--	--	--	--	--
1,3-Dichlorobenzene	--	--	--	--	--	--	--	--	--	--	--	--
1,4-Dichlorobenzene	--	--	--	--	--	--	--	--	--	--	--	--
Benzyl Alcohol	--	--	--	--	--	--	--	--	--	--	--	--
1,2-Dichlorobenzene	--	--	--	--	--	--	--	--	--	--	--	--
2-Methylphenol	--	--	--	--	--	--	--	--	--	--	--	--
bis(2-Chloroisopropyl)ether	--	--	--	--	--	--	--	--	--	--	--	--
4-Methylphenol	--	--	--	--	2700.0	--	--	--	--	--	--	--
N-Nitroso-di-n-Dipropylamine	--	--	--	--	--	--	--	--	--	--	--	--
Hexachloroethane	--	--	--	--	--	--	--	--	--	--	--	--
Nitrobenzene	--	--	--	--	--	--	--	--	--	--	--	--
Isophorone	--	--	--	--	--	--	--	--	--	--	--	--
2-Nitrophenol	--	--	--	--	--	--	--	--	--	--	--	--
2,4-Dimethylphenol	--	--	--	--	--	--	--	--	--	--	--	--
Benzoic acid	--	--	7800.0 R	4000.0 R	--	--	4700.0 R	--	--	6800.0 R	3900.0 R	--
bis(2Chloroethoxy) Methane	--	--	--	--	--	--	--	--	--	--	--	--
2,4-Dichlorophenol	--	--	--	--	--	--	--	--	--	--	--	--
1,2,4-Trichlorobenzene	--	--	--	--	--	--	--	--	--	--	--	--
Naphthalene	7100.0 J	32000.0	220.0 J	1100.0	1300000.0 D	130000.0	14000.0	16000.0 J	9600.0	2000.0	--	--
4-Chloroaniline	--	--	--	--	--	--	--	--	--	--	--	--
Hexachlorobutadiene	--	--	--	--	--	--	--	--	--	--	--	--
4-Chloro-3-Methylphenol	--	--	--	--	--	--	--	--	--	--	--	--
2-Methylnaphthalene	6300.0	21000.0	66.0 J	280.0 J	140000.0 D	93000.0	650.0 J	2300.0 J	5200.0 J	1200.0 J	--	--
Hexachlorocyclopentadiene	--	--	--	--	--	--	--	--	--	--	--	--
2,4,6-Trichlorophenol	--	--	--	--	--	--	--	--	--	--	--	--
2,4,5-Trichlorophenol	--	--	--	--	--	--	--	--	--	--	--	--

G.M. LUKE PLANT
ILD 980993570

TABLE 4-1
SUMMARY

SAMPLING POINT	X 101 6-14-89	X 101S 6-14-89	X 102 6-14-89	X 103 6-14-89	X 104 6-14-89	X 105 6-14-89	X 106 6-14-89	X 106S 6-14-89	X 107 6-14-89	X 107S 6-14-89	X 108 6-14-89	BLANK 6-14-89
PARAMETER												
2-Chloronaphthalene	--	--	--	--	--	--	--	--	--	--	--	--
2-Nitroaniline	--	--	--	--	--	--	--	--	--	--	--	
Dimethylphthalate	--	--	--	--	--	--	--	--	--	--	--	--
Acenaphthylene	5900.0 J	15000.0	200.0 J	--	45000.0 D	2700.0 J	--	1900.0 J	1600.0 J	1100.0 J	--	--
2,6-Dinitrotoluene	--	--	--	--	--	--	--	--	--	--	--	--
3-Nitroaniline	--	--	--	--	--	--	--	--	--	--	--	--
Acenaphthene	2100.0 J	6300.0 J	110.0 J	--	7000.0	2000.0 J	54.0 J	--	--	130.0 J	--	--
2,4-Dinitrophenol	--	--	--	--	--	--	--	--	--	--	--	--
4-Nitrophenol	--	--	--	--	--	--	--	--	--	--	--	--
Dibenzofuran	21000.0	54000.0	230.0 J	150.0 J	38000.0 D	10000.0 J	250.0 J	1400.0 J	1900.0 J	1600.0	--	--
2,4-Dinitrotoluene	--	--	--	--	--	--	--	--	--	--	--	--
Diethylphthalate	--	--	--	--	--	--	--	--	--	--	--	--
4-Chlorophenyl-phenyl ether	--	--	--	--	--	--	--	--	--	--	--	--
Fluorene	24000.0	98000.0	380.0 J	210.0 J	40000.0 D	11000.0	320.0 J	1500.0 J	--	3100.0	--	--
4-Nitroaniline	--	--	--	--	--	--	--	--	--	--	--	--
4,6-Dinitro-2-Methylphenol	--	--	--	--	--	--	--	--	--	--	--	--
N-Nitrosodiphenylamine	--	--	--	--	--	--	--	--	--	--	--	--
4-Bromophenyl-phenylether	--	--	--	--	--	--	--	--	--	--	--	--
Hexachlorobenzene	--	--	--	--	--	--	--	--	--	--	--	--
Pentachlorophenol	--	--	--	--	--	--	--	--	--	--	--	--
Phenanthrene	210000.0 D	370000.0 D	1900.0 J	1100.0	50000.0 D	24000.0	430.0 J	8200.0 J	12000.0 J	15000.0	140.0 J	--
Anthracene	29000.0	76000.0	370.0 J	160.0 J	10000.0	2700.0 J	180.0 J	2800.0 J	1100.0 J	2200.0	9.0 J	--
Di-n-Butylphthalate	--	--	--	--	--	--	90.0 J	--	--	--	--	--
Fluoranthene	460000.0 D	370000.0 D	6700.0 J	1400.0	15000.0	8900.0 J	470.0 J	15000.0 J	11000.0 J	16000.0	200.0 J	--
Pyrene	170000.0 D	260000.0 D	4200.0 J	800.0 J	8700.0	6300.0 J	420.0 J	11000.0 J	7500.0 J	8200.0 J	120.0 J	--
Butylbenzylphthalate	--	--	--	--	--	--	350.0 J	--	--	--	--	--
3,3'-Dichlorobenzidine	--	--	--	--	--	--	1100.0 J	--	--	--	--	--
Benzo(a)anthracene	120000.0	150000.0 D	4000.0	860.0	8500.0	3300.0 J	560.0 J	9600.0 J	8900.0 J	10000.0	210.0 J	--
Chrysene	110000.0	160000.0 D	3200.0	710.0 J	6600.0	3400.0 J	530.0 J	7900.0 J	6800.0 J	7900.0	170.0 J	--
bis(2-Ethylhexyl)phthalate	--	--	--	--	--	--	--	--	--	--	--	100.0 J
Di-n-Octylphthalate	--	--	--	--	--	--	110.0 J	--	--	--	--	--
Benzo(b)fluoranthene	120000.0 J	97000.0 DJ	5000.0 J	820.0 J	7900.0	--	580.0 J	11000.0 J	--	8100.0 J	--	--
Benzo(k)fluoranthene	91000.0 J	110000.0 J	3900.0 J	500.0 J	5200.0	--	500.0 J	8700.0 J	--	6200.0 J	--	--
Benzo(a)pyrene	94000.0 J	120000.0 J	3100.0	600.0 J	5000.0	--	570.0 J	6200.0 J	--	5400.0 J	--	--
Indeno(1,2,3-cd)pyrene	49000.0 J	60000.0 J	--	--	4500.0	--	370.0 J	--	--	--	--	--
Dibenz(a,h)anthracene	--	6300.0 J	--	--	1400.0 J	--	360.0 J	--	--	--	--	--
Benzo(g,h,i)perylene	--	49000.0 J	--	--	3300.0	--	--	--	--	2400.0	--	--
PESTICIDES (ug/kg)												
alpha-BHC	--	--	--	--	--	--	--	--	--	--	--	--
beta-BHC	--	--	--	--	--	--	--	--	--	--	--	--
delta-BHC	--	--	--	--	--	--	--	--	--	--	--	--
gamma-BHC (Lindane)	--	--	--	--	--	--	--	--	--	--	--	--
Heptachlor	--	--	--	--	--	--	--	--	--	--	--	--
Aldrin	--	--	--	--	--	--	--	--	--	--	--	--
Heptachlor epoxide	96.0 J	51.0 J	--	--	--	61.0 J	--	--	--	--	--	--
Endosulfan I	--	--	--	--	--	--	--	--	--	--	--	--
Dieldrin	--	--	--	--	--	--	--	--	--	--	--	--
4,4'-DDE	--	--	--	--	--	--	--	--	--	--	--	--
Endrin	--	--	--	--	--	--	--	--	--	--	--	--
Endosulfan II	--	--	--	--	--	--	--	--	--	--	--	--
4,4'-DDD	--	--	--	--	--	--	--	--	--	--	--	--
Endosulfan sulfate	--	--	--	--	--	--	--	--	--	--	--	--
4,4'-DDT	--	--	--	--	--	--	--	--	--	--	--	--
Methoxychlor (Marlate)	--	--	--	--	--	--	--	--	--	--	--	--
Endrin ketone	--	--	--	--	--	--	--	--	--	--	--	--
alpha-Chlordane	--	--	--	--	--	--	--	--	--	--	--	--
gamma-Chlordane	--	--	--	--	--	--	--	--	--	--	--	--
Toxaphene	--	--	--	--	--	--	--	--	--	--	--	--
Aroclor-1016	--	--	--	--	--	--	--	--	--	--	--	--
Aroclor-1221	--	--	--	--	--	--	--	--	--	--	--	--
Aroclor-1232	--	--	--	--	--	--	--	--	--	--	--	--
Aroclor-1242	--	--	--	--	--	--	--	--	--	--	--	--
Aroclor-1248	--	--	--	--	--	--	--	--	--	--	--	--
Aroclor-1254	--	--	--	--	--	--	--	--	--	--	--	--
Aroclor-1260	--	--	--	--	--	--	--	--	--	--	--	--

W.R. GRACE PLANT
ILD 980993570

TABLE 4-1
SUMMARY

SAMPLING POINT	X 101	X 101S	X 102	X 103	X 104	X 105	X 106	X 106S	X 107	X 107S	X 108	BLANK
PARAMETER	6-14-89	6-14-89	6-14-89	6-14-89	6-14-89	6-14-89	6-14-89	6-14-89	6-14-89	6-14-8	6-14-8	6-14-89
INORGANICS (ug/g)												
Aluminum	9240.0	4540.0	1000.0	2100.0	4500.0	140.0	4500.0	3500.0	6200.0	4500.0	2400.0	26.0 B
Antimony	0.4 U	0.3 U	0.4 U	0.4	1.0 B	43.1	1.1 B	0.3 U	0.6 B	0.5 B	0.3 U	0.4 U
Arsenic	11.5	8.5	2.3	29.3	914.0	956.0	78.0	16.0	85.0	32.0	3.8	0.2 U
Barium	50.0	62.0	8.9 B	18.0 B	39.0	4.5 B	46.0	58.0	130.0	76.0	15.0 B	0.3 U
Beryllium	2.0	1.8	0.8 B	1.2	2.6	0.6 B	3.2	10.0	11.0	7.6	2.9	0.1 U
Cadmium	1.4	1.7	1.0	0.9 B	1.2	1.6	1.4	1.3	2.9	2.1	1.9	0.2 U
Calcium	47600.0	17900.0	21700.0	26200.0	66500.0	1250.0	9700.0	22600.0	45200.0	33500.0	24300.0	27.4 U
Chromium	17.0	10.0	12.0	6.0	9.9	8.3	13.0	13.0	18.0	17.0	10.0	0.6 U
Cobalt	8.8	6.1 B	3.2 B	3.7 B	5.2 B	1.5 B	4.1 B	4.5 B	6.3 B	6.4 B	4.0 B	0.6 B
Copper	15.0	22.0	5.0	6.3	27.0	7.5	19.0	120.0	38.0	36.0	8.7	0.6 B
Iron	17400.0	9300.0	3200.0	3500.0	14800.0	490.0	2900.0	6300.0	23200.0	11600.0	3700.0	7.4 U
Lead	19.0	51.0	9.5	7.9	54.0	25.0	14.0	76.0	160.0	91.0	40.0	2.6 U
Magnesium	26500.0	8300.0	10400.0	12600.0	22700.0	140.0	6500.0	10000.0	17700.0	13000.0	11500.0	18.4 U
Manganese	490.0	158.0	110.0	120.0	280.0	47.0	74.0	240.0	344.0	320.0	130.0	0.2 U
Mercury	0.1	8.0	--	--	6.5	18.2	0.2	0.3	58.0	38.0	--	--
Nickel	19.0	11.0	5.5 B	5.3 B	12.0	4.0 B	9.1	13.0	16.0	15.0	8.8	1.1 B
Potassium	790.0 B	530.0 B	520.0 B	450.0 B	690.0 B	170.0 B	480.0 B	190.0 B	780.0	570.0 B	420.0 B	52.0 U
Selenium	0.2 U	0.9	0.2 B	0.8 B	0.6 B	2.0	14.1	0.5 B	1.3	0.6 B	0.2 U	0.2 U
Silver	0.8 B	0.5 B	1.3 B	0.8 B	0.1	1.4	2.0	1.4 B	1.9	1.4 B	0.7 B	0.9 B
Sodium	240.0 B	195.0 B	190.0 B	210.0 B	220.0 B	46.0 B	300.0 B	790.0 B	860.0	590.0 B	340.0 B	33.0 B
Thallium	0.2 U	0.3 B	0.2 U	0.2 U	0.1 U	0.2 U	0.2 U	0.1 U	0.2 B	0.3 B	0.1 U	0.2 U
Vanadium	26.0	15.0	8.7	11.0	14.0	2.1 B	15.0	13.0	18.0	15.0	9.4	0.4 B
Zinc	40.0	66.0	30.0	20.0	96.0	9.9	30.0	910.0	190.0	128.0	50.0	2.2 U
Cyanide	0.8 U	2.4	0.5 U	0.4 U	47.0	556.0	6.9	0.6 U	4.8	3.1	0.7 U	10.0 U

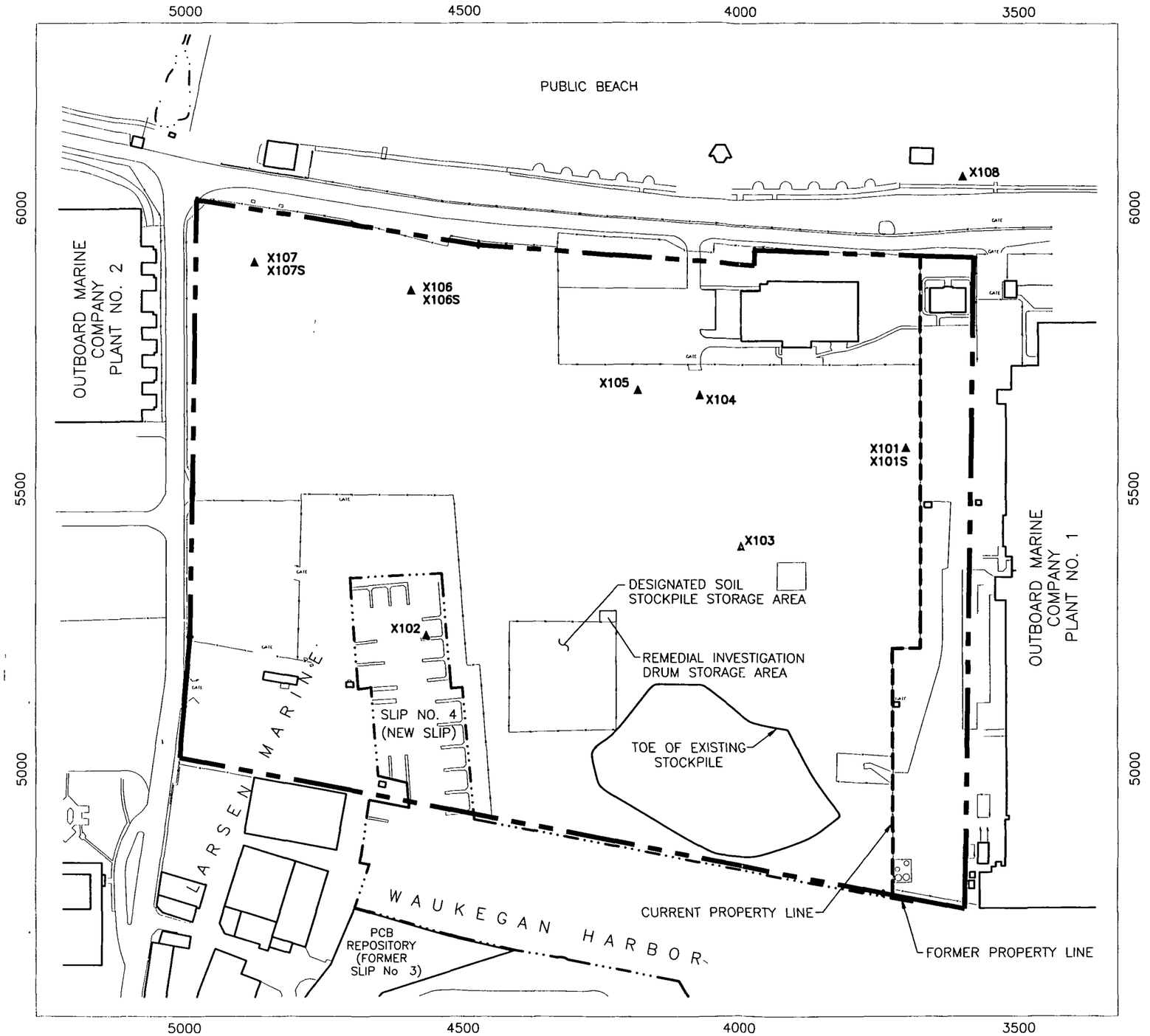

0 200
SCALE IN FEET

▲X103 Illinois Enviromental Protection Agency Soil Sample Location

Randy Wilson C:\PROJECTS\1349003\WAUK\WCP-IEPA 200 00 01/18/1994 10 42 07

Figure 3-D-1
I.E.P.A. SOIL INVESTIGATION
Waukegan Manufactured Gas & Coke Plant Site

Appendix

Sediment and Surface Water Quality

City of Waukegan Waterworks, Sampling Locations f
Samples Related to Benzene Problem in Cit

Risatti, Ross, and Burne

Canonie Environmenta
New Slip Inves

Hey and Associates, In
IEPA Sampling at the
of the Waukegan Wat

Hey and Associates, In
Waukegan Remedial Acti

IEP
North Shore Lake Survey Water Quality

City of Waukegan Wat
Routine Monit
Raw Surface Water at City Water

Sediment and Surface Water Quality Data

City of Waukegan
Samples

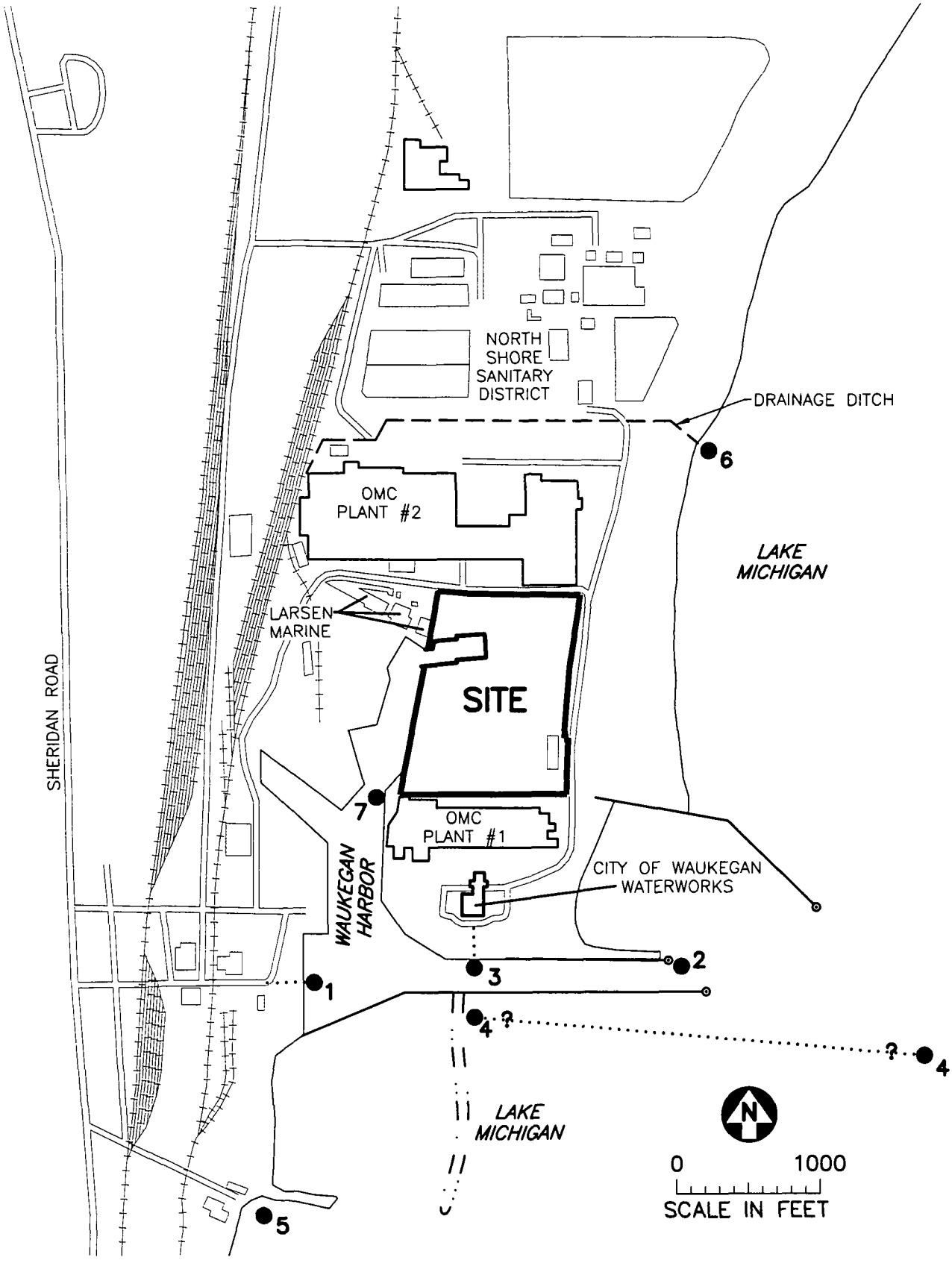

● Sampling Locations for 1988 Samples Related to Benzene Problem in City Water
–Locations per Jack Beck, former City Engineer of Waukegan

SAMPLING LOCATIONS FOR 1988 SAMPLES
RELATED TO BENZENE PROBLEM IN CITY WATER
Waukegan Manufactured Gas & Coke Plant Site

Randy Wilson C:\PROJECTS\1349003\WAUK\WCP-BENZ 1000 0000 01/24/ 11:37 51

GULF COAST LABORATORIES, INC.
2417 Bond St., University Park, Illinois 60466
Phones (312) 534-5200 (219) 885-7077 (815) 7__ /53

April 25, 1988

Mr. Howard Peskator
Waukegan Water Utility
106 North Utica
Waukegan, IL 60085

Dear Mr. Peskator:

Please find enclosed the analytical reports for the samples submitted to Gulf Coast Laboratories for analyses. They were identified as follows:

	CLIENT ID	GCL#	SAMPLE DATE	DATE RECEIVED
(1)	Storm Sewer Small Craft Dock	128699	04/21/88	04/21/88
(2)	Mouth of Harbor	128700	04/21/88	04/21/88
(3)	30" Drain & 30" Emergency Intake	128701	04/21/88	04/21/88
(4)	48" Intake	128702	04/21/88	04/21/88
(5)	Area of Paint Factory	128703	04/21/88	04/21/88
(6)	200 Feet East of North Ditch	128704	04/21/88	04/21/88
(7)	Johnson Testing Cell	128705	04/21/88	04/21/88

If you have any questions, please contact our laboratories.

Sincerely,

WESTON/GULF COAST LABORATORIES

John Boudreau

John Boudreau
Analytical Director

JB/kl

Enclosures

Illinois Environmental Protection Agency

D216752 (D)

[redacted]

PESTICIDES, PCB, ORGANICS
HERBICIDES

Waukegan
Fac No. 097 1900

Samples Scheduled During:

Date and Time in Laboratory:

Received By: AP MAY 1 1992

1. Mail Report To: Name: Frank Chess	2. Date Collected: 4/29/92	3. Time Collected: 11:30 AM
Address: City Hall, 106 North Utica St.	4. Sample Collector: E. ABAD/AE	
Post Office: Waukegan State: IL Zip Code: 60085	5. Sampling Point: Raw	
	6. Temperature: ☐ Celcius ☐ Fahrenheit	
	7. pH:	8. Chlorine Residual:

COLLECTOR: Fill in shaded area only. Type or use black ball point pen. See reverse side for explanations and instructions.

PARAMETER	Concentration µg/l	PARAMETER	Concentration µg/l
methylene chloride			
1,1-dichloroethane			
dichloroethylene			
chloroform			
1,2-dichloroethane			
1,1,1-trichloroethane			
carbon tetrachloride			
dichlorobromomethane			
trichloroethylene			
dibromochloromethane			
bromoform			
tetrachloroethylene			
benzene			
toluene			
chlorobenzene			
ethylbenzene			
xylenes (total)			
dichlorobenzene			

-Laboratory Use Only-

Laboratory Number: D216752

Date Forwarded: 5-28-92 By: J Hurley

-DPWS Use Only-

RECEIVED

JUN 01 1992

Environmental Protection Agency
State of Illinois

This Agency is authorized to require this information under ILLINOIS REVISED STATUTES, 1979, Chapter 111½, Sec. 1019. Disclosure of this information is required. Failure to do so may result in a civil penalty up to $10,000.00 and an additional civil penalty up to $1,000.00 for each day the failure continues, a fine up to $1,000.00 and imprisonment up to one year. This form has been approved by the Forms Management Center.

IL 532-1310
PMIS 149 2/85

AMPLE NUMBER : D216752

P34408	ISOPHORONE	UG/L	: 5.0K
P34591	2-NITROPHENOL	UG/L	: 5.0K
P34606	2,4-DIMETHYLPHENOL	UG/L	: 5.0K
P77247	BENZOIC ACID	UG/L	: 50K
P34278	BIS(2-CHLOROETHOXY)METHANE	UG/L	: 5.0K
P34601	2,4-DICHLOROPHENOL	UG/L	: 5.0K
P34551	1,2,4-TRICHLOROBENZENE	UG/L	: 5.0K
P34696	NAPHTHALENE	UG/L	: 5.0K
A00000	4-CHLOROANILINE	UG/L	: 5.0K
P34391	HEXACHLOROBUTADIENE	UG/L	: 5.0K
P34452	4-CHLORO-3-METHYLPHENOL	UG/L	: 5.0K
P77416	2-METHYLNAPHTHALENE	UG/L	: 5.0K
P34386	HEXACHLOROCYCLOPENTADIENE	UG/L	: 5.0K
P34621	2,4,6-TRICHLOROPHENOL	UG/L	: 5.0K
P77687	2,4,5-TRICHLOROPHENOL	UG/L	: 5.0K
P34581	2-CHLORONAPHTHALENE	UG/L	: 5.0K
A00000	2-NITROANILINE	UG/L	: 10K
P34341	DIMETHYLPHTHALATE	UG/L	: 5.0K
P34200	ACENAPHTHYLENE	UG/L	: 5.0K
P34626	2,6-DINITROTOLUENE	UG/L	: 5.0K
P78300	3-NITROANILINE	UG/L	: 10K
P34205	ACENAPHTHENE	UG/L	: 5.0K
P34616	2,4-DINITROPHENOL	UG/L	: 10K
P34646	4-NITROPHENOL	UG/L	: 10K
P81302	DIBENZOFURAN	UG/L	: 5.0K
P34611	2,4-DINITROTOLUENE	UG/L	: 5.0K
P34336	DIETHYLPHTHALATE	UG/L	: 5.0K
P34641	4-CHLOROPHENYL PHENYL ETHER	UG/L	: 5.0K
P34381	FLUORENE	UG/L	: 5.0K
A00000	4-NITROANILINE	UG/L	: 10K
A00000	4,6-DINITRO-2-METHYLPHENOL	UG/L	: 10K
P34636	4-BROMOPHENYL PHENYL ETHER	UG/L	: 5.0K
P39700	HEXACHLOROBENZENE	UG/L	: 5.0K
P39032	PENTACHLOROPHENOL	UG/L	: 10K
P34461	PHENANTHRENE	UG/L	: 5.0K
P34220	ANTHRACENE	UG/L	: 5.0K
P39110	DI-N-BUTYLPHTHLATE	UG/L	: 5.0K
P34376	FLUORANTHENE	UG/L	: 5.0K
P34469	PYRENE	UG/L	: 5.0K
P34292	BUTYL BENZYL PHTHALATE	UG/L	: 5.0K
P34631	3,3'-DICHLOROBENZIDINE	UG/L	: 10K
P34526	BENZO(A)ANTHRACENE	UG/L	: 5.0K
P34320	CHRYSENE	UG/L	: 5.0K

P39100	BIS(2-ETHYLHEXYL)PHTHALATE	UG/L	: 5.0K
P34596	DI-N-OCTYLPHTHALATE	UG/L	: 5.0K
P? 30	BENZO(B)FLUORANTHENE	UG/L	: 5.0K
P? 42	BENZO(K)FLUORANTHENE	UG/L	: 5.0K
P34247	BENZO(A)PYRENE	UG/L	: 5.0K
P34403	INDENO(1,2,3-CD)PYRENE	UG/L	: 5.0K
P34556	DIBENZO(AH)ANTHRACENE	UG/L	: 5.0K
P34521	BENZO(GHI)PERYLENE	UG/L	: 5.0K

GULF COAST LABORATORIES, INC.
2417 Bond St., University Park, Illinois 60466
Phones (312) 534-5200 (219) 885-7077 (815) 723-7533

ANALYTICAL REPORT

TO: Waukegan Water Utility
106 North Utica
Waukegan, IL 60085

ATTN: Mr. Howard Peskator

DATE: April 25, 1988

RE: Storm Sewer Small Craft Dock

Sample Date: 04/21/88
Date Received: 04/21/88
GCL# 128699

VOLATILE COMPOUNDS	RESULT	DETECTION LIMIT		
Benzene	150	25	ug/l	
Chloromethane	BDL	50	ug/l	U
Bromomethane	BDL	50	ug/l	U
Vinyl Chloride	BDL	50	ug/l	U
Chloroethane	BDL	50	ug/l	U
Methylene Chloride	BDL	25	ug/l	U
Acetone	150	50	ug/l	B
Carbon Disulfide	BDL	25	ug/l	U
1,1-Dichloroethene	BDL	25	ug/l	U
1,1-Dichloroethane	BDL	25	ug/l	U
1,2-Dichloroethene (total)	BDL	25	ug/l	U
Chloroform	BDL	25	ug/l	U
1,2-Dichloroethane	BDL	25	ug/l	U
2-Butanone	BDL	50	ug/l	U
1,1,1-Trichloroethane	BDL	25	ug/l	U
Carbon Tetrachloride	BDL	25	ug/l	U
Vinyl Acetate	BDL	50	ug/l	U
Bromodichloromethane	BDL	25	ug/l	U

GULF COAST LABORATORIES, INC.
2417 Bond St., University Park, Illinois 60466
Phones (312) 534-5200 (219) 885-7077 (815) 723-7533

ANALYTICAL REPORT

TO: Waukegan Water Utility
106 North Utica
Waukegan, IL 60085

ATTN: Mr. Howard Peskator

DATE: April 25, 1988

RE: Storm Sewer Small Craft Dock

Sample Date: 04/21/88
Date Received: 04/21/88
GCL# 128699

VOLATILE COMPOUNDS	RESULT	DETECTION LIMIT		
1,2-Dichloropropane	BDL	25	ug/l	U
Cis-1,3-Dichloropropene	BDL	25	ug/l	U
Trichloroethene	BDL	25	ug/l	U
Dibromochloromethane	BDL	25	ug/l	U
1,1,2-Trichloroethane	BDL	25	ug/l	U
Trans-1,3-Dichloropropene	BDL	25	ug/l	U
Bromoform	BDL	25	ug/l	U
4-Methyl-2-Pentanone	BDL	50	ug/l	U
2-Hexanone	BDL	50	ug/l	U
Tetrachloroethene	BDL	25	ug/l	U
1,1,2,2-Tetrachloroethane	BDL	25	ug/l	U
Toluene	250	25	ug/l	
Chlorobenzene	BDL	25	ug/l	U
Ethylbenzene	BDL	25	ug/l	U
Styrene	BDL	25	ug/l	U
Xylene	680	25	ug/l	

GULF COAST LABORATORIES, INC.
2417 Bond St., University Park, Illinois 60466
Phones (312) 534-5200 (219) 885-7077 (815) 723-7533

ANALYTICAL REPORT

TO: Waukegan Water Utility
106 North Utica
Waukegan, IL 60085

ATTN: Mr. Howard Peskator

DATE: April 25, 1988

RE: Storm Sewer Small Craft Dock

Sample Date: 04/21/88
Date Received: 04/21/88
GCL# 128699

TENTATIVELY IDENTIFIED COMPOUNDS

Two (2) Volatile Compounds greater than 10% of the nearest internal standard were tentatively identified by mass spectral library search. This is exclusive of any priority pollutants, surrogates or internal standards.

VOLATILE COMPOUND	RETENTION TIME	ESTIMATED CONCENTRATION
Unknown	12.64	44 ug/l J
Unknown	14.71	77 ug/l J

GULF COAST LABORATORIES, INC.
2417 Bond St., University Park, Illinois 60466
Phones (312) 534-5200 (219) 885-7077 (815) 723-7533

ANALYTICAL REPORT

TO: Waukegan Water Utility
106 North Utica
Waukegan, IL 60085

ATTN: Mr. Howard Peskator

DATE: April 25, 1988

RE: Mouth of Harbor

Sample Date: 04/21/88
Date Received: 04/21/88
GCL# 128700

VOLATILE COMPOUNDS	RESULT	DETECTION LIMIT		
Benzene	4	5	ug/l	J
Chloromethane	BDL	10	ug/l	U
Bromomethane	BDL	10	ug/l	U
Vinyl Chloride	BDL	10	ug/l	U
Chloroethane	BDL	10	ug/l	U
Methylene Chloride	6	5	ug/l	
Acetone	BDL	10	ug/l	U
Carbon Disulfide	BDL	5	ug/l	U
1,1-Dichloroethene	BDL	5	ug/l	U
1,1-Dichloroethane	BDL	5	ug/l	U
1,2-Dichloroethene (total)	BDL	5	ug/l	U
Chloroform	BDL	5	ug/l	U
1,2-Dichloroethane	BDL	5	ug/l	U
2-Butanone	BDL	10	ug/l	U
1,1,1-Trichloroethane	BDL	5	ug/l	U
Carbon Tetrachloride	BDL	5	ug/l	U
Vinyl Acetate	BDL	10	ug/l	U
Bromodichloromethane	BDL	5	ug/l	U

GULF COAST LABORATORIES, INC.
2417 Bond St., University Park, Illinois 60466
Phones (312) 534-5200 (219) 885-7077 (815) 723-7533

ANALYTICAL REPORT

TO: Waukegan Water Utility
106 North Utica
Waukegan, IL 60085

ATTN: Mr. Howard Peskator

DATE: April 25, 1988

RE: Mouth of Harbor

Sample Date: 04/21/88
Date Received: 04/21/88
GCL# 128700

VOLATILE COMPOUNDS	RESULT	DETECTION LIMIT		
1,2-Dichloropropane	BDL	5	ug/l	U
Cis-1,3-Dichloropropene	BDL	5	ug/l	U
Trichloroethene	BDL	5	ug/l	U
Dibromochloromethane	BDL	5	ug/l	U
1,1,2-Trichloroethane	BDL	5	ug/l	U
Trans-1,3-Dichloropropene	BDL	5	ug/l	U
Bromoform	BDL	5	ug/l	U
4-Methyl-2-Pentanone	BDL	10	ug/l	U
2-Hexanone	BDL	10	ug/l	U
Tetrachloroethene	BDL	5	ug/l	U
1,1,2,2-Tetrachloroethane	BDL	5	ug/l	U
Toluene	BDL	5	ug/l	U
Chlorobenzene	BDL	5	ug/l	U
Ethylbenzene	BDL	5	ug/l	U
Styrene	BDL	5	ug/l	U
Xylene	13	5	ug/l	

GULF COAST LABORATORIES, INC.
2417 Bond St., University Park, Illinois 60466
Phones (312) 534-5200 (219) 885-7077 (815) 723-753.

ANALYTICAL REPORT

TO: Waukegan Water Utility
106 North Utica
Waukegan, IL 60085

ATTN: Mr. Howard Peskator

DATE: April 25, 1988

RE: Mouth of Harbor

Sample Date: 04/21/88
Date Received: 04/21/88
GCL# 128700

TENTATIVELY IDENTIFIED COMPOUNDS

No Volatile Compounds greater than 10% of the nearest internal standard were tentatively identified by mass spectral library search. This is exclusive of any priority pollutants, surrogates or internal standards.

GULF COAST LABORATORIES, INC.
2417 Bond St., University Park, Illinois 60466
Phones (312) 534-5200 (219) 885-7077 (815) 723-7533

ANALYTICAL REPORT

TO: Waukegan Water Utility
106 North Utica
Waukegan, IL 60085

ATTN: Mr. Howard Peskator

DATE: April 25, 1988

RE: 30" Drain & 30"
Emergency Intake
Sample Date: 04/21/88
Date Received: 04/21/88
GCL# 128701

VOLATILE COMPOUNDS	RESULT	DETECTION LIMIT		
Benzene	110	25	ug/l	
Chloromethane	BDL	50	ug/l	U
Bromomethane	BDL	50	ug/l	U
Vinyl Chloride	BDL	50	ug/l	U
Chloroethane	BDL	50	ug/l	U
Methylene Chloride	BDL	25	ug/l	U
Acetone	27	50	ug/l	J B
Carbon Disulfide	BDL	25	ug/l	U
1,1-Dichloroethene	BDL	25	ug/l	U
1,1-Dichloroethane	BDL	25	ug/l	U
1,2-Dichloroethene (total)	BDL	25	ug/l	U
Chloroform	BDL	25	ug/l	U
1,2-Dichloroethane	BDL	25	ug/l	U
2-Butanone	BDL	50	ug/l	U
1,1,1-Trichloroethane	BDL	25	ug/l	U
Carbon Tetrachloride	BDL	25	ug/l	U
Vinyl Acetate	BDL	50	ug/l	U
Bromodichloromethane	BDL	25	ug/l	U

GULF COAST LABORATORIES, INC.
2417 Bond St., University Park, Illinois 60466
Phones (312) 534-5200 (219) 885-7077 (815) 723-7533

ANALYTICAL REPORT

TO: Waukegan Water Utility
106 North Utica
Waukegan, IL 60085

ATTN: Mr. Howard Peskator

DATE: April 25, 1988

RE: 30" Drain & 30"
Emergency Intake
Sample Date: 04/21/88
Date Received: 04/21/88
GCL# 128701

VOLATILE COMPOUNDS	RESULT	DETECTION LIMIT		
1,2-Dichloropropane	BDL	25	ug/l	U
Cis-1,3-Dichloropropene	BDL	25	ug/l	U
Trichloroethene	BDL	25	ug/l	U
Dibromochloromethane	BDL	25	ug/l	U
1,1,2-Trichloroethane	BDL	25	ug/l	U
Trans-1,3-Dichloropropene	BDL	25	ug/l	U
Bromoform	BDL	25	ug/l	U
4-Methyl-2-Pentanone	BDL	50	ug/l	U
2-Hexanone	BDL	50	ug/l	U
Tetrachloroethene	BDL	25	ug/l	U
1,1,2,2-Tetrachloroethane	BDL	25	ug/l	U
Toluene	200	25	ug/l	
Chlorobenzene	BDL	25	ug/l	U
Ethylbenzene	BDL	25	ug/l	U
Styrene	BDL	25	ug/l	U
Xylene	460	25	ug/l	

GULF COAST LABORATORIES, INC.
2417 Bond St., University Park, Illinois 60466
Phones (312) 534-5200 (219) 885-7077 (815) 723-7533

ANALYTICAL REPORT

TO: Waukegan Water Utility
106 North Utica
Waukegan, IL 60085

ATTN: Mr. Howard Peskator

DATE: April 25, 1988

RE: 30" Drain & 30"
Emergency Intake
Sample Date: 04/21/88
Date Received: 04/21/88
GCL# 128701

TENTATIVELY IDENTIFIED COMPOUNDS

Two (2) Volatile Compounds greater than 10% of the nearest internal standard were tentatively identified by mass spectral library search. This is exclusive of any priority pollutants, surrogates or internal standards.

VOLATILE COMPOUND	RETENTION TIME	ESTIMATED CONCENTRATION
Unknown	12.58	32 ug/l J
Unknown	14.69	58 ug/l J

GULF COAST LABORATORIES, INC.
2417 Bond St., University Park, Illinois 60466
Phones (312) 534-5200 (219) 885-7077 (815) 723-7533

ANALYTICAL REPORT

TO: Waukegan Water Utility
106 North Utica
Waukegan, IL 60085

ATTN: Mr. Howard Peskator

DATE: April 25, 1988

RE: 48" Intake

Sample Date: 04/21/88
Date Received: 04/21/88
GCL# 128702

VOLATILE COMPOUNDS	RESULT	DETECTION LIMIT		
Benzene	BDL	5	ug/l	U
Chloromethane	BDL	10	ug/l	U
Bromomethane	BDL	10	ug/l	U
Vinyl Chloride	BDL	10	ug/l	U
Chloroethane	BDL	10	ug/l	U
Methylene Chloride	BDL	5	ug/l	U
Acetone	4	10	ug/l	J B
Carbon Disulfide	BDL	5	ug/l	U
1,1-Dichloroethene	BDL	5	ug/l	U
1,1-Dichloroethane	BDL	5	ug/l	U
1,2-Dichloroethene (total)	BDL	5	ug/l	U
Chloroform	BDL	5	ug/l	U
1,2-Dichloroethane	BDL	5	ug/l	U
2-Butanone	BDL	10	ug/l	U
1,1,1-Trichloroethane	BDL	5	ug/l	U
Carbon Tetrachloride	BDL	5	ug/l	U
Vinyl Acetate	BDL	10	ug/l	U
Bromodichloromethane	BDL	5	ug/l	U

GULF COAST LABORATORIES, INC.
2417 Bond St., University Park, Illinois 60466
Phones (312) 534-5200 (219) 885-7077 (815) 723-7533

ANALYTICAL REPORT

TO: Waukegan Water Utility
106 North Utica
Waukegan, IL 60085

ATTN: Mr. Howard Peskator

DATE: April 25, 1988

RE: 48" Intake

Sample Date: 04/21/88
Date Received: 04/21/88
GCL# 128702

VOLATILE COMPOUNDS	RESULT	DETECTION LIMIT		
1,2-Dichloropropane	BDL	5	ug/l	U
Cis-1,3-Dichloropropene	BDL	5	ug/l	U
Trichloroethene	BDL	5	ug/l	U
Dibromochloromethane	BDL	5	ug/l	U
1,1,2-Trichloroethane	BDL	5	ug/l	U
Trans-1,3-Dichloropropene	BDL	5	ug/l	U
Bromoform	BDL	5	ug/l	U
4-Methyl-2-Pentanone	BDL	10	ug/l	U
2-Hexanone	BDL	10	ug/l	U
Tetrachloroethene	BDL	5	ug/l	U
1,1,2,2-Tetrachloroethane	BDL	5	ug/l	U
Toluene	BDL	5	ug/l	U
Chlorobenzene	BDL	5	ug/l	U
Ethylbenzene	BDL	5	ug/l	U
Styrene	BDL	5	ug/l	U
Xylene	BDL	5	ug/l	U

GULF COAST LABORATORIES, INC.
2417 Bond St., University Park, Illinois 60466
Phones (312) 534-5200 (219) 885-7077 (815) 723-7533

ANALYTICAL REPORT

TO: Waukegan Water Utility
106 North Utica
Waukegan, IL 60085

ATTN: Mr. Howard Peskator

DATE: April 25, 1988

RE: 48" Intake

Sample Date: 04/21/88
Date Received: 04/21/88
GCL# 128702

TENTATIVELY IDENTIFIED COMPOUNDS

No Volatile Compounds greater than 10% of the nearest internal standard were tentatively identified by mass spectral library search. This is exclusive of any priority pollutants, surrogates or internal standards.

GULF COAST LABORATORIES, INC.
2417 Bond St., University Park, Illinois 60466
Phones (312) 534-5200 (219) 885-7077 (815) 723-7533

ANALYTICAL REPORT

TO: Waukegan Water Utility
106 North Utica
Waukegan, IL 60085

ATTN: Mr. Howard Peskator

DATE: April 25, 1988

RE: Area of Paint Factory

Sample Date: 04/21/88
Date Received: 04/21/88
GCL# 128703

VOLATILE COMPOUNDS	RESULT	DETECTION LIMIT		
Benzene	BDL	5	ug/l	U
Chloromethane	BDL	10	ug/l	U
Bromomethane	BDL	10	ug/l	U
Vinyl Chloride	BDL	10	ug/l	U
Chloroethane	BDL	10	ug/l	U
Methylene Chloride	BDL	5	ug/l	U
Acetone	BDL	10	ug/l	U
Carbon Disulfide	BDL	5	ug/l	U
1,1-Dichloroethene	BDL	5	ug/l	U
1,1-Dichloroethane	BDL	5	ug/l	U
1,2-Dichloroethene (total)	BDL	5	ug/l	U
Chloroform	BDL	5	ug/l	U
1,2-Dichloroethane	BDL	5	ug/l	U
2-Butanone	BDL	10	ug/l	U
1,1,1-Trichloroethane	BDL	5	ug/l	U
Carbon Tetrachloride	BDL	5	ug/l	U
Vinyl Acetate	BDL	10	ug/l	U
Bromodichloromethane	BDL	5	ug/l	U

GULF COAST LABORATORIES, INC.
2417 Bond St., University Park, Illinois 60466
Phones (312) 534-5200 (219) 885-7077 (815) 723-7533

ANALYTICAL REPORT

TO: Waukegan Water Utility
106 North Utica
Waukegan, IL 60085

ATTN: Mr. Howard Peskator

DATE: April 25, 1988

RE: Area of Paint Factory

Sample Date: 04/21/88
Date Received: 04/21/88
GCL# 128703

VOLATILE COMPOUNDS	RESULT	DETECTION LIMIT		
1,2-Dichloropropane	BDL	5	ug/l	U
Cis-1,3-Dichloropropene	BDL	5	ug/l	U
Trichloroethene	BDL	5	ug/l	U
Dibromochloromethane	BDL	5	ug/l	U
1,1,2-Trichloroethane	BDL	5	ug/l	U
Trans-1,3-Dichloropropene	BDL	5	ug/l	U
Bromoform	BDL	5	ug/l	U
4-Methyl-2-Pentanone	BDL	10	ug/l	U
2-Hexanone	BDL	10	ug/l	U
Tetrachloroethene	BDL	5	ug/l	U
1,1,2,2-Tetrachloroethane	BDL	5	ug/l	U
Toluene	BDL	5	ug/l	U
Chlorobenzene	BDL	5	ug/l	U
Ethylbenzene	BDL	5	ug/l	U
Styrene	BDL	5	ug/l	U
Xylene	BDL	5	ug/l	U

GULF COAST LABORATORIES, INC.
2417 Bond St., University Park, Illinois 60466
Phones (312) 534-5200 (219) 885-7077 (815) 723-7533

ANALYTICAL REPORT

TO: Waukegan Water Utility
106 North Utica
Waukegan, IL 60085

ATTN: Mr. Howard Peskator

DATE: April 25, 1988

RE: Area of Paint Factory

Sample Date: 04/21/88
Date Received: 04/21/88
GCL# 128703

TENTATIVELY IDENTIFIED COMPOUNDS

No Volatile Compounds greater than 10% of the nearest internal standard were tentatively identified by mass spectral library search. This is exclusive of any priority pollutants, surrogates or internal standards.

GULF COAST LABORATORIES, INC.
2417 Bond St., University Park, Illinois 60466
Phones (312) 534-5200 (219) 885-7077 (815) 723-7533

ANALYTICAL REPORT

TO: Waukegan Water Utility
106 North Utica
Waukegan, IL 60085

ATTN: Mr. Howard Peskator

DATE: April 25, 1988

RE: 200 Feet East of North Ditch

Sample Date: 04/21/88
Date Received: 04/21/88
GCL# 128704

VOLATILE COMPOUNDS	RESULT	DETECTION LIMIT		
Benzene	11	5	ug/l	
Chloromethane	BDL	10	ug/l	U
Bromomethane	BDL	10	ug/l	U
Vinyl Chloride	65	10	ug/l	
Chloroethane	BDL	10	ug/l	U
Methylene Chloride	BDL	5	ug/l	U
Acetone	11	10	ug/l	B
Carbon Disulfide	BDL	5	ug/l	U
1,1-Dichloroethene	BDL	5	ug/l	U
1,1-Dichloroethane	8	5	ug/l	
1,2-Dichloroethene (total)	140	5	ug/l	
Chloroform	BDL	5	ug/l	U
1,2-Dichloroethane	BDL	5	ug/l	U
2-Butanone	BDL	10	ug/l	U
1,1,1-Trichloroethane	4	5	ug/l	J
Carbon Tetrachloride	BDL	5	ug/l	U
Vinyl Acetate	BDL	10	ug/l	U
Bromodichloromethane	BDL	5	ug/l	U

GULF COAST LABORATORIES, INC.
2417 Bond St., University Park, Illinois 60466
Phones (312) 534-5200 (219) 885-7077 (815) 723-7533

ANALYTICAL REPORT

TO: Waukegan Water Utility
106 North Utica
Waukegan, IL 60085

ATTN: Mr. Howard Peskator

DATE: April 25, 1988

RE: 200 Feet East of North Ditch

Sample Date: 04/21/88
Date Received: 04/21/88
GCL# 128704

VOLATILE COMPOUNDS	RESULT	DETECTION LIMIT		
1,2-Dichloropropane	BDL	5	ug/l	U
Cis-1,3-Dichloropropene	BDL	5	ug/l	U
Trichloroethene	3	5	ug/l	J
Dibromochloromethane	BDL	5	ug/l	U
1,1,2-Trichloroethane	BDL	5	ug/l	U
Trans-1,3-Dichloropropene	BDL	5	ug/l	U
Bromoform	BDL	5	ug/l	U
4-Methyl-2-Pentanone	BDL	10	ug/l	U
2-Hexanone	BDL	10	ug/l	U
Tetrachloroethene	BDL	5	ug/l	U
1,1,2,2-Tetrachloroethane	BDL	5	ug/l	U
Toluene	5	5	ug/l	
Chlorobenzene	BDL	5	ug/l	U
Ethylbenzene	BDL	5	ug/l	U
Styrene	BDL	5	ug/l	U
Xylene	60	5	ug/l	

GULF COAST LABORATORIES, INC.
2417 Bond St., University Park, Illinois 60466
Phones (312) 534-5200 (219) 885-7077 (815) 723-7533

ANALYTICAL REPORT

TO: Waukegan Water Utility
106 North Utica
Waukegan, IL 60085

ATTN: Mr. Howard Peskator

DATE: April 25, 1988

RE: 200 Feet East of North Ditch

Sample Date: 04/21/88
Date Received: 04/21/88
GCL# 128704

TENTATIVELY IDENTIFIED COMPOUNDS

No Volatile Compounds greater than 10% of the nearest internal standard were tentatively identified by mass spectral library search. This is exclusive of any priority pollutants, surrogates or internal standards.

GULF COAST LABORATORIES, INC.
2417 Bond St., University Park, Illinois 60466
Phones (312) 534-5200 (219) 885-7077 (815) 723-7533

ANALYTICAL REPORT

TO: Waukegan Water Utility
106 North Utica
Waukegan, IL 60085

ATTN: Mr. Howard Peskator

DATE: April 25, 1988

RE: Johnson Testing Cell

Sample Date: 04/21/88
Date Received: 04/21/88
GCL# 128705

VOLATILE COMPOUNDS	RESULT	DETECTION LIMIT		
Benzene	220	25	ug/l	
Chloromethane	BDL	50	ug/l	U
Bromomethane	BDL	50	ug/l	U
Vinyl Chloride	BDL	50	ug/l	U
Chloroethane	BDL	50	ug/l	U
Methylene Chloride	BDL	25	ug/l	U
Acetone	27	50	ug/l	J B
Carbon Disulfide	BDL	25	ug/l	U
1,1-Dichloroethene	BDL	25	ug/l	U
1,1-Dichloroethane	BDL	25	ug/l	U
1,2-Dichloroethene (total)	BDL	25	ug/l	U
Chloroform	BDL	25	ug/l	U
1,2-Dichloroethane	BDL	25	ug/l	U
2-Butanone	BDL	50	ug/l	U
1,1,1-Trichloroethane	BDL	25	ug/l	U
Carbon Tetrachloride	BDL	25	ug/l	U
Vinyl Acetate	BDL	50	ug/l	U
Bromodichloromethane	BDL	25	ug/l	U

GULF COAST LABORATORIES, INC.
2417 Bond St., University Park, Illinois 60466
Phones (312) 534-5200 (219) 885-7077 (815) 723-7533

ANALYTICAL REPORT

TO: Waukegan Water Utility
106 North Utica
Waukegan, IL 60085

ATTN: Mr. Howard Peskator

DATE: April 25, 1988

RE: Johnson Testing Cell

Sample Date: 04/21/88
Date Received: 04/21/88
GCL# 128705

VOLATILE COMPOUNDS	RESULT	DETECTION LIMIT		
1,2-Dichloropropane	BDL	25	ug/l	U
Cis-1,3-Dichloropropene	BDL	25	ug/l	U
Trichloroethene	BDL	25	ug/l	U
Dibromochloromethane	BDL	25	ug/l	U
1,1,2-Trichloroethane	BDL	25	ug/l	U
Trans-1,3-Dichloropropene	BDL	25	ug/l	U
Bromoform	BDL	25	ug/l	U
4-Methyl-2-Pentanone	BDL	50	ug/l	U
2-Hexanone	BDL	50	ug/l	U
Tetrachloroethene	BDL	25	ug/l	U
1,1,2,2-Tetrachloroethane	BDL	25	ug/l	U
Toluene	470	25	ug/l	
Chlorobenzene	BDL	25	ug/l	U
Ethylbenzene	BDL	25	ug/l	U
Styrene	BDL	25	ug/l	U
Xylene	910	25	ug/l	

GULF COAST LABORATORIES, INC.
2417 Bond St., University Park, Illinois 60466
Phones (312) 534-5200 (219) 885-7077 (815) 723-7533

ANALYTICAL REPORT

TO: Waukegan Water Utility
106 North Utica
Waukegan, IL 60085

ATTN: Mr. Howard Peskator

DATE: April 25, 1988

RE: Johnson Testing Cell

Sample Date: 04/21/88
Date Received: 04/21/88
GCL# 128705

TENTATIVELY IDENTIFIED COMPOUNDS

Eight (8) Volatile Compounds greater than 10% of the nearest internal standard were tentatively identified by mass spectral library search. This is exclusive of any priority pollutants, surrogates or internal standards.

VOLATILE COMPOUND	RETENTION TIME	ESTIMATED CONCENTRATION
Unknown	8.29	37 ug/l J
Unknown	11.57	28 ug/l J
Unknown	11.88	30 ug/l J
Butane, 2-Methyl	12.58	58 ug/l J
Unknown	13.87	28 ug/l J
Unknown	14.69	98 ug/l J
Unknown	15.78	24 ug/l J
Unknown	17.77	32 ug/l J

Risatti, Ross, and Burnett, 1990
Assessment of Ecotoxicological Hazard
of Waukegan Harbor Sediments
(Sediment Quality)

AMENDMENT:
Assessment of Ecotoxicological Hazard of Waukegan Harbor Sediments

by

J. Bruno Risatti
Illinois State Geological Survey, 615 E. Peabody Drive, Champaign, IL 61820

Philippe Ross and LouAnn C. Burnett
Illinois Natural History Survey, 607 E. Peabody Drive, Champaign, IL 61820

prepared for

the Illinois Hazardous Waste Reseach and Information Center

HWRIC Project No. **87-040**

Printed October 1990
Printed by authority of the State of Illinois 90/200

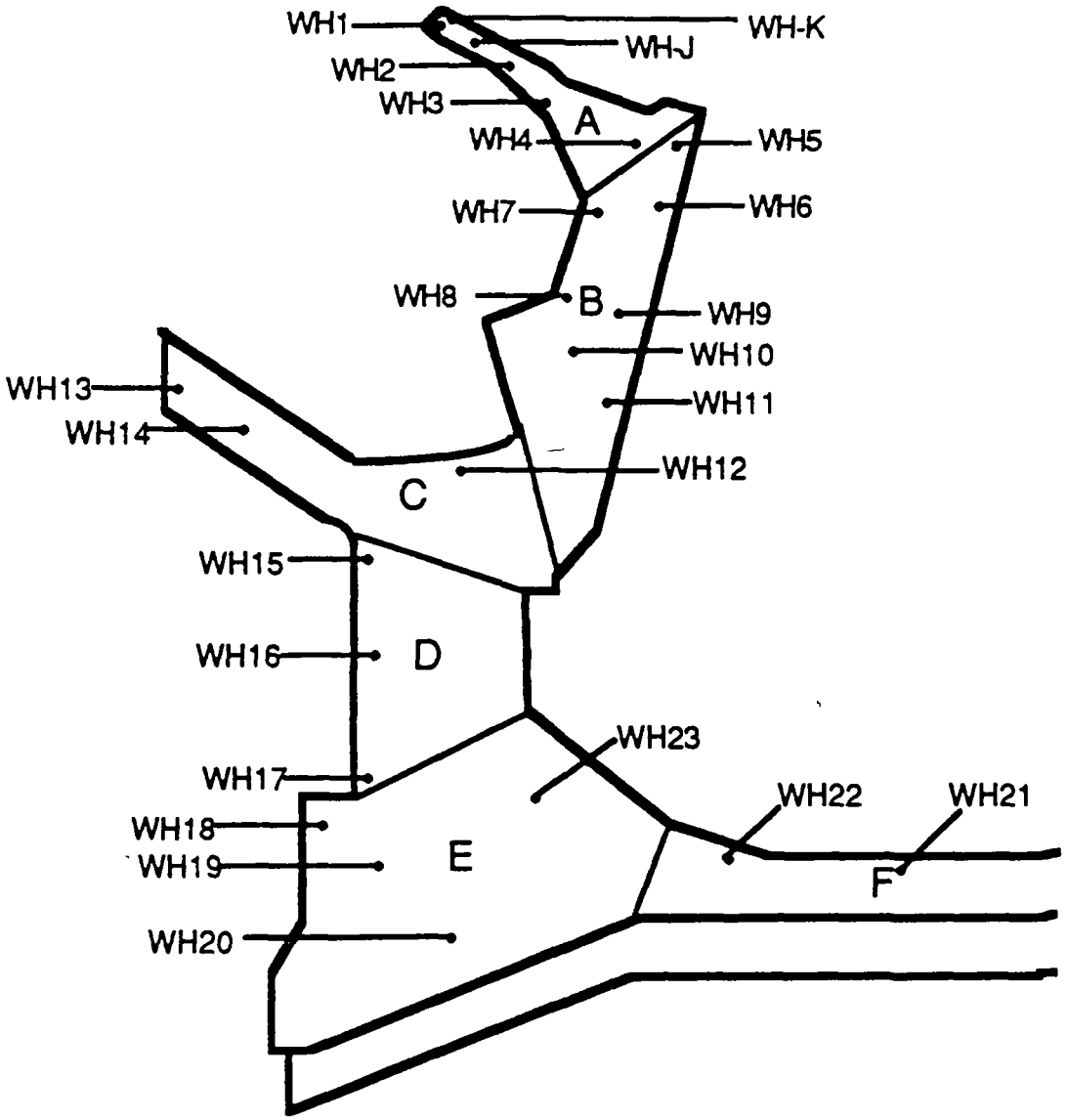

Figure 2. Location of Stations Sampled in Waukegan Harbor.

Chapter 3. RESULTS AND DISCUSSION

CHEMISTRY

Oil and Grease. Percentages of oil and grease were determined from all stations sampled in the harbor (Table 3). Concentrations ranged from 0.3% to 5.19%, with the highest values occurring in Slip 3 and in the areas immediately outside the slip. There are a number of small boat moorings associated with the marina at this location. Consequently, these areas are subjected to heavy boating activity which, at this time at least, is probably the major source of oil and grease. Prior to 1975, there may also have been an input of machine fluids from the adjacent Outboard Marine Company plant. Small boats as well as commercial freighters and industrial activity may account for the above average levels in the vicinity of Slip 1. ENCOTEC (1976) reported concentrations of oil and grease from eight harbor stations that are generally lower (range of 0.18 percent to 3.9 percent) than the values we found. Their two highest concentrations (0.97 percent and 3.9 percent) were from Slip 1 stations.

Not surprisingly, the concentration pattern of oil and grease in the harbor is similar to that observed by Risatti (1989) and Ross *et al.* (1988) for PCB concentrations. These authors suggested that there was movement of PCBs out of Slip 3 into the lower harbor and that currents seemed to be concentrating PCB-bearing sediments on the west side of the harbor.

Table 3. Total Oils and Grease Levels in Waukegan Harbor Samples Collected on April 27, 1987. Stations WH1, WH21 and WH23 are Averages of Duplicate Values.

Sample	% Oil & Grease	Sample	% Oil & Grease	Sample	% Oil & Grease
WH-1	3.5	WH-9	0.9	WH-17	1.2
WH-2	3.7	WH-10	2.9	WH-18	1.5
WH-3	4.3	WH-11	0.5	WH-19	0.5
WH-4	3.0	WH-12	0.3	WH-20	0.5
WH-5	3.7	WH-13	0.8	WH-21	0.9
WH-6	0.9	WH-14	1.2	WH-22	0.4
WH-7	5.1	WH-15	2.7	WH-23	0.6
WH-8	3.2	WH-16	1.2		

Metals Analyses. The concentrations of 22 major, minor and trace metals from 23 stations are listed in Table 4. Although only a few of the metals listed are toxic to some degree, the concentrations of all the metals analyzed were included to serve as a reference for future work on the harbor sediments.

Table 4. Elemental Analysis of Waukegan Harbor Sediments Collected on 27 April 1987 (in ppm unless otherwise noted).

Station	Elements										
	Al (%)	Ba	Be	Ca (%)	Cd	Co	Cr	Cu	Fe (%)	K (%)	La
WH-1	1.88	230	1.6	7.1	<1.3	10.0	9	120	4.0	1.0	27
WH-2	2.11	260	1.8	6.4	<1.3	4.8	2	86	2.2	1.1	20
WH-3	2.46	280	1.7	7.1	<1.3	4.8	3	178	1.8	1.2	21
WH-4	2.34	280	1.6	6.3	<1.3	3.1	1	57	1.3	1.2	20
WH-5	3.70	290	1.8	5.6	3.8	9.0	7	210	2.5	1.7	30
WH-6	3.54	290	1.8	5.5	4.0	6.2	6	230	2.4	1.7	28
WH-7	3.99	290	1.8	5.4	4.9	9.8	9	150	2.7	1.9	32
WH-8	3.87	290	1.7	5.7	4.9	9.4	8	120	2.4	1.7	31
WH--9	3.93	280	1.9	5.7	5.5	10.0	8	120	2.3	1.8	32
WH--10	3.59	290	1.8	6.1	4.0	7.1	6	100	2.1	1.7	30
WH--11	3.64	290	1.8	6.0	6.5	7.5	7	96	2.1	1.7	30
WH--12	3.04	280	1.8	6.6	23.0	7.5	1	76	1.9	1.4	27
WH--13	3.67	280	2.2	6.7	50.0	10.0	2	120	2.4	1.7	32
WH--14	3.56	290	1.8	6.9	38.0	9.2	2	100	2.2	1.6	31
WH--15	3.77	280	1.8	6.5	4.4	8.4	7	78	2.5	1.6	32
WH--16	3.92	280	1.8	6.4	2.1	7.6	6	86	2.1	1.8	33
WH--17	3.39	280	1.8	6.3	14.0	0.0	1	93	2.1	0.8	31
WH--18	2.67	290	1.8	6.9	<1.3	0.0	9	48	1.6	0.7	24
WH--19	3.69	280	1.8	6.7	2.2	0.0	1	86	2.1	1.0	32
WH--20	3.38	320	1.8	7.2	1.7	0.0	1	72	1.8	0.9	29
WH--21	2.68	270	1.7	8.7	<1.3	0.0	9	40	1.5	0.8	28
WH--22	2.85	280	1.8	8.2	<1.3	0.0	9	45	1.5	0.8	28
WH--23	3.30	300	1.8	8.0	5.7	0.0	1	89	2.0	0.9	31

(continued)

Table 4 (cont.). Elemental Analysis of Waukegan Harbor Sediments Collected on 27 April 1987 (in ppm unless noted otherwise).

Station	Elements										
	Mg (%)	[illegible]	Mo	Na (ppt)	Ni	Pb	Si (%)	Sr	V	Zn	Ti
WH--1	4	840	24	5800	8	54	49	110	180	210	5400
WH--2	3	530	28	3300	6	36	53	120	83	130	2600
WH--3	4	460	18	3100	8	150	46	110	45	300	2100
WH--4	3	440	22	3600	11	99	57	120	42	81	1750
WH--5	3	460	18	3100	26	260	39	100	90	270	2200
WH--6	3	460	20	3400	24	240	42	100	85	260	2000
WH--7	4	470	17	1000	19	330	40	100	83	330	2200
WH--8	4	500	19	7300	25	290	40	110	82	280	2200
WH--9	4	490	15	1200	23	280	40	110	43	270	2100
WH-10	4	480	19	1600	16	210	40	100	83	210	2200
WH--11	4	510	18	1500	24	270	40	110	41	210	2000
WH--12	4	540	25	2200	24	280	44	120	83	200	2000
WH--13	4	580	20	1200	32	420	38	110	84	370	2100
WH--14	4	560	26	2500	27	370	40	120	73	290	2100
WH--15	4	610	18	2500	19	190	40	120	84	200	2100
WH--16	4	590	13	2100	13	200	38	110	73	200	2100
WH--17	4	480	22	2900	13	280	43	110	77	240	2100
WH--18	4	440	31	3700	8	140	48	110	63	110	1700
WH--19	4	550	17	3000	19	130	42	100	94	200	2100
WH--20	4	540	30	3000	16	100	42	130	52	160	1800
WH--21	5	570	32	3300	19	60	41	110	58	90	1600
WH--22	5	540	36	2900	13	110	41	110	52	98	1800
WH--23	5	580	24	2500	16	150	39	110	74	220	1900

In Table 5, the average Waukegan Harbor concentrations for eight metals of geochemical or environmental interest are compared to values found in sediments from Lake Calumet, Calumet Harbor, Little Calumet River, Lake Michigan, Cal-Sag Channel and Wolf Lake. Except for the Cal-Sag Channel, Waukegan Harbor has the highest concentrations of cadmium, copper, and lead. Waukegan Harbor sediments on the average are about 3.5 times lower in chromium than sediments from surrounding areas and are also relatively low in zinc.

Table 5. Average Concentrations (N=23) of Selected Metals (in ppm unless otherwise noted) in Sediments of Waukegan Harbor and in Sediments of Nearby Water Systems.

Elements	Waukegan Harbor	Lake[e] Calumet	Calumet[a] Harbor	Little[b] Cal. River	Lake[c] Michigan	Cal-Sag[b] Channel	Wolf[d] Lake
Cadmium	8.0	1.8	3.2	2.5	0.9	-.-	2.0
Chromium	5.0	76.7	46.0	66.0	46.0	105.0	18.0
Copper	104.0	57.5	44.0	88.0	22.0	125.0	27.0
Iron (%)	2.2	2.7	-.-	2.9	2.2	3.4	1.5
Lead	202.0	187.0	144.0	190.0	40.0	370.0	110.0
Nickel	17.0	23.6	-.-	-.-	24.0	-.-	-.-
Sodium	2900.0	470.0	-.-	-.-	458.0	-.-	-.-
Zinc	214.0	341.0	208.0	375.0	97.0	1100.0	255.0

a = USACE (1985)
b = IEPA (1984)
c = Cahill and Shimp (1984)
d = Kelly and Hite (1981)
e = Risatti and Sheridan (1988)

The concentrations and relative distributions of aluminum, cadmium, cobalt, copper, lead and zinc at the various stations, are illustrated by the histograms in Figures 6 and 7. Especially interesting are stations 1-7, which are located in Slip 3 and immediate vicinity, and stations 12-15 which are located in and just outside of Slip 1 (station 12). The most unusual distribution is that of cadmium where values at stations 12, 13, and 14 are, on the average,10 times greater than values elsewhere in the harbor. Lead and zinc are also higher in Slip 1, which suggests that the cadmium values may be related to paint manufacture or disposal. The occurrences of lead and zinc are related and a regression analyses of lead versus zinc gives a correlation of R = 0.79. Copper is slightly more elevated in the area of Slip 3, possibly because of copper containing marine paints used as biocides on boat hulls.

Average concentrations of nine metals in Waukegan Harbor sediments were also compared with sediments from other commercial areas in the Great Lakes and to a pollution classification index for Great Lakes Harbor sediments (Table 6). Harbor sediments are heavily polluted with respect to cadmium (4 stations), copper (20 stations), manganese (14 stations), lead (21 stations), and zinc (13 stations) and moderately polluted with respect to iron (17 stations).

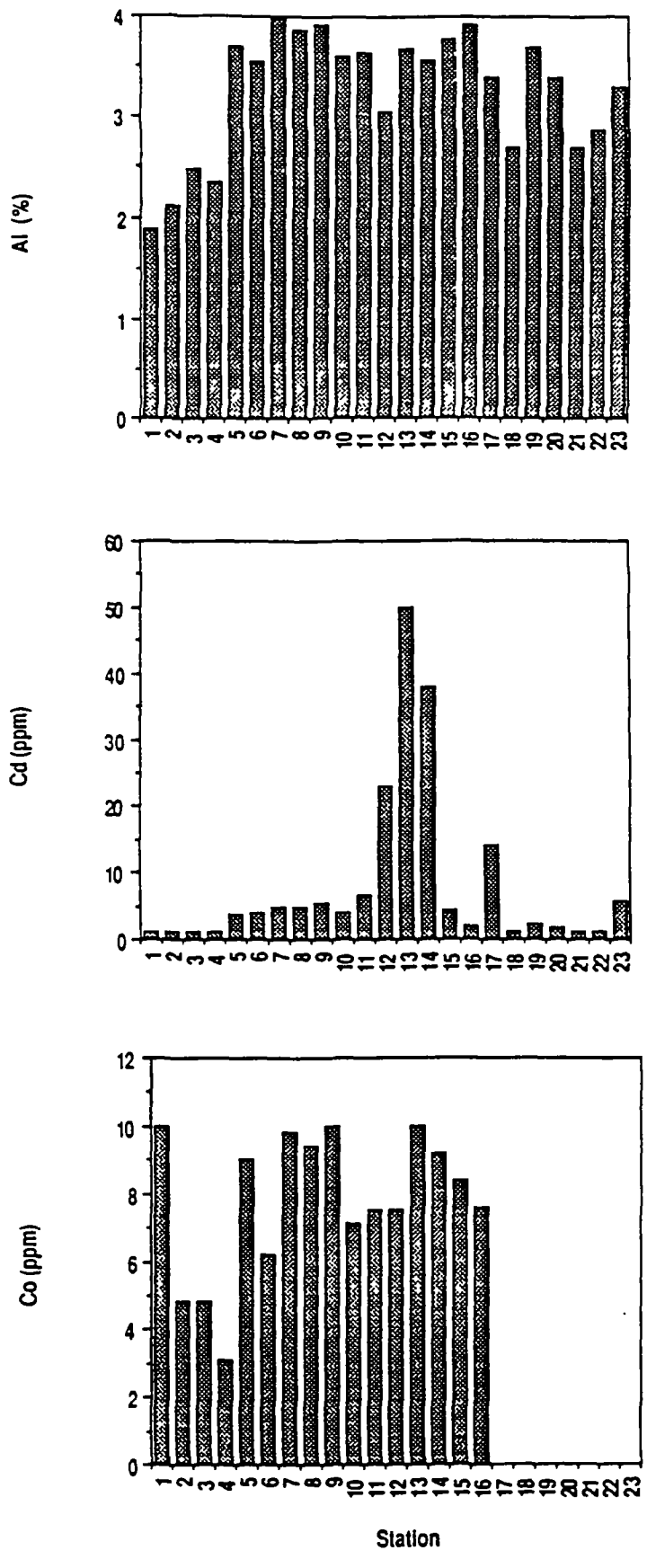

Figure 4. Concentrations of Aluminum, Cadmium, and Cobalt in 23 Sediment Samples from Waukegan Harbor.

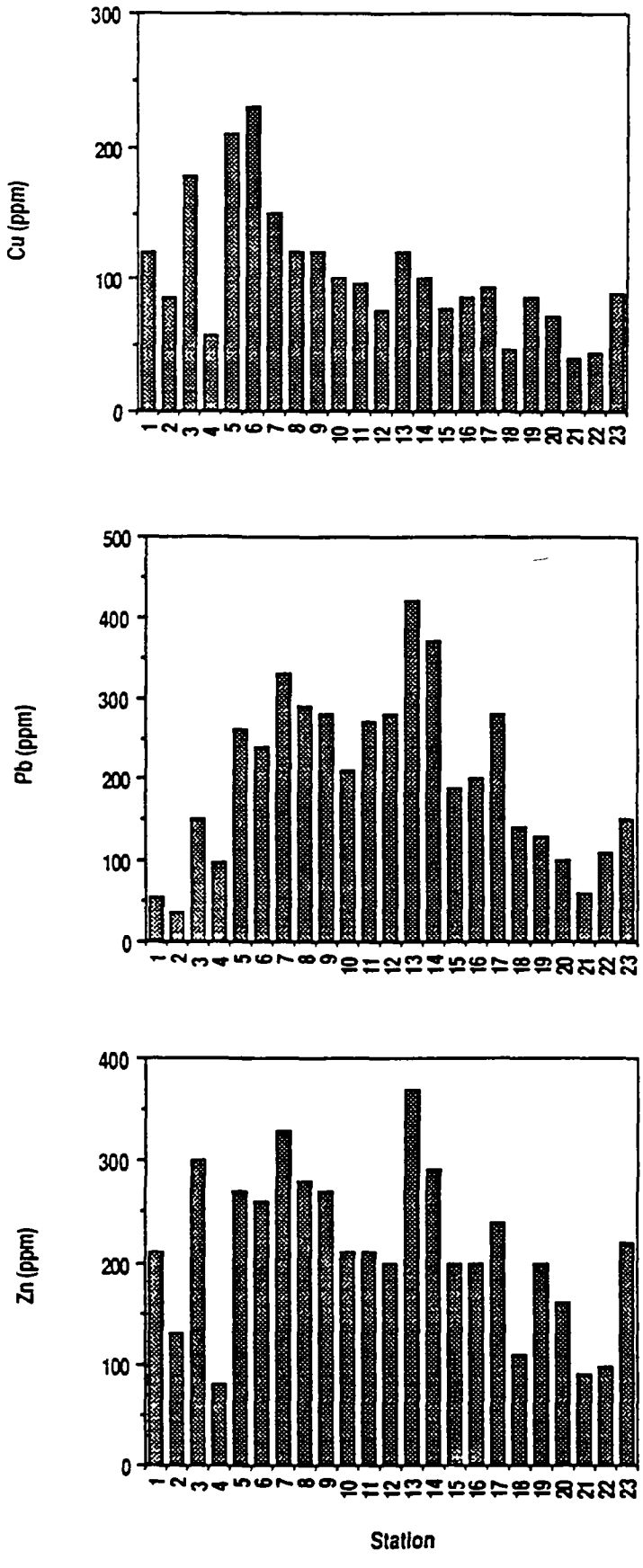

Figure 5. Concentrations of Copper, Lead, and Zinc in 23 Sediment Samples from Waukegan Harbor.

Table 6. Comparison of Average Concentrations of Selected Metals in Sediments of Waukegan Harbor with Sediments of Several Similar Localities in the Great Lakes.

Element	Waukegan Harbor	Toronto Harbor	Hamilton Harbor	Lake St. Clair	Heavily * Polluted
Cd	8.0	8.0	19.0	--	>6.0
Co	5.0	34.0	36.0	-	--.--
Cr	5.0	137.0	539.0	--	>75.0
Cu	104.0	94.0	216.0	16.0	>50.0
Fe (%)	2.2	4.0	12.0	--	>2.5
Mn	531.0	610.0	3355.0	--	>500.0
Ni	17.0	62.0	106.0	21.0	>50.0
Pb	202.0	297.0	756.0	26.0	>60.0
Zn	214.0	303.0	5440.0	45.0	>200.0

* Guidelines for the pollution classification of Great Lakes harbor sediments, 1982.

Priority Pollutant Analyses. Sediments collected in proximity to stations J and K (see Figure 2) were screened for the presence of 135 organic compounds or families of compounds, including priority pollutants. A list of these compounds, except cyanide, which was not found at either station, is given in Appendices 1-6. Of these compounds, fifteen were found to occur in Station J sediments. Seven of these fifteen also occurred at Station K, but were generally in concentrations that were an order of magnitude or more lower (Table 7), except for the Aroclors (commercial PCB mixtures).

Table 7. Concentrations and Comparison of Compounds Identified in Sediments in Proximity to Stations J and K.

Compounds	MDL[1] (ppm)	Station J (ppm)	Station K (ppm)
Pentachlorophenol	0.8	7	*
Phenanthrene	0.8	29	*
Fluoranthene	0.8	64	1.0
Pyrene	0.8	25	0.5**
Benzo (a) anthracene	0.8	23	0.4**
Benzo (b) fluoranthene	0.8	22	*
Benzo (k) fluoranthene	0.8	14	*
Benzo (a) pyrene	0.8	22	*
Chrysene	0.8	23	0.9
Bis (2-ethylhexyl) phthalate	0.8	1400	*
Di-m-octyl phthalate	0.8	7	*
Arochlor 1221	10.0	140	220.0
Arochlor 1248	2.0	36	44.0
Arochlor 1260	1.0	7	9.0
Total Xylenes	5.0	4.7**	*

[1] MDL = Method Detection Limit * = Below Method Detection Limit ** = Presence indicated but less than MDL

Polychlorinated Biphenyl (PCB) Distributions. In the previous report (Ross *et al.* 1988), only total PCB concentrations were determined at the various stations and not the distribution of specific congeners. Reports of PCB toxicity suggest that lower-chlorinated congeners are more toxic to tested organisms (Eisler 1986) than are the more highly chlorinated congeners. Although this is generally true for laboratory test organisms in natural systems, the PCBs (13) thought to be most toxic range from trichlorobiphenyls to heptachlorobiphenyls (Duinker *et al.* 1988). In Waukegan Harbor, some of these more mobile, toxic isomers might be present in sediments further away from the outfall and may explain increased toxicity in the middle of the harbor.

An estimate of the amounts of commonly occurring, lower chlorinated PCBs and toxic congeners (up to pentachlorobiphenyl), identified at five harbor stations is given in Table 8. This list is necessarily qualitative at this time because of the varying PCB concentrations at the stations, and because standards were not available for all congeners in order to correct for response times. The predominant commercial PCB mixtures which contaminated the harbor were Aroclors 1242 and 1248 (D. Stallings, personal communication). The most predominant toxic congener at these stations, based on peak height, may be 3,4,4'- trichlorobiphenyl. We could not unequivocally identify this congener because it co-elutes with 2,2',3,4 - and 2,3,3',6 - tetrachlorobiphenyl. Of these three congeners, 2,3,3',6 - tetrachlorobiphenyl occurs as a major peak in Aroclor 1242 and as a minor peak in Aroclor 1248 (Sissons and Welti, 1971; Erickson, 1986), 3,4,4'- tetrachlorobiphenyl occurs as a minor peak in Aroclor 1242 (Sissons and Welti, 1971) and 2,2',3,4 - tetrachlorobiphenyl does not occur in either Aroclor 1242 or 1248 (Erickson, 1986).

Table 8. Estimated Relative Quantities of Selected Lower Chlorinated and Reported Toxic * PCB Congeners Occurring in Sediments from Stations in Waukegan Harbor.

PCB Congeners †	Stations 3	5	8	16	22
2, 2'; 2,6	-	-	-	-	+
2,3'	-	-	-	-	-
2,4'; 2,3	-	tr	tr	-	-
2,2',6	++++	++	++	++++	++
4,4'; 2,2',5	+	+	++	+	tr
2,4,2'	+++	++	+++	+	+++
2,6,3'	+	+	+	+	+
2,4',6; 2,2',3	+++++	++	+++	+	+
2,3',4;	+	++	+++	+	+
2,4',5	+	++	+++	+	+
2,4,4'	+++++	+++++	+++++	++	++
2,2',5,5'	+	+++	+++++	++	+
2,2',4',5	+	+++	+++++	++	+
2,2',4,4'	+	+++	+++++	++	+
* 3,4,4';2,3,3',6	+++++	+++++	+++++	+++++	+++++
*3,3',4,4'; 2,3,3'4',6	+	+	+	+	tr
*3,4,4',5	-	-	-	-	-
*2,3',4,4',5	-	-	-	-	-
*2,3,4,4',5	-	-	-	-	-
*2,3,4,4',5	-	-	-	-	-
*2,3,3',4,4' ; 2,2,',3,3',4,6'	++	+	+	+	+

† possibly present co-eluting congeners are listed for unresolved peaks

(tr) = trace amounts ; (-) = not present

Appendix 1.Acid compounds analyzed in sediments from stations J and K

STATION K			STATION J		
Compounds	MDL[1] PPM	Conc. PPM	Compounds	MDL[1] PPM	Conc. PPM
Phenol	0.8	BMDL[2]	Phenol	0.8	BMDL[2]
2-Chlorophenol	0.8	BMDL	2-Chlorophenol	0.8	BMDL
O-Cresol	0.8	BMDL	O-Cresol	0.8	BMDL
M & P-Cresol	0.8	BMDL	M &P-Cresol	0.8	BMDL
2-Nitrophenol	0.8	BMDL	2-Nitrophenol	0.8	BMDL
2,4-Dimethylphenol	0.8	BMDL	2,4-Dimethylphenol	0.8	BMDL
2,4-Dichlorophenol	0.8	BMDL	2,4-Dichlorophenol	0.8	BMDL
Benzoic Acid	4.0	BMDL	Benzoic Acid	4.0	BMDL
4-Chloro-3-methylphenol	0.8	BMDL	4-Chloro-3-methylphenol	0.8	BMDL
2,4,6-Trichlorophenol	0.8	BMDL	2,4,6-Trichlorophenol	0.8	BMDL
2,4,5-Trichlorophenol	0.8	BMDL	2,4,5-Trichlorophenol	0.8	BMDL
2,4-Dinitrophenol	4.0	BMDL	2,4-Dinitrophenol	4.0	BMDL
4-Nitrophenol	4.0	BMDL	4-Nitrophenol	4.0	BMDL
2-Methyl-4,6-dinitrophenol	4.0	BMDL	2-Methyl-4,6-dinitrophenol	4.0	BMDL
Pentachlorophenol	0.8	BMDL	Pentachlorophenol	0.8	BMDL

(1) MDL = Method Detection Limit
(2) BMDL = Below Method Detection Limit

Appendix 2.Concentrations of base/neutral compounds in sediments from Station J.

Compounds	MDL[1] PPM	Conc. PPM
Aniline	0.8	BMDL[2]
Bis(2-chloroethyl)ether	0.8	BMDL
1,3-Dichlorobenzene	0.8	BMDL
1,4-Dichlorobenzene	0.8	BMDL
Benzyl Alcohl	0.8	BMDL
1,2-Dichlorobenzene	0.8	BMDL
Bis(2-chloroisopropyl)ether	0.8	BMDL
Hexachloroethane	0.8	BMDL
N-nitroso-di-n-propylamine	0.8	BMDL
Nitrobenzene	0.8	BMDL
Isophorone	0.8	BMDL
Bis(2-chloroethoxy)methane	0.8	BMDL
1,2,4-Trichlorobenzene	0.8	BMDL
Naphthalene	0.8	BMDL
4-Chloroaniline	0.8	BMDL
Hexachlorobutadiene	0.8	BMDL
2-Methylnaphthalene	0.8	BMDL
Hexachlorocyclopentadiene	0.8	BMDL
2-Chloronaphthalene	0.8	BMDL
3-Nitroaniline	4.0	BMDL
Acenaphthylene	0.8	BMDL
Dimethyl phthalate	0.8	BMDL
2,6-Dinitrotolvene	0.8	BMDL
2-Nitroaniline	4.0	BMDL
Acenaphthene	0.8	BMDL
Dibenzofuran	0.8	BMDL
2,4-Dinitrotolvene	0.8	BMDL
Fluorene	0.8	BMDL
4-Chlorophenyl phenyl ether	0.8	BMDL
4-Nitroaniline	4.0	BMDL
Diethyl phthalate	0.8	BMDL
N-nitrosodiphenylamine	0.8	BMDL[2]
1,2-Diphenylhydrazine	0.8	BMDL
4-Bromophenyl phenyl ether	0.8	BMDL
Hexachlorobenzene	0.8	BMDL
Phenanthrene	0.8	29
Anthracene	0.8	BMDL
Dibutyl phthalate	0.8	BMDL
Fluoranthene	0.8	64
Pyrene	0.8	25
Benzidine	4.0	BMDL
Butyl benzyl Phthalate	0.8	BMDL
2,3,7,8-Tetrachlorodibenzo-p-dioxin	0.8	BMDL
Benzo (a) anthracene	0.8	23
Chrysene	0.8	23
3,3'-Dichlorobenzidine	4.0	BMDL
Bis(2-ethylexyl)phthalate	0.8	1400
Di-n-octyl phthalate	0.8	7
Benzo (b) fluoranthene	0.8	22
Benzo (k) fluoranthene	0.8	14
Benzo (a) pyrene	0.8	22
Indeno (1,2,3-cd) pyrene	0.8	BMDL
Dibenzo (a,h) anthracene	0.8	BMDL
Benzo (g,h,i) perylene	0.8	BMDL

SURROGATE RECOVERIES	% REC.
05-Nitrobenzene	67
2-Fluorobiphenyl	78
D10-Pyrene	52
D14-Terphenyl	56

(1) MDL = Method Detection Limit
(2) BMDL = Below Method Detection Limit

Appendix 3. Concentrations of base/neutral compounds in sediments from Station K.

Compounds	MDL[1] PPM	Conc. PPM
Aniline	0.8	BMDL[2]
Bis(2-chloroethyl)ether	0.8	BMDL
1,3-Dichlorobenzene	0.8	BMDL
1,4-Dichlorobenzene	0.8	BMDL
Benzyl Alcohl	0.8	BMDL
1,2-Dichlorobenzene	0.8	BMDL
Bis(2-chloroisopropyl)ether	0.8	BMDL
Hexachloroethane	0.8	BMDL
N-nitroso-di-n-propylamine	0.8	BMDL
Nitrobenzene	0.8	BMDL
Isophorone	0.8	BMDL
Bis(2-chloroethoxy)methane	0.8	BMDL
1,2,4-Trichlorobenzene	0.8	BMDL
Naphthalene	0.8	BMDL
4-Chloroaniline	0.8	BMDL
Hexachlorobutadiene	0.8	BMDL
2-Methylnaphthalene	0.8	BMDL
Hexachlorocyclopentadiene	0.8	BMDL
2-Chloronaphthalene	0.8	BMDL
3-Nitroaniline	4.0	BMDL
Acenaphthylene	0.8	BMDL
Dimethyl phthalate	0.8	BMDL
2,6-Dinitrotolvene	0.8	BMDL
2-Nitroaniline	4.0	BMDL
Acenaphthene	0.8	BMDL
Dibenzofuran	0.8	BMDL
2,4-Dinitrotolvene	0.8	BMDL
Fluorene	0.8	BMDL
4-Chlorophenyl phenyl ether	0.8	BMDL
4-Nitroaniline	4.0	BMDL
Diethyl phthalate	0.8	BMDL
N-nitrosodiphenylamine	0.8	BMDL[2]
1,2-Diphenylhydrazine	0.8	BMDL
4-Bromophenyl phenyl ether	0.8	BMDL
Hexachlorobenzene	0.8	BMDL
Phenanthrene	0.8	BMDL
Anthracene	0.8	BMDL
Dibutyl phthalate	0.8	BMDL
Fluoranthene	0.8	1.0
Pyrene	0.8	*0.5
Benzidine	4.0	BMDL
Butyl benzyl Phthalate	0.8	BMDL
2,3,7,8-Tetrachlorodibenzo-p-dioxin	0.8	BMDL
Benzo (a) anthracene	0.8	*0.4
Chrysene	0.8	0.9
3,3'-Dichlorobenzidine	4.0	BMDL
Bis(2-ethylexyl)phthalate	0.8	BMDL
Di-n-octyl phthalate	0.8	BMDL
Benzo (b) fluoranthene	0.8	BMDL
Benzo (k) fluoranthene	0.8	BMDL
Benzo (a) pyrene	0.8	BMDL
Indeno (1,2,3-cd) pyrene	0.8	BMDL
Dibenzo (a,h) anthracene	0.8	BMDL
Benzo (g,h,i) perylene	0.8	BMDL

SURROGATE RECOVERIES	% REC.
05-Nitrobenzene	79
2-Fluorobiphenyl	72
D10-Pyrene	52
D14-Terphenyl	53

(1) MDL = Method Detection Limit
(2) BMDL = Below Method Detection Limit
* Presence indicated but less than MDL

Appendix 4. Pesticides and PCBs determined in sediments from Stations J and K.

Station J			Station K		
Compounds	MDL[1] PPM	Conc. PPM	Compounds	MDL[1] PPM	Conc. PPM
Aldrin	0.25	BMDL[2]	Aldrin	0.25	BMDL[2]
alpha-BHC	0.25	BMDL	alpha-BHC	0.25	BMDL
beta-BHC	0.5	BMDL	beta-BHC	0.5	BMDL
delta-BHC	0.25	BMDL	delta-BHC	0.25	BMDL
gamma-BHC	0.25	BMDL	gamma-BHC	0.25	BMDL
Chlordane	1.25	BMDL	Chlordane	1.25	BMDL
4,4'-DDD	0.5	BMDL	4,4'-DDD	0.5	BMDL
4,4'-DDE	0.5	BMDL	4,4'-DDE	0.5	BMDL
4,4'-DDT	0.5	BMDL	4,4'-DDT	0.5	BMDL
Dieldrin	0.5	BMDL	Dieldrin	0.5	BMDL
Endosulfan I	0.5	BMDL	Endosulfan I	0.5	BMDL
Endosulfan II	0.5	BMDL	Endosulfan II	0.5	BMDL
Endosulfan Sulfate	0.5	BMDL	Endosulfan Sulfate	0.5	BMDL
Endrin	0.5	BMDL	Endrin	0.5	BMDL
Endrin Aldehyde	0.5	BMDL	Endrin Aldehyde	0.5	BMDL
Endrin Ketone	0.5	BMDL	Endrin Ketone	0.5	BMDL
Heptachlor	0.25	BMDL	Heptachlor	0.25	BMDL
Heptachlor Epoxide	0.25	BMDL	Heptachlor Epoxide	0.25	BMDL
4,4'-Methoxychlor	1	BMDL	4,4'-Methoxychlor	1	BMDL
Toxaphene	6.25	BMDL	Toxaphene	6.25	BMDL
PCB - 1016	4	BMDL	PCB - 1016	4	BMDL
PCB - 1221	10	140	PCB - 1221	10	220
PCB - 1232	10	BMDL	PCB - 1232	10	BMDL
PCB - 1242	4	BMDL	PCB - 1242	4	BMDL
PCB - 1248	2	36	PCB - 1248	2	44
PCB - 1254	1	BMDL	PCB - 1254	1	BMDL
PCB - 1260	1	7	PCB - 1260	1	9

(1) MDL = Method Detection Limit
(2) BMDL = Below Method Detection Limit

Appendix 5. Volatile compounds determined in sediments from Station J.

Compounds	MDL[1] PPM	Conc. PPM	Compounds	MDL[1] PPM	Conc. PPM
Chloromethane	5	BMDL[2]	Tolvene	5	BMDL[2]
Bromomethane	5	BMDL	Chlorobenzene	5	BMDL
Vinyl chloride	5	BMDL	Ethyl Benzene	5	BMDL
Chloroethane	5	BMDL	Styrene	5	BMDL
Methylene chloride	5	ND [3]	Total Xylenes	5	4.7
Trichlorofluormethane	5	BMDL	Acrylonitrile	100	BMDL
Acetone	10	BMDL	Acrolein	100	BMDL
Carbon disulfide	5	BMDL			
1,1-Dichloroethene	5	BMDL			
1,1-Dichloroethane	5	BMDL			
Trans-1,2-dichloroethene	5	BMDL			
Chloroform	5	BMDL			
2-Butanone	10	BMDL			
1,2-Dichloroethane	5	BMDL			
1,1,1-Trichloroethane	5	BMDL			
Carbon tetrachloride	5	BMDL			
Vinyl acetate	10	BMDL			
Bromodichloromethane	5	BMDL			
1,2-Dichloropropane	5	BMDL			
Trans-1,3-dichloropropene	5	BMDL			
Trichloroethene	5	BMDL			
Benzene	5	BMDL			
Dibromochloromethane	5	BMDL			
1,1,2-Trichloroethane	5	BMDL			
Cis-1,3-dichloropropene	10	BMDL			
2-Chloroethylvinylether	10	BMDL			
Bromoform	5	BMDL			
4-Methyl-2-pentanone	10	BMDL			
2-Hexanone	10	BMDL			
Tetrachloroethene	5	BMDL			
1,1,2,2-Tetrachloroethane	5	BMDL			
SURROGATE RECOVERIES	% REC.				
D4-1,1-Dichloroethane	81				
D8-Tolvene	102				
1,4-Bromofluorobenzene	107				

(1) MDL = Method Detection Limit
(2) BMDL = Below Method Detection Limit
(3) ND = Not Determined
* Present be less than MDL

Appendix 6. Volatile compounds determined in sediments from Station K.

Compounds	MDL[1] PPM	Conc. PPM	Compounds	MDL[1] PPM	Conc. PPM
Chloromethane	5	BMDL[2]	Tolvene	5	BMDL[2]
Bromomethane	5	BMDL	Chlorobenzene	5	BMDL
Vinyl chloride	5	BMDL	Ethyl Benzene	5	BMDL
Chloroethane	5	BMDL	Styrene	5	BMDL
Methylene chloride	5	ND [3]	Total Xylenes	5	BMDL
Trichlorofluormethane	5	BMDL	Acrylonitrile	100	BMDL
Acetone	10	BMDL	Acrolein	100	BMDL
Carbon disulfide	5	BMDL			
1,1-Dichloroethene	5	BMDL			
1,1-Dichloroethane	5	BMDL			
Trans-1,2-dichloroethene	5	BMDL			
Chloroform	5	BMDL			
2-Butanone	10	BMDL			
1,2-Dichloroethane	5	BMDL			
1,1,1-Trichloroethane	5	BMDL			
Carbon tetrachloride	5	BMDL			
Vinyl acetate	10	BMDL			
Bromodichloromethane	5	BMDL			
1,2-Dichloropropane	5	BMDL			
Trans-1,3-dichloropropene	5	BMDL			
Trichloroethene	5	BMDL			
Benzene	5	BMDL			
Dibromochloromethane	5	BMDL			
1,1,2-Trichloroethane	5	BMDL			
Cis-1,3-dichloropropene	10	BMDL			
2-Chloroethylvinylether	10	BMDL			
Bromoform	5	BMDL			
4-Methyl-2-pentanone	10	BMDL			
2-Hexanone	10	BMDL			
Tetrachloroethene	5	BMDL			
1,1,2,2-Tetrachloroethane	5	BMDL			
SURROGATE RECOVERIES	% REC.				
D4-1,1-Dichloroethane	96				
D8-Tolvene	105				
1,4-Bromofluorobenzene	94				

(1) MDL = Method Detection Limit
(2) BMDL = Below Method Detection Limit
(3) ND = Not Determined

Canonie Environmental, 1991
New Slip Investigation
(Sediment and Surface Water Quality)

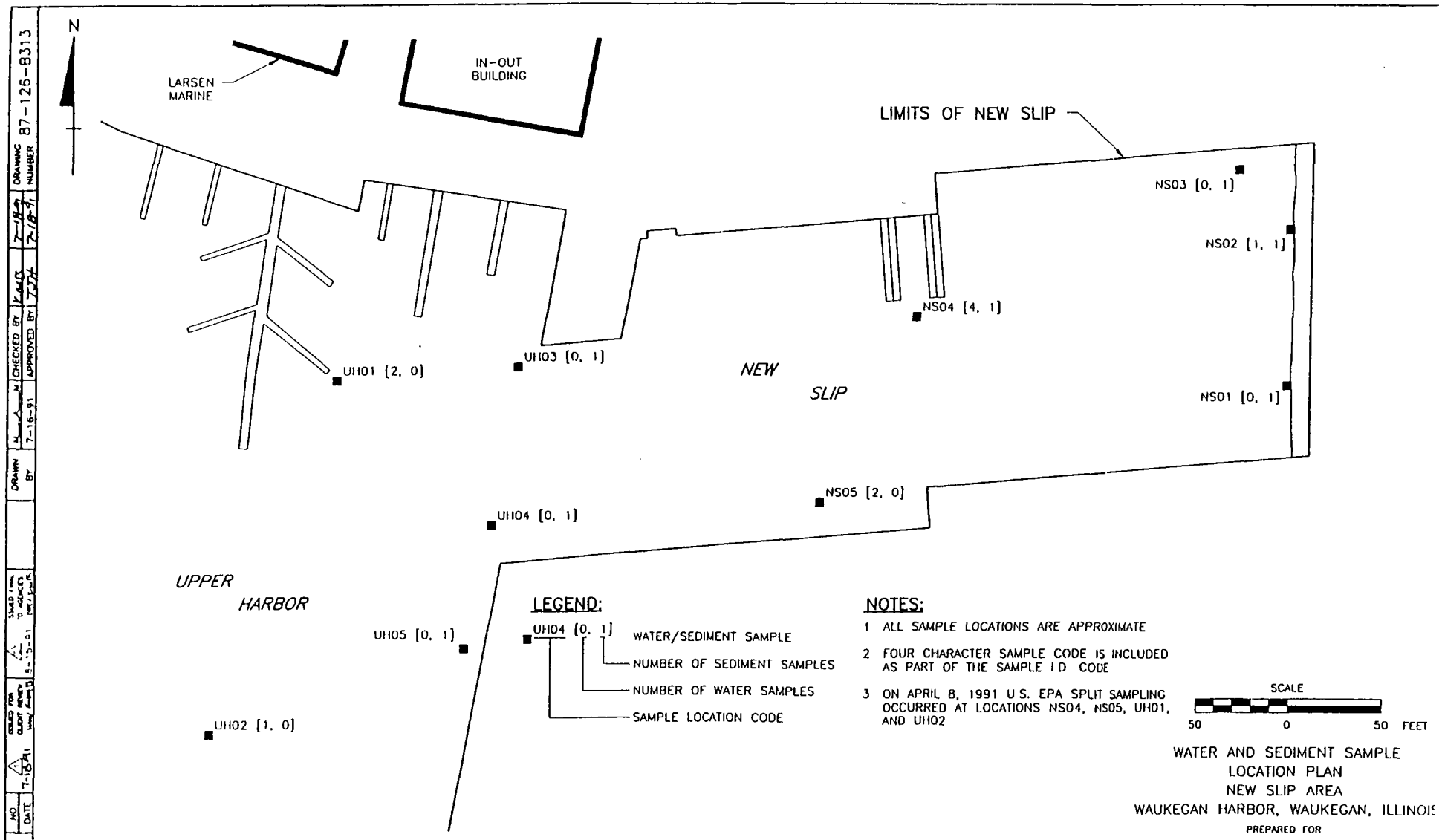

WATER AND SEDIMENT SAMPLE
LOCATION PLAN
NEW SLIP AREA
WAUKEGAN HARBOR, WAUKEGAN, ILLINOIS

PREPARED FOR
WAUKEGAN HARBOR TRUST

Canonie Environmental

DATE 7-16-91	FIGURE 6	DRAWING NUMBER 87-126-8313
SCALE AS SHOWN		

REVISIONS | NO | DATE | DRAWN BY | CHECKED BY | APPROVED BY | DRAWING NUMBER 87-126-8313

Table 7

SUMMARY SEMIVOLATILE ORGANICS RESULTS
NEW SLIP AND UPPER HARBOR WATER AND SEDIMENT

SAMPLE INFORMATION									
Sample I.D.	NS04-O	NS04-O	NS05-O	NS05-O	UH01-O	UH02-O	NS02-O	NS02-O	OF
Sample Name	NewSlip-1	NewSlip-1DL	NewSlip-2	NewSlip-2DL	Harbor-1	Harbor-2	Scum	Scum DL	Fieldblank
Sample Matrix	Water	Water	Water	Water	Water	Water	Water	Water	Water
Kemron I.D.	04-145-05	04-145-05	04-145-02	04-145-02	04-145-01	04-145-06	04-145-03	04-145-03	04-146-04
Sample Depth (ft)	3 0	3.0	3 0	3 0	15 0	15 0	0 0	0 0	NA
Sample Date	4/8/91	4/8/91	4/8/91	4/8/91	4/8/91	4/8/91	4/8/91	4/8/91	4/8/91
COMPOUNDS									
Phenol	4000	9700	6500	13000			3400	7500	
2-Methylphenol	1400	1500	2100	2000			1200	1100	
4-Methylphenol	2700	4100	4700	5300			2600	3200	
2,4-Dimethylphenol	210		240	250			170		
Benzoic Acid									
Naphthalene	18		10				9		
2-Methylnaphthalene	21		12				10		
Acenaphthylene	5		5				12		
Acenaphthene	54		60				66		
Dibenzofuran	32		33				45		
Fluorene	44		47				98		
Phenanathrene	53		53				480	570	
Anthracene	5		5				75		
Fluoranthene	18		21				460	430	
Pyrene	10		13				310	290	
Benzo (a) Anthracene [c]							95		
Chrysene [c]							120		
bis (2-Ethylhexyl) Phthalate									
Benzo (b) Fluoranthene [c]							68		
Benzo (k) Fluoranthene [c]							49		
Benzo (a) Pyrene [c]							55		
Indeno (1,2,3-cd) Pyrene [c]							25		
Dibenzo (a,h) Anthracene [c]							8		
Benzo (g,h,i) Perylene							22		
Total Phenols	8310	15300	12540	20550	0	0	7370	11800	0
Total Carc PNAs	0	0	0	0	0	0	420	0	0
Total Non-Carc. PNAs	258	0	259	0	0	0	1577	1290	0
Total PNAs	258	0	259	0	0	0	1997	1290	0

Table 7

SUMMARY SEMIVOLATILE ORGANICS RESULTS
NEW SLIP AND UPPER HARBOR WATER AND SEDIMENT
(continued)

SAMPLE INFORMATION

Sample I.D.	NS04-O	NS04-O	NS05-O	NS05-O	OF	UH03-O	UH03-O	UH04-O	UH05-O
Sample Name	NewSlip-1A	NewSlip-1ADL	NewSlip-2A	NewSlip-2ADL	Rinseblank	Sediment-1	Sediment-1DL	Sediment-2	Sediment-3
Sample Matrix	Water	Water	Water	Water	Water	Soil	Soil	Soil	Soil
Kemron I.D.	04-298-01	04-298-01	04-298-05	04-298-05	04-298-04	04-371-03	04-371-03	04-371-04	04-371-07
Sample Depth (ft)	3.0	3.0	3.0	3.0	NA	0.0-1.0	0.0-1.0	0.0-1.0	0.0-1.0
Sample Date	4/19/91	4/19/91	4/19/91	4/19/91	4/19/91	4/25/91	4/25/91	4/25/91	4/25/91

COMPOUNDS

Phenol	450	570	430	460		3100	3100		
2-Methylphenol	330	420	350	360		1000	950		
4-Methylphenol	480	610	490	530		9900	10000	73	
2,4-Dimethylphenol	59	62	60	58		1800	1500		110
Benzoic Acid	5					160			
Naphthalene	3					4700	5000	750	130
2-Methylnaphthalene						360		370	100
Acenaphthylene						91		240	
Acenaphthene	4		4			1400	1300	2100	
Dibenzofuran						820	710	1500	49
Fluorene						1700	1500	2600	82
Phenanathrene						3100	3100	5900	240
Anthracene						1100	920	2400	110
Fluoranthene	14		14			2100	2100	4300	260
Pyrene	10		10			1500	1400	3000	210
Benzo (a) Anthracene [c]						580	570	1300	110
Chrysene [c]						660	640	2100	180
bis (2-Ethylhexyl) Phthalate	5		5		4	160		57	180
Benzo (b) Fluoranthene [c]						330		690	99
Benzo (k) Fluoranthene [c]						290		540	82
Benzo (a) Pyrene [c]						280		680	83
Indeno (1,2,3-cd) Pyrene [c]						160		420	
Dibenzo (a,h) Anthracene [c]								100	
Benzo (g,h,i) Perylene						150		360	54
Total Phenols	1319	1662	1330	1408	0	15800	15550	73	110
Total Carc. PNAs	0	0	0	0	0	2300	1210	5830	554
Total Non-Carc. PNAs	41	0	33	0	4	17341	16030	23577	1415
Total PNAs	41	0	33	0	4	19641	17240	29407	1969

Table 7

SUMMARY SEMIVOLATILE ORGANICS RESULTS
NEW SLIP AND UPPER HARBOR WATER AND SEDIMENT
(continued)

SAMPLE INFORMATION									
Sample I.D.	NS01-O	NS01-OD	NS02-O	NS03-O	NS04-O	OF	NS04-O	NS04	
Sample Name	NS01	NS01	NS02	NS03	NS04	Blank	NS04	NS04	
Sample Matrix	Soil	Soil	Soil	Soil	Water	Water	Soil	Water	
Kemron I.D.	05-007-01	05-007-02	05-007-03	05-007-04	05-026-01	05-026-02	05-064-01	06-220-01	
Sample Depth (ft)	0.0-1.0	0.0-1.0	0.0-1.0	0.0-1.0	3.0	NA	3.0	3.0	
Sample Date	4/30/91	4/30/91	4/30/91	4/30/91	4/30/91	4/30/91	5/2/91	6/17/91	
COMPOUNDS									
Phenol		380			46		340		
2-Methylphenol					82		88		
4-Methylphenol			99		62		170		
2,4-Dimethylphenol					30		78		
Benzoic Acid									
Naphthalene			75	70			1500		
2-Methylnaphthalene			44				630		
Acenaphthylene							160		
Acenaphthene	55	89	57	56			1100		
Dibenzofuran			52	47			950		
Fluorene				82			1700		
Phenanathrene	63	41	180	280			5600		
Anthracene			53	86			1800		
Fluoranthene	140	110	220	330	3		3900		
Pyrene	100	83	170	220	4		2500		
Benzo (a) Anthracene [c]	49	44	100	93			940		
Chrysene [c]	78	59	130	100			1200		
bis (2-Ethylhexyl) Phthalate					3		190	13	
Benzo (b) Fluoranthene [c]	56		83				610		
Benzo (k) Fluoranthene [c]	44		74	52			470		
Benzo (a) Pyrene [c]			62				480		
Indeno (1,2,3-cd) Pyrene [c]							240		
Dibenzo (a,h) Anthracene [c]									
Benzo (g,h,i) Perylene							190		
Total Phenols	0	380	99	0	220	0	676	0	
Total Carc. PNAs	227	103	449	245	0	0	3940	0	
Total Non-Carc PNAs	358	323	851	1171	10	0	20220	13	
Total PNAs	585	426	1300	1416	10	0	24160	13	

SUMMARY SEMIVOLATILE ORGANICS RESULTS
NEW SLIP AND UPPER HARBOR WATER AND SEDIMENT
(continued)

NOTES:

1. All results presented in micrograms per kilogram or micrograms per liter (parts per billion).
2 Semivolatile compounds not listed were not detected in any sample.
3 Results presented in boldface were detected above the quantification limit
4 Results presented in normal typeface were detected below the quantification limit and estimated.
5 Shaded results exceeded the quantification range and a diluted sample was analyzed.
6 NA indicates not applicable.
7 Bracketed 'c' indicates compound is carcinogenic.

Table 8

SUMMARY VOLATILE ORGANIC RESULTS
NEW SLIP AND UPPER HARBOR WATER AND SEDIMENT

SAMPLE INFORMATION

Sample I.D.	NS04-O	NS05-O	UH01-O	UH02-O	NS02-O	OF	UH03-O	UH04-O	UH05-O
Sample Name	NewSlip-1	NewSlip-2	Harbor-1	Harbor-2	Scum	Fieldblank	Sediment-1	Sediment-2	Sediment-3
Sample Matrix	Water	Water	Water	Water	Water	Water	Soil	Soil	Soil
Kemron I.D.	04-146-05	04-146-02	04-146-01	04-146-06	04-146-03	04-146-03	04-371-03	04-371-04	04-371-07
Sample Depth (ft)	3.0	3.0	15.0	15.0	0.0	NA	0.0-1.0	0.0-1.0	0.0-1.0
Sample Date	4/8/91	4/8/91	4/8/91	4/8/91	4/8/91	4/8/91	4/25/91	4/25/91	4/25/91

COMPOUNDS

Methylene Chloride	9 B	10 B	13 B	10 B	10 B	8 B	110	170 B	140 B
Acetone	19	22	10 U	10 U	10 U	10 U	190	12 U	13 U
Carbon Disulfide	5 U	5 U	5 U	5 U	7	5 U	7 U	6 U	7 U
2-Butanone	10 U	10 U	10 U	10 U	10 U	10 U	13 U	29	13 U
Benzene	8	9	14	16	10	5 U	37	6 U	7 U
Toluene	2 BJ	11 B	11 B	12 B	3 BJ	2 BJ	22	6 U	15
Ethylbenzene	1 J	2 J	5 U	5 U	5 U	5 U	44	6 U	7 U
Total Xylenes	4 J	5	29	36	3 J	1 J	130	6 U	7 U

SAMPLE INFORMATION

Sample I.D.	NS04-O	NS01-O	NS01-OD	NS02-O	NS03-O	OF	NS04-O	NS04
Sample Name	NS04	NS01	NS01	NS02	NS03	Blank	NS04	NS04
Sample Matrix	Water	Soil	Soil	Soil	Soil	Water	Soil	Water
Kemron I.D.	05-026-01	05-007-01	05-007-02	05-007-03	05-007-04	05-026-02	05-064-01	06-220-01
Sample Depth (ft)	3.0	0.0-1.0	0.0-1.0	0.0-1.0	0.0-1.0	NA	0.0-1.0	3.0
Sample Date	4/30/91	4/30/91	4/30/91	4/30/91	4/30/91	4/30/91	5/2/91	6/17/91

COMPOUNDS

Methylene Chloride	6 B	88	17	16	220	4 J	180	5 U
Acetone	25	42	84	57	120	15	26 B	10 U
Carbon Disulfide	5 U	6 U	6 U	6 U	6 U	5 U	7 U	5 U
2-Butanone	7 J	32	12 U	11 U	12 U	10 U	5 J	28
Benzene	5 U	6 U	6 U	6 U	6 U	2 J	7 U	5 U
Toluene	2 J	7	4 J	6 U	6 U	42	7 U	1 J
Ethylbenzene	5 U	6 U	6 U	6 U	6 U	5 U	3 J	5 U
Total Xylenes	5 U	6 U	6 U	6 U	6 U	5 U	3 J	5 U

NOTES:

1 All results presented in micrograms per kilogram or microgram per liter (parts per billion).
2 Volatile compounds not listed were not detected in any sample.
3 Qualifier 'U' indicates not detected at given quantification limit
4 Qualifier 'J' indicates detected below quantification limit and estimated
5 Qualifier 'B' indicates compound was also detected in associated laboratory blank
6. NA indicates not applicable.

SUMMARY ANALYTICAL RESULTS
METALS AND CYANIDE
NEW SLIP AND UPPER HARBOR WATER AND SEDIMENT

SAMPLE INFORMATION

Sample I.D.		NS04-O	NS05-O	UH01-O	UH02-O	NS02-O	OF	NS04-O
Sample Name		NewSlip-1	NewSlip-2	Harbor-1	Harbor-2	Scum	Fieldblank	NewSlip-1A
Sample Matrix		Water	Water	Water	Water	Water	Water	Water
Kemron I D.		04-145-05	04-145-02	04-145-01	04-145-06	04-145-03	04-145-04	04-298-01
Sample Depth (ft)		3.0	3.0	15.0	15.0	0.0	NA	3.0
Sample Date		4/8/91	4/8/91	4/8/91	4/8/91	4/8/91	4/8/91	4/19/91
METAL	(mg/L or mg/kg)							
Antimony		<0.2	<0.2	<0.2	<0.2	<0.2	<0.2	NT
Arsenic		0.7	0.6	0.006	0.005	0.6	<0.004	0 22
Beryllium		<0.01	<0.01	<0.01	<0.01	<0.01	<0.01	NT
Cadmium		<0.01	<0.01	<0.01	<0.01	<0.01	<0.01	NT
Chromium		<0.02	<0.02	<0.02	<0.02	<0.02	<0.02	NT
Copper		<0.02	<0.02	<0.02	<0.02	<0 02	<0.02	NT
Iron		1.2	1.3	0.52	0.21	1.3	<0.04	NT
Lead		<0.005	<0.005	0.005	<0.005	<0.005	<0.005	NT
Mercury		<0.0002	<0.0002	<0.0002	<0 0002	<0.0002	<0 0002	NT
Nickel		<0.04	<0.04	<0.04	<0.04	<0.04	<0.04	NT
Selenium		0.01	0.01	<0.004	<0.004	0.01	<0 004	NT
Silver		<0.01	<0.01	<0.01	<0.01	<0.01	<0.01	NT
Thallium		<0.005	<0.005	<0.005	<0.005	<0.005	<0 005	NT
Zinc		0.07	0.05	0.02	0.02	0.06	0.02	NT
Cyanide	(mg/L or mg/kg)	NT	NT	NT	NT	NT	NT	NT

NOTES:
1. NT Indicates no test was run.
2. NA Indicates not applicable.

Table 9

SUMMARY ANALYTICAL RESULTS
METALS AND CYANIDE
NEW SLIP AND UPPER HARBOR WATER AND SEDIMENT
(continued)

SAMPLE INFORMATION

Sample I.D.		NS05-O	OF	NS04-O	UH01-O	UH03-O	UH04-O	UH05-O
Sample Name		NewSlip-2A	Rinseblank	NewSlip-1B	Harbor-1B	Sediment-1	Sediment-2	Sediment-3
Sample Matrix		Water	Water	Water	Water	Soil	Soil	Soil
Kemron I.D.		04-298-05	04-298-04	04-371-01	04-371-02	04-371-03	04-371-04	04-371-07
Sample Depth (ft)		3.0	NA	3.0	15.0	0.0-1.0	0.0-1.0	0.0-1.0
Sample Date		4/19/91	4/19/91	4/25/91	4/25/91	4/25/91	4/25/91	4/25/91
METAL	(mg/L or mg/kg)							
Antimony		NT	NT	NT	NT	<10	<10	<10
Arsenic		0.21	<0.004	NT	NT	13	1.8	1.9
Beryllium		NT	NT	NT	NT	<0.5	<0.5	<0.5
Cadmium		NT	NT	NT	NT	<0.5	<0.5	<0.5
Chromium		NT	NT	NT	NT	5	2	4
Copper		NT	NT	NT	NT	14	<2	8
Iron		NT	NT	NT	NT	3900	2400	2400
Lead		NT	NT	NT	NT	20	<10	<10
Mercury		NT	NT	NT	NT	<0.25	0.3	<0.25
Nickel		NT	NT	NT	NT	2	<2	4
Selenium		NT	NT	NT	NT	0.3	<0.2	0.9
Silver		NT	NT	NT	NT	<2	<2	<2
Thallium		NT	NT	NT	NT	<0.25	<0.25	<0.25
Zinc		NT	NT	NT	NT	34	13	7.4
Cyanide	(mg/L or mg/kg)	NT	NT	0.02	<0.01	NT	NT	NT

NOTES:
1. NT indicates no test was run
2. NA indicates not applicable.

Table 9

SUMMARY ANALYTICAL RESULTS
METALS AND CYANIDE
NEW SLIP AND UPPER HARBOR WATER AND SEDIMENT
(continued)

SAMPLE INFORMATION								
Sample I.D.		NS04-O	NS01-O	NS01-OD	NS02-O	NS03-O	OF	NS04-O
Sample Name		NS04	NS01	NS01	NS02	NS03	Blank	NS04
Sample Matrix		Water	Soil	Soil	Soil	Soil	Water	Soil
Kemron I.D.		05-026-01	05-007-01	05-007-02	05-007-03	05-007-04	05-026-02	05-064-01
Sample Depth (ft)		3.0	0 0-1.0	0.0-1.0	0.0-1.0	0 0-1.0	NA	0.0-1.0
Sample Date		4/30/91	4/30/91	4/30/91	4/30/91	4/30/91	4/30/91	5/2/91
METAL	(mg/L or mg/kg)							
Antimony		<0.25	< 10	< 10	< 10	< 10	<0 25	< 10
Arsenic		0.32	3 5	3.1	2.3	3.5	<0.004	15
Beryllium		<0.01	<0.5	<0.5	<0.5	<0.5	<0.01	<0.5
Cadmium		<0.01	<0.5	<0.5	<0.5	<0.5	<0.01	<0.5
Chromium		<0.02	5	4	3	2	<0.02	4
Copper		<0.02	2	3	<2	<2	<0.02	2
Iron		0 61	3500	3300	2800	1700	0.18	3600
Lead		<0.005	2 5	2.0	1.4	0.9	0.007	< 10
Mercury		<0.0002	<0.1	<0.1	<0.1	<0 1	<0.0002	<0.25
Nickel		<0 04	3	2	2	<2	<0.04	3
Selenium		0.008	<0 2	<0.2	0.2	0.4	<0.004	0 2
Silver		<0.01	<2	<2	<2	<2	<0.01	<2
Thallium		<0.005	<0.25	<0.25	<0 25	<0 25	<0.005	<0 25
Zinc		0.07	18	14	13	9.4	0.04	22
Cyanide	(mg/L or mg/kg)	0.02	<0 5	<0.5	<0.5	<0.5	<0.01	<0.5

NOTES:
1. NT Indicates no test was run.
2. NA Indicates not applicable

Hey and Associates, Inc. 1993
IEPA Sampling at the Intakes
of the Waukegan Waterworks
(Sediment Quality)

Location of sediment samples taken near the Waukegan Water Treatment Plant intakes April 24, 1992. Samples were collected and analyzed by the IEPA.

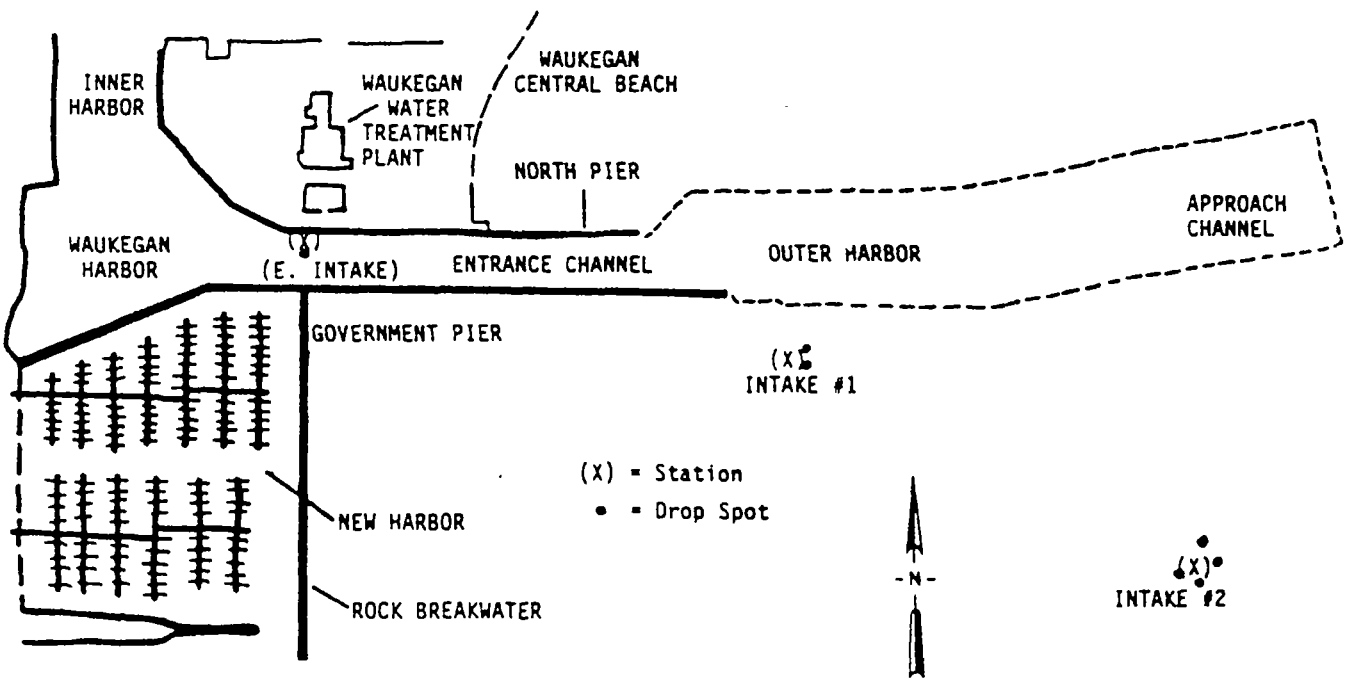

ILLINOIS ENVIRONMENTAL PROTECTION AGENCY

SAMPLE NUMBER : D218728
SAMPLING POINT DESC. : WAUKEGAN HARBR CHNL/EMER INTK WWTP

SUBMITTING SOURCE # : GLS 02 SITE # :
DATE COLLECTED : 920824 TIME COLLECTED : 1410 SAMPLING PROGRAM : 2C

COLLECTED BY : GLS DELIVERED BY : CMS
COMMENTS : CORE-SEDIMENT ORGANICS
FUNDING CODE : WPOC AGENCY ROUTING : 01 UNIT CODE :
SAM TYPE CODE : ISED SAMPLE PURPOSE CODE : 5 REPORTING INDICATOR : S

DATE RECEIVED : 920917 TIME RECEIVED : 0935 RECEIVED BY : M E
LAB OBSERVATIONS : 1-502 SEDIMENT TRIP BL SAMP :
SUPERVISORS INITIALS : JTH NOTE : K = LESS THAN VALUE

P39519	TOTAL PCBS	UG/KG	1090
P39330	ALDRIN	UG/KG	10K
P39365	DIELDRIN	UG/KG	1.0K
P39359	TOTAL DDT	UG/KG	50K
P39320	O,P'-DDE	UG/KG	5K
P39321	P,P'-DDE	UG/KG	5K
P39310	O,P'-DDD	UG/KG	5K
P39311	P,P'-DDD	UG/KG	5K
P39300	O,P'-DDT	UG/KG	5K
P39301	P,P'-DDT	UG/KG	15
39351	TOTAL CHLORDANE	UG/KG	25K
P39064	CHLORDANE,CIS ISOMER	UG/KG	10K
P39067	CHLORDANE,TRANS ISOMER	UG/KG	10K
P39343	ENDRIN	UG/KG	5K
P39481	METHOXYCHLOR	UG/KG	25K
P39078	ALPHA-BHC	UG/KG	10K
P39345	GAMMA-BHC (LINDANE)	UG/KG	10K
P39701	HEXACHLOROBENZENE	UG/KG	10K
P39413	HEPTACHLOR	UG/KG	10K
P39420	HEPTACHLOR EPOXIDE	UG/KG	10K

CMC 10/30/92

ILLINOIS ENVIRONMENTAL PROTECTION AGENCY

SAMPLE NUMBER : 0218729
SAMPLING POINT DESC. : WAUKEGAN HARBOR CHANL/EMER INTK WWTP

SUBMITTING SOURCE # : CZS 02 SITE # :
DATE COLLECTED : 920424 TIME COLLECTED : 1410 SAMPLING PROGRAM : 28

COLLECTED BY : CLD DELIVERED BY : CMS
COMMENTS : CORE-SEDIMENT ORGANICS
FUNDING CODE : APOO AGENCY ROUTING : 01 UNIT CODE :
SAM TYPE CODE : ISED SAMPLE PURPOSE CODE : 5 REPORTING INDICATOR : B

DATE RECEIVED : 920617 TIME RECEIVED : 0935 RECEIVED BY : M E
LAB OBSERVATIONS : 1-502 SEDIMENT TRIP BL SAM# :
SUPERVISORS INITIALS : JTM NOTE : K = LESS THAN VALUE

P39519	TOTAL PCBS	UG/KG	1360
P39333	ALDRIN	UG/KG	5K
P39383	DIELDRIN	UG/KG	5K
P39359	TOTAL DDT	UG/KG	50K
P39320	O,P'-DDE	UG/KG	5K
P39321	P,P'-DDE	UG/KG	5K
P39310	O,P'-DDD	UG/KG	5K
P39311	P,P'-DDD	UG/KG	5
P39300	O,P'-DDT	UG/KG	5K
P39301	P,P'-DDT	UG/KG	5K
P39351	TOTAL CHLORDANE	UG/KG	25K
P39004	CHLORDANE,CIS ISOMER	UG/KG	10K
P39007	CHLORDANE,TRANS ISOMER	UG/KG	10K
P39393	ENDRIN	UG/KG	5K
P39401	METHOXYCHLOR	UG/KG	25K
P39070	ALPHA-BHC	UG/KG	5K
P39343	GAMMA-BHC (LINDANE)	UG/KG	5K
P39701	HEXACHLOROCYCLOPENTADIENE	UG/KG	5K
P39413	HEPTACHLOR	UG/KG	5K
P39420	HEPTACHLOR EPOXIDE	UG/KG	5K

CMC 10/30/92

ILLINOIS ENVIRONMENTAL PROTECTION AGENCY

SAMPLE NUMBER : D218730
SAMPLING POINT DESC. : LAKE MICHIGAN/INTK #1 = OF PIER

SUBMITTING SOURCE # : L UD SITE # :
DATE COLLECTED : 920424 TIME COLLECTED : 1301 SAMPLING PROGRAM : 28

COLLECTED BY : CLS DELIVERED BY : CMS
COMMENTS : CORE-SEDIMENT ORGANICS
FUNDING CODE : WPUG AGENCY ROUTING : 01 UNIT CODE :
SAM TYPE CODE : ISED SAMPLE PURPOSE CODE : 5 REPORTING INDICATOR : =

DATE RECEIVED : 920617 TIME RECEIVED : 0935 RECEIVED BY : M E
LAB OBSERVATIONS : 1-0GI SEDIMENT TRIP BL SAM# :
SUPERVISORS INITIALS : JTM NOTE : K = LESS THAN VALUE

P39517	TOTAL PCBS	UG/KG	13
P39533	ALDRIN	UG/KG	1.0K
P39363	DIELDRIN	UG/KG	1.0K
P39357	TOTAL DDT	UG/KG	10K
P39365	O,P'-DDE	UG/KG	1.0K
P39361	P,P'-DDE	UG/KG	1.0K
P39315	O,P'-DDD	UG/KG	1.0K
P39311	P,P'-DDL	UG/KG	1.0K
P39305	O,P'-DDT	UG/KG	1.0K
P39301	P,P'-DDT	UG/KG	1.0K
P39351	TOTAL CHLORDANE	UG/KG	5.0K
P39064	CHLORDANE,CIS ISOMER	UG/KG	2.0K
P39067	CHLORDANE,TRANS ISOMER	UG/KG	2.0K
P39393	ENDRIN	UG/KG	1.0K
P39481	METHOXYCHLOR	UG/KG	5.0K
P39078	ALPHA-BHC	UG/KG	1.0K
P39343	GAMMA-BHC (LINDANE)	UG/KG	1.0K
P39761	HEXACHLOROBENZENE	UG/KG	1.0K
P39413	HEPTACHLOR	UG/KG	1.0K
P39422	HEPTACHLOR EPOXIDE	UG/KG	1.0K

CMC 10/30/92

ILLINOIS ENVIRONMENTAL PROTECTION AGENCY

SAMPLE NUMBER : D218731
SAMPLING POINT DESC. : LAKE MICHIGAN/INTK #1 E OF PIER

SUBMITTING SOURCE # : L UD SITE # :
DATE COLLECTED : 920[illegible] TIME COLLECTED : 1300 SAMPLING PROGRAM : 28

COLLECTED BY : CLS DELIVERED BY : CMS
COMMENTS : CORE-SEDIMENT ORGANICS
FUNDING CODE : WPUC AGENCY ROUTING : 01 UNIT CODE :
SAM TYPE CODE : ISED SAMPLE PURPOSE CODE : 5 REPORTING INDICATOR : S

DATE RECEIVED : 920617 TIME RECEIVED : 0935 RECEIVED BY : M E
LAB OBSERVATIONS : 1-902 SEDIMENT TRIP BL SAM# :
SUPERVISORS INITIALS : JTM NOTE : K = LESS THAN VALUE

P39516	TOTAL PCBS	UG/KG	: 13
P39333	ALDRIN	UG/KG	: 1.0K
P39383	DIELDRIN	UG/KG	: 1.0K
P39359	TOTAL DDT	UG/KG	: 10K
P39329	O,P'-DDE	UG/KG	: 1.0K
P39321	P,P'-DDE	UG/KG	: 1.0K
P39315	O,P'-DDD	UG/KG	: 1.0K
P39311	P,P'-DDD	UG/KG	: 1.0K
P39305	O,P'-DDT	UG/KG	: 1.0K
P39301	P,P'-DDT	UG/KG	: 1.0K
P39351	TOTAL CHLORDANE	UG/KG	: 5.0K
P39004	CHLORDANE,CIS ISOMER	UG/KG	: 2.0K
P39007	CHLORDANE,TRANS ISOMER	UG/KG	: 2.0K
P39393	ENDRIN	UG/KG	: 1.0K
P39401	METHOXYCHLOR	UG/KG	: 5.0K
P39075	ALPHA-BHC	UG/KG	: 1.0K
P39345	GAMMA-BHC (LINDANE)	UG/KG	: 1.0K
P39701	HEXACHLOROBENZENE	UG/KG	: 1.0K
P39413	HEPTACHLOR	UG/KG	: 1.0K
P39423	HEPTACHLOR EPOXIDE	UG/KG	: 1.0K

10/30/92

ILLINOIS ENVIRONMENTAL PROTECTION AGENCY

SAMPLE NUMBER : D218732
SAMPLING POINT DESC. : LAKE MICHIGAN/INTK 62 SE WTR TNK 5 PIER

SUBMITTING SOURCE # : [illegible] SITE # :
DATE COLLECTED : 920624 TIME COLLECTED : 1335 SAMPLING PROGRAM : 2C

COLLECTED BY : CLS DELIVERED BY : CMS
COMMENTS : CORE-SEDIMENT ORGANICS
FUNDING CODE : APOC AGENCY ROUTING : 01 UNIT CODE :
SAM TYPE CODE : ISEC SAMPLE PURPOSE CODE : 5 REPORTING INDICATOR : E

DATE RECEIVED : 920917 TIME RECEIVED : 0935 RECEIVED BY : M E
LAB OBSERVATIONS : 1-60Z SEDIMENT TRIP BL SAM# :
SUPERVISORS INITIALS : JTH NOTE : K = LESS THAN VALUE

P39391	TOTAL PCBS	UG/KG : 10K
P39333	ALDRIN	UG/KG : 1.0K
P39383	DIELDRIN	UG/KG : 1.0K
P39359	TOTAL DDT	UG/KG : 10K
P39320	O,P'-DDE	UG/KG : 1.0K
P39321	P,P'-DDE	UG/KG : 1.0K
P39310	O,P'-DDD	UG/KG : 1.0K
P39311	P,P'-DDD	UG/KG : 1.0K
P39300	O,P'-DDT	UG/KG : 1.0K
P39301	P,P'-DDT	UG/KG : 1.0K
9351	TOTAL CHLORDANE	UG/KG : 5.0K
P39004	CHLORDANE,CIS ISOMER	UG/KG : 2.0K
P39007	CHLORDANE,TRANS ISOMER	UG/KG : 2.0K
P39393	ENDRIN	UG/KG : 1.0K
P39481	METHOXYCHLOR	UG/KG : 5.0K
P39076	ALPHA-BHC	UG/KG : 1.0K
P39340	GAMMA-BHC (LINDANE)	UG/KG : 1.0K
P39701	HEXACHLOROBENZENE	UG/KG : 1.0K
P39413	HEPTACHLOR	UG/KG : 1.0K
P39423	HEPTACHLOR EPOXIDE	UG/KG : 1.0K

CRC 10/30/92

ILLINOIS ENVIRONMENTAL PROTECTION AGENCY

SAMPLE NUMBER : B208978
SAMPLING POINT DESC. : RIVER TANK 15' FROM CHANNEL WALL - WWTP

SUBMITTING SOURCE # : 025 02 SITE # :
DATE COLLECTED : 920424 TIME COLLECTED : 1410 SAMPLING PROGRAM : 28

COLLECTED BY : CLB DELIVERED BY : UPS
COMMENTS :
FUNDING CODE : WP06 AGENCY ROUTING : 01 UNIT CODE :
SAM TYPE CODE : ISED SAMPLE PURPOSE CODE : 5 REPORTING INDICATOR : S

DATE RECEIVED : 920616 TIME RECEIVED : 0900 RECEIVED BY : MAD
LAB OBSERVATIONS : TRIP BL SAM# :
SUPERVISORS INITIALS : RPF NOTE : K = LESS THAN VALUE

P00668	PHOSPHORUS-P,SED.	MG/KG	: 359
P00339	COD,SEDIMENT	MG/KG	: 59950
P00627	KJELDAHL-N, SED.	MG/KG	: 1140
P70322	SOLIDS,VOL SED.	%	: 4.2
P01003	ARSENIC,SEDIMENT	MG/KG	: 20.0
P71921	MERCURY,SEDIMENT	MG/KG	: 0.24
P00938	POTASSIUM,SED.	MG/KG	: 1200
P01008	BARIUM,SEDIMENT	MG/KG	: 28
P01028	CADMIUM,SEDIMENT	MG/KG	: 4
P01029	CHROMIUM,SEDIMENT	MG/KG	: 35
P01043	COPPER,SEDIMENT	MG/KG	: 43
P01170	IRON,SEDIMENT	MG/KG	: 12000
P01052	LEAD,SEDIMENT	MG/KG	: 58
P01053	MANGANESE,SEDMT.	MG/KG	: 392
P01068	NICKEL,SEDIMENT	MG/KG	: 18
P01078	SILVER,SEDIMENT	MG/KG	: 1K
P01093	ZINC,SEDIMENT	MG/KG	: 135

ILLINOIS ENVIRONMENTAL PROTECTION AGENCY

SAMPLE NUMBER : 8209979
SAMPLING POINT DESC. : EMER INTAKE 15' FROM CHAN WALL E WWTP

SUBMITTING SOURCE # : BIS 02 SITE # :
DATE COLLECTED : 920424 TIME COLLECTED : 1416 SAMPLING PROGRAM : 28

COLLECTED BY : CLB DELIVERED BY : UPS
COMMENTS :
FUNDING CODE : WP06 AGENCY ROUTING : 01 UNIT CODE :
SAM TYPE CODE : ISED SAMPLE PURPOSE CODE : 5 REPORTING INDICATOR : 9

DATE RECEIVED : 920616 TIME RECEIVED : 0900 RECEIVED BY : MAD
LAB OBSERVATIONS : TRIP BL SAM# :
SUPERVISORS INITIALS : RPF NOTE : K = LESS THAN VALUE

P00668	PHOSPHORUS-P,SED.	MG/KG	330
P00339	COD,SEDIMENT	MG/KG	56200
P00627	KJELDAHL-N, SED.	MG/KG	1470
P70322	SOLIDS,VOL SED.	%	4.3
P01003	ARSENIC,SEDIMENT	MG/KG	18.1
P71921	MERCURY,SEDIMENT	MG/KG	0.23
P00938	POTASSIUM,SED.	MG/KG	1100
P01008	BARIUM,SEDIMENT	MG/KG	28
P01028	CADMIUM,SEDIMENT	MG/KG	3
P01029	CHROMIUM,SEDIMENT	MG/KG	31
P01043	COPPER,SEDIMENT	MG/KG	41
P01170	IRON,SEDIMENT	MG/KG	12000
P01052	LEAD,SEDIMENT	MG/KG	52
P01053	MANGANESE,SEDMT.	MG/KG	407
P01068	NICKEL,SEDIMENT	MG/KG	19
P01078	SILVER,SEDIMENT	MG/KG	1K
P01093	ZINC,SEDIMENT	MG/KG	131

ILLINOIS ENVIRONMENTAL PROTECTION AGENCY

SAMPLE NUMBER : 8208980
SAMPLING POINT DESC. : INTAKE 1 125' S / 100' E OF PIER

SUBMITTING SOURCE # : Q 05 SITE # :
DATE COLLECTED : 920424 TIME COLLECTED : 1301 SAMPLING PROGRAM : 28

COLLECTED BY : CLB DELIVERED BY : UPS
COMMENTS :
FUNDING CODE : WP06 AGENCY ROUTING : 01 UNIT CODE :
SAM TYPE CODE : ISED SAMPLE PURPOSE CODE : 5 REPORTING INDICATOR : B

DATE RECEIVED : 920616 TIME RECEIVED : 0900 RECEIVED BY : MAD
LAB OBSERVATIONS : TRIP BL SAM# :
SUPERVISORS INITIALS : RPF NOTE : K = LESS THAN VALUE

P00668	PHOSPHORUS-P,SED.	MG/KG	: 187
P00339	COD,SEDIMENT	MG/KG	: 2900
P00627	KJELDAHL-N, SED.	MG/KG	: 89
P70322	SOLIDS,VOL SED.	%	: 1.3
P01003	ARSENIC,SEDIMENT	MG/KG	: 2.1
P71921	MERCURY,SEDIMENT	MG/KG	: 0.1K
P00938	POTASSIUM,SED.	MG/KG	: 1000K
P01008	BARIUM,SEDIMENT	MG/KG	: 9
P01028	CADMIUM,SEDIMENT	MG/KG	: 1K
P01029	CHROMIUM,SEDIMENT	MG/KG	: 5
P01043	COPPER,SEDIMENT	MG/KG	: 3
P01170	IRON,SEDIMENT	MG/KG	: 4500
P01052	LEAD,SEDIMENT	MG/KG	: 10K
P01053	MANGANESE,SEDMT.	MG/KG	: 183
P01068	NICKEL,SEDIMENT	MG/KG	: 9
P01078	SILVER,SEDIMENT	MG/KG	: 1K
P01093	ZINC,SEDIMENT	MG/KG	: 45

ILLINOIS ENVIRONMENTAL PROTECTION AGENCY

SAMPLE NUMBER : B209581
SAMPLING POINT DESC. : INTAKE 1 125' S & 100' E OF PIER

SUBMITTING SOURCE # : G 05 SITE # :
DATE COLLECTED : 920424 TIME COLLECTED : 1306 SAMPLING PROGRAM : 28

COLLECTED BY : CLB DELIVERED BY : UPS
COMMENTS :
FUNDING CODE : WP06 AGENCY ROUTING : C1 UNIT CODE :
SAM TYPE CODE : ISED SAMPLE PURPOSE CODE : S REPORTING INDICATOR : S

DATE RECEIVED : 920616 TIME RECEIVED : 0900 RECEIVED BY : MAD
LAB OBSERVATIONS : TRIP BL SAM# :
SUPERVISORS INITIALS : RPF NOTE : K = LESS THAN VALUE

P00668	PHOSPHORUS-P,SED.	MG/KG	: 281
P00339	COD,SEDIMENT	MG/KG	: 4800
P00627	KJELDAHL-N, SED.	MG/KG	: 105
P70322	SOLIDS,VOL SED.	%	: 1.6
P01003	ARSENIC,SEDIMENT	MG/KG	: 2.2
P71921	MERCURY,SEDIMENT	MG/KG	: 0.1K
P00938	POTASSIUM,SED.	MG/KG	: 1000K
P01008	BARIUM,SEDIMENT	MG/KG	: 9
P01028	CADMIUM,SEDIMENT	MG/KG	: 1K
P01029	CHROMIUM,SEDIMENT	MG/KG	: 5
P01043	COPPER,SEDIMENT	MG/KG	: 3
P01170	IRON,SEDIMENT	MG/KG	: 4700
P01052	LEAD,SEDIMENT	MG/KG	: 10K
P01053	MANGANESE,SEDMT.	MG/KG	: 196
P01068	NICKEL,SEDIMENT	MG/KG	: 9
P01078	SILVER,SEDIMENT	MG/KG	: 1K
P01093	ZINC,SEDIMENT	MG/KG	: 51

ILLINOIS ENVIRONMENTAL PROTECTION AGENCY

SAMPLE NUMBER : 2209932
SAMPLING POINT DESC. : INTAKE 2 @244' SE FROM M2C TANK 3 PIER

SUBMITTING SOURCE # : C 04 SITE # :
DATE COLLECTED : 920424 TIME COLLECTED : 1335 SAMPLING PROGRAM : 28

COLLECTED BY : CLS DELIVERED BY : UPS
COMMENTS :
FUNDING CODE : WP06 AGENCY ROUTING : 01 UNIT CODE :
SAM TYPE CODE : ISED SAMPLE PURPOSE CODE : 5 REPORTING INDICATOR : S

DATE RECEIVED : 920616 TIME RECEIVED : 0900 RECEIVED BY : MAD
LAB OBSERVATIONS : TRIP BL SAM# :
SUPERVISORS INITIALS : RPF NOTE : K = LESS THAN VALUE

P00665	PHOSPHORUS-P,SED.	MG/KG	: 143
P00339	COD,SEDIMENT	MG/KG	: 5900
P00627	KJELDAHL-N, SED.	MG/KG	: 319
P70322	SOLIDS,VOL SED.	%	: 2.0
P01003	ARSENIC,SEDIMENT	MG/KG	: 6.1
P71921	MERCURY,SEDIMENT	MG/KG	: 0.1K
P00938	POTASSIUM,SED.	MG/KG	: 1000K
P01008	BARIUM,SEDIMENT	MG/KG	: 10
P01028	CADMIUM,SEDIMENT	MG/KG	: 1K
P01029	CHROMIUM,SEDIMENT	MG/KG	: 6
P01043	COPPER,SEDIMENT	MG/KG	: 7
P01170	IRON,SEDIMENT	MG/KG	: 6800
P01052	LEAD,SEDIMENT	MG/KG	: 10K
P01053	MANGANESE,SEDMT.	MG/KG	: 240
P01068	NICKEL,SEDIMENT	MG/KG	: 7
P01078	SILVER,SEDIMENT	MG/KG	: 1K
P01093	ZINC,SEDIMENT	MG/KG	: 38

Hey a
Waukega
(Sediment and

Figure 13. Water and Sediment Sampling Locations for Sampling Conducted for the Waukegan RAP on November 14, 1990. Samples were collected and analyzed by the IEPA.

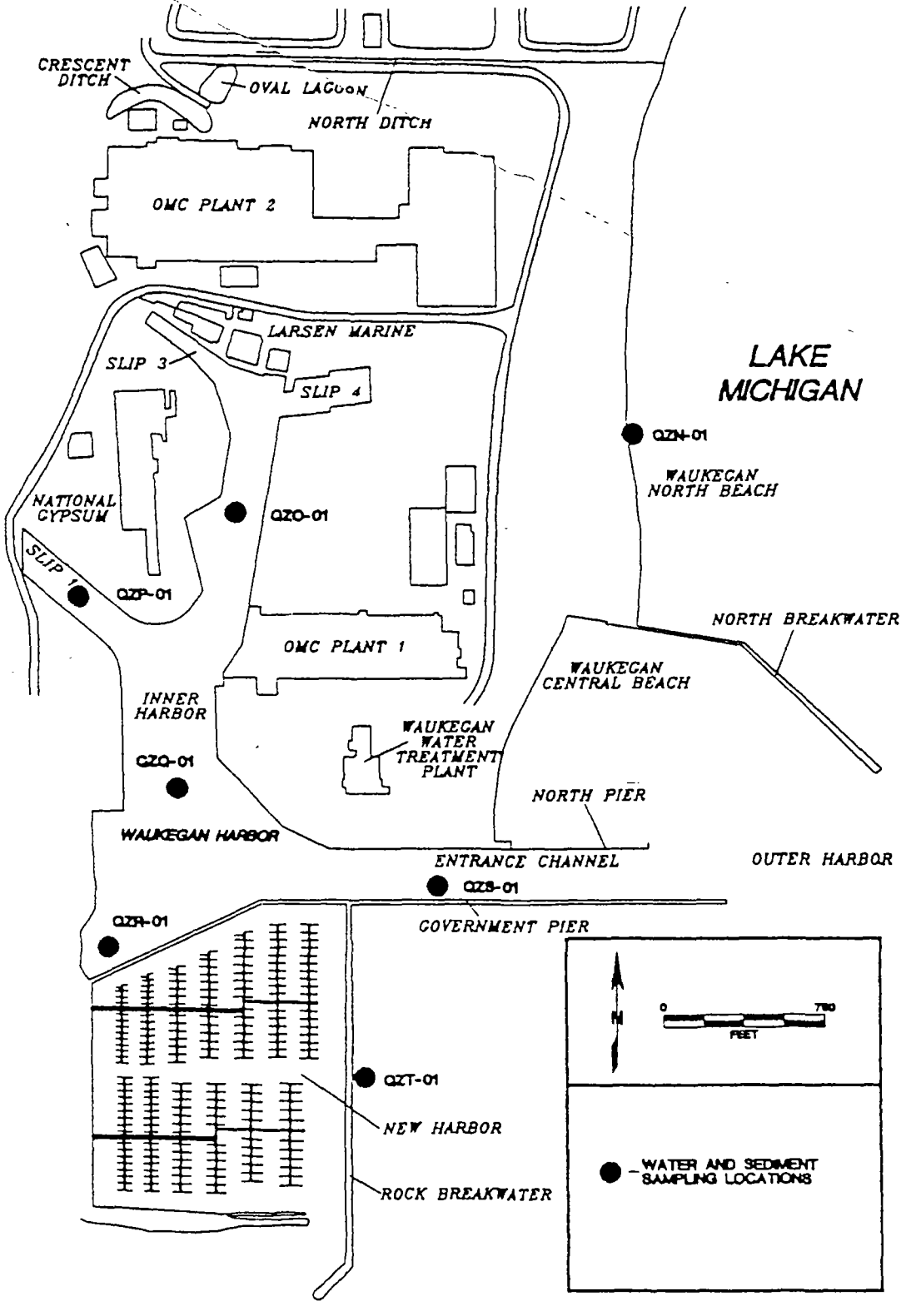

Table 4.6. Water Quality in the Waukegan Harbor Area, November 14, 1990. Concentrations are in parts per million unless otherwise noted. Samples were collected and analyzed by the Illinois EPA.

Parameter	Standard	North Beach QZN01	Upper Harbor QZO01	Slip No. 1 QZP01	Central Harbor QZQ01	Boat Ramp QZR01	Harbor Channel QZS01	New Harbor QZT01
Water Temperature (C)	--	7.7	7.4	7.3	7.3	6.4	6.8	6.5
pH (units)	7.0 - 9.0 a	7.8	6.7 *	6.6 *	6.7 *	7.0	7.1	7.4
Dissolved Oxygen	5.0 c	11.2	5.9	6.0	6.6	8.7	9.4	10.0
DO Percent Saturation	90 a	96.6	50.9 *	51.7 *	56.9 *	73.1 *	79.7 *	84.0 *
Conductivity (uS/cm) #	300 a	265	349 *	347 *	339 *	339 *	304 *	306 *
Total Phosphorus	0.007 a	0.023 *	0.020 *	0.020 *	0.019 *	0.017 *	0.019 *	0.011 *
Total Ammonia	0.02 a	0.04 *	0.82 *	0.62 *	0.52 *	0.29 *	0.22 *	0.09 *
Un-ionized Ammonia @	0.04 c	0.000	0.001	0.000	0.000	0.000	0.000	0.000
Total Kjeldahl Nitrogen	--	0.3	1.1	0.9	0.8	0.5	0.4	0.3
Nitrite + Nitrate	--	0.26	0.29	0.30	0.30	0.31	0.29	0.31
COD	--	23	16	14	14	12	13	11
Turbidity (NTU)	--	22	8.4	9.1	9.1	7.3	16.4	9.5
Total Suspended Solids	--	34	5	4	6	8	18	6
Volatile Solids	--	6	2	3	3	3	6	4
Chloride	12 a	11	18 *	18 *	16 *	19 *	11	12
Sulfate	24 a	26 *	32 *	32 *	31 *	32 *	28 *	29 *
Cyanide	0.022 c	0.005 K	0.050 *	0.040 *	0.030 *	0.010	0.010	0.005 K
Fluoride	1.4 c	0.09	0.15	0.15	0.15	0.13	0.11	0.10
Phenols (µg/L)	1.0 b	5 K	43 *	26 *	19 *	5 *	5 K	5 K
Fecal Coliform (No./100mL)	20 a	10	18	20	20	60 *	18	50 K

a Lake Michigan Standard (35 Ill. Admin. Code 302)
b Public Water Supply Standard (35 Ill. Admin. Code 302)
c General Use Standard (35 Ill. Admin. Code 302)
K Less than
* Violated Standard
# Conductivity x 0.6 = TDS (mg/L)
@ Calculated

Table 4.7. Water Concentrations of Metals (total) in the Waukegan Harbor Area, November 14, 1990. Samples were collected and analyzed by the Illinois EPA.

Parameter	Standard	North Beach QZN01	Upper Harbor QZO01	Slip No. 1 QZP01	Central Harbor QZQ01	Boat Ramp QZR01	Harbor Channel QZS01	New Harbor QZT01
Calcium (mg/L)	--	42	45	45	44	45	42	42
Magnesium (mg/L)	--	14	14	14	14	14	14	13
Potassium (mg/L)	--	1.3	2.9	2.7	2.1	2.7	1.2	3.0
Sodium (mg/L)	--	10.0	17.0	17.0	16.0	19.0	12.0	13.0
Hardness (mg/L) c	--	165	169	168	167	170	162	159
Aluminum (µg/L)	--	675	247	312	290	227	494	272
Arsenic (µg/L)	50 a	1 K	7	5	4	2	2	1
Barium (µg/L)	1000 a	25	27	27	27	27	25	24
Beryllium (µg/L)	--	0.5 K	0.5 K	0.5 K	0.5 K	0.5 K	0.5 K	0.5 K
Boron (µg/L)	1000 b	50 K	60	64	54	51	50 K	50 K
Cadmium (µg/L)	10 a	3 K	3 K	3 K	4	3 K	5	3 K
Chromium (µg/L)	50 a	5 K	5 K	5 K	5 K	5 K	5	5 K
Cobalt (µg/L)	--	5 K	5 K	5 K	7	5 K	5 K	5 K
Copper (µg/L)	** b	6	5 K	5	5 K	5 K	5	6
Iron (µg/L)	--	1015	447	486	446	343	691	347
Lead (µg/L)	50 a	50 K	100 K	50 K	100 K	50 K	100 K	50 K
Manganese (µg/L)	150 a	25	42	42	39	22	23	9
Mercury (µg/L)	0.5 b	0.05 K	0.05 K	0.05 K	0.05 K	0.05 K	0.05 K	0.05 K
Nickel (µg/L)	1000 b	5 K	9	5 K	21	10 K	20	5 K
Silver (µg/L)	5 b	5 K	3 K	5 K	3 K	3 K	3 K	5 K
Strontium (µg/L) d	--	129	148	147	145	147	134	134
Vanadium (µg/L)	--	6	5 K	5 K	5 K	5 K	5 K	5 K
Zinc (µg/L)	1000 b	136	50 K	100 K	130	50 K	100 K	50 K

a Public Water Supply Standard (35 Ill. Admin. Code 302)
b General Use Standard (35 Ill. Admin. Code 302)
c Calculated
d Total Metal Concentration
K Less Than
* Violated Standard
** Depends on Hardness; Acute Copper = e[0.9422ln(Hardness)-1.464]

Table 4.8. Comparison of Mean Metals (total) Concentrations in Water from the Waukegan Harbor Area and Lake Michigan, 1990. Samples were collected and analyzed by the IEPA.

Parameter	Standard	Waukegan Harbor Area (1)	Lake Michigan North Shore (2)
Calcium (mg/L)	--	44	36
Magnesium (mg/L)	--	14	11
Potassium (mg/L)	--	2.3	1.0
Sodium (mg/L)	--	14.8	5.6
Hardness (mg/L) 3	--	166	134
Aluminum (ug/L)	--	360	53
Arsenic (ug/L)	50 a	3	1 K
Barium (ug/L)	1000 a	26	20
Beryllium (ug/L)	--	0.5 K	0.5 K
Boron (ug/L)	1000 b	54	50 K
Cadmium (ug/L)	10 a	3 K	3 K
Chromium (ug/L)	50 a	5 K	5 K
Cobalt (ug/L)	--	5 K	5 K
Copper (ug/L)	** b	5	6 K
Iron (ug/L)	--	539	50 K
Lead (ug/L)	50 a	71 K	50 K
Manganese (ug/L)	150 a	29	5 K
Mercury (ug/L)	0.5 b	0.05 K	0.08 K
Nickel (ug/L)	1000 b	11	8 K
Silver (ug/L)	5 b	4 K	3 K
Strontium (ug/L)	--	140	124
Vanadium (ug/L)	--	5 K	5 K
Zinc (ug/L)	1000 b	88 K	50 K

1 Seven stations, November,1990.
2 Five stations (1N, 3N, 5N, 7N, 9N), May & September, 1990.
3 Calculated
a Public Water Supply Standard (35 IL Adm Code 302)
b General Use Standard (35 IL Adm Code 302)
K Less than
* Violated Standard
** Depends on hardness; acute copper = e[0.9422ln(hardness)-1.464].

Table 4.9. Unsieved Sediment Concentrations in the Waukegan Harbor Area, November 14, 1990. Concentrations are in parts per million unless otherwise noted. Samples were collected and analyzed by the IEPA.

Parameter	North Beach QZN01	Upper Harbor QZ001	Slip No. 1 QZP01	Central Harbor QZQ01	Boat Ramp QZR01	Harbor Channel QZS01	New Harbor QZT01
Arsenic	1 N	41 H	13 H	23 H	6 M	10 H	4 M
Barium	9 N	52 M	31 M	43 M	27 M	34 M	22 M
Cadmium	1 K	12 H	7 H	12 H	1 K	1 *	1 K
Chromium	4 N	90 H	47 M	88 H	22 N	34 M	15 N
COD	39200 N	117650 H	77648 M	91000 H	24900 N	62600 M	23600 N
Copper	2 N	160 H	53 H	86 H	26 M	50 M	30 M
Cyanide	0.52 K	1.2 K	2.4 K	3.3 K	0.65 K	0.87 K	9.3 H
Iron	3200 N	26000 H	14000 N	20000 M	9000 N	18000 M	12000 N
Kjeldahl Nitrogen	60 K	2500 H	900 N	1700 M	175 N	175 N	450 N
Lead	10 K	140 H	12000 H	120 H	39 N	60 M	10000 H
Manganese	96 N	460 M	91 N	450 M	220 N	480 M	24 N
Mercury	0.1 K	0.40 N	0.19 N	0.34 N	0.1 K	0.13 N	0.1 K
Nickel	5 K	26 M	340 H	21 M	9 N	16 N	400 H
Phosphorus	329 N	826 H	350 N	545 M	202 N	428 M	510 M
Potassium	1000 K	1900	1000	1500	1000 K	1300	1000
Silver	1 K	1 K	13	1 K	1 K	1 K	10
Volatile Solids (%)	2.3 N	9.8 H	7.3 M	8.3 H	4.2 N	4.8 N	2.2 N
Zinc	20 N	280 H	15 N	210 H	100 M	130 M	15 N

Sediment Classifications (USEPA, 1977)
K = Less Than
N = Nonpolluted
M = Moderately Polluted
H = Heavily Polluted
* = Lower limits not established

Table 4.10. Unsieved Sediment Concentrations of Organic Compounds Detected[1] in the Waukegan Harbor Area, November 14, 1990. Concentrations are in parts per million. Samples were collected and analyzed by the IEPA.

Parameter	North Beach QZN01	Upper Harbor QZO01	Slip No. 1 QZP01	Central Harbor QZQ01	Boat Ramp QZR01	Harbor Channel QZS01	New Harbor QZT01
PCBs	0.010 K	9.000 M	4.600 M	1.900 M	0.200 N	0.260 N	0.037 N
4-Methylphenol	0.5 K	0.5 K	0.5 K	0.62	0.5 K	0.5 K	0.5 K
Bis(2-Ethylhexyl)Phthalate	0.5 K	0.69	0.5 K	0.5 K	0.5 K	1.1	0.5 K
Fluoranthene	0.5 K	0.5 K	0.62	0.5 K	0.66	0.5 K	0.5 K
Pyrene	0.5 K	0.58	0.65	0.5 K	0.63	0.5 K	0.5 K
Aliphatic Hydrocarbon **	ND	70 *	24 *	18 *	1.6 *	1.8 *	ND
Aliphatic Ketone **	ND	ND	ND	ND	0.55 *	ND	ND
C3-Substituted Benzene	ND	0.95 *	ND	ND	ND	ND	ND
C4-Substituted Benzene	ND	6.1 *	3.0 *	1.0 *	ND	ND	ND
C5-Substituted Benzene	ND	2.8 *	1.8 *	ND	ND	ND	ND
Dimethyl Naphthalene #	ND	ND	0.78 *	ND	ND	ND	ND
Methyl Naphthalene #	ND	ND	0.71 *	ND	ND	ND	ND
Ethyl-Dimethyl-Pentane #	ND	1.5 *	ND	ND	ND	ND	ND
Methyl Pentane #	ND	0.60 *	0.59 *	ND	ND	ND	ND
Tetramethyl Pentane #	ND	15 *	7.2 *	ND	ND	ND	ND
Other Organic Compounds **	2.8	16 *	9.1 *	6.9 *	0.63 *	1.3 *	9.6 *

* Approximate Quantitations
** Could not be identified
# Tentatively Identified
K = Less Than
ND = Not Detected

Classification Guidelines (USEPA, 1977)
N = Nonpolluted
M = Moderately Polluted
H = Heavily Polluted

(1) A priority pollutant scan was done for 90 organic compounds, see Appendix 2 for complete list.

Table 4.11. Comparison of Mean Concentrations of Various Parameters in Unsieved Sediments from the Illinois Area of Lake Michigan. Concentrations are in parts per million unless otherwise noted.

Parameter	Waukegan Harbor Area (1)	Waukegan Harbor (2)	Great Lakes Naval Training Center Harbor (3)	Wilmette Harbor (3)	Chicago Harbor (4)	Calumet Harbor (5)	Lake Calumet (6)	Indiana Harbor (7)	Lake Michigan (8)
Volatile Solids (%)	5.6 M	--	4.4 N	4.6 N	4.3 N	8.8 H	--	3.6 N	2.3 N
Kjeldahl Nitrogen	851 N	--	951 N	1060 M	760 N	872 N	--	946 N	592 N
Phosphorus	456 M	--	368 N	229 N	217 N	205 N	20.0 N	478 M	291 N
COD	62371 M	--	46000 M	48850 M	53333 M	72500 M	--	98000 H	47000 M
Arsenic	14 H	--	8 M	6 M	3.6 M	4.7 M	29.8 M	20 H	7.4 M
Barium	31 M	283 H	--	--	--	--	--	--	--
Cadmium	5.0 *	8.0 H	1.2 *	0.4 *	3.0 *	3.0 *	1.8 *	0.5 K	0.5 K
Chromium	43 M	5 N	23 N	13 N	28 M	41 M	76.7 H	58 M	12 N
Copper	58 H	104 H	87 H	30 M	35 M	38 M	57.5 H	110 H	23 N
Lead	3196 H	202 H	134 H	31 N	107 H	132 H	187.0 H	120 H	18 N
Manganese	260 N	531 H	589 H	537 H	490 M	710 H	--	970 H	430 M
Mercury	0.19 N	--	0.32 N	0.18 N	0.34 N	0.38 N	--	0.13 N	0.03 N
Nickel	117 H	18 N	--	--	--	--	23.6 M	--	--
PCBs	2.29 M	2426 H	0.225 N	0.070 N	0.133 N	0.585 N	--	0.400 N	0.017 N

(1) IEPA, 1990, seven samples, includes samples from Waukegan Harbor (except slip no. 3), New Harbor and North Beach.
(2) Metals 23 samples (Risatti et al., 1990); PCBs 18 samples (Ross et al., 1988), (includes samples from slip 3).
(3) Three samples (City of Chicago and IEPA, 1985).
(4) Three samples (Stations 15, 16, 17), (USACOE, 1981).
(5) Four samples (Stations 1, 2, 3, 4), (USACOE, 1981).
(6) Thirty-seven samples (Ross et al., 1988)
(7) One sample (City of Chicago and IEPA, 1981).
(8) Eight samples (Stations 5A, 5H, 5J, 1N, 7N, 2S, 5S, 7S), (City of Chicago and IEPA, 1981).

Sediment Classification (USEPA, 1977)
N = Nonpolluted
M = Moderately Polluted
H = Heavily Polluted
* Lower limits not established

K = Less Than

Table 4.12. Comparison of Lead, Zinc and Cadmium Concentrations in Waukegan Harbor Sediments with Effects Range Levels from Long and Morgan (1990).

	Waukegan Harbor (1) 23 Stations	Waukegan Harbor Area (2) 7 Stations
LEAD (MG/KG)		
Minimum	36	<10
Maximum	420	12000
Mean	202	3196
Number >35 (ER-L)	23	6
Number >110 (ER-M)	18	4
ZINC (MG/KG)		
Minimum	81	15
Maximum	370	280
Mean	214	110
Number >120 (ER-L)	12	3
Number >270 (ER-M)	7	1
CADMIUM (MG/KG)		
Minimum	<1.3	<1.0
Maximum	50.0	12.0
Mean	8.0	5.0
Number >5.0 (ER-L)	7	3
Number >9.0 (ER-M)	4	2

(1) Risatti et al. (1990)
(2) IEPA (1990)

ER-L = Effects Range Low (biological effects 10% of the time).
ER-M = Effects Range Median (biological effects 50% of the time).

APPENDIX D

Water Quality Analysis Data
Sampling of Waukegan Harbor Area, November 1990
Sampling and analysis by the
Illinois Environmental Protection Agency

ILLINOIS ENVIRONMENTAL PROTECTION AGENCY

AMPLE NUMBER : C004841
AMPLING POINT DESC. : NORTH BEACH WAUKEGAN

UBMITTING SOURCE # : LZN C1 SITE # :
ATE COLLECTED : 901114 TIME COLLECTED : 1520 SAMPLING PROGRAM : 2B

OLLECTED BY : HE/CB DELIVERED BY : CB
OMMENTS : NEW STATION
UNDING CODE : WP2C AGENCY ROUTING : C1 UNIT CODE :
AM TYPE CODE : ILWG SAMPLE PURPOSE CODE : REPORTING INDICATOR : S

ATE RECEIVED : 901115 TIME RECEIVED : 1000 RECEIVED BY : LJP
AB OBSERVATIONS : TRIP BL SAMY :
UPERVISORS INITIALS : JWG NOTE : < = LESS THAN VALUE

~~00403~~	~~PH-LABORATORY~~	~~UNITS~~	~~:~~	~~7.5~~	~~00095~~	~~CONDUCTIVITY~~	~~UM/CM : 336~~
00951	FLUORIDE,TOTAL	MG/L	:	0.39	00940	CHLORIDE,TOTAL	MG/L : 11
00945	SULFATE,TOTAL	MG/L	:	28	00630	NITRATE&NO2-NTOTAL	MG/L : 0.26
00610	AMMONIA-N,TOTAL	MG/L	:	0.04	32730	PHENOLS,TOTAL	UG/L : 5K
00665	PHOSPHORUS-P,TOTAL	MG/L	:	0.023	00720	CYANIDE,TOTAL	MG/L : 0.005K
00335	COD,TOTAL	MG/L	:	23	00530	SOLIDS,TOT.SUS.	MG/L : 34
35	SOLIDS,VOLATILE	MG/L	:	5	00625	KJELDAHL-N,TOTAL	MG/L : 0.3
556	OIL,GRAVIMETRIC	MG/L	:	12	00070	TURBIDITY	NTU : 22
31616	FECAL COLI/100ML	-	:	100	01002	ARSENIC,TOTAL	UG/L : 1K
71900	MERCURY,TOTAL	UG/L	:	0.05K	00916	CALCIUM,TOTAL	MG/L : 42
00927	MAGNESIUM,TOTAL	MG/L	:	14	00929	SODIUM,TOTAL	MG/L : 10
00937	POTASSIUM,TOTAL	MG/L	:	1.3	01105	ALUMINUM,TOTAL	UG/L : 675
01007	BARIUM,TOTAL	UG/L	:	25	01022	BORON,TOTAL	UG/L : 50K
01012	BERYLLIUM,TOTAL	UG/L	:	0.5K	01027	CADMIUM,TOTAL	UG/L : 3K
01034	CHROMIUM,TOTAL	UG/L	:	5K	01042	COPPER,TOTAL	UG/L : 4
01037	COBALT,TOTAL	UG/L	:	5K	01045	IRON,TOTAL	UG/L : 1015
01051	LEAD,TOTAL	UG/L	:	30K	01055	MANGANESE,TOTAL	UG/L : 25
01067	NICKEL,TOTAL	UG/L	:	5K	01077	SILVER,TOTAL	UG/L : 5K
01082	STRONTIUM,TOTAL	UG/L	:	129	01087	VANADIUM,TOTAL	UG/L : 5
01092	ZINC,TOTAL	UG/L	:	136	00900	HARDNESS CALC.	MG/L : 165C
00020	TEMPERATURE,AIR	DEG.C	:	4.0	00010	TEMPERATURE,WATER	DEG.C : 7.7
00299	OXYGEN,DISS.-FIELD	MG/L	:	11.0	00094	COND.(EC)FIELD	UM/CM : 365
00400	PH,FIELD	UNITS	:	7.5			

ILLINOIS ENVIRONMENTAL PROTECTION AGENCY

PLE NUMBER : C0C4845
PLING POINT DESC. : WAUKEGAN HARBOR SLIP NO. 1

SUBMITTING SOURCE # : CZP 01 SITE # :
DATE COLLECTED : 901114 TIME COLLECTED : 1145 SAMPLING PROGRAM : RR

COLLECTED BY : ME/CE DELIVERED BY : CE
COMMENTS : NEW STATION
FUNDING CODE : WP2C AGENCY ROUTING : 01 UNIT CODE :
SAM TYPE CODE : ILWQ SAMPLE PURPOSE CODE : 1 REPORTING INDICATOR : R

DATE RECEIVED : 901115 TIME RECEIVED : 1000 RECEIVED BY : LJP
LAB OBSERVATIONS : TRIP BL SAMP :
SUPERVISORS INITIALS : JWC NOTE : < = LESS THAN VALUE

P00403	PH-LABORATORY	UNITS	[illegible]	P00095	CONDUCTIVITY	UM/CM	[illegible]
P00951	FLUORIDE,TOTAL	MG/L	0.15	P00940	CHLORIDE,TOTAL	MG/L	43
P00945	SULFATE,TOTAL	MG/L	32	P00630	NITRATE&NO2-NTOTAL	MG/L	0.30
P00610	AMMONIA-N,TOTAL	MG/L	0.62	P32730	PHENOLS,TOTAL	UG/L	26
P00665	PHOSPHORUS-P,TOTAL	MG/L	0.020	P00720	CYANIDE,TOTAL	MG/L	0.04
P00335	COD,TOTAL	MG/L	14	P00530	SOLIDS,TOT.SUS.	MG/L	4
P00535	SOLIDS,VOLATILE	MG/L	5	P00625	KJELDAHL-N,TOTAL	MG/L	0.9
P00556	OIL,GRAVIMETRIC	MG/L	2	P00070	TURBIDITY	NTU	9.1
P31616	FECAL COLI/100ML	#	200	P01002	ARSENIC,TOTAL	UG/L	5
71900	MERCURY,TOTAL	UG/L	0.05K	P00916	CALCIUM,TOTAL	MG/L	45
00927	MAGNESIUM,TOTAL	MG/L	14	P00929	SODIUM,TOTAL	MG/L	17
00937	POTASSIUM,TOTAL	MG/L	1.7	P01105	ALUMINUM,TOTAL	UG/L	312
P01007	BARIUM,TOTAL	UG/L	37	P01022	BORON,TOTAL	UG/L	94
P01012	BERYLLIUM,TOTAL	UG/L	0.5K	P01027	CADMIUM,TOTAL	UG/L	2K
P01034	CHROMIUM,TOTAL	UG/L	5K	P01042	COPPER,TOTAL	UG/L	5
P01037	COBALT,TOTAL	UG/L	5K	P01045	IRON,TOTAL	UG/L	485
P01051	LEAD,TOTAL	UG/L	50K	P01055	MANGANESE,TOTAL	UG/L	42
P01067	NICKEL,TOTAL	UG/L	5K	P01077	SILVER,TOTAL	UG/L	5K
P01082	STRONTIUM,TOTAL	UG/L	147	P01087	VANADIUM,TOTAL	UG/L	5K
P01092	ZINC,TOTAL	UG/L	100K	P00900	HARDNESS CALC.	MG/L	165C
P00020	TEMPERATURE,AIR	DEG.C	12	P00010	TEMPERATURE,WATER	DEG.C	7.3
P00299	OXYGEN,DISS.-FIELD	MG/L	9.0	P00094	COND.(EC)FIELD	UM/CM	747
P00400	PH,FIELD	UNITS	8.0				

ILLINOIS ENVIRONMENTAL PROTECTION AGENCY

AMPLE NUMBER : CO04842
AMPLING POINT DESC. : WAUKEGAN HARBOR UPPER HARBOR

UBMITTING SOURCE # : QZC 01 SITE # :
ATE COLLECTED : 901114 TIME COLLECTED : 1010 SAMPLING PROGRAM : 28

OLLECTED BY : HE/CB DELIVERED BY : CB
OMMENTS : NEW STATION
UNDING CODE : 4P20 AGENCY ROUTING : 01 UNIT CODE :
AM TYPE CODE : ILWQ SAMPLE PURPOSE CODE : 1 REPORTING INDICATOR : 3

ATE RECEIVED : 901115 TIME RECEIVED : 1000 RECEIVED BY : LJP
AB OBSERVATIONS : TRIP BL SAMP :
UPERVISORS INITIALS : JWP NOTE : K = LESS THAN VALUE

00403	PH-LABORATORY	UNITS	7.4	P00095	SP.CONDUCTIVITY	UM/CM	340
00951	FLUORIDE,TOTAL	MG/L	0.15	P00940	CHLORIDE,TOTAL	MG/L	18
00945	SULFATE,TOTAL	MG/L	32	P00630	NITRATE+NO2-N TOTAL	MG/L	0.29
00610	AMMONIA-N,TOTAL	MG/L	0.32	P32730	PHENOLS,TOTAL	UG/L	43
00665	PHOSPHORUS-P,TOTAL	MG/L	0.021	P00720	CYANIDE,TOTAL	MG/L	0.05
00335	COD,TOTAL	MG/L	16	P00530	SOLIDS,TOT.SUS.	MG/L	5
00535	SOLIDS,VOLATILE	MG/L	2	P00625	KJELDAHL-N,TOTAL	MG/L	1.1
00556	OIL,GRAVIMETRIC	MG/L	1K	P00076	TURBIDITY	NTU	8.4
31616	FECAL COLI/100ML		136	P01002	ARSENIC,TOTAL	UG/L	7
71900	MERCURY,TOTAL	UG/L	0.05K	P00916	CALCIUM,TOTAL	MG/L	45
00927	MAGNESIUM,TOTAL	MG/L	14	P00929	SODIUM,TOTAL	MG/L	17
00937	POTASSIUM,TOTAL	MG/L	2.9	P01105	ALUMINUM,TOTAL	UG/L	247
01007	ARIUM,TOTAL	UG/L	27	P01022	BORON,TOTAL	UG/L	60
01012	BERYLLIUM,TOTAL	UG/L	3.5K	P01027	CADMIUM,TOTAL	UG/L	3K
01034	CHROMIUM,TOTAL	UG/L	5K	P01042	COPPER,TOTAL	UG/L	5K
01037	COBALT,TOTAL	UG/L	5K	P01045	IRON,TOTAL	UG/L	447
01051	LEAD,TOTAL	UG/L	100K	P01055	MANGANESE,TOTAL	UG/L	42
01067	NICKEL,TOTAL	UG/L		P01077	SILVER,TOTAL	UG/L	3K
01082	STRONTIUM,TOTAL	UG/L	143	P01087	VANADIUM,TOTAL	UG/L	5K
01092	ZINC,TOTAL	UG/L	50K	P00900	HARDNESS CALC.	MG/L	169C
00020	TEMPERATURE,AIR	DEG.C	12	P00010	TEMPERATURE,WATER	DEG.C	7.4
00299	OXYGEN,DISS.-FIELD	MG/L	5.9	P00094	CONC.(EC)FIELD	UM/CM	340
00400	PH,FIELD	UNITS	5.7				

ILLINOIS ENVIRONMENTAL PROTECTION AGENCY

E NUMBER : C004844
ING POINT DESC. : WAUKEGAN HARBOR CENTRAL

MITTING SOURCE # : 020 01 SITE # :
E COLLECTED : 901114 TIME COLLECTED : 1115 SAMPLING PROGRAM : PB

LECTED BY : HE/CB DELIVERED BY : C1
MENTS : NEW STATION
OING CODE : WP20 AGENCY ROUTING : 01 UNIT CODE :
TYPE CODE : ILWQ SAMPLE PURPOSE CODE : 1 REPORTING INDICATOR : S

TE RECEIVED : 901115 TIME RECEIVED : 1000 RECEIVED BY : LJP
OBSERVATIONS : TRIP BL DAM# :
ERVISORS INITIALS : JWD NOTE : K = LESS THAN VALUE

~~0403 PH-LABORATORY UNITS : 7.2 P00095 CONDUCTIVITY UM/CM : 341~~
0951 FLUORIDE,TOTAL MG/L : 0.15 P00940 CHLORIDE,TOTAL MG/L : 16
0945 SULFATE,TOTAL MG/L : 21 P00630 NITRATE&NO2-NTOTAL MG/L : 0.30
0610 AMMONIA-N,TOTAL MG/L : 0.52 P32730 PHENOLS,TOTAL UG/L : 10

0665 PHOSPHORUS-P,TOTAL MG/L : 0.019 P00720 CYANIDE,TOTAL MG/L : 0.02
0335 COD,TOTAL MG/L : 14 P00530 SOLIDS,TOT.SUS. MG/L : 5
0535 SOLIDS,VOLATILE MG/L : 5 P00625 KJELDAHL-N,TOTAL MG/L : 0.8
0556 OIL,GRAVIMETRIC MG/L : 1K P00076 TURBIDITY NTU : 9.1

6 FECAL COLI/100ML # : 208 P01002 ARSENIC,TOTAL UG/L : 4
MERCURY,TOTAL UG/L : 0.05K P00916 CALCIUM,TOTAL MG/L : 44
AGNESIUM,TOTAL MG/L : 14 P00929 SODIUM,TOTAL MG/L : 16
0937 POTASSIUM,TOTAL MG/L : 2.1 P01105 ALUMINUM,TOTAL UG/L : 290

1007 BARIUM,TOTAL UG/L : 37 P01022 BORON,TOTAL UG/L : 54
1012 BERYLLIUM,TOTAL UG/L : 0.5K P01027 CADMIUM,TOTAL UG/L : 4
1034 CHROMIUM,TOTAL UG/L : 5K P01042 COPPER,TOTAL UG/L : 5K
1037 COBALT,TOTAL UG/L : 7 P01045 IRON,TOTAL UG/L : 446

1051 LEAD,TOTAL UG/L : 100K P01055 MANGANESE,TOTAL UG/L : 39
1067 NICKEL,TOTAL UG/L : 21 P01077 SILVER,TOTAL UG/L : 2K
1082 STRONTIUM,TOTAL UG/L : 145 P01087 VANADIUM,TOTAL UG/L : 5K
1092 ZINC,TOTAL UG/L : 130 P00900 HARDNESS CALC. MG/L : 167C

0020 TEMPERATURE,AIR DEG.C : 12 P00010 TEMPERATURE,WATER DEG.C : 7.3
0299 OXYGEN,DISS.-FIELD MG/L : 9.2 P00094 COND.(EC)FIELD UM/CM : 339
0400 PH,FIELD UNITS : 7.7

ILLINOIS ENVIRONMENTAL PROTECTION AGENCY

SAMPLE NUMBER : C004843
SAMPLING POINT DESC. : WAUKEGAN HARBOR SLIP NO. 1

SUBMITTING SOURCE # : CZP 01 SITE # :
DATE COLLECTED : 901114 TIME COLLECTED : 1145 SAMPLING PROGRAM : RR

COLLECTED BY : ME/CE DELIVERED BY : CE
COMMENTS : NEW STATION
FUNDING CODE : WP2C AGENCY ROUTING : 01 UNIT CODE :
SAM TYPE CODE : ILWQ SAMPLE PURPOSE CODE : 1 REPORTING INDICATOR : R

DATE RECEIVED : 901115 TIME RECEIVED : 1000 RECEIVED BY : LJP
LAB OBSERVATIONS : TRIP BL SAM# :
SUPERVISORS INITIALS : JWO NOTE : K = LESS THAN VALUE

P00403	PH-LABORATORY	UNITS	7.2	P00095	CONDUCTIVITY	UM/CM	350
P00951	FLUORIDE,TOTAL	MG/L	0.15	P00940	CHLORIDE,TOTAL	MG/L	48
P00945	SULFATE,TOTAL	MG/L	32	P00630	NITRATE&NO2-NTOTAL	MG/L	0.30
P00610	AMMONIA-N,TOTAL	MG/L	0.02	P32730	PHENOLS,TOTAL	UG/L	26
P00665	PHOSPHORUS-P,TOTAL	MG/L	0.020	P00720	CYANIDE,TOTAL	MG/L	0.04
P00335	COD,TOTAL	MG/L	14	P00530	SOLIDS,TOT.SUS.	MG/L	4
P00535	SOLIDS,VOLATILE	MG/L	5	P00625	KJELDAHL-N,TOTAL	MG/L	0.9
P00556	OIL,GRAVIMETRIC	MG/L	2	P00076	TURBIDITY	NTU	9.1
P31616	FECAL COLI/100ML	#	200	P01002	ARSENIC,TOTAL	UG/L	5
71900	MERCURY,TOTAL	UG/L	0.05K	P00916	CALCIUM,TOTAL	MG/L	45
00927	MAGNESIUM,TOTAL	MG/L	14	P00929	SODIUM,TOTAL	MG/L	17
00937	POTASSIUM,TOTAL	MG/L	1.7	P01105	ALUMINUM,TOTAL	UG/L	312
P01007	BARIUM,TOTAL	UG/L	37	P01022	BORON,TOTAL	UG/L	64
P01012	BERYLLIUM,TOTAL	UG/L	0.5K	P01027	CADMIUM,TOTAL	UG/L	3K
P01034	CHROMIUM,TOTAL	UG/L	5K	P01042	COPPER,TOTAL	UG/L	5
P01037	COBALT,TOTAL	UG/L	3K	P01045	IRON,TOTAL	UG/L	485
P01051	LEAD,TOTAL	UG/L	30K	P01055	MANGANESE,TOTAL	UG/L	42
P01067	NICKEL,TOTAL	UG/L	5K	P01077	SILVER,TOTAL	UG/L	5K
P01082	STRONTIUM,TOTAL	UG/L	147	P01087	VANADIUM,TOTAL	UG/L	5K
P01092	ZINC,TOTAL	UG/L	100K	P00900	HARDNESS CALC.	MG/L	166
P00020	TEMPERATURE,AIR	DEG.C	12	P00010	TEMPERATURE,WATER	DEG.C	7.3
P00299	OXYGEN,DISS.-FIELD	MG/L	8.0	P00094	COND.(EC)FIELD	UM/CM	347
P00400	PH,FIELD	UNITS	8.0				

ILLINOIS ENVIRONMENTAL PROTECTION AGENCY

IP NUMBER : CDC4845
...G POINT DESC. : WAUKEGAN HARBOR

MITTING SOURCE # : CZR 01 SITE : :
E COLLECTED : 901114 TIME COLLECTED : 1057 SAMPLING PROGRAM : 29

LECTED BY : HE/CB DELIVERED BY : CB
MENTS : NEW STATION
DING CODE : WP20 AGENCY ROUTING : 01 UNIT CODE :
TYPE CODE : ILWQ SAMPLE PURPOSE CODE : 1 REPORTING INDICATOR : S

E RECEIVED : 901115 TIME RECEIVED : 1000 RECEIVED BY : LJP
OBSERVATIONS : TRIP BL SAM# :
ERVISORS INITIALS : JWD NOTE : K = LESS THAN VALUE

~~400~~	~~PH-LABORATORY~~	~~UNITS~~	~~7.6~~	~~P00095~~	~~CONDUCTIVITY~~	~~UM/CM~~	~~352~~
951	FLUORIDE,TOTAL	MG/L	0.13	P00940	CHLORIDE,TOTAL	MG/L	19
945	SULFATE,TOTAL	MG/L	32	P00630	NITRATE+NO2-NTOTAL	MG/L	0.31
610	AMMONIA-N,TOTAL	MG/L	0.29	P32730	PHENOLS,TOTAL	UG/L	5
665	PHOSPHORUS-P,TOTAL	MG/L	0.017	P00720	CYANIDE,TOTAL	MG/L	0.01
335	COD,TOTAL	MG/L	12	P00530	SOLIDS,TOT.SUS.	MG/L	8
535	SOLIDS,VOLATILE	MG/L	2	P00625	KJELDAHL-N,TOTAL	MG/L	0.5
556	OIL,GRAVIMETRIC	MG/L	3	P00076	TURBIDITY	NTU	7.3
	FECAL COLI/100ML	#	60A	P01002	ARSENIC,TOTAL	UG/L	2
	MERCURY,TOTAL	UG/L	0.05K	P00916	CALCIUM,TOTAL	MG/L	45
	MAGNESIUM,TOTAL	MG/L	14	P00929	SODIUM,TOTAL	MG/L	19
937	POTASSIUM,TOTAL	MG/L	2.7	P01105	ALUMINUM,TOTAL	UG/L	227
007	BARIUM,TOTAL	UG/L	37	P01022	BORON,TOTAL	UG/L	31
012	BERYLLIUM,TOTAL	UG/L	0.5K	P01027	CADMIUM,TOTAL	UG/L	3K
034	CHROMIUM,TOTAL	UG/L	5K	P01042	COPPER,TOTAL	UG/L	5K
037	COBALT,TOTAL	UG/L	5K	P01045	IRON,TOTAL	UG/L	343
051	LEAD,TOTAL	UG/L	50K	P01055	MANGANESE,TOTAL	UG/L	32
067	NICKEL,TOTAL	UG/L	10K	P01077	SILVER,TOTAL	UG/L	3K
082	STRONTIUM,TOTAL	UG/L	147	P01087	VANADIUM,TOTAL	UG/L	5K
092	ZINC,TOTAL	UG/L	30K	P00900	HARDNESS CALC.	MG/L	170C
020	TEMPERATURE,AIR	DEG.C	12	P00010	TEMPERATURE,WATER	DEG.C	6.4
299	OXYGEN,DISS.-FIELD	MG/L	10.7	P00094	COND.(EC)FIELD	UM/CM	330
400	PH,FIELD	UNITS	7.3				

ILLINOIS ENVIRONMENTAL PROTECTION AGENCY

MPLE NUMBER : C004846
PLING POINT DESC. : WAUKEGAN HARBOR CHANNEL

BMITTING SOURCE # : QZS-01 SITE # :
TE COLLECTED : 901114 TIME COLLECTED : 1010 SAMPLING PROGRAM : 22

LLECTED BY : HE/CB DELIVERED BY : [illegible]
MMENTS : NEW STATION
NDING CODE : WP2C AGENCY ROUTING : 01 UNIT CODE :
M TYPE CODE : ILWQ SAMPLE PURPOSE CODE : 1 REPORTING INDICATOR : 8

TE RECEIVED : 901115 TIME RECEIVED : 1000 RECEIVED BY : LJP
S OBSERVATIONS : TRIP BL SAM# :
PERVISORS INITIALS : JWO NOTE : K = LESS THAN VALUE

~~0403~~	~~PH-LABORATORY~~	~~UNITS~~	~~: 7.7~~	~~P00095~~	~~CONDUCTIVITY~~	~~UM/CM~~	~~: 312~~
0951	FLUORIDE,TOTAL	MG/L	: 0.11	P00940	CHLORIDE,TOTAL	MG/L	: 11
0945	SULFATE,TOTAL	MG/L	: 38	P00630	NITRATE&NO2-NTOTAL	MG/L	: 0.29
0610	AMMONIA-N,TOTAL	MG/L	: 0.22	P32730	PHENOLS,TOTAL	UG/L	: 5K
0665	PHOSPHORUS-P,TOTAL	MG/L	: 0.019	P00720	CYANIDE,TOTAL	MG/L	: 0.01
0335	COD,TOTAL	MG/L	: 13	P00530	SOLIDS,TOT.SUS.	MG/L	: 18
0535	SOLIDS,VOLATILE	MG/L	: 5	P00625	KJELDAHL-N,TOTAL	MG/L	: 0.4
0556	OIL,GRAVIMETRIC	MG/L	: 2	P00076	TURBIDITY	NTU	: 16.4
1616	FECAL COLI/100ML	#	: 183	P01002	ARSENIC,TOTAL	UG/L	: 2
[illegible]	MERCURY,TOTAL	UG/L	: 0.05K	P00916	CALCIUM,TOTAL	MG/L	: 42
	MAGNESIUM,TOTAL	MG/L	: 14	P00929	SODIUM,TOTAL	MG/L	: 12
	POTASSIUM,TOTAL	MG/L	: 1.2	P01105	ALUMINUM,TOTAL	UG/L	: 494
1007	BARIUM,TOTAL	UG/L	: 23	P01022	BORON,TOTAL	UG/L	: 50K
1012	BERYLLIUM,TOTAL	UG/L	: 0.5K	P01027	CADMIUM,TOTAL	UG/L	: 5
1034	CHROMIUM,TOTAL	UG/L	: 5	P01042	COPPER,TOTAL	UG/L	: 5
1037	COBALT,TOTAL	UG/L	: 5K	P01045	IRON,TOTAL	UG/L	: 691
1051	LEAD,TOTAL	UG/L	: 100K	P01055	MANGANESE,TOTAL	UG/L	: 23
1067	NICKEL,TOTAL	UG/L	: 20	P01077	SILVER,TOTAL	UG/L	: 3K
1082	STRONTIUM,TOTAL	UG/L	: 134	P01057	VANADIUM,TOTAL	UG/L	: 5K
1092	ZINC,TOTAL	UG/L	: 100K	P00900	HARDNESS CALC.	MG/L	: 1620
0020	TEMPERATURE,AIR	DEG.C	: 12	P00010	TEMPERATURE,WATER	DEG.C	: 6.3
0299	OXYGEN,DISS.-FIELD	MG/L	: 9.4	P00094	CONC.(EC)FIELD	UM/CM	: 304
0400	PH,FIELD	UNITS	: 7.1				

ILLINOIS ENVIRONMENTAL PROTECTION AGENCY

N' NUMBER : C004647
NG POINT DESC. : NEW HARBOR

SMITTING SOURCE # : CIT C1 SITE # :
TE COLLECTED : 901114 TIME COLLECTED : 1327 SAMPLING PROGRAM : 28

LECTED BY : ME/CA DELIVERED BY : CB
MENTS : NEW STATION
NDING CODE : WP20 AGENCY ROUTING : C1 UNIT CODE :
T TYPE CODE : ILWQ SAMPLE PURPOSE CODE : 1 REPORTING INDICATOR : R

TE RECEIVED : 901115 TIME RECEIVED : 1000 RECEIVED BY : LJP
S OBSERVATIONS : TRIP BL SAMP :
PERVISORS INITIALS : JWG NOTE : < = LESS THAN VALUE

~~0403~~	~~PH-LABORATORY~~	~~UNITS~~	~~:~~	~~7.3~~	~~00095~~	~~CONDUCTIVITY~~	~~UM/CM : 211~~
00951	FLUORIDE,TOTAL	MG/L	:	0.10	00940	CHLORIDE,TOTAL	MG/L : 12
00945	SULFATE,TOTAL	MG/L	:	28	00630	NITRATE&NO2-NTOTAL	MG/L : 0.31
00610	AMMONIA-N,TOTAL	MG/L	:	0.09	32730	PHENOLS,TOTAL	UG/L : 5K
00665	PHOSPHORUS-P,TOTAL	MG/L	:	0.011	00720	CYANIDE,TOTAL	MG/L : 0.005K
00335	COD,TOTAL	MG/L	:	11	00530	SOLIDS,TOT.SUS.	MG/L : 6
00535	SOLIDS,VOLATILE	MG/L	:	4	00625	KJELDAHL-N,TOTAL	MG/L : 0.3
00556	OIL,GRAVIMETRIC	MG/L	:	1K	00070	TURBIDITY	NTU : 0.5
31616	FECAL COLI/100ML	#	:	50K	01002	ARSENIC,TOTAL	UG/L : 1
71900	MERCURY,TOTAL	UG/L	:	0.05K	00916	CALCIUM,TOTAL	MG/L : 42
00927	MAGNESIUM,TOTAL	MG/L	:	13	00929	SODIUM,TOTAL	MG/L : 13
00937	POTASSIUM,TOTAL	MG/L	:	3.2	01106	ALUMINUM,TOTAL	UG/L : 272
01007	BARIUM,TOTAL	UG/L	:	24	01022	BORON,TOTAL	UG/L : 30K
01012	BERYLLIUM,TOTAL	UG/L	:	3.0K	01027	CADMIUM,TOTAL	UG/L : 3K
01034	CHROMIUM,TOTAL	UG/L	:	5K	01042	COPPER,TOTAL	UG/L : 5
01037	COBALT,TOTAL	UG/L	:	1K	01045	IRON,TOTAL	UG/L : 347
01051	LEAD,TOTAL	UG/L	:	10K	01055	MANGANESE,TOTAL	UG/L : 9
01067	NICKEL,TOTAL	UG/L	:	2K	01077	SILVER,TOTAL	UG/L : 5K
01082	STRONTIUM,TOTAL	UG/L	:	154	01087	VANADIUM,TOTAL	UG/L : 5K
01092	ZINC,TOTAL	UG/L	:	50K	00900	HARDNESS CALC.	MG/L : 159C
00020	TEMPERATURE,AIR	DEG.C	:	12	00010	TEMPERATURE,WATER	DEG.C : 8.5
00299	OXYGEN,DISS.-FIELD	MG/L	:	10.2	00094	COND.(EC) FIELD	UM/CM : 306
00400	PH,FIELD	UNITS	:	7.4			

ILLINOIS ENVIRONMENTAL PROTECTION AGENCY

MPLE NUMBER : D086894
MPLING POINT DESC. : WAUKEGAN RAP/NORTH BEACH

MITTING SOURCE # : GZN 01 SITE # :
TE COLLECTED : 901114 TIME COLLECTED : 1520 SAMPLING PROGRAM : 28

LLECTED BY : ME/CS DELIVERED BY : EPA
MMENTS : WAUKEGAN RAP
NOING CODE : WP06 AGENCY ROUTING : 01 UNIT CODE :
M TYPE CODE : ILWQ SAMPLE PURPOSE CODE : 1 REPORTING INDICATOR : B

TE RECEIVED : 901116 TIME RECEIVED : 1045 RECEIVED BY : D V
B OBSERVATIONS : 1 GAL TRIP BL SAM# :
PERVISORS INITIALS : JTM NOTE : K = LESS THAN VALUE

9330	ALDRIN	UG/L	.01K
9380	DIELDRIN	UG/L	.01K
9370	TOTAL DDT	UG/L	.01K
9327	O,P'-DDE	UG/L	.01K
9320	P,P'-DDE	UG/L	.01K
9315	O,P'-DDD	UG/L	.01K
9310	P,P'-DDD	UG/L	.01K
9305	O,P'-DDT	UG/L	.01K
9300	P,P'-DDT	UG/L	.01K
9350	TOTAL CHLORDANE	UG/L	.02K
9062	CHLORDANE,CIS ISOMER	UG/L	.01K
9065	CHLORDANE,TRANS ISOMER	UG/L	.01K
9050	ENDRIN	UG/L	.01K
9060	METHOXYCHLOR	UG/L	.05K
9337	ALPHA-BHC	UG/L	.01K
9340	GAMMA-BHC (LINDANE)	UG/L	.01K
9700	HEXACHLOROBENZENE	UG/L	.01K
9516	TOTAL PCBS	UG/L	0.1K
9400	TOXAPHENE	UG/L	1.0K
9032	PENTACHLOROPHENOL	UG/L	.01K

A GC/Mass spectrometry Analysis was performed on this sample. No organic compounds were detected.

D Heney

ILLINOIS ENVIRONMENTAL PROTECTION AGENCY

AMPLE NUMBER : D086895
PLING POINT DESC. : WAUKEGAN RAP/UPPER HARBOR 3

MITTING SOURCE # : CZC U1 SITE # :
ATE COLLECTED : 901114 TIME COLLECTED : 1210 SAMPLING PROGRAM : 28

OLLECTED BY : ME/Co DELIVERED BY : EPA
OMMENTS : WAUKEGAN RAP/TOXOPHENE
UNDING CODE : IPO6 AGENCY ROUTING : 01 UNIT CODE :
AM TYPE CODE : ILNW SAMPLE PURPOSE CODE : 1 REPORTING INDICATOR : 8

ATE RECEIVED : 901116 TIME RECEIVED : 1045 RECEIVED BY : D V
AB CoSERVATI..S : 1 GAL TRIP BL SAM# :
UPERVISORS INITIALS : JTM NOTE : K = LESS THAN VALUE

39330	ALDRIN	UG/L	.01K
39380	DIELDRIN	UG/L	.01K
39370	TOTAL DDT	UG/L	.01K
39327	O,P'-DDE	UG/L	.01K
39320	P,P'-DDE	UG/L	.01K
39315	O,P'-DDD	UG/L	.01K
39310	P,P'-DDD	UG/L	.01K
39305	O,P'-DDT	UG/L	.01K
39300	P,P'-DDT	UG/L	.01K
39350	TOTAL CHLORDANE	UG/L	.02K
39352	CHLORDANE,CIS ISOMER	UG/L	.01K
	CHLORDANE,TRANS ISOMER	UG/L	.01K
39340	ENDRIN	UG/L	.01K
39480	METHOXYCHLOR	UG/L	.05K
39337	ALPHA-BHC	UG/L	.01K
39340	GAMMA-BHC (LINDANE)	UG/L	.01K
39700	HEXACHLOROBENZENE	UG/L	.01K
39516	TOTAL PCBS	UG/L	0.1K
39400	TOXAPHENE	UG/L	1.0K
39032	PENTACHLOROPHENOL	UG/L	.01K

GC/Mass spectrometry analysis was performed on this sample. No organic compounds were detected.

J Hurley

ILLINOIS ENVIRONMENTAL PROTECTION AGENCY

AMPLE NUMBER : D086896
'MPLING POINT DESC. : WAUKEGAN HARBOR SLIP 1

-dMITTING SOURCE # : QZP 01 SITE # :
ATE COLLECTED : 901114 - TIME COLLECTED : 1145 SAMPLING PROGRAM : 28

OLLECTED BY : ME/Co DELIVERED BY : EPA
OMMENTS : WAUKEGAN RAP/TOXOPHENE
UNDING CODE : WP06 AGENCY ROUTING : 01 UNIT CODE :
AM TYPE CODE : ILWQ SAMPLE PURPOSE CODE : 1 REPORTING INDICATOR : B

ATE RECEIVED : 901115 TIME RECEIVED : 1045 RECEIVED BY : D V
AB OBSERVATIONS : 1 GAL TRIP BL SAM# :
UPERVISORS INITIALS : JTM NOTE : K = LESS THAN VALUE

39330	ALDRIN	UG/L	.01K
39380	DIELDRIN	UG/L	.01K
39370	TOTAL DDT	UG/L	.01K
39327	O,P'-DDE	UG/L	.01K
39320	P,P'-DDE	UG/L	.01K
39315	O,P'-DDD	UG/L	.01K
39310	P,P'-DDD	UG/L	.01K
39305	O,P'-DDT	UG/L	.01K
39300	P,P'-DDT	UG/L	.01K
39350	TOTAL CHLORDANE	UG/L	.02K
[illegible]62	CHLORDANE,CIS ISOMER	UG/L	.01K
[illegible]	CHLORDANE,TRANS ISOMER	UG/L	.01K
[illegible]7	ENDRIN	UG/L	.01K
39480	METHOXYCHLOR	UG/L	.05K
39337	ALPHA-BHC	UG/L	.01K
39340	GAMMA-BHC (LINDANE)	UG/L	.01K
39700	HEXACHLOROBENZENE	UG/L	.01K
39516	TOTAL PCBS	UG/L	0.1K
39400	TOXAPHENE	UG/L	1.0K
39032	PENTACHLOROPHENOL	UG/L	.01K

ILLINOIS ENVIRONMENTAL PROTECTION AGENCY

AMPLE NUMBER : D086897
A .ING POINT DESC. : WAUKEGAN HARBOR CENTRAL 5

SMITTING SOURCE # : CZQ 01 SITE # :
ATE COLLECTED : 901115 TIME COLLECTED : 1115 SAMPLING PROGRAM : 28

OLLECTED BY : ME/CS DELIVERED BY : EPA
OMMENTS : WAUKEGAN RAP/TOXAPHENE
UNDING CODE : WP06 AGENCY ROUTING : 01 UNIT CODE :
AM TYPE CODE : ILWQ SAMPLE PURPOSE CODE : 1 REPORTING INDICATOR : 3

ATE RECEIVED : 901116 TIME RECEIVED : 1045 RECEIVED BY : D V
AB OBSERVATIONS : 1 GAL TRIP BL SAM# :
UPERVISORS INITIALS : JTM NOTE : K = LESS THAN VALUE

39330	ALDRIN	UG/L :	.01K
39380	DIELDRIN	UG/L :	.01K
39370	TOTAL DDT	UG/L :	.01K
39327	O,P'-DDE	UG/L :	.01K
39320	P,P'-DDE	UG/L :	.01K
39315	O,P'-DDD	UG/L :	.01K
39310	P,P'-DDD	UG/L :	.01K
39305	O,P'-DDT	UG/L :	.01K
39300	P,P'-DDT	UG/L :	.01K
50	TOTAL CHLORDANE	UG/L :	.02K
62	CHLORDANE,CIS ISOMER	UG/L :	.01K
63	CHLORDANE,TRANS ISOMER	UG/L :	.01K
39390	ENDRIN	UG/L :	.01K
39760	METHOXYCHLOR	UG/L :	.05K
39337	ALPHA-BHC	UG/L :	.01K
39340	GAMMA-BHC (LINDANE)	UG/L :	.01K
39700	HEXACHLOROBENZENE	UG/L :	.01K
39516	TOTAL PCBS	UG/L :	0.1K
39400	TOXAPHENE	UG/L :	1.0K
39032	PENTACHLOROPHENOL	UG/L :	.01

ILLINOIS ENVIRONMENTAL PROTECTION AGENCY

MPLE NUMBER : D086898
MPLING POINT DESC. : WAUKEGAN HARBOR 6

MITTING SOURCE # : GZR 01 / SITE # :-
TE COLLECTED : 901114 _ TIME COLLECTED : 1050 SAMPLING PROGRAM : 28

LLECTED BY : ME/CE DELIVERED BY : EPA
MMENTS : WAUKEGAN RAP/TOXOPHENE
NDING CODE : WP06 AGENCY ROUTING : 01 UNIT CODE :
M TYPE CODE : ILWQ SAMPLE PURPOSE CODE : 1 REPORTING INDICATOR : S

TE RECEIVED : 901116 TIME RECEIVED : 10-- RECEIVED BY : D V
6 OBSERVATIONS : 1 GAL TRIP BL SAM# :
PERVISORS INITIALS : JTH NOTE : K = LESS THAN VALUE

39330	ALDRIN	UG/L	.01K
39380	DIELDRIN	UG/L	.01K
39370	TOTAL DDT	UG/L	.01K
39327	O,P'-DDE	UG/L	.01K
39320	P,P'-DDE	UG/L	.01K
39315	O,P'-DDD	UG/L	.01K
39310	P,P'-DDD	UG/L	.01K
39305	O,P'-DDT	UG/L	.01K
39300	P,P'-DDT	UG/L	.01K
39350	TOTAL CHLORDANE	UG/L	.02K
062	CHLORDANE,CIS ISOMER	UG/L	.01K
065	CHLORDANE,TRANS ISOMER	UG/L	.01K
39390	ENDRIN	UG/L	.01K
39480	METHOXYCHLOR	UG/L	.05K
39337	ALPHA-BHC	UG/L	.01K
39340	GAMMA-BHC (LINDANE)	UG/L	.01K
39700	HEXACHLOROBENZENE	UG/L	.01K
39516	TOTAL PCBS	UG/L	0.1K
39400	TOXAPHENE	UG/L	1.0K
39032	PENT-CHLOROPHENOL	UG/L	.01

ILLINOIS ENVIRONMENTAL PROTECTION AGENCY

AMPLE NUMBER : D086699
A ING POINT DESC. : WAUKEGAN HARBOR CHANNEL 7

MITTING SOURCE # : GZS 01 SITE # :
ATE COLLECTED : 901114 TIME COLLECTED : 1010 SAMPLING PROGRAM : 28

OLLECTED BY : ME/CS DELIVERED BY : EPA
OMMENTS : WAUKEGAN RAP/TOXOPHENE
UNDING CODE : WP06 AGENCY ROUTING : 01 UNIT CODE :
AM TYPE CODE : ILWQ SAMPLE PURPOSE CODE : 1 REPORTING INDICATOR : S

ATE RECEIVED : 901116 TIME RECEIVED : 1045 RECEIVED BY : D V
AB OBSERVATIONS : 1 GAL TRIP BL SAM# :
UPERVISORS INITIALS : JTH NOTE : K = LESS THAN VALUE

39330	ALDRIN	UG/L	.01K
39360	DIELDRIN	UG/L	.01K
39370	TOTAL DDT	UG/L	.01K
39327	O,P'-DDE	UG/L	.01K
39320	P,P'-DDE	UG/L	.01K
39315	O,P'-DDD	UG/L	.01K
39310	P,P'-DDD	UG/L	.01K
39305	O,P'-DDT	UG/L	.01K
39300	P,P'-DDT	UG/L	.01K
39350	TOTAL CHLORDANE	UG/L	.02K
39362	CHLORDANE,CIS ISOMER	UG/L	.01K
39365	CHLORDANE,TRANS ISOMER	UG/L	.01K
39390	ENDRIN	UG/L	.01K
39480	METHOXYCHLOR	UG/L	.05K
39337	ALPHA-BHC	UG/L	.01K
39340	GAMMA-BHC (LINDANE)	UG/L	.01K
39700	HEXACHLOROBENZENE	UG/L	.01K
39516	TOTAL PCBS	UG/L	0.1K
39400	TOXAPHENE	UG/L	1.0K
39032	PENTACHLOROPHENOL	UG/L	.01K

ILLINOIS ENVIRONMENTAL PROTECTION AGENCY

SAMPLE NUMBER : D086900
SAMPLING POINT DESC. : NEW HARBOR 8

SUBMITTING SOURCE # : QIT 01 SITE # :
DATE COLLECTED : 901114 - TIME COLLECTED : 1320 SAMPLING PROGRAM : 2E

COLLECTED BY : ME/CB DELIVERED BY : EPA
COMMENTS : WAUKEGAN RAP/TOXOPHENE
FUNDING CODE : WP06 AGENCY ROUTING : 01 UNIT CODE :
LAM TYPE CODE : ILW1 SAMPLE PURPOSE CODE : 1 REPORTING INDICATOR : B

DATE RECEIVED : 901116 TIME RECEIVED : 1045 RECEIVED BY : D V
LAB OBSERVATIONS : 1 GAL TRIP BL SAM# :
SUPERVISORS INITIALS : JTH NOTE : K = LESS THAN VALUE

39330	ALDRIN	UG/L	.01K
39380	DIELDRIN	UG/L	.01K
39370	TOTAL DDT	UG/L	.01K
39327	O,P'-DDE	UG/L	.01K
39320	P,P'-DDE	UG/L	.01K
39315	O,P'-DDD	UG/L	.01K
39310	P,P'-DDD	UG/L	.01K
39305	O,P'-DDT	UG/L	.01K
39300	P,P'-DDT	UG/L	.01K
39350	TOTAL CHLORDANE	UG/L	.02K
2062	CHLORDANE,CIS ISOMER	UG/L	.01K
[illegible]	CHLORDANE,TRANS ISOMER	UG/L	.01K
[illegible]	ENDRIN	UG/L	.01K
39480	METHOXYCHLOR	UG/L	.05K
39337	ALPHA-BHC	UG/L	.01K
39340	GAMMA-BHC (LINDANE)	UG/L	.01K
39700	HEXACHLOROBENZENE	UG/L	.01K
39516	TOTAL PCBS	UG/L	0.1K
39400	TOXAPHENE	UG/L	1.0K
37032	PENTACHLOROPHENOL	UG/L	.01

ILLINOIS ENVIRONMENTAL PROTECTION AGENCY

AMPLE NUMBER : D086901
'PLING POINT DESC. : WAUKEGAN NORTH BEACH 2

MITTING SOURCE # : QZN 01 SITE # :
TE COLLECTED : 901114 TIME COLLECTED : 1520 SAMPLING PROGRAM : 26

OLLECTED BY : ME/CB DELIVERED BY : EPA
OMMENTS : VOLS
UNDING CODE : WP06 AGENCY ROUTING : 01 UNIT CODE :
AM TYPE CODE : ILWQ SAMPLE PURPOSE CODE : 1 REPORTING INDICATOR : 8

ATE RECEIVED : 901116 TIME RECEIVED : 1045 RECEIVED BY : D V
AB OBSERVATIONS : 1 VOC TRIP BL SAM# : D086908
UPERVISORS INITIALS : JTH NOTE : K = LESS THAN VALUE

32106	CHLOROFORM	UG/L	1.0K
32101	DICHLOROBROMOMETHANE	UG/L	1.0K
32105	CHLORODIBROMOMETHANE	UG/L	1.0K
32104	BROMOFORM	UG/L	1.0K
34423	METHYLENE CHLORIDE	UG/L	1.0K
34501	1,1-DICHLOROETHYLENE	UG/L	1.0K
34496	1,1-DICHLOROETHANE	UG/L	1.0K
34546	TRANS-1,2-DICHLOROETHYLENE	UG/L	1.0K
34531	1,2-DICHLOROETHANE	UG/L	1.0K
[illegible]06	1,1,1-TRICHLOROETHANE	UG/L	1.0K
.2	CARBON TETRACHLORIDE	UG/L	1.0K
.30	TRICHLOROETHYLENE	UG/L	1.0K
34475	TETRACHLOROETHYLENE	UG/L	1.0K
34301	CHLOROBENZENE	UG/L	1.0K
34716	DICHLOROBENZENE(TOTAL)	UG/L	1.0K
78124	BENZENE	UG/L	1.0K
78131	TOLUENE	UG/L	1.0K
78113	ETHYLBENZENE	UG/L	1.0K
81551	XYLENES	UG/L	1.0K
77093	CIS-1,2-DICHLOROETHYLENE	UG/L	1.0K

Gas Chromatography

ILLINOIS ENVIRONMENTAL PROTECTION AGENCY

SAMPLE NUMBER : 0086902
SAMPLING POINT DESC. : WAUKEGAN HARBOR UPPER HARBOR 3

SUBMITTING SOURCE # : GZC 01 SITE # :
DATE COLLECTED : 901114 TIME COLLECTED : 1210 SAMPLING PROGRAM : 28

COLLECTED BY : ME/CB DELIVERED BY : EPA
COMMENTS : VOLS
FUNDING CODE : WP06 AGENCY ROUTING : 01 UNIT CODE :
SAM TYPE CODE : ILWQ SAMPLE PURPOSE CODE : 1 REPORTING INDICATOR : B

DATE RECEIVED : 901116 TIME RECEIVED : 1045 RECEIVED BY : C V
LAB OBSERVATIONS : 2 VOC TRIP BL SAM# : 0086908
SUPERVISORS INITIALS : JTH NOTE : K = LESS THAN VALUE

P34418	CHLOROMETHANE	UG/L	10K
P34413	BROMOMETHANE	UG/L	10K
P39175	VINYL CHLORIDE	UG/L	10K
P34311	CHLOROETHANE	UG/L	10K
P34423	METHYLENE CHLORIDE	UG/L	5.0K
P81552	ACETONE	UG/L	10K
P34466	TRICHLOROFLUOROMETHANE	UG/L	5.0K
P77277	BROMOCHLOROMETHANE	UG/L	5.0K
P77041	CARBON DISULFIDE	UG/L	5.0K
P34501	1,1-DICHLOROETHYLENE	UG/L	5.0K
4496	1,1-DICHLOROETHANE	UG/L	5.0K
546	TRANS-1,2-DICHLOROETHYLENE	UG/L	5.0K
7093	CIS-1,2-DICHLOROETHYLENE	UG/L	5.0K
P32106	CHLOROFORM	UG/L	5.0K
P34531	1,2-DICHLOROETHANE	UG/L	5.0K
P81595	2-BUTANONE(MEK)	UG/L	10K
P34506	1,1,1-TRICHLOROETHANE	UG/L	5.0K
P32102	CARBON TETRACHLORIDE	UG/L	5.0K
P77057	VINYL ACETATE	UG/L	10K
P32101	DICHLOROBROMOMETHANE	UG/L	5.0K
P34541	1,2-DICHLOROPROPANE	UG/L	5.0K
P34704	CIS-1,3-DICHLOROPROPENE	UG/L	5.0K
P39180	TRICHLOROETHYLENE	UG/L	5.0K
P32105	CHLORODIBROMOMETHANE	UG/L	5.0K
P34511	1,1,2-TRICHLOROETHANE	UG/L	5.0K
P78124	BENZENE	UG/L	5.0K
P34699	TRANS-1,3-DICHLOROPROPENE	UG/L	5.0K
P34576	2-CHLOROETHYLVINYL ETHER	UG/L	5.0K
P32104	BROMOFORM	UG/L	5.0K

AMPLE NUMBER : D086902

P 33	4-METHYL-2-PENTANONE(MIBK)	UG/L	: 10K
~ .03	2-HEXANONE(MBK)	UG/L	: 10K
,4475	TETRACHLOROETHYLENE	UG/L	: 5.0K
P34516	1,1,2,2-TETRACHLOROETHANE	UG/L	: 5.0K
P78131	TOLUENE	UG/L	: 5.0K
P3450	CHLOROBENZENE	UG/L	: 5.0K
P7811	ETHYLBENZENE	UG/L	: 5.0K
P77128	STYRENE	UG/L	: 5.0K
P81551	XYLENE	UG/L	: 62

: THE FOLLOWING QUANTITATIONS ARE APPROXIMATE
: ALIPHATIC HYDROCARBONS UG/L ; 47 ~oil
: OTHER ORGANIC COMPOUNDS UG/L ; 50 cannot identify

ILLINOIS ENVIRONMENTAL PROTECTION AGENCY

SAMPLE NUMBER : 0086903
SAMPLING POINT DESC. : WAUKEGAN HARBOR SLIP 1 4

SUBMITTING SOURCE # : GZP 01 / SITE # :
DATE COLLECTED : 901114 _ TIME COLLECTED : 1145 SAMPLING PROGRAM : 28

COLLECTED BY : ME/CB DELIVERED BY : EPA
COMMENTS : VOLS
FUNDING CODE : WP06 AGENCY ROUTING : 01 UNIT CODE :
SAM TYPE CODE : ILWU SAMPLE PURPOSE CODE : 1 REPORTING INDICATOR : B

DATE RECEIVED : 901116 TIME RECEIVED : 1045 RECEIVED BY : D V
LAB OBSERVATIONS : 2 VOC TRIP BL SAM# : 0086908
SUPERVISORS INITIALS : JTH NOTE : K = LESS THAN VALUE

P34413	CHLOROMETHANE	UG/L	: 10K
P34413	BROMOMETHANE	UG/L	: 10K
P39175	VINYL CHLORIDE	UG/L	: 10K
P34311	CHLOROETHANE	UG/L	: 10K
P34423	METHYLENE CHLORIDE	UG/L	: 5.0K
P81552	ACETONE	UG/L	: 10K
P34488	TRICHLOROFLUOROMETHANE	UG/L	: 5.0K
P77277	BROMOCHLOROMETHANE	UG/L	: 5.0K
P77041	CARBON DISULFIDE	UG/L	: 5.0K
P34501	1,1-DICHLOROETHYLENE	UG/L	: 5.0K
4496	1,1-DICHLOROETHANE	UG/L	: 5.0K
~6	TRANS-1,2-DICHLOROETHYLENE	UG/L	: 5.0K
.093	CIS-1,2-DICHLOROETHYLENE	UG/L	: 5.0K
P32106	CHLOROFORM	UG/L	: 5.0K
P34531	1,2-DICHLOROETHANE	UG/L	: 5.0K
P81595	2-BUTANONE(MEK)	UG/L	: 10K
P34506	1,1,1-TRICHLOROETHANE	UG/L	: 5.0K
P32102	CARBON TETRACHLORIDE	UG/L	: 5.0K
P77057	VINYL ACETATE	UG/L	: 10K
P32101	DICHLOROBROMOMETHANE	UG/L	: 5.0K
P34541	1,2-DICHLOROPROPANE	UG/L	: 5.0K
P34704	CIS-1,3-DICHLOROPROPENE	UG/L	: 5.0K
P39180	TRICHLOROETHYLENE	UG/L	: 5.0K
P32105	CHLORODIBROMOMETHANE	UG/L	: 5.0K
P34511	1,1,2-TRICHLOROETHANE	UG/L	: 5.0K
P78124	BENZENE	UG/L	: 5.0K
P34699	TRANS-1,3-DICHLOROPROPENE	UG/L	: 5.0K
P34576	2-CHLOROETHYLVINYL ETHER	UG/L	: 5.0K
P32104	BROMOFORM	UG/L	: 5.0K

GC Mass SP-a Method

\MPLE NUMBER : D086903

'133	4-METHYL-2-PENTANONE(MIBK)	UG/L	: 10K
103	2-HEXANONE(MBK)	UG/L	: 10K
.475	TETRACHLOROETHYLENE	UG/L	: 5.0K
'34516	1,1,2,2-TETRACHLOROETHANE	UG/L	: 5.0K
'78131	TOLUENE	UG/L	: 5.0K
'34301	CHLOROBENZENE	UG/L	: 5.0K
'78113	ETHYLBENZENE	UG/L	: 5.0K
'77128	STYRENE	UG/L	: 5.0K
'81551	XYLENE	UG/L	: 64

: THE FOLLOWING QUANTITATIONS ARE APPROXIMATE
: ALIPHATIC HYDROCARBONS UG/L ; 64
: OTHER ORGANIC COMPOUNDS UG/L ; 44

ILLINOIS ENVIRONMENTAL PROTECTION AGENCY

SAMPLE NUMBER : D086904
SAMPLING POINT DESC. : WAUKEGAN HARBOR CENTRAL 5

SUBMITTING SOURCE # : GZC 01 SITE # :
DATE COLLECTED : 901114- TIME COLLECTED : 1115 SAMPLING PROGRAM : 28

COLLECTED BY : ME/CB DELIVERED BY : EPA
COMMENTS : VOLS
FUNDING CODE : WP06 AGENCY ROUTING : 01 UNIT CODE :
SAM TYPE CODE : ILWQ SAMPLE PURPOSE CODE : 1 REPORTING INDICATOR : B

DATE RECEIVED : 901116 TIME RECEIVED : 1045 RECEIVED BY : D V
LAB OBSERVATIONS : 2 VOC TRIP BL SAM# : D086908
SUPERVISORS INITIALS : JTH NOTE : K = LESS THAN VALUE

P34418	CHLOROMETHANE	UG/L	10K
P34413	BROMOMETHANE	UG/L	10K
P39175	VINYL CHLORIDE	UG/L	10K
P34311	CHLOROETHANE	UG/L	10K
P34423	METHYLENE CHLORIDE	UG/L	5.0K
P81552	ACETONE	UG/L	10K
P34488	TRICHLOROFLUOROMETHANE	UG/L	5.0K
P77277	BROMOCHLOROMETHANE	UG/L	5.0K
P77041	CARBON DISULFIDE	UG/L	5.0K
P34501	1,1-DICHLOROETHYLENE	UG/L	5.0K
34496	1,1-DICHLOROETHANE	UG/L	5.0K
34546	TRANS-1,2-DICHLOROETHYLENE	UG/L	5.0K
P77093	CIS-1,2-DICHLOROETHYLENE	UG/L	5.0K
P32106	CHLOROFORM	UG/L	5.0K
P34531	1,2-DICHLOROETHANE	UG/L	5.0K
P81595	2-BUTANONE(MEK)	UG/L	10K
P34506	1,1,1-TRICHLOROETHANE	UG/L	5.0K
P32102	CARBON TETRACHLORIDE	UG/L	5.0K
P77057	VINYL ACETATE	UG/L	10K
P32101	DICHLOROBROMOMETHANE	UG/L	5.0K
P34541	1,2-DICHLOROPROPANE	UG/L	5.0K
P34704	CIS-1,3-DICHLOROPROPENE	UG/L	5.0K
P39180	TRICHLOROETHYLENE	UG/L	5.0K
P32105	CHLORODIBROMOMETHANE	UG/L	5.0K
P34511	1,1,2-TRICHLOROETHANE	UG/L	5.0K
P78124	BENZENE	UG/L	5.0K
P34699	TRANS-1,3-DICHLOROPROPENE	UG/L	5.0K
P34576	2-CHLOROETHYLVINYL ETHER	UG/L	5.0K
P32104	BROMOFORM	UG/L	5.0K

AMPLE NUMBER : D086904

P[illegible]133	4-METHYL-2-PENTANONE(MIBK)	UG/L	: 10K
[illegible]103	2-HEXANONE(MBK)	UG/L	: 10K
[illegible]4475	TETRACHLOROETHYLENE	UG/L	: 5.0K
P34516	1,1,2,2-TETRACHLOROETHANE	UG/L	: 5.0K
P78131	TOLUENE	UG/L	: 5.0K
P34301	CHLOROBENZENE	UG/L	: 5.0K
P78113	ETHYLBENZENE	UG/L	: 5.0K
P77128	STYRENE	UG/L	: 5.0K
P81551	XYLENE	UG/L	: 39

: THE FOLLOWING QUANTITATIONS ARE APPROXIMATE
: ALIPHATIC HYDROCARBONS UG/L : 19
: OTHER ORGANIC COMPOUNDS UG/L : 42

ILLINOIS ENVIRONMENTAL PROTECTION AGENCY

AMPLE NUMBER : D086905
AMPLING POINT DESC. : WAUKEGAN HARBOR 6

MITTING SOURCE # : GZR 01 SITE # :
ATE COLLECTED : 901114 _ TIME COLLECTED : 1050 SAMPLING PROGRAM : 8

OLLECTED BY : ME/CB DELIVERED BY : EPA
OMMENTS : VOLS
UNDING CODE : WP06 AGENCY ROUTING : 01 UNIT CODE :
AM TYPE CODE : ILWQ SAMPLE PURPOSE CODE : 1 REPORTING INDICATOR : B

ATE RECEIVED : 901116 TIME RECEIVED : 1045 RECEIVED BY : C V
AB OBSERVATIONS : 2 VOC TRIP BL SAM# : D086908
UPERVISORS INITIALS : JTH NOTE : K = LESS THAN VALUE

34418	CHLOROMETHANE	UG/L	: 10K
34413	BROMOMETHANE	UG/L	: 10K
39175	VINYL CHLORIDE	UG/L	: 10K
34311	CHLOROETHANE	UG/L	: 10K
34423	METHYLENE CHLORIDE	UG/L	: 5.0K
81552	ACETONE	UG/L	: 10K
34488	TRICHLOROFLUOROMETHANE	UG/L	: 5.0K
77277	BROMOCHLOROMETHANE	UG/L	: 5.0K
77041	CARBON DISULFIDE	UG/L	: 5.0K
34501	1,1-DICHLOROETHYLENE	UG/L	: 5.0K
496	1,1-DICHLOROETHANE	UG/L	: 5.0K
6	TRANS-1,2-DICHLOROETHYLENE	UG/L	: 5.0K
1,093	CIS-1,2-DICHLOROETHYLENE	UG/L	: 5.0K
32106	CHLOROFORM	UG/L	: 5.0K
34531	1,2-DICHLOROETHANE	UG/L	: 5.0K
81595	2-BUTANONE(MEK)	UG/L	: 10K
34506	1,1,1-TRICHLOROETHANE	UG/L	: 5.0K
32102	CARBON TETRACHLORIDE	UG/L	: 5.0K
77057	VINYL ACETATE	UG/L	: 10K
32101	DICHLOROBROMOMETHANE	UG/L	: 5.0K
34541	1,2-DICHLOROPROPANE	UG/L	: 5.0K
34704	CIS-1,3-DICHLOROPROPENE	UG/L	: 5.0K
39180	TRICHLOROETHYLENE	UG/L	: 5.0K
32105	CHLORODIBROMOMETHANE	UG/L	: 5.0K
34511	1,1,2-TRICHLOROETHANE	UG/L	: 5.0K
78124	BENZENE	UG/L	: 5.0K
34699	TRANS-1,3-DICHLOROPROPENE	UG/L	: 5.0K
34576	2-CHLOROETHYLVINYL ETHER	UG/L	: 5.0K
32104	BROMOFORM	UG/L	: 5.0K

SAMPLE NUMBER : D086905

P7133	4-METHYL-2-PENTANONE(MIBK)	UG/L	: 10K
103	2-HEXANONE(MBK)	UG/L	: 10K
P4475	TETRACHLOROETHYLENE	UG/L	: 5.0K
P34516	1,1,2,2-TETRACHLOROETHANE	UG/L	: 5.0K
P78131	TOLUENE	UG/L	: 5.0K
P34301	CHLOROBENZENE	UG/L	: 5.0K
P78113	ETHYLBENZENE	UG/L	: 5.0K
P77128	STYRENE	UG/L	: 5.0K
P81551	XYLENE	UG/L	: 5.0K

: THE FOLLOWING QUANTITATIONS ARE APPROXIMATE
: ALIPHATIC HYDROCARBONS UG/L ; 3
: OTHER ORGANIC COMPOUNDS UG/L ; 14

ILLINOIS ENVIRONMENTAL PROTECTION AGENCY

MPLE NUMBER : D086906
MPLING POINT DESC. : WAUKEGAN HARBOR CHANNEL 7

ITTING SOURCE # : QZS 01 SITE # :
E COLLECTED : 901114 TIME COLLECTED : 1010 SAMPLING PROGRAM : 28

LLECTED BY : ME/CB DELIVERED BY : EPA
MMENTS : VOLS
NDING CODE : WP06 AGENCY ROUTING : 01 UNIT CODE :
M TYPE CODE : ILWA SAMPLE PURPOSE CODE : 1 REPORTING INDICATOR : B

TE RECEIVED : 901116 TIME RECEIVED : 1045 RECEIVED BY : D V
B OBSERVATIONS : 2 VOC TRIP BL SAM# : D086903
PERVISORS INITIALS : JTH NOTE : K = LESS THAN VALUE

4418	CHLOROMETHANE	UG/L	10K
4413	BROMOMETHANE	UG/L	10K
9175	VINYL CHLORIDE	UG/L	10K
4311	CHLOROETHANE	UG/L	10K
4423	METHYLENE CHLORIDE	UG/L	5.0K
1552	ACETONE	UG/L	10K
[illegible]	TRICHLOROFLUOROMETHANE	UG/L	5.0K
	BROMOCHLOROMETHANE	UG/L	5.0K
[illegible]	CARBON DISULFIDE	UG/L	5.0K
4501	1,1-DICHLOROETHYLENE	UG/L	5.0K
[illegible]96	1,1-DICHLOROETHANE	UG/L	5.0K
[illegible]0	TRANS-1,2-DICHLOROETHYLENE	UG/L	5.0K
7093	CIS-1,2-DICHLOROETHYLENE	UG/L	5.0K
2106	CHLOROFORM	UG/L	5.0K
4531	1,2-DICHLOROETHANE	UG/L	5.0K
1595	2-BUTANONE(MEK)	UG/L	10K
4506	1,1,1-TRICHLOROETHANE	UG/L	5.0K
2102	CARBON TETRACHLORIDE	UG/L	5.0K
7057	VINYL ACETATE	UG/L	10K
2101	DICHLOROBROMOMETHANE	UG/L	5.0K
4541	1,2-DICHLOROPROPANE	UG/L	5.0K
4704	CIS-1,3-DICHLOROPROPENE	UG/L	5.0K
9180	TRICHLOROETHYLENE	UG/L	5.0K
2105	CHLORODIBROMOMETHANE	UG/L	5.0K
4511	1,1,2-TRICHLOROETHANE	UG/L	5.0K
8124	BENZENE	UG/L	5.0K
4699	TRANS-1,3-DICHLOROPROPENE	UG/L	5.0K
4576	2-CHLOROETHYLVINYL ETHER	UG/L	5.0K
2104	BROMOFORM	UG/L	5.0K

,AMPLE NUMBER : D086906

?133	4-METHYL-2-PENTANONE(MIBK)	UG/L	: 10K
103	2-HEXANONE(MBK)	UG/L	: 10K
34475	TETRACHLOROETHYLENE	UG/L	: 5.0K
P34516	1,1,2,2-TETRACHLOROETHANE	UG/L	: 5.0K
P78131	TOLUENE	UG/L	: 5.0K
P34301	CHLOROBENZENE	UG/L	: 5.0K
P78113	ETHYLBENZENE	UG/L	: 5.0K
P77128	STYRENE	UG/L	: 5.0K
P81551	XYLENE	UG/L	: 5.0K

: THE FOLLOWING QUANTITATIONS ARE APPROXIMATE
: OHTER ORGANIC COMPOUNDS UG/L ; 4

ILLINOIS ENVIRONMENTAL PROTECTION AGENCY

SAMPLE NUMBER : D086907
SAMPLING POINT DESC. : NEW HARBOR 8

SUBMITTING SOURCE # : QZT 01 SITE # :
DATE COLLECTED : 901114 TIME COLLECTED : 1320 SAMPLING PROGRAM : 28

COLLECTED BY : ME/CS DELIVERED BY : EPA
COMMENTS : VOLS
FUNDING CODE : WP06 AGENCY ROUTING : 01 UNIT CODE :
SAM TYPE CODE : ILWQ SAMPLE PURPOSE CODE : 1 REPORTING INDICATOR : 8

DATE RECEIVED : 901116 TIME RECEIVED : 1045 RECEIVED BY : C V
LAB OBSERVATIONS : 2 VOC TRIP BL SAM# : D086908
SUPERVISORS INITIALS : JTH NOTE : K = LESS THAN VALUE

P32106	CHLOROFORM	UG/L	1.0K
P32101	DICHLOROBROMOMETHANE	UG/L	1.0K
P32105	CHLORODIBROMOMETHANE	UG/L	1.0K
P32104	BROMOFORM	UG/L	1.0K
P34423	METHYLENE CHLORIDE	UG/L	1.0K
P34501	1,1-DICHLOROETHYLENE	UG/L	1.0K
P34496	1,1-DICHLOROETHANE	UG/L	1.0K
P34546	TRANS-1,2-DICHLOROETHYLENE	UG/L	1.0K
P34531	1,2-DICHLOROETHANE	UG/L	1.0K
P34506	1,1,1-TRICHLOROETHANE	UG/L	1.0K
2102	CARBON TETRACHLORIDE	UG/L	1.0K
39180	TRICHLOROETHYLENE	UG/L	1.0K
34475	TETRACHLOROETHYLENE	UG/L	1.0K
P34301	CHLOROBENZENE	UG/L	1.0K
P34716	DICHLOROBENZENE(TOTAL)	UG/L	1.0K
P78124	BENZENE	UG/L	1.0K
P78131	TOLUENE	UG/L	1.0K
P78113	ETHYLBENZENE	UG/L	1.0K
P81551	XYLENES	UG/L	1.0K
P77093	CIS-1,2-DICHLOROETHYLENE	UG/L	1.0K

APPENDIX E

Organics Scanned in Water Samples
analyses by the
Illinois Environmental Protection Agency Laboratories

APPENDIX E

ORGANICS SCANNED IN WATER SAMPLES, WAUKEGAN RAP, 1990

(Analytical Methods are Listed According to USEPA, 1990a)

608
ALDRIN
DIELDRIN
TOTAL DDT
O,P'-DDE
P,P'-DDE
O,P'-DDD
P,P'-DDD
O,P'-DDT
P,P'-DDT
TOTAL CHLORDANE
CHLORDANE, CIS ISOMER
CHLORDANE, TRANS ISOMER
ENDRIN
METHOXYCHLOR
ALPHA-BHC
GAMMA-BHC(LINDANE)
HEXACHLOROBENZENE
TOTAL PCBS
TOXAPHENE

8279/608*
PENTACHLOROPHENOL

8260/624/601/602
CHLOROMETHANE
BROMOMETHANE
VINYL CHLORIDE
CHLOROETHANE
METHYLENE CHLORIDE

8260/624/601/602
ACETONE
TRICHLOROFLUOROMETHANE
BROMOCHLOROMETHANE
CARBON DISULFIDE
1,1-DICHLOROETHYLENE
1,1-DICHLOROETHANE
TRANS-1,2-DICHLOROETHYLENE
CIS-1,2 DICHLOROETHYLENE
CHLOROFORM
1,2 DICHLORETHANE
2 BUTANONE (MEK)
1,1,1-TRICHLOROETHANE
CARBON TETRACHLORIDE
VINYL ACETATE
DICHLOROBROMOMETHANE
1,2-DICHLOROPROPANE
CIS-1,3-DICHLOROPROPENE
TRICHLOROETHYLENE
CHLORODIBROMOMETHANE
1,1,2-TRICHLOROETHANE
BENZENE
TRANS-1,3-DICHLOROPROPENE
2-CHLOROETHYLVINYL ETHER
BROMOFORM
4-METHYL-2 PENTANONE
2-HEXANONE (MBK)
TETRACHLOROETHYLENE
1,2,2,2-TETRACHLOROETHANE
TOLUENE
CHLOROBENZENE
ETHYLBENZENE
STYRENE
XYLENE

* Gas chromatographic analysis preceded by acid extraction and esterification

APPENDIX F

Sediment Quality Analysis Data
Sampling of Waukegan Harbor Area, November 1990
Sampling and analysis by the
Illinois Environmental Protection Agency

ILLINOIS ENVIRONMENTAL PROTECTION AGENCY

PLE NUMBER : D067616
PLING POINT DESC. : SLIP NO 1 CENTRAL/WAUKEGAN HARBOR /4

ITTING SOURCE # : CZP 01 SITE # :
E COLLECTED : 901114 - TIME COLLECTED : 1145 SAMPLING PROGRAM : 28

LECTED BY : ME/CB DELIVERED BY : EPA
MENTS : WAUKEGAN RAP
DING CODE : WPDC AGENCY ROUTING : 01 UNIT CODE :
TYPE CODE : ISED SAMPLE PURPOSE CODE : - REPORTING INDICATOR : S

E RECEIVED : 901205 TIME RECEIVED : 1050 RECEIVED BY : C G
OBSERVATIONS : 1-60Z SEDIMENT TRIP BL SAM# :
ERVISORS INITIALS : JTH NOTE : K = LESS THAN VALUE

519	TOTAL PCBS	UG/KG	: 4600
333	ALDRIN	UG/KG	: 10K
383	DIELDRIN	UG/KG	: 1.0K
359	TOTAL DDT	UG/KG	: 100K
328	O,P'-DDE	UG/KG	: 10K
321	P,P'-DDE	UG/KG	: 10K
316	O,P'-DDD	UG/KG	: 10K
311	P,P'-DDD	UG/KG	: 10K
306	O,P'-DDT	UG/KG	: 10K
301	P,P'-DDT	UG/KG	: 10K
1	TOTAL CHLORDANE	UG/KG	: 20K
[illegible]	CHLORDANE,CIS ISOMER	UG/KG	: 10K
067	CHLORDANE,TRANS ISOMER	UG/KG	: 10K
393	ENDRIN	UG/KG	: 10K
481	METHOXYCHLOR	UG/KG	: 50K
276	ALPHA-BHC	UG/KG	: 10K
343	GAMMA-BHC (LINDANE)	UG/KG	: 10K
701	HEXACHLOROBENZENE	UG/KG	: 10K
413	HEPTACHLOR	UG/KG	: 10K
423	HEPTACHLOR EPOXIDE	UG/KG	: 10K
~~577~~	PHENOL P79405	~~UG/G~~ MG/KG	: 0.5K
~~273~~	BIS(2-CHLOROETHYL)ETHER P78314	~~UG/G~~	: 0.5K
~~560~~	2-CHLOROPHENOL P78906	~~UG/G~~	: 0.5K
~~560~~	1,3-DICHLOROBENZENE P78317	~~UG/G~~	: 0.5K
~~571~~	1,4-DICHLOROBENZENE P78318	~~UG/G~~	: 0.5K
~~147~~	BENZYL ALCOHOL P78302	~~UG/G~~	: 0.5K
~~530~~	1,2-DICHLOROBENZENE P78316	~~UG/G~~	: 0.5K
~~300~~	2-METHYLPHENOL P 78395	~~UG/G~~	: 0.5K
~~203~~	BIS(2-CHLOROISOPROPYL)ETHER P78326	~~UG/G~~	: 0.5K

LE NUMBER : D087615

		MG/KG
37	BUTYL BENZYL PHTHALATE P78337	UG/G : 0.5K
31	3,3'-DICHLOROBENZIDINE P78319	UG/G : 1.0K
520	BENZO(A)ANTHRACENE P78342	UG/G : 0.5K
520	CHRYSENE P78346	UG/G : 0.5K
109	BIS(2-ETHYLHEXYL)PHTHALATE P78336	UG/G : 0.69
776	DI-N-OCTYLPHTHALATE P78339	UG/G : 0.5K
230	BENZO(B)FLUORANTHENE P78344	UG/G : 0.5K
242	BENZO(K)FLUORANTHENE P78345	UG/G : 0.5K
247	BENZO(A)PYRENE P78343	UG/G : 0.5K
103	INDENO(1,2,3-CD)PYRENE P78353	UG/G : 0.5K
156	DIBENZO(AH)ANTHRACENE P78352	UG/G : 0.5K
71	BENZO(GHI)PERYLENE P78349	UG/G : 0.5K

THE FOLLOWING QUANTITATIONS ARE APPROXIMATE

ETHYL-DIMETHYL-PENTANE#	UG/G;	1.5
METHYL PENTANE#	UG/G;	0.60
TETRAMETHYL PENTANE#	UG/G;	15
C3-SUBSTITUTED BENZENE	UG/G;	0.95
C4-SUBSTITUTED BENZENE	UG/G;	6.1
C5-SUBSTITUTED BENZENE	UG/G;	2.8
ALIPHATIC HYDROCARBON	UG/G;	70
OTHER ORGANIC COMPOUNDS	UG/G;	16

NTATIVELY IDENTIFIED

.E NUMBER : 0087615

		MG/KG
70	4-METHYLPHENOL P78396	UG/G : 0.5K
78	N-NITROSO-DI-N-PROPYLAMINE P78335	UG/G : 0.5K
76	HEXACHLOROETHANE P78313	UG/G : 0.5K
77	NITROBENZENE P78332	UG/G : 0.5K
88	ISOPHORONE P78330	UG/G : 0.5K
91	2-NITROPHENOL P79403	UG/G : 0.5K
66	2,4-DIMETHYLPHENOL P79402	UG/G : 0.5K
67	BENZOIC ACID P78394	UG/G : 5.0K
75	BIS(2-CHLOROETHOXY)METHANE P78327	UG/G : 0.5K
81	2,4-DICHLOROPHENOL P79401	UG/G : 0.5K
57	1,2,4-TRICHLOROBENZENE P78311	UG/G : 0.5K
76	NAPHTHALENE P78331	UG/G : 0.5K
60	4-CHLOROANILINE P78303	UG/G : 0.5K
91	HEXACHLOROBUTADIENE P78328	UG/G : 0.5K
52	4-CHLORO-3-METHYLPHENOL P78399	UG/G : 0.5K
70	2-METHYLNAPHTHALENE P78305	UG/G : 0.5K
86	HEXACHLOROCYCLOPENTADIENE P78329	UG/G : 0.5K
01	2,4,6-TRICHLOROPHENOL P78398	UG/G : 0.5K
97	2,4,5-TRICHLOROPHENOL P78397	UG/G : 0.5K
91	2-CHLORONAPHTHALENE P78315	UG/G : 0.5K
00	2-NITROANILINE P78306	UG/G : 1.0K
71	DIMETHYLPHTHALATE P78341	UG/G : 0.5K
77	ACENAPHTHYLENE P78347	UG/G : 0.5K
20	2,6-DINITROTOLUENE P78321	UG/G : 0.5K
00	3-NITROANILINE P78307	UG/G : 1.0K
65	ACENAPHTHENE P78309	UG/G : 0.5K
72	2,4-DINITROPHENOL P79405	UG/G : 1.0K
76	4-NITROPHENOL P79404	UG/G : 1.0K
62	DIBENZOFURAN P78304	UG/G : 0.5K
31	2,4-DINITROTOLUENE P78320	UG/G : 0.5K
30	DIETHYLPHTHALATE P78340	UG/G : 0.5K
71	4-CHLOROPHENYL PHENYL ETHER P78324	UG/G : 0.5K
61	FLUORENE P78350	UG/G : 0.5K
00	4-NITROANILINE P78308	UG/G : 1.0K
00	4,6-DINITRO-2-METHYLPHENOL P79406	UG/G : 1.0K
36	4-BROMOPHENYL PHENYL ETHER P78325	UG/G : 0.5K
50	HEXACHLOROBENZENE P78312	UG/G : 0.5K
32	PENTACHLOROPHENOL P79407	UG/G : 1.0K
51	PHENANTHRENE P78351	UG/G : 0.5K
20	ANTHRACENE P78348	UG/G : 0.5K
10	DI-N-BUTYLPHTHALATE P78338	UG/G : 0.5K
76	FLUORANTHENE P78323	UG/G : 0.5K
2	PYRENE P78354	UG/G : 0.5K

ILLINOIS ENVIRONMENTAL PROTECTION AGENCY

LE NUMBER : DU87615
I'NG POINT DESC. : UPPER HARBOR WAUKEGAN HARBOR/3

..TING SOURCE # : CZC C1 SITE # :
COLLECTED : 901114 TIME COLLECTED : 1210 SAMPLING PROGRAM : 26

ECTED BY : ME/CS DELIVERED BY : EPA
ENTS : WAUKEGAN RAP
ING CODE : WP06 AGENCY ROUTING : 01 UNIT CODE :
TYPE CODE : ISED SAMPLE PURPOSE CODE : - REPORTING INDICATOR : B

RECEIVED : 901205 TIME RECEIVED : 1050 RECEIVED BY : C G
OBSERVATIONS : 1-60Z SEDIMENT TRIP SL SAM# :
RVISORS INITIALS : JTH NOTE : K = LESS THAN VALUE

19	TOTAL PCBS	UG/KG	: 9000
33	ALDRIN	UG/KG	: 10K
83	DIELDRIN	UG/KG	: 1.5K
59	TOTAL DDT	UG/KG	: 100K
23	O,P'-DDE	UG/KG	: 10K
21	P,P'-DDE	UG/KG	: 10K
16	O,P'-DDD	UG/KG	: 10K
11	P,P'-DDD	UG/KG	: 10K
06	O,P'-DDT	UG/KG	: 10K
[illegible]	P,P'-DDT	UG/KG	: 10K
	TAL CHLORDANE	UG/KG	: 20K
	CHLORDANE,CIS ISOMER	UG/KG	: 10K
67	CHLORDANE,TRANS ISOMER	UG/KG	: 10K
93	ENDRIN	UG/KG	: 10K
81	METHOXYCHLOR	UG/KG	: 50K
76	ALPHA-BHC	UG/KG	: 10K
43	GAMMA-BHC (LINDANE)	UG/KG	: 10K
01	HEXACHLOROBENZENE	UG/KG	: 10K
13	HEPTACHLOR	UG/KG	: 10K
23	HEPTACHLOR EPOXIDE	UG/KG	: 10K
~~34~~	PHENOL P79408	~~UG/G~~ MG/KG	: 0.5K
~~75~~	BIS(2-CHLOROETHYL)ETHER P78314	~~UG/G~~	: 0.5K
~~20~~	2-CHLOROPHENOL P[redacted] P78400	~~UG/G~~	: 0.5K
~~26~~	1,3-DICHLOROBENZENE P[redacted] 78317	~~UG/G~~	: 0.5K
~~31~~	1,4-DICHLOROBENZENE P[redacted] 78318	~~UG/G~~	: 0.5K
~~37~~	BENZYL ALCOHOL P[redacted] 78302	~~UG/G~~	: 0.5K
~~36~~	1,2-DICHLOROBENZENE P[redacted] 78316	~~UG/G~~	: 0.5K
00	2-METHYLPHENOL P[redacted] 78395	~~UG/G~~	: 0.5K
~~85~~	BIS(2-CHLOROISOPROPYL)ETHER P78336	~~UG/G~~	: 0.5K

LE NUMBER : D0867614

~~792~~	BUTYL BENZYL PHTHALATE P78337	~~UG/G~~	: 0.5K
~~511~~	3,3'-DICHLOROBENZIDINE P78319	~~UG/G~~	: 1.0K
520	BENZO(A)ANTHRACENE P78342	~~UG/G~~	: 0.5K
~~320~~	CHRYSENE P78346	~~UG/G~~	: 0.5K
~~100~~	BIS(2-ETHYLHEXYL)PHTHALATE P78336	~~UG/G~~	: 0.5K
~~590~~	DI-N-OCTYLPHTHALATE P78339	~~UG/G~~	: 0.5K
~~230~~	BENZO(B)FLUORANTHENE P78344	~~UG/G~~	: 0.5K
~~242~~	BENZO(K)FLUORANTHENE P78345	~~UG/G~~	: 0.5K
~~247~~	BENZO(A)PYRENE P78343	~~UG/G~~	: 0.5K
403	INDENO(1,2,3-CD)PYRENE P78353	UG/G	: 0.5K
550	DIBENZO(AH)ANTHRACENE P78352	UG/G	: 0.5K
~~327~~	BENZO(GHI)PERYLENE P78349	UG/G	: 0.5K

THE FOLLOWING QUANTITATIONS ARE APPROXIMATE

OTHER ORGANIC COMPOUNDS UG/G; 2.8

'LE NUMBER : 0087014

		MG/KG		
[illegible]	4-METHYLPHENOL P78396	UG/G	:	0.5K
	N-NITROSO-DI-N-PROPYLAMINE P78335	UG/G	:	0.5K
70	HEXACHLOROETHANE P78313	UG/G	:	0.5K
447	NITROBENZENE P78332	UG/G	:	0.5K
460	ISOPHORONE P78330	UG/G	:	0.5K
591	2-NITROPHENOL P79403	UG/G	:	0.5K
000	2,4-DIMETHYLPHENOL P79402	UG/G	:	0.5K
247	BENZOIC ACID P78394	UG/G	:	5.0K
278	BIS(2-CHLOROETHOXY)METHANE P78327	UG/G	:	0.5K
001	2,4-DICHLOROPHENOL P79401	UG/G	:	0.5K
551	1,2,4-TRICHLOROBENZENE P78311	UG/G	:	0.5K
496	NAPHTHALENE P78331	UG/G	:	0.5K
000	4-CHLOROANILINE P78303	UG/G	:	0.5K
391	HEXACHLOROBUTADIENE P78328	UG/G	:	0.5K
452	4-CHLORO-3-METHYLPHENOL P78399	UG/G	:	0.5K
410	2-METHYLNAPHTHALENE P78305	UG/G	:	0.5K
180	HEXACHLOROCYCLOPENTADIENE 78329	UG/G	:	0.5K
021	2,4,6-TRICHLOROPHENOL P 78398	UG/G	:	0.5K
067	2,4,5-TRICHLOROPHENOL P 78397	UG/G	:	0.5K
581	2-CHLORONAPHTHALENE P78315	UG/G	:	0.5K
000	2-NITROANILINE P78306	UG/G	:	1.0K
+	DIMETHYLPHTHALATE P78341	UG/G	:	0.5K
)	ACENAPHTHYLENE P78347	UG/G	:	0.5K
026	2,6-DINITROTOLUENE P78321	UG/G	:	0.5K
300	3-NITROANILINE P78307	UG/G	:	1.0K
265	ACENAPHTHENE P78309	UG/G	:	0.5K
010	2,4-DINITROPHENOL P79405	UG/G	:	1.0K
040	4-NITROPHENOL P79404	UG/G	:	1.0K
302	DIBENZOFURAN P78304	UG/G	:	0.5K
011	2,4-DINITROTOLUENE P78320	UG/G	:	0.5K
330	DIETHYLPHTHALATE P78340	UG/G	:	0.5K
041	4-CHLOROPHENYL PHENYL ETHER P78324	UG/G	:	0.5K
361	FLUORENE P78350	UG/G	:	0.5K
000	4-NITROANILINE P78308	UG/G	:	1.0K
060	4,6-DINITRO-2-METHYLPHENOL P79406	UG/G	:	1.0K
636	4-BROMOPHENYL PHENYL ETHER P78325	UG/G	:	0.5K
700	HEXACHLOROBENZENE P78312	UG/G	:	0.5K
032	PENTACHLOROPHENOL P79407	UG/G	:	1.0K
401	PHENANTHRENE P78351	UG/G	:	0.5K
220	ANTHRACENE P78348	UG/G	:	0.5K
112	DI-N-BUTYLPHTHALATE P78338	UG/G	:	0.5K
376	FLUORANTHENE P78323	UG/G	:	0.5K
19	PYRENE P78354	UG/G	:	0.5K

ILLINOIS ENVIRONMENTAL PROTECTION AGENCY

'LE NUMBER : DOE7614
.ING POINT DESC. : NORTH BEACH WAUKEGAN/2

'ITTING SOURCE # : CZN C1 SITE # :
: COLLECTED : 901114 - TIME COLLECTED : 1520 SAMPLING PROGRAM : 28

.ECTED BY : ME/C3 DELIVERED BY : EPA
IENTS : WAUKEGAN RAP
)ING CODE : WP06 AGENCY ROUTING : 01 UNIT CODE :
TYPE CODE : ISED SAMPLE PURPOSE CODE : - REPORTING INDICATOR : 6

: RECEIVED : 901205 TIME RECEIVED : 1050 RECEIVED BY : C G
OBSERVATIONS : 1-6GZ SEDIMENT TRIP BL SAM# :
:RVISORS INITIALS : JTM NOTE : K = LESS THAN VALUE

019	TOTAL PCBS	UG/KG	: 10K
133	ALDRIN	UG/KG	: 1.0K
183	DIELDRIN	UG/KG	: 1.0K
159	TOTAL DDT	UG/KG	: 10K
128	O,P'-DDE	UG/KG	: 1.0K
121	P,P'-DDE	UG/KG	: 1.0K
116	O,P'-DDD	UG/KG	: 1.0K
111	P,P'-DDD	UG/KG	: 1.0K
106	O,P'-DDT	UG/KG	: 1.0K
71	P,P'-DDT	UG/KG	: 1.0K
	TOTAL CHLORDANE	UG/KG	: 5.0K
	CHLORDANE,CIS ISOMER	UG/KG	: 2.0K
101	CHLORDANE,TRANS ISOMER	UG/KG	: 2.0K
193	ENDRIN	UG/KG	: 1.0K
181	METHOXYCHLOR	UG/KG	: 5.0K
170	ALPHA-BHC	UG/KG	: 1.0K
143	GAMMA-BHC (LINDANE)	UG/KG	: 1.0K
101	HEXACHLOROBENZENE	UG/KG	: 1.0K
113	HEPTACHLOR	UG/KG	: 1.0K
123	HEPTACHLOR EPOXIDE	UG/KG	: 1.0K
~~24~~	PHENOL P79408	~~MG/KG~~ UG/G	: 0.5K
~~175~~	BIS(2-CHLOROETHYL)ETHER P78314	~~UG/G~~	: 0.5K
~~500~~	2-CHLOROPHENOL P78400	~~UG/G~~	: 0.5K
~~560~~	1,3-DICHLOROBENZENE P78317	~~UG/G~~	: 0.5K
~~127~~	1,4-DICHLOROBENZENE P78318	~~UG/G~~	: 0.5K
~~147~~	BENZYL ALCOHOL P78202	~~UG/G~~	: 0.5K
~~136~~	1,2-DICHLOROBENZENE P78316	~~UG/G~~	: 0.5K
~~360~~	2-METHYLPHENOL P78395	~~UG/G~~	: 0.5K
~~183~~	BIS(2-CHLOROISOPROPYL)ETHER P78326	~~UG/G~~	: 0.5K

4PLE NUMBER : B0[illegible]
4PLING POINT DESC. : NEW HARBOR

1MITTING SOURCE # : OZT 01 SITE # :
COLLECTED : 901114 TIME COLLECTED : 1320 SAMPLING PROGRAM : 26

ECTED BY : CB DELIVERED BY : UPS
ENTS :
IDING CODE : WP06 AGENCY ROUTING : 01 UNIT CODE :
1 TYPE CODE : ISED SAMPLE PURPOSE CODE : 5 REPORTING INDICATOR : B

TE RECEIVED : 901204 TIME RECEIVED : 1100 RECEIVED BY : MAG
I OBSERVATIONS : TRIP BL SAM# :
'ERVISORS INITIALS : RPF NOTE : K = LESS THAN VALUE

)668	PHOSPHORUS-P.SED.	MG/KG	: 510	P00721	CYANIDE.SEDIMENT	MG/KG	: 5.1
)339	COD,SEDIMENT	MG/KG	: 23600	P00627	KJELDAHL-N, SED.	MG/KG	: 450
)322	SOLIDS,VOL SED.	%	: 2.2	P01003	ARSENIC,SEDIMENT	MG/KG	: 4
921	MERCURY,SEDIMENT	MG/KG	: 0.1K	P00938	POTASSIUM,SED.	MG/KG	: 1300
008	BARIUM,SEDIMENT	MG/KG	: 22	P01028	CADMIUM.SEDIMENT	MG/KG	: 1K
1029	CHROMIUM.SEDIMENT	MG/KG	: 15	P01043	COPPER.SEDIMENT	MG/KG	: 30
.170	IRON,SEDIMENT	MG/KG	: 12000	P01052	LEAD.SEDIMENT	MG/KG	: 10000
1053	MANGANESE,SEDMT.	MG/KG	: 24	P01068	NICKEL,SEDIMENT	MG/KG	: 400
:078	SILVER,SEDIMENT	MG/KG	: 10	P01093	ZINC,SEDIMENT	MG/KG	: 15

ILLINOIS ENVIRONMENTAL PROTECTION AGENCY

1PLE NUMBER : B017759
1PLING POINT DESC. : WAUKEGAN HARBOR CHANNEL

'MITTING SOURCE # : 0ZS 01 SITE # :
COLLECTED : 901114 - TIME COLLECTED : 1010 SAMPLING PROGRAM : 23

LECTED BY : CB DELIVERED BY : UPS
:MENTS :
'DING CODE : WP06 AGENCY ROUTING : 01 UNIT CODE :
1 TYPE CODE : ISED SAMPLE PURPOSE CODE : 5 REPORTING INDICATOR : B

E RECEIVED : 901204 TIME RECEIVED : 1100 RECEIVED BY : MAD
OBSERVATIONS : TRIP BL SAMM :
'ERVISORS INITIALS : RPF NOTE : K = LESS THAN VALUE

668	PHOSPHORUS-P,SED.	MG/KG	428	P00721	CYANIDE.SEDIMENT	MG/KG	0.5[illegible]
339	COD,SEDIMENT	MG/KG	62600	P00627	KJELDAHL-N. SED.	MG/KG	1[illegible]
322	SOLIDS,VOL SED.	%	4.8	P01003	ARSENIC.SEDIMENT	MG/KG	10
921	MERCURY,SEDIMENT	MG/KG	0.13	P00938	POTASSIUM,SED.	MG/KG	13[illegible]
008	BARIUM,SEDIMENT	MG/KG	34	P01029	CADMIUM.SEDIMENT	MG/KG	1
29	CHROMIUM,SEDIMENT	MG/KG	34	P01043	COPPER,SEDIMENT	MG/KG	50
170	IRON,SEDIMENT	MG/KG	18000	P01052	LEAD,SEDIMENT	MG/KG	60
053	MANGANESE,SEDMT.	MG/KG	480	P01068	NICKEL,SEDIMENT	MG/KG	16
078	SILVER,SEDIMENT	MG/KG	1K	P01093	ZINC,SEDIMENT	MG/KG	130

MPLE NUMBER : B017758
MPLING POINT DESC. : WAUKEGAN HARBOR

SMITTING SOURCE # : GZR 01 SITE # :
- COLLECTED : 901114 TIME COLLECTED : 1050 SAMPLING PROGRAM : 28

LECTED BY : CB DELIVERED BY : UPS
MMENTS :
NDING CODE : WP06 AGENCY ROUTING : 01 UNIT CODE :
M TYPE CODE : ISED SAMPLE PURPOSE CODE : 5 REPORTING INDICATOR : B

TE RECEIVED : 901204 TIME RECEIVED : 1100 RECEIVED BY : MAD
B OBSERVATIONS : TRIP IL SAMM :
PERVISORS INITIALS : RPF NOTE : K = LESS THAN VALUE

0668	PHOSPHORUS-P,SED.	MG/KG	202	P00721	CYANIDE,SEDIMENT	MG/KG	0.65K
0339	COD,SEDIMENT	MG/KG	24900	P00627	KJELDAHL-N, SED.	MG/KG	175
0322	SOLIDS,VOL SED.	%	4.2	P01003	ARSENIC,SEDIMENT	MG/KG	6
1921	MERCURY,SEDIMENT	MG/KG	0.1K	P00938	POTASSIUM,SED.	MG/KG	1000K
1008	BARIUM,SEDIMENT	MG/KG	27	P01028	CADMIUM,SEDIMENT	MG/KG	1K
1029	CHROMIUM,SEDIMENT	MG/KG	22	P01043	COPPER,SEDIMENT	MG/KG	26
1170	IRON,SEDIMENT	MG/KG	9000	P01052	LEAD,SEDIMENT	MG/KG	39
1053	MANGANESE,SEDMT.	MG/KG	220	P01068	NICKEL,SEDIMENT	MG/KG	9
1078	SILVER,SEDIMENT	MG/KG	1K	P01093	ZINC,SEDIMENT	MG/KG	100

IPLE NUMBER : B017757
IPLING POINT DESC. : WAUKEGAN HARBOR CENTRAL

IMITTING SOURCE # : QZQ 01 SITE # :
E COLLECTED : 901114 TIME COLLECTED : 1115 SAMPLING PROGRAM : 23

LECTED BY : CB DELIVERED BY : UPS
IMENTS :
IDING CODE : WP06 AGENCY ROUTING : 01 UNIT CODE :
I TYPE CODE : ISED SAMPLE PURPOSE CODE : 5 REPORTING INDICATOR : B

E RECEIVED : 901204 TIME RECEIVED : 1100 RECEIVED BY : MAD
I OBSERVATIONS : TRIP BL SAM# :
ERVISORS INITIALS : RPF NOTE : K = LESS THAN VALUE

668	PHOSPHORUS-P,SED.	MG/KG	: 545	P00721	CYANIDE.SEDIMENT	MG/KG	: 3.3K
339	COD,SEDIMENT	MG/KG	: 91000	P00627	KJELDAHL-N, SED.	MG/KG	: 1700
322	SOLIDS.VOL SED.	%	: 8.3	P01003	ARSENIC.SEDIMENT	MG/KG	: 23
321	MERCURY,SEDIMENT	MG/KG	: 0.34	P00938	POTASSIUM,SED.	MG/KG	: 1500
008	BARIUM,SEDIMENT	MG/KG	: 43	P01028	CADMIUM,SEDIMENT	MG/KG	: 12
029	CHROMIUM.SEDIMENT	MG/KG	: 88	P01043	COPPER,SEDIMENT	MG/KG	: 86
170	IRON,SEDIMENT	MG/KG	: 20000	P01052	LEAD,SEDIMENT	MG/KG	: 120
053	MANGANESE,SEDMT.	MG/KG	: 450	P01068	NICKEL,SEDIMENT	MG/KG	: 21
078	SILVER,SEDIMENT	MG/KG	: 1K	P01093	ZINC,SEDIMENT	MG/KG	: 210

MPLE NUMBER : B017756
MPLING POINT DESC. : WAUKEGAN HARBOR SLIP NO 1

MITTING SOURCE # : GZP 01 SITE # :
COLLECTED : 901114 TIME COLLECTED : 1145 SAMPLING PROGRAM : 28

ECTED BY : CB DELIVERED BY : UPS
MENTS :
DING CODE : WP06 AGENCY ROUTING : 01 UNIT CODE :
TYPE CODE : ISED SAMPLE PURPOSE CODE : 5 REPORTING INDICATOR : B

E RECEIVED : 901204 TIME RECEIVED : 1100 RECEIVED BY : MAD
OBSERVATIONS : TRIP BL SAMP :
ERVISORS INITIALS : RPF NOTE : K = LESS THAN VALUE

0668	PHOSPHORUS-P.SED.	MG/KG	: 350	P00721	CYANIDE.SEDIMENT	MG/KG	: 2.4
0339	COD,SEDIMENT	MG/KG	: 77648	P00627	KJELDAHL-N. SED.	MG/KG	: 3
0322	SOLIDS,VOL SED.	%	: 7.3	P01003	ARSENIC,SEDIMENT	MG/KG	: 13
0321	MERCURY.SEDIMENT	MG/KG	: 0.19	P00938	POTASSIUM,SED.	MG/KG	: 1
008	BARIUM.SEDIMENT	MG/KG	: 31	P01028	CADMIUM.SEDIMENT	MG/KG	:
029	CHROMIUM,SEDIMENT	MG/KG	: 47	P01043	COPPER,SEDIMENT	MG/KG	: 5
170	IRON,SEDIMENT	MG/KG	: 14000	P01052	LEAD,SEDIMENT	MG/KG	: 1
053	MANGANESE,SEDMT.	MG/KG	: 91	P01068	NICKEL,SEDIMENT	MG/KG	: 34
078	SILVER,SEDIMENT	MG/KG	: 13	P01093	ZINC,SEDIMENT	MG/KG	: 1

PLE NUMBER : B017755
PLING POINT DESC. : WAUKEGAN HARBOR UPPER HARBOR

MITTING SOURCE # : GZO 01 SITE # :
COLLECTED : 901114 TIME COLLECTED : 1210 SAMPLING PROGRAM : 28

LECTED BY : CB DELIVERED BY : UPS
MENTS :
DING CODE : WP06 AGENCY ROUTING : 01 UNIT CODE :
TYPE CODE : ISED SAMPLE PURPOSE CODE : 5 REPORTING INDICATOR : B

E RECEIVED : 901204 TIME RECEIVED : 1100 RECEIVED BY : MAD
OBSERVATIONS : TRIP BL SAMP :
ERVISORS INITIALS : RPF NOTE : K = LESS THAN VALUE

668	PHOSPHORUS-P,SED.	MG/KG	: 826	P00721	CYANIDE.SEDIMENT	MG/KG	: 1.2K
339	COD,SEDIMENT	MG/KG	: 117650	P00627	KJELDAHL-N, SED.	MG/KG	: 2500
322	SOLIDS.VOL SED.	%	: 9.8	P01003	ARSENIC,SEDIMENT	MG/KG	: 41
321	MERCURY,SEDIMENT	MG/KG	: 0.40	P00938	POTASSIUM,SED.	MG/KG	: 1300
008	BARIUM,SEDIMENT	MG/KG	: 52	P01028	CADMIUM,SEDIMENT	MG/KG	: 12
029	CHROMIUM,SEDIMENT	MG/KG	: 90	P01043	COPPER,SEDIMENT	MG/KG	: 180
170	IRON,SEDIMENT	MG/KG	: 26000	P01052	LEAD,SEDIMENT	MG/KG	: 140
053	MANGANESE,SEDMT.	MG/KG	: 460	P01068	NICKEL,SEDIMENT	MG/KG	: 26
078	SILVER,SEDIMENT	MG/KG	: 1K	P01093	ZINC,SEDIMENT	MG/KG	: 280

IPLE NUMBER : [illegible]
IPLING POINT DESC. : NORTH BEACH WAUKEGAN

MITTING SOURCE # : 0ZN 01 SITE # :
COLLECTED : 901114 TIME COLLECTED : 1520 SAMPLING PROGRAM : 28

CTED BY : CB DELIVERED BY : LPS
NTS :
DING CODE : WP06 AGENCY ROUTING : 01 UNIT CODE :
TYPE CODE : ISED SAMPLE PURPOSE CODE : 5 REPORTING INDICATOR : B

E RECEIVED : 901204 TIME RECEIVED : 1100 RECEIVED BY : MAD
OBSERVATIONS : TRIP BL SAMP :
ERVISORS INITIALS : RPF NOTE : K = LESS THAN VALUE

668	PHOSPHORUS-P,SED.	MG/KG	329	P00721	CYANIDE.SEDIMENT	MG/KG	0.52K
339	COD,SEDIMENT	MG/KG	39200	P00627	KJELDAHL-N. SED.	MG/KG	60K
322	SOLIDS,VOL SED.	%	2.3	P01003	ARSENIC.SEDIMENT	MG/KG	1
321	MERCURY,SEDIMENT	MG/KG	0.1K	P00938	POTASSIUM,SED.	MG/KG	1000K
008	BARIUM,SEDIMENT	MG/KG	9	P01028	CADMIUM,SEDIMENT	MG/KG	1K
029	CHROMIUM.SEDIMENT	MG/KG	4	P01043	COPPER,SEDIMENT	MG/KG	2
170	IRON,SEDIMENT	MG/KG	3200	P01052	LEAD,SEDIMENT	MG/KG	10K
053	MANGANESE,SEDMT.	MG/KG	96	P01068	NICKEL,SEDIMENT	MG/KG	5K
078	SILVER,SEDIMENT	MG/KG	1K	P01093	ZINC,SEDIMENT	MG/KG	20

PLE NUMBER : 0087616

~~1000~~	4-METHYLPHENOL P78396	MG/KG ~~UG/G~~	: 0.5K
~~1[illegible]~~	N-NITROSO-DI-N-PROPYLAMINE P78335	~~UG/G~~	: 0.5K
0	HEXACHLOROETHANE P78313	~~UG/G~~	: 0.5K
~~1447~~	NITROBENZENE P78332	~~UG/G~~	: 0.5K
~~1400~~	ISOPHORONE P78330	~~UG/G~~	: 0.5K
~~1591~~	2-NITROPHENOL P79403	~~UG/G~~	: 0.5K
~~1606~~	2,4-DIMETHYLPHENOL P79402	~~UG/G~~	: 0.5K
~~1247~~	BENZOIC ACID P78394	~~UG/G~~	: 5.0K
~~1278~~	BIS(2-CHLOROETHOXY)METHANE P78327	~~UG/G~~	: 0.5K
~~1001~~	2,4-DICHLOROPHENOL P79401	~~UG/G~~	: 0.5K
~~1551~~	1 2,4-TRICHLOROBENZENE P78311	~~UG/G~~	: 0.5K
~~1590~~	NAPHTHALENE P78331	~~UG/G~~	: 0.5K
~~1000~~	4-CHLOROANILINE P78303	~~UG/G~~	: 0.5K
~~1391~~	HEXACHLOROBUTADIENE P78328	~~UG/G~~	: 0.5K
~~1452~~	4-CHLORO-3-METHYLPHENOL P78399	~~UG/G~~	: 0.5K
~~1416~~	2-METHYLNAPHTHALENE P78305	~~UG/G~~	: 0.5K
~~1365~~	HEXACHLOROCYCLOPENTADIENE P78329	~~UG/G~~	: 0.5K
~~1021~~	2,4,6-TRICHLOROPHENOL P78398	~~UG/G~~	: 0.5K
~~1687~~	2,4,5-TRICHLOROPHENOL P78397	~~UG/G~~	: 0.5K
~~1581~~	2-CHLORONAPHTHALENE P78315	~~UG/G~~	: 0.5K
~~1000~~	2-NITROANILINE P78306	~~UG/G~~	: 1.0K
~~1341~~	DIMETHYLPHTHALATE P78341	~~UG/G~~	: 0.5K
0	ACENAPHTHYLENE P78347	~~UG/G~~	: 0.5K
~~1[illegible]~~	2,6-DINITROTOLUENE P78321	~~UG/G~~	: 0.5K
~~1[illegible]~~	3-NITROANILINE P78307	~~UG/G~~	: 1.0K
~~1265~~	ACENAPHTHENE P78309	~~UG/G~~	: 0.5K
~~1616~~	2,4-DINITROPHENOL P79405	~~UG/G~~	: 1.0K
~~1640~~	4-NITROPHENOL P79404	~~UG/G~~	: 1.0K
~~1302~~	DIBENZOFURAN P78304	~~UG/G~~	: 0.5K
~~1611~~	2,4-DINITROTOLUENE P78320	~~UG/G~~	: 0.5K
~~1330~~	DIETHYLPHTHALATE P78340	~~UG/G~~	: 0.5K
~~1341~~	4-CHLOROPHENYL PHENYL ETHER P78324	~~UG/G~~	: 0.5K
~~1381~~	FLUORENE P78350	~~UG/G~~	: 0.5K
~~1300~~	4-NITROANILINE P78308	~~UG/G~~	: 1.0K
~~1000~~	4,6-DINITRO-2-METHYLPHENOL P79406	~~UG/G~~	: 1.0K
~~1050~~	4-BROMOPHENYL PHENYL ETHER P78325	~~UG/G~~	: 0.5K
~~1700~~	HEXACHLOROBENZENE P78312	~~UG/G~~	: 0.5K
~~1332~~	PENTACHLOROPHENOL P79407	~~UG/G~~	: 1.0K
~~1461~~	PHENANTHRENE P78351	~~UG/G~~	: 0.5K
~~1220~~	ANTHRACENE P78348	~~UG/G~~	: 0.5K
~~1116~~	DI-N-BUTYLPHTHALATE P78338	~~UG/G~~	: 0.5K
~~1376~~	FLUORANTHENE P78323	~~UG/G~~	: 0.62
7	PYRENE P78354	~~UG/G~~	: 0.65

SPLE NUMBER : [illegible]

~~34292~~	BUTYL BENZYL PHTHALATE P78337	MG/KG ~~UG/G~~	: 0.5K
~~31~~	3,3'-DICHLOROBENZIDINE P78319	~~UG/G~~	: 1.0K
26	BENZO(A)ANTHRACENE P78342	~~UG/G~~	: 0.5K
~~28~~	CHRYSENE P78346	~~UG/G~~	: 0.5K
~~39100~~	BIS(2-ETHYLHEXYL)PHTHALATE P78336	~~UG/G~~	: 0.5K
~~34596~~	DI-N-OCTYLPHTHALATE P78339	~~UG/G~~	: 0.5K
~~34230~~	BENZO(B)FLUORANTHENE P78344	~~UG/G~~	: 0.5K
~~34242~~	BENZO(K)FLUORANTHENE P78345	~~UG/G~~	: 0.5K
~~34247~~	BENZO(A)PYRENE P78343	~~UG/G~~	: 0.5K
~~34403~~	INDENO(1,2,3-CD)PYRENE P78353	~~UG/G~~	: 0.5K
~~34550~~	DIBENZO(AH)ANTHRACENE P78352	~~UG/G~~	: 0.5K
~~34521~~	BENZO(GHI)PERYLENE P78349	~~UG/G~~	: 0.5K

: THE FOLLOWING QUANTITATIONS ARE APPROXIMATE

METHYL NAPHTHALENE#	UG/G;	0.71
DIMETHYL NAPHTHALENE#	UG/G;	0.78
METHYL PENTANE#	UG/G;	0.59
TETRAMETHYL PENTANE#	UG/G;	7.2
C4-SUBSTITUTED BENZENE	UG/G;	3.0
C5-SUBSTITUTED BENZENE	UG/G;	1.8
[illegible]PHATIC HYDROCARBON	UG/G;	24
[illegible]HER ORGANIC COMPOUNDS	UG/G;	9.1

TENTATIVELY IDENTIFIED

ILLINOIS ENVIRONMENTAL PROTECTION AGENCY

MPLE NUMBER : D067617
"PLING POINT DESC. : WAUKEGAN HARBOR CENTRAL/S

TTING SOURCE # : C2C 01 SITE # :
TE COLLECTED : 901114 - TIME COLLECTED : 1115 SAMPLING PROGRAM : 26

LLECTED BY : ME/CB DELIVERED BY : EPA
MMENTS : WAUKEGAN RAP
NDING CODE : WPO6 AGENCY ROUTING : 01 UNIT CODE :
M TYPE CODE : ISED SAMPLE PURPOSE CODE : - REPORTING INDICATOR : S

TE RECEIVED : 901205 TIME RECEIVED : 1050 RECEIVED BY : C G
B OBSERVATIONS : 1-OOZ SEDIMENT TRIP BL SAM# :
PERVISORS INITIALS : JTH NOTE : K = LESS THAN VALUE

9519	TOTAL PCBS	UG/KG	: 1900
9333	ALDRIN	UG/KG	: 10K
9363	DIELDRIN	UG/KG	: 1.0K
9359	TOTAL DDT	UG/KG	: 100K
9328	O,P'-DDE	UG/KG	: 10K
9321	P,P'-DDE	UG/KG	: 10K
9316	O,P'-DDD	UG/KG	: 10K
9311	P,P'-DDD	UG/KG	: 10K
9306	O,P'-DDT	UG/KG	: 10K
9301	P,P'-DDT	UG/KG	: 10K
[illegible]1	TOTAL CHLORDANE	UG/KG	: 20K
[illegible]4	CHLORDANE,CIS ISOMER	UG/KG	: 10K
9067	CHLORDANE,TRANS ISOMER	UG/KG	: 10K
9393	ENDRIN	UG/KG	: 10K
9481	METHOXYCHLOR	UG/KG	: 50K
9076	ALPHA-BHC	UG/KG	: 10K
9343	GAMMA-BHC (LINDANE)	UG/KG	: 10K
9701	HEXACHLOROBENZENE	UG/KG	: 10K
9413	HEPTACHLOR	UG/KG	: 10K
9423	HEPTACHLOR EPOXIDE	UG/KG	: 10K
~~4074~~	PHENOL P79408	~~UG/G~~ MG/KG	: 0.5K
~~4275~~	BIS(2-CHLOROETHYL)ETHER P78314	~~UG/G~~	: 0.5K
~~4580~~	2-CHLOROPHENOL P78400	~~UG/G~~	: 0.5K
~~4560~~	1,3-DICHLOROBENZENE P78317	~~UG/G~~	: 0.5K
~~4571~~	1,4-DICHLOROBENZENE P 78318	~~UG/G~~	: 0.5K
~~7147~~	BENZYL ALCOHOL P78302	~~UG/G~~	: 0.5K
~~4556~~	1,2-DICHLOROBENZENE P 78316	~~UG/G~~	: 0.5K
~~6000~~	2-METHYLPHENOL P78395	~~UG/G~~	: 0.5K
~~4283~~	BIS(2-CHLOROISOPROPYL)ETHER P78326	~~UG/G~~	: 0.5K

PLE NUMBER : 0087617

~~0000~~	-METHYLPHENOL P78396	mG/KG ~~UG/G~~	: 0.62
~~[illegible]~~	N-NITROSO-DI-N-PROPYLAMINE P78335	~~UG/G~~	: 0.5K
[illegible]	HEXACHLOROETHANE P78313	~~UG/G~~	: 0.5K
[illegible]	NITROBENZENE P78332	~~UG/G~~	: 0.5K
~~4403~~	ISOPHORONE P78330	~~UG/G~~	: 0.5K
~~4591~~	2-NITROPHENOL P79403	~~UG/G~~	: 0.5K
~~4686~~	2,4-DIMETHYLPHENOL P79402	~~UG/G~~	: 0.5K
~~7247~~	BENZOIC ACID P78394	~~UG/G~~	: 5.0K
~~4278~~	BIS(2-CHLOROETHOXY)METHANE P78327	~~UG/G~~	: 0.5K
~~4601~~	2,4-DICHLOROPHENOL P79401	~~UG/G~~	: 0.5K
~~4551~~	1,2,4-TRICHLOROBENZENE P78311	~~UG/G~~	: 0.5K
~~4696~~	NAPHTHALENE P78331	~~UG/G~~	: 0.5K
~~0000~~	4-CHLOROANILINE P78303	~~UG/G~~	: 0.5K
~~4391~~	HEXACHLOROBUTADIENE P78328	~~UG/G~~	: 0.5K
~~4452~~	4-CHLORO-3-METHYLPHENOL P78399	~~UG/G~~	: 0.5K
~~7416~~	2-METHYLNAPHTHALENE P78305	~~UG/G~~	: 0.5K
~~4386~~	HEXACHLOROCYCLOPENTADIENE P78329	~~UG/G~~	: 0.5K
~~4621~~	2,4,6-TRICHLOROPHENOL P78398	~~UG/G~~	: 0.5K
~~7587~~	2,4,5-TRICHLOROPHENOL P78397	~~UG/G~~	: 0.5K
~~4581~~	2-CHLORONAPHTHALENE P78315	~~UG/G~~	: 0.5K
~~0000~~	2-NITROANILINE P78306	~~UG/G~~	: 1.0K
~~4341~~	DIMETHYLPHTHALATE P78341	~~UG/G~~	: 0.5K
[illegible]	ACENAPHTHYLENE P78347	~~UG/G~~	: 0.5K
[illegible]	2,6-DINITROTOLUENE P78321	~~UG/G~~	: 0.5K
[illegible]	3-NITROANILINE P78307	~~UG/G~~	: 1.0K
~~4205~~	ACENAPHTHENE P78309	~~UG/G~~	: 0.5K
~~4616~~	2,4-DINITROPHENOL P79405	~~UG/G~~	: 1.0K
~~4646~~	4-NITROPHENOL P79404	~~UG/G~~	: 1.0K
~~1302~~	DIBENZOFURAN P78304	~~UG/G~~	: 0.5K
~~4611~~	2,4-DINITROTOLUENE P78320	~~UG/G~~	: 0.5K
~~4330~~	DIETHYLPHTHALATE P78340	~~UG/G~~	: 0.5K
~~4641~~	4-CHLOROPHENYL PHENYL ETHER P78324	~~UG/G~~	: 0.5K
~~4381~~	FLUORENE P78350	~~UG/G~~	: 0.5K
~~0000~~	4-NITROANILINE P78308	~~UG/G~~	: 1.0K
~~0000~~	4,6-DINITRO-2-METHYLPHENOL P79406	~~UG/G~~	: 1.0K
~~4636~~	4-BROMOPHENYL PHENYL ETHER P78325	~~UG/G~~	: 0.5K
~~9760~~	HEXACHLOROBENZENE P78312	~~UG/G~~	: 0.5K
~~9032~~	PENTACHLOROPHENOL P79407	~~UG/G~~	: 1.0K
~~4461~~	PHENANTHRENE P78351	~~UG/G~~	: 0.5K
~~4220~~	ANTHRACENE P78348	~~UG/G~~	: 0.5K
~~9110~~	DI-N-BUTYLPHTHALATE P78338	~~UG/G~~	: 0.5K
~~4376~~	FLUORANTHENE P78323	~~UG/G~~	: 0.5K
[illegible]	PYRENE P78354	~~UG/G~~	: 0.5K

.PLE NUMBER : D087617

~~292~~ BUTYL BENZYL PHTHALATE P78337	MG/KG ~~UG/G~~	: 0.5K
~~4351~~ 3,3'-DICHLOROBENZIDINE P78319	~~UG/G~~	: 1.0K
~~4526~~ BENZO(A)ANTHRACENE P78342	~~UG/G~~	: 0.5K
~~4120~~ CHRYSENE P78346	~~UG/G~~	: 0.5K
~~9100~~ BIS(2-ETHYLHEXYL)PHTHALATE P78336	~~UG/G~~	: 0.5K
~~4596~~ DI-N-OCTYLPHTHALATE P78339	~~UG/G~~	: 0.5K
~~4230~~ BENZO(B)FLUORANTHENE P78344	~~UG/G~~	: 0.5K
~~4242~~ BENZO(K)FLUORANTHENE P78345	~~UG/G~~	: 0.5K
~~4247~~ BENZO(A)PYRENE P78343	~~UG/G~~	: 0.5K
~~4403~~ INDENO(1,2,3-CD)PYRENE P78353	~~UG/G~~	: 0.5K
~~4556~~ DIBENZO(AH)ANTHRACENE P78352	~~UG/G~~	: 0.5K
~~4521~~ BENZO(GHI)PERYLENE P78349	~~UG/G~~	: 0.5K

THE FOLLOWING QUANTITATIONS ARE APPROXIMATE

C4-SUBSTITUTED BENZENE	UG/G; 1.0
ALIPHATIC HYDROCARBON	UG/G; 18
OTHER ORGANIC COMPOUNDS	UG/G; 6.9

ILLINOIS ENVIRONMENTAL PROTECTION AGENCY

MPLE NUMBER : 0087c18
MPLING POINT DESC. : WAUKEGAN HARBOR/6

- TTING SOURCE # : GZR C1 SITE # :
COLLECTED : 9C1114 TIME COLLECTED : 1050 SAMPLING PROGRAM : 25

LLECTED BY : ME/CB DELIVERED BY : EPA
MMENTS : WAUKEGAN RAP
NDING CODE : WP06 AGENCY ROUTING : 01 UNIT CODE :
M TYPE CODE : ISED SAMPLE PURPOSE CODE : - REPORTING INDICATOR : 6

TE RECEIVED : 901205 TIME RECEIVED : 10:0 RECEIVED BY : C G
B OBSERVATIONS : 1-OCZ SEDIMENT TRIP BL SAM# :
PERVISORS INITIALS : JTM NOTE : K = LESS THAN VALUE

9519	TOTAL PCBS	UG/KG	: 200
9333	ALDRIN	UG/KG	: 1.0K
9383	DIELDRIN	UG/KG	: 1.0K
9359	TOTAL DDT	UG/KG	: 10K
9326	O,P'-DDE	UG/KG	: 1.0K
9321	P,P'-DDE	UG/KG	: 1.0K
9310	O,P'-DDD	UG/KG	: 1.0K
9311	P,P'-DDD	UG/KG	: 1.0K
9306	O,P'-DDT	UG/KG	: 1.0K
9301	P,P'-DDT	UG/KG	: 1.0K
51	TOTAL CHLORDANE	UG/KG	: 5.0K
-	CHLORDANE,CIS ISOMER	UG/KG	: 2.0K
'	CHLORDANE,TRANS ISOMER	UG/KG	: 2.0K
9393	ENDRIN	UG/KG	: 1.0K
9461	METHOXYCHLOR	UG/KG	: 5.0K
9070	ALPHA-BHC	UG/KG	: 1.0K
9343	GAMMA-BHC (LINDANE)	UG/KG	: 1.0K
9701	HEXACHLOROBENZENE	UG/KG	: 1.0K
9413	HEPTACHLOR	UG/KG	: 1.0K
9423	HEPTACHLOR EPOXIDE	UG/KG	: 1.0K
~~9094~~	PHENOL P79408	~~UG/KG~~ MG/KG	: 0.5K
~~9275~~	BIS(2-CHLOROETHYL)ETHER P78314	~~UG/KG~~	: 0.5K
~~9366~~	2-CHLOROPHENOL P78400	~~UG/KG~~	: 0.5K
~~9366~~	1,3-DICHLOROBENZENE P78317	~~UG/KG~~	: 0.5K
~~9273~~	1,4-DICHLOROBENZENE P78318	~~UG/KG~~	: 0.5K
~~9147~~	BENZYL ALCOHOL P78302	~~UG/KG~~	: 0.5K
~~9330~~	1,2-DICHLOROBENZENE P78316	~~UG/KG~~	: 0.5K
~~9080~~	2-METHYLPHENOL P78395	~~UG/KG~~	: 0.5K
~~9265~~	BIS(2-CHLOROISOPROPYL)ETHER P78326	~~UG/KG~~	: 0.5K

PLE NUMBER : D087618

		UG/KG
6000	4-METHYLPHENOL P78396	UG/G : 0.5K
20	N-NITROSO-DI-N-PROPYLAMINE P78335	UG/G : 0.5K
90	HEXACHLORCETHANE P78313	UG/G : 0.5K
4447	NITROBENZENE P78332	UG/G : 0.5K
4700	ISOPHORONE P78330	UG/G : 0.5K
4501	2-NITROPHENOL P79403	UG/G : 0.5K
4606	2,4-DIMETHYLPHENOL P79402	UG/G : 0.5K
7247	BENZOIC ACID P78394	UG/G : 5.0K
4278	BIS(2-CHLOROETHOXY)METHANE P78327	UG/G : 0.5K
4401	2,4-DICHLOROPHENOL P79401	UG/G : 0.5K
4561	1,2,4-TRICHLOROBENZENE P78311	UG/G : 0.5K
4670	NAPHTHALENE P78331	UG/G : 0.5K
0200	4-CHLOROANILINE P78303	UG/G : 0.5K
4321	HEXACHLOROBUTADIENE P78328	UG/G : 0.5K
4452	4-CHLORO-3-METHYLPHENOL P78399	UG/G : 0.5K
7446	2-METHYLNAPHTHALENE P78305	UG/G : 0.5K
4730	HEXACHLOROCYCLOPENTADIENE P78329	UG/G : 0.5K
4861	2,4,6-TRICHLOROPHENOL P78318	UG/G : 0.5K
7027	2,4,5-TRICHLOROPHENOL P78397	UG/G : 0.5K
4701	2-CHLORONAPHTHALENE P78315	UG/G : 0.5K
0000	2-NITROANILINE P78306	UG/G : 1.0K
4341	DIMETHYLPHTHALATE P78341	UG/G : 0.5K
30	ACENAPHTHYLENE P78347	UG/G : 0.5K
526	2,6-DINITROTOLUENE P78321	UG/G : 0.5K
0000	3-NITROANILINE P78307	UG/G : 1.0K
4765	ACENAPHTHENE P78309	UG/G : 0.5K
4860	2,4-DINITROPHENOL P79405	UG/G : 1.0K
4860	4-NITROPHENOL P79404	UG/G : 1.0K
4302	DIBENZOFURAN P78304	UG/G : 0.5K
4861	2,4-DINITROTOLUENE P78320	UG/G : 0.5K
4730	DIETHYLPHTHALATE P78340	UG/G : 0.5K
4441	4-CHLOROPHENYL PHENYL ETHER P78324	UG/G : 0.5K
4701	FLUORENE P78350	UG/G : 0.5K
0000	4-NITROANILINE P78308	UG/G : 1.0K
0000	4,6-DINITRO-2-METHYLPHENOL P79406	UG/G : 1.0K
4636	4-BROMOPHENYL PHENYL ETHER P78325	UG/G : 0.5K
9760	HEXACHLOROBENZENE P78312	UG/G : 0.5K
7932	PENTACHLOROPHENOL P79407	UG/G : 1.0K
4461	PHENANTHRENE P78351	UG/G : 0.5K
4520	ANTHRACENE P78348	UG/G : 0.5K
4140	DI-N-BUTYLPHTHALATE P78338	UG/G : 0.5K
4370	FLUORANTHENE P78323	UG/G : 0.66
49	PYRENE P78354	UG/G : 0.63

PLE NUMBER : 0037o18

		MG/KG	
~~4292~~	BUTYL BENZYL PHTHALATE P78337	~~UG/G~~	: 0.5K
7	3,3'-DICHLOROBENZIDINE P78319	~~UG/G~~	: 1.0K
5	BENZO(A)ANTHRACENE P78342	~~UG/G~~	: 0.5K
~~a...~~	CHRYSENE P78346	~~UG/G~~	: 0.5K
~~7100~~	BIS(2-ETHYLHEXYL)PHTHALATE P78336	~~UG/G~~	: 0.5K
~~7370~~	DI-N-OCTYLPHTHALATE P78339	~~UG/G~~	: 0.5K
~~7230~~	BENZO(B)FLUORANTHENE P78344	~~UG/G~~	: 0.5K
~~7241~~	BENZO(K)FLUORANTHENE P78345	~~UG/G~~	: 0.5K
~~7247~~	BENZO(A)PYRENE P78343	~~UG/G~~	: 0.5K
~~7683~~	INDENO(1,2,3-CD)PYRENE P78353	~~UG/G~~	: 0.5K
~~7350~~	DIBENZO(AH)ANTHRACENE P78352	~~UG/G~~	: 0.5K
~~7364~~	BENZO(GHI)PERYLENE P78349	~~UG/G~~	: 0.5K

THE FOLLOWING QUANTITATIONS ARE APPROXIMATE

ALIPHATIC KETONE	UG/G;	0.55
ALIPHATIC HYDROCARBON	UG/G;	1.6
OTHER ORGANIC COMPOUNDS	UG/G;	0.63

ILLINOIS ENVIRONMENTAL PROTECTION AGENCY

MPLE NUMBER : DO87619
MPLING POINT DESC. : WAUKEGAN HARBOR CHANNEL/7

: TTING SOURCE # : 625 C1 SITE # :
TE COLLECTED : 901114 TIME COLLECTED : 1010 SAMPLING PROGRAM : 2E

LLECTED BY : ME/CB DELIVERED BY : EPA
MMENTS : WAUKEGAN RAP
NDING CODE : WP06 AGENCY ROUTING : 01 UNIT CODE :
M TYPE CODE : ISED SAMPLE PURPOSE CODE : - REPORTING INDICATOR : S

TE RECEIVED : 901205 TIME RECEIVED : 1050 RECEIVED BY : C G
B OBSERVATIONS : 1-60Z SEDIMENT TRIP BL SAM# :
PERVISORS INITIALS : JTH NOTE : K = LESS THAN VALUE

9519	TOTAL PCBS	UG/KG : 260
9333	ALDRIN	UG/KG : 1.0K
9383	DIELDRIN	UG/KG : 1.0K
9359	TOTAL DDT	UG/KG : 10K
9328	O,P'-DDE	UG/KG : 1.0K
9321	P,P'-DDE	UG/KG : 1.0K
9316	O,P'-DDD	UG/KG : 1.0K
9311	P,P'-DDD	UG/KG : 1.0K
9306	O,P'-DDT	UG/KG : 1.0K
9301	P,P'-DDT	UG/KG : 1.0K
1	TOTAL CHLORDANE	UG/KG : 5.0K
	CHLORDANE,CIS ISOMER	UG/KG : 2.0K
	CHLORDANE,TRANS ISOMER	UG/KG : 2.0K
9393	ENDRIN	UG/KG : 1.0K
9421	METHOXYCHLOR	UG/KG : 5.0K
9076	ALPHA-BHC	UG/KG : 1.0K
9343	GAMMA-BHC (LINDANE)	UG/KG : 1.0K
9701	HEXACHLOROBENZENE	UG/KG : 1.0K
9413	HEPTACHLOR	UG/KG : 1.0K
9423	HEPTACHLOR EPOXIDE	UG/KG : 1.0K
~~694~~	PHENOL P79408	~~UG/G~~ MG/KG : 0.5K
~~273~~	BIS(2-CHLOROETHYL)ETHER P78314	~~UG/G~~ : 0.5K
~~580~~	2-CHLOROPHENOL P78400	~~UG/G~~ : 0.5K
~~306~~	1,3-DICHLOROBENZENE P78317	~~UG/G~~ : 0.5K
~~371~~	1,4-DICHLOROBENZENE P78318	~~UG/G~~ : 0.5K
~~2147~~	BENZYL ALCOHOL P78302	~~UG/G~~ : 0.5K
~~530~~	1,2-DICHLOROBENZENE P78316	~~UG/G~~ : 0.5K
~~3080~~	2-METHYLPHENOL P78395	~~UG/G~~ : 0.5K
~~233~~	BIS(2-CHLOROISOPROPYL)ETHER P78320	~~UG/G~~ : 0.5K

PLE NUMBER : 0U07019

~~0000~~	4-METHYLPHENOL P78396	MG/KG ~~UG/G~~	: 0.5K
~~428~~	N-NITROSO-DI-N-PROPYLAMINE P78335	~~UG/G~~	: 0.5K
~~96~~	HEXACHLOROETHANE P78313	~~UG/G~~	: 0.5K
~~47~~	NITROBENZENE P78332	~~UG/G~~	: 0.5K
~~4403~~	ISOPHORONE P78330	~~UG/G~~	: 0.5K
~~4391~~	2-NITROPHENOL P79403	~~UG/G~~	: 0.5K
~~4606~~	2,4-DIMETHYLPHENOL P79402	~~UG/G~~	: 0.5K
~~7247~~	BENZOIC ACID P78394	~~UG/G~~	: 5.0K
~~4270~~	BIS(2-CHLOROETHOXY)METHANE P78327	~~UG/G~~	: 0.5K
~~4601~~	2,4-DICHLOROPHENOL P79401	~~UG/G~~	: 0.5K
~~4551~~	1,2,4-TRICHLOROBENZENE P78311	~~UG/G~~	: 0.5K
~~4696~~	NAPHTHALENE P78331	~~UG/G~~	: 0.5K
~~0000~~	4-CHLOROANILINE P78303	~~UG/G~~	: 0.5K
~~4391~~	HEXACHLOROBUTADIENE P78328	~~UG/G~~	: 0.5K
~~4452~~	4-CHLORO-3-METHYLPHENOL P78399	~~UG/G~~	: 0.5K
~~7416~~	2-METHYLNAPHTHALENE P78305	~~UG/G~~	: 0.5K
~~4386~~	HEXACHLOROCYCLOPENTADIENE P78329	~~UG/G~~	: 0.5K
~~4621~~	2,4,6-TRICHLOROPHENOL P78398	~~UG/G~~	: 0.5K
~~7687~~	2,4,5-TRICHLOROPHENOL P78397	~~UG/G~~	: 0.5K
~~4581~~	2-CHLORONAPHTHALENE P78315	~~UG/G~~	: 0.5K
~~0000~~	2-NITROANILINE P78306	~~UG/G~~	: 1.0K
~~4341~~	DIMETHYLPHTHALATE P78341	~~UG/G~~	: 0.5K
~~00~~	ACENAPHTHYLENE P78347	~~UG/G~~	: 0.5K
~~26~~	2,6-DINITROTOLUENE P78321	~~UG/G~~	: 0.5K
~~6300~~	3-NITROANILINE P78307	~~UG/G~~	: 1.0K
~~4205~~	ACENAPHTHENE P78309	~~UG/G~~	: 0.5K
~~4616~~	2,4-DINITROPHENOL P79405	~~UG/G~~	: 1.0K
~~4646~~	4-NITROPHENOL P79404	~~UG/G~~	: 1.0K
~~1302~~	DIBENZOFURAN P78304	~~UG/G~~	: 0.5K
~~4611~~	2,4-DINITROTOLUENE ~~[illegible]~~ P78320	~~UG/G~~	: 0.5K
~~4336~~	DIETHYLPHTHALATE P78340	~~UG/G~~	: 0.5K
~~4541~~	4-CHLOROPHENYL PHENYL ETHER P78324	~~UG/G~~	: 0.5K
~~4361~~	FLUORENE P78350	~~UG/G~~	: 0.5K
~~0000~~	4-NITROANILINE P78308	~~UG/G~~	: 1.0K
~~6000~~	4,6-DINITRO-2-METHYLPHENOL P79406	~~UG/G~~	: 1.0K
~~4636~~	4-BROMOPHENYL PHENYL ETHER P78325	~~UG/G~~	: 0.5K
~~9700~~	HEXACHLOROBENZENE P78313	~~UG/G~~	: 0.5K
~~9032~~	PENTACHLOROPHENOL P79407	~~UG/G~~	: 1.0K
~~4461~~	PHENANTHRENE P78351	~~UG/G~~	: 0.5K
~~4220~~	ANTHRACENE P78348	~~UG/G~~	: 0.5K
~~9113~~	DI-N-BUTYLPHTHALATE P78338	~~UG/G~~	: 0.5K
~~4376~~	FLUORANTHENE P78323	~~UG/G~~	: 0.5K
~~89~~	PYRENE P78354	~~UG/G~~	: 0.5K

IPLE NUMBER : 0C87019

~~4292~~	BUTYL BENZYL PHTHALATE P78337	MG/KG ~~UG/G~~	: 0.5K
57	3,3'-DICHLOROBENZIDINE P78319	~~UG/G~~	: 1.0K
~~4328~~	BENZO(A)ANTHRACENE P78342	~~UG/G~~	: 0.5K
~~4320~~	CHRYSENE P78346	~~UG/G~~	: 0.5K
~~7108~~	BIS(2-ETHYLHEXYL)PHTHALATE P78336	~~UG/G~~	: 1.1
~~4596~~	DI-N-OCTYLPHTHALATE P78339	~~UG/G~~	: 0.5K
~~4230~~	BENZO(B)FLUORANTHENE P78344	~~UG/G~~	: 0.5K
~~4242~~	BENZO(K)FLUORANTHENE P78345	~~UG/G~~	: 0.5K
~~4247~~	BENZO(A)PYRENE P78343	~~UG/G~~	: 0.5K
~~4403~~	INDENO(1,2,3-CD)PYRENE P78353	~~UG/G~~	: 0.5K
~~4350~~	DIBENZO(AH)ANTHRACENE P78352	~~UG/G~~	: 0.5K
~~4521~~	BENZO(GHI)PERYLENE P78349	~~UG/G~~	: 0.5K

THE FOLLOWING QUANTITATIONS ARE APPROXIMATE

ALIPHATIC HYDROCARBON	UG/G; 1.8
OTHER ORGANIC COMPOUNDS	UG/G; 1.3

ILLINOIS ENVIRONMENTAL PROTECTION AGENCY

MPLE NUMBER : 006762C
MPLING POINT DESC. : PIER S-7/SLIP 27 NEW HARBOR/8

TTING SOURCE # : GZT 01 SITE # :
TE COLLECTED : 901114 TIME COLLECTED : 1320 SAMPLING PROGRAM : 28

LECTED BY : ME/Co DELIVERED BY : EPA
MMENTS : WAUKEGAN RAP
NDING CODE : WP06 AGENCY ROUTING : 01 UNIT CODE :
M TYPE CODE : ISED SAMPLE PURPOSE CODE : - REPORTING INDICATOR : 8

TE RECEIVED : 9012C5 TIME RECEIVED : 1050 RECEIVED BY : C G
B OBSERVATIONS : 1-8OZ SEDIMENT TRIP BL SAM# :
PERVISORS INITIALS : JTM NOTE : K = LESS THAN VALUE

9519	TOTAL PCBS	UG/KG	: 37
9333	ALDRIN	UG/KG	: 1.0K
9383	DIELDRIN	UG/KG	: 1.0K
9359	TOTAL DDT	UG/KG	: 10K
9328	O,P'-DDE	UG/KG	: 1.0K
9321	P,P'-DDE	UG/KG	: 1.0K
9316	O,P'-DDD	UG/KG	: 1.0K
9311	P,P'-DDD	UG/KG	: 1.0K
9306	O,P'-DDT	UG/KG	: 1.0K
9301	P,P'-DDT	UG/KG	: 1.0K
1	TOTAL CHLORDANE	UG/KG	: 5.0K
-	CHLORDANE,CIS ISOMER	UG/KG	: 2.0K
9067	CHLORDANE,TRANS ISOMER	UG/KG	: 2.0K
9393	ENDRIN	UG/KG	: 1.0K
9481	METHOXYCHLOR	UG/KG	: 5.0K
9076	ALPHA-BHC	UG/KG	: 1.0K
9343	GAMMA-BHC (LINDANE)	UG/KG	: 1.0K
9701	HEXACHLOROBENZENE	UG/KG	: 1.0K
9413	HEPTACHLOR	UG/KG	: 1.0K
9423	HEPTACHLOR EPOXIDE	UG/KG	: 1.0K
~~6094~~	PHENOL P79408	~~UG/G~~ MG/KG	: 0.5K
~~6273~~	BIS(2-CHLOROETHYL)ETHER P78314	~~UG/G~~	: 0.5K
~~6586~~	2-CHLOROPHENOL P78400	~~UG/G~~	: 0.5K
~~6566~~	1,3-DICHLOROBENZENE P78317	~~UG/G~~	: 0.5K
~~6571~~	1,4-DICHLOROBENZENE P78318	~~UG/G~~	: 0.5K
~~7147~~	BENZYL ALCOHOL P78302	~~UG/G~~	: 0.5K
~~6536~~	1,2-DICHLOROBENZENE P78316	~~UG/G~~	: 0.5K
~~3080~~	2-METHYLPHENOL P78395	~~UG/G~~	: 0.5K
~~6283~~	BIS(2-CHLOROISOPROPYL)ETHER P78326	~~UG/G~~	: 0.5K

PLE NUMBER : 0067020

0000	4-METHYLPHENOL P78396	UG/G	: 0.5K
0725	N-NITROSO-DI-N-PROPYLAMINE P78335	UG/G	: 0.5K
70	HEXACHLOROETHANE P78313	UG/G	: 0.5K
4447	NITROBENZENE P78332	UG/G	: 0.5K
4460	ISOPHORONE P78330	UG/G	: 0.5K
4541	2-NITROPHENOL P79403	UG/G	: 0.5K
4666	2,4-DIMETHYLPHENOL P79402	UG/G	: 0.5K
7247	BENZOIC ACID P78394	UG/G	: 5.0K
4770	BIS(2-CHLOROETHOXY)METHANE P78327	UG/G	: 0.5K
4801	2,4-DICHLOROPHENOL P79401	UG/G	: 0.5K
4551	1,2,4-TRICHLOROBENZENE P78311	UG/G	: 0.5K
4696	NAPHTHALENE P78331	UG/G	: 0.5K
5000	4-CHLOROANILINE P78303	UG/G	: 0.5K
4391	HEXACHLOROBUTADIENE P78328	UG/G	: 0.5K
4952	4-CHLORO-3-METHYLPHENOL P78399	UG/G	: 0.5K
7410	2-METHYLNAPHTHALENE P78305	UG/G	: 0.5K
4300	HEXACHLOROCYCLOPENTADIENE P78329	UG/G	: 0.5K
4621	2,4,6-TRICHLOROPHENOL P78398	UG/G	: 0.5K
7087	2,4,5-TRICHLOROPHENOL P78397	UG/G	: 0.5K
4751	2-CHLORONAPHTHALENE P78315	UG/G	: 0.5K
0000	2-NITROANILINE P78306	UG/G	: 1.0K
4341	DIMETHYLPHTHALATE P78341	UG/G	: 0.5K
70	ACENAPHTHYLENE P78347	UG/G	: 0.5K
4020	2,6-DINITROTOLUENE P78321	UG/G	: 0.5K
5300	3-NITROANILINE P78307	UG/G	: 1.0K
4205	ACENAPHTHENE P78309	UG/G	: 0.5K
4010	2,4-DINITROPHENOL P79405	UG/G	: 1.0K
5050	4-NITROPHENOL P79404	UG/G	: 1.0K
4362	DIBENZOFURAN P78304	UG/G	: 0.5K
4611	2,4-DINITROTOLUENE P78320	UG/G	: 0.5K
4330	DIETHYLPHTHALATE P78340	UG/G	: 0.5K
4041	4-CHLOROPHENYL PHENYL ETHER P78324	UG/G	: 0.5K
4361	FLUORENE P78350	UG/G	: 0.5K
0000	4-NITROANILINE P78308	UG/G	: 1.0K
0000	4,6-DINITRO-2-METHYLPHENOL P79406	UG/G	: 1.0K
5030	4-BROMOPHENYL PHENYL ETHER P78325	UG/G	: 0.5K
9760	HEXACHLOROBENZENE P78313	UG/G	: 0.5K
9032	PENTACHLOROPHENOL P79407	UG/G	: 1.0K
4401	PHENANTHRENE P78351	UG/G	: 0.5K
4220	ANTHRACENE P78348	UG/G	: 0.5K
7119	DI-N-BUTYLPHTHALATE P78338	UG/G	: 0.5K
4370	FLUORANTHENE P78323	UG/G	: 0.5K
10	PYRENE P78354	UG/G	: 0.5K

PLE NUMBER : DOE7020

~~292~~	BUTYL BENZYL PHTHALATE P78337	~~UG/G~~	: 0.5K
1	3,3'-DICHLOROBENZIDINE P78319	~~UG/G~~	: 1.0K
5	BENZO(A)ANTHRACENE P78342	~~UG/G~~	: 0.5K
~~320~~	CHRYSENE P78346	~~UG/G~~	: 0.5K
7100	BIS(2-ETHYLHEXYL)PHTHALATE P78336	~~UG/G~~	: 0.5K
~~590~~	DI-N-OCTYLPHTHALATE P78339	~~UG/G~~	: 0.5K
~~230~~	BENZO(B)FLUORANTHENE P78344	~~UG/G~~	: 0.5K
~~242~~	BENZO(K)FLUORANTHENE P78345	~~UG/G~~	: 0.5K
~~247~~	BENZO(A)PYRENE P78343	~~UG/G~~	: 0.5K
~~405~~	INDENO(1,2,3-CD)PYRENE P78353	~~UG/G~~	: 0.5K
~~330~~	DIBENZO(AH)ANTHRACENE P78352	~~UG/G~~	: 0.5K
~~521~~	BENZO(GHI)PERYLENE P78349	~~UG/G~~	: 0.5K

THE FOLLOWING QUANTITATIONS ARE APPROXIMATE

OTHER ORGANIC COMPOUNDS UG/G: 9.6

IEPA, 1993
North Shore Lake Survey Water Quality Survey
(Surface Water Quality)

Locations of North Shore Lake Survey stations.

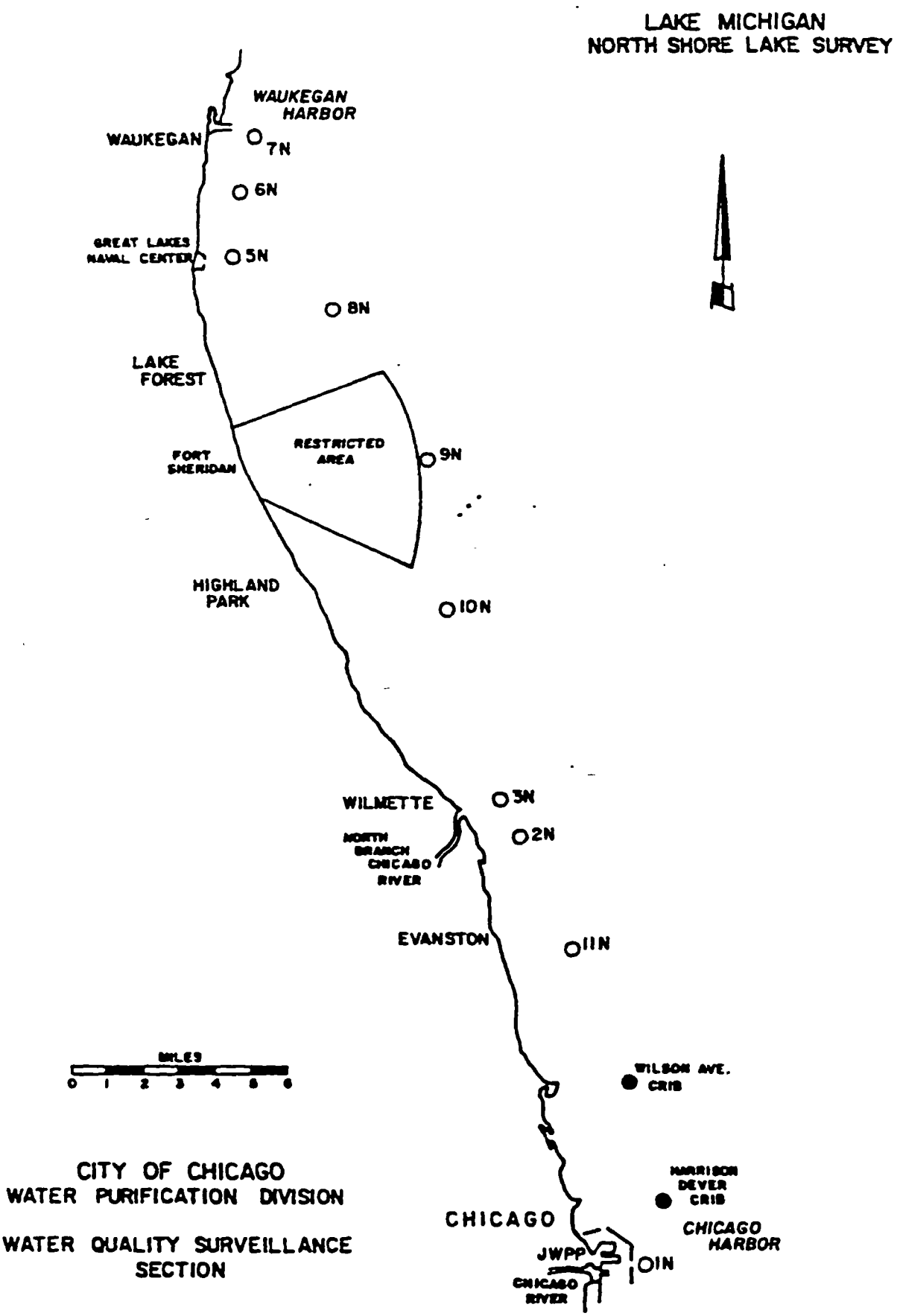

TABLE NSLS WATER QUALITY SUMMARY

PARAMETER		STORET NUMBER	STANDARD	NO. OF SAMPLES	MINIMUM	MAXIMUM	MEAN	STANDARD DEVIATION	PERCENT VIOLATION
TURBIDITY	N.T.U.	00076		70	0.35	15.00	1.78	1.94	-
ODOR, THRESHOLD	T.O.N.	00086		70	1	2	1	0	-
CONDUCTIVITY	µmhos	00095		70	253	307	274	16	-
OXYGEN DEMAND, CHEMICAL	mg/L	00335		70	0.0	9.7	2.7	3.4	-
pH		00400	7.0-9.0	70	8.3	8.6	8.4	0.1	0
RESIDUE, TOTAL NONFILTRABLE	mg/L	00530		70	0	20	3	4	-
NITROGEN, AMMONIA	mg/L	00610	0.02	70	0.00	0.06	0.02	0.02	26
NITROGEN, TOTAL KJELDAHL	mg/L	00625		70	0.10	0.56	0.30	0.11	-
NITROGEN, NITRITE-NITRATE	mg/L	00630		70	0.20	0.34	0.26	0.03	-
PHOSPHATE, TOTAL	mg/L	00650	0.021	70	0.000	0.040	0.018	0.009	19
PHOSPHATE, DISSOLVED	mg/L	00653		70	0.000	0.020	0.006	0.006	-
CHLORIDE	mg/L	00940	12.0	70	7.4	12.3	9.0	0.7	1
SULFATE	mg/L	00945	24.0	70	21.2	24.6	23.3	0.6	6
PHENOL LIKE SUBSTANCES	µg/L	32730	1.0 (a)	43	0	3	0	1	14
PLATE COUNT, 48hr.-35°C	per mL	31753		70	0	630	70	150	-
COLIFORM, TOTAL	per 100 mL	31503		70	0	14	1	3	-
COLIFORM, FECAL	per 100 mL geo. mean	31616	20 (b)	70	1	6	1	2	0
STREP, FECAL	per 100 mL	31679		70	0	8	0	1	-
FUNGI	per mL	31856		70	0	3	1	1	-
ACTINOMYCETES	per mL	80148		70	0	26	2	5	-
PLANKTON	per mL	60050		70	0	4600	1223	1120	-

City of Chicago Water Purification Division Water Quality Surveillance Section

(a) Public and Food Processing Water Supply Standard (IPCB, 1982)

(b) Geometric Mean

Appendix II-3. [illegible] WATER QUALITY SUMMARY -1990-

PARAMETER		STORET NUMBER	STANDARD	NO. OF SAMPLES	MINIMUM	MAXIMUM	MEAN	STANDARD DEVIATION	PERCENT VIOLATION
TURBIDITY	N.T.U.	00076		50	0.[illegible]	[illegible].50	1.[illegible]	1.56	-
ODOR, THRESHOLD	T.O.N.	00086		50	1	1	1	0	-
CONDUCTIVITY	umhos	00095		50	2[illegible]6	3[illegible]2	309	19	-
OXIGEN DEMAND, CHEMICAL	mg/L	00335		50	5.0	17.2	6.1	2	-
pH		00403	7.0-9.0	50	8.2	8.5	8.1	0.1	0
RESIDUE, TOTAL NONFILTRABLE	mg/L	00530		50	0	9	2	2	-
NITROGEN, AMMONIA	mg/L	00610	0.04	50	0.01	0.02	0.01	0.00	0
NITROGEN, TOTAL KJELDAHL	mg/L	00625		50	0.09	0.71	0.25	0.10	-
NITROGEN, NITRITE-NITRATE	mg/L	00630		50	0.17	0.55	0.29	0.07	-
PHOSPHATE, TOTAL	mg/L	00650	0.021	50	0.01	0.06	0.02	0.01	36
PHOSPHATE, DISSOLVED	mg/L	00653		50	0.01	0.02	0.00	0.01	-
CHLORIDE	mg/L	00940	12.0	50	8.0	12.0	9.5	0.9	0
SULFATE	mg/L	00945	24.0	50	18.5	26.1	23.2	1.7	30
PHENOL LIKE SUBSTANCES	ug/L	32730	1.0 (a)	31	1	4	2	1	42
PLATE COUNT, 48 hr. 35 C	per mL	31753		50	0	340	25	48	-
COLIFORM, TOTAL	per 100 mL	31503		50	0	44	3	8	-
COLIFORM, FECAL	per 100 mL	31616	20 (b)	50	0	14	0	2	0
STREP, FECAL	per 100 mL	31679		50	0	2	0	0	-
FUNGI	per mL	31856		50	0	16	1.4	3	-
ACTINOMYCETES	per mL	80148		50	0	22	4.3	5	-
PLANKTON	per mL	60050		50	390	6600	2122	1520	-

City of Chicago Water Purification Division Water Quality Surveillance Section

(a) Public and Food Processing Water Supply Standard
(b) Geometric Mean

Appendix II-4. NSLS WATER QUALITY SUMMARY -1991-

PARAMETER		STORET NUMBER	STANDARD	NO. OF SAMPLES	MINIMUM	MAXIMUM	MEAN	STANDARD DEVIATION	PERCENT VIOLATION
TURBIDITY	N.T.U.	00076		60	0.35	7.20	1.40	1.60	-
ODOR, THRESHOLD	T.O.N.	00086		60	1	2	1	0	-
CONDUCTIVITY	umhos	00095		60	281	299	287	4	-
OXIGEN DEMAND, CHEMICAL	mg/L	00335		60	5.0	8.6	5.2	0.7	-
pH		00403	7.0-9.0	60	8.2	8.7	8.4	0.1	0
RESIDUE, TOTAL NONFILTRABLE	mg/L	00530		60	0	7	2	2	-
NITROGEN, AMMONIA	mg/L	00610	0.02	60	0.00	0.02	0.00	0.00	0
NITROGEN, TOTAL KJELDAHL	mg/L	00625		60	0.10	0.20	0.14	0.03	-
NITROGEN, NITRITE-NITRATE	mg/L	00630		60	0.18	0.33	0.23	0.04	-
PHOSPHATE, TOTAL	mg/L	00650	0.021	60	0.010	0.028	0.010	0.009	13
PHOSPHATE, DISSOLVED	mg/L	00653		60	0.010	0.012	0.002	0.001	-
CHLORIDE	mg/L	00940	12.0	50	7.5	10.8	9.2	0.7	0
SULFATE	mg/L	00945	24.0	60	22.9	25.5	24.0	0.6	42
PHENOL LIKE SUBSTANCES	ug/L	32730	1.0 (a)	36	0	4	0	1	11
PLATE COUNT, 48 hr.-35 C	per mL	31753		60	0	550	37	98	-
COLIFORM, TOTAL	per 100 mL	31503		60	0	44	3	7	-
COLIFORM, FECAL	per 100 mL	31616	20 (b)	60	0	20	1	3	0
STREP, FECAL	per 100 mL	31679		60	0	2	0	1	-
FUNGI	per mL	31896		60	0	4	0	1	-
ACTINOMYCETES	per mL	80148		60	0	9	2	2	-
PLANKTON	per mL	60050		60	60	7900	1938	1515	-

City of Chicago Water Purification Division Water Quality Surveillance Section

(a) Public and Food Processing Water Supply Standard
(b) Geometric Mean

Appendix 11-5. 1989 NORTH SHORE L[illegible]E SURVEY SUMMARY TABLE

PARAMETER		STORET NUMBER	SURVEYS	ANNUAL MEAN									
				1N	2N	3N	5N	6N	7N	8N	9N	10N	11
TURBIDITY	N.T.U.	00076	7	3.63	1.53	1.53	1.79	1.89	2.50	1.15	1.04	1.16	1.5
ODOR, THRESHOLD	T.O.N.	00086	7	1	1	1	1	1	1	1	1	1	1
CONDUCTIVITY	µmhos	00095	7	275	276	273	275	275	275	273	271	274	275
OXYGEN DEMAND, CHEMICAL	mg/L	00335	7	2.5	1.0	1.9	2.5	3.7	3.0	4.1	2.1	3.2	3.1
pH		00400	7	8.4	8.4	8.4	8.4	8.4	8.4	8.5	8.4	8.4	8.4
RESIDUE, TOTAL NONFILTRABLE	mg/L	00530	7	5	3	2	2	3	4	1	1	1	3
NITROGEN, AMMONIA	mg/L	00610	7	0.01	0.01	0.01	0.02	0.02	0.02	0.02	0.02	0.02	0.02
NITROGEN, TOTAL KJELDAHL	mg/L	00625	7	0.28	0.27	0.25	0.30	0.31	0.34	0.30	0.28	0.30	0.32
NITROGEN, NITRITE-NITRATE	mg/L	00630	7	0.25	0.25	0.25	0.27	0.27	0.27	0.25	0.26	0.26	0.25
PHOSPHATE, TOTAL	mg/L	00650	7	0.024	0.017	0.019	0.020	0.019	0.021	0.013	0.013	0.017	0.02
PHOSPHATE, DISSOLVED	mg/L	00653	7	0.006	0.006	0.006	0.004	0.004	0.004	0.004	0.007	0.007	0.007
CHLORIDE	mg/L	00940	7	9.1	9.1	8.7	8.8	9.5	9.4	8.7	8.5	9.0	9.0
SULFATE	mg/L	00945	7	23.1	23.3	23.2	23.3	23.4	23.4	23.1	23.1	23.3	23.4
PHENOL LIKE SUBSTANCES	µg/L	32730	7	0	--	0	1	--	0	--	0	0*	0
PLATE COUNT, 48hr.-35°C	per mL	31753	7	246	99	70	56	59	35	7	4	6	122
COLIFORM, TOTAL	per 100 mL	31503	7	4	1	2	1	1	1	0	0	1	3
COLIFORM, FECAL	per 100 mL geo. mean	31616	7	2	1	1	1	1	1	1	1	1	1
STREP, FECAL	per 100 mL	31679	7	1	0	0	0	0	0	0	0	0	0
FUNGI	per mL	31856	7	1	0	1	0	1	1	0	1	0	1
ACTINOMYCETES	per mL	80148	7	2	2	0	4	4	3	0	0	1	1
PLANKTON	per mL	60050	7	1167	1897	1351	961	2017	1096	980	747	856	1156

City of Chicago Water Purification Division Water Quality Surveillance Sectio

* Only one survey was done at this station

Appendix II-6. NORTH SHORE LAKE SURVEY SUMMARY TABLE -1990-

PARAMETER	STORET NUMBER	SURVEYS	ANNUAL MEAN 1N	2N	3N	5N	6N	7N	8N	9N	10N	11N
TURBIDITY NTU	00076	5	1.70	1.51	1.56	1.95	2.89	3.58	1.04	0.98	1.02	2.99
ODOR THR. TON	00086	5	1	1	1	1	1	1	1	1	1	2
CONDUCTIVITY umhos	00095	5	308	306	308	311	313	316	311	309	307	305
OXIGEN DEMAND mg/L	00335	5	6.4	5.0	5.9	5.3	6.1	7.1	5.8	5.8	6.5	7.0
pH	00403	5	8.4	8.4	8.4	8.4	8.4	8.4	8.4	8.4	8.4	8.3
RESIDUE, TOTAL NONFILTR. mg/L	00530	5	2	2	2	2	3	5	1	1	2	4
NITROGEN AMMONIA mg/L	00610	5	0.01	0.01	0.01	0.01	0.01	0.01	0.01	0.01	0.01	0.01
NITROGEN TOTAL KJELDAHL mg/L	00625	5	0.26	0.21	0.23	0.23	0.28	0.28	0.21	0.23	0.22	0.36
NITROGEN NITRATE mg/L	00630	5	0.28	0.26	0.27	0.29	0.31	0.34	0.29	0.29	0.28	0.26
PHOSPHATE TOTAL mg/L	00650	5	0.016	0.017	0.019	0.019	0.023	0.032	0.019	0.017	0.014	0.022
PHOSPHATE DISSOLVED mg/L	00653	5	0.011	0.010	0.010	0.010	0.014	0.013	0.011	0.011	0.011	0.010
CHLORIDE mg/L	00940	5	9.7	9.7	9.5	9.3	9.7	10.1	9.1	9.2	9.1	9.9
SULFATE mg/L	00945	5	23.3	23.0	23.1	23.0	23.4	23.6	23.0	23.0	23.0	23.3
PHENOL ug/L	32730	5	2	-	2	2	2	1	-	2	-	2
PLATE COUNT 48 HR 35 C /mL	31753	5	20	16	17	17	26	89	5	8	7	41
COLIFORM TOTAL per 100mL	31501	5	0	4	3	2	1	10	0	0	0	8
COLIFORM FECAL per 100mL	31616	5	1	1	1	1	1	1	1	1	1	2
STREP, FECAL per 100mL	31679	5	0	0	0	0	0	0	0	0	0	0
FUNGI per mL	31856	5	0	0	1	1	4	5	1	1	0	1
ACTINOMYCETES per mL	00148	5	3	4	1	5	7	8	5	6	3	2
PLANKTON \ mL	60050	5	2488	2700	1210	1	2734	2830	1240	1532	1332	3760

Appendix II-7. NORTH SHORE LAKE SURVEY SUMMARY TABLE -1991-

PARAMETER	STORET NUMBER	SUR VEYS	ANNUAL MEAN 1N	2N	3N	5N	6N	7N	8N	9N	10N	11N
TURBIDITY NTU	00076	6	3.10	2.00	2.00	1.70	1.40	1.80	0.69	0.69	1.20	2.10
ODOR THR. TON	00086	6	1	1	1	1	1	1	1	1	1	1
CONDUCTIVITY umho	00095	6	207	209	208	208	208	208	207	206	206	207
OXIGEN DEMAND mg/L	00335	6	5.2	5.6	5.1	5.3	5.0	5.0	5.0	5.5	5.5	5.2
pH	00403	6	8.4	8.4	8.4	8.4	8.4	8.4	8.4	8.4	8.4	8.4
RESIDUE, TOTAL NONFILTR. mg/L	00530	5	4	-	3	2	1	2	1	1	1	2
NITROGEN AMMONIA mg/L	00610	6	0.01	0.01	0.01	0.01	0.01	0.01	0.01	0.01	0.01	0.01
NITROGEN TOTAL KJELDAHL mg/L	00625	6	0.13	0.12	0.16	0.14	0.13	0.17	0.13	0.13	0.14	0.12
NITROGEN NITRATE mg/L	00630	6	0.24	0.24	0.24	0.24	0.23	0.23	0.23	0.23	0.23	0.23
PHOSPHATE TOTAL mg/L	00650	6	0.016	0.016	0.015	0.016	0.013	0.014	0.012	0.012	0.013	0.014
PHOSPHATE DISSOLVED mg/L	00653	6	0.010	0.010	0.011	0.010	0.010	0.010	0.010	0.010	0.010	0.010
CHLORIDE mg/L	00940	5	9.9	9.3	9.4	9.0	9.0	9.0	8.9	9.0	9.1	9.6
SULFATE mg/L	00945	6	23.2	23.7	24.0	23.9	24.1	24.0	24.0	24.1	24.3	24.6
PHENOL ug/L	32730	6	2	-	1	1	-	1	-	1	1	1
PLATE COUNT 48 HR-35 C /mL	31753	6	153	11	12	14	34	100	4	8	10	20
COLIFORM TOTAL per 100mL	31503	6	13	2	2	1	4	8	0	1	0	1
COLIFORM FECAL per 100mL	31616	6	4	1	1	1	1	1	1	1	1	1
STREP, FECAL per 100mL	31679	6	1	0	0	0	0	0	0	0	0	0
FUNGI per mL	31856	6	1	0	1	1	1	0	0	1	0	0
ACTINOMYCET\mL	80148	6	2	1	0	2	2	4	2	1	1	3
PLANKTON \ mL	60050	6	3000	1287	1408	1840	763	2217	2023	2702	1543	2598

City of Chicago Water Purification Division Water Quality Surveillance Section

City of Waukegan Waterworks
Routine Monitoring of
Raw Surface Water at City Water Intakes
(Surface Water Quality)

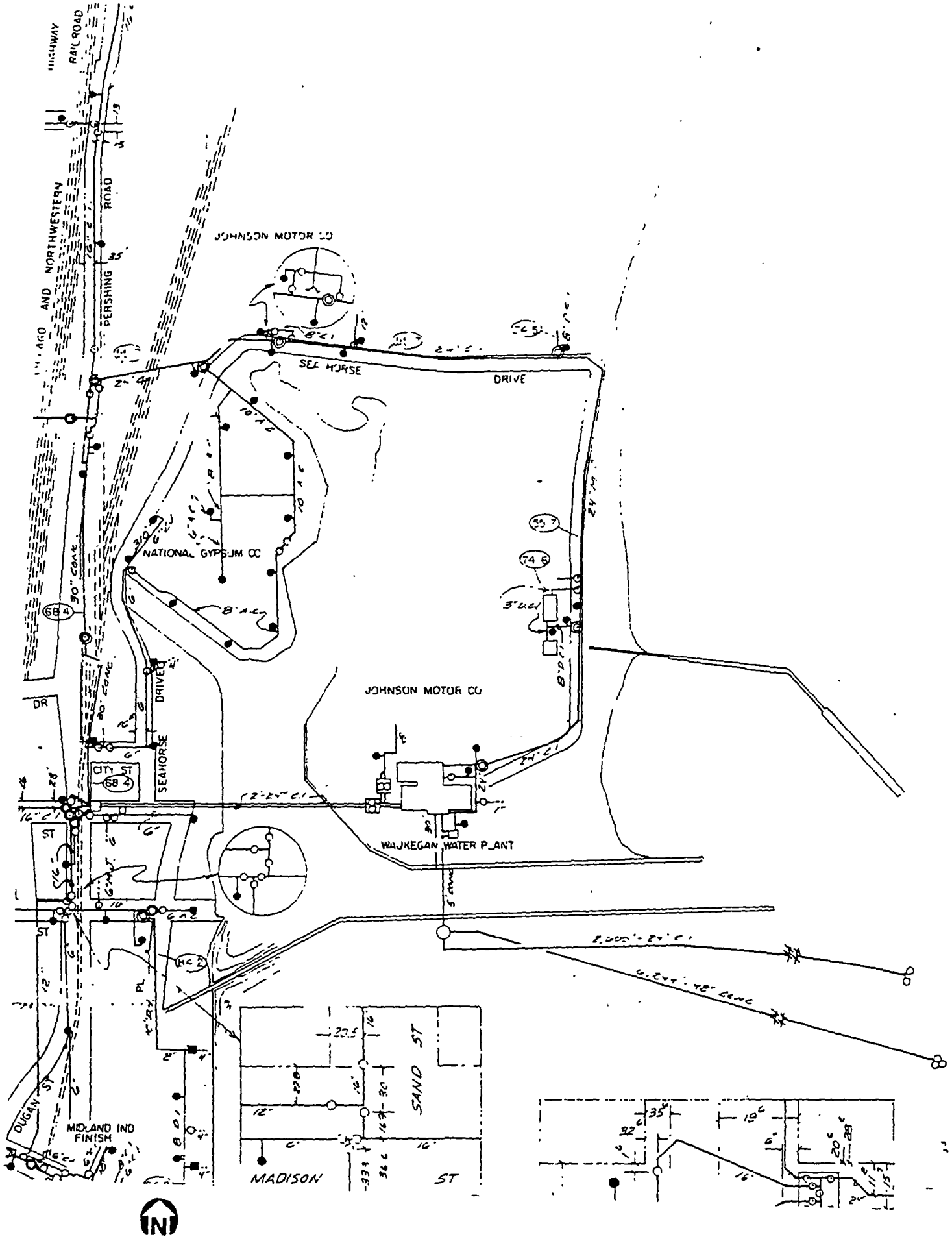

CITY OF WAUKEGAN
WATER UTILITY LOCATION

ILLINOIS ENVIRONMENTAL PROTECTION AGENCY — CHEMICAL ANALYSIS REPORT FORM

DIVISION OF PUBLIC WATER SUPPLIES

[redacted] A

1. Public Water Supply Name: Waukegan
County: Lake
3. Facility Number: 0971900
4. Mail Report to:
Name: Frank Chess
Address: City Hall, 106 North Utica St.
Post Office: Waukegan State: IL Zip Code: 60085

Samples scheduled during: MAY 05 1992
Received by: [redacted]
Date and time in Laboratory: [redacted]

5. Date and time collected: 4/29/92
6. Sample Collector: E. ABAD/Lab
7. Telephone Number:
8. Sample Type:
☐ Distribution: Sampling point address or building:
Raw (Plant)
☐ Raw-Well # ____ : Depth: ____ Year Drilled: ____
Pumping rate: ____ gpm Hours pumped: ____
☐ Raw-Surface: Inlet depth ____ ft.
Source: ____

COLLECTOR: Fill in shaded area only. Type or use black ball point pen. See reverse side for explanations and instructions.

This Agency is authorized to require this information under Ill. Rev. Stat., 1979, Chapter 111-1/2, Section 1019. Disclosure of this information is required. Failure to do so may result in a civil penalty up to $10,000.00 and an additional civil penalty up to $1,000.00 for each day the failure continues, a fine up to $1,000.00 and imprisonment up to one year. This form has been approved by the forms Management Center.

Parameter	Reported As	MAC mg/l*	Concentration mg/l*
Ammonium	N		
assium	K		
Iron	Fe	1 0	
Manganese	Mn	0.15	
Calcium	Ca		
Magnesium	Mg		
Sodium	Na		
Barium	Ba	1.	
Beryllium	Be		
Boron	B		
Cadmium	Cd	0.010	
Chromium (Total)	Cr	0.05	
Cobalt	Co		
Copper	Cu	5.	
Nickel	Ni		
Silver	Ag	0.05	
Strontium	Sr		
Vanadium	V		
:	Zn	5.	

Parameter	Reported As	MAC mg/l*	Concentration mg/l*
Fluoride	F	1.8**	
Chloride	Cl		
Nitrate + Nitrite	N	10	
Sulfate	SO_4		
Alkalinity (pH 4.5)	$CaCO_3$		
Specific Conductance @ 25°C	mmhos/cm		
Total Dissolved Solids/EC	TDS		
Filterable Residue @ 180°C	TDS		
pH	pH units		
Hardness	$CaCO_3$		
Cyanide	CN	0.2	
Soluble Silicates	SiO_2		
Arsenic	As	0.05	
Lead	Pb	0.05	
Mercury	Hg	2. µg/l	µg/l
Se[redacted]	Se	0.01	

RECEIVED
SEP 21 1992
Environmental Protection Agency
State of Illinois

-Laboratory Use Only-
E206381

* Unless Otherwise Indicated
** For those counties of the State North of and including Henderson, McDonough, Fulton, Tazewell, McLean, Ford and Iroquois the MAC is 2.0 mg/l.

Date Forwarded: SEP 17 1992 By:

ILLINOIS ENVIRONMENTAL PROTECTION AGENCY

SAMPLE NUMBER : B206391
SAMPLING POINT DESC. : WAUKEGAN PLANT

SUBMITTING SOURCE # : 0971900 SITE # :
DATE COLLECTED : 920429 TIME COLLECTED : 0000 SAMPLING PROGRAM : CH

COLLECTED BY : E ASAD DELIVERED BY : UPS
COMMENTS :
FUNDING CODE : PW3C AGENCY ROUTING : CC UNIT CODE :
SAM TYPE CODE : RPWS SAMPLE PURPOSE CODE : 5 REPORTING INDICATOR : ~~H~~

DATE RECEIVED : 920505 TIME RECEIVED : 0900 RECEIVED BY : MAD
LAB OBSERVATIONS : TRIP BL SAMP :
SUPERVISORS INITIALS : RPF NOTE : K = LESS THAN VALUE

PT 1873

P00403	PH-LABORATORY	UNITS	8.2	P00095	CONDUCTIVITY	UM/CM	293
P70300	(ROE) TDS @ 180C	MG/L	171	P00410	ALKALINITY,TOTAL	MG/L	0MM
P00900	HARDNESS,EDTATOTAL	MG/L	0MM	P00951	FLUORIDE,TOTAL	MG/L	0MM
P00940	CHLORIDE,TOTAL	MG/L	0MM	P00945	SULFATE,TOTAL	MG/L	0MM
P00630	NITRATE&NO2-NTOTAL	MG/L	0.33	P00610	AMMONIA-N,TOTAL	MG/L	0.02
P00956	SILICA,TOTAL	MG/L	1.0K	P00720	CYANIDE,TOTAL	MG/L	0.01K
P01002	ARSENIC,TOTAL	UG/L	1K	P01051	LEAD,TOT.FURNACE	UG/L	5K
P71900	MERCURY,TOTAL	UG/L	0.05K	P01147	SELENIUM,TOTAL	UG/L	1K
P00916	CALCIUM,TOTAL	MG/L	37.7	P00927	MAGNESIUM,TOTAL	MG/L	11.9
P00929	SODIUM,TOTAL	MG/L	7.1	P00937	POTASSIUM,TOTAL	MG/L	1.6
P01105	ALUMINUM,TOTAL	UG/L	150K	P01007	BARIUM,TOTAL	UG/L	18
P01022	BORON,TOTAL	UG/L	28	P01012	BERYLLIUM,TOTAL	UG/L	1K
P01027	CADMIUM,TOTAL	UG/L	5K	P01034	CHROMIUM,TOTAL	UG/L	5K
P01042	COPPER,TOTAL	UG/L	5K	P01037	COBALT,TOTAL	UG/L	10K
P01045	IRON,TOTAL	UG/L	37	P01055	MANGANESE,TOTAL	UG/L	53
P01067	NICKEL,TOTAL	UG/L	15K	P01077	SILVER,TOTAL	UG/L	5K
P01082	STRONTIUM,TOTAL	UG/L	130	P01087	VANADIUM,TOTAL	UG/L	5K
P01092	ZINC,TOTAL	UG/L	50K	P82394	HARDNESS CALC.	MG/L	142C
I17700	ANION/CATION BAL	Y/N	N	: ----> NO BALANCE <----			

Illinois Environmental Protection Agency

VOLATILE ORGANIC CHEMICAL ANALYSIS REPORT FORM

FAC # ~~0374850~~ 097-1900 Waukegan, Lake County

D053273

~~Harvey Heidinger~~ Howard Pesbator
~~Sandwich, Illinois 60548~~ Water Treatment Plant.

Samples Scheduled During: ~~1/15/87~~

Date and Time in Laboratory: JAN 27 1987

Received By: Rum

1. Mail Report To: Name: Howard Pesbator Address: City Hall - 106 N. Utica St. Post Office: Waukegan State: Il Zip Code: 60085	2. Date Collected: 1-22-87 3. Time Collected: 11:35a 4. Sample Collector: Warren Southard IEPA 5. Sampling Point: Plant Raw [redacted] Water Tap 6. Temperature: 4 4a ☐ Celcius ☐ Fahrenheit 7. pH: 8. Chlorine Residual: none Raw

COLLECTOR: Fill in shaded area only. Type or use black ball point pen. See reverse side for explanations and instructions.

PARAMETER	Concentration µg/l	PARAMETER	Concentration µg/l
methylene chloride			
1,1-dichloroethane			
dichloroethylene			
chloroform			
1,2-dichloroethane			
1,1,1-trichloroethane			
carbon tetrachloride			
dichlorobromomethane			
trichloroethylene			
dibromochloromethane			
bromoform			
tetrachloroethylene			
benzene			
toluene			
chlorobenzene			
ethylbenzene			
xylenes (total)			
dichlorobenzene			

-Laboratory Use Only-

Laboratory Number: D053273

Date Forwarded: 2-27-87 By: J Hurley

-DPWS Use Only-

MAB 3-4-82

This Agency is authorized to require this information under ILLINOIS REVISED STATUTES, 1979, Chapter 111½, Sec. 1019. Disclosure of this information is required. Failure to do so may result in a civil penalty up to $10,000.00 and an additional civil penalty up to $1,000.00 for each day the failure continues, a fine up to $1,000.00 and imprisonment up to one year. This form has been approved by the Forms Management Center.

D053273

IL 532-1310
PWS 149 2/85

ILLINOIS ENVIRONMENTAL PROTECTION AGENCY

SAMPLE NUMBER : D753273
SAMPLING POINT DESC. : WAUKEGAN/PLANT RAW/WATER TAP

SUBMITTING SOURCE # : 0971900 SITE # :
DATE COLLECTED : 870122 TIME COLLECTED : 1135 SAMPLING PROGRAM :

COLLECTED BY : MARVIN SAILLARD DELIVERED BY : MESS
COMMENTS :
FUNDING CODE : PW30 AGENCY ROUTING : 00 UNIT CODE :
SAM TYPE CODE : SAMPLE PURPOSE CODE : 0

DATE RECEIVED : 870127 TIME RECEIVED : 1000 RECEIVED BY : RWN
LAB OBSERVATIONS : 2-40ML REPORTING INDICATOR :
SUPERVISORS INITIALS : JTH NOTE : K = LESS THAN VALUE

P32106	CHLOROFORM	UG/L	1.0K
P32101	DICHLOROBROMOMETHANE	UG/L	1.0K
P32105	CHLORODIBROMOMETHANE	UG/L	1.0K
P32104	BROMOFORM	UG/L	1.0K
P34423	METHYLENE CHLORIDE	UG/L	1.0K
P34501	1.1-DICHLOROETHYLENE	UG/L	1.0K
P34496	1,1-DICHLOROETHANE	UG/L	1.0K
P34546	TRANS-1,2-DICHLOROETHYLENE	UG/L	1.0K
P77279	1,2-DICHLOROETHANE	UG/L	1.0K
P34506	1,1,1-TRICHLOROETHANE	UG/L	1.0K
P32102	CARBON TETRACHLORIDE	UG/L	1.0K
P39180	TRICHLOROETHYLENE	UG/L	1.0K
P34475	TETRACHLOROETHYLENE	UG/L	1.0K
P34301	CHLOROBENZENE	UG/L	1.0K
P34716	DICHLOROBENZENE	UG/L	1.0K
P78124	BENZENE	UG/L	1.0K
P78131	TOLUENE	UG/L	1.0K
P78113	ETHYLBENZENE	UG/L	1.0K
P81551	XYLENE	UG/L	1.0K

Illinois Environmental Protection Agency

VOLATILE ORGANIC CHEMICAL ANALYSIS REPORT FORM

Waukegan – Lake County D061009 Bottles marked Raw

Fac. No. 097-1980

R.C. 12-15-8

Samples Scheduled During:

Date and Time in Laboratory: NOV 23 1987

Received By: [illegible]

1. Mail Report To: Name: Howard Peskatn	2. Date Collected: 11/20/87
Address: City Hall, 106 N Utica St	3. Time Collected: 2:20PM
Post Office: Waukegan State: IL Zip Code: 60085	4. Sample Collector: E. ABAD
	5. Sampling Point: Raw Tap at Plant
	6. Temperature: 45 ☐ Celcius ☑ Fahrenheit
	7. pH: 8. Chlorine Residual:

COLLECTOR: Fill in shaded area only. Type or use black ball point pen. See reverse side for explanations and instructions.

PARAMETER	Concentration µg/l	PARAMETER	Concentration µg/l
methylene chloride			
1,1-dichloroethane			
dichloroethylene			
chloroform			
1,2-dichloroethane			
1,1,1-trichloroethane			
carbon tetrachloride			
dichlorobromomethane			
trichloroethylene			
dibromochloromethane			
bromoform			
tetrachloroethylene			
benzene			
toluene			
chlorobenzene			
ethylbenzene			
xylenes (total)			
dichlorobenzene			

-Laboratory Use Only-

Laboratory Number: D061009

Date Forwarded: 11-24-87 By: J Hurley

-DPWS Use Only-

This Agency is authorized to require this information under ILLINOIS REVISED STATUTES, 1979, Chapter 111½, Sec. 1019. Disclosure of this information is required. Failure to do so may result in a civil penalty up to $10,000.00 and an additional civil penalty up to $1,000.00 for each day the failure continues, a fine up to $1,000.00 and imprisonment up to one year. This form has been approved by the Forms Management Center.

IL 532-1310
PWS 149 2/85

ILLINOIS ENVIRONMENTAL PROTECTION AGENCY

SAMPLE NUMBER : D761009
SAMPLING POINT DESC. : WAUKEGAN/RAW TAP AT PLANT

SUBMITTING SOURCE # : 0971900 SITE # :
DATE COLLECTED : 871120 TIME COLLECTED : 1430 SAMPLING PROGRAM :

COLLECTED BY : E ASAD DELIVERED BY : MAIL
COMMENTS : VOC'S
FUNDING CODE : PW30 AGENCY ROUTING : -- UNIT CODE : --
SAM TYPE CODE : SAMPLE PURPOSE CODE : - REPORTING INDICATOR : E

DATE RECEIVED : 871123 TIME RECEIVED : 1000 RECEIVED BY : D V
LAB OBSERVATIONS : 2 VOC NO PRES TRIP BL SAM# : D761010
SUPERVISORS INITIALS : JTH NOTE : Y = LESS THAN VALUE

P32106	CHLOROFORM	UG/L	1.0K
P32101	DICHLOROBROMOMETHANE	UG/L	1.0K
P32105	CHLORODIBROMOMETHANE	UG/L	1.0K
P32104	BROMOFORM	UG/L	1.0K
P34423	METHYLENE CHLORIDE	UG/L	1.0K
P34501	1,1-DICHLOROETHYLENE	UG/L	1.0K
P34496	1,1-DICHLOROETHANE	UG/L	1.0K
P34546	TRANS-1,2-DICHLOROETHYLENE	UG/L	1.0K
P77379	1,2-DICHLOROETHANE	UG/L	1.0K
P34506	1,1,1-TRICHLOROETHANE	UG/L	1.0K
P32102	CARBON TETRACHLORIDE	UG/L	1.0K
P39180	TRICHLOROETHYLENE	UG/L	1.0K
P34475	TETRACHLOROETHYLENE	UG/L	1.0K
P34301	CHLOROBENZENE	UG/L	1.0K
P34716	DICHLOROBENZENE	UG/L	1.0K
P78.34	BENZENE	UG/L	1.0K
P78131	TOLUENE	UG/L	1.0K
P78113	ETHYLBENZENE	UG/L	1.0K
P81551	XYLENE	UG/L	1.0K

ILLINOIS ENVIRONMENTAL PROTECTION AGENCY

SAMPLE NUMBER : DTE1010
SAMPLING POINT DESC. : BLANK W/B1108-B1109

SUBMITTING GROUP # : 0871901 SITE # :
DATE COLLECTED : 871120 TIME COLLECTED : 1420 SAMPLING PROGRAM :

COLLECTED BY : E ABAD DELIVERED BY : MAIL
COMMENTS : VOC'S
FUNDING CODE : PL31 AGENCY ROUTING : -- UNIT CODE :
SAM TYPE CODE : SAMPLE PURPOSE CODE : - REPORTING INDICATOR : E

DATE RECEIVED : 871128 TIME RECEIVED : 1000 RECEIVED BY : D V
LAB OBSERVATIONS : 2 BLANKS TRIP BL SAM# :
SUPERVISORS INITIALS : JTH NOTE : K = LESS THAN VALUE

P32106	CHLOROFORM	UG/L	1.0K
P32101	DICHLOROBROMOMETHANE	UG/L	1.0K
P32105	CHLORODIBROMOMETHANE	UG/L	1.0K
P32104	BROMOFORM	UG/L	1.0K
P34423	METHYLENE CHLORIDE	UG/L	1.0K
P34501	1,1-DICHLOROETHYLENE	UG/L	1.0K
P34496	1,1-DICHLOROETHANE	UG/L	1.0K
P34545	TRANS-1,2-DICHLOROETHYLENE	UG/L	1.0K
P77275	1,2-DICHLOROETHANE	UG/L	1.0K
P34506	1,1,1-TRICHLOROETHANE	UG/L	1.0K
P32102	CARBON TETRACHLORIDE	UG/L	1.0K
P39180	TRICHLOROETHYLENE	UG/L	1.0K
P34475	TETRACHLOROETHYLENE	UG/L	1.0K
P34601	CHLOROBENZENE	UG/L	1.0K
P34716	DICHLOROBENZENE	UG/L	1.0K
P78124	BENZENE	UG/L	1.0K
P78131	TOLUENE	UG/L	1.0K
P78115	ETHYLBENZENE	UG/L	1.0K
P81551	XYLENE	UG/L	1.0K

4

Illinois Environmental Protection Agency

VOLATILE ORGANIC CHEMICAL ANALYSIS REPORT FORM

Bottle # 2 & 2A

Waukegan - Lake County

Fac. No. 097 1980

Samples Scheduled During: D061183

Date and Time in Laboratory:

Received By: MSB DEC 3 1987

1. Mail Report To: Name: Howard Peskator	2. Date Collected: [illegible] 3. Time Collected: 12:15 PM
Address: City Hall 106 N. Utica St.	4. Sample Collector: [illegible]
Post Office: Waukegan State: Ill. Zip Code: 60085	5. Sampling Point: [illegible]
	6. Temperature: [illegible] ☐ Celcius ☐ Fahrenheit
COLLECTOR: Fill in shaded area only. Type or use black ball point pen. See reverse side for explanations and instructions.	7. pH: [illegible] 8. Chlorine Residual: [illegible]

PARAMETER	Concentration µg/l	PARAMETER	Concentration µg/l
methylene chloride			
1,1-dichloroethane			
dichloroethylene			
chloroform			
1,2-dichloroethane			
1,1,1-trichloroethane			
carbon tetrachloride			
dichlorobromomethane			
trichloroethylene			
dibromochloromethane			
bromoform			
tetrachloroethylene			
benzene			
toluene			
chlorobenzene			
ethylbenzene			
xylenes (total)			
dichlorobenzene			

-Laboratory Use Only-

Laboratory Number: D061183

Date Forwarded: 12-18-87 By: J Hinley

-DPWS Use Only-

This Agency is authorized to require this information under ILLINOIS REVISED STATUTES, 1979, Chapter 111½, Sec. 1019. Disclosure of this information is required. Failure to do so may result in a civil penalty up to $10,000.00 and an additional civil penalty up to $1,000.00 for each day the failure continues, a fine up to $1,000.00 and imprisonment up to one year. This form has been approved by the Forms Management Center.

IL 532-1310
PWS 149 2/85

ILLINOIS ENVIRONMENTAL PROTECTION AGENCY

SAMPLE NUMBER : D761183
SAMPLING POINT DESC. : WAUKEGAN/2&2A RAW WATER

SUBMITTING SOURCE # : 0971900 SITE # :
DATE COLLECTED : 871130 TIME COLLECTED : 1215 SAMPLING PROGRAM :

COLLECTED BY : E ABAD DELIVERED BY : MAIL
COMMENTS : VOC'S
FUNDING CODE : PW30 AGENCY ROUTING : -- UNIT CODE :
SAM TYPE CODE : SAMPLE PURPOSE CODE : - REPORTING INDICATOR : B

DATE RECEIVED : 871203 TIME RECEIVED : 1000 RECEIVED BY : MSB
LAB OBSERVATIONS : 2 VOC TRIP BL SAM# : D761185
SUPERVISORS INITIALS : JTH NOTE : K = LESS THAN VALUE

P32106	CHLOROFORM	UG/L :	1.0K
P32101	DICHLOROBROMOMETHANE	UG/L :	1.0K
P32105	CHLORODIBROMOMETHANE	UG/L :	1.0K
P32104	BROMOFORM	UG/L :	1.0K
P34423	METHYLENE CHLORIDE	UG/L :	1.0K
P34501	1,1-DICHLOROETHYLENE	UG/L :	1.0K
P34496	1,1-DICHLOROETHANE	UG/L :	1.0K
P34546	TRANS-1,2-DICHLOROETHYLENE	UG/L :	1.0K
P77279	1,2-DICHLOROETHANE	UG/L :	1.0K
P34506	1,1,1-TRICHLOROETHANE	UG/L :	1.0K
P32102	CARBON TETRACHLORIDE	UG/L :	1.0K
P39180	TRICHLOROETHYLENE	UG/L :	1.0K
P34475	TETRACHLOROETHYLENE	UG/L :	1.0K
P34301	CHLOROBENZENE	UG/L :	1.0K
P34716	DICHLOROBENZENE	UG/L :	1.0K
P78124	BENZENE	UG/L :	1.0K
P78131	TOLUENE	UG/L :	1.0K
P78113	ETHYLBENZENE	UG/L :	1.0K
P81551	XYLENE	UG/L :	1.0K

1-830
MR

34

Illinois Environmental Protection Agency

VOLATILE ORGANIC CHEMICAL ANALYSIS REPORT FORM

Bottle #3 & 3A

Waukegan - Lake County

Fac No. 097 1900

L061184

Samples Scheduled During:

Date and Time in Laboratory: DEC 3 1987

Received By: MDB

1. Mail Report To: Name: Howard Pestator	2. Date Collected: [redacted]
Address: City Hall, 100 N. Grove St	3. Time Collected: [redacted]
Post Office: Waukegan State: [redacted] Zip Code: [redacted]	4. Sample Collector: [redacted]
	5. Sampling Point: [redacted] Finished Water
	6. Temperature: [redacted] ☐ Celcius ☐ Fahrenheit
	7. pH: [redacted] 8. Chlorine Residual: [redacted]

COLLECTOR: Fill in shaded area only. Type or use black ball point pen. See reverse side for explanations and instructions.

PARAMETER	Concentration µg/l	PARAMETER	Concentration µg/l
methylene chloride			
1,1-dichloroethane			
dichloroethylene			
chloroform			
1,2-dichloroethane			
1,1,1-trichloroethane			
carbon tetrachloride			
dichlorobromomethane			
trichloroethylene			
dibromochloromethane			
bromoform			
tetrachloroethylene			
benzene			
toluene			
chlorobenzene			
ethylbenzene			
xylenes (total)			
dichlorobenzene			

-Laboratory Use Only-

Laboratory Number: L061184

Date Forwarded: By:

12-18-87 [signature]

-DPWS Use Only-

This Agency is authorized to require this information under ILLINOIS REVISED STATUTES, 1979, Chapter 111½, Sec. 1019. Disclosure of this information is required. Failure to do so may result in a civil penalty up to $10,000.00 and an additional civil penalty up to $1,000.00 for each day the failure continues, a fine up to $1,000.00 and imprisonment up to one year. This form has been approved by the Forms Management Center.

IL 532-1310
PWS 149 2/86

ILLINOIS ENVIRONMENTAL PROTECTION AGENCY

SAMPLE NUMBER : D761184
SAMPLING POINT DESC. : WAUKEGAN/3&3A HARBOR WATER

SUBMITTING SOURCE # : 0971900 SITE # :
DATE COLLECTED : 871130 TIME COLLECTED : 1240 SAMPLING PROGRAM :

COLLECTED BY : E ABAD DELIVERED BY : MAIL
COMMENTS : VOC'S
FUNDING CODE : PW30 AGENCY ROUTING : -- UNIT CODE :
SAM TYPE CODE : SAMPLE PURPOSE CODE : - REPORTING INDICATOR : B

DATE RECEIVED : 871203 TIME RECEIVED : 1000 RECEIVED BY : MSB
LAB OBSERVATIONS : 2 VOC TRIP BL SAM# : D761185
SUPERVISORS INITIALS : JTH NOTE : K = LESS THAN VALUE

P32106	CHLOROFORM	UG/L :	1.0K
P32101	DICHLOROBROMOMETHANE	UG/L :	1.0K
P32105	CHLORODIBROMOMETHANE	UG/L :	1.0K
P32104	BROMOFORM	UG/L :	1.0K
P34423	METHYLENE CHLORIDE	UG/L :	1
P34501	1,1-DICHLOROETHYLENE	UG/L :	1.0K
P34496	1,1-DICHLOROETHANE	UG/L :	1.0K
P34546	TRANS-1,2-DICHLOROETHYLENE	UG/L :	1.0K
P77279	1,2-DICHLOROETHANE	UG/L :	1.0K
P34506	1,1,1-TRICHLOROETHANE	UG/L :	1.0K
P32102	CARBON TETRACHLORIDE	UG/L :	1.0K
P39180	TRICHLOROETHYLENE	UG/L :	1.0K
P34475	TETRACHLOROETHYLENE	UG/L :	1.0K
P34301	CHLOROBENZENE	UG/L :	1.0K
P34716	DICHLOROBENZENE	UG/L :	1.0K
P78124	BENZENE	UG/L :	1.0K
P78131	TOLUENE	UG/L :	1.0K
P78113	ETHYLBENZENE	UG/L :	1.0K
P81551	XYLENE	UG/L :	1.0K

1-8-88
MRL

SAMPLE NUMBER : D761185
SAMPLING POINT DESC. : BLANK W/61182-61184

SUBMITTING SOURCE # : 0971900 SITE # :
DATE COLLECTED : 871130 TIME COLLECTED : 1240 SAMPLING PROGRAM :

COLLECTED BY : E ABAD DELIVERED BY : MAIL
COMMENTS : VOC'S
FUNDING CODE : PW30 AGENCY ROUTING : -- UNIT CODE :
SAM TYPE CODE : SAMPLE PURPOSE CODE : - REPORTING INDICATOR : B

DATE RECEIVED : 871203 TIME RECEIVED : 1000 RECEIVED BY : MSB
LAB OBSERVATIONS : 1 BLANK TRIP BL SAM# :
SUPERVISORS INITIALS : JTH NOTE : K = LESS THAN VALUE

P32106	CHLOROFORM	UG/L :	1.0K
P32101	DICHLOROBROMOMETHANE	UG/L :	1.0K
P32105	CHLORODIBROMOMETHANE	UG/L :	1.0K
P32104	BROMOFORM	UG/L :	1.0K
P34423	METHYLENE CHLORIDE	UG/L :	1.0K
P34501	1,1-DICHLOROETHYLENE	UG/L :	1.0K
P34496	1,1-DICHLOROETHANE	UG/L :	1.0K
P34546	TRANS-1,2-DICHLOROETHYLENE	UG/L :	1.0K
P77279	1,2-DICHLOROETHANE	UG/L :	1.0K
P34506	1,1,1-TRICHLOROETHANE	UG/L :	1.0K
P32102	CARBON TETRACHLORIDE	UG/L :	1.0K
P39180	TRICHLOROETHYLENE	UG/L :	1.0K
P34475	TETRACHLOROETHYLENE	UG/L :	1.0K
P34301	CHLOROBENZENE	UG/L :	1.0K
P34716	DICHLOROBENZENE	UG/L :	1.0K
P78124	BENZENE	UG/L :	1.0K
P78131	TOLUENE	UG/L :	1.0K
P78113	ETHYLBENZENE	UG/L :	1.0K
P81551	XYLENE	UG/L :	1.0K

1-8-88
MRC

SAMPLE NUMBER : D761155
SAMPLING POINT DESC. : BLANKS W/61151-61154

SUBMITTING SOURCE # : 0971900 SITE # :
DATE COLLECTED : 871130 TIME COLLECTED : 1210 SAMPLING PROGRAM :

COLLECTED BY : E ABAD DELIVERED BY : MAIL
COMMENTS : VOC'S
FUNDING CODE : PW30 AGENCY ROUTING : -- UNIT CODE :
SAM TYPE CODE : SAMPLE PURPOSE CODE : - REPORTING INDICATOR : B

DATE RECEIVED : 871202 TIME RECEIVED : 1000 RECEIVED BY : D V
LAB OBSERVATIONS : 2 BLANKS TRIP BL SAM# :
SUPERVISORS INITIALS : JTH NOTE : K = LESS THAN VALUE

P32106	CHLOROFORM	UG/L	1.0K
P32101	DICHLOROBROMOMETHANE	UG/L	1.0K
P32105	CHLORODIBROMOMETHANE	UG/L	1.0K
P32104	BROMOFORM	UG/L	1.0K
P34423	METHYLENE CHLORIDE	UG/L	1.0K
P34501	1,1-DICHLOROETHYLENE	UG/L	1.0K
P34496	1,1-DICHLOROETHANE	UG/L	1.0K
P34546	TRANS-1,2-DICHLOROETHYLENE	UG/L	1.0K
P77279	1,2-DICHLOROETHANE	UG/L	1.0K
P34506	1,1,1-TRICHLOROETHANE	UG/L	1.0K
P32102	CARBON TETRACHLORIDE	UG/L	1.0K
P39180	TRICHLOROETHYLENE	UG/L	1.0K
P34475	TETRACHLOROETHYLENE	UG/L	1.0K
P34301	CHLOROBENZENE	UG/L	1.0K
P34716	DICHLOROBENZENE	UG/L	1.0K
P78124	BENZENE	UG/L	1.0K
P78131	TOLUENE	UG/L	1.0K
P78113	ETHYLBENZENE	UG/L	1.0K
P81551	XYLENE	UG/L	1.0K

1-8-88
MRL

Illinois Environmental Protection Agency · P.O. Box 19276, Springfield, IL 62794-9276

DIVISION OF PUBLIC WATER SUPPLIES — SYNTHETIC ORGANIC CHEMICALS

FACILITY: 0971900 WAUKEGAN

Return by Jan 13

SAMPLE AND DEMAND SCHEDULE: JAN 1, 1993 - JAN ~~31~~, 1993

MAIL REPORT TO:

NAME: Frank Chess, Jr. Supt — DATE COLLECTED Jan 12 1993

ADDR: 106 N. Utica St — SMPL COLLECTOR Ken Sheets

CITY: Waukegan STATE IL ZIP 60085 — PHONE NUMBER 708-360-9000-451

FUNDING CODE: PW32
SAMPLE TYPE: FPWS - FINISHED
PURPOSE: 1 - ROUTINE
SUBMIT SRCE: 097190001
SMPL PROGRAM: SO - SOC
FREQUENCY: QUARTERLY

OR BLANK SAMPLE USE PURPOSE: 8)

COLLECT WATER FROM THE FINISHED WATER/ENTRY POINT INTO THE DISTRIBUTION SYSTEM SERVED BY 01 WTP E OF SHERIDAN N OF MADISON

LOCATION: 8990I-01

TIME COLLECTED: 850A

RECEIVED
MAR 29 1993
Environmental Protection Agency
State of Illinois

--- LAB USE ONLY ---

SAMPLE NUMBER D329349

DATE RECEIVED JAN 13 1993

TIME RECEIVED UPS 9:40 AM

RECEIVED BY JB/KM

DATE FORWARDED 3-25-93 SP/JR Hurley

ILLINOIS ENVIRONMENTAL PROTECTION AGENCY

MPLE NUMBER : 0329349
MPLING POINT DESC. : WAUKEGAN/ 89901-01

SUBMITTING SOURCE # : 097190001 SITE # :
DATE COLLECTED : 930112 TIME COLLECTED : 0850 SAMPLING PROGRAM : SO

COLLECTED BY : KEN SHEETS DELIVERED BY : UPS
COMMENTS : SOCS
FUNDING CODE : PW32 AGENCY ROUTING : -- UNIT CODE :
SAM TYPE CODE : FPWS SAMPLE PURPOSE CODE : 1 REPORTING INDICATOR : B

DATE RECEIVED : 930113 TIME RECEIVED : 0940 RECEIVED BY : T B
LAB OBSERVATIONS : 8 L/2-40 ML/1 L PLAS TRIP BL SAM# : 0329350
SUPERVISORS INITIALS : JTH NOTE : K = LESS THAN VALUE

3-31-93
MAC

P81522	ETHYLENE DIBROMIDE (EDB)	UG/L :	0.01K
P38437	1,2-DIBROMO-3-CHLOROPROPANE (DBCP)	UG/L :	0.02K
P70017	HEXACHLOROCYCLOPENTADIENE	UG/L :	0.1K
P77903	DI(2-ETHYLHEXYL)ADIPATE	UG/L :	0.6K
P39107	DI(2-ETHYLHEXYL)PHTHALATE	UG/L :	0.6K
P39630	ATRAZINE	UG/L :	0.1K
P39055	SIMAZINE	UG/L :	0.07K
P77825	ALACHLOR	UG/L :	0.2K
1408	METRIBUZIN	UG/L :	0.1K
P39356	METOLACHLOR	UG/L :	0.25K
P77860	BUTACHLOR	UG/L :	0.5K
P81757	CYANAZINE	UG/L :	0.5K
P39340	LINDANE	UG/L :	0.02K
P39700	HEXACHLOROBENZENE	UG/L :	0.1K
P39410	HEPTACHLOR	UG/L :	0.04K
P39330	ALDRIN	UG/L :	0.05K
P39770	DACTHAL	UG/L :	0.5K
P39420	HEPTACHLOR EPOXIDE	UG/L :	0.02K
P39350	CHLORDANE	UG/L :	0.2K
P39380	DIELDRIN	UG/L :	0.05K
P39390	ENDRIN	UG/L :	0.01K
P39370	TOTAL DDT	UG/L :	1.0K
P30295	PROPACHLOR	UG/L :	0.5K
P39480	METHOXYCHLOR	UG/L :	0.1K
P39400	TOXAPHENE	UG/L :	1.0K
P39516	TOTAL PCB	UG/L :	0.1K
P81284	TRIFLURALIN (TREFLAN)	UG/L :	0.05K
P39730	2,4-D	UG/L :	0.1K
39032	PENTACHLOROPHENOL (PCP)	UG/L :	0.04K

MPLE NUMBER : D329349

39760	2,4,5-TP (SILVEX)	UG/L	: 0.2K
30200	DALAPON	UG/L	: 1.0K
38442	DICAMBA	UG/L	: 0.25K
30191	DINOSEB	UG/L	: 0.2K
39720	PICLORAM	UG/L	: 0.1K
39053	ALDICARB	UG/L	: 0.5K
82587	ALDICARB SULFONE	UG/L	: 0.6K
82586	ALDICARB SULFOXIDE	UG/L	: 0.5K
81405	CARBOFURAN	UG/L	: 0.9K
77700	CARBARYL	UG/L	: 1.0K
82584	3-HYDROXYCARBOFURAN	UG/L	: 1.0K
39501	METHOMYL	UG/L	: 1.0K
82613	OXAMYL	UG/L	: 3.0K
79743	GLYPHOSATE	UG/L	: 6.0K
38926	ENDOTHALL	UG/L	: 9.0K
78885	DIQUAT	UG/L	: 0.4K
34247	BENZO(A)PYRENE	UG/L	: 0.02K

WATER ANALYSIS REPORT FORM
(PESTICIDE)

E 2050

STATE OF ILLINOIS
ENVIRONMENTAL PROTECTION AGENCY
DIVISION OF PUBLIC WATER SUPPLIES

Lab. No.
Date Recd 6/26

FILL IN ALL INFORMATION COMPLETELY

CITY: WAUKEGAN
COUNTY: LAKE

MAIL REPORT TO: SUPT. HOWARD PESKATOR
STREET: 106 N. UTICA ST.
POST OFFICE: WAUKEGAN
ZIP CODE: 60085

NAME OF SUBDIVISION, INSTITUTION, STATE PROPERTY: WAUKEGAN WATER UTILITY
COLLECTED BY: R. GOLWITZER

DATE OF COLLECTION: 6-24-75
COLLECTION POINT: RAW WATER TAP

Lindane	<0.05
Heptachlor	<0.05
Aldrin	<0.05
Heptachlor Epoxide	<0.05
Alpha Chlordane	<0.05
Gamma Chlordane	<0.05
Dieldrin	<0.1
Endrin	<0.1
Methoxychlor	<0.5
o,p' -DDE	<0.1
p,p' -DDE	<0.1
o,p' -DDD	<0.1
p,p' -DDD	<0.1
o,p' -DDT	<0.1
p,p' -DDT	<0.1
Toxaphene	<5.0

Others All values expressed in micrograms per liter (ppb)

Reported from Lab. 8/26/75 By: J. Hurley

DLB:27/7/75

E 2050

WATER ANALYSIS REPORT FORM
(PESTICIDE)

STATE OF ILLINOIS
ENVIRONMENTAL PROTECTION AGENCY
DIVISION OF PUBLIC WATER SUPPLIES

Lab. No. D009045
Date Recd. NOV 17 1977

FILL IN ALL INFORMATION COMPLETELY

CITY: WAUKEGAN
COUNTY: LAKE

MAIL REPORT TO: HOWARD PESKATOR, SUPT.
STREET: 106 N. UTICA ST
POST OFFICE: WAUKEGAN, ILL.
ZIP CODE: 60085

NAME OF SUBDIVISION, INSTITUTION, STATE PROPERTY: WAUKEGAN WATER UTILITY
COLLECTED BY: KEN SHEETS

DATE OF COLLECTION: AUG. 24, 1977
COLLECTION POINT: RAW WATER TAP

Lindane	<0.05
Heptachlor	<0.05
Aldrin	<0.05
Heptachlor Epoxide	<0.05
Alpha Chlordane	<0.05
Gamma Chlordane	<0.05
Dieldrin	<0.1
Endrin	<0.1
Methoxychlor	<0.5
o,p' -DDE	<0.1
p,p' -DDE	<0.1
o,p' -DDD	<0.1
p,p' -DDD	<0.1
o,p' -DDT	<0.1
p,p' -DDT	<0.1
Toxaphene	<5.0
Others	

Reported From Lab. 11/9/77 By: J. Hurley

DLB:2/1/74

DC09045

ALL VALUES EXPRESSED IN MICROGRAMS PER LITER, (PARTS PER BILLION) NOV 21 1977

WATER ANALYSIS REPORT FORM
(PESTICIDE)

STATE OF ILLINOIS
ENVIRONMENTAL PROTECTION AGENCY
DIVISION OF PUBLIC WATER SUPPLIES

Lab. No. D0072214
Date Recd. MAR 23 1977

FILL IN ALL INFORMATION COMPLETELY

MAIL REPORT TO: WAUKEGAN WATER UTILITY
STREET: 106 N. Utica St.
POST OFFICE: Waukegan, Ill.
CITY: WAUKEGAN
COUNTY: LAKE
ZIP CODE: 60085

NAME OF SUBDIVISION, INSTITUTION, STATE PROPERTY: City -- Waukegan
COLLECTED BY: J. Nitsche

DATE OF COLLECTION: Mar. 21, '77
COLLECTION POINT: Raw water Pump station

Lindane	<0.05 ppb
Heptachlor	<0.05
Aldrin	<0.05
Heptachlor Epoxide	<0.05
Alpha Chlordane	<0.05
Gamma Chlordane	<0.05
Dieldrin	<0.1
Endrin	<0.1
Methoxychlor	<0.5
o,p' -DDE	<0.1
p,p' -DDE	<0.1
o,p' -DDD	<0.1
p,p' -DDD	<0.1
o,p' -DDT	<0.1
p,p' -DDT	<0.1
Toxaphene	<5.0

Others All values expressed as micrograms per litre (parts per billion)

Reported From Lab. 4/4/77 By: J. Hurley

DLB:2/1/74

JUN 10 1977

D0072214

WATER ANALYSIS REPORT FORM
(PESTICIDE)

D0068205

STATE OF ILLINOIS
ENVIRONMENTAL PROTECTION AGENCY
DIVISION OF PUBLIC WATER SUPPLIES

NOV 29 1976
Lab. No.
Date Recd.

FILL IN ALL INFORMATION COMPLETELY

CITY: WAUKEGAN
COUNTY: LAKE

MAIL REPORT TO: SUPT. HOWARD PESKATOR
STREET: 106 N. UTICA ST.
POST OFFICE: WAUKEGAN
ZIP CODE: 60085

NAME OF SUBDIVISION, INSTITUTION, STATE PROPERTY: WAUKEGAN WATER UTILITY
COLLECTED BY: R. GOLWITZER

DATE OF COLLECTION: 11-23-76
COLLECTION POINT: RAW WATER TAP

Lindane	< 0.05 ppb
Heptachlor	<0.05
Aldrin	<0.05
Heptachlor Epoxide	<0.05
Alpha Chlordane	<0.05
Gamma Chlordane	<0.05
Dieldrin	<0.1
Endrin	<0.1
Methoxychlor	<0.5
o,p' -DDE	<0.1
p,p' -DDE	<0.1
o,p' -DDD	<0.1
p,p' -DDD	<0.1
o,p' -DDT	<0.1
p,p' -DDT	<0.1
Toxaphene	<5.0

Others: All values expressed as micrograms per liter (parts per billion)

Reported From Lab. 1/5/77 By: J. Hurley

DLB:2/1/74

MAR 1 1 1977

D0068205

ILLINOIS ENVIRONMENTAL PROTECTION AGENCY
DIVISION OF PUBLIC WATER SUPPLIES

PESTICIDE ANALYSIS REPORT FORM

Waukegan
Howard Peskator-Water Supt.
106 N. Utica Street
Waukegan, IL 60085

0491900
Aurora D012826

Date and Time in Laboratory:

1. Mail Report to: Name: HOWARD PESKATOR, SUPT	2. Date Collected: FEB 23, 1979
Address: 106 N. UTICA ST.	3. Sample Collector: KEN SHEETS
Post Office: WAUKEGAN State: ILL Zip Code: 60085	4. Sampling Point: Surface - Raw
COLLECTOR: Fill in shaded area only. Type or use black ball point pen. See reverse side for explanations and instructions.	5. Telephone Number: 312-689-7451
	All results reported in micrograms per liter (PPB)

Parameter	µg/l	Parameter	µg/l
Lindane	<0.01	o,p' -DDE	<0.01
Heptachlor	<0.01	p,p' -DDE	<0.01
Aldrin	<0.01	o,p' -DDD	<0.01
.chlor Epoxide	<0.01	p,p' -DDD	<0.01
Alpha Chlordane	<0.01	o,p' -DDT	<0.01
Gamma Chlordane	<0.01	p,p' -DDT	<0.01
Dieldrin	<0.01	Toxaphene	<1.0
Endrin	<0.01	Silvex	–
Methoxychlor	<0.05	2,4-D	–

• Laboratory number

– IEPA Use Only –

Reported by: J. Hurley Date: 6/21/79

RECEIVED
JUL 11 1979

PWS 20 (C-78)

Waukegan
Howard Peskator-Water Supt.
106 N. Utica Street
Waukegan, IL 60085

0491900

D012286

Date and Time in Laboratory: MAR 30 1979

1. Mail Report to: Name: HOWARD PESKATOR Address: 106 N. UTICA ST Post Office: WAUKEGAN State: ILL Zip Code: 60085	2. Date Collected: MARCH 16, 1979 3. Sample Collector: KEN SHEETS 4. Sampling Point: RAW 5. Telephone Number: 312-689-7451
COLLECTOR: Fill in shaded area only. Type or use black ball point pen. See reverse side for explanations and instructions.	All results reported in micrograms per liter (PPB)

Parameter	µg/l	Parameter	µg/l
Lindane	<0.01	o,p' -DDE	<0.01
Heptachlor	<0.01	p,p' -DDE	<0.01
Aldrin	<0.01	o,p' -DDD	<0.01
Heptachlor Epoxide	<0.01	p,p' -DDD	<0.01
Alpha Chlordane	<0.01	o,p' -DDT	<0.01
Gamma Chlordane	<0.01	p,p' -DDT	<0.01
Dieldrin	<0.01	Toxaphene	<1.0
Endrin	<0.01	Silvex	<0.05
Methoxychlor	<0.05	2,4-D	<0.10
		~~PCB's~~	

Laboratory number

EPA Use Only

RECEIVED

JUL 11 1979

DIV. OF WATER SUPPLY
ENVIRONMENTAL PROTECTION AGENCY
STATE OF ILLINOIS

D012286

Reported by: J Hurley Date: 5/31/79

PWS 20 (6-73)

ILLINOIS EPA

DIVISION OF PUBLIC WATER SUPPLIES

DR80154

Waukegan
Howard Peskator-Wtr. Supt.
Water Plant
Sea Horse Drive-Lake Front
Waukegan, IL 60085

0490900

Samples scheduled during: OCT 1980

Date and time in Laboratory: NOV 26 1980

Received by: [signature]

1. Mail Report to:
Name: HOWARD PESKATOR, DIRECTOR
Address: 106 N. UTICA
Post Office: WAUKEGAN State: ILL Zip Code: 60085

2. Date Collected: NOV. 20, 1980

3. Sample Collector: KEN SHEETS

4. Sampling Point: Raw

5. Telephone Number: 312-689-7431

COLLECTOR: Fill in shaded area only. Type or use black ball point pen. See reverse side for explanations and instructions.

All results reported in micrograms per liter (PPB)

Parameter	MCL µg/l	Concentration µg/l	Parameter	MCL µg/l	Concentration µg/l
Lindane	4	<0.01	o,p' - DDE		<0.01
Heptachlor	0.1	<0.01	p,p' - DDE		<0.01
Aldrin	1	<0.01	o,p' - DDD		<0.01
Heptachlor Epoxide	0.1	<0.01	p,p' - DDD		<0.01
Alpha Chlordane	Total 3	<0.01	o,p' - DDT	Total 50	<0.01
Gamma Chlordane		<0.01	p,p' - DDT		<0.01
Dieldrin	1	<0.01	Toxaphene	5	<1.0
Endrin	0.2	<0.01	Silvex	10	<0.05
Methoxychlor	100	<0.05	2,4-D	100	<0.10

– Laboratory Use Only –

Laboratory Number: DR80154

Date Forwarded: 3-2-81 By: [signature]

MTB 3-9-81

– DPWS Use Only –

RECEIVED
REGION 2
MAR 12 19[illegible]
DIV. PUBLIC WATER SUPPLIES
ENVIRONMENTAL PROTECTION AGENCY
STATE OF ILLINOIS

PWS-39 (rev. 3-79)

ILLINOIS ENVIRONMENTAL PROTECTION AGENCY — PESTICIDE ANALYSIS REPORT FORM

DIVISION OF PUBLIC WATER SUPPLIES

Waukegan (FAC #0491900)
Howard Peskator, Water Superintendent
Water Plant
Sea Horse Drive - Lake Front
Waukegan, Illinois 60085

Samples scheduled during: September, 1981

Date and time in Laboratory: D0022592

Received by: DO: SEP 29 1981

1. Mail Report to:
Name: H. Pestator
Address: 1060 N. Utica st.
Post Office: Waukegan State: Ill. Zip Code: 60085

2. Date Collected: Sept. 28, 81
3. Sample Collector: D. Nitsche
4. Sampling Point: Lab. Raw
5. Telephone Number: (312) 689-7451

COLLECTOR: Fill in shaded area only. Type or use black ball point pen. See reverse side for explanations and instructions.

All results reported in micrograms per liter (PPB)

Parameter	MCL µg/l	Concentration µg/l	Parameter	MCL µg/l	Concentration µg/l
Lindane	4	<0.01	o,p' - DDE		<0.01
Heptachlor	0.1	<0.01	p,p' - DDE		<0.01
Aldrin	1	<0.01	o,p' - DDD		<0.01
Heptachlor Epoxide	0.1	<0.01	p,p' - DDD		<0.01
Alpha Chlordane	Total	0.012	o,p' - DDT	Total	<0.01
Gamma Chlordane	3	0.011	p,p' - DDT	50	<0.01
Dieldrin	1	<0.01	Toxaphene	5	<1.0
Endrin	0.2	<0.01	Silvex	10	<0.05
Methoxychlor	100	<0.05	2, 4-D	100	<0.10
			PCB		<0.10

— Laboratory Use Only —

SEP 29 1981

Laboratory Number: D022592 D.E.

Date Forwarded: 11/20/81 By: J Hurley

— DPWS Use Only —

RECEIVED MTB 11-24-81

DEC 1 1981

I.E.P.A.

This Agency is authorized to require this information under Ill. Rev. Stat., 1979, Chapter 111 1/2 Section 1019. Disclosure of this information is required. Failure to do so may result in a civil penalty up to $10,000.00 and an additional civil penalty up to $1,000.00 for each day the failure continues, a fine up to $1,000.00 and imprisonment up to one year. This form has been approved by the Forms Management Center.

ILLINOIS EPA

ILLINOIS ENVIRONMENTAL PROTECTION AGENCY — PESTICIDE ANALYSIS REPORT FORM

DIVISION OF PUBLIC WATER SUPPLIES

Raw

Samples scheduled during: Nov., 1981

Date and time in Laboratory: NOV 30 1981

Received by: DC23256

FAC #0491900
Waukegan
Howard Peskator, Wtr. Supt.
Wtr. Plant
Sea Horse Dr., Lake Front
Wauketan, Il. 60085

1. Mail Report to:
Name: Howard Peskator, Director
Address: 106 N. Utica
Post Office: Waukegan State: Ill Zip Code: 60085

2. Date Collected: Nov-24, 1981
3. Sample Collector: Ken Sheets
4. Sampling Point: raw water spigot
5. Telephone Number: 312-689-7451

COLLECTOR: Fill in shaded area only. Type or use black ball point pen. See reverse side for explanations and instructions.

All results reported in micrograms per liter (PPB)

Parameter	MCL µg/l	Concentration µg/l
Lindane	4	<0.01
Heptachlor	0.1	<0.01
Aldrin	1	<0.01
Heptachlor Epoxide	0.1	<0.01
Alpha Chlordane	Total 3	<0.01
Gamma Chlordane		<0.01
Dieldrin	1	<0.01
Endrin	0.2	<0.01
Methoxychlor	100	<0.05

Parameter	MCL µg/l	Concentration µg/l
o,p' - DDE		<0.01
p,p' - DDE		<0.01
o,p' - DDD		<0.01
p,p' - DDD		<0.01
o,p' - DDT	Total 50	<0.01
p,p' - DDT		<0.01
Toxaphene	5	<1.0
Silvex	10	<0.05
2,4-D	100	<0.10

— Laboratory Use Only —

Laboratory Number:

Date Forwarded: By:

2/18/82 J. Hurley

MTB 2-19-82

— DPWS Use Only —

RECEIVED

FEB 22 1982

Div. Public Water Supplies
State of Illinois
Environmental Protection Agency

DC23256

This Agency is authorized to require this information under Ill. Rev. Stat. 1979, Chapter 111 1/2 Section 1019. Disclosure of this information is required. Failure to do so may result in a civil penalty up to $10,000.00 and an additional civil penalty up to $1,000.00 for each day the failure continues, a fine up to $1,000.00 and imprisonment up to one year. This form has been approved by the Forms Management Center.

PWS-39 (rev. 3-79)

ILLINOIS EPA

DIVISION OF PUBLIC WATER SUPPLIES

D023574

Waukegan (0491900)
Raw
Howard Peskator, Wtr. Supt.
Wtr. Plant
Sea Horse Dr., Lake Front
Waukegan, Il. 60085

Samples scheduled during: 12/81

Date and time in Laboratory: DEC 30 1981

Received by:

1. Mail Report to:
Name: HOWARD PESKATOR, DIRECTOR
Address: 106 N. UTICA
Post Office: WAUKEGAN State: ILL Zip Code: 60085

2. Date Collected: DEC. 28 1981
3. Sample Collector: KEN SHEETS
4. Sampling Point: RAW water spigot
5. Telephone Number: 312-689-7451

COLLECTOR: Fill in shaded area only. Type or use black ball point pen. See reverse side for explanations and instructions.

All results reported in micrograms per liter (PPB)

Parameter	MCL µg/l	Concentration µg/l
Lindane	4	< 0.01
Heptachlor	0.1	< 0.01
Aldrin	1	< 0.01
Heptachlor Epoxide	0.1	< 0.01
Alpha Chlordane	Total 3	< 0.01
Gamma Chlordane		< 0.01
Dieldrin	1	< 0.01
Endrin	0.2	< 0.01
Methoxychlor	100	< 0.05

Parameter	MCL µg/l	Concentration µg/l
o,p' - DDE		< 0.01
p,p' - DDE		< 0.01
o,p' - DDD		< 0.01
p,p' - DDD		< 0.01
o,p' - DDT	Total 50	< 0.01
p,p' - DDT		< 0.01
Toxaphene	5	< 1.0
Silvex	10	< 0.05
2,4-D	100	< 0.1
Aldicarb		< 0.1

– Laboratory Use Only –

Laboratory Number: D023574

Date Forwarded: By:

2-18-82 J. Hurley

MTB 2-19-82

– DPWS Use Only –

RECEIVED
FEB 22 1982
Div. Public Water Supplies
State of Illinois
Environmental Protection Agency

This Agency is authorized to require this information under Ill. Rev. Stat., 1979, Chapter 111 1/2 Section 1019. Disclosure of this information is required. Failure to do so may result in a civil penalty up to $10,000.00 and an additional civil penalty up to $1,000.00 for each day the failure continues, a fine up to $1,000.00 and imprisonment up to one year. This form has been approved by the Forms Management Center.

PWS-39 (rev. 3-79)

ILLINOIS EPA

ILLINOIS ENVIRONMENTAL PROTECTION AGENCY — PESTICIDE ANALYSIS

DIVISION OF PUBLIC WATER SUPPLIES

Waukegan
0491900
Howard Peskator, Wtr. Supt.
Wtr. Plant
Sea Horse Dr., Lake Front
Waukegan, Il 60085

DRW

Samples scheduled during: 3/82

Date and time in Laboratory: D024287 MAR 24 1982

Received by: D. E.

1. Mail Report to. Name: HOWARD PESKATOR, DIRECTOR	2. Date Collected: MARCH 23, 1982
Address: 106 N. UTICA	3. Sample Collector: KEN SHEETS
Post Office: WAUKEGAN State: ILL Zip Code: 60085	4. Sampling Point: RAW WATER SAMPLE
	5. Telephone Number: 312 689-7451

COLLECTOR. Fill in shaded area only. Type or use black ball point pen. See reverse side for explanations and instructions.

All results reported in micrograms per liter (PPB)

Parameter	MCL µg/l	Concentration µg/l	Parameter	MCL µg/l	Concentration µg/l
Lindane	4	<0.01	o,p' - DDE		<0.01
Heptachlor	0.1	<0.01	p,p' - DDE		<0.01
Aldrin	1	<0.01	o,p' - DDD		<0.01
Heptachlor Epoxide	0.1	<0.01	p,p' - DDD		<0.01
a Chlordane	Total	<0.01	o,p' - DDT	Total	<0.01
Gamma Chlordane	3	<0.01	p,p' - DDT	50	<0.01
Dieldrin	1	<0.01	Toxaphene	5	<1.0
Endrin	0.2	<0.01	Silvex	10	<0.05
Methoxychlor	100	<0.05	2,4-D	100	<0.1
			PCB's		<0.1

– Laboratory Use Only –

Laboratory Number: D024287 MAR 24 1982

Date Forwarded: By:

7/16/82 G. Kinney

MJB 8-17-82

– DPWS Use Only –

RECEIVED
REGION 2
AUG 18 1982
Div. Public Water Supplies
State of Illinois
Environmental Protection Agency

This Agency is authorized to require this information under Ill. Rev. Stat., 1979, Chapter 111 1/2 Section 1019. Disclosure of this information is required. Failure to do so may result in a civil penalty up to $10,000.00 and an additional civil penalty up to $1,000.00 for each day the failure continues, a fine up to $1,000.00 and imprisonment up to one year. This form has been approved by the Forms Management Center.

PWS 39 (rev 3-79)

ILLINOIS EPA

ILLINOIS ENVIRONMENTAL PROTECTION AGENCY — PESTICIDE ANALYSIS — DATA FORM

DIVISION OF PUBLIC WATER SUPPLIES

DO24594

Waukegan
0491900
Howard Peskator, Wtr. Supt.
Wtr. Plant
Sea Horse Dr. Lake Front
Waukegan, Il. 60085

Samples scheduled during: APR 28 1982 4/82

Date and time in Laboratory:

Received by: G.C.

1. Mail Report to:
Name.
HOWARD PESKATOR DIRECTOR

Address:
105 N. UTICA

Post Office: WAUKEGAN State: ILL Zip Code: 60085

2. Date Collected.
APRIL 26, 1982

3. Sample Collector:
KEN SHEETS

4. Sampling Point:
RAW WATER SPIGOT

5. Telephone Number:
312-689-7451

COLLECTOR: Fill in shaded area only. Type or use black ball point pen. See reverse side for explanations and instructions.

All results reported in micrograms per liter (PPB)

Parameter	MCL µg/l	Concentration µg/l	Parameter	MCL µg/l	Concentration µg/l
Lindane	4	<0.01	o,p' - DDE		<0.01
Heptachlor	0.1	<0.01	p,p' - DDE		<0.01
Aldrin	1	<0.01	o,p' - DDD		<0.01
Heptachlor Epoxide	0.1	<0.01	p,p' - DDD		<0.01
Alpha Chlordane	Total 3	<0.01	o,p' - DDT	Total 50	<0.01
Gamma Chlordane		<0.01	p,p' - DDT		<0.01
Dieldrin	1	<0.01	Toxaphene	5	<1.0
Endrin	0.2	<0.01	Silvex	10	<0.05
Methoxychlor	100	<0.05	2, 4-D	100	<0.1
			PCB's		<0.1

— Laboratory Use Only —

Laboratory Number: DO24594

Date Forwarded: By:

a/Gita G Hurley

MTB 8-17-82

— DPWS Use Only —

RECEIVED
REGION 2
AUG 18 1982
Div. Public Water Supplies
State of Illinois
Environmental Protection Agency

DO24594

This Agency is authorized to require this information under Ill. Rev. Stat., 1979, Chapter 111 1/2 Section 1019. Disclosure of this information is required. Failure to do so may result in a civil penalty up to $10,000.00 and an additional civil penalty up to $1,000.00 for each day the failure continues, a fine up to $1,000.00 and imprisonment up to one year. This form has been approved by the Forms Management Center.

PWS 39 (rev 3-79)

ILLINOIS EPA

DIVISION OF PUBLIC WATER SUPPLIES

Waukegan - 0491900
Howard Peskator - Wtr. Supt.
Water Plant
Sea Horse Drive - Lake Front
Waukegan, Illinois 60085

Samples scheduled during: May 1982

Date and time in Laboratory:

Received by: Spence

1. Mail Report to.
Name.
Howard Peskator, Director
Address:
106 N. Utica
Post Office: Waukegan State: Ill Zip Code: 60085

2. Date Collected.
May 25, 1982
3. Sample Collector
Ken Sheets
4. Sampling Point
raw water spigot
5. Telephone Number:
312-689-7451

COLLECTOR: Fill in shaded area only. Type or use black ball point pen. See reverse side for explanations and instructions.

All results reported in micrograms per liter (PPB)

Parameter	MCL µg/l	Concentration µg/l	Parameter	MCL µg/l	Concentration µg/l
Lindane	4	<0.01	o,p' - DDE		<0.01
Heptachlor	0.1	<0.01	p,p' - DDE		<0.01
Aldrin	1	<0.01	o,p' - DDD		<0.01
Heptachlor Epoxide	0 1	<0.01	p,p' - DDD		<0.01
ha Chlordane	Total	<0.01	o,p' - DDT	Total	<0.01
Gamma Chlordane	3	<0.01	p,p' - DDT	50	<0.01
Dieldrin	1	<0.01	Toxaphene	5	<1.0
Endrin	0.2	<0.01	Silvex	10	<0.05
Methoxychlor	100	<0.05	2,4-D	100	<0.1
			PCB's		<0.1

– Laboratory Use Only –

Laboratory Number: D025077

Date Forwarded: By:

8/19/82 JHurley

MTB 8-17-82

– DPWS Use Only –

RECEIVED
REGION 2
AUG 18 1982
Div. Public Water Supplies
State of Illinois
Environmental Protection Agency

This Agency is authorized to require this information under Ill. Rev. Stat., 1979, Chapter 111 1/2 Section 1019. Disclosure of this information is required. Failure to do so may result in a civil penalty up to $10,000.00 and an additional civil penalty up to $1,000.00 for each day the failure continues, a fine up to $1,000.00 and imprisonment up to one year. This form has been approved by the Forms Management Center.

PWS 39 (rev 3-79)

ILLINOIS EPA

ILLINOIS ENVIRONMENTAL PROTECTION AGENCY — PESTICIDE ANALYSIS REPORT FORM

DIVISION OF PUBLIC WATER SUPPLIES

Waukegan (0491900)
Howard Peskator - Wtr. Supt.
Water Plant
Sea Horse Dr - Lake Front
Waukegan, Illinois 60085

Samples scheduled during: June 1982

Date and time in Laboratory: D0025329 4:30PM

Received by: JUN 23 1982

1. Mail Report to:
Name: Howard Peskator, Director
Address: 106 N. Utica St
Post Office: Waukegan State: Ill Zip Code: 60085

2. Date Collected: JUNE 22, 1982
3. Sample Collector: KEN SHEETS
4. Sampling Point: RAW WATER SPIGOT
5. Telephone Number: 312-689-7451

COLLECTOR: Fill in shaded area only. Type or use black ball point pen. See reverse side for explanations and instructions.

All results reported in micrograms per liter (PPB)

Parameter	MCL µg/l	Concentration µg/l	Parameter	MCL µg/l	Concentration µg/l
Lindane	4	< 0.01	o,p' - DDE		< 0.01
Heptachlor	0.1	< 0.01	p,p' - DDE		< 0.01
Aldrin	1	< 0.01	o,p' - DDD		< 0.01
Heptachlor Epoxide	0.1	< 0.01	p,p' - DDD		< 0.01
Alpha Chlordane	Total 3	< 0.01	o,p' - DDT	Total 50	< 0.01
Gamma Chlordane		< 0.01	p,p' - DDT		< 0.01
Dieldrin	1	< 0.01	Toxaphene	5	< 1.0
Endrin	0.2	< 0.01	Silvex	10	< 0.05
Methoxychlor	100	< 0.05	2,4-D	100	< 0.1
PCB's		< 0.1			

– Laboratory Use Only – D. Elenberger

Laboratory Number D0025329 JUN 23 1982

Date Forwarded: By:

8/9/82 D Hennessy

MB 8-17-82

– DPWS Use Only –

RECEIVED
REGION 2
AUG 18 1982
Div. Public Water Supplies
State of Illinois
Environmental Protection Agency

This Agency is authorized to require this information under Ill. Rev. Stat. 1979, Chapter 111 1/2 Section 1019. Disclosure of this information is required. Failure to do so may result in a civil penalty up to $10,000.00 and an additional civil penalty up to $1,000.00 for each day the failure continues, a fine up to $1,000.00 and imprisonment up to one year. This form has been approved by the Forms Management Center.

PWS-39 (rev 3-79)

DIVISION OF PUBLIC WATER SUPPLIES

RAW

Waukegan (0491900)
Howard Peskator - Wtr. Supt.
Water Plant
Sea Horse Drive - Lake Front
Waukegan, Ill 60085'

Samples scheduled during: SEP 1982

Date and time in Laboratory: DO26200 OCT 5 1982

Received by: J.E.

1. Mail Report to:
Name: Howard Peskator, Director
Address: 106 N Utica
Post Office: Waukegan State: Ill Zip Code: 60085

2. Date Collected: Oct. 4, 1982
3. Sample Collector: Ken Sheets
4. Sampling Point: Raw water spigot
5. Telephone Number: 312-689-7451

COLLECTOR: Fill in shaded area only. Type or use black ball point pen. See reverse side for explanations and instructions.

All results reported in micrograms per liter (PPB)

Parameter	MCL µg/l	Concentration µg/l	Parameter	MCL µg/l	Concentration µg/l
Lindane	4	< 0.01	o,p' - DDE		< 0.01
Heptachlor	0.1	< 0.01	p,p' - DDE		< 0.01
Aldrin	1	< 0.01	o,p' - DDD		< 0.01
Heptachlor Epoxide	0.1	< 0.01	p,p' - DDD		< 0.01
Alpha Chlordane	Total	< 0.01	o,p' - DDT	Total	< 0.01
mma Chlordane	3	< 0.01	p,p' - DDT	50	< 0.01
Dieldrin	1	< 0.01	Toxaphene	5	< 1.0
Endrin	0.2	< 0.01	Silvex	10	< 0.05
Methoxychlor	100	< 0.05	2,4-D	100	< 0.10
PCB's		< 0.1			

– Laboratory Use Only –

Laboratory Number: DO26200 OCT 5 1982

Date Forwarded: 11/4/82 By: J. Hurley

MTB 11-8-82

DPWS Use Only

RECEIVED
REGION 2
NOV 17 1982
Div. Public Water Supplies
State of Illinois
Environmental Protection Agency

This Agency is authorized to require this information under Ill. Rev. Stat., 1979, Chapter 111 1/2 Section 1019. Disclosure of this information is required. Failure to do so may result in a civil penalty up to $10,000.00 and an additional civil penalty up to $1,000.00 for each day the failure continues, a fine up to $1,000.00 and imprisonment up to one year. This form has been approved by the Forms Management Center.

ILLINOIS ENVIRONMENTAL PROTECTION AGENCY PESTICIDE ANALYSIS REPORT FORM

DIVISION OF PUBLIC WATER SUPPLIES

IL0025652

Waukegan (0491900)
Howard Peskator - Wtr. Supt.
Water Plant
Sea Horse Drive - Lake Front
Waukegan, Ill. 60085

Samples scheduled during: 7/82

Date and time in Laboratory: AUG 2 1982

Received by: J.C.

1. Mail Report to.
Name: HOWARD PESKATOR DIRECTOR
Address: 106 N UTICA
Post Office: WAUKEGAN State: ILL Zip Code: 60085

2. Date Collected: JULY 30, 1982
3. Sample Collector: KEN SIBBITS
4. Sampling Point: RAW WATER - ENTRANCE
5. Telephone Number: 312-689-7451

COLLECTOR: Fill in shaded area only. Type or use black ball point pen. See reverse side for explanations and instructions.

All results reported in micrograms per liter (PPB)

Parameter	MCL µg/l	Concentration µg/l	Parameter	MCL µg/l	Concentration µg/l
Lindane	4	< 0.01	o,p' - DDE		<
Heptachlor	0.1	< 0.01	p,p' - DDE		< 0.01
Aldrin	1	< 0.01	o,p' - DDD		< 0.01
Heptachlor Epoxide	0.1	< 0.01	p,p' - DDD		< 0.01
Alpha Chlordane	Total	< 0.01	o,p' - DDT	Total	< 0.01
Gamma Chlordane	3	< 0.01	p,p' - DDT	50	< 0.01
Dieldrin	1	< 0.01	Toxaphene	5	< 1.0
Endrin	0.2	< 0.01	Silvex	10	< 0.05
Methoxychlor	100	< 0.05	2,4-D	100	< 0.10
PCB's		< 0.1			

— Laboratory Use Only —

Laboratory Number:

Date Forwarded: By: IL0025652

10/18/82 J. Hensley

MTB 10-19-82

— DPWS Use Only —

This Agency is authorized to require this information under Ill. Rev. Stat., 1979, Chapter 111 1/2 Section 1019. Disclosure of this information is required. Failure to do so may result in a civil penalty up to $10,000.00 and an additional civil penalty up to $1,000.00 for each day the failure continues, a fine up to $1,000.00 and imprisonment up to one year. This form has been approved by the Forms Management Center.

IL0025652

DPWS 20 (rev. 2-79)

DIVISION OF PUBLIC WATER SUPPLIES

D0025789

Samples scheduled during:

Waukegan (0491900)
Howard Peskator - Wtr. Supt.
Water Plant
Sea Horse Drive - Lake Front
Waukegan, Ill 60085

Date and time in Laboratory: AUG 18 1982

Received by: D. Elenberger

1. Mail Report to:
Name: HOWARD PESKATOR, DIRECTOR
Address: 106 N. UTICA ST
Post Office: WAUKEGAN State: IL Zip Code: 60085

2. Date Collected: AUG. 17, 1982
3. Sample Collector: KEN SHEETS
4. Sampling Point: RAW WATER SPIGOT
5. Telephone Number: 312-689-7451

COLLECTOR: Fill in shaded area only. Type or use black ball point pen. See reverse side for explanations and instructions.

All results reported in micrograms per liter (PPB)

Parameter	MCL µg/l	Concentration µg/l	Parameter	MCL µg/l	Concentration µg/l
Lindane	4	< 0.01	o,p' - DDE		< 0.01
Heptachlor	0.1	< 0.01	p,p' - DDE		< 0.01
Aldrin	1	< 0.01	o,p' - DDD		< 0.01
Heptachlor Epoxide	0.1	< 0.01	p,p' - DDD		< 0.01
Alpha Chlordane	Total 3	< 0.01	o,p' - DDT	Total 50	< 0.01
amma Chlordane		< 0.01	p,p' - DDT		< 0.01
Dieldrin	1	< 0.01	Toxaphene	5	< 1.0
Endrin	0.2	< 0.01	Silvex	10	< 0.05
Methoxychlor	100	< 0.05	2,4-D	100	< 0.10
PCB's		< 0.1			

— Laboratory Use Only —

Laboratory Number: D0025789 AUG 18 1982

Date Forwarded: By:

10/6/82 J. Hurley

MTB 12-15-82

— DPWS Use Only —

RECEIVED

DEC 20 1982

Div. Public Water Supplies
State of Illinois
Environmental Protection Agency

This Agency is authorized to require this information under Ill. Rev. Stat., 1979, Chapter 111 1/2 Section 1019. Disclosure of this information is required. Failure to do so may result in a civil penalty up to $10,000.00 and an additional civil penalty up to $1,000.00 for each day the failure continues, a fine up to $1,000.00 and imprisonment up to one year. This form has been approved by the Forms Management Center.

PWS-39 (rev 3-79)

ILLINOIS EPA

DIVISION OF PUBLIC WATER SUPPLIES

Raw

Waukegan (0491900)
Howard Peskator - WTr. Supt.
Water Plant
Sea Horse Drive - Lake Front
Waukegan, Ill 60085

Samples scheduled during: OCT 1982

Date and time in Laboratory: D026875

Received by: NOV 18 1982 D.E.

1. Mail Report to:
Name: WAUKEGAN
Address: 106 UTICA
Post Office: WAUKEGAN State: ILL. Zip Code: 60085

2. Date Collected: NOV. 17, 1982
3. Sample Collector: KEN SHEETS
4. Sampling Point: raw water spigot
5. Telephone Number: 312-689-7451

COLLECTOR: Fill in shaded area only. Type or use black ball point pen. See reverse side for explanations and instructions.

All results reported in micrograms per liter (PPB)

Parameter	MCL µg/l	Concentration µg/l	Parameter	MCL µg/l	Concentration µg/l
Lindane	4	< 0.01	o,p' - DDE		< 0.01
Heptachlor	0.1	< 0.01	p,p' - DDE		< 0.01
Aldrin	1	< 0.01	o,p' - DDD		< 0.01
Heptachlor Epoxide	0.1	< 0.01	p,p' - DDD		< 0.01
Alpha Chlordane	Total	< 0.01	o,p' - DDT	Total	< 0.01
Gamma Chlordane	3	< 0.01	p,p' - DDT	50	< 0.01
Dieldrin	1	< 0.01	Toxaphene	5	< 1.0
Endrin	0.2	< 0.01	Silvex	10	< 0.05
Methoxychlor	100	< 0.05	2,4-D	100	< 0.1
PCB		< 0.1			

— Laboratory Use Only NOV 18 1982

Laboratory Number: D026875

Date Forwarded: 12/18/82 By: J. Hurley

— DPWS Use Only —

MTB 12-23-82

RECEIVED
REGION 2
JAN 4 1983
Div. Public Water Supplies
State of Illinois
Environmental Protection Agency

This Agency is authorized to require this information under Ill. Rev. Stat., 1979, Chapter 111 1/2 Section 1019. Disclosure of this information is required. Failure to do so may result in a civil penalty up to $10,000.00 and an additional civil penalty up to $1,000.00 for each day the failure continues, a fine up to $1,000.00 and imprisonment up to one year. This form has been approved by the Forms Management Center.

PWS-39 (rev. 3-79)

ILLINOIS EPA

DIVISION OF PUBLIC WATER SUPPLIES

Waukegan (0491900)
Howard Peskator - Wtr. Supt.
Water Plant
Sea Horse Dr - Lake Front
Waukegan, Ill 60085

Samples scheduled during: OCT 1982

D0286483

Date and time in Laboratory: OCT 20 1982 4:35 P.M.

Received by: D. Ehrberger

1. Mail Report to.
Name: HOWARD PESKATOR, DIRECTOR
Address: 106 N. UTICA ST
Post Office: WAUKEGAN State: IL Zip Code: 60085

2. Date Collected: OCT. 19, 1982
3. Sample Collector: KEN SNEETS
4. Sampling Point: RAW WATER SPIGOT
5. Telephone Number: 312-689-7451

COLLECTOR: Fill in shaded area only. Type or use black ball point pen. See reverse side for explanations and instructions.

All results reported in micrograms per liter (PPB)

Parameter	MCL µg/l	Concentration µg/l	Parameter	MCL µg/l	Concentration µg/l
Lindane	4	< 0.01	o,p' - DDE		< 0.01
Heptachlor	0.1	< 0.01	p,p' - DDE		< 0.01
Aldrin	1	< 0.01	o,p' - DDD		< 0.01
Heptachlor Epoxide	0.1	< 0.01	p,p' - DDD		< 0.01
'pha Chlordane	Total	< 0.01	o,p' - DDT	Total	< 0.01
Gamma Chlordane	3	< 0.01	p,p' - DDT	50	< 0.01
Dieldrin	1	< 0.01	Toxaphene	5	< 1.0
Endrin	0.2	< 0.01	Silvex	10	< 0.05
Methoxychlor	100	< 0.05	2,4-D	100	< 0.1
PCB's		< 0.1			

– Laboratory Use Only –

Laboratory Number: D0286483 OCT 20 1982

Date Forwarded: 1/3/83 By: J. Hurley

– DPWS Use Only –

MB 1-6-83

This Agency is authorized to require this information under Ill. Rev. Stat., 1979, Chapter 111 1/2 Section 1019. Disclosure of this information is required. Failure to do so may result in a civil penalty up to $10,000.00 and an additional civil penalty up to $1,000.00 for each day the failure continues, a fine up to $1,000.00 and imprisonment up to one year. This form has been approved by the Forms Management Center.

PWS-39 (rev. 3-79)

ILLINOIS EPA

DIVISION OF PUBLIC WATER SUPPLIES

Raw

Waukegan (0491900)
Howard Peskator - Wtr. Supt.
Water Plant
Sea Horse Drive - Lake Front
Waukegan, Ill 60085

Samples scheduled during: JAN 1983

Date and time in Laboratory: D0227399
JAN 19 1983

Received by: D. Ebenberger

1. Mail Report to.
Name: HOWARD PESKATOR, DIRECTOR
Address: 106 N. UTICA
Post Office: WAUKEGAN State: ILL Zip Code: 60085

2. Date Collected: JAN 18, 1983
3. Sample Collector: KEN SHEETS
4. Sampling Point: RAW WATER SPIGOT
5. Telephone Number: 312-689-7451

COLLECTOR: Fill in shaded area only. Type or use black ball point pen. See reverse side for explanations and instructions.

All results reported in micrograms per liter (PPB)

Parameter	MCL µg/l	Concentration µg/l	Parameter	MCL µg/l	Concentration µg/l
Lindane	4	< 0.01	o,p' - DDE		< 0.01
Heptachlor	0.1	< 0.01	p,p' - DDE		< 0.01
Aldrin	1	< 0.01	o,p' - DDD		< 0.01
Heptachlor Epoxide	0.1	< 0.01	p,p' - DDD		< 0.01
Alpha Chlordane	Total	< 0.01	o,p' - DDT	Total	< 0.01
Gamma Chlordane	3	< 0.01	p,p' - DDT	50	< 0.01
Dieldrin	1	< 0.01	Toxaphene	5	< 1.0
Endrin	0.2	< 0.01	Silvex	10	< 0.05
Methoxychlor	100	< 0.05	2,4-D	100	< 0.1
PCB's		< .1			

– Laboratory Use Only –

JAN 19 1983

Laboratory Number: D0227399

Date Forwarded: 3/4/83 By: J. Hurley

– DPWS Use Only –

MRB 3-9-83

This Agency is authorized to require this information under Ill. Rev. Stat., 1979, Chapter 111 1/2 Section 1019. Disclosure of this information is required. Failure to do so may result in a civil penalty up to $10,000.00 and an additional civil penalty up to $1,000.00 for each day the failure continues, a fine up to $1,000.00 and imprisonment up to one year. This form has been approved by the Forms Management Center.

DIVISION OF PUBLIC WATER SUPPLIES

Waukegan (0491900)
Howard Peskator - WTr. Supt.
Water Plant
Sea Horse Drive - Lakefront
Waukegan, Ill 60085

Samples scheduled during: DEC 1982 D027186

Date and time in Laboratory: DEC 16 1982

Received by: A.C.

1. Mail Report to:
Name: HOWARD PESKATOR
Address: 106 N. UTICA
Post Office: WAUKEGAN State: ILL Zip Code: 60085

2. Date Collected: DEC. 14, 1982
3. Sample Collector: RON SNEETS
4. Sampling Point: RAW WATER SPIGOT
5. Telephone Number: 312-689-7451

COLLECTOR: Fill in shaded area only. Type or use black ball point pen. See reverse side for explanations and instructions.

All results reported in micrograms per liter (PPB)

Parameter	MCL µg/l	Concentration µg/l	Parameter	MCL µg/l	Concentration µg/l
Lindane	4	< 0.01	o,p' - DDE		< 0.01
Heptachlor	0.1	< 0.01	p,p' - DDE		< 0.01
Aldrin	1	< 0.01	o,p' - DDD		< 0.01
Heptachlor Epoxide	0.1	< 0.01	p,p' - DDD		< 0.01
Alpha Chlordane	Total	< 0.01	o,p' - DDT	Total	< 0.01
amma Chlordane	3	< 0.01	p,p' - DDT	50	< 0.01
Dieldrin	1	< 0.01	Toxaphene	5	< 1.0
Endrin	0.2	< 0.01	Silvex	10	< 0.05
Methoxychlor	100	< 0.05	2,4-D	100	< 0.1
PCB's		< .10			

— Laboratory Use Only —

Laboratory Number: D027186

Date Forwarded: 3/4/83 By: [signature]

— DPWS Use Only —

MAY 3 1983

This Agency is authorized to require this information under Ill. Rev. Stat., 1979, Chapter 111 1/2 Section 1019. Disclosure of this information is required. Failure to do so may result in a civil penalty up to $10,000.00 and an additional civil penalty up to $1,000.00 for each day the failure continues, a fine up to $1,000.00 and imprisonment up to one year. This form has been approved by the Forms Management Center.

D027186

PWS-39 (rev. 3-79)

ILLINOIS EPA

DIVISION OF PUBLIC WATER SUPPLIES

Waukegan (0491900)
Howard Peskator - Wtr. Supt.
Water Plant
Sea Horse Drive - Lake Front
Waukegan, Ill 60085

Samples scheduled during: FEB 1983

Date and time in Laboratory: D0227728 FEB 16 1983

Received by: D. Ebenberger

1. Mail Report to.
Name: HOWARD PESKATOR DIRECTOR

Address: 106 N. UTICA

Post Office: WAUKEGAN State: ILL Zip Code: 60085

2. Date Collected: FEB 15, 1983

3. Sample Collector: KEN SHEETS

4. Sampling Point: RAW WATER SPIGOT

5. Telephone Number: 312-689-7451

COLLECTOR: Fill in shaded area only. Type or use black ball point pen. See reverse side for explanations and instructions.

All results reported in micrograms per liter (PPB)

Parameter	MCL µg/l	Concentration µg/l	Parameter	MCL µg/l	Concentration µg/l
Lindane	4	< 0.01	o,p' - DDE		< 0.01
Heptachlor	0.1	< 0.01	p,p' - DDE		< 0.01
Aldrin	1	< 0.01	o,p' - DDD		< 0.01
Heptachlor Epoxide	0.1	< 0.01	p,p' - DDD		< 0.01
Alpha Chlordane	Total	< 0.01	o,p' - DDT	Total	< 0.01
Gamma Chlordane	3	< 0.01	p,p' - DDT	50	< 0.01
Dieldrin	1	< 0.01	Toxaphene	5	< 1.0
Endrin	0.2	< 0.01	Silvex	10	< 0.05
Methoxychlor	100	< 0.05	2,4-D	100	< 0.1
PCB's		< 0.1			

– Laboratory Use Only –

Laboratory Number: D0227728 FEB 16 1983

Date Forwarded: By:

4/12/83 J. Hurley

MTB 4-13-83

– DPWS Use Only –

RECEIVED

APR 14 1983

DIVISION OF PUBLIC WATER SUPPLIES
ENVIRONMENTAL PROTECTION AGENCY
STATE OF ILLINOIS

This Agency is authorized to require this information under Ill. Rev. Stat., 1979, Chapter 111 1/2 Section 1019. Disclosure of this information is required. Failure to do so may result in a civil penalty up to $10,000.00 and an additional civil penalty up to $1,000.00 for each day the failure continues, a fine up to $1,000.00 and imprisonment up to one year. This form has been approved by the Forms Management Center.

PWS-39 (rev. 3-79)

ILLINOIS EPA

DIVISION OF PUBLIC WATER SUPPLIES

RAW

Waukegan (0491900)
Howard Peskator - WTr. Supt.
Water Plant
Sea Horse Drive - Lake Front
Waukegan, Ill 60085

Samples scheduled during: MAR 1983

Date and time in Laboratory: D0288411

Received by: D. Elenberger APR 5 1983

1. Mail Report to.
Name: HOWARD PESKATOR, DIRECTOR
Address: 106 N. UTICA
Post Office: WAUKEGAN State: IL Zip Code: 60085

2. Date Collected: APRIL 4, 1983
3. Sample Collector: KEN SWEETS
4. Sampling Point: RAW WATER SPIGOT
5. Telephone Number: 312-689-7451

COLLECTOR: Fill in shaded area only. Type or use black ball point pen. See reverse side for explanations and instructions.

All results reported in micrograms per liter (PPB)

Parameter	MCL µg/l	Concentration µg/l	Parameter	MCL µg/l	Concentration µg/l
Lindane	4	< 0.01	o,p' - DDE		< 0.01
Heptachlor	0.1	< 0.01	p,p' - DDE		< 0.01
Aldrin	1	< 0.01	o,p' - DDD		< 0.01
Heptachlor Epoxide	0.1	< 0.01	p,p' - DDD		< 0.01
Alpha Chlordane	Total 3	< 0.01	o,p' - DDT	Total 50	< 0.01
Gamma Chlordane		< 0.01	p,p' - DDT		< 0.01
Dieldrin	1	< 0.01	Toxaphene	5	< 1.0
Endrin	0.2	< 0.01	Silvex	10	< 0.05
Methoxychlor	100	< 0.05	2,4-D	100	< 0.10
PCB's		< 0.1			

— Laboratory Use Only —

Laboratory Number D0288411 APR 5 1983

Date Forwarded: 6/3/83 By: J Hurley

— DPWS Use Only —

MRB 6-7-83

This Agency is authorized to require this information under Ill. Rev. Stat., 1979, Chapter 111 1/2 Section 1019. Disclosure of this information is required. Failure to do so may result in a civil penalty up to $10,000.00 and an additional civil penalty up to $1,000.00 for each day the failure continues, a fine up to $1,000.00 and imprisonment up to one year. This form has been approved by the Forms Management Center.

ILLINOIS EPA

DIVISION OF PUBLIC WATER SUPPLIES

Waukegan (0491900)
Howard Peskator - Wtr.Supt.
Water Plant
Sea Horse Drive - Lake Front
Waukegan, Ill 60085

Samples scheduled during: APR 1983

Date and time in Laboratory: D0298619

Received by: D. Clenberger APR 20 1983

1. Mail Report to:
Name: HOWARD PESKATOR, DIRECTOR
Address: 106 N UTICA
Post Office: WAUKEGAN State: IL Zip Code: 60085

2. Date Collected: April 19, 1983
3. Sample Collector: Ken Sheets
4. Sampling Point: raw water spigot
5. Telephone Number: 312-689-7451

COLLECTOR: Fill in shaded area only. Type or use black ball point pen. See reverse side for explanations and instructions.

All results reported in micrograms per liter (PPB)

Parameter	MCL µg/l	Concentration µg/l	Parameter	MCL µg/l	Concentration µg/l
Lindane	4	< 0.01	o,p' - DDE		< 0.01
Heptachlor	0.1	< 0.01	p,p' - DDE		< 0.01
Aldrin	1	< 0.01	o,p' - DDD		< 0.01
Heptachlor Epoxide	0.1	< 0.01	p,p' - DDD		< 0.01
Alpha Chlordane	Total	< 0.01	o,p' - DDT	Total	< 0.01
Gamma Chlordane	3	< 0.01	p,p' - DDT	50	< 0.01
Dieldrin	1	< 0.01	Toxaphene	5	< 1.0
Endrin	0.2	< 0.01	Silvex	10	< 0.05
Methoxychlor	100	< 0.05	2,4-D	100	< 0.10
PCB's		< 0.1			

– Laboratory Use Only –

Laboratory Number D0298619 APR 20 1983

Date Forwarded: 6/3/83 By: J Hurley

MB 6-7-83 – DPWS Use Only –

This Agency is authorized to require this information under Ill. Rev. Stat., 1979, Chapter 111 1/2 Section 1019. Disclosure of this information is required. Failure to do so may result in a civil penalty up to $10,000.00 and an additional civil penalty up to $1,000.00 for each day the failure continues, a fine up to $1,000.00 and imprisonment up to one year. This form has been approved by the Forms Management Center.

PWS-39 (rev. 3-79)

DIVISION OF PUBLIC WATER SUPPLIES

Waukegan (0491900)
Howard Peskator - Wtr. Supt.
Water Plant
Sea Horse Drive - Lake Front
Waukegan, Ill 60085

Samples scheduled during: MAY 1983

Date and time in Laboratory:

Received by:

1. Mail Report to:
Name.
HOWARD PESKATOR, DIRECTOR
Address:
106 N. Utica
Post Office: Waukegan State: Ill Zip Code: 60085

2. Date Collected:
MAY 23, 1983
3. Sample Collector:
Ken Sheets
4. Sampling Point:
Raw water spigot
5. Telephone Number:
312-689-7451

COLLECTOR: Fill in shaded area only. Type or use black ball point pen. See reverse side for explanations and instructions.

All results reported in micrograms per liter (PPB)

Parameter	MCL µg/l	Concentration µg/l	Parameter	MCL µg/l	Concentration µg/l
Lindane	4	< 0.01	o,p' - DDE		< 0.01
Heptachlor	0.1	< 0.01	p,p' - DDE		< 0.01
Aldrin	1	< 0.01	o,p' - DDD		< 0.01
Heptachlor Epoxide	0.1	< 0.01	p,p' - DDD		< 0.01
Alpha Chlordane	Total	< 0.01	o,p' - DDT	Total	< 0.01
Gamma Chlordane	3	< 0.01	p,p' - DDT	50	< 0.01
Dieldrin	1	< 0.01	Toxaphene	5	< 1.0
Endrin	0.2	< 0.01	Silvex	10	< 0.05
Methoxychlor	100	< 0.05	2,4-D	100	< 0.1
PCB's		< 0.1			

– Laboratory Use Only –

Laboratory Number:

Date Forwarded: By:

6/24/83 J. Hurley

– DPWS Use Only –

MRB 6.27.83

This Agency is authorized to require this information under Ill. Rev. Stat., 1979, Chapter 111 1/2 Section 1019. Disclosure of this information is required. Failure to do so may result in a civil penalty up to $10,000.00 and an additional civil penalty up to $1,000.00 for each day the failure continues, a fine up to $1,000.00 and imprisonment up to one year. This form has been approved by the Forms Management Center.

ILLINOIS EPA

DIVISION OF PUBLIC WATER SUPPLIES

DG29632

Waukegan (0491900)
Howard Peskator - WTr. Supt.
Water Plant
Sea Horse Drive - Lake Front
Waukegan, Ill 60085

Samples scheduled during: JUN 1983

Date and time in Laboratory: JUN 22 1983

Received by: D. Ebenberger

1. Mail Report to:
Name: Howard Peskator, Director
Address: 105 N. Utica St
Post Office: Waukegan State: IL Zip Code: 60085

2. Date Collected: June 21, 1983
3. Sample Collector: Ken Sheets
4. Sampling Point: Raw Water spigot
5. Telephone Number: 312-689-7451

COLLECTOR: Fill in shaded area only. Type or use black ball point pen. See reverse side for explanations and instructions.

All results reported in micrograms per liter (PPB)

Parameter	MCL µg/l	Concentration µg/l
Lindane	4	< 0.01
Heptachlor	0.1	< 0.01
Aldrin	1	< 0.01
Heptachlor Epoxide	0.1	< 0.01
Alpha Chlordane	Total 3	< 0.01
Gamma Chlordane		< 0.01
Dieldrin	1	< 0.01
Endrin	0.2	< 0.01
Methoxychlor	100	< 0.05
PCB's		< 0.10

Parameter	MCL µg/l	Concentration µg/l
o,p' - DDE		< 0.01
p,p' - DDE		< 0.01
o,p' - DDD		< 0.01
p,p' - DDD		< 0.01
o,p' - DDT	Total 50	< 0.01
p,p' - DDT		< 0.01
Toxaphene	5	< 1.0
Silvex	10	< 0.05
2,4-D	100	< 0.10

– Laboratory Use Only –

Laboratory Number: DG29632 JUN 22 1983

Date Forwarded: 8/8/83 By: D Hensley

– DPWS Use Only –

MTB 8-15-83

This Agency is authorized to require this information under Ill. Rev. Stat., 1979, Chapter 111 1/2 Section 1019. Disclosure of this information is required. Failure to do so may result in a civil penalty up to $10,000.00 and an additional civil penalty up to $1,000.00 for each day the failure continues, a fine up to $1,000.00 and imprisonment up to one year. This form has been approved by the Forms Management Center.

PWS-39 (rev. 3-79)

DIVISION OF PUBLIC WATER SUPPLIES

Waukegan (0491900)
Howard Peskator - Wtr. Supt.
Water Plant
Sea Horse Drive - Lake Front
Waukegan, Ill 60085

Samples scheduled during: III 1983

Date and time in Laboratory: DEC 0055

Received by: D. Ebenberger DEC 4 1983

1. Mail Report to:
Name: HOWARD PESKATOR DIRECTOR
Address: 106 N. UTICA
Post Office: WAUKEGAN State: ILL Zip Code: 60085

2. Date Collected: Aug 2, 1983
3. Sample Collector: Ken Sheets
4. Sampling Point: raw water spigot
5. Telephone Number: 312-689-7451

COLLECTOR: Fill in shaded area only. Type or use black ball point pen. See reverse side for explanations and instructions.

All results reported in micrograms per liter (PPB)

Parameter	MCL µg/l	Concentration µg/l	Parameter	MCL µg/l	Concentration µg/l
Lindane	4	< 0.01	o,p' - DDE		< 0.01
Heptachlor	0.1	< 0.01	p,p' - DDE		< 0.01
Aldrin	1	< 0.01	o,p' - DDD		< 0.01
Heptachlor Epoxide	0.1	< 0.01	p,p' - DDD		< 0.01
Alpha-Chlordane	Total 3	< 0.01	o,p' - DDT	Total 50	< 0.01
[redacted]ma-Chlordane		< 0.01	p,p' - DDT		< 0.01
Dieldrin	1	< 0.01	Toxaphene	5	< 1.0
Endrin	0.2	< 0.01	Silvex	10	< 0.05
Methoxychlor	100	< 0.05	2,4-D	100	< 0.10
PCB's		< 0.1			

— Laboratory Use Only —

Laboratory Number DE30055 DEC 4 1983

Date Forwarded: 9/16/83 By: [signature]

MB 9-21-83

— DPWS Use Only —

This Agency is authorized to require this information under Ill. Rev. Stat., 1979, Chapter 111 1/2 Section 1019. Disclosure of this information is required. Failure to do so may result in a civil penalty up to $10,000.00 and an additional civil punalty up to $1,000.00 for each day the failure continues, a fine up to $1,000.00 and imprisonment up to one year. This form has been approved by the Forms Management Center.

PWS-39 (rev. 3-79)

ILLINOIS EPA

DIVISION OF PUBLIC WATER SUPPLIES

Waukegan (0491900)
Howard Peskator - Wtr. Supt.
Water Plant
Sea Horse Drive - Lake Front
Waukegan, Ill 60085

Samples scheduled during: AUG 1983
D030276

Date and time in Laboratory:

Received by: AUG 24 1983

1. Mail Report to:
Name: HOWARD PESKATOR, DIRECTOR

Address: 106 N. UTICA

Post Office: WAUKEGAN State: ILL Zip Code: 60085

2. Date Collected: AUG 22, 1983

3. Sample Collector: KEN SHEETS

4. Sampling Point: Raw water spigot

5. Telephone Number: 312-689-7451

COLLECTOR: Fill in shaded area only. Type or use black ball point pen. See reverse side for explanations and instructions.

All results reported in micrograms per liter (PPB)

Parameter	MCL µg/l	Concentration µg/l	Parameter	MCL µg/l	Concentration µg/l
Lindane	4	< 0.01	o,p' - DDE		< 0.01
Heptachlor	0.1	< 0.01	p,p' - DDE		< 0.01
Aldrin	1	< 0.01	o,p' - DDD		< 0.01
Heptachlor Epoxide	0.1	< 0.01	p,p' - DDD		< 0.01
Alpha Chlordane	Total	< 0.01	o,p' - DDT	Total	< 0.01
Gamma Chlordane	3	< 0.01	p,p' - DDT	50	< 0.01
Dieldrin	1	< 0.01	Toxaphene	5	< 1.0
Endrin	0.2	< 0.01	Silvex	10	< 0.05
Methoxychlor	100	< 0.05	2,4-D	100	< 0.10
PCB 3		< 0.10			

— Laboratory Use Only —

Laboratory Number: D030276 AUG 24 1983

Date Forwarded: By:

10/14/83 J. Hendley

MTB 10-17-83 — DPWS Use Only —

This Agency is authorized to require this information under Ill. Rev. Stat., 1979, Chapter 111 1/2 Section 1019. Disclosure of this information is required. Failure to do so may result in a civil penalty up to $10,000.00 and an additional civil penalty up to $1,000.00 for each day the failure continues, a fine up to $1,000.00 and imprisonment up to one year. This form has been approved by the Forms Management Center.

PWS-39 (rev. 3-79)

DIVISION OF PUBLIC WATER SUPPLIES

Waukegan (0491900)
Howard Peskator-Wtr Supt
Water Plant
Sea Horse Dr-Lake Front
Waukegan, IL 60085

Samples scheduled during: D030702

Date and time in Laboratory: SEP 23 1983

Received by: RI

1. Mail Report to.
Name: Howard Peskator, Director
Address: 106 N. Utica
Post Office: Waukegan State: IL Zip Code: 60085

2. Date Collected: Sept 20, 1983
3. Sample Collector: Ken Sheets
4 Sampling Point: raw water spigot
5. Telephone Number: 312-689-7451

COLLECTOR: Fill in shaded area only. Type or use black ball point pen. See reverse side for explanations and instructions.

All results reported in micrograms per liter (PPB)

Parameter	MCL µg/l	Concentration µg/l	Parameter	MCL µg/l	Concentration µg/l
Lindane	4	< 0.01	o,p' - DDE		< 0.01
Heptachlor	0.1	< 0.01	p,p' - DDE		< 0.01
Aldrin	1	< 0.01	o,p' - DDD		< 0.01
Heptachlor Epoxide	0.1	< 0.01	p,p' - DDD		< 0.01
Alpha Chlordane	Total	< 0.01	o,p' - DDT	Total	< 0.01
Gamma Chlordane	3	< 0.01	p,p' - DDT	50	< 0.01
Dieldrin	1	< 0.01	Toxaphene	5	< 1.0
Endrin	0.2	< 0.01	Silvex	10	< 0.05
Methoxychlor	100	< 0.05	2,4-D	100	< 0.1
PCB's		< 0.1			

— Laboratory Use Only —

Laboratory Number: D030702

Date Forwarded: 11/4/83 By: J. Hurley

MMG 11-8-83

— DPWS Use Only —

This Agency is authorized to require this information under Ill. Rev. Stat., 1979, Chapter 111 1/2 Section 1019. Disclosure of this information is required. Failure to do so may result in a civil penalty up to $10,000.00 and an additional civil penalty up to $1,000.00 for each day the failure continues, a fine up to $1,000.00 and imprisonment up to one year. This form has been approved by the Forms Management Center.

PWS-39 (rev 3-79)

ILLINOIS

ILLINOIS ENVIRONMENTAL PROTECTION AGENCY PESTICIDE ANALYSIS REPORT FORM

DIVISION OF PUBLIC WATER SUPPLIES

Waukegan
FAC # 0491900
Howard Peskator - Water Supt.,
Water Plant
Sea Horse Drive - Lake Front
Waukegan, Illinois 60085

Samples scheduled during: 11/14/83 rcvd 12/15/83

Date and time in Laboratory: JAN 11 1984

Received by: RV

D031840

1. Mail Report to.
Name: HOWARD PESKATOR, DIRECTOR
Address: 106 N. Utica St
Post Office: Waukegan State: ILL Zip Code: 60085

2. Date Collected: JAN-10, 1984
3. Sample Collector: Ken Sheets
4. Sampling Point: Raw water spigot
5. Telephone Number: 312-689-7451

COLLECTOR: Fill in shaded area only. Type or use black ball point pen. See reverse side for explanations and instructions.

All results reported in micrograms per liter (PPB)

Parameter	MCL µg/l	Concentration µg/l	Parameter	MCL µg/l	Concentration µg/l
Lindane	4	< 0.01	o,p' - DDE		< 0.01
Heptachlor	0.1	< 0.01	p,p' - DDE		< 0.01
Aldrin	1	< 0.01	o,p' - DDD		< 0.01
Heptachlor Epoxide	0.1	< 0.01	p,p' - DDD		< 0.01
Alpha Chlordane	Total	< 0.01	o,p' - DDT	Total	< 0.01
Gamma Chlordane	3	< 0.01	p,p' - DDT	50	< 0.01
Dieldrin	1	< 0.01	Toxaphene	5	< 1.0
Endrin	0.2	< 0.01	Silvex	10	< 0.05
Methoxychlor	100	< 0.05	2,4-D	100	< 0.1
PCBs		< 0.1			

— Laboratory Use Only —

Laboratory Number: D031840

Date Forwarded: 2/24/84 By: J Hurley

— DPWS Use Only —

MTB 2-29-84

This Agency is authorized to require this information under Ill. Rev. Stat., 1979, Chapter 111 1/2 Section 1019. Disclosure of this information is required. Failure to do so may result in a civil penalty up to $10,000.00 and an additional civil penalty up to $1,000.00 for each day the failure continues, a fine up to $1,000.00 and imprisonment up to one year. This form has been approved by the Forms Management Center.

MWS 20 (rev. 3-79)

ILLINOIS

ILLINOIS ENVIRONMENTAL PROTECTION AGENCY PESTICIDE ANALYSIS REPORT FORM

DIVISION OF PUBLIC WATER SUPPLIES

FAC # 0491900
Waukegan
Howard Peskator - Water Supt.
Water Plant
Sea Horse Drive - Lake Front
Waukegan, Illinois 60085

Samples scheduled during: 12-29-83

Date and time in Laboratory: JAN 31 1984

Received by: Ricky Nimmons

1. Mail Report to
Name: HOWARD PESKATOR DIRECTOR
Address: 106 N. UTICA
Post Office: WAUKEGAN State: ILL Zip Code: 60085

2. Date Collected: JAN. 28, 1984
3. Sample Collector: Ken Sheets
4. Sampling Point: Raw water tap
5. Telephone Number: 312-689-7457

COLLECTOR: Fill in shaded area only. Type or use black ball point pen. See reverse side for explanations and instructions.

All results reported in micrograms per liter (PPB)

Parameter	MCL µg/l	Concentration µg/l	Parameter	MCL µg/l	Concentration µg/l
Lindane	4	< 0.01	o,p' - DDE		< 0.01
Heptachlor	0.1	< 0.01	p,p' - DDE		< 0.01
Aldrin	1	< 0.01	o,p' - DDD		< 0.01
Heptachlor Epoxide	0.1	< 0.01	p,p' - DDD		< 0.01
Alpha Chlordane	Total	< 0.01	o,p' - DDT	Total	< 0.01
Gamma Chlordane	3	< 0.01	p,p' - DDT	50	< 0.01
Dieldrin	1	< 0.01	Toxaphene	5	< 1.0
Endrin	0.2	< 0.01	Silvex	10	< 0.05
Methoxychlor	100	< 0.05	2,4-D	100	< 0.1
PCB		< 0.1			

– Laboratory Use Only –

Laboratory Number: D032026

Date Forwarded: 3/23/84 By: J. Hurley

– DPWS Use Only –

MTB 4-2-84

Environmental Protection Agency
State of Illinois

This Agency is authorized to require this information under Ill. Rev. Stat., 1979, Chapter 111 1/2 Section 1019. Disclosure of this information is required. Failure to do so may result in a civil penalty up to $10,000.00 and an additional civil penalty up to $1,000.00 for each day the failure continues, a fine up to $1,000.00 and imprisonment up to one year. This form has been approved by the Forms Management Center.

PWS 20 (rev. 2-79)

ILLINOIS ENVIRONMENTAL PROTECTION AGENCY

DIVISION OF PUBLIC WATER SUPPLIES

D032577

FAC # 0491900
Waukegan
Howard Peskator, Water Supt.,
Water Plant
Sea Horse Drive - Lake Front
Waukegan, Illinois 60085

Samples scheduled during: 3/8/84

Date and time in Laboratory:

Received by:

1. Mail Report to::
Name: Howard Peskator, Director
Address: 106 N. Utica
Post Office: Waukegan State: IL Zip Code: 60085

2. Date Collected: March 21, 1984
3. Sample Collector: Ken Sheets
4. Sampling Point: raw water tap
5. Telephone Number: 312-689-7451

COLLECTOR: Fill in shaded area only. Type or use black ball point pen. See reverse side for explanations and instructions.

All results reported in micrograms per liter (PPB)

Parameter	MCL µg/l	Concentration µg/l	Parameter	MCL µg/l	Concentration µg/l
Lindane	4	< 0.01	o,p' - DDE		< 0.01
Heptachlor	0.1	< 0.01	p,p' - DDE		< 0.01
Aldrin	1	< 0.01	o,p' - DDD		< 0.01
Heptachlor Epoxide	0.1	< 0.01	p,p' - DDD		< 0.01
Alpha Chlordane	Total 3	< 0.01	o,p' - DDT	Total 50	< 0.01
Gamma Chlordane		< 0.01	p,p' - DDT		< 0.01
Dieldrin	1	< 0.01	Toxaphene	5	< 1.0
Endrin	0.2	< 0.01	Silvex	10	< 0.05
Methoxychlor	100	< 0.01	2,4-D	100	< 0.1
PCB		< 0.1			

– Laboratory Use Only –

Laboratory Number: D032577

Date Forwarded: 5-29-84 By: J. Hurley

MB 5-31-84

– DPWS Use Only –

This Agency is authorized to require this information under Ill. Rev. Stat., 1979, Chapter 111-1/2, Section 1019. Disclosure of this information is required. Failure to do so may result in a civil penalty up to $10,000.00 and an additional civil penalty up to $1,000.00 for each day the failure continues, a fine up to $1,000.00 and imprisonment up to one year. This form has been approved by the forms Management Center.

D032577

IL 532-0142
PWS 39 (Rev. 10/81)

DIVISION OF PUBLIC WATER SUPPLIES

D0032938

FAC # 0971900
Waukegan
Howard Peskator - Water Supt.,
Water Plant
Sea Horse Drive - Lake Front
Waukegan, Illinois 60085

Samples scheduled during: 3/26/84

Date and time in Laboratory: APR 12 1984

Received by:

1. Mail Report to:
Name: Howard Peskator - Director
Address: 106 N. Utica St
Post Office: Waukegan State: ILL Zip Code: 60085

2. Date Collected: April 11, 1984
3. Sample Collector: Ken Sheets
4. Sampling Point: Raw water Spigot
5. Telephone Number: 312-689-7450

COLLECTOR: Fill in shaded area only. Type or use black ball point pen. See reverse side for explanations and instructions.

All results reported in micrograms per liter (PPB)

Parameter	MCL µg/l	Concentration µg/l
Lindane	4	< 0.01
Heptachlor	0.1	< 0.01
Aldrin	1	< 0.01
Heptachlor Epoxide	0.1	< 0.01
Alpha Chlordane	Total 3	< 0.01
Gamma Chlordane		< 0.01
Dieldrin	1	< 0.01
Endrin	0.2	< 0.01
Methoxychlor	100	< 0.05
PCB	Raw	< 0.1

Parameter	MCL µg/l	Concentration µg/l
o,p' - DDE		< 0.01
p,p' - DDE		< 0.01
o,p' - DDD		< 0.01
p,p' - DDD		< 0.01
o,p' - DDT	Total 50	< 0.01
p,p' - DDT		< 0.01
Toxaphene	5	< 1.0
Silvex	10	< 0.05
2,4-D	100	< 0.1

– Laboratory Use Only –

Laboratory Number: D0032938

Date Forwarded: By:

7 May 1984 D Hurley

– DPWS Use Only –

MB 7-31-84

AUG 1 1984

D0032938

This Agency is authorized to require this information under Ill. Rev. Stat., 1979, Chapter 111-1/2, Section 1019. Disclosure of this information is required. Failure to do so may result in a civil penalty up to $10,000.00 and an additional civil penalty up to $1,000.00 for each day the failure continues, a fine up to $1,000.00 and imprisonment up to one year. This form has been approved by the forms Management Center.

IL 532-0142
PWS 39 (Rev. 10/81)

120-010

ILLINOIS ENVIRONMENTAL PROTECTION AGENCY PESTICIDE ANALYSIS REPORT FORM

DIVISION OF PUBLIC WATER SUPPLIES

D033500

FAC # 0971900
Waukegan
Howard Peskator - Water Supt.,
Water Plant
Sea Horse Drive - Lake Front
Waukegan, Illinois 60085

Samples scheduled during: 5/2/84

Date and time in Laboratory: MAY 9 1984

Received by: [signature]

1. Mail Report to:
Name: Howard Peskator, Director
Address: 106 N. Utica St.
Post Office: Waukegan State: IL Zip Code: 60085

2. Date Collected: May 8, 1984
3. Sample Collector: Ken Sheets
4. Sampling Point: Raw Water Tap Raw
5. Telephone Number: 312-689-7451

COLLECTOR: Fill in shaded area only. Type or use black ball point pen. See reverse side for explanations and instructions.

All results reported in micrograms per liter (PPB)

Parameter	MCL µg/l	Concentration µg/l	Parameter	MCL µg/l	Concentration µg/l
Lindane	4	< 0.01	o,p' - DDE		< 0.01
Heptachlor	0.1	< 0.01	p,p' - DDE		< 0.01
Aldrin	1	< 0.01	o,p' - DDD		< 0.01
Heptachlor Epoxide	0.1	< 0.01	p,p' - DDD		< 0.01
Alpha Chlordane	Total	< 0.01	o,p' - DDT	Total	< 0.01
Gamma Chlordane	3	< 0.01	p,p' - DDT	50	< 0.01
Dieldrin	1	< 0.01	Toxaphene	5	< 1.0
Endrin	0.2	< 0.01	Silvex	10	< 0.05
Methoxychlor	100	< 0.05	2,4-D	100	< 0.1
PCB's		< 0.1			

— Laboratory Use Only —

Laboratory Number: D033500

Date Forwarded: 7/24/84 By: [signature]

— DPWS Use Only —

MTB 7-31-84

AUG 1 1984

This Agency is authorized to require this information under Ill. Rev. Stat., 1979, Chapter 111-1/2, Section 1019. Disclosure of this information is required. Failure to do so may result in a civil penalty up to $10,000.00 and an additional civil penalty up to $1,000.00 for each day the failure continues, a fine up to $1,000.00 and imprisonment up to one year. This form has been approved by the forms Management Center.

D033500

IL 532-0142

ILLINOIS ENVIRONMENTAL PROTECTION AGENCY

DIVISION OF PUBLIC WATER SUPPLIES

FAC # 0971900
Waukegan
Howard Peskator - Water Supt.,
Water Plant
Sea Horse Drive - Lake Front
Waukegan, Illinois 60085

Samples scheduled during: 5/16/84 JUN 13 1984

Date and time in Laboratory:

0034277

Received by:

1. Mail Report to:
Name: Howard Peskator, Director
Address: 106 N. Utica
Post Office: Waukegan State: ILL Zip Code: 60085

2. Date Collected: June 12, 1984
3. Sample Collector: Ken Sheets
4. Sampling Point: (Raw) rdw water spigot
5. Telephone Number: 312-689-7450

COLLECTOR: Fill in shaded area only. Type or use black ball point pen. See reverse side for explanations and instructions.

All results reported in micrograms per liter (PPB)

Parameter	MCL µg/l	Concentration µg/l	Parameter	MCL µg/l	Concentration µg/l
Lindane	4	< 0.01	o,p' - DDE		< 0.01
Heptachlor	0.1	< 0.01	p,p' - DDE		< 0.01
Aldrin	1	< 0.01	o,p' - DDD		< 0.01
Heptachlor Epoxide	0.1	< 0.01	p,p' - DDD		< 0.01
ha Chlordane	Total	< 0.01	o,p' - DDT	Total	< 0.01
Gamma Chlordane	3	< 0.01	p,p' - DDT	50	< 0.01
Dieldrin	1	< 0.01	Toxaphene	5	< 1.0
Endrin	0.2	< 0.01	Silvex	10	< 0.05
Methoxychlor	100	< 0.05	2,4-D	100	< 0.1
PCB's		< 0.1			

— Laboratory Use Only —

Laboratory Number:

Date Forwarded: 8/20/84 By: J. Hurley

— DPWS Use Only —

MTB 8-20-84

This Agency is authorized to require this information under Ill. Rev. Stat., 1979, Chapter 111-1/2, Section 1019. Disclosure of this information is required. Failure to do so may result in a civil penalty up to $10,000.00 and an additional civil penalty up to $1,000.00 for each day the failure continues, a fine up to $1,000.00 and imprisonment up to one year. This form has been approved by the forms Management Center.

0034277

IL 532-0142
PWS 39 (Rev. 10/81)

ILLINOIS ENVIRONMENTAL PROTECTION AGENCY

DIVISION OF PUBLIC WATER SUPPLIES

FAC # 0971900
Waukegan
Howard Peskator - Water Supt.,
Water Plant
Sea Horse Drive - Lake Front
Waukegan, Illinois 60085

OCT 05 1984

Samples scheduled during: 8-22-84

Date and time in Laboratory: [illegible]

Received by: [illegible]

1. Mail Report to:
Name: Howard Peskator, Director
Address: 106 N. Utica
Post Office: Waukegan State: Ill Zip Code: 60085

2. Date Collected: Sept 5, 1984

3. Sample Collector: Ken Sheets

4. Sampling Point: Raw

5. Telephone Number: 312-689-7451

COLLECTOR: Fill in shaded area only. Type or use black ball point pen. See reverse side for explanations and instructions.

All results reported in micrograms per liter (PPB)

Parameter	MCL µg/l	Concentration µg/l	Parameter	MCL µg/l	Concentration µg/l
Lindane	4	< 0.01	o,p' - DDE		< 0.01
Heptachlor	0.1	< 0.01	p,p' - DDE		< 0.01
Aldrin	1	< 0.01	o,p' - DDD		< 0.01
Heptachlor Epoxide	0.1	< 0.01	p,p' - DDD		< 0.01
Alpha Chlordane	Total	< 0.01	o,p' - DDT	Total	< 0.01
Gamma Chlordane	3	< 0.01	p,p' - DDT	50	< 0.01
Dieldrin	1	< 0.01	Toxaphene	5	< 1.0
Endrin	0.2	< 0.01	Silvex	10	
Methoxychlor	100	< 0.05	2,4-D	100	
PCB's		< 0.1			

— Laboratory Use Only —

Laboratory Number: [illegible] 5

Date Forwarded: 9/27/84 By: J. Hurley

— DPWS Use Only —

MB 10-3-84

This Agency is authorized to require this information under Ill. Rev. Stat., 1979, Chapter 111-1/2, Section 1019. Disclosure of this information is required. Failure to do so may result in a civil penalty up to $10,000.00 and an additional civil penalty up to $1,000.00 for each day the failure continues, a fine up to $1,000.00 and imprisonment up to one year. This form has been approved by the forms Management Center.

[illegible] 5

IL 532-0142
PWS 39 (Rev. 10/81)

ILLINOIS ENVIRONMENTAL PROTECTION AGENCY (PESTICIDE) ANALYSIS REPORT FORM

DIVISION OF PUBLIC WATER SUPPLIES

[illegible] 25

FAC # 0971900
Waukegan
Howard Peskator - Water Supt.,
Water Plant
Sea Horse Drive - Lake Front
Waukegan, Illinois 60085

Samples scheduled during: 10-3-84

Date and time in Laboratory: [illegible] 84

Received by: [illegible]

1. Mail Report to:
Name: Howard Peskator, Director
Address: 106 N. Utica St.
Post Office: Waukegan State: Ill Zip Code: 60085

2. Date Collected: Oct. 17, 1984
3. Sample Collector: Ken Sheers
4. Sampling Point: Raw
5. Telephone Number: [illegible]

COLLECTOR: Fill in shaded area only. Type or use black ball point pen. See reverse side for explanations and instructions.

All results reported in micrograms per liter (PPB)

Parameter	MCL µg/l	Concentration µg/l	Parameter	MCL µg/l	Concentration µg/l
Lindane	4	< 0.01	o,p' - DDE		< 0.01
Heptachlor	0.1	< 0.01	p,p' - DDE		< 0.01
Aldrin	1	< 0.01	o,p' - DDD		< 0.01
Heptachlor Epoxide	0.1	< 0.01	p,p' - DDD		< 0.01
ha Chlordane	Total	< 0.01	o,p' - DDT	Total	< 0.01
Gamma Chlordane	3	< 0.01	p,p' - DDT	50	< 0.01
Dieldrin	1	< 0.01	Toxaphene	5	< 1.0
Endrin	0.2	< 0.01	Silvex	10	
Methoxychlor	100	< 0.05	2,4-D	100	
PCBb		< 0.1			

— Laboratory Use Only —

Laboratory Number: [illegible] 25

Date Forwarded: 11/19/84 By: J Hurley

— DPWS Use Only —

RECEIVED

MAB 11-26-84

[illegible] 25

This Agency is authorized to require this information under Ill. Rev. Stat., 1979, Chapter 111-1/2, Section 1019. Disclosure of this information is required. Failure to do so may result in a civil penalty up to $10,000.00 and an additional civil penalty up to $1,000.00 for each day the failure continues, a fine up to $1,000.00 and imprisonment up to one year. This form has been approved by the forms Management Center.

IL 532-0142
PWS 39 (Rev. 10/81)

ILLINOIS ENVIRONMENTAL PROTECTION AGENCY — PESTICIDE ANALYSIS FORM

DIVISION OF PUBLIC WATER SUPPLIES

FAC # 0971900
Waukegan
Howard Peskator - Water Supt.,
Water Plant
Sea Horse Drive - Lake Front
Waukegan, Illinois 60085

Samples scheduled during: 11-19-84

Date and time in Laboratory: DEC 4 1984

Received by: Ron

D036331

1. Mail Report to:
Name: Howard Peskator, Director
Address: 106 N. Utica St
Post Office: Waukegan State: ILL Zip Code: 60085

2. Date Collected: Dec 1 1984
3. Sample Collector: Ken Sheetz
4. Sampling Point: Raw
5. Telephone Number: 312-360-9000, ext 451

COLLECTOR: Fill in shaded area only. Type or use black ball point pen. See reverse side for explanations and instructions.

All results reported in micrograms per liter (PPB)

Parameter	MCL µg/l	Concentration µg/l	Parameter	MCL µg/l	Concentration µg/l
Lindane	4	< 0.01	o,p' - DDE		< 0.01
Heptachlor	0.1	< 0.01	p,p' - DDE		< 0.01
Aldrin	1	< 0.01	o,p' - DDD		< 0.01
Heptachlor Epoxide	0.1	< 0.01	p,p' - DDD		< 0.01
Alpha Chlordane	Total 3	< 0.01	o,p' - DDT	Total 50	< 0.01
Gamma Chlordane		< 0.01	p,p' - DDT		< 0.01
Dieldrin	1	< 0.01	Toxaphene	5	< 1.0
Endrin	0.2	< 0.01	Silvex	10	
Methoxychlor	100	< 0.05	2,4-D	100	
PCB's		< 0.1			

– Laboratory Use Only –

Laboratory Number: D036331

Date Forwarded: By:

1/2/85 J Hurley

– DPWS Use Only –

MAB 1-7-85

This Agency is authorized to require this information under Ill. Rev. Stat., 1979, Chapter 111-1/2, Section 1019. Disclosure of this information is required. Failure to do so may result in a civil penalty up to $10,000.00 and an additional civil penalty up to $1,000.00 for each day the failure continues, a fine up to $1,000.00 and imprisonment up to one year. This form has been approved by the forms Management Center.

D036331

IL 532-0142
PWS 39 (Rev. 10/81)

ILLINOIS ENVIRONMENTAL PROTECTION AGENCY

DIVISION OF PUBLIC WATER SUPPLIES

FAC # 0971900
Waukegan
Howard Peskator - Water Supt.
Water Plant
Sea Horse Drive - Lake Front
Waukegan, Illinois 60085

Samples scheduled during: 12-4-84

Date and time in Laboratory: DEC 18 1984

Received by: Rwn

D037134

1. Mail Report to:
Name: Howard Peskator, Director
Address: 106 N. Utica St.
Post Office: Waukegan State: Ill Zip Code: 60085

2. Date Collected: Dec. 17, 84

3. Sample Collector: Ken Sheets

4. Sampling Point: (Raw)

5. Telephone Number: 312-360-4000, ext. 45

COLLECTOR: Fill in shaded area only. Type or use black ball point pen. See reverse side for explanations and instructions.

All results reported in micrograms per liter (PPB)

Parameter	MCL µg/l	Concentration µg/l
Lindane	4	< 0.01
Heptachlor	0.1	< 0.01
Aldrin	1	< 0.01
Heptachlor Epoxide	0.1	< 0.01
Alpha Chlordane	Total 3	< 0.01
Gamma Chlordane		< 0.01
Dieldrin	1	< 0.01
Endrin	0.2	< 0.01
Methoxychlor	100	< 0.05
PCB's		< 0.1

Parameter	MCL µg/l	Concentration µg/l
o,p' - DDE		< 0.01
p,p' - DDE		< 0.01
o,p' - DDD		< 0.01
p,p' - DDD		< 0.01
o,p' - DDT	Total 50	< 0.01
p,p' - DDT		< 0.01
Toxaphene	5	< 1.0
Silvex	10	
2,4-D	100	

— Laboratory Use Only —

Laboratory Number: D037134

Date Forwarded: 1/28/85 By: J Hurley

— DPWS Use Only —

RECEIVED

JAN 28 1985

Environmental Protection Agency
State of Illinois

1-30-85

D037134

This Agency is authorized to require this information under Ill. Rev. Stat., 1979, Chapter 111-1/2, Section 1019. Disclosure of this information is required. Failure to do so may result in a civil penalty up to $10,000.00 and an additional civil penalty up to $1,000.00 for each day the failure continues, a fine up to $1,000.00 and imprisonment up to one year. This form has been approved by the forms Management Center.

IL 532-0142
PWS 39 (Rev. 10/81)

120-010

ILLINOIS ENVIRONMENTAL PROTECTION AGENCY PESTICIDE ANALYSIS REPORT FORM

DIVISION OF PUBLIC WATER SUPPLIES

FAC # 0971900
Waukegan
Howard Peskator - Water Supt.
Water Plant
Sea Horse Drive - Lake Front
Waukegan, Illinois 60085

Samples scheduled during: 2-85

Date and time in Laboratory: MAR 13 1985

Received by: Ron

1. Mail Report to:
Name: Howard Peskator, Director
Address: 106 N. Utica
Post Office: Waukegan State: ILL Zip Code: 60085

2. Date Collected: March 12, 1985
3. Sample Collector: Ken Sheets
4. Sampling Point: Raw
5. Telephone Number: 312-360-9000, ext 451

COLLECTOR: Fill in shaded area only. Type or use black ball point pen. See reverse side for explanations and instructions.

All results reported in micrograms per liter (PPB)

Parameter	MCL µg/l	Concentration µg/l	Parameter	MCL µg/l	Concentration µg/l
Lindane	4	< 0.01	o,p' - DDE		< 0.01
Heptachlor	0.1	< 0.01	p,p' - DDE		< 0.01
Aldrin	1	< 0.01	o,p' - DDD		< 0.01
Heptachlor Epoxide	0.1	< 0.01	p,p' - DDD		< 0.01
Alpha Chlordane	Total	< 0.01	o,p' - DDT	Total	< 0.01
Gamma Chlordane	3	< 0.01	p,p' - DDT	50	< 0.01
Dieldrin	1	< 0.01	Toxaphene	5	< 1.0
Endrin	0.2	< 0.01	Silvex	10	< 0.05
Methoxychlor	100	< 0.05	2,4-D	100	< 0.1
PCB		< 0.1			

– Laboratory Use Only –

Laboratory Number: F038476

Date Forwarded: 5/9/85 By: J Hurley

– DPWS Use Only –

MB 5-13-85

This Agency is authorized to require this information under Ill. Rev. Stat., 1979, Chapter 111-1/2, Section 1019. Disclosure of this information is required. Failure to do so may result in a civil penalty up to $10,000.00 and an additional civil penalty up to $1,000.00 for each day the failure continues, a fine up to $1,000.00 and imprisonment up to one year. This form has been approved by the forms Management Center.

IL 532-0142
PWS 39 (Rev. 10/81)

120-010

ILLINOIS ENVIRONMENTAL PROTECTION AGENCY

DIVISION OF PUBLIC WATER SUPPLIES

1.0365#2
DEB

FAC # 0971900
Waukegan
Howard Peskator - Water Supt.
Water Plant
Sea Horse Drive - Lake Front
Waukegan, Illinois 60085

Samples scheduled during: 1/85

Date and time in Laboratory: JAN 25 1985

Received by: JTS

1. Mail Report to:
Name: Waukegan
Address: 406 N. Utica
Post Office: Waukegan State: Ill. Zip Code: 60085

2. Date Collected: JAN 20, 1985
3. Sample Collector: Ken Sheets
4. Sample Location Point: Raw (PCB)
5. Telephone Number: 312-360-9000 ext 845

COLLECTOR: Fill in shaded area only. Type or use black ball point pen. See reverse side for explanations and instructions.

All results reported in micrograms per liter (PPB)

Parameter	MCL µg/l	Concentration µg/l	Parameter	MCL µg/l	Concentration µg/l
Lindane	4	< 0.01	o,p' - DDE		< 0.01
Heptachlor	0.1	< 0.01	p,p' - DDE		< 0.01
Aldrin	1	< 0.01	o,p' - DDD		< 0.01
Heptachlor Epoxide	0.1	< 0.01	p,p' - DDD		< 0.01
Alpha Chlordane	Total 3	< 0.01	o,p' - DDT	Total 50	< 0.01
Gamma Chlordane		< 0.01	p,p' - DDT		< 0.01
Dieldrin	1	< 0.01	Toxaphene	5	< 1.0
Endrin	0.2	< 0.01	Silvex	10	< 0.05
Methoxychlor	100	< 0.05	2,4-D	100	< 0.10
PCB's		< 0.1			

— Laboratory Use Only —

Laboratory Number: 1.0365#2
DEB

Date Forwarded: 8/26/85 By: J. Hurley

MNB 9-4-85

— DPWS Use Only —

RECEIVED

AUG 30 1985

Environmental Protection Agency
State of Illinois

1.0367652

This Agency is authorized to require this information under Ill. Rev. Stat., 1979, Chapter 111-1/2, Section 1019. Disclosure of this information is required. Failure to do so may result in a civil penalty up to $10,000.00 and an additional civil penalty up to $1,000.00 for each day the failure continues, a fine up to $1,000.00 and imprisonment up to one year. This form has been approved by the forms Management Center.

L 532-0142
PWS 39 (Rev. 10/81)

ILLINOIS ENVIRONMENTAL PROTECTION AGENCY

DIVISION OF PUBLIC WATER SUPPLIES

FAC # 0971900
Waukegan
Howard Peskator - Water Supt.
Water Plant
Sea Horse Drive - Lake Front
Waukegan, Illinois 60085

Samples scheduled during: 4/85

Date and time in Laboratory: APR 23 1985

Received by: DEB

1. Mail Report to:
Name: Howard Peskator Director
Address: 106 N. Utica
Post Office: Waukegan State: ILL Zip Code: 60085

2. Date Collected: [illegible]
3. Sample Collector: Ken Sheets
4. Sampling Point: Raw water spigot
5. Telephone Number: 312-360-9000 ext. 451

COLLECTOR: Fill in shaded area only. Type or use black ball point pen. See reverse side for explanations and instructions.

All results reported in micrograms per liter (PPB)

Parameter	MCL µg/l	Concentration µg/l	Parameter	MCL µg/l	Concentration µg/l
Lindane	4	< 0.01	o,p' - DDE		< 0.01
Heptachlor	0.1	< 0.01	p,p' - DDE		< 0.01
Aldrin	1	< 0.01	o,p' - DDD		< 0.01
Heptachlor Epoxide	0.1	< 0.01	p,p' - DDD		< 0.01
Alpha Chlordane	Total 3	< 0.01	o,p' - DDT	Total 50	< 0.01
Gamma Chlordane		< 0.01	p,p' - DDT		< 0.01
Dieldrin	1	< 0.01	Toxaphene	5	< 1.0
Endrin	0.2	< 0.01	Silvex	10	< 0.05
Methoxychlor	100	< 0.05	2,4-D	100	< 0.10
PCB's		< 0.10			

– Laboratory Use Only –

Laboratory Number: 10[illegible]

Date Forwarded: 8-26-85 By: J Hurley

– DPWS Use Only –

RECEIVED AUG 30 1985 Environmental Protection Agency State of Illinois

MNB 9-4-85

This Agency is authorized to require this information under Ill. Rev. Stat., 1979, Chapter 111-1/2, Section 1019. Disclosure of this information is required. Failure to do so may result in a civil penalty up to $10,000.00 and an additional civil penalty up to $1,000.00 for each day the failure continues, a fine up to $1,000.00 and imprisonment up to one year. This form has been approved by the forms Management Center.

IL 532-0142
PWS 39 (Rev. 10/81)

ILLINOIS ENVIRONMENTAL PROTECTION AGENCY

DIVISION OF PUBLIC WATER SUPPLIES

D040904

FAC # 0971900
Waukegan
Howard Peskator - Water Supt.
Water Plant
Sea Horse Drive - Lake Front
Waukegan, Illinois 60085

Samples scheduled during: 6/85

Date and time in Laboratory: 6-12-85

Received by: BH

1. Mail Report to:
Name: Howard Peskator Director
Address: 106 N. Utica St
Post Office: Waukegan State: Ill Zip Code: 60085

2. Date Collected: June 11, 1985
3. Sample Collector: Ken Sheets
4. Sampling Point: Raw
5. Telephone Number: 312-360-9000 ext 451

COLLECTOR: Fill in shaded area only. Type or use black ball point pen. See reverse side for explanations and instructions.

All results reported in micrograms per liter (PPB)

Parameter	MCL µg/l	Concentration µg/l
Lindane	4	< 0.01
Heptachlor	0.1	< 0.01
Aldrin	1	< 0.01
Heptachlor Epoxide	0.1	< 0.01
Alpha Chlordane	Total 3	< 0.01
Gamma Chlordane		< 0.01
Dieldrin	1	< 0.01
Endrin	0.2	< 0.01
Methoxychlor	100	< 0.05
PCB		< 0.10

Parameter	MCL µg/l	Concentration µg/l
o,p' - DDE		< 0.01
p,p' - DDE		< 0.01
o,p' - DDD		< 0.01
p,p' - DDD		< 0.01
o,p' - DDT	Total 50	< 0.01
p,p' - DDT		< 0.01
Toxaphene	5	< 1.0
Silvex	10	< 0.05
2,4-D	100	< 0.10

– Laboratory Use Only –

Laboratory Number D040904

MB 9-4-85

Date Forwarded: 8-26-85 By: J. Hurley

RECEIVED

– PWS Use Only –

AUG 30 1985

Environmental Protection Agency
State of Illinois

This Agency is authorized to require this information under Ill. Rev. Stat., 1979, Chapter 111-1/2, Section 1019. Disclosure of this information is required. Failure to do so may result in a civil penalty up to $10,000.00 and an additional civil penalty up to $1,000.00 for each day the failure continues, a fine up to $1,000.00 and imprisonment up to one year. This form has been approved by the forms Management Center.

D040904

IL 532-0142
PWS 39 (Rev. 10/81)

120-010

ILLINOIS ENVIRONMENTAL PROTECTION AGENCY

DIVISION OF PUBLIC WATER SUPPLIES

FAC # 0971900
Waukegan
Howard Peskator - Water Supt.
Water Plant
Sea Horse Drive - Lake Front
Waukegan, Illinois 60085

Samples scheduled during: 5/85

Date and time in Laboratory: 5-21-85

Received by: B H

1. Mail Report to:
Name: Howard Peskator, Director
Address: 106 N. Utica
Post Office: Waukegan State: Ill Zip Code: 60085

2. Date Collected: May 20, 1985
3. Sample Collector: Ken Sheets
4. Sampling Point: Raw
5. Telephone Number: 312-360-9000 ext 451

COLLECTOR: Fill in shaded area only. Type or use black ball point pen. See reverse side for explanations and instructions.

All results reported in micrograms per liter (PPB)

Parameter	MCL µg/l	Concentration µg/l	Parameter	MCL µg/l	Concentration µg/l
Lindane	4	< 0.01	o,p' - DDE		< 0.01
Heptachlor	0.1	< 0.01	p,p' - DDE		< 0.01
Aldrin	1	< 0.01	o,p' - DDD		< 0.01
Heptachlor Epoxide	0.1	< 0.01	p,p' - DDD		< 0.01
Alpha Chlordane	Total	< 0.01	o,p' - DDT	Total	< 0.01
Gamma Chlordane	3	< 0.01	p,p' - DDT	50	< 0.01
Dieldrin	1	< 0.01	Toxaphene	5	< 1.0
Endrin	0.2	< 0.01	Silvex	10	< 0.05
Methoxychlor	100	< 0.05	2,4-D	100	< 0.10
PCB		< 0.10			

– Laboratory Use Only –

Laboratory Number: DL 40[illegible]

Date Forwarded: By:

8-26-85 J Hinley

RECEIVED MTB 9.4.85

– DPWS Use Only –

AUG 3 1985

Environmental Protection Agency
State of Illinois

This Agency is authorized to require this information under Ill. Rev. Stat., 1979, Chapter 111-1/2, Section 1019. Disclosure of this information is required. Failure to do so may result in a civil penalty up to $10,000.00 and an additional civil penalty up to $1,000.00 for each day the failure continues, a fine up to $1,000.00 and imprisonment up to one year. This form has been approved by the forms Management Center.

IL 532-0142
PWS 39 (Rev. 10/81)

120-010

ILLINOIS ENVIRONMENTAL PROTECTION AGENCY

D042556

DIVISION OF PUBLIC WATER SUPPLIES

FAC # 0971900
Waukegan
Howard Peskator - Water Supt.
Water Plant
Sea Horse Drive - Lake Front
Waukegan, Illinois 60085

Samples scheduled during: 8/85

Date and time in Laboratory: AUG 28 1985

Received by: Bob Hanson

1. Mail Report to:
Named: Howard Peskator Director
Address: 106 N. Utica St.
Post Office: Waukegan State: Ill Zip Code: 60085

2. Date Collected: Aug 27 1985
3. Sample Collector: Ken Sheets
4. Sampling Point: Raw
5. Telephone Number: 312-360-9000 Ext 45

COLLECTOR: Fill in shaded area only. Type or use black ball point pen. See reverse side for explanations and instructions.

All results reported in micrograms per liter (PPB)

Parameter	MCL µg/l	Concentration µg/l	Parameter	MCL µg/l	Concentration µg/l
Lindane	4	< 0.01	o,p' - DDE		< 0.01
Heptachlor	0.1	< 0.01	p,p' - DDE		< 0.01
Aldrin	1	< 0.01	o,p' - DDD		< 0.01
Heptachlor Epoxide	0.1	< 0.01	p,p' - DDD		< 0.01
[illegible]ha Chlordane	Total	< 0.01	o,p' - DDT	Total	< 0.01
Gamma Chlordane	3	< 0.01	p,p' - DDT	50	< 0.01
Dieldrin	1	< 0.01	Toxaphene	5	< 1.0
Endrin	0.2	< 0.01	Silvex	10	< 0.05
Methoxychlor	100	< 0.05	2,4-D	100	< 0.1
PCB's		< 0.1			

– Laboratory Use Only –

Laboratory Number: D042556

Date Forwarded: 11/27/85 By: J Hurley

– DPWS Use Only –

MTB 12-16-85

This Agency is authorized to require this information under Ill. Rev. Stat., 1979, Chapter 111-1/2, Section 1019. Disclosure of this information is required. Failure to do so may result in a civil penalty up to $10,000.00 and an additional civil penalty up to $1,000.00 for each day the failure continues, a fine up to $1,000.00 and imprisonment up to one year. This form has been approved by the forms Management Center.

D042556

IL 532-0142
PWS 39 (Rev. 10/81)

120-010

ILLINOIS ENVIRONMENTAL PROTECTION AGENCY — PESTICIDE ANALYSIS REPORT FORM

DIVISION OF PUBLIC WATER SUPPLIES

FAC # 0971900
Waukegan
Howard Peskator - Water Supt.
Water Plant
Sea Horse Drive - Lake Front
Waukegan, Illinois 60085

Samples scheduled during: 10/85

Date and time in Laboratory: OCT 16 1985

Received by: Bob Hannon

Howard Peskator Director
100 N. Utica St.
Waukegan IL 60085

Date Collected: 10/15/85
Sample Collected by: Rob Shreve
Sample Point: Raw
Telephone Number: 623-2060 Ext. 60

COLLECTOR: Fill in shaded area only. Type or use black ball point pen. See reverse side for explanations and instructions.

All results reported in micrograms per liter (PPB)

Parameter	MCL µg/l	Concentration µg/l	Parameter	MCL µg/l	Concentration µg/l
Lindane	4	< 0.01	o,p' - DDE		< 0.01
Heptachlor	0.1	< 0.01	p,p' - DDE		< 0.01
Aldrin	1	< 0.01	o,p' - DDD		< 0.01
Heptachlor Epoxide	0.1	< 0.01	p,p' - DDD		< 0.01
Alpha Chlordane	Total	< 0.01	o,p' - DDT	Total	< 0.01
Gamma Chlordane	3	< 0.01	p,p' - DDT	50	< 0.01
Dieldrin	1	< 0.01	Toxaphene	5	< 1.0
Endrin	0.2	< 0.01	Silvex	10	< 0.05
Methoxychlor	100	< 0.05	2,4-D	100	< 0.1
PCB's		< 0.1			

— Laboratory Use Only —

Laboratory Number: D043519

Date Forwarded: 11/27/85 By: J Hurley

— DPWS Use Only —

MRB 12-16-85

This Agency is authorized to require this information under Ill. Rev. Stat., 1979, Chapter 111-1/2, Section 1019. Disclosure of this information is required. Failure to do so may result in a civil penalty up to $10,000.00 and an additional civil penalty up to $1,000.00 for each day the failure continues, a fine up to $1,000.00 and imprisonment up to one year. This form has been approved by the forms Management Center.

D043519

IL 532-0142
PWS 39 (Rev. 10/81)

120-010

ILLINOIS ENVIRONMENTAL PROTECTION AGENCY — PESTICIDE ANALYSIS REPORT FORM

DIVISION OF PUBLIC WATER SUPPLIES

D041947

FAC # 0971900
Waukegan
Howard Peskator - Water Supt.
Water Plant
Sea Horse Drive - Lake Front
Waukegan, Illinois 60085

Samples scheduled during: 7/85

Date and time in Laboratory: AUG 1 1985

Received by: Bob Harmon

1. Mail Report to:
Name: Howard Peskator Director
Address: 106 N. Utica
Post Office: Waukegan State: Ill Zip Code: 60085

2. Date Collected: [illegible]
3. Sample Collector: Rev. Sheets
4. Sampling Point: [illegible]
5. Telephone Number: [illegible]

COLLECTOR: Fill in shaded area only. Type or use black ball point pen. See reverse side for explanations and instructions.

All results reported in micrograms per liter (PPB)

Parameter	MCL µg/l	Concentration µg/l	Parameter	MCL µg/l	Concentration µg/l
Lindane	4	< 0.01	o,p' - DDE		< 0.01
Heptachlor	0.1	< 0.01	p,p' - DDE		< 0.01
Aldrin	1	< 0.01	o,p' - DDD		< 0.01
Heptachlor Epoxide	0.1	< 0.01	p,p' - DDD		< 0.01
pha Chlordane	Total	< 0.01	o,p' - DDT	Total	< 0.01
Gamma Chlordane	3	< 0.01	p,p' - DDT	50	< 0.01
Dieldrin	1	< 0.01	Toxaphene	5	< 1.0
Endrin	0.2	< 0.01	Silvex	10	< 0.05
Methoxychlor	100	< 0.05	2, 4-D	100	< 0.1
Also PCB's		< 0.1			

— Laboratory Use Only —

Laboratory Number: D041947

Date Forwarded: 12/12/85 By: J Hurley

— DPWS Use Only —

NAB 12-16-85

This Agency is authorized to require this information under Ill. Rev. Stat., 1979, Chapter 111-1/2, Section 1019. Disclosure of this information is required. Failure to do so may result in a civil penalty up to $10,000.00 and an additional civil penalty up to $1,000.00 for each day the failure continues, a fine up to $1,000.00 and imprisonment up to one year. This form has been approved by the forms Management Center.

D041947

IL 532-0142
PWS 39 (Rev. 10/81)

ILLINOIS ENVIRONMENTAL PROTECTION AGENCY — PESTICIDE ANALYSIS REPORT FORM

DIVISION OF PUBLIC WATER SUPPLIES

[redacted] JTS
P-085089

FAC # 0971900
Waukegan
Howard Peskator - Water Supt.
Water Plant
Sea Horse Drive - Lake Front
Waukegan, Illinois 60085

Samples scheduled during: 2-85

Date and time in Laboratory: FEB 20 1985

Received by: JTS

[redacted]

COLLECTOR: Fill in shaded area only. Type or use black ball point pen. See reverse side for explanations and instructions.

All results reported in micrograms per liter (PPB)

Parameter	MCL µg/l	Concentration µg/l
Lindane	4	< 0.01
Heptachlor	0.1	< 0.01
Aldrin	1	< 0.01
Heptachlor Epoxide	0.1	< 0.01
Alpha Chlordane	Total 3	< 0.01
Gamma Chlordane		< 0.01
Dieldrin	1	< 0.01
Endrin	0.2	< 0.01
Methoxychlor	100	< 0.05
PCB's		< 0.1

Parameter	MCL µg/l	Concentration µg/l
o,p' - DDE		< 0.01
p,p' - DDE		< 0.01
o,p' - DDD		< 0.01
p,p' - DDD		< 0.01
o,p' - DDT	Total 50	< 0.01
p,p' - DDT		< 0.01
Toxaphene	5	< 1.0
Silvex	10	< 0.05
2,4-D	100	< 0.1

— Laboratory Use Only —

P-085089

Laboratory Number: [redacted] JTS

Date Forwarded: 12/26/85 By: [signature]

— DPWS Use Only —

MB 2-16-85

This Agency is authorized to require this information under Ill. Rev. Stat., 1979, Chapter 111-1/2, Section 1019. Disclosure of this information is required. Failure to do so may result in a civil penalty up to $10,000.00 and an additional civil penalty up to $1,000.00 for each day the failure continues, a fine up to $1,000.00 and imprisonment up to one year. This form has been approved by the forms Management Center.

P-085089

[redacted] JTS

IL 532-0142
PWS 39 (Rev. 10/81)

120-010

ILLINOIS ENVIRONMENTAL PROTECTION AGENCY — PESTICIDE ANALYSIS REPORT FORM

DIVISION OF PUBLIC WATER SUPPLIES

FAC # 0971900
Waukegan
Howard Peskator - Water Supt.
Water Plant
Sea Horse Drive - Lake Front
Waukegan, Illinois 60085

Samples scheduled during: 11/85

Date and time in Laboratory: NOV 6 1985

Received by: Bob Hannon

1. Mail Report to:
Name: Howard Peskator, Director
Address: 106 N. Utica St.
Post Office: Waukegan State: Ill. Zip Code: 60085

2. Date Collected:
3. Sample Collector: Kirk Ahlers Rawl
4. Sampling Point: Flow Unit Opposite
5. Telephone Number: 312-[illegible]

COLLECTOR: Fill in shaded area only. Type or use black ball point pen. See reverse side for explanations and instructions.

All results reported in micrograms per liter (PPB)

Parameter	MCL µg/l	Concentration µg/l	Parameter	MCL µg/l	Concentration µg/l
Lindane	4	< 0.01	o,p' - DDE		< 0.01
Heptachlor	0.1	< 0.01	p,p' - DDE		< 0.01
Aldrin	1	< 0.01	o,p' - DDD		< 0.01
Heptachlor Epoxide	0.1	< 0.01	p,p' - DDD		< 0.01
...ha Chlordane	Total	< 0.01	o,p' - DDT	Total	< 0.01
Gamma Chlordane	3	< 0.01	p,p' - DDT	50	< 0.01
Dieldrin	1	< 0.01	Toxaphene	5	< 1.0
Endrin	0.2	< 0.01	Silvex	10	< 0.05
Methoxychlor	100	< 0.05	2,4-D	100	< 0.1
PCB's		< 0.1			

— Laboratory Use Only —

Laboratory Number:

Date Forwarded: 5/2/86 By: J. Hurley

— DPWS Use Only —

MAB 5-5-86

This Agency is authorized to require this information under Ill. Rev. Stat., 1979, Chapter 111-1/2, Section 1019. Disclosure of this information is required. Failure to do so may result in a civil penalty up to $10,000.00 and an additional civil penalty up to $1,000.00 for each day the failure continues, a fine up to $1,000.00 and imprisonment up to one year. This form has been approved by the forms Management Center.

IL 532-0142
PWS 39 (Rev. 10/81)

120-010

ILLINOIS ENVIRONMENTAL PROTECTION AGENCY — PESTICIDE ANALYSIS REPORT FORM

DIVISION OF PUBLIC WATER SUPPLIES

FAC # 0971900
Waukegan
Howard Peskator - Water Supt.
Water Plant
Sea Horse Drive - Lake Front
Waukegan, Illinois 60085

Samples scheduled during: 12/85

Date and time in Laboratory: DEC 11 1985

Received by: Bob Hamor

1. Mail Report to: Name: Howard Peskator Director
Address: 106 N. Utica
Post Office: Waukegan State: Ill Zip Code: 60085

2. Date Collected: Dec 10 1985
3. Sample Collector: Ken Sheets
4. Sampling Point: raw water spigot
5. Telephone Number: 312-360-9000 (ext 45)

COLLECTOR: Fill in shaded area only. Type or use black ball point pen. See reverse side for explanations and instructions.

All results reported in micrograms per liter (PPB)

Parameter	MCL µg/l	Concentration µg/l	Parameter	MCL µg/l	Concentration µg/l
Lindane	4	< 0.01	o,p' - DDE		< 0.01
Heptachlor	0.1	< 0.01	p,p' - DDE		< 0.01
Aldrin	1	< 0.01	o,p' - DDD		< 0.01
Heptachlor Epoxide	0.1	< 0.01	p,p' - DDD		< 0.01
Alpha Chlordane	Total 3	< 0.01	o,p' - DDT	Total 50	< 0.01
Gamma Chlordane		< 0.01	p,p' - DDT		< 0.01
Dieldrin	1	< 0.01	Toxaphene	5	< 1.0
Endrin	0.2	< 0.01	Silvex	10	< 0.05
Methoxychlor	100	< 0.05	2,4-D	100	< 0.1
PCB's		< 0.1			

— Laboratory Use Only —

Laboratory Number: D044451

Date Forwarded: 5/2/86 By: J Hurley

— DPWS Use Only —

MB 5-5-86

This Agency is authorized to require this information under Ill. Rev. Stat., 1979, Chapter 111-1/2, Section 1019. Disclosure of this information is required. Failure to do so may result in a civil penalty up to $10,000.00 and an additional civil penalty up to $1,000.00 for each day the failure continues, a fine up to $1,000.00 and imprisonment up to one year. This form has been approved by the forms Management Center.

D044451

IL 532-0142
PWS 39 (Rev. 10/81)

ILLINOIS ENVIRONMENTAL PROTECTION AGENCY — PESTICIDE ANALYSIS REPORT FORM

DIVISION OF PUBLIC WATER SUPPLIES

LU43033

FAC # 0971900
Waukegan
Howard Peskator - Water Supt.
Water Plant
Sea Horse Drive - Lake Front
Waukegan, Illinois 60085

Samples scheduled during: 9/85

Date and time in Laboratory: SEP 25 1985

Received by: Bob Harmon

1. Mail Report to: Name: Howard Peskator Director
Address: 106 N Utica St
Post Office: Waukegan State: ILL Zip Code: 60085

2. Date Collected: Sept 24 1985
3. Sample Collector: Ken Sheets
4. Sampling Point: Raw
5. Telephone Number: 312-360-4700 ext 4051

COLLECTOR: Fill in shaded area only. Type or use black ball point pen. See reverse side for explanations and instructions.

All results reported in micrograms per liter (PPB)

Parameter	MCL µg/l	Concentration µg/l	Parameter	MCL µg/l	Concentration µg/l
Lindane	4	< 0.01	o,p' - DDE		< 0.01
Heptachlor	0.1	< 0.01	p,p' - DDE		< 0.01
Aldrin	1	< 0.01	o,p' - DDD		< 0.01
Heptachlor Epoxide	0.1	< 0.01	p,p' - DDD		< 0.01
Alpha Chlordane	Total 3	< 0.01	o,p' - DDT	Total 50	< 0.01
Gamma Chlordane		< 0.01	p,p' - DDT		< 0.01
Dieldrin	1	< 0.01	Toxaphene	5	< 1.0
Endrin	0.2	< 0.01	Silvex	10	< 0.05
Methoxychlor	100	< 0.05	2,4-D	100	< 0.1
PCB's		< 0.1			

— Laboratory Use Only —

Laboratory Number: LU43033

Date Forwarded: 5/1/86 By: D Hurley

— DPWS Use Only —

MTB 5-5-86

This Agency is authorized to require this information under Ill. Rev. Stat., 1979, Chapter 111-1/2, Section 1019. Disclosure of this information is required. Failure to do so may result in a civil penalty up to $10,000.00 and an additional civil penalty up to $1,000.00 for each day the failure continues, a fine up to $1,000.00 and imprisonment up to one year. This form has been approved by the forms Management Center.

LU43033

IL 532-0142
PWS 39 (Rev. 10/81)

ILLINOIS ENVIRONMENTAL PROTECTION AGENCY

DIVISION OF PUBLIC WATER SUPPLIES

D046085

FAC # 0971900
Waukegan
Howard Peskator - Water Supt.
Water Plant
Sea Horse Drive - Lake Front
Waukegan, Illinois 60085

Samples scheduled during: 3/86

Date and time in Laboratory: MAR 12 1986

Received by:

1. Mail Report to: Name: Howard Peskator, Director
Address: 106 N. Utica St.
Post Office: Waukegan State: Ill. Zip Code: 60085

2. Date Collected: MARCH 11 1986
3. Sample Collector: Ken Sheets
4. Sampling Point: Raw
5. Telephone Number: 312-360-9000 ext. 461

COLLECTOR: Fill in shaded area only. Type or use black ball point pen. See reverse side for explanations and instructions.

All results reported in micrograms per liter (PPB)

Parameter	MCL µg/l	Concentration µg/l	Parameter	MCL µg/l	Concentration µg/l
Lindane	4	< 0.01	o,p' - DDE		< 0.01
Heptachlor	0.1	< 0.01	p,p' - DDE		< 0.01
Aldrin	1	< 0.01	o,p' - DDD		< 0.01
Heptachlor Epoxide	0.1	< 0.01	p,p' - DDD		< 0.01
Alpha Chlordane	Total	< 0.01	o,p' - DDT	Total	< 0.01
Gamma Chlordane	3	< 0.01	p,p' - DDT	50	< 0.01
Dieldrin	1	< 0.01	Toxaphene	5	< 1.0
Endrin	0.2	< 0.01	Silvex	10	< 0.05
Methoxychlor	100	< 0.05	2,4-D	100	< 0.2
PCB		< 0.1			

— Laboratory Use Only —

Laboratory Number: D046085

Date Forwarded: 5-12-86 By: J Hurley

— DPWS Use Only —

MTB 5-13-86

This Agency is authorized to require this information under Ill. Rev. Stat., 1979, Chapter 111-1/2, Section 1019. Disclosure of this information is required. Failure to do so may result in a civil penalty up to $10,000.00 and an additional civil penalty up to $1,000.00 for each day the failure continues, a fine up to $1,000.00 and imprisonment up to one year. This form has been approved by the forms Management Center.

D046085

IL 532-0142
PWS 39 (Rev. 10/81)

120-011

ILLINOIS ENVIRONMENTAL PROTECTION AGENCY

DIVISION OF PUBLIC WATER SUPPLIES

D045661

FAC # 0971900
Waukegan
Howard Peskator - Water Supt.
Water Plant
Sea Horse Drive - Lake Front
Waukegan, Illinois 60085

Samples scheduled during: 1-86

Date and time in Laboratory: FEB 20 1986

Received by:

1. Mail Report to:
Name: Howard Peskator - Director
Address: 106 N. Utica
Post Office: Waukegan State: Ill. Zip Code: 60085

2. Date Collected: Feb 19 1986
3. Sampled by: K. Kirsch
4. Sample Collected From: Raw
5. Telephone Number: (312) 336-4900 Ext. 245

COLLECTOR: Fill in shaded area only. Type or use black ball point pen. See reverse side for explanations and instructions.

All results reported in micrograms per liter (PPB)

Parameter	MCL µg/l	Concentration µg/l	Parameter	MCL µg/l	Concentration µg/l
Lindane	4	< 0.01	o,p' - DDE		< 0.01
Heptachlor	0.1	< 0.01	p,p' - DDE		< 0.01
Aldrin	1	< 0.01	o,p' - DDD		< 0.01
Heptachlor Epoxide	0.1	< 0.01	p,p' - DDD		< 0.01
Ipha Chlordane	Total	< 0.01	o,p' - DDT	Total	< 0.01
Gamma Chlordane	3	< 0.01	p,p' - DDT	50	< 0.01
Dieldrin	1	< 0.01	Toxaphene	5	< 1.0
Endrin	0.2	< 0.01	Silvex	10	< 0.05
Methoxychlor	100	< 0.05	2,4-D	100	< 0.1
PCB's		< 0.1			

– Laboratory Use Only –

Laboratory Number: D045661

Date Forwarded: 5-12-86 By: J. Henley

– DPWS Use Only –

MB 5-13-86

This Agency is authorized to require this information under Ill. Rev. Stat., 1979, Chapter 111-1/2, Section 1019. Disclosure of this information is required. Failure to do so may result in a civil penalty up to $10,000.00 and an additional civil penalty up to $1,000.00 for each day the failure continues, a fine up to $1,000.00 and imprisonment up to one year. This form has been approved by the forms Management Center.

D045661

IL 532-0142
PWS 39 (Rev. 10/81)

120-010

ILLINOIS ENVIRONMENTAL PROTECTION AGENCY

DIVISION OF PUBLIC WATER SUPPLIES

D047485

FAC # 0971900
Waukegan
Howard Peskator - Water Supt.
Water Plant
Sea Horse Drive - Lake Front
Waukegan, Illinois 60085

Samples scheduled during: 5/86

Date and time in Laboratory: MAY 14 1986

Received by:

1. Mail Report to:
Name: Howard Peskator, Director
Address: 106 N. Utica
Post Office: Waukegan State: Ill Zip Code: 60085

2. Date Collected: May 13, 1986

3. Sample Collector: Ken Sheets

4. Sampling Point: Raw

5. Telephone Number: 312-360-9000 ext. 451

COLLECTOR: Fill in shaded area only. Type or use black ball point pen. See reverse side for explanations and instructions.

All results reported in micrograms per liter (PPB)

Parameter	MCL µg/l	Concentration µg/l	Parameter	MCL µg/l	Concentration µg/l
Lindane	4	< 0.01	o,p' - DDE		< 0.01
Heptachlor	0.1	< 0.01	p,p' - DDE		< 0.01
Aldrin	1	< 0.01	o,p' - DDD		< 0.01
Heptachlor Epoxide	0.1	< 0.01	p,p' - DDD		< 0.01
Alpha Chlordane	Total 3	< 0.01	o,p' - DDT	Total 50	< 0.01
Gamma Chlordane		< 0.01	p,p' - DDT		< 0.01
Dieldrin	1	< 0.01	Toxaphene	5	< 1.0
Endrin	0.2	< 0.01	Silvex	10	< 0.05
Methoxychlor	100	< 0.05	2,4-D	100	< 0.1
PCB's		< 0.1			

– Laboratory Use Only –

Laboratory Number: D047485

Date Forwarded: 6-17-86 By: J Hurley

– DPWS Use Only –

MAB 6-18-86

This Agency is authorized to require this information under Ill. Rev. Stat., 1979, Chapter 111-1/2, Section 1019. Disclosure of this information is required. Failure to do so may result in a civil penalty up to $10,000.00 and an additional civil penalty up to $1,000.00 for each day the failure continues, a fine up to $1,000.00 and imprisonment up to one year. This form has been approved by the forms Management Center.

D047485

IL 532-0142
PWS 39 (Rev. 10/81)

120-010

ILLINOIS ENVIRONMENTAL PROTECTION AGENCY — PESTICIDE ANALYSIS REPORT

D046834

DIVISION OF PUBLIC WATER SUPPLIES

TAC # 0971900
Waukegan
Howard Peskator - Water Supt.
Water Plant
Sea Horse Drive - Lake Front
Waukegan, Illinois 60085

Samples scheduled during: 4/86

Date and time in Laboratory: APR 16 1986

Received by: Rwn

1. Mail Report to:
Name: Howard Peskator, Director
Address: 106 N. Utica St
Post Office: Waukegan State: Ill Zip Code: 60085

2. Date Collected: April 15, 1986
3. Sample Collector: Ken Sheets
4. Sampling Point: Raw
5. Telephone Number: 812-360-9000 ext 451

COLLECTOR: Fill in shaded area only. Type or use black ball point pen. See reverse side for explanations and instructions.

All results reported in micrograms per liter (PPB)

Parameter	MCL µg/l	Concentration µg/l	Parameter	MCL µg/l	Concentration µg/l
Lindane	4	< 0.01	o,p' - DDE		< 0.01
Heptachlor	0.1	< 0.01	p,p' - DDE		< 0.01
Aldrin	1	< 0.01	o,p' - DDD		< 0.01
Heptachlor Epoxide	0.1	< 0.01	p,p' - DDD		< 0.01
[illegible]ha Chlordane	Total	< 0.01	o,p' - DDT	Total	< 0.01
Gamma Chlordane	3	< 0.01	p,p' - DDT	50	< 0.01
Dieldrin	1	< 0.01	Toxaphene	5	< 1.0
Endrin	0.2	< 0.01	Silvex	10	< 0.05
Methoxychlor	100	< 0.05	2,4-D	100	< 0.1
PCB's		< 0.1			

— Laboratory Use Only —

Laboratory Number: D046834

Date Forwarded: Rwn 8/8/86 By: J. Hurley

— DPWS Use Only —

MB 8-14-86

This Agency is authorized to require this information under Ill. Rev. Stat., 1979, Chapter 111-1/2, Section 1019. Disclosure of this information is required. Failure to do so may result in a civil penalty up to $10,000.00 and an additional civil penalty up to $1,000.00 for each day the failure continues, a fine up to $1,000.00 and imprisonment up to one year. This form has been approved by the forms Management Center.

D046834

IL 532-0142
PWS 29 (Rev. 10/81)

DIVISION OF PUBLIC WATER SUPPLIES

D048614

FAC # 0971900
Waukegan
Howard Peskator - Water Supt.
Water Plant
Sea Horse Drive - Lake Front
Waukegan, Illinois 60085

Samples scheduled during: 6/86

Date and time in Laboratory: JUN 30 1986

Received by: Zuki L Holt

1. Mail Report to:
Name: HOWARD PESKATOR, Director
Address: 106 N. Utica St
Post Office: Waukegan State: ILL Zip Code: 60085

2. Date Collected: June 27, 1986
3. Sample Collector: Ken Sheets
4. Sampling Point: RAW WATER SPIGOT
5. Telephone Number: 312-360-9000 ext 451

COLLECTOR: Fill in shaded area only. Type or use black ball point pen. See reverse side for explanations and instructions.

All results reported in micrograms per liter (PPB)

Parameter	MCL µg/l	Concentration µg/l	Parameter	MCL µg/l	Concentration µg/l
Lindane	4	< 0.01	o,p' - DDE		< 0.01
Heptachlor	0.1	< 0.01	p,p' - DDE		< 0.01
Aldrin	1	< 0.01	o,p' - DDD		< 0.01
Heptachlor Epoxide	0.1	< 0.01	p,p' - DDD		< 0.01
Alpha Chlordane	Total 3	< 0.01	o,p' - DDT	Total 50	< 0.01
Gamma Chlordane		< 0.01	p,p' - DDT		< 0.01
Dieldrin	1	< 0.01	Toxaphene	5	< 1.0
Endrin	0.2	< 0.01	Silvex	10	< 0.05
Methoxychlor	100	< 0.05	2,4-D	100	< 0.1
PCB's		< 0.1			

– Laboratory Use Only –

Laboratory Number: D048614

Date Forwarded: 8-29-86 By: [signature]

– DPWS Use Only –

MNB 9-4-86

This Agency is authorized to require this information under Ill. Rev. Stat., 1979, Chapter 111-1/2, Section 1019. Disclosure of this information is required. Failure to do so may result in a civil penalty up to $10,000.00 and an additional civil penalty up to $1,000.00 for each day the failure continues, a fine up to $1,000.00 and imprisonment up to one year. This form has been approved by the forms Management Center.

D048614

IL 532-0142
PWS 39 (Rev. 10/81)

ILLINOIS ENVIRONMENTAL PROTECTION AGENCY PESTICIDE ANALYSIS REPORT FORM

DIVISION OF PUBLIC WATER SUPPLIES

D049837

FAC # 0971900
Waukegan
Peskator, Howard
Water Plant
Sea Horse Drive - Lake Front
Waukegan, Illinois 60085

Samples scheduled during: 8/86

Date and time in Laboratory: AUG 27 1986

Received by: [illegible]

1. Mail Report to:
Name: Howard Peskator Director
Address: 106 N. Utica St.
Post Office: Waukegan State: Ill Zip Code: 60085

2. Date Collected: Aug 26, 1986
3. Sample Collector: Ken Sheets
4. Sampling Point: Raw
5. Telephone Number: 812-360-9000 ext 451

COLLECTOR: Fill in shaded area only. Type or use black ball point pen. See reverse side for explanations and instructions.

All results reported in micrograms per liter (PPB)

Parameter	MCL µg/l	Concentration µg/l	Parameter	MCL µg/l	Concentration µg/l
Lindane	4	< 0.01	o,p' - DDE		< 0.01
Heptachlor	0.1	< 0.01	p,p' - DDE		< 0.01
Aldrin	1	< 0.01	o,p' - DDD		< 0.01
Heptachlor Epoxide	0.1	< 0.01	p,p' - DDD		< 0.01
a Chlordane	Total	< 0.01	o,p' - DDT	Total	< 0.01
Gamma Chlordane	3	< 0.01	p,p' - DDT	50	< 0.01
Dieldrin	1	< 0.01	Toxaphene	5	< 1.0
Endrin	0.2	< 0.01	Silvex	10	< 0.05
Methoxychlor	100	< 0.05	2,4-D	100	< 0.1
PCB's		< 0.1			

— Laboratory Use Only —

Laboratory Number: D049837

Date Forwarded: 10-2-86 By: J Hurley

— DPWS Use Only —

MAB 10-8-86

This Agency is authorized to require this information under Ill. Rev. Stat., 1979, Chapter 111-1/2, Section 1019. Disclosure of this information is required. Failure to do so may result in a civil penalty up to $10,000.00 and an additional civil penalty up to $1,000.00 for each day the failure continues, a fine up to $1,000.00 and imprisonment up to one year. This form has been approved by the forms Management Center.

D049837

IL 532-0142
PWS 20 (Rev. 10/81)

ILLINOIS ENVIRONMENTAL PROTECTION AGENCY PESTICIDE ANALYSIS REPORT FORM

DIVISION OF PUBLIC WATER SUPPLIES

D050505

FAC # 0971900
Waukegan
Howard Peskator
Water Plant
Sea HOrse Drive - Lake Front
Waukegan, Illinois 60085

Samples scheduled during: 9/86

Date and time in Laboratory: SEP 18 1986

Received by: [illegible]

1. Mail Report to:
Name: Howard Peskator Director
Address: 106 N. Utica St
Post Office: Waukegan State: Ill Zip Code: 60085

2. Date Collected: Sept 17, 1986
3. Sample Collector: Ken Sheek
4. Sampling Point: Raw
5. Telephone Number: 312-360-9000 ext 481

COLLECTOR: Fill in shaded area only. Type or use black ball point pen. See reverse side for explanations and instructions.

All results reported in micrograms per liter (PPB)

Parameter	MCL µg/l	Concentration µg/l	Parameter	MCL µg/l	Concentration µg/l
Lindane	4	< 0.01	o,p' - DDE		< 0.01
Heptachlor	0.1	< 0.01	p,p' - DDE		< 0.01
Aldrin	1	< 0.01	o,p' - DDD		< 0.01
Heptachlor Epoxide	0.1	< 0.01	p,p' - DDD		< 0.01
Alpha Chlordane	Total	< 0.01	o,p' - DDT	Total	< 0.01
Gamma Chlordane	3	< 0.01	p,p' - DDT	50	< 0.01
Dieldrin	1	< 0.01	Toxaphene	5	< 1.0
Endrin	0.2	< 0.01	Silvex	10	< 0.05
Methoxychlor	100	< 0.05	2,4-D	100	< 0.1
PCB's		< 0.1			

– Laboratory Use Only –

Laboratory Number: D050505

Date Forwarded: 12/8/86 By: J. Hurley

– DPWS Use Only –

MB 12-11-86

D050505

This Agency is authorized to require this information under Ill. Rev. Stat., 1979, Chapter 111-1/2, Section 1019. Disclosure of this information is required. Failure to do so may result in a civil penalty up to $10,000.00 and an additional civil penalty up to $1,000.00 for each day the failure continues, a fine up to $1,000.00 and imprisonment up to one year. This form has been approved by the forms Management Center.

IL 532-0142

ILLINOIS ENVIRONMENTAL PROTECTION AGENCY PESTICIDE ANALYSIS REPORT FORM

DIVISION OF PUBLIC WATER SUPPLIES

D051073

FAC # 0971900
Waukegan
Howard Peskator
Water Plant
106 North Utica
Waukegan, Illinois 60085

Samples scheduled during: 10/86

Date and time in Laboratory: OCT 22 1986

Received by: [illegible]

1. Mail Report to:
Name: Howard Peskator [illegible]
Address: 106 N. Utica [illegible]
Post Office: Waukegan [illegible]

[illegible]

COLLECTOR: Fill in shaded area only. Type or use black ball point pen. See reverse side for explanations and instructions.

All results reported in micrograms per liter (PPB)

Parameter	MCL µg/l	Concentration µg/l	Parameter	MCL µg/l	Concentration µg/l
Lindane	4	< 0.01	o,p' - DDE		< 0.01
Heptachlor	0.1	< 0.01	p,p' - DDE		< 0.01
Aldrin	1	< 0.01	o,p' - DDD		< 0.01
Heptachlor Epoxide	0.1	< 0.01	p,p' - DDD		< 0.01
pha Chlordane	Total	< 0.01	o,p' - DDT	Total	< 0.01
Gamma Chlordane	3	< 0.01	p,p' - DDT	50	< 0.01
Dieldrin	1	< 0.01	Toxaphene	5	< 1.0
Endrin	0.2	< 0.01	Silvex	10	< 0.05
Methoxychlor	100	< 0.05	2,4-D	100	< 0.1
PCB's		< 0.1			

– Laboratory Use Only –

Laboratory Number: D051073

Date Forwarded: 12-19-86 By: J. Hurley

– DPWS Use Only –

MTB 12-23-86

D051073

This Agency is authorized to require this information under Ill. Rev. Stat., 1979, Chapter 111-1/2, Section 1019. Disclosure of this information is required. Failure to do so may result in a civil penalty up to $10,000.00 and an additional civil penalty up to $1,000.00 for each day the failure continues, a fine up to $1,000.00 and imprisonment up to one year. This form has been approved by the forms Management Center.

422-0142

ILLINOIS ENVIRONMENTAL PROTECTION AGENCY — PESTICIDE ANALYSIS

DIVISION OF PUBLIC WATER SUPPLIES

D052025

FAC # 0971900
Waukegan
Howard Peskator
Water Plant
106 North Utica
Waukegan, Illinois 60085

Samples scheduled during: 11/86

Date and time in Laboratory: DEC 3 1986

Received by: KD

1. Mail Report to:
Name: Howard Peskator, Director
Address: 106 N. Utica St.
Post Office: Waukegan State: IL Zip: 600

COLLECTOR: Fill in shaded area only. Type or use black ball point pen. See reverse side for explanations and instructions.

All results reported in micrograms per liter (PPB)

Parameter	MCL µg/l	Concentration µg/l
Lindane	4	
Heptachlor	0.1	
Aldrin	1	
Heptachlor Epoxide	0.1	
Alpha Chlordane	Total 3	
Gamma Chlordane		
Dieldrin	1	
Endrin	0.2	
Methoxychlor	100	
PCB's		
Note Pesticide extract broken RI		

Parameter	MCL µg/l	Concentration µg/l
o,p' - DDE		
p,p' - DDE		
o,p' - DDD		
p,p' - DDD		
o,p' - DDT	Total 50	
p,p' - DDT		
Toxaphene	5	
Silvex	10	< 0.05
2,4-D	100	< 0.1

— Laboratory Use Only —

Laboratory Number: D052025

Date Forwarded: 3-17-87 By: J Hunley

— DPWS Use Only —

MRB 3-17-87

D052025

This Agency is authorized to require this information under Ill. Rev. Stat., 1979, Chapter 111-1/2, Section 1019. Disclosure of this information is required. Failure to do so may result in a civil penalty up to $10,000.00 and an additional civil penalty up to $1,000.00 for each day the failure continues, a fine up to $1,000.00 and imprisonment up to one year. This form has been approved by the forms Management Center.

IL 532-0142
PWS 39 (Rev. 10/81)

120-010

Illinois Environmental Protection Agency • 2200 Churchill Road, Springfield, IL 62706

DIVISION OF PUBLIC WATER SUPPLIES

SAMPLING PROGRAM:

PESTICIDE ANALYSIS

PCB

D063642

FACILITY: 097190001 Waukegan

SAMPLES SCHEDULED DURING MARCH 1988

MAIL REPORT TO:

NAME: Howard Peskater, Director

ADDR: 106 N. Utica

CITY: WAUKEGAN STATE: IL ZIP: 60085

DATE COLLECTED: MARCH 28 1988

TIME COLLECTED: 9.00A

SAMPLE COLLECTOR: Ken Sheets

PHONE NUMBER: 312-360-9000 ext 451

FUNDING CODE: PW30
AGENCY ROUTING:
SAMPLE TYPE: RPWS - RAW
PURPOSE: S - SPECIAL
RPT INDICATOR: B
SUBMIT SRCE: 097190001
SMPL PROGRAM: PH - PESTICIDE - PCB
PARM GROUP: PCB

SAMPLE TYPE: RAW

FACILITY: Waukegan

SAMPLE LOCATION: raw water spigot

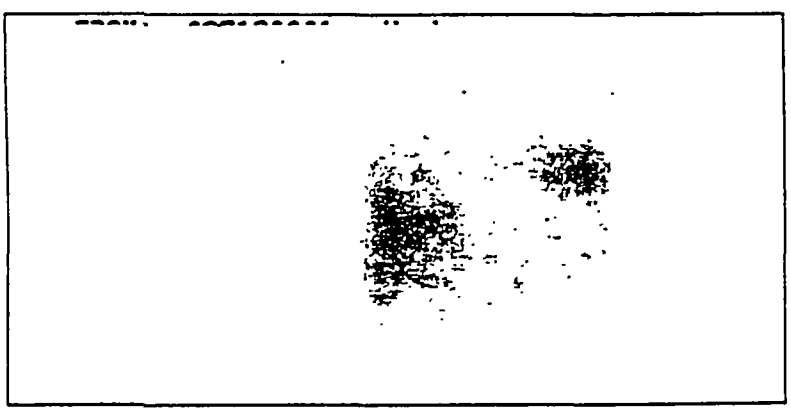

---LAB USE ONLY---

SAMPLE NUMBER D063642

DATE RECEIVED MAR 29 1988

TIME RECEIVED 11:30 A

RECEIVED BY Ron

DATE FORWARDED 4-13-88 SPVSR

IL 532-0761 PWS-31 (REV.5-87)-pestmast

ILLINOIS ENVIRONMENTAL PROTECTION AGENCY

SAMPLE NUMBER : [illegible]
SAMPLING POINT DESC. : [illegible] WATER SPIGOT

SUBMITTING SOURCE # : [illegible] SITE # :
DATE COLLECTED : [illegible] TIME COLLECTED : [illegible] SAMPLING PROGRAM :

COLLECTED [illegible] DELIVERED BY : [illegible]
COMMENTS : [illegible] HERBICIDE [illegible]
FUNDING CODE : [illegible] AGENCY POSTING : [illegible] UNIT CODE : [illegible]
[illegible] SAMPLE & PROBE CODE : [illegible] REPORTING INDICATOR : [illegible]

DATE RECEIVED : [illegible] TIME RECEIVED : [illegible] RECEIVED BY : [illegible]
LAB OBSERVATIONS : [illegible] WATER PROP BL BAM# :
SUPERVISORS INITIALS : [illegible] NOTE : [illegible] LESS THAN VALUE

6-16-88
MBC

P39340	GAMMA-BHC (LINDANE)	UG/L : .01K
P39410	HEPTACHLOR	UG/L : .01K
P39330	ALDRIN	UG/L : .01K
P39420	HEPTACHLOR EPOXIDE	UG/L : .01K
P39350	TOTAL CHLORDANE	UG/L : .01K
P39380	DIELDRIN	UG/L : .01K
P39390	ENDRIN	UG/L : .01K
P39480	METHOXYCHLOR	UG/L : .05K
P39327	O,P'-DDE	UG/L : .01K
P39320	P,P'-DDE	UG/L : .01K
P39315	O,P'-DDD	UG/L : .01K
P39310	P,P'-DDD	UG/L : .01K
P39305	O,P'-DDT	UG/L : .01K
P39300	P,P'-DDT	UG/L : .01K
P39400	TOXAPHENE	UG/L : 1.0K
P39516	TOTAL PCBS	UG/L : .01K
P39730	2,4-D	UG/L : 0.1K
P39760	SILVEX	UG/L : .05K

D082215

Illinois Environmental Protection Agency · P.O. Box 19276, Springfield, IL 62794-9276

DIVISION OF PUBLIC WATER SUPPLIES

SAMPLING PROGRAM: JUN 27 1990

PESTICIDE ANALYSIS

FACILITY: 0971900 Waukegan

SAMPLES SCHEDULED DURING June, 1990

MAIL REPORT TO:

NAME: Frank Chess, Jr. Superintendent

ADDR: 106 N. Utica St

CITY: Waukegan STATE: ILL ZIP: 60085

DATE COLLECTED: June 26, 1990

TIME COLLECTED: 8:20A

SAMPLE COLLECTOR: Ken Sheets

PHONE NUMBER: 308-360-9000, ext 451

FUNDING CODE: PW30
AGENCY ROUTING:
SAMPLE TYPE: DPWS
PURPOSE: 1-Routine
RPT INDICATOR: B
SUBMIT SRCE: 0971900
SMPL PROGRAM: PH - PESTICIDE
PARM GROUP:

SAMPLE TYPE: DPWS

FACILITY: Waukegan

SAMPLE LOCATION: raw water line

I.E.P.A.
DIV. OF
PUBLIC WATER SUPPLIES
SEP 5 '90

---LAB USE ONLY---

SAMPLE NUMBER D082215

DATE RECEIVED JUN 27 1990

TIME RECEIVED 1500 S 6

RECEIVED BY

DATE FORWARDED 8-4-90 SPW

IL 532-0761 PWS-31 (REV.5-87)-pestmast

ILLINOIS ENVIRONMENTAL PROTECTION AGENCY

SAMPLE NUMBER : D082215
SAMPLING POINT DESC. : WAUKEGAN/RAW WATER LINE

SUBMITTING SOURCE # : 0971900 SITE # :
DATE COLLECTED : 900626 TIME COLLECTED : 0820 SAMPLING PROGRAM : PI

COLLECTED BY : KEN SHEETS DELIVERED BY : EPA
COMMENTS : PESTICIDE ANALYSIS
FUNDING CODE : PW30 AGENCY ROUTING : -- UNIT CODE :
SAM TYPE CODE : DPWS SAMPLE PURPOSE CODE : 1 REPORTING INDICATOR : B

DATE RECEIVED : 900627 TIME RECEIVED : 1500 RECEIVED BY : S G
LAB OBSERVATIONS : 2 QTS WATER TRIP BL SAM# :
SUPERVISORS INITIALS : JTH NOTE : K = LESS THAN VALUE

9-6-90
MR

P39340	GAMMA-BHC (LINDANE)	UG/L :	.01K
P39410	HEPTACHLOR	UG/L :	.01K
P39330	ALDRIN	UG/L :	.01K
P39420	HEPTACHLOR EPOXIDE	UG/L :	.01K
P39350	TOTAL CHLORDANE	UG/L :	.01K
P39380	DIELDRIN	UG/L :	.01K
P39390	ENDRIN	UG/L :	.01K
P39480	METHOXYCHLOR	UG/L :	.05K
P39327	O,P'-DDE	UG/L :	.01K
P39320	P,P'-DDE	UG/L :	.01K
P39315	O,P'-DDD	UG/L :	.01K
P39310	P,P'-DDD	UG/L :	.01K
P39305	O,P'-DDT	UG/L :	.01K
P39300	P,P'-DDT	UG/L :	.01K
P39400	TOXAPHENE	UG/L :	1.0K
P39730	2,4-D	UG/L :	0.1K
P39760	SILVEX	UG/L :	.05K

D194530

Illinois Environmental Protection Agency · P.O. Box 19276, Springfield, IL 62794-9276

DIVISION OF PUBLIC WATER SUPPLIES

SAMPLING PROGRAM:

PESTICIDE ANALYSIS

FACILITY: 0971900 Waukegan

Rcvd bottles 7-3-91

SAMPLES SCHEDULED DURING JUNE 1991

MAIL REPORT TO:

NAME: Frank Chess, Jr. Supt

ADDR: 106 N. Utica St

CITY: Waukegan STATE: IL ZIP: 60085

DATE COLLECTED: July 11, 1991

TIME COLLECTED: 905A

SAMPLE COLLECTOR: Ken Sheets

PHONE NUMBER: 708-360-9000, xt 1

FUNDING CODE: PW30
AGENCY ROUTING:
SAMPLE TYPE: DPWS
PURPOSE: 1-ROUTINE
RPT INDICATOR: B
SUBMIT SRCE: 0971900
SMPL PROGRAM: PH - PESTICIDE
PARM GROUP:

SAMPLE TYPE: DPWS

FACILITY: Waukegan

SAMPLE LOCATION: Raw water

I.E.P.A.
DIV. OF
PUBLIC WATER SUPPLIES
SEP 17 '91

---LAB USE ONLY---

SAMPLE NUMBER D194530

DATE RECEIVED JUL 12 1991

TIME RECEIVED 9:40AM

RECEIVED BY FT

DATE FORWARDED 9/16/91 SDWSB

IL 532-0761 PWS-31 (REV.5-87)-pestmast

ILLINOIS ENVIRONMENTAL PROTECTION AGENCY

SAMPLE NUMBER : 0194530
SAMPLING POINT DESC. : WAUKEGAN/RAW WATER

SUBMITTING SOURCE # : 0971900 SITE # :
DATE COLLECTED : 910711 TIME COLLECTED : 0905 SAMPLING PROGRAM : PH

COLLECTED BY : KEN SHEETS DELIVERED BY : UPS
COMMENTS : PESTICIDE ANALYSIS
FUNDING CODE : PW30 AGENCY ROUTING : -- UNIT CODE :
SAM TYPE CODE : DPWS SAMPLE PURPOSE CODE : 1 REPORTING INDICATOR : B

DATE RECEIVED : 910712 TIME RECEIVED : 0940 RECEIVED BY : F T
LAB OBSERVATIONS : 2 QTS WATER TRIP BL SAM# :
SUPERVISORS INITIALS : JTH NOTE : K = LESS THAN VALUE

P39340	GAMMA-BHC (LINDANE)	UG/L :	.01K
P39410	HEPTACHLOR	UG/L :	.01K
P39330	ALDRIN	UG/L :	.01K
P39420	HEPTACHLOR EPOXIDE	UG/L :	.01K
P39350	TOTAL CHLORDANE	UG/L :	.01K
P39380	DIELDRIN	UG/L :	.01K
P39390	ENDRIN	UG/L :	.01K
P39480	METHOXYCHLOR	UG/L :	.05K
P39327	O,P'-DDE	UG/L :	.01K
P39320	P,P'-DDE	UG/L :	.01K
P39315	O,P'-DDD	UG/L :	.01K
P39310	P,P'-DDD	UG/L :	.01K
P39305	O,P'-DDT	UG/L :	.01K
P39300	P,P'-DDT	UG/L :	.01K
P39400	TOXAPHENE	UG/L :	1.0K
P39730	2,4-D	UG/L :	0.1K
P39760	SILVEX	UG/L :	.05K

: ATRAZINE .15 UG/L.

9-13-91

Illinois Environmental Protection Agency

[redacted]

PESTICIDES, PCB, ORGANICS
HERBICIDES

Waukegan
Fac No. 0971900

Samples Scheduled During:

Date and Time in Laboratory: MAY 1 1992

Received By: AP

1. Mail Report To: Name: Frank Chess	2. Date Collected: 4/29/92
	3. Time Collected: 11:50 AM
Address: City Hall, 106 North Utica St.	4. Sample Collector: E-ABAD / Ali
Post Office: Waukegan State: IL Zip Code: 60085	5. Sampling Point: Raw at Plant
	6. Temperature: ☐ Celcius ☐ Fahrenheit
COLLECTOR: Fill in shaded area only. Type or use black ball point pen. See reverse side for explanations and instructions.	7. pH:
	8. Chlorine Residual:

PARAMETER	Concentration µg/l	PARAMETER	Concentration µg/l
methylene chloride			
1,1-dichloroethane			
dichloroethylene			
chloroform			
1,2-dichloroethane			
1,1,1-trichloroethane			
carbon tetrachloride			
dichlorobromomethane			
trichloroethylene			
dibromochloromethane			
bromoform			
tetrachloroethylene			
benzene			
toluene			
chlorobenzene			
ethylbenzene			
xylenes (total)			
dichlorobenzene			

-Laboratory Use Only-

Laboratory Number: D216750

Date Forwarded: 5-28-92 By: J Hurley

-DPWS Use Only-

RECEIVED

JUN 01 1992

Environmental Protection Agency
State of Illinois

This Agency is authorized to require this information under ILLINOIS REVISED STATUTES, 1979, Chapter 111½, Sec. 1019. Disclosure of this information is required. Failure to do so may result in a civil penalty up to $10,000.00 and an additional civil penalty up to $1,000.00 for each day the failure continues, a fine up to $1,000.00 and imprisonment up to one year. This form has been approved by the Forms Management Center.

IL 532-1310
PWS 149 2/85

SAMPLE NUMBER : D216750
SAMPLING POINT DESC. : WAUKEGAN/RAT AT PLANT/A

SUBMITTING SOURCE # : 0971900 SITE # :
DATE COLLECTED : 920429 TIME COLLECTED : 1150 SAMPLING PROGRAM :

COLLECTED BY : E ABAD DELIVERED BY : EPA
COMMENTS : PESTS/PCB/ORGANICS/HERBS
FUNDING CODE : PW30 AGENCY ROUTING : -- UNIT CODE :
TYPE CODE : SAMPLE PURPOSE CODE : - REPORTING INDICATOR : B

DATE RECEIVED : 920501 TIME RECEIVED : 1110 RECEIVED BY : A P
LAB OBSERVATIONS : 1 GAL WATER TRIP BL SAM# :
SUPERVISORS INITIALS : JTH NOTE : K = LESS THAN VALUE

P39340	GAMMA-BHC (LINDANE)	UG/L	.01K
P39410	HEPTACHLOR	UG/L	.01K
P39330	ALDRIN	UG/L	.01K
P39420	HEPTACHLOR EPOXIDE	UG/L	.01K
P39348	ALPHA-CHLORDANE	UG/L	.01K
P39810	GAMMA-CHLORDANE	UG/L	.01K
P39380	DIELDRIN	UG/L	.01K
P39390	ENDRIN	UG/L	.01K
P39480	METHOXYCHLOR	UG/L	.05K
P39327	O,P'-DDE	UG/L	.01K
P39320	P,P'-DDE	UG/L	.01K
P39315	O,P'-DDD	UG/L	.01K
P39310	P,P'-DDD	UG/L	.01K
P39305	O,P'-DDT	UG/L	.01K
P39300	P,P'-DDT	UG/L	.01K
P39516	TOTAL PCBS	UG/L	0.1K
P34694	PHENOL	UG/L	5.0K
P34273	BIS(2-CHLOROETHYL)ETHER	UG/L	5.0K
P34586	2-CHLOROPHENOL	UG/L	5.0K
P34566	1,3-DICHLOROBENZENE	UG/L	5.0K
P34571	1,4-DICHLOROBENZENE	UG/L	5.0K
P77147	BENZYL ALCOHOL	UG/L	5.0K
P34536	1,2-DICHLOROBENZENE	UG/L	5.0K
A00000	2-METHYLPHENOL	UG/L	5.0K
P34283	BIS(2-CHLOROISOPROPYL)ETHER	UG/L	5.0K
A00000	4-METHYLPHENOL	UG/L	5.0K
[illegible]28	N-NITROSO-DI-N-PROPYLAMINE	UG/L	5.0K
[illegible]396	HEXACHLOROETHANE	UG/L	5.0K
P34447	NITROBENZENE	UG/L	5.0K

6/3/92

P34406	ISOPHORONE	UG/L : 5.0K
P34591	2-NITROPHENOL	UG/L : 5.0K
P34606	2,4-DIMETHYLPHENOL	UG/L : 5.0K
P77?47	BENZOIC ACID	UG/L : 50K
P3?278	BIS(2-CHLOROETHOXY)METHANE	UG/L : 5.0K
P34601	2,4-DICHLOROPHENOL	UG/L : 5.0K
P34551	1,2,4-TRICHLOROBENZENE	UG/L : 5.0K
P34696	NAPHTHALENE	UG/L : 5.0K
A00000	4-CHLOROANILINE	UG/L : 5.0K
P34391	HEXACHLOROBUTADIENE	UG/L : 5.0K
P34452	4-CHLORO-3-METHYLPHENOL	UG/L : 5.0K
P77416	2-METHYLNAPHTHALENE	UG/L : 5.0K
P34386	HEXACHLOROCYCLOPENTADIENE	UG/L : 5.0K
P34621	2,4,6-TRICHLOROPHENOL	UG/L : 5.0K
P77687	2,4,5-TRICHLOROPHENOL	UG/L : 5.0K
P34581	2-CHLORONAPHTHALENE	UG/L : 5.0K
A00000	2-NITROANILINE	UG/L : 10K
P34341	DIMETHYLPHTHALATE	UG/L : 5.0K
P34200	ACENAPHTHYLENE	UG/L : 5.0K
P34626	2,6-DINITROTOLUENE	UG/L : 5.0K
P78300	3-NITROANILINE	UG/L : 10K
P34205	ACENAPHTHENE	UG/L : 5.0K
P34616	2,4-DINITROPHENOL	UG/L : 10K
P34646	4-NITROPHENOL	UG/L : 10K
P?1302	DIBENZOFURAN	UG/L : 5.0K
P34611	2,4-DINITROTOLUENE	UG/L : 5.0K
P34336	DIETHYLPHTHALATE	UG/L : 5.0K
P34641	4-CHLOROPHENYL PHENYL ETHER	UG/L : 5.0K
P34381	FLUORENE	UG/L : 5.0K
A00000	4-NITROANILINE	UG/L : 10K
A00000	4,6-DINITRO-2-METHYLPHENOL	UG/L : 10K
P34636	4-BROMOPHENYL PHENYL ETHER	UG/L : 5.0K
P39700	HEXACHLOROBENZENE	UG/L : 5.0K
P39032	PENTACHLOROPHENOL	UG/L : 10K
P34461	PHENANTHRENE	UG/L : 5.0K
P34220	ANTHRACENE	UG/L : 5.0K
P39110	DI-N-BUTYLPHTHLATE	UG/L : 5.0K
P34376	FLUORANTHENE	UG/L : 5.0K
P34469	PYRENE	UG/L : 5.0K
P34292	BUTYL BENZYL PHTHALATE	UG/L : 5.0K
P34631	3,3'-DICHLOROBENZIDINE	UG/L : 10K
P34526	BENZO(A)ANTHRACENE	UG/L : 5.0K
P34320	CHRYSENE	UG/L : 5.0K

P39100	BIS(2-ETHYLHEXYL)PHTHALATE	UG/L	: 5.0K
P34596	DI-N-OCTYLPHTHALATE	UG/L	: 5.0K
P34230	BENZO(B)FLUORANTHENE	UG/L	: 5.0K
P34242	BENZO(K)FLUORANTHENE	UG/L	: 5.0K
P34247	BENZO(A)PYRENE	UG/L	: 5.0K
[illegible]3	INDENO(1,2,3-CD)PYRENE	UG/L	: 5.0K
[illegible]56	DIBENZO(AH)ANTHRACENE	UG/L	: 5.0K
P34521	BENZO(GHI)PERYLENE	UG/L	: 5.0K

Illinois Environmental Protection Agency

[redacted]

PESTICIDES, PCB, ORGANICS
HERBICIDES

Waukegan
Fac No. 097 1900

Samples Scheduled During:

Date and Time in Laboratory: MAY 1 1992

Received By: AP

1. Mail Report To: Name: Frank Chess	2. Date Collected: 4/29/92	3. Time Collected: 11:50 AM
Address: City Hall, 106 North Utica St.	4. Sample Collector: E-ARM / AP	
Post Office: Waukegan State: IL Zip Code: 60085	5. Sampling Point: Raw at Plant	
	6. Temperature: ☐ Celcius ☐ Fahrenheit	
COLLECTOR: Fill in shaded area only. Type or use black ball point pen. See reverse side for explanations and instructions.	7. pH:	8. Chlorine Residual:

PARAMETER	Concentration µg/l	PARAMETER	Concentration µg/l
methylene chloride			
1,1-dichloroethane			
dichloroethylene			
chloroform			
1,2-dichloroethane			
1,1,1-trichloroethane			
carbon tetrachloride			
dichlorobromomethane			
trichloroethylene			
dibromochloromethane			
bromoform			
tetrachloroethylene			
benzene			
toluene			
chlorobenzene			
ethylbenzene			
xylenes (total)			
dichlorobenzene			

-Laboratory Use Only-

Laboratory Number: D216750

Date Forwarded: 5-28-92 By: J Hurley

-DPWS Use Only-

RECEIVED

JUN 01 1992

Environmental Protection Agency
State of Illinois

This Agency is authorized to require this information under ILLINOIS REVISED STATUTES, 1979, Chapter 111½, Sec. 1019. Disclosure of this information is required. Failure to do so may result in a civil penalty up to $10,000.00 and an additional civil penalty up to $1,000.00 for each day the failure continues, a fine up to $1,000.00 and imprisonment up to one year. This form has been approved by the Forms Management Center.

IL 532-1310
PWS 149 2/85

SAMPLE NUMBER : D216750
SAMPLING POINT DESC. : WAUKEGAN/RAT AT PLANT/A

SUBMITTING SOURCE # : 0971900 SITE # :
DATE COLLECTED : 920429 TIME COLLECTED : 1150 SAMPLING PROGRAM :

COLLECTED BY : E ABAD DELIVERED BY : EPA
COMMENTS : PESTS/PCB/ORGANICS/HERBS
[illegible]ING CODE : PW30 AGENCY ROUTING : -- UNIT CODE :
[illegible]YPE CODE : SAMPLE PURPOSE CODE : - REPORTING INDICATOR : B

DATE RECEIVED : 920501 TIME RECEIVED : 1110 RECEIVED BY : A P
LAB OBSERVATIONS : 1 GAL WATER TRIP BL SAM# :
SUPERVISORS INITIALS : JTH NOTE : K = LESS THAN VALUE

6/3/92
mze

P39340	GAMMA-BHC (LINDANE)	UG/L : .01K
P39410	HEPTACHLOR	UG/L : .01K
P39330	ALDRIN	UG/L : .01K
P39420	HEPTACHLOR EPOXIDE	UG/L : .01K
P39348	ALPHA-CHLORDANE	UG/L : .01K
P39810	GAMMA-CHLORDANE	UG/L : .01K
P39380	DIELDRIN	UG/L : .01K
P39390	ENDRIN	UG/L : .01K
P39480	METHOXYCHLOR	UG/L : .05K
P39327	O,P'-DDE	UG/L : .01K
P39320	P,P'-DDE	UG/L : .01K
P39315	O,P'-DDD	UG/L : .01K
[illegible]9310	P,P'-DDD	UG/L : .01K
P39305	O,P'-DDT	UG/L : .01K
P39300	P,P'-DDT	UG/L : .01K
P39516	TOTAL PCBS	UG/L : 0.1K
P34694	PHENOL	UG/L : 5.0K
P34273	BIS(2-CHLOROETHYL)ETHER	UG/L : 5.0K
P34586	2-CHLOROPHENOL	UG/L : 5.0K
P34566	1,3-DICHLOROBENZENE	UG/L : 5.0K
P34571	1,4-DICHLOROBENZENE	UG/L : 5.0K
P77147	BENZYL ALCOHOL	UG/L : 5.0K
P34536	1,2-DICHLOROBENZENE	UG/L : 5.0K
A00000	2-METHYLPHENOL	UG/L : 5.0K
P34283	BIS(2-CHLOROISOPROPYL)ETHER	UG/L : 5.0K
A00000	4-METHYLPHENOL	UG/L : 5.0K
[illegible]8	N-NITROSO-DI-N-PROPYLAMINE	UG/L : 5.0K
[illegible]	HEXACHLOROETHANE	UG/L : 5.0K
P34447	NITROBENZENE	UG/L : 5.0K

[illegible]4408	ISOPHORONE	UG/L :	5.0K
P34591	2-NITROPHENOL	UG/L :	5.0K
P34606	2,4-DIMETHYLPHENOL	UG/L :	5.0K
P77247	BENZOIC ACID	UG/L :	50K
P3[illegible]78	BIS(2-CHLOROETHOXY)METHANE	UG/L :	5.0K
P34601	2,4-DICHLOROPHENOL	UG/L :	5.0K
P34551	1,2,4-TRICHLOROBENZENE	UG/L :	5.0K
P34696	NAPHTHALENE	UG/L :	5.0K
A00000	4-CHLOROANILINE	UG/L :	5.0K
P34391	HEXACHLOROBUTADIENE	UG/L :	5.0K
P34452	4-CHLORO-3-METHYLPHENOL	UG/L :	5.0K
P77416	2-METHYLNAPHTHALENE	UG/L :	5.0K
P34386	HEXACHLOROCYCLOPENTADIENE	UG/L :	5.0K
P34621	2,4,6-TRICHLOROPHENOL	UG/L :	5.0K
P77687	2,4,5-TRICHLOROPHENOL	UG/L :	5.0K
P34581	2-CHLORONAPHTHALENE	UG/L :	5.0K
A00000	2-NITROANILINE	UG/L :	10K
P34341	DIMETHYLPHTHALATE	UG/L :	5.0K
P34200	ACENAPHTHYLENE	UG/L :	5.0K
P34526	2,6-DINITROTOLUENE	UG/L :	5.0K
P78300	3-NITROANILINE	UG/L :	10K
P34205	ACENAPHTHENE	UG/L :	5.0K
P34616	2,4-DINITROPHENOL	UG/L :	10K
P34646	4-NITROPHENOL	UG/L :	10K
P[illegible]502	DIBENZOFURAN	UG/L :	5.0K
P34611	2,4-DINITROTOLUENE	UG/L :	5.0K
P34336	DIETHYLPHTHALATE	UG/L :	5.0K
P34641	4-CHLOROPHENYL PHENYL ETHER	UG/L :	5.0K
P34381	FLUORENE	UG/L :	5.0K
A00000	4-NITROANILINE	UG/L :	10K
A00000	4,6-DINITRO-2-METHYLPHENOL	UG/L :	10K
P34636	4-BROMOPHENYL PHENYL ETHER	UG/L :	5.0K
P39700	HEXACHLOROBENZENE	UG/L :	5.0K
P39032	PENTACHLOROPHENOL	UG/L :	10K
P34461	PHENANTHRENE	UG/L :	5.0K
P34220	ANTHRACENE	UG/L :	5.0K
P39110	DI-N-BUTYLPHTHLATE	UG/L :	5.0K
P34376	FLUORANTHENE	UG/L :	5.0K
P34469	PYRENE	UG/L :	5.0K
P34292	BUTYL BENZYL PHTHALATE	UG/L :	5.0K
P34631	3,3'-DICHLOROBENZIDINE	UG/L :	10K
P34526	BENZO(A)ANTHRACENE	UG/L :	5.0K
P34320	CHRYSENE	UG/L :	5.0K

P39100	BIS(2-ETHYLHEXYL)PHTHALATE	UG/L	: 5.0K
P34596	DI-N-OCTYLPHTHALATE	UG/L	: 5.0K
P34230	BENZO(B)FLUORANTHENE	UG/L	: 5.0K
P34242	BENZO(K)FLUORANTHENE	UG/L	: 5.0K
P34247	BENZO(A)PYRENE	UG/L	: 5.0K
[illegible]3	INDENO(1,2,3-CD)PYRENE	UG/L	: 5.0K
[illegible]56	DIBENZO(AH)ANTHRACENE	UG/L	: 5.0K
P34521	BENZO(GHI)PERYLENE	UG/L	: 5.0K

Illinois Environmental Protection Agency

[redacted]

PESTICIDES, PCB, ORGANICS
HERBICIDES

Waukegan
Fac No. 097 1300

Samples Scheduled During:

Date and Time in Laboratory:

Received By: AP MAY 1 1992

1. Mail Report To: Name: Frank Cross	2. Date Collected: 4/29/92
Address: City Hall, 106 North Utica St.	3. Time Collected: 11:30 AM
Post Office: Waukegan State: IL Zip Code: 60085	4. Sample Collector: E. ABAD/AE
COLLECTOR: Fill in shaded area only. Type or use black ball point pen. See reverse side for explanations and instructions.	5. Sampling Point: Raw
	6. Temperature: ☐ Celcius ☐ Fahrenheit
	7. pH:
	8. Chlorine Residual:

PARAMETER	Concentration µg/l	PARAMETER	Concentration µg/l
methylene chloride			
1,1-dichloroethane			
dichloroethylene			
chloroform			
1,2-dichloroethane			
1,1,1-trichloroethane			
carbon tetrachloride			
dichlorobromomethane			
trichloroethylene			
dibromochloromethane			
bromoform			
tetrachloroethylene			
benzene			
toluene			
chlorobenzene			
ethylbenzene			
xylenes (total)			
dichlorobenzene			

-Laboratory Use Only-

Laboratory Number: D216752

Date Forwarded: 5-28-92 By: J Hurley

-DPWS Use Only-

RECEIVED

JUN 01 1992

Environmental Protection Agency
State of Illinois

This Agency is authorized to require this information under ILLINOIS REVISED STATUTES, 1979, Chapter 111½, Sec. 1019. Disclosure of this information is required. Failure to do so may result in a civil penalty up to $10,000.00 and an additional civil penalty up to $1,000.00 for each day the failure continues, a fine up to $1,000.00 and imprisonment up to one year. This form has been approved by the Forms Management Center.

IL 532-1310
PWSC 149 7/95

34408	ISOPHORONE	UG/L	: 5.0K
34591	2-NITROPHENOL	UG/L	: 5.0K
34606	2,4-DIMETHYLPHENOL	UG/L	: 5.0K
77247	BENZOIC ACID	UG/L	: 50K
34278	BIS(2-CHLOROETHOXY)METHANE	UG/L	: 5.0K
34601	2,4-DICHLOROPHENOL	UG/L	: 5.0K
34551	1,2,4-TRICHLOROBENZENE	UG/L	: 5.0K
34696	NAPHTHALENE	UG/L	: 5.0K
00000	4-CHLOROANILINE	UG/L	: 5.0K
34391	HEXACHLOROBUTADIENE	UG/L	: 5.0K
34452	4-CHLORO-3-METHYLPHENOL	UG/L	: 5.0K
77416	2-METHYLNAPHTHALENE	UG/L	: 5.0K
34386	HEXACHLOROCYCLOPENTADIENE	UG/L	: 5.0K
34621	2,4,6-TRICHLOROPHENOL	UG/L	: 5.0K
77687	2,4,5-TRICHLOROPHENOL	UG/L	: 5.0K
34581	2-CHLORONAPHTHALENE	UG/L	: 5.0K
A00000	2-NITROANILINE	UG/L	: 10K
P34341	DIMETHYLPHTHALATE	UG/L	: 5.0K
P34200	ACENAPHTHYLENE	UG/L	: 5.0K
P34626	2,6-DINITROTOLUENE	UG/L	: 5.0K
P78300	3-NITROANILINE	UG/L	: 10K
P34205	ACENAPHTHENE	UG/L	: 5.0K
P34616	2,4-DINITROPHENOL	UG/L	: 10K
P34646	4-NITROPHENOL	UG/L	: 10K
P81302	DIBENZOFURAN	UG/L	: 5.0K
P34611	2,4-DINITROTOLUENE	UG/L	: 5.0K
P34336	DIETHYLPHTHALATE	UG/L	: 5.0K
P34641	4-CHLOROPHENYL PHENYL ETHER	UG/L	: 5.0K
P34381	FLUORENE	UG/L	: 5.0K
A00000	4-NITROANILINE	UG/L	: 10K
A00000	4,6-DINITRO-2-METHYLPHENOL	UG/L	: 10K
P34636	4-BROMOPHENYL PHENYL ETHER	UG/L	: 5.0K
P39700	HEXACHLOROBENZENE	UG/L	: 5.0K
P39032	PENTACHLOROPHENOL	UG/L	: 10K
P34461	PHENANTHRENE	UG/L	: 5.0K
P34220	ANTHRACENE	UG/L	: 5.0K
P39110	DI-N-BUTYLPHTHLATE	UG/L	: 5.0K
P34376	FLUORANTHENE	UG/L	: 5.0K
P34469	PYRENE	UG/L	: 5.0K
P34292	BUTYL BENZYL PHTHALATE	UG/L	: 5.0K
P34631	3,3'-DICHLOROBENZIDINE	UG/L	: 10K
P34526	BENZO(A)ANTHRACENE	UG/L	: 5.0K
P34320	CHRYSENE	UG/L	: 5.0K

39100	BIS(2-ETHYLHEXYL)PHTHALATE	UG/L	: 5.0K
34596	DI-N-OCTYLPHTHALATE	UG/L	: 5.0K
34230	BENZO(B)FLUORANTHENE	UG/L	: 5.0K
3 2	BENZO(K)FLUORANTHENE	UG/L	: 5.0K
34247	BENZO(A)PYRENE	UG/L	: 5.0K
34403	INDENO(1,2,3-CD)PYRENE	UG/L	: 5.0K
34556	DIBENZO(AH)ANTHRACENE	UG/L	: 5.0K
34521	BENZO(GHI)PERYLENE	UG/L	: 5.0K

SAMPLE COLLECTED BY: [illegible]

LOCATION OF SAMPLING POINT: Waukegan - WTP

BASIN: Lake Michigan | SUB BASIN OR NONE ENTER INDIRECT: Direct | TRIBUTARY: | MINOR TRIB.:

SEND ORIGINAL OF RESULTS TO: Copy to Basin | SUB-BASIN OFFICE | ☒ PERFORMANCE MEASUREMENT SECTION, SPRINGFIELD | SEND COPY OF RESULTS TO ☐

CARD COL. 1	1	CARD NO. 1	CARD COL. 1	2	CARD NO. 2	CARD COL. 1	3	CARD NO.
2-3	OH	BASIN CODE	6-7	07	PLANT OR STATION NO.	8-10		FIPS COUNTY CODE (USE ONLY FOR U.S.)
11-17	C009413	LAB ID NO.	11-17	C009413	LAB ID NO.	11-17	C009413	
18	S	SAMPLE TYPE CODE (SEE LIST BELOW)	18	S	SAMPLE TYPE CODE	18	S	SAMPLE TYPE CODE
18-20	73	YEAR						
21-22	05	MONTH						
23-24	14	DAY						
25-26	02	HOUR IN EARST)						
27	1	TIME OF DAY (A.P.M.)						
28-30	47	WATER TEMPERATURE (DEG. F.)						
31-33		FIELD O.D.						
PH (UNITS)	8.1 (34-36)		ARSENIC	0.00 (14-17)		PLANKTON (NO./ML)	3200 (18-21)	
TOTAL PHOSPHORUS	0.015 (37-40)		BARIUM	0.0 (23-25)		FLUORIDE	0 (24-25)	
AVG. BOD.	(41-44)		BORON	0.0 (26-28)		CHLORIDE	8 (27-30)	
C.O.D.	7. (41-44)		CADMIUM	0.00 (29-32)		SULFATE AS SO4	32 (31-34)	
PHENOLS	0.000 (45-48)		CHROMIUM (HEX)	(33-35)		TOTAL SULFUR AS S	(33-36)	
FECAL COL. (NO./100ML)	<2 (49-53)		CHROMIUM (TRI)	(36-38)		OIL	(33-42)	
AMMONIA N	0.05 (55-59)		CHROMIUM (TOTAL)	0.0 (39-41)		M.B.A.S.	0 (43-46)	
NITRATE T NITRITE N	0.6 (60-63)		COPPER	0.0 (42-45)		CARBON CHLOROFORM EXTRACT	(47-50)	
ORGANIC N	(64-66)		CYANIDE	0.00 (46-49)		TURBIDITY (UNITS)	1 (51-54)	
TOTAL N	(67-69)		IRON (TOTAL)	0.1 (50-53)		RESIDUE ON EVAPORATION	(55-58)	
T.D.S./E.C.	170 (70-72)		IRON DISSOLVED	(54-55)		VOLATILE SUSP. SOLIDS	(59-62)	
TOTAL SUSP. SOLIDS	(73-76)		LEAD	0.00 (56-60)		COLOR (UNITS)	2 (63-65)	
	(77-80)		MANGANESE	0.0 (61-63)		HARDNESS	130 (66-68)	
			MERCURY (MICROGM/L)	0.0 (64-66)		ALKALINITY	105 (69-71)	
			NICKEL	0.0 (67-69)		TOTAL ACIDITY	(72-74)	
			SELENIUM	0.00 (70-72)		FREE ACIDITY	(75-77)	
			SILVER	(73-76)				
			ZINC	0.0 (77-78)				

ALL RESULTS EXPRESSED AS MG/L EXCEPT WHERE OTHERWISE STATED.

OTHER TESTS REQUIRED — RESU

Radium 226

Strontium 90

PHYSICAL OBSERVATIONS & COMMENTS (ABNORMAL COLOR, ODOR, FLOATING MATTER, SLUDGE, TURBIDITY, WEATHER), LOCATION OF SAMPLING POINT:

WTP - B

Gross Beta

SAMPLE TYPE CODES:

A = DOMESTIC WASTE ONLY
E = INDUSTRIAL WASTE ONLY
I = MIXED DOMESTIC & INDUSTRIAL WASTE
S = STREAM, LAKE, OR RECEIVING WATER QUALITY
T = MINE DRAINAGE OR WASTE
X = OTHER OR TYPE UNKNOWN

SIGN BELOW FOR EFFLUENT SAMPLE

TRANSPORTED BY: _____

RECEIVED BY: _____ TIME: _____

TRANSPORTED BY: _____

RECEIVED BY: _____ TIME: _____

FOR LABORATORY USE ONLY

SAMPLE RECEIVED BY: James L. Fiddle

DATE REC'D 5/14/73 TIME REC'D 4:50

DATE ANALYSES COMPLETED 5-24-73

DATE RESULTS FORWARDED 5-25-73

TOTAL TESTS REQUESTED 31 TESTS RUN 31

LAB SECTION Chicago SUPERVISOR P. Makarew

WPC-120 REV. 7/72

202 WATER QUALITY AND WASTE TREATMENT WORKS EFFLUENT SAMPLING FORM

SAMPLE COLLECTED BY: W. Portuscazo

LOCATION OF SAMPLING POINT: Waukegan - WTP

C00259 JUL1273

BASIN: Michigan | SUB BASIN (IF NONE ENTER "DIRECT"): Direct | TRIBUTARY: | MINOR TRIBUTARY:

SEND ORIGINAL OF RESULTS TO: Copy to Basin | SUB-BASIN OFFICE | PERFORMANCE MEASUREMENT SECTION, SPRINGFIELD | SEND COPY OF RESULTS TO: EDP SERVICES SECTION SPRI...

CARD COL. 1	1	CARD NO. 1	CARD COL. 1	2	CARD NO. 2	CARD COL. 1	3	CARD NO.
2-5	Q II	BASIN CODE	6-7	0 7	PLANT OR STATION NO.	8-10		FIPS COUNTY CODE (USE ONLY FOR ...)
11-17	C00259	LAB ID NO.	11-17	C00259	LAB ID NO.	11-17	C00259	L... ID
18	S	SAMPLE TYPE CODE (SEE LIST BELOW)	18	S	SAMPLE TYPE CODE	18	S	SAMPLE TYPE CODE
19-20	73	YEAR						
21-22	07	MONTH						
23-24	12	DAY						
25-26	02	HOUR (NEAREST)						
27	P	TIME OF DAY (A,P,N.)						
28-30	67	WATER TEMPERATURE (DEG. F.)						
31-33		FIELD C.O.						
PH (UNITS)	7.9	34-36	ARSENIC	0.000	19-22	PLANKTON (NO/ML)	2800	19-23
TOTAL PHOSPHORUS	0.006	37-40	BARIUM	0.0	23-25	FLUORIDE	0.4	24-26
AVG. COD.			BORON	0.0	26-28	CHLORIDE	37	27-30
C.O.D.	7.4	41-44	CADMIUM	0.00	29-32	SULFATE AS SO4	17	31-34
PHENOLS	0.000	45-48	CHROMIUM (HEX)		33-35	TOTAL SULFUR AS S		33-36
FECAL COLI (NO./100ML)	<2	49-52	CHROMIUM (TRI)			OIL		33-42
AMMONIA N	0.05	53-56	CHROMIUM (TOTAL)	0.00	36-38	M.B.A.S.	0.2	43-46
NITRATE + NITRITE AS N	0.3	57-60	COPPER	0.00	39-41	CARBON CHLOROFORM EXTRACT		47-50
ORGANIC N		61-63	CYANIDE	0.00	42-45	TURBIDITY (UNITS)	2	51-54
TOTAL N		64-66	IRON (TOTAL)	0.1	48-49	RESIDUE ON EVAPORATION		55-58
T.D.S./E.C.	170	67-69	IRON (DISSOLVED)		50-53	VOLATILE SUSP. SOLIDS		59-62
TOTAL SUSP. SOLIDS		70-72	LEAD	0.00	54-56	COLOR (UNITS)	3	59-62
		73-76	MANGANESE	0.00	57-59	HARDNESS	120	63-65
		77-80	MERCURY (MICROGM/L)	0.0	60-62	ALKALINITY	104	66-68
			NICKEL	0.0	63-65	TOTAL ACIDITY		69-71
			SELENIUM	0.00	66-68	FREE ACIDITY		72-74
			SILVER		69-72			75-77
			ZINC	0.0	73-76			

OTHER TESTS REQUIRED — RESU...

Radium 226

Strontium 90

ALL RESULTS EXPRESSED AS MG/L EXCEPT WHERE OTHERWISE STATED.

PHYSICAL OBSERVATIONS & COMMENTS (ABNORMAL COLOR, ODOR, FLOATING MATTER, ... SLUDGE, TURBIDITY, WEATHER), LOCATION OF SAMPLING POINT.

WTP - B

Gross Beta

SAMPLE TYPE CODES.

A = DOMESTIC WASTE ONLY
E = INDUSTRIAL WASTE ONLY
I = MIXED DOMESTIC & INDUSTRIAL WASTE
S = STREAM, LAKE, OR RECEIVING WATER QUALITY
T = MINE DRAINAGE OR WASTE
X = OTHER OR TYPE UNKNOWN

SIGN BELOW FOR EFFLUENT SAMPLE

TRANSPORTED BY _____

RECEIVED BY _____ TIME _____

TRANSPORTED BY _____

RECEIVED BY _____ TIME _____

FOR LABORATORY USE ONLY

SAMPLE RECEIVED BY K. King

DATE REC'D 7-12-73 TIME REC'D 4:40 PM

DATE ANALYSES COMPLETED 8-2-73

DATE RESULTS FORWARDED 8-3-73

TOTAL TESTS REQUESTED 31 TESTS RUN 31

LAB SECTION C. Rueppel SUPERVISOR P. Makowski

WPC-129 REV. 7/72

202

WATER QUALITY AND WASTE TREATMENT WORKS EFFLUENT SAMPLING FORM

SAMPLE COLLECTED BY	LOCATION OF SAMPLING POINT	
W. Matsunaga	Waukegan - WTP	C00259 JUL12'73

BASIN	SUB BASIN (IF NONE ENTER "DIRECT")	TRIBUTARY	MINOR TRIBUTARY
Lake Michigan	Direct		

SEND ORIGINAL OF RESULTS TO: Copy to Basin — SUB-BASIN OFFICE — PERFORMANCE MEASUREMENT [X] SECTION, SPRINGFIELD — SEND COPY OF RESULTS TO: [X] EOP SECTION SPRING

CARD COL. 1	1	CARD NO. 1	CARD COL. 1	2	CARD NO. 2	CARD COL. 1	3	CARD NO.
2-5	Q H	BASIN CODE	6-7	0 7	PLANT OR STATION NO.	8-10		FIPS COUNTY CODE (USE ONLY FOR PL
11-17	C00259	LAB ID NO.	11-17	C00259	LAB ID NO.	11-17	C00259	LAB ID

18	S	SAMPLE TYPE CODE (SEE LIST BELOW)	18	S	SAMPLE TYPE CODE	18	S	SAMPLE TYPE CODE
19-20	73	YEAR	ARSENIC	0 0 0 0		PLANKTON (NO/ML)	2 6 0 0	19-23
21-22	07	MONTH	BARIUM	0 0	19-23	FLUORIDE	0	24-26
23-24	12	DAY	BORON	0 0	23-25	CHLORIDE	8	27-30
25-26	02	HOUR (NEAREST)	CADMIUM	0 0 0	26-28	SULFATE AS SO4	17	31-34
27	P	TIME OF DAY (A,P,N,)	CHROMIUM (HEX)		29-32	TOTAL SULFUR AS S		33-38
28-30	67	WATER TEMPERATURE (DEG. F.)	CHROMIUM (TRI)		33-35	OIL		39-42
31-33		FIELD D.O.	CHROMIUM (TOTAL)	0 0 0	36-38	M.B.A.S.	0	43-45
PH (UNITS)	7 9	34-36	COPPER	0 0 0	39-41	CARBON CHLOROFORM EXTRACT		47-50
TOTAL PHOSPHORUS	0 0 0 6	37-40	CYANIDE	0 0 0	42-45	TURBIDITY (UNITS)	2	51
AVG. BOD.		43-44	IRON (TOTAL)	0 1	45-49	RESIDUE ON EVAPORATION		55-58
C.O.D.	7	45-48	IRON (DISSOLVED)		50-53	VOLATILE SUSP. SOLIDS		59-62
PHENOLS	0 0 0 0	49-52	LEAD	0 0 0	54-56	COLOR (UNITS)	2	63-65
	<2	FECAL COL. (NO./100ML)	MANGANESE	0 0 0	57-60	HARDNESS	1 3 0	66-68
AMMONIA N	0 0 5	53-59	MERCURY (MICROGM/L)	0 0	61-63	ALKALINITY	1 0 4	69-71
NITRATE T NITRATE N	0 3	60-63	NICKEL	0 0	64-66	TOTAL ACIDITY		72-74
ORGANIC N		64-66	SELENIUM	0 0 0	67-69	FREE ACIDITY		75-77
TOTAL N		67-69	SILVER		70-72			
T.D.S./E.C.	1 7 0	70-72	ZINC	0 0	73-76			
TOTAL SUSP. SOLIDS		73-76			77-79			
		77-80						

OTHER TESTS REQUIRED — RESUL

Radium 226

Strontium 90

ALL RESULTS EXPRESSED AS MG/L EXCEPT WHERE OTHERWISE STATED.

PHYSICAL OBSERVATIONS & COMMENTS (ABNORMAL COLOR, ODOR, FLOATING MATTER, SLUDGE, TURBIDITY, WEATHER), LOCATION OF SAMPLING POINT:

WTP - B Gross Beta

SAMPLE TYPE CODES:

A = DOMESTIC WASTE ONLY
E = INDUSTRIAL WASTE ONLY
I = MIXED DOMESTIC & INDUSTRIAL WASTE
S = STREAM, LAKE, OR RECEIVING WATER QUALITY
T = MINE DRAINAGE OR WASTE
X = OTHER OR TYPE UNKNOWN

SIGN BELOW FOR EFFLUENT SAMPLE

TRANSPORTED BY _____

RECEIVED BY _____ TIME _____

TRANSPORTED BY _____

RECEIVED BY _____ TIME _____

FOR LABORATORY USE ONLY

SAMPLE RECEIVED BY K. King

DATE REC'D 7-12-73 TIME REC'D 4:40 PM

DATE ANALYSES COMPLETED 8-2-73

DATE RESULTS FORWARDED 8-3-73

TOTAL TESTS REQUESTED 31 TESTS RUN 31

LAB SECTION C. Chicago SUPERVISOR P. Makarchuk

WPC-129 REV. 7/72

WATER QUALITY AND WASTE TREATMENT PLANT EFFLUENT SAMPLING FORM

SAMPLE COLLECTED BY: D. [illegible]

LOCATION OF SAMPLING POINT: Waukegan - WTP

BASIN: Michigan | SUB-BASIN (IF NONE ENTER "DIRECT"): Direct | TRIBUTARY: | MINOR TRIBUTARY:

SEND ORIGINAL OF RESULTS TO: Copy to Basin | SUB-BASIN OFFICE | ☐ PERFORMANCE MEASUREMENT SECTION, SPRINGFIELD | SEND COPY OF RESULTS TO ☐ [illegible]

CARD COL. 1	1	CARD NO. 1	CARD COL. 1	2	CARD NO. 2	CARD COL. 1	3	CARD NO.
2-5	Q H	BASIN CODE	6-7	0 7	PLANT OR STATION NO.	9-10		FIPS COUNTY COD (USE ONLY FOR P
11-17	C001104	LAB ID NO.	11-17	C001104	LAB ID NO.	11-17	C001104	
18	S	SAMPLE TYPE CODE (SEE LIST BELOW)	18	S	SAMPLE TYPE CODE	18	S	SAMPLE TYPE CODE

19-20	7 3	YEAR	ARSENIC	0 0 0 0 (19-22)		PLANKTON (NO./ML)	2 5 0 0 (19-23)	
21-22	0 8	MONTH	BARIUM	0 0 (23-25)		FLUORIDE	0 (24-26)	
23-24	1 5	DAY	BORON	0 0 (26-28)		CHLORIDE	8 (27-30)	
25-26	0 2	HOUR (NEAREST)	CADMIUM	0 0 0 (29-32)		SULFATE AS SO4	1 2 (31-34)	
27	P	TIME OF DAY (A.M.)	CHROMIUM (HEX)	(33-35)		TOTAL SULFUR AS S	(33-38)	
28-30	2 0	WATER TEMPERATURE (DEG. F.)	CHROMIUM (TRI)			OIL		
31-33		FIELD D.O.	CHROMIUM (TOTAL)	0 0 0 (39-41)		M.B.A.S.	0 (39-42)	
PH (UNITS)	8 6 (34-36)		COPPER	0 0 0 (42-45)		CARBON CHLOROFORM EXTRACT	(43-46)	
PHOSPHORUS AL	0 1 0 8 (37-40)		CYANIDE	0 0 0 (46-49)		TURBIDITY (UNITS)	3 (47-50)	
T.O.C.	7 (43-44)		IRON (TOTAL)	0 0 (50-53)		RESIDUE ON EVAPORATION	(51-54)	
PHENOLS	0 0 1 3 (45-48)		IRON (DISSOLVED)	(54-56)		VOLATILE SUSP. SOLIDS	(55-58)	
FECAL COLI (NO./100ML)	6 1 0 (49-52)		LEAD	0 0 0 (57-60)		COLOR (UNITS)	2 (59-62)	
AMMONIA N	0 0 5 (53-56)		MANGANESE	0 0 0 (61-63)		HARDNESS	1 3 0 (63-66)	
NITRATE + NITRITE AS N	0 2 (57-60)		MERCURY (MICROGM/L)	0 0 (64-66)		ALKALINITY	1 0 4 (67-71)	
ORGANIC N	(61-63)		NICKEL	0 0 (67-69)		TOTAL ACIDITY	(72-74)	
TOTAL N	(64-66)		SELENIUM	0 0 0 (70-72)		FREE ACIDITY	(73-77)	
T.D.S./E.C.	1 7 0 (67-70)		SILVER					
TOTAL SUSP. SOLIDS	(71-74)		ZINC	0 0 (73-76)				

ALL RESULTS EXPRESSED AS MG/L EXCEPT WHERE OTHERWISE STATED.

OTHER TESTS REQUIRED — RESU

Radium 226

Strontium 90

PHYSICAL OBSERVATIONS & COMMENTS (ABNORMAL COLOR, ODOR, FLOATING MATTER SLUDGE, TURBIDITY, WEATHER), LOCATION OF SAMPLING POINT:

WTP - B

Gross Beta

SAMPLE TYPE CODES:

A = DOMESTIC WASTE ONLY
E = INDUSTRIAL WASTE ONLY
I = MIXED DOMESTIC & INDUSTRIAL WASTE
S = STREAM, LAKE, OR RECEIVING WATER QUALITY
F = MINE DRAINAGE OR WASTE
X = OTHER OR TYPE UNKNOWN

SIGN BELOW FOR EFFLUENT SAMPLE

TRANSPORTED BY: _____

RECEIVED BY: _____ TIME: _____

TRANSPORTED BY: _____

RECEIVED BY: _____ TIME: _____

FOR LABORATORY USE ONLY

SAMPLE RECEIVED BY: Carol L. Liebl

DATE REC'D: 8-15-73 TIME REC'D: 5:40

DATE ANALYSES COMPLETED: 8-28-73

DATE RESULTS FORWARDED: 8-29-73

TOTAL TESTS REQUESTED: 34 TESTS RUN: 3[illegible]

LAB SECTION: Chicago SUPERVISOR: P. Maharaj

WPC-129 REV. 7/72

WATER QUALITY AND WASTE TREATMENT WORKS EFFLUENT SAMPLING FORM

SAMPLE COLLECTED BY	LOCATION OF SAMPLING POINT
Kolczak	Waukegan - WTP

BASIN	SUB-BASIN (IF NONE ENTER "DIRECT")	TRIBUTARY	MINOR TRIBUTARY
Lake Michigan	Direct		

SEND ORIGINAL OF RESULTS TO: Copy to Basin — SUB-BASIN OFFICE — ☒ PERFORMANCE MEASUREMENT SECTION, SPRINGFIELD — SEND COPY OF EOPSE RESULTS TO: ☒ SECTION,

CARD COL. 1 1 . CARD NO. 1	CARD COL. 1 2 CARD NO. 2	CARD COL. 1 3 CARD NO.
2-3 Q H — BASIN CODE	6-7 0 7 — PLANT OR STATION NO.	8-13 — FIPS COUNTY CODE (USE ONLY FOR P
11-17 C002324 — LAB ID NO.	11-17 C002324 — LAB ID NO.	11-17 C002324 — LAB ID NO.
18 S — SAMPLE TYPE CODE (SEE LIST BELOW)	18 S — SAMPLE TYPE CODE	18 S — SAMPLE TYPE CODE

19-20 YEAR	73	
21-22 MONTH	10	
23-24 DAY	01	
25-26 HOUR (NEAREST)	03	
27 TIME OF DAY (A,P,N,)	P	
28-30 WATER TEMPERATURE (DEG. F.)	64	
31-33 FIELD D.O.		
PH (UNITS) 34-36	8.2	
TOTAL PHOSPHORUS 37-40	0.000	
AVG. BOD. 41-44		
C.O.D. 45-48		
PHENOLS 49-52	0.000	
FECAL COL (NO./100ML) 53-59	12	
AMMONIA N 60-63	0.02	
NITRATE + NITRITE AS N 64-68	0.02	
ORGANIC N 67-69		
TOTAL N		
T.D.S./E.C. 73-76	1670	
TOTAL SUSP. SOLIDS 77-80		

ARSENIC 19-22	
BARIUM 23-25	
BORON 26-28	
CADMIUM 29-32	
CHROMIUM (HEX) 33-35	
CHROMIUM (TRI) 36-38	
CHROMIUM (TOTAL) 39-41	
COPPER 42-45	0.000
CYANIDE 46-49	
IRON (TOTAL) 50-53	
IRON (DISSOLVED) 54-56	
LEAD 57-60	
MANGANESE 61-63	
MERCURY (MICROGM/L) 64-66	
NICKEL 67-69	
SELENIUM 70-72	
SILVER 73-74	
ZINC 77-78	

PLANKTON (NO./ML) 19-23	1700
FLUORIDE 24-25	0.1
CHLORIDE 27-30	19
SULFATE AS SO4 31-34	
TOTAL SULFUR AS S 33-36	
OIL 39-42	
M.B.A.S. 43-46	0
CARBON CHLOROFORM EXTRACT 47-50	
TURBIDITY (UNITS) 51	4
RESIDUE ON EVAPORATION 55-58	
VOLATILE SUSP. SOLIDS 59-62	
COLOR (UNITS) 63-65	2
HARDNESS 66-68	130
ALKALINITY 69-71	104
TOTAL ACIDITY 72-74	
FREE ACIDITY 75-77	

OTHER TESTS REQUIRED — RESU
Radium 226
Strontium 90

ALL RESULTS EXPRESSED AS MG/L EXCEPT WHERE OTHERWISE STATED.

PHYSICAL OBSERVATIONS & COMMENTS (ABNORMAL COLOR, ODOR, FLOATING MATTER, SLUDGE, TURBIDITY, WEATHER), LOCATION OF SAMPLING POINT:
WTP - B
Gross Beta — 0.0 ; ± 0.0
4 K - 3.1 ; ± 0.9

SAMPLE TYPE CODES:
A = DOMESTIC WASTE ONLY
B = INDUSTRIAL WASTE ONLY
I = MIXED DOMESTIC & INDUSTRIAL WASTE
S = STREAM, LAKE, OR RECEIVING WATER QUALITY
T = MINE DRAINAGE OR WASTE
X = OTHER OR TYPE UNKNOWN

SIGN BELOW FOR EFFLUENT SAMPLE

TRANSPORTED BY _____
RECEIVED BY _____ TIME _____
TRANSPORTED BY _____
RECEIVED BY _____ TIME _____

FOR LABORATORY USE ONLY

SAMPLE RECEIVED BY P. Makarchuk
DATE REC'D 10-2-73 TIME REC'D 9:45
DATE ANALYSES COMPLETED 10-18-73
DATE RESULTS FORWARDED 10-19-73
TOTAL TESTS REQUESTED 19 TESTS RUN 19
LAB SECTION Chicago SUPERVISOR

WPC-124 REV. 7/72

K

WATER QUALITY AND WASTE TREATMENT WORKS EFFLUENT SAMPLING FORM

SAMPLE COLLECTED BY	LOCATION OF SAMPLING POINT
Kolczak	Waukegan - WTP

BASIN	SUB-BASIN (IF NONE ENTER "DIRECT")	TRIBUTARY	MINOR TRIBUTARY
La' Michigan	Direct		

ORIGINAL OF RESULTS TO: Copy to Basin — SUB-BASIN OFFICE — [X] PERFORMANCE MEASUREMENT SECTION, SPRINGFIELD — SEND COPY OF RESULTS TO: [X] EDP SERVICES SECTION SPRIN

CARD COL. 1	1 CARD NO. 1	CARD COL. 1	2 CARD NO. 2	CARD COL. 1	3 CARD NO.
2-5	Q H BASIN CODE	6-7	0 7 PLANT OR STATION NO.	8-10	FIPS COUNTY CODE (USE ONLY FOR PL
11-17	C001927 LAB ID NO.	11-17	C001927 LAB ID NO.	11-17	C001927 LA ID
18	S SAMPLE TYPE CODE (SEE LIST BELOW)	18	S SAMPLE TYPE CODE	18	S SAMPLE TYPE CODE

19-20	23	YEAR
21-22	09	MONTH
23-24	18	DAY
25-26	02	HOUR (NEAREST)
27	P	TIME OF DAY (A,P,N,)
29-30	62	WATER TEMPERATURE (DEG. F.)
31-33		FIELD D.O.
PH (UNITS)	8 4 (34-36)	
TOTAL PHOSPHORUS	0 0 0 (37-40)	
AVG. BOD.	(41-44)	
C.O.D.	3 (45-48)	
PHENOLS	0 0 0 0 (49-52)	
FECAL COL (NO./100ML)	<1 0 0 (53-59)	
AMMONIA N	0 1 4 (60-63)	
NITRATE + NITRITE AS N	0 1 (64-66)	
ORGANIC N	(67-69)	
TOTAL N	(70-72)	
T.D.S./E.C.	1 7 0 (73-76)	
TOTAL SUSP. SOLIDS	(77-80)	

ARSENIC	0 0 0 0	19-22
BARIUM	0 0	23-25
BORON	0 0	26-28
CADMIUM	0 0 0	29-32
CHROMIUM (HEX)		33-35
CHROMIUM (TRI)		36-38
CHROMIUM (TOTAL)	0 0 0	39-41
COPPER	0 0 7	42-45
CYANIDE	0 0 0	46-49
IRON (TOTAL)	0 2	50-53
IRON (DISSOLVED)		54-56
LEAD	0 0 0	57-60
MANGANESE	0 0 0	61-63
MERCURY (MICROGM/L)	0 0	64-66
NICKEL	0 0	67-69
SELENIUM	0 0 0	70-72
SILVER		73-76
ZINC	0 0	77-79

PLANKTON (NO/ML)	2 6 0 0	19-23
FLUORIDE	0	24-26
CHLORIDE	8	27-30
SULFATE AS SO4	1 8	31-34
TOTAL SULFUR AS S		33-36
OIL		39-42
M.B.A.S.	0	43-46
CARBON CHLOROFORM EXTRACT		47-50
TURBIDITY (UNITS)	3	51-54
RESIDUE ON EVAPORATION		55-58
VOLATILE SUSP. SOLIDS		59-62
COLOR (UNITS)	2	63-65
HARDNESS	1 3 0	66-68
ALKALINITY	1 0 4	68-71
TOTAL ACIDITY		72-74
FREE ACIDITY		75-77

OTHER TESTS REQUIRED	RESUL
Radium 226	
Strontium 90	

ALL RESULTS EXPRESSED AS MG/L EXCEPT WHERE OTHERWISE STATED.

PHYSICAL OBSERVATIONS & COMMENTS (ABNORMAL COLOR, ODOR, FLOATING MATTER, C SLUDGE, TURBIDITY, WEATHER), LOCATION OF SAMPLING POINT:

WTP - B

Gross Beta — 2.0 ; ± 0.

" α — 0.2 ; ± 0.

SAMPLE TYPE CODES:

A = DOMESTIC WASTE ONLY
E = INDUSTRIAL WASTE ONLY
I = MIXED DOMESTIC & INDUSTRIAL WASTE
S = STREAM, LAKE, OR RECEIVING WATER QUALITY
T = MINE DRAINAGE OR WASTE
X = OTHER OR TYPE UNKNOWN

SIGN BELOW FOR EFFLUENT SAMPLE

TRANSPORTED BY _____

RECEIVED BY _____ TIME _____

TRANSPORTED BY _____

RECEIVED BY _____ TIME _____

FOR LABORATORY USE ONLY

SAMPLE RECEIVED BY [signature]

DATE REC'D 9-18-73 TIME REC'D 7:25 P

DATE ANALYSES COMPLETED 10-11-73

DATE RESULTS FORWARDED 10-12-73

TOTAL TESTS REQUESTED 33 TESTS RUN 33

LAB SECTION Chicago SUPERVISOR [signature]

WPC-129 REV. 7/72

MINERAL ANALYSIS REPORT FORM
ILLINOIS ENVIRONMENTAL PROTECTION AGENCY
DIVISION OF PUBLIC WATER SUPPLIES

To Be Sampled During: MAR 1978

Mail Report To: Howard Peskator - Wtr. Supt.
Address: 106 N. Utica St.
Post Office: Waukegan, Il. State: 60085 Zip Code:
Supply: Surface X Well Raw 1 Hr. X Finished
Sampling Point: (Copper Tubing) 35 Min.
RAW WATER SAMPLING PUMP - MAR. 21, '78

Public Water Supply: WAUKEGAN
County: LAKE
Facility Number: 0491900
Name of Collector: KEN SHEETS
Telephone Number: (312) 689-7451
Date Collected
Region: NE

Well Supply: Well Number | Depth | Year Drilled

Well Pumped | Hours At | GPM Before Sample Collected

Surface Supply: Source: LAKE MICHIGAN
Water Inlet: LONG INTAKE 6,244'
Feet Below Surface: 28 ~~35~~

Parameter	Symbol	Reported As	mg/l*	Parameter	Symbol	Reported As	mg/l*
Iron	Fe	Fe	0.0	Fluoride	F	F	0.2
Manganese	Mn	Mn	0.01	Chloride	Cl	Cl	9.6
Calcium	Ca	Ca	35.	Nitrate	NO_3	NO_3	0.9
Magnesium	Mg	Mg	12.	Sulfate	SO_4	SO_4	26.
Ammonium	NH_4	NH_4	0.0	Alkalinity		$CaCO_3$	113.
Sodium	Na	Na	4.	Spec. Cond. (mmhos/cm)			680.
Potassium	K	K	0.8	TDS/EC			410.
Silica	Si	SiO_2	0.8	Residue on Evaporation			160.
Arsenic	As	As	0.00	pH		pH Units	8.3
Barium	Ba	Ba	0.0	Hardness		$CaCO_3$	130.
Boron	B	B	0.0	Nickel	Ni	Ni	0.0
Cadmium	Cd	Cd	0.00	Selenium	Se	Se	0.00
Chromium (Total)	Cr	Cr	0.00	Silver	Ag	Ag	0.00
Copper	Cu	Cu	0.00	Zinc	Zn	Zn	0.0
Lead	Pb	Pb	0.00	Cyanide	CN	CN	0.00
Mercury (µg/l)	Hg	Hg	0.0				

Laboratory Use Only

*Unless Otherwise Indicated

Laboratory Number B 39632
Date Received MAR 23 1978 By
Date Reviewed APR 6 1978 By
Date Forwarded APR 7 1978,
CHAMPAIGN

PWS-31

MAY 1 1978

MINERAL ANALYSIS REPORT FORM

ILLINOIS ENVIRONMENTAL PROTECTION AGENCY
DIVISION OF PUBLIC WATER SUPPLIES

To Be Sampled During: MAR 1977

Mail Report To: Waukegan Water Utility, Howard Peskator, Supt.	Public Water Supply: WAUKEGAN
Address: 106 North Utica Street	County: LAKE
Post Office: Waukegan State: Illinois Zip Code: 60085	Facility Number: 0491900
Supply: Surface X Well Raw X Finished	Name of Collector: Jon Nitsche
	Telephone Number: (312) 689-7451
Sampling Point: Raw Water Tap	Date Collected: 3/31/77 Region: NE
Well Supply: Well Number	Depth Year Drilled
Well Pumped Hours At	GPM Before Sample Collected
Surface Supply: Source: Lake Michigan	Water Inlet Feet Below Surface

Parameter	Symbol	Reported As	mg/l*	Parameter	Symbol	Reported As	mg/l*
Iron	Fe	Fe	0.0	Fluoride	F	F	0.1
Manganese	Mn	Mn	0.02	Chloride	Cl	Cl	8.3
Calcium	Ca	Ca	36.	Nitrate	NO_3	NO_3	0.9
Magnesium	Mg	Mg	12.	Sulfate	SO_4	SO_4	24
Ammonium	NH_4	NH_4	0.00	Alkalinity 116		$CaCO_3$	~~104~~
Sodium	Na	Na	6.	Spec. Cond. (mmhos/cm)			300
Potassium	K	K	1.4	TDS/EC			180
Silica	Si	SiO_2	0.6	Residue on Evaporation			131
Arsenic	As	As	0.00	pH		pH Units	8.0
Barium	Ba	Ba	0.0	Hardness		$CaCO_3$	134
Boron	B	B	0.1	Nickel	Ni	Ni	0.0
Cadmium	Cd	Cd	0.00	Selenium	Se	Se	0.00
Chromium (Total)	Cr	Cr	0.00	Silver	Ag	Ag	0.00
Copper	Cu	Cu	0.03	Zinc	Zn	Zn	0.0
Lead	Pb	Pb	0.00	Cyanide *	CN	CN	
Mercury (µg/l)	Hg	Hg	0.0				

Laboratory Use Only

*Unless Otherwise Indicated

* CN - No Bottle

Laboratory Number B 39652

Date Received 4.1.77 By MA

Date Reviewed 5/10/77 By

Date Forwarded MAY 11 1977

MAY 27 19

PWS-31

MINERAL ANALYSIS REPORT FORM
ILLINOIS ENVIRONMENTAL PROTECTION AGENCY
DIVISION OF PUBLIC WATER SUPPLIES

To Be Sampled During: MAR 1977

Mail Report To: Waukegan Water Utility, Howard Peskator, Supt.
Address: 106 North Utica Street
Post Office: Waukegan | State: Illinois | Zip Code: 60085
Supply: Surface X | Well | (Raw) | Finished
Sampling Point: Raw Water Tap
Well Supply: Well Number | Depth | Year Drilled
Well Pumped | Hours At | GPM Before Sample Collected
Surface Supply: Source: Lake Michigan | Water Inlet | Feet Below Surface

Public Water Supply: WAUKEGAN
County: LAKE
Facility Number: 0491900
Name of Collector: Jon Nitsche
Telephone Number: (312) 689-7451
Date Collected: 3/31/77
Region: NE

Parameter	Symbol	Reported As	mg/l*	Parameter	Symbol	Reported As	mg/l*
Iron	Fe	Fe	0.0	Fluoride	F	F	0.1
Manganese	Mn	Mn	0.02	Chloride	Cl	Cl	8.3
Calcium	Ca	Ca	36.	Nitrate	NO_3	NO_3	0.9
Magnesium	Mg	Mg	12.	Sulfate	SO_4	SO_4	24.
Ammonium	NH_4	NH_4	0.00	Alkalinity 116		$CaCO_3$	~~104~~
Sodium	Na	Na	6.	Spec. Cond. (mmhos/cm)			300
Potassium	K	K	1.4	TDS/EC			180
Silica	Si	SiO_2	0.6	Residue on Evaporation			131
Arsenic	As	As	0.00	pH		pH Units	8.0
Barium	Ba	Ba	0.0	Hardness		$CaCO_3$	134
Boron	B	B	0.1	Nickel	Ni	Ni	0.0
Cadmium	Cd	Cd	0.00	Selenium	Se	Se	0.000
Chromium (Total)	Cr	Cr	0.00	Silver	Ag	Ag	0.00
Copper	Cu	Cu	0.03	Zinc	Zn	Zn	0.0
Lead	Pb	Pb	0.00	Cyanide *	CN	CN	
Mercury (µg/l)	Hg	Hg	0.0				

Laboratory Use Only

*Unless Otherwise Indicated

* Cn - No Bottle

Laboratory Number B 39652
Date Received 4.1.77 By MA
Date Reviewed 5/10/77 By
Date Forwarded MAY 11 1977

MAY 27 1977

PWS-31

MINERAL ANALYSIS REPORT FORM

ILLINOIS ENVIRONMENTAL PROTECTION AGENCY
DIVISION OF PUBLIC WATER SUPPLIES

To be Sampled During: MAR 1977

Mail Report To: Waukegan Water Utility, Howard Peskator, Supt.

Address: 106 North Utica Street

Post Office: Waukegan | State: Illinois | Zip Code: 60085

Supply: Surface X | Well | Raw X | Finished

Public Water Supply: WAUKEGAN

County: LAKE

Facility Number: 0491900

Name of Collector: Jon Nitsche

Telephone Number: (312) 689-7451

Sampling Point: Raw Water Tap | Date Collected: 3/31/77 | Region: NE

Well Supply: Well Number | Depth | Year Drilled

Well Pumped | Hours At | GPM Before Sample Collected

Surface Supply: Source: Lake Michigan | Water Inlet | Feet Below Surface

Parameter	Symbol	Reported As	mg/l*	Parameter	Symbol	Reported As	mg/l*
Iron	Fe	Fe	0.0	Fluoride	F	F	0.1
Manganese	Mn	Mn	0.02	Chloride	Cl	Cl	8.3
Calcium	Ca	Ca	36.	Nitrate	NO_3	NO_3	0.9
Magnesium	Mg	Mg	12.	Sulfate	SO_4	SO_4	29.
Ammonium	NH_4	NH_4	0.00	Alkalinity 116		$CaCO_3$	~~104~~
um	Na	Na	6.	Spec. Cond. (mmhos/cm)			300
Potassium	K	K	1.4	TDS/EC			180
Silica	Si	SiO_2	0.6	Residue on Evaporation			131
Arsenic	As	As	0.00	pH		pH Units	8.0
Barium	Ba	Ba	0.0	Hardness		$CaCO_3$	134
Boron	B	B	0.1	Nickel	Ni	Ni	0.0
Cadmium	Cd	Cd	0.00	Selenium	Se	Se	0.00
Chromium (Total)	Cr	Cr	0.00	Silver	Ag	Ag	0.00
Copper	Cu	Cu	0.03	Zinc	Zn	Zn	0.0
Lead	Pb	Pb	0.00	Cyanide *	CN	CN	
Mercury (µg/l)	Hg	Hg	0.0				

Laboratory Use Only

*Unless Otherwise Indicated

* CN - Nu Bottle

Laboratory Number B 39652

Date Received 4.1.77 By MA

Date Reviewed 5/10/77 By

Date Forwarded MAY 11 1977

MAY 27 1977

PWS-31

ENVIRONMENTAL PROTECTION AGENCY

DIVISION OF PUBLIC WATER SUPPLIES

MINERAL ANALYSIS

Public Water Supply WAUKEGAN

Sampling Point [illegible] TAP County LAKE Region NE

Well # _____ Well Depth _____ Year Drilled _____ Time Coll. 9:15 AM Date Collected [illegible] 15 76

Sample: Raw X Finished _____ Time Well Pump Operated _____ hrs. Pumpage Rate _____ GPM

Collected By: SUPT. HOWARD DESKATOR Telephone No. 689-7451

PARAMETER	SYMBOL	mg/l	me/l	PARAMETER	SYMBOL	mg/l	me/l
Iron	Fe	0.3		Silica	SiO_2	1	
Manganese	Mn	0.01		Fluoride	F	0.2	
Calcium	Ca	34.		Chloride	Cl	11.	
Magnesium	Mg	12.		Nitrate	NO_3	1.8	
Ammonium	NH_4	0.17		Sulfate	SO_4	26.	
Sodium	Na	34.		Alkalinity	as $CACO_3$	262.	
Potassium	K	1.3		Hardness	as $CACO_3$		
Residue	Evap	148		Carbon Dioxide	CO_2		
Dissolved Solids by EC		190		Zinc	Zn	0.0	
Aluminum	Al			Methane	CH_4		
Arsenic	As	0.00		Phosphate	PO_4	0.02	
Barium	Ba	0.1		Phenol			
Boron	B	0.1		Oil			
Cadmium	Cd	0.00		Chromium (Tri)	Cr		
Chromium (Total)	Cr	0.00		Chromium (Hex)	Cr		
Copper	Cu	0.04		Organic Carbon			
Lead	Pb	0.00		Color			
Lithium	Li			Odor			
Mercury	Hg	0.0 ppb		Temperature	°F		
Nickel	Ni	0.0		Turbidity			
Selenium	Se	0.00		Alpha pc/l		1.0	
Silver	Ag	0.00		± deviation		0.8	
Strontium	Sr			Beta pc/l		4.2	
Cyanide	CN	0.00		± deviation		1.0	
Hydrogen Sulfide	H_2S						

NOTE: mg/l = milligrams/liter
= parts per million (ppm)
me/l = milliequivalents/l
mg/l x 0.0583 = grains/gallon

Specific Conductance 310 micromhos/cm

pH value (as received) 8.1

This space reserved for laboratory use

Lab number 47781 Rec'd By CK

Date Sample rec'd PR 15 1976 Time 10

Date Analyses Completed MAY 24 1976

Date results forwarded MAY 25 1976

Total Tests requested _____ Test Run _____

Lab section _____ Supervisor _____

Sample Meets IEPA Preservation Standards
[ ] Yes
[ ] No

100% Recycled Paper

JUN 02 19

ILLINOIS ENVIRONMENTAL ...

DIVISION OF PUBLIC WATER SUPPLIES

Samples scheduled during: APR 1980

Date and time in Laboratory: APR 14 1980 9am

Received by: pcd

(0491900)
Waukegan
Howard Peskator-Water Supt.
Sea Horse Dr.-Lake Front
Waukegan, IL 60085

2. Date and time collected: APR 11, 1980

3. Sample Collector: KEN SHEETS

4. Telephone Number: 312-689-7451

1. Mail Report to:
Name: HOWARD PESKATOR, SUPT
Address: 106 N UTICA
Post Office: WAUKEGAN State: ILL Zip Code: 60085

5. Sample Type: ☒ Raw-Surface ☐ Raw-Well No. ☐ Distribution ☐ Other

6. Sampling Point: RAW WATER TAP

7. Well data for raw sample:
Depth _____ ft.
Year Drilled _____
Pumping Rate _____ GPM
Hours Pumped _____ Hrs.

8. Surface Supply data:
Source LAKE MICHIGAN
Inlet Depth 28 ft.

COLLECTOR: Fill in shaded area only. Type or use black ball point pen. See reverse side for explanations and instructions.

Parameter	Reported As	MCL mg/l*	Concentration mg/l*
Iron	Fe	1.0	0.05
Manganese	Mn	0.15	<0.005
Calcium	Ca		39.
Magnesium	Mg		11.
Ammonium	N		<0.1
Sodium	Na		6.7
Potassium	K		1.3
Soluble Silicates	SiO_2		1.0
Arsenic	As	0.05	0.001
Barium	Ba	1.	0.02
Boron	B		0.03
Cadmium	Cd	0.010	<0.0005
Chromium (Total)	Cr	0.05	<0.005
Copper	Cu		<0.01
Lead	Pb	0.05	<0.005
Mercury	Hg	2. µg/l	<0.05 µg/l
Nickel	Ni		<0.005
Selenium	Se	0.01	<0.0005
Silver	Ag	0.05	<0.005
Zinc	Zn		<0.005

Parameter	Reported As	MCL mg/l*	Concentration mg/l*
Fluoride	F	1.8**	[illegible]
Chloride	Cl		11.
Nitrate + Nitrite	N	10	0.3
Sulfate	SO_4		25.
Alkalinity	$CaCO_3$		116.
Specific Conductance @ 25°C	mmhos/cm		260.
Total Dissolved Solids/EC	TDS		160.
Filterable Residue @ 180°C			176.
pH	pH units		[illegible]
Hardness	$CaCO_3$		123.
Cyanide	CN		<0.005

— Laboratory Use Only —

Laboratory Number: B 44532

Date Forwarded: MAY 8 1980 By: [illegible]

— DPWS Use Only —

Be <0.0001	V <0.005
Co <0.005	Al
Li 0.04	
Sr 0.13	

* Ur...
** Fo... ...lerson, McDonough, Fulton, Tazewell, McLean, Ford and Iroquois ...

PWS-31 (rev 3-79)

ILLINOIS ENVIRONMENTAL PROTECTION AGENCY

DIVISION OF PUBLIC WATER SUPPLIES

CHEMICAL ANALYSIS REPORT FORM

Samples scheduled during:

Date and time in Laboratory: 4/3/79 12:00 Noon

Received by: S P Cattner

Waukegan
Howard Peskator-Water Supt.
106 N. Utica Street
Waukegan, IL 60085

0491900

aurora

2. Date and time collected: APR 2, 1979 9:10 A

3. Sample Collector: KEN SHEETS

4. Telephone Number: 312-689-7451

1. Mail Report to:
Name: HOWARD PESKATOR, SUPT
Address: 106 N. UTICA
Post Office: WAUKEGAN State: ILL Zip Code: 60085

5. Sample Type: ☒ Raw-Surface ☐ Raw-Well No. ☐ Distribution ☐ Other

6. Sampling Point: RAW WATER STATION

7. Well data for raw sample:
Depth ____ ft.
Year Drilled ____
Pumping Rate ____ GPM
Hours Pumped ____ Hrs.

8. Surface Supply data: Raw
Source Long Intake 1 mi. long
Inlet Depth 34 ft.

COLLECTOR: Fill in shaded area only. Type or use black ball point pen. See reverse side for explanations and instructions.

Parameter	Reported As	MCL mg/l*	Concentration mg/l*
Iron	Fe		0.4
Manganese	Mn		0.02
Calcium	Ca		38
Magnesium	Mg		12
Ammonium	N		0.07
Sodium	Na		8
Potassium	K		2.3
Soluble Silicates	SO_2		1
Arsenic	As	0.05	0.000
Barium	Ba	1.	<0.1
Boron	B		0.1
Cadmium	Cd	0.010	<0.01
Chromium (Total)	Cr	0.05	<0.02
Copper	Cu		0.02
Lead	Pb	0.05	<0.01
Mercury	Hg	2. µg/l	0.0 µg/l
Nickel	Ni		<0.1
Selenium	Se	0.01	0.00
Silver	Ag	0.05	<0.02
Zinc	Zn		0.01

Parameter	Reported As	MCL mg/l*	Concentration mg/l*
Fluoride	F	1.8**	0.2
Chloride	Cl		13
Nitrate + Nitrite	N	10	0.37
Sulfate	SO_4		24
Alkalinity	$CaCO_3$		116
Specific Conductance @ 25°C	mmhos/cm		315
Total Dissolved Solids/EC	TDS		189
Filterable Residue @ 180°C			214
pH	pH units		8.3
Hardness	$CaCO_3$		145
Cyanide	CN		0.00

— Laboratory Use Only —

Laboratory Number: C003740

Date Forwarded: APR 18 1979 By: JD

— DPWS Use Only —

4-19-79 DHB

RECEIVED
MAY 3 1979
DIV. PUBLIC WATER SUPPLIES
ENVIRONMENTAL PROTECTION AGENCY
STATE OF ILLINOIS

* Unless Otherwise Indicated

** For those counties of the state North of and including Henderson, McDonough, Fulton, Tazewell, McLean, Ford and Iroquois the MCL is 2.0 mg/l.

PWS-31 (10-78)

ILLINOIS ENVIRONMENTAL PROTECTION AGENCY

DIVISION OF PUBLIC WATER SUPPLIES

Samples scheduled during: 1981

Date and time in Laboratory:

Received by:

1981 APR -7 PM 12: 22

FAC #0491900
Waukegan
Howard Peskator, Wtr. Supt.
Wtr. Plant
Sea Horse Dr. Lake Front
Waukegan, Il. 60085

Date and time collected: APRIL 3 1981 8:40 A

Collector: KEN SWEETS

4. Telephone Number: 312-689-7451

1. Mail Report to:
Name: HOWARD PESKATOR, DIRECTOR
Address: 106 N. UTICA
Post Office: WAUKEGAN State: ILL Zip Code: 60085

5. Sample Type: ☒ Raw-Surface ☐ Raw-Well No. ☐ Distribution ☐ Other

6. Sampling Point: RAW WATER TAP

7. Well data for raw sample:
Depth ____ ft.
Year Drilled ____
Pumping Rate ____ GPM
Hours Pumped ____ Hrs.

8. Surface Supply data:
Source Lake Michigan
Inlet Depth 35 ft.

COLLECTOR: Fill in shaded area only. Type or use black ball point pen. See reverse side for explanations and instructions.

Parameter	As	[MAC] mg/l	Conc. mg/l
Iron	Fe	[1.0]	0.056
Manganese	Mn	[0.5]	<0.005
Calcium	Ca	[---]	33.
Magnesium	Mg	[---]	12.
Sodium	Na	[---]	
Ammonium	N		<0.1
Sodium	Na		7.
Potassium	K		1.3
Soluble Silicates	SiO_2		1.0
Arsenic	As	[0.05]	0.001
Barium	Ba	[1.0]	0.017
Boron	B	[-----]	0.03
Cadmium	Cd	[0.010]	<0.005
Chromium	Cr	[0.05]	<0.008
Copper	Cu	[5.]	0.005
Nickel	Ni	[-----]	<0.004
Lead	Pb	0.05	<0.005
Mercury	Hg	2. µg/l	<0.05 µg/l
Nickel	Ni		
Selenium	Se	0.01	<0.0005
Silver	Ag	[0.05]	<0.005
Zinc	Zn	[5.]	0.003
Beryllium	Be	[-----]	<0.005
Cobalt	Co	[-----]	<0.005
Strontium	Sr	[-----]	0.05
Vanadium	V	[-----]	<0.10

Parameter	Reported As	MCL mg/l*	Concentration mg/l*
Fluoride	F	1.8**	0.18
Chloride	Cl		10.
Nitrate + Nitrite	N	10	0.3
Sulfate	SO_4		29.
Alkalinity	$CaCO_3$		104.
Specific Conductance @ 25°C	mmhos/cm		290.
Total Dissolved Solids/EC	TDS		170.
Filterable Residue @ 180°C			162
pH	pH units		8.0
Hardness	$CaCO_3$		127.
Cyanide	CN		<0.005

— Laboratory Use Only —

Laboratory Number: BU48218

Date Forwarded: JUN 11 1981

MTB 6-16-81

— DPWS Use Only —

ugh, Fulton,

Tazewell, McLean, Ford and Iroquois the MCL is 2.0 mg/l.

PWS 21 (rev. 3-79)

ILLINOIS ENVIRONMENTAL PROTECTION AGENCY — CHEMICAL ANALYSIS REPORT FORM

DIVISION OF PUBLIC WATER SUPPLIES

1. Public Water Supply Name: Waukegan
2. County: Lake County
3. Facility Number: 0491900
4. Mail Report to:
Name: Howard Perkerton Director
Address: 106 N. Utica
Post Office: Waukegan State: Ill Zip Code: 60085

Samples scheduled during: APR 1982
Received by:
Date and time in Laboratory: 1982 APR 27 PM 3:39

5. Date and time collected: April 25, 1982 8:55 A
6. Sample Collector: Ken Sheets
7. Telephone Number: 312-689-7451
8. Sample Type:
☐ Distribution: Sampling point address or building:
☐ Raw-Well # : Depth: Year Drilled:
Pumping rate: gpm Hours pumped:
☒ Raw-Surface: Inlet depth 35 ft.
Source: Lake Michigan

COLLECTOR: Fill in shaded area only. Type or use black ball point pen. See reverse side for explanations and instructions.

This Agency is authorized to require this information under Ill. Rev. Stat., 1979, Chapter 111-1/2, Section 1019. Disclosure of this information is required. Failure to do so may result in a civil penalty up to $10,000.00 and an additional civil penalty up to $1,000.00 for each day the failure continues, a fine up to $1,000.00 and imprisonment up to one year. This form has been approved by the forms Management Center.

Parameter	Reported As	MAC mg/l*	Concentration mg/l*
Ammonium	N		<0.1
Potassium	K		1.2

Parameter	As	[MAC] mg/l	Conc. mg/l
Iron	Fe	[1.0]	0.06
Manganese	Mn	[0.15]	0.005
Calcium	Ca	[---]	36.
Magnesium	Mg	[---]	11.4
Sodium	Na	[---]	7.
Barium	Ba	[1.]	0.020
Boron	B	[-----]	0.03
Cadmium	Cd	[0.010]	<0.003
Chromium-T	Cr	[0.05]	<0.005
Copper	Cu	[5.]	<0.003
Nickel	Ni	[-----]	<0.003
Silver	Ag	[0.05]	<0.005
Zinc	Zn	[5.]	0.002
Beryllium	Be	[-----]	<0.0005
Cobalt	Co	[-----]	<0.005
Strontium	Sr	[-----]	0.116
Vanadium	V	[-----]	<0.004

Parameter	Reported As	MAC mg/l*	Concentration mg/l*
Fluoride	F	1.8**	0.13
Chloride	Cl		9.3
Nitrate + Nitrite	N	10	0.2
Sulfate	SO_4		29.
Alkalinity (pH 4.5)	$CaCO_3$		104.
Specific Conductance @ 25°C	mmhos/cm		280.
Total Dissolved Solids/EC	TDS		170.
Filterable Residue @ 180°C	TDS		195.
pH	pH units		7.9
Hardness	$CaCO_3$		126.
Cyanide	CN	0.2	<0.005
Soluble Silicates	SiO_2		<1.0
Arsenic	As	0.05	0.001
Lead	Pb	0.05	<0.005
Mercury	Hg	2. µg/l	<0.05 µg/l
Selenium	Se	0.01	<0.001
PCB's			

-Laboratory Use Only-

Laboratory Number: MPB 6-2-82 B043061

Date Forwarded: MAY 28 1982 By: CHAMPAIGN

* Unless Otherwise Indicated

** For those counties of the State North of and including Henderson, McDonough, Fulton, Tazewell, McLean, Ford and Iroquois the MAC is 2.0 mg/l.

IL 532-0761
PWS-21 IR-W 0-211

ILLINOIS EPA

DIVISION OF PUBLIC WATER SUPPLIES

1. Public Water Supply Name: Waukegan
County: Lake County
3. Facility Number: 0491900
4. Mail Report to.
Name: HOWARD POSKATOR DIRECTOR
Address: 106 N. UTICA
Post Office: WAUKEGAN State. ILL Zip Code. 60085

COLLECTOR: Fill in shaded area only. Type or use black ball point pen. See reverse side for explanations and instructions.

This Agency is authorized to require this information under Ill. Rev. Stat., 1979, Chapter 111-1/2, Section 1019. Disclosure of this information is required. Failure to do so may result in a civil penalty up to $10,000.00 and an additional civil penalty up to $1,000.00 for each day the failure continues, a fine up to $1,000.00 and imprisonment up to one year. This form has been approved by the forms Management Center.

Samples scheduled during: APR 1983
Received by:
Date and time in Laboratory: 1983 APR 20 PM 3:16
5. Date and time collected: APRIL 19, 1983
6. Sample Collector: KEN SHEETS
7. Telephone Number: 312-689-7451
8. Sample Type:
☐ Distribution: Sampling point address or building:
☐ Raw-Well # : Depth: Year Drilled:
Pumping rate: gpm Hours pumped:
☒ Raw-Surface: Inlet depth 35 ft.
Source: LAKE MICHIGAN

Parameter	Reported As	MAC mg/l*	Concentration mg/l*
Ammonium	N		<0.1
Potassium	K		1.4 1.2

Parameter	As	[MAC] mg/l	Conc. mg/l
Iron	Fe	[1.0]	.06 1.1
Manganese	Mn	[0.15]	.005 0.060
Calcium	Ca	[---]	42. 36.
Magnesium	Mg	[---]	13. 11.4
Sodium	Na	[---]	7.
Barium	Ba	[1.]	.020 0.026
Boron	B	[-----]	0.03
Cadmium	Cd	[0.010]	<0.003
Chromium-T	Cr	[0.05]	.005 <0.007
Copper	Cu	[5.]	.003 0.007
Nickel	Ni	[-----]	.003 0.004
Silver	Ag	[0.05]	<0.005
Zinc	Zn	[5.]	.002 0.008
Beryllium	Be	[-----]	<0.0005
Cobalt	Co	[-----]	.005 0.011
Strontium	Sr	[-----]	.116 0.134
Vanadium	V	[-----]	<0.004

Parameter	Reported As	MAC mg/l*	Concentration mg/l*
Fluoride	F	1.8**	.13 0.10
Chloride	Cl		9.3 11.
Nitrate + Nitrite	N	10	.21 0.39
Sulfate	SO_4		29. 25.
Alkalinity (pH 4.5)	$CaCO_3$	125.	104 JA ~~111.~~
Specific Conductance @ 25°C	mmhos/cm	280	280 290.
Total Dissolved Solids/EC	TDS		170.
Filterable Residue @ 180°C	TDS	195	209.
pH	pH units	7.9	8.2
Hardness	$CaCO_3$	126.	133 ~~126.~~
Cyanide	CN	0.2	<0.005
Soluble Silicates	SiO_2		1.0
Arsenic	As	0.05	.001 0.002
Lead	Pb	0.05	<0.00
Mercury	Hg	2. µg/l	<0.05 µg.
Selenium	Se	0.01	<0.001

-Laboratory Use Only-

Laboratory Number: MTB 6.21.83 B 34515

Date Forwarded: JUN 15 1983 By. CHAMPAIGN

* Unless Otherwise Indicated
** For those counties of the State North of and including Henderson, McDonough, Fulton, Tazewell, McLean, Ford and Iroquois the MAC is 2.0 mg/l.

IL 532-0761
PWS-31 (Rev. 9-81)

ILLINOIS

DIVISION OF PUBLIC WATER SUPPLIES

Reg by Workman

1. Public Water Supply Name: Waukegan
2. County: Lake
3. Facility Number: 0491900
4. Mail Report to.
Name: Howard Peskatur, Director
Address: 106 N. Utica
Post Office: Waukegan State: ILL Zip Code: 60085

Samples scheduled during: 7/15/83
Received by: [signature]
Date and time in Laboratory: 1983 JUL 21 PM 3:55

5. Date and time collected: July 19, 1983 2:30P
6. Sample Collector: Ken Sheets
7. Telephone Number: 312-684-7451
8. Sample Type.

☐ Distribution: Sampling point address or building: _____

☒ Raw-Well # ____ : Depth: 35 Year Drilled: ____

Pumping rate: ____ gpm Hours pumped: ____

☒ Raw-Surface: Inlet depth 35 ft.

Source: Lake Michigan

COLLECTOR: Fill in shaded area only. Type or use black ball point pen. See reverse side for explanations and instructions.

This Agency is authorized to require this information under Ill. Rev. Stat., 1979, Chapter 111-1/2, Section 1019. Disclosure of this information is required. Failure to do so may result in a civil penalty up to $10,000.00 and an additional civil penalty up to $1,000.00 for each day the failure continues, a fine up to $1,000.00 and imprisonment up to one year. This form has been approved by the forms Management Center.

Parameter	Reported As	MAC mg/l*	Concentration mg/l*
Ammonium	N		<0.1
Potassium	K		1.4
Fluoride	F	1.8**	0.10
Chloride	Cl		8.5
Nitrate + Nitrite	N	10	0.19
Sulfate	SO_4		2
Alkalinity (pH 4.5)	$CaCO_3$		102.
Specific Conductance @ 25°C	mmhos/cm		280.
Total Dissolved Solids/EC	TDS		170.
Filterable Residue @ 180°C	TDS		160.
pH	pH units		8.0
Hardness	$CaCO_3$		138.
Cyanide	CN	0.2	<0.005
Soluble Silicates	SiO_2		<1.0
Arsenic	As	0.05	0.002
Lead	Pb	0.05	<0.005
Mercury	Hg	2. µg/l	<0.10 µg/l
Selenium	Se	0.01	<0.001

Parameter	As	[MAC] mg/l	Conc. mg/l
Iron	Fe	[1.0]	0.10
Manganese	Mn	[0.15]	0.007
Calcium	Ca	[---]	36.
Magnesium	Mg	[---]	11.
Sodium	Na	[---]	6.
Barium	Ba	[1.]	0.022
Boron	B	[-----]	0.02
Cadmium	Cd	[0.010]	<0.003
Chromium-T	Cr	[0.05]	<0.005
Copper	Cu	[5.]	0.009
Nickel	Ni	[-----]	<0.003
Silver	Ag	[0.05]	<0.005
Zinc	Zn	[5.]	0.014
Beryllium	Be	[-----]	<0.0005
Cobalt	Co	[-----]	<0.005
Strontium	Sr	[-----]	0.075
Vanadium	V	[-----]	<0.004

* Unless Otherwise Indicated

** For those counties of the State North of and including Henderson, McDonough, Fulton, Tazewell, McLean, Ford and Iroquois the MAC is 2.0 mg/l.

-Laboratory Use Only-

Laboratory Number: 3003307 MTB 8-31-83

Date Forwarded: AUG 28 1983 By: CHAMPAIGN

IL 532-0761
PWS-31 (Rev. 9-81)

ILLINOIS EPA

DIVISION OF PUBLIC WATER SUPPLIES

1. Public Water Supply Name.
Waukegan

County.
Lake County

3. Facility Number:
0971900

4. Mail Report to.
Name:
Howard Peskator, Director

Address:
106 N Utica St

Post Office: Waukegan State: Ill Zip Code: 60085

COLLECTOR: Fill in shaded area only. Type or use black ball point pen. See reverse side for explanations and instructions.

This Agency is authorized to require this information under Ill. Rev. Stat., 1979, Chapter 111-1/2, Section 1019. Disclosure of this information is required. Failure to do so may result in a civil penalty up to $10,000.00 and an additional civil penalty up to $1,000.00 for each day the failure continues, a fine up to $1,000.00 and imprisonment up to one year. This form has been approved by the forms Management Center.

Samples scheduled during MAR 1984

Received by:

Date and time in Laboratory.

5. Date and time collected: March 21 1984 8:55 A

6. Sample Collector: Ken Sheets

7. Telephone Number: 312-689-7451

8. Sample Type:

☐ Distribution: Sampling point address or building:

☐ Raw-Well # ____ : Depth: ____ Year Drilled: ____

Pumping rate: ____ gpm Hours pumped: ____

☒ Raw-Surface: Inlet depth 35 ft.

Source: Lake Michigan

Parameter	Reported As	MAC mg/l*	Concentration mg/l*
Ammonium	N		<0.1
Potassium	K		1.9
Iron	Fe	[1.0]	0.56
Manganese	Mn	[0.15]	0.019
Calcium	Ca	[---]	39.
Magnesium	Mg	[---]	12.9
Sodium	Na	[---]	6.
Aluminum	Al	[ ]	0.27
Barium	Ba	[1.]	0.018
Boron	B	[-----]	<0.05
Cadmium	Cd	[0.010]	<0.003
Chromium-T	Cr	[0.05]	<0.005
Copper	Cu	[5.]	<0.005
Nickel	Ni	[-----]	<0.005
Silver	Ag	[0.05]	<0.005
Zinc	Zn	[5.]	<0.005
Beryllium	Be	[-----]	<0.0005
Cobalt	Co	[-----]	<0.005
Strontium	Sr	[-----]	0.129
Vanadium	V	[-----]	<0.005

Parameter	Reported As	MAC mg/l*	Concentration mg/l*
Fluoride	F	1.8**	0.13
Chloride	Cl		11.
Nitrate + Nitrite	N	10	0.39
Sulfate	SO_4		23.
Alkalinity (pH 4.5)	$CaCO_3$		115.
Specific Conductance @ 25°C	mmhos/cm		300.
Total Dissolved Solids/EC	TDS		180.
Filterable Residue @ 180°C	TDS		177
pH	pH units		8.2
Hardness	$CaCO_3$		127.
Cyanide	CN	0.2	<0.005
Soluble Silicates	SiO_2		0.52
Arsenic	As	0.05	0.001
Lead	Pb	0.05	<0.005
Mercury	Hg	2. µg/l	<0.10 µg/l
Selenium	Se	0.01	<0.001
DCP's			

* Unless Otherwise Indicated

** For those counties of the State North of and including Henderson, McDonough, Fulton, Tazewell, McLean, Ford and Iroquois the MAC is 2.0 mg/l.

-Laboratory Use Only-

Laboratory Number: MIB 5-15-84 PWS 91.7

Date Forwarded MAY 10 1984 By: CHAMPAIGN

IL 532-0761
PWS-31 (Rev. 9-81)

ILLINOIS ENVIRONMENTAL PROTECTION AGENCY

DIVISION OF PUBLIC WATER SUPPLIES

1. Public Water Supply Name: Waukegan

2. County: Lake County

3. Facility Number: 0971900

4. Mail Report to:
Name: Howard Peskator, Director
Address: 106 N. Utica
Post Office: Waukegan State: Ill Zip Code: 60085

COLLECTOR: Fill in shaded area only. Type or use black ball point pen. See reverse side for explanations and instructions.

This Agency is authorized to require this information under Ill. Rev. Stat., 1979, Chapter 111-1/2, Section 1019. Disclosure of this information is required. Failure to do so may result in a civil penalty up to $10,000.00 and an additional civil penalty up to $1,000.00 for each day the failure continues, a fine up to $1,000.00 and imprisonment up to one year. This form has been approved by the forms Management Center.

Samples scheduled during: MAR 1985

Received by: pd

Date and time in Laboratory: 1:50

5. Date and time collected: MARCH 19, 1985 8:45A

6. Sample Collector: Ken Sheets

7. Telephone Number: 312-360-4000 ext 451

8. Sample Type:

☐ Distribution: Sampling point address or building:

☐ Raw-Well # : Depth: Year Drilled:

Pumping rate: gpm Hours pumped:

☒ Raw-Surface: Inlet depth 35 ft.

Source: Lake Michigan

Parameter	Reported As	MAC mg/l*	Concentration mg/l*
Ammonium	N		<0.1
Parameter	As	[MAC] mg/l	Conc. mg/l
Iron	Fe	[1.0]	0.22
Manganese	Mn	[0.15]	0.008
Calcium	Ca	[---]	39.
Magnesium	Mg	[---]	12.4
Sodium	Na	[---]	7.
Potassium	K	[---]	1.2
Aluminum	Al	[ ]	0.17
Barium	Ba	[1.]	0.019
Boron	B	[-----]	0.04
Cadmium	Cd	[0.010]	<0.003
Chromium-T	Cr	[0.05]	<0.005
Copper	Cu	[5.]	0.003
Nickel	Ni	[-----]	<0.003
Silver	Ag	[0.05]	<0.005
Zinc	Zn	[5.]	0.006
Beryllium	Be	[-----]	<0.0005
Cobalt	Co	[-----]	<0.005
Strontium	SR	[-----]	0.130
Vanadium	V	[-----]	<0.004

Parameter	Reported As	MAC mg/l*	Concentration mg/l*
Fluoride	F	1.8**	<0.1
Chloride	Cl		10.
Nitrate + Nitrite	N	10	0.7
Sulfate	SO_4		25.
Alkalinity (pH 4.5)	$CaCO_3$	JA 124.	~~108.~~
Specific Conductance @ 25°C	mmhos/cm		300.
Total Dissolved Solids/EC	TDS		190.
Filterable Residue @ 180°C	TDS		239.
pH	pH units		8.0
Hardness	$CaCO_3$		138.
Cyanide	CN	0.2	<0.005
Soluble Silicates	SiO_2		<1.0
Arsenic	As	0.05	0.001
Lead	Pb	0.05	<0.005
Mercury	Hg	2. µg/l	<0.01 µg/l
Selenium	Se	0.01	<0.001

* Unless Otherwise Indicated

** For those counties of the State North of and including Henderson, McDonough, Fulton, Tazewell, McLean, Ford and Iroquois the MAC is 2.0 mg/l.

-Laboratory Use Only-

Laboratory Number: CHAMPAIGN MB 5-23-85 B033787

Date Forwarded: MAY 21 1985 By:

IL 532-0761
PWS-31 (Rev. 9-81)

ILLINOIS ENVIRONME. .AL PROTECTION AGENCY

DIVISION OF PUBLIC WATER SUPPLIES

1. Public Water Supply Name: Waukegan

County: Lake County

3. Facility Number: 0971900

4. Mail Report to:

Name: Howard Peskator, Director

Address: 106 N. Utica St.

Post Office: Waukegan State: ILL Zip Code: 60085

COLLECTOR: Fill in shaded area only. Type or use black ball point pen. See reverse side for explanations and instructions.

This Agency is authorized to require this information under Ill. Rev. Stat., 1979, Chapter 111-1/2, Section 1019. Disclosure of this information is required. Failure to do so may result in a civil penalty up to $10,000.00 and an additional civil penalty up to $1,000.00 for each day the failure continues, a fine up to $1,000.00 and imprisonment up to one year. This form has been approved by the forms Management Center.

Samples scheduled during: MAR 1986

Received by:

Date and time in Laboratory: 1986 MAR 12 AM 11: 19

5. Date and time collected: MARCH 11, 1986 9:10A

6. Sample Collector: Ken Sheets

7. Telephone Number: 312-360-9000 ext 451

8. Sample Type:

[x] Distribution - Sampling point address or building:

[ ] Raw-Well # Depth: Year Drilled:

Pumping rate: gpm Hours pumped:

[X] Raw-Surface: Inlet depth 35 ft.

Source: Lake Michigan

Parameter	Reported As	MAC mg/l*	Concentration mg/l*
Ammonium	N		<0.1
Parameter	As	[MAC] mg/l	Conc. mg/l
Iron	Fe	[1.0]	0.26
Manganese	Mn	[0.15]	0.028
Calcium	Ca	[---]	35.
Magnesium	Mg	[---]	11.4
Sodium	Na	[---]	8.
Potassium	K	[---]	1.3
Aluminum	Al	[ ]	0.11
Barium	Ba	[1.]	0.019
Boron	B	[-----]	0.03
Cadmium	Cd	[0.010]	<0.003
Chromium-T	Cr	[0.05]	<0.005
Copper	Cu	[5.]	<0.003
Nickel	Ni	[-----]	<0.003
Silver	Ag	[0.05]	<0.005
Zinc	Zn	[5.]	0.013
Beryllium	Be	[-----]	<0.0005
Cobalt	Co	[-----]	0.007
Strontium	SR	[-----]	0.125
Vanadium	V	[-----]	<0.004

Parameter	Reported As	MAC mg/l*	Concentration mg/l*
Fluoride	F	1.8**	0.10
Chloride	Cl		12.
Nitrate + Nitrite	N	10	0.39
Sulfate	SO_4		1f.
Alkalinity (pH 4.5)	$CaCO_3$		106.
Specific Conductance @ 25°C	mmhos/cm		310.
Total Dissolved Solids/EC	TDS		190.
Filterable Residue @ 180°C	TDS		185.
pH	pH units		8.1
Hardness	$CaCO_3$		134.
Cyanide	CN	0.2	<0.005
Soluble Silicates	SiO_2		<1.0
Arsenic	As	0.05	0.001
Lead	Pb	0.05	<0.005
Mercury	Hg	2. µg/l	<0.01 µg/l
Selenium	Se	0.01	<0.001

* Unless Otherwise Indicated

** For those counties of the State North of and including Henderson, McDonough, Fulton, Tazewell, McLean, Ford and Iroquois the MAC is 2.0 mg/L

-Laboratory Use Only-

Laboratory Number: CHAMPAIGN B603395

MTB 5-1-86

Date Forwarded: APR 28 1986 By:

IL 532-0761
PWS-31 (Rev. 9-81)

Illinois Environmental Protection Agency • 2200 Churchill Road, Springfield, IL 62706

DIVISION OF PUBLIC WATER SUPPLIES — CHEMICAL ANALYSIS

FACILITY: 0971900 WAUKEGAN

FEB 19 1987

SAMPLES SCHEDULED DURING: MARCH, 1987

MAIL REPORT TO:

NAME: Howard Fortuto, Director

ADDR: 106 N. Utica St

CITY: Waukegan STATE Ill ZIP 60085

DATE COLLECTED March 11, 1987

TIME COLLECTED 9:10A

SMPL COLLECTOR Ron Sheets

PHONE NUMBER 312-360-9066 ext 451

FUNDING CODE: PW30
AGNCY ROUTING:
SAMPLE TYPE: RPWS - RAW
PURPOSE: 1 - ROUTINE
RPT INDICATOR: B
SUBMIT SRCE: 09719000121001
SMPL PROGRAM: CH - CHEMICAL
PARM GROUP: PWMAB

SAMPLE TYPE: RAW

SAMPLE LOCATION: RAW SURFACE # 21001
LK MICHIGAN INTAKE

INLET DEPTH (FT): 35

RECEIVED
REGION 2
MAY 29 1987

DIV. Public Water Supplies
State of Illinois
Environmental Protection Agency

--- LAB USE ONLY ---

SAMPLE NUMBER B703770

DATE RECEIVED MAR 12 1987

TIME RECEIVED 11A

RECEIVED BY MD

DATE FORWARDED APR 22 1987 SPVSR

CHAMPAIGN

IL 532-0761 PWS-31 (REV. 7-86)

ILLINOIS ENVIRONMENTAL PROTECTION AGENCY

SAMPLE NUMBER : 3703770
SAMPLING POINT DESC. : WAUKEGAN RAW SURFACE #21001

SUBMITTING SOURCE # : 0971900 SITE # :
DATE COLLECTED : 870311 TIME COLLECTED : 0910 SAMPLING PROGRAM : CH

COLLECTED BY : K SHEETS DELIVERED BY : UPS
COMMENTS :
FUNDING CODE : PW30 AGENCY ROUTING : 00 UNIT CODE :
SAM TYPE CODE : RPWS SAMPLE PURPOSE CODE : 1

DATE RECEIVED : 870312 TIME RECEIVED : 1100 RECEIVED BY : MAD
LAB OBSERVATIONS : REPORTING INDICATOR : B
SUPERVISORS INITIALS : RPF NOTE : K = LESS THAN VALUE

P70300	(ROE) TDS @ 180C	MG/L	158	P00410	ALKALINITY,TOTAL	MG/L	122
P00900	HARDNESS,EDTATOTAL	MG/L	145	P00630	NITRATE&NO2-NTOTAL	MG/L	0.32
P00610	AMMONIA-N,TOTAL	MG/L	0.1K	P00956	SILICA,TOTAL	MG/L	1.0K
P00951	FLUORIDE,TOTAL	MG/L	0.11	P00940	CHLORIDE,TOTAL	MG/L	12
P00945	SULFATE,TOTAL	MG/L	25	P00403	PH-LABORATORY	UNITS	7.9
P00095	CONDUCTIVITY	UM/CM	300	P00720	CYANIDE,TOTAL	MG/L	0.005
P01002	ARSENIC,TOTAL	UG/L	2	P01051	LEAD,TOT.FURNACE	UG/L	5K
P71900	MERCURY,TOTAL	UG/L	0.05K	P01147	SELENIUM,TOTAL	UG/L	1K
P00916	CALCIUM,TOTAL	MG/L	40	P00927	MAGNESIUM,TOTAL	MG/L	12
P00929	SODIUM,TOTAL	MG/L	8.2	P00937	POTASSIUM,TOTAL	MG/L	1.5
P01105	ALUMINUM,TOTAL	UG/L	241	P01007	BARIUM,TOTAL	UG/L	22
1022	BORON,TOTAL	UG/L	50K	P01012	BERYLLIUM,TOTAL	UG/L	0.5K
P01027	CADMIUM,TOTAL	UG/L	3K	P01034	CHROMIUM,TOTAL	UG/L	5K
P01042	COPPER,TOTAL	UG/L	5K	P01037	COBALT,TOTAL	UG/L	5K
P01045	IRON,TOTAL	UG/L	456	P01055	MANGANESE,TOTAL	UG/L	172
P01067	NICKEL,TOTAL	UG/L	5K	P01077	SILVER,TOTAL	UG/L	3K
P01082	STRONTIUM,TOTAL	UG/L	138	P01087	VANADIUM,TOTAL	UG/L	5K
P01092	ZINC,TOTAL	UG/L	50K	P00900	HARDNESS CALC.	MG/L	149C
I17700	ANION/CATION BAL	Y/N	Y				

RECEIVED
REGION 2
MAY 27 1987
Div. Public Water Supplies
State of Illinois
Environmental Protection Agency

FEB 25 1988

Illinois Environmental Protection Agency • 2200 Churchill Road, Springfield, IL 62706

DIVISION OF PUBLIC WATER SUPPLIES — CHEMICAL ANAL S

FACILITY: 0971900 WAUKEGAN

SAMPLES SCHEDULED DURING: MARCH, 1988

MAIL REPORT TO:

NAME: Howard Peskator, Director — DATE COLLECTED 3/1/88

ADDR: 106 N. Utica St — TIME COLLECTED 9:00A

CITY: WAUKEGAN STATE ILL ZIP 60085 — SMPL COLLECTOR Ken Sheets

PHONE NUMBER 312-360-9000 ext 4

FUNDING CODE: PW30
AGNCY ROUTING:
SAMPLE TYPE: RPWS - RAW
PURPOSE: 1 - ROUTINE
RPT INDICATOR: B
SUBMIT SRCE: 09719000121001
SMPL PROGRAM: CH - CHEMICAL
PARM GROUP: PWMAB

SAMPLE TYPE: RAW

WAUKEGAN

SAMPLE LOCATION: RAW SURFACE # 21001
LK MICHIGAN INTAKE

INLET DEPTH (FT): 35'

--- LAB USE ONLY ---

SAMPLE NUMBER B802944

DATE RECEIVED MAR 21988

TIME RECEIVED 10A

RECEIVED BY pd

DATE FORWARDED MAY 20'88 SPVSR

532-0761 PWS-31 (REV. 7-86)

ILLINOIS ENVIRONMENTAL PROTECTION AGENCY

SAMPLE NUMBER : 8802944
SAMPLING POINT DESC. : WAUKEGAN

SUBMITTING SOURCE # : 0971900121001 SITE # :
DATE COLLECTED : 880301 TIME COLLECTED : 0900 SAMPLING PROGRAM : CH

COLLECTED BY : KEN SHEETS DELIVERED BY : UPS
COMMENTS :
FUNDING CODE : PW30 AGENCY ROUTING : 00 UNIT CODE :
SAM TYPE CODE : RPWS SAMPLE PURPOSE CODE : 1 REPORTING INDICATOR : B

DATE RECEIVED : 880302 TIME RECEIVED : 1000 RECEIVED BY : PMD
LAB OBSERVATIONS : 3 TRIP BL SAMP :
SUPERVISORS INITIALS : RPF NOTE : K = LESS THAN VALUE

5-24-88 MBC

P00403	PH-LABORATORY	UNITS	3.0	P00095	CONDUCTIVITY	UM/CM	290
P70300	(ROE) TDS @ 180C	MG/L	154	P00410	ALKALINITY,TOTAL	MG/L	119
P00900	HARDNESS,EDTATOTAL	MG/L	128.5	P00951	FLUORIDE,TOTAL	MG/L	0.1K
P00940	CHLORIDE,TOTAL	MG/L	11	P00945	SULFATE,TOTAL	MG/L	24
P00630	NITRATE&NO2-NTOTAL	MG/L	0.28	P00610	AMMONIA-N,TOTAL	MG/L	0.1K
P00956	SILICA,TOTAL	MG/L	1.0K	P00720	CYANIDE,TOTAL	MG/L	0.005K
P01002	ARSENIC,TOTAL	UG/L	1K	P01051	LEAD,TOT.FURNACE	UG/L	5K
P71900	MERCURY,TOTAL	UG/L	0.05K	P01147	SELENIUM,TOTAL	UG/L	1K
P00916	CALCIUM,TOTAL	MG/L	37	P00927	MAGNESIUM,TOTAL	MG/L	11
P00929	SODIUM,TOTAL	MG/L	6.3	P00937	POTASSIUM,TOTAL	MG/L	0.90
1105	ALUMINUM,TOTAL	UG/L	115	P01007	BARIUM,TOTAL	UG/L	22
P01022	BORON,TOTAL	UG/L	50K	P01012	BERYLLIUM,TOTAL	UG/L	0.5K
P01027	CADMIUM,TOTAL	UG/L	3K	P01034	CHROMIUM,TOTAL	UG/L	5K
P01042	COPPER,TOTAL	UG/L	5K	P01037	COBALT,TOTAL	UG/L	5K
P01045	IRON,TOTAL	UG/L	165	P01055	MANGANESE,TOTAL	UG/L	9
P01067	NICKEL,TOTAL	UG/L	5K	P01077	SILVER,TOTAL	UG/L	3K
P01082	STRONTIUM,TOTAL	UG/L	129	P01087	VANADIUM,TOTAL	UG/L	5K
P01092	ZINC,TOTAL	UG/L	50K	P82394	HARDNESS CALC.	MG/L	139C
I17700	ANION/CATION BAL	Y/N	Y				

Illinois Environmental Protection Agency • 2200 Churchill Road, Springfield, IL 62706

DIVISION OF PUBLIC WATER SUPPLIES

CHEMICAL ANALYSI

FACILITY: 0971900 WAUKEGAN

SAMPLES SCHEDULED DURING: MARCH, 1990

MAIL REPORT TO:

NAME: Frank Chess, Acting Director

ADDR: 106 N. Utica St

CITY: Waukegan STATE ILL ZIP 60085

DATE COLLECTED March 22, 1990

TIME COLLECTED 8:35A

SMPL COLLECTOR Ken Sheets

PHONE NUMBER 708-360-9000, ext

FUNDING CODE: PW30
AGNCY ROUTING:
SAMPLE TYPE: RPWS - RAW
PURPOSE: 1 - ROUTINE
RPT INDICATOR: B
SUBMIT SRCE: 09719000121001
SMPL PROGRAM: CH - CHEMICAL
PARM GROUP: PWMAB

SAMPLE TYPE: RAW

WAUKEGAN

SAMPLE LOCATION: RAW SURFACE # 21001
LK MICHIGAN INTAKE

INLET DEPTH (FT): 35'

PUBLIC WATER SUPPLIES
MAY 7 '90

--- LAB USE ONLY ---

SAMPLE NUMBER B004255

DATE RECEIVED MAR 23 1990

TIME RECEVIED

RECEIVED BY

DATE FORWARDED MAY 0 4 1990 SPVSR

IL 532-0761 PWS-31(REV.7-86)

ILLINOIS ENVIRONMENTAL PROTECTION AGENCY

SAMPLE NUMBER : B004255
SAMPLING POINT DESC. : WAUKEGAN LK MICHIGAN INTAKE

SUBMITTING SOURCE # : 09719C00121001 SITE # :
DATE COLLECTED : 900322 TIME COLLECTED : 0835 SAMPLING PROGRAM : CH

COLLECTED BY : K SHEETS DELIVERED BY : UPS
COMMENTS :
FUNDING CODE : PW30 AGENCY ROUTING : OC UNIT CODE :
SAM TYPE CODE : RPWS SAMPLE PURPOSE CODE : 1 REPORTING INDICATOR : B

DATE RECEIVED : 900323 TIME RECEIVED : 1100 RECEIVED BY : MAD
LAB OBSERVATIONS : TRIP BL SAM# :
SUPERVISORS INITIALS : RPF NOTE : K = LESS THAN VALUE

P00403	PH-LABORATORY	UNITS	8.2	P00095	CONDUCTIVITY	UM/CM	300
P70300	(ROE) TDS @ 180C	MG/L	178	P00410	ALKALINITY,TOTAL	MG/L	112
P00900	HARDNESS,EDTATOTAL	MG/L	136	P00951	FLUORIDE,TOTAL	MG/L	.1K
P00940	CHLORIDE,TOTAL	MG/L	12	P00945	SULFATE,TOTAL	MG/L	24
P00630	NITRATE&NO2-NTOTAL	MG/L	0.33	P00610	AMMONIA-N,TOTAL	MG/L	0.1K
P00956	SILICA,TOTAL	MG/L	1K	P00720	CYANIDE,TOTAL	MG/L	0.005K
P01002	ARSENIC,TOTAL	UG/L	1K	P01051	LEAD,TOT.FURNACE	UG/L	5K
P71900	MERCURY,TOTAL	UG/L	0.05K	P01147	SELENIUM,TOTAL	UG/L	1K
P00916	CALCIUM,TOTAL	MG/L	38	P00927	MAGNESIUM,TOTAL	MG/L	11
P00929	SODIUM,TOTAL	MG/L	6.8	P00937	POTASSIUM,TOTAL	MG/L	2.4
P01105	ALUMINUM,TOTAL	UG/L	216	P01007	BARIUM,TOTAL	UG/L	20
P01022	BORON,TOTAL	UG/L	50K	P01012	BERYLLIUM,TOTAL	UG/L	0.5K
P01027	CADMIUM,TOTAL	UG/L	3K	P01034	CHROMIUM,TOTAL	UG/L	5K
P01042	COPPER,TOTAL	UG/L	5K	P01037	COBALT,TOTAL	UG/L	5K
P01045	IRON,TOTAL	UG/L	50K	P01055	MANGANESE,TOTAL	UG/L	40
P01067	NICKEL,TOTAL	UG/L	8	P01077	SILVER,TOTAL	UG/L	3K
P01082	STRONTIUM,TOTAL	UG/L	128	P01087	VANADIUM,TOTAL	UG/L	5K
P01092	ZINC,TOTAL	UG/L	50K	P82394	HARDNESS CALC.	MG/L	142C
I17700	ANION/CATION BAL	Y/N	Y				

Illinois Environmental Protection Agency • 2200 Churchill Road, Springfield, IL 62706

DIVISION OF PUBLIC WATER SUPPLIES — CHEMICAL ANALYSIS

FACILITY: 0971900 WAUKEGAN

SAMPLES SCHEDULED DURING: MARCH, 1992

MAIL REPORT TO:

NAME: Frank Chess, Jr Supt — DATE COLLECTED: March 19, 1992

ADDR: 106 N Utica St — TIME COLLECTED: 9.40A

CITY: Waukegan STATE: IL ZIP: 60085 — SMPL. COLLECTOR: Ken Sheets

PHONE NUMBER: 708-360-9000-451

FUNDING CODE: PW30
AGNCY ROUTING:
SAMPLE TYPE: RPWS - RAW
PURPOSE: 1 - ROUTINE
RPT INDICATOR: B
SUBMIT SRCE: 09719000121001
SMPL PROGRAM: CH - CHEMICAL
PARM GROUP: PWMAB

SAMPLE TYPE: RAW

WAUKEGAN

SAMPLE LOCATION: RAW SURFACE # 21001
LK MICHIGAN INTAKE

INLET DEPTH (FT): 35 ft

RECEIVED
JUL 09 1992
Environmental Protection Agency
State of Illinois

--- LAB USE ONLY ---
SAMPLE NUMBER: B20361 0
DATE RECEIVED: MAR 20 1992
TIME RECEIVED: 10A
RECEIVED BY: pd
DATE FORWARDED: JUL 08 1992 SPWSP

IL 532-0781 PWS-31 (REV. 7-86)

ILLINOIS ENVIRONMENTAL PROTECTION AGENCY

SAMPLE NUMBER : B203810
SAMPLING POINT DESC. : WAUKEGAN

SUBMITTING SOURCE # : 0971900012100l SITE # :
DATE COLLECTED : 920319 TIME COLLECTED : 0940 SAMPLING PROGRAM : CH

COLLECTED BY : KEN SHEETS DELIVERED BY : UPS
COMMENTS :
FUNDING CODE : PW30 AGENCY ROUTING : 00 UNIT CODE :
SAM TYPE CODE : RPWS SAMPLE PURPOSE CODE : 1 REPORTING INDICATOR : B

DATE RECEIVED : 920320 TIME RECEIVED : 1000 RECEIVED BY : PMD
LAB OBSERVATIONS : TRIP BL SAM#:
SUPERVISORS INITIALS : RPF NOTE : K = LESS THAN VALUE

MBC 7-13-92

P00403	PH-LABORATORY	UNITS	8.1	P00095	CONDUCTIVITY	UM/CM	283
P70300	(ROE) TDS @ 180C	MG/L	169	P00410	ALKALINITY,TOTAL	MG/L	108
P00900	HARDNESS,EDTATOTAL	MG/L	127	P00951	FLUORIDE,TOTAL	MG/L	0.14
P00940	CHLORIDE,TOTAL	MG/L	9.3	P00945	SULFATE,TOTAL	MG/L	22
P00630	NITRATE&NO2-NTOTAL	MG/L	0.30	P00610	AMMONIA-N,TOTAL	MG/L	0.05
P00956	SILICA,TOTAL	MG/L	1.0K	P00720	CYANIDE,TOTAL	MG/L	0.01K
P01002	ARSENIC,TOTAL	UG/L	1K	P01051	LEAD,TOT.FURNACE	UG/L	5K
P71900	MERCURY,TOTAL	UG/L	0.05K	P01147	SELENIUM,TOTAL	UG/L	1K
P00916	CALCIUM,TOTAL	MG/L	39.9	P00927	MAGNESIUM,TOTAL	MG/L	13.2
0929	SODIUM,TOTAL	MG/L	5.8	P00937	POTASSIUM,TOTAL	MG/L	1.0K
0105	ALUMINUM,TOTAL	UG/L	459	P01007	BARIUM,TOTAL	UG/L	14
P01022	BORON,TOTAL	UG/L	22	P01012	BERYLLIUM,TOTAL	UG/L	1K
P01027	CADMIUM,TOTAL	UG/L	5K	P01034	CHROMIUM,TOTAL	UG/L	5K
P01042	COPPER,TOTAL	UG/L	10K	P01037	COBALT,TOTAL	UG/L	5K
P01045	IRON,TOTAL	UG/L	835	P01055	MANGANESE,TOTAL	UG/L	194
P01067	NICKEL,TOTAL	UG/L	15K	P01077	SILVER,TOTAL	UG/L	5K
P01082	STRONTIUM,TOTAL	UG/L	123	P01087	VANADIUM,TOTAL	UG/L	5K
P01092	ZINC,TOTAL	UG/L	50K	P82394	HARDNESS CALC.	MG/L	153C
I17700	ANION/CATION BAL	Y/N	Y				

Illinois Environmental Protection Agency • 2200 Churchill Road, Springfield, IL 62706

DIVISION OF PUBLIC WATER SUPPLIES — CHEMICAL ANALYSIS

FACILITY: 0971900 Waukegan

SAMPLES SCHEDULED DURING: March, 1992

MAIL REPORT TO:

NAME: Frank Chesi

ADDR: 106 N Utica

CITY: Waukegan STATE: IL ZIP: 60085

DATE COLLECTED: 3/19/92

TIME COLLECTED:

SAMPLE COLLECTOR: Ken Sheets

PHONE NUMBER: (708) 360-9026 Ext. 42

FUNDING CODE: PW30
AGENCY ROUTING:
SAMPLE TYPE: PW30 - Dist
PURPOSE: 1 -
RPT INDICATOR: B
SUBMIT SRCE: 0971900
SMPL PROGRAM: CH - CHEMICAL
PARM GROUP: PWMAB

SAMPLE TYPE: Distribution

FACILITY:

SAMPLE LOCATION: 7-11 Store

IF RAW, INLET DEPTH (FT):

FROM:

TO: IL EPA--LABORATORY SERVICES
2125 SOUTH FIRST STREET
CHAMPAIGN, IL 61820

FROM: IL EPA--LABORATORY SERVICES
2125 SOUTH FIRST STREET
CHAMPAIGN, IL 61820

TO:

RECEIVED
JUL 09 1992
Environmental Protection Agency
State of Illinois

--- LAB USE ONLY ---

SAMPLE NUMBER P203809

DATE RECEIVED MAR 20 1992

TIME RECEIVED 10A

RECEIVED BY pd

DATE FORWARDED JUL 06 1992 SPVSR

IL 532-0761 PWS-31 (REV. 7-86)

ILLINOIS ENVIRONMENTAL PROTECTION AGENCY

SAMPLE NUMBER : B203809
SAMPLING POINT DESC. : WAUKEGAN

SUBMITTING SOURCE # : 0971900 SITE # :
DATE COLLECTED : 920319 TIME COLLECTED : 1100 SAMPLING PROGRAM : CH

COLLECTED BY : KEN SHEETS DELIVERED BY : UPS
COMMENTS :
FUNDING CODE : PW32 AGENCY ROUTING : 00 UNIT CODE :
SAM TYPE CODE : DPWS SAMPLE PURPOSE CODE : 1 REPORTING INDICATOR : B

DATE RECEIVED : 920320 TIME RECEIVED : 1000 RECEIVED BY : PMD
LAB OBSERVATIONS : TRIP BL SAM# :
SUPERVISORS INITIALS : RPF NOTE : K = LESS THAN VALUE

P00403	PH-LABORATORY	UNITS : 7.8	P00095	CONDUCTIVITY	UM/CM : 300
P70300	(ROE) TDS @ 180C	MG/L : 167	P00410	ALKALINITY,TOTAL	MG/L : 113
P00900	HARDNESS,EDTATOTAL	MG/L : 133	P00951	FLUORIDE,TOTAL	MG/L : 0.52
P00940	CHLORIDE,TOTAL	MG/L : 13	P00945	SULFATE,TOTAL	MG/L : 27
P00630	NITRATE&NO2-NTOTAL	MG/L : 0.30	P00610	AMMONIA-N,TOTAL	MG/L : 0.18
P00956	SILICA,TOTAL	MG/L : 1.0K	P00720	CYANIDE,TOTAL	MG/L : 0.01K
P01002	ARSENIC,TOTAL	UG/L : 1K	P01051	LEAD,TOT FURNACE	UG/L : 5K
P71900	MERCURY,TOTAL	UG/L : 0.05K	P01147	SELENIUM,TOTAL	UG/L : 1K
P00916	CALCIUM,TOTAL	MG/L : 36.8	P00927	MAGNESIUM,TOTAL	MG/L : 11.5
P00929	SODIUM,TOTAL	MG/L : 7.0	P00937	POTASSIUM,TOTAL	MG/L : 1.2
P01105	ALUMINUM,TOTAL	UG/L : 150K	P01C07	BARIUM,TOTAL	UG/L : 11
P01022	BORON,TOTAL	UG/L : 23	P01012	BERYLLIUM,TOTAL	UG/L : 1K
P01C27	CADMIUM,TOTAL	UG/L : 5K	P01034	CHROMIUM,TOTAL	UG/L : 5K
P01042	COPPER,TOTAL	UG/L : 50	P01037	COBALT,TOTAL	UG/L : 5K
P01045	IRON,TOTAL	UG/L : 60K	P01055	MANGANESE,TOTAL	UG/L : 20
P01067	NICKEL,TOTAL	UG/L : 15K	P01077	SILVER,TOTAL	UG/L : 5K
P01082	STRONTIUM,TOTAL	UG/L : 127	P01087	VANADIUM,TOTAL	UG/L : 5K
P01092	ZINC,TOTAL	UG/L : 50K	P82394	HARDNESS CALC.	MG/L : 139C
I17700	ANION/CATION BAL	Y/N : Y			