P&PE-80-490

Madison Co

Wood River/Shell

SHELL OIL COMPANY

P. O. BOX 262
WOOD RIVER, ILLINOIS 62095

November 13, 1980

CERTIFIED MAIL - RETURN RECEIPT REQUESTED

EPA Region V
RCRA Activities
P. O. Box 7861
Chicago, IL 60680

Gentlemen:

Pursuant to the requirements of the Resource Conservation and Recovery Act, enclosed is our Part A application. Any questions should be directed to Mr. C. G. Walls.

Very truly yours,

A. R. Williams
Refinery Manager

JGE:rmr

bc: Manager's File
Messrs. R. St. Pierre/W. Saunders
J. S. Szymanowski
G. A. Miller
H. L. Dawson
W. A. Dick
W. E. Carr
C. R. Woodford
H. G. Rollins
W. J. Deubner/J. J. Rinehart
C. J. Walls/J. D. Evans/J. D. Rankin
J. R. Hanahan/W. G. Cline/J. I. Celis/J. G. Edwards
Quality Control File (WRR-41) 483 (W/Attachment) #264
P&PE File 280-5 (W/Attachment)
P&PE Permit File 600-1 (W/Attachment)
Main Office File (W/Attachment)

Enclosure

EPA Region 5 Records Ctr.
379823

Please print or type in the unshaded areas only (fill-in areas are spaced for elite type, i.e., 12 characters per inch). Shell Oil Co.-WRR-1/14

Form Approved OMB No. 158-R0175

FORM 1 GENERAL

EPA

U.S. ENVIRONMENTAL PROTECTION AGENCY

GENERAL INFORMATION

Consolidated Permits Program

(Read the "General Instructions" before starting.)

I. EPA I.D. NUMBER: F I L D 0 8 0 0 1 2 3 0 5 D

I. EPA I.D. NUMBER

III. FACILITY NAME

V. FACILITY MAILING ADDRESS

VI. FACILITY LOCATION

PLEASE PLACE LABEL IN THIS SPACE

GENERAL INSTRUCTIONS

If a preprinted label has been provided, affix it in the designated space. Review the information carefully; if any of it is incorrect, cross through it and enter the correct data in the appropriate fill-in area below. Also, if any of the preprinted data is absent *(the area to the left of the label space lists the information that should appear)*, please provide it in the proper fill-in area(s) below. If the label is complete and correct, you need not complete Items II, III, V, and VI *(except VI-B which must be completed regardless)*. Complete all items if no label has been provided. Refer to the instructions for detailed item descriptions and for the legal authorizations under which this data is collected.

II. POLLUTANT CHARACTERISTICS

INSTRUCTIONS: Complete A through J to determine whether you need to submit any permit application forms to the EPA. If you answer "yes" to any questions, you must submit this form and the supplemental form listed in the parenthesis following the question. Mark "X" in the box in the third column if the supplemental form is attached. If you answer "no" to each question, you need not submit any of these forms. You may answer "no" if your activity is excluded from permit requirements; see Section C of the instructions. See also, Section D of the instructions for definitions of bold-faced terms.

SPECIFIC QUESTIONS	MARK 'X' YES	NO	FORM ATTACHED	SPECIFIC QUESTIONS	MARK 'X' YES	NO	FORM ATTACHED
A. Is this facility a publicly owned treatment works which results in a discharge to waters of the U.S.? (FORM 2A)		X		B. Does or will this facility *(either existing or proposed)* include a concentrated animal feeding operation or aquatic animal production facility which results in a discharge to waters of the U.S.? (FORM 2B)		X	
C. Is this a facility which currently results in discharges to waters of the U.S. other than those described in A or B above? (FORM 2C)	X			D. Is this a proposed facility *(other than those described in A or B above)* which will result in a discharge to waters of the U.S.? (FORM 2D)		X	
E. Does or will this facility treat, store, or dispose of hazardous wastes? (FORM 3)	X		3	F. Do you or will you inject at this facility industrial or municipal effluent below the lowermost stratum containing, within one quarter mile of the well bore, underground sources of drinking water? (FORM 4)		X	
G. Do you or will you inject at this facility any produced water or other fluids which are brought to the surface in connection with conventional oil or natural gas production, inject fluids used for enhanced recovery of oil or natural gas, or inject fluids for storage of liquid hydrocarbons? (FORM 4)		X		H. Do you or will you inject at this facility fluids for special processes such as mining of sulfur by the Frasch process, solution mining of minerals, in situ combustion of fossil fuel, or recovery of geothermal energy? (FORM 4)		X	
I. Is this facility a proposed stationary source which is one of the 28 industrial categories listed in the instructions and which will potentially emit 100 tons per year of any air pollutant regulated under the Clean Air Act and may affect or be located in an attainment area? (FORM 5)		X		J. Is this facility a proposed stationary source which is NOT one of the 28 industrial categories listed in the instructions and which will potentially emit 250 tons per year of any air pollutant regulated under the Clean Air Act and may affect or be located in an attainment area? (FORM 5)		X	

III. NAME OF FACILITY

1 SKIP SHELL OIL COMPANY WOOD RIVER REFINERY

IV. FACILITY CONTACT

A. NAME & TITLE *(last, first, & title)*: 2 WALLS C. G. MGR ENV. CONSERV.

B. PHONE *(area code & no.)*: 618 254 7371

V. FACILITY MAILING ADDRESS

A. STREET OR P.O. BOX: 3 P. O. BOX 262

B. CITY OR TOWN: 4 WOOD RIVER

C. STATE: IL

D. ZIP CODE: 62095

VI. FACILITY LOCATION

A. STREET, ROUTE NO. OR OTHER SPECIFIC IDENTIFIER: 5 S.A-11A AND ROUTE 111

B. COUNTY NAME: MADISON

C. CITY OR TOWN: 6 ROXANA

D. STATE: IL

E. ZIP CODE: 62084

F. COUNTY CODE *(if known)*:

CONTINUED FROM THE FRONT

VII. SIC CODES (4-digit, in order of priority)

A. FIRST	B. SECOND
2911 (specify) CRUDE OIL REFINERY	2869 (specify) Industrial Organic Chemicals NEC
C. THIRD	**D. FOURTH**
(specify)	(specify)

VIII. OPERATOR INFORMATION

A. NAME: SHELL OIL COMPANY

B. Is the name listed in Item VIII-A also the owner? [X] YES [ ] NO

C. STATUS OF OPERATOR (Enter the appropriate letter into the answer box; if "Other", specify.)
F = FEDERAL
S = STATE
P = PRIVATE
M = PUBLIC (other than federal or state)
O = OTHER (specify)
Answer: P (specify)

D. PHONE (area code & no.): A 618 254 7371

E. STREET OR P.O. BOX: P.O. BOX 262

F. CITY OR TOWN: WOOD RIVER

G. STATE: IL

H. ZIP CODE: 62095

IX. INDIAN LAND
Is the facility located on Indian lands? [ ] YES [X] NO

X. EXISTING ENVIRONMENTAL PERMITS

A. NPDES (Discharges to Surface Water): N ILO000205	D. PSD (Air Emissions from Proposed Sources): P
B. UIC (Underground Injection of Fluids): U	E. OTHER (specify): 1979-EO-4328 (specify) IL DIVISION OF WATER POLLUTION CONTROL CH. 3 PERMIT
C. RCRA (Hazardous Wastes): R LD008001230 5	E. OTHER (specify): (specify)

XI. MAP

Attach to this application a topographic map of the area extending to at least one mile beyond property bounderies. The map must show the outline of the facility, the location of each of its existing and proposed intake and discharge structures, each of its hazardous waste treatment, storage, or disposal facilities, and each well where it injects fluids underground. Include all springs, rivers and other surface water bodies in the map area. See instructions for precise requirements.

XII. NATURE OF BUSINESS (provide a brief description)

PETROLEUM REFINING AND INDUSTRIAL ORGANIC CHEMICALS

XIII. CERTIFICATION (see instructions)

I certify under penalty of law that I have personally examined and am familiar with the information submitted in this application and all attachments and that, based on my inquiry of those persons immediately responsible for obtaining the information contained in the application, I believe that the information is true, accurate and complete. I am aware that there are significant penalties for submitting false information, including the possibility of fine and imprisonment.

A. NAME & OFFICIAL TITLE (type or print)	B. SIGNATURE	C. DATE SIGNED
R. J. O'BRIEN VICE PRESIDENT -- OPERATIONS	RJO'Brien	11/7/80

COMMENTS FOR OFFICIAL USE ONLY

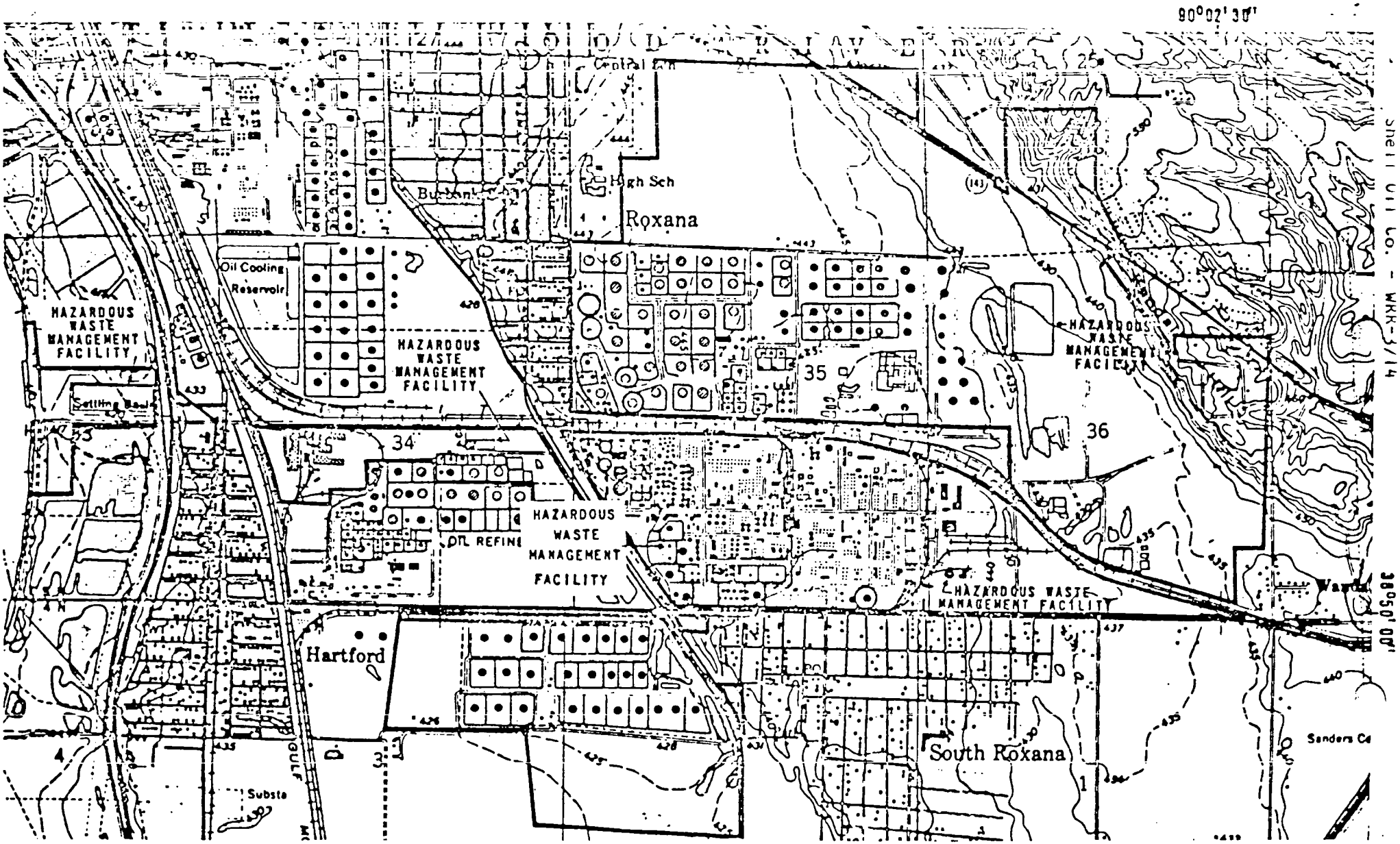

COPIED FROM USGS WOOD RIVER, ILLINOIS, QUADRANGLE

MN
GN
1°50'
33 MILS
4°
71 MILS

UTM GRID AND 1974 MAGNETIC NORTH DECLINATION AT CENTER OF SHEET

SCALE 1: 24,000

REFINERY PROPERTY ———

TOPOGRAPHIC MAP
SHELL OIL COMPANY
WOOD RIVER REFINERY

Shell Oil Co. - WRR-3/14

Please print or type in the unshaded areas only
(Fill-in areas are spaced for elite type, i.e., 12 characters per inch). Shell Oil Co.-WRR-4/14 Form Approved OMB No. 158-S80004

FORM 3 RCRA

U.S. ENVIRONMENTAL PROTECTION AGENCY

HAZARDOUS WASTE PERMIT APPLICATION

Consolidated Permits Program

(This information is required under Section 3005 of RCRA.)

I. EPA I.D. NUMBER: F I L D 0 8 0 0 1 2 3 0 5 1

FOR OFFICIAL USE ONLY

APPLICATION APPROVED	DATE RECEIVED (yr., mo., & day)	COMMENTS

II. FIRST OR REVISED APPLICATION

Place an "X" in the appropriate box in A or B below *(mark one box only)* to indicate whether this is the first application you are submitting for your facility or a revised application. If this is your first application and you already know your facility's EPA I.D. Number, or if this is a revised application, enter your facility's EPA I.D. Number in Item I above.

A. FIRST APPLICATION *(place an "X" below and provide the appropriate date)*

[X] 1. EXISTING FACILITY *(See instructions for definition of "existing" facility. Complete item below.)*

FOR EXISTING FACILITIES, PROVIDE THE DATE (yr., mo., & day) OPERATION BEGAN OR THE DATE CONSTRUCTION COMMENCED *(use the boxes to the left)*

C 8 | YR. 1 8 | MO. | DAY

[ ] 2. NEW FACILITY *(Complete item below.)*

FOR NEW FACILITIES, PROVIDE THE DATE (yr., mo., & day) OPERATION BEGAN OR IS EXPECTED TO BEGIN

YR. | MO. | DAY

B. REVISED APPLICATION *(place an "X" below and complete Item I above)*

[ ] 1. FACILITY HAS INTERIM STATUS

[ ] 2. FACILITY HAS A RCRA PERMIT

III. PROCESSES – CODES AND DESIGN CAPACITIES

A. PROCESS CODE – Enter the code from the list of process codes below that best describes each process to be used at the facility. Ten lines are provided for entering codes. If more lines are needed, enter the code(s) in the space provided. If a process will be used that is not included in the list of codes below, then describe the process *(including its design capacity)* in the space provided on the form *(Item III-C)*.

B. PROCESS DESIGN CAPACITY – For each code entered in column A enter the capacity of the process.
1. AMOUNT – Enter the amount.
2. UNIT OF MEASURE – For each amount entered in column B(1), enter the code from the list of unit measure codes below that describes the unit of measure used. Only the units of measure that are listed below should be used.

PROCESS	PROCESS CODE	APPROPRIATE UNITS OF MEASURE FOR PROCESS DESIGN CAPACITY
Storage:		
CONTAINER (barrel, drum, etc.)	S01	GALLONS OR LITERS
TANK	S02	GALLONS OR LITERS
WASTE PILE	S03	CUBIC YARDS OR CUBIC METERS
SURFACE IMPOUNDMENT	S04	GALLONS OR LITERS
Disposal:		
INJECTION WELL	D79	GALLONS OR LITERS
LANDFILL	D80	ACRE-FEET *(the volume that would cover one acre to a depth of one foot)* OR HECTARE-METER
LAND APPLICATION	D81	ACRES OR HECTARES
OCEAN DISPOSAL	D82	GALLONS PER DAY OR LITERS PER DAY
SURFACE IMPOUNDMENT	D83	GALLONS OR LITERS

PROCESS	PROCESS CODE	APPROPRIATE UNITS OF MEASURE FOR PROCESS DESIGN CAPACITY
Treatment:		
TANK	T01	GALLONS PER DAY OR LITERS PER DAY
SURFACE IMPOUNDMENT	T02	GALLONS PER DAY OR LITERS PER DAY
INCINERATOR	T03	TONS PER HOUR OR METRIC TONS PER HOUR; GALLONS PER HOUR OR LITERS PER HOUR
OTHER *(Use for physical, chemical, thermal or biological treatment processes not occurring in tanks, surface impoundments or incinerators. Describe the processes in the space provided; Item III-C.)*	T04	GALLONS PER DAY OR LITERS PER DAY

UNIT OF MEASURE	UNIT OF MEASURE CODE	UNIT OF MEASURE	UNIT OF MEASURE CODE	UNIT OF MEASURE	UNIT OF MEASURE CODE
GALLONS	G	LITERS PER DAY	V	ACRE-FEET	A
LITERS	L	TONS PER HOUR	D	HECTARE-METER	F
CUBIC YARDS	Y	METRIC TONS PER HOUR	W	ACRES	B
CUBIC METERS	C	GALLONS PER HOUR	E	HECTARES	Q
GALLONS PER DAY	U	LITERS PER HOUR	H		

EXAMPLE FOR COMPLETING ITEM III *(shown in line numbers X-1 and X-2 below)*: A facility has two storage tanks, one tank can hold 200 gallons and the other can hold 400 gallons. The facility also has an incinerator that can burn up to 20 gallons per hour.

C DUP T/A C 1

LINE NUMBER	A. PROCESS CODE (from list above)	B. PROCESS DESIGN CAPACITY 1. AMOUNT (specify)	B. PROCESS DESIGN CAPACITY 2. UNIT OF MEASURE (enter code)	FOR OFFICIAL USE ONLY	LINE NUMBER	A. PROCESS CODE (from list above)	B. PROCESS DESIGN CAPACITY 1. AMOUNT	B. PROCESS DESIGN CAPACITY 2. UNIT OF MEASURE (enter code)	FOR OFFICIAL USE ONLY
X-1	S 0 2	600	G		5				
X-2	T 0 3	20	E		6				
1	S 0 1	5,000	G		7				
2	D 8 3	40,000,000	G		8				
3	S 0 4	19,000,000	G		9				
4	S 0 2	600,000	G		10				

CONTINUE ON REVERSE

III. PROCESSES *(continued)*

C. SPACE FOR ADDITIONAL PROCESS CODES OR FOR DESCRIBING OTHER PROCESSES *(code "T04")*. FOR EACH PROCESS ENTERED HERE INCLUDE DESIGN CAPACITY.

IV. DESCRIPTION OF HAZARDOUS WASTES

A. EPA HAZARDOUS WASTE NUMBER – Enter the four–digit number from 40 CFR, Subpart D for each listed hazardous waste you will handle. If you handle hazardous wastes which are not listed in 40 CFR, Subpart D, enter the four–digit number*(s)* from 40 CFR, Subpart C that describes the characteristics and/or the toxic contaminants of those hazardous wastes.

B. ESTIMATED ANNUAL QUANTITY – For each listed waste entered in column A estimate the quantity of that waste that will be handled on an annual basis. For each characteristic or toxic contaminant entered in column A estimate the total annual quantity of all the non–listed waste*(s)* that will be handled which possess that characteristic or contaminant.

C. UNIT OF MEASURE -- For each quantity entered in column B enter the unit of measure code. Units of measure which must be used and the appropriate codes are:

ENGLISH UNIT OF MEASURE	CODE	METRIC UNIT OF MEASURE	CODE
POUNDS	P	KILOGRAMS	K
TONS	T	METRIC TONS	M

If facility records use any other unit of measure for quantity, the units of measure must be converted into one of the required units of measure taking into account the appropriate density or specific gravity of the waste.

D. PROCESSES

1. PROCESS CODES:
   For listed hazardous waste: For each listed hazardous waste entered in column A select the code*(s)* from the list of process codes contained in Item III to indicate how the waste will be stored, treated, and/or disposed of at the facility.
   For non–listed hazardous wastes: For each characteristic or toxic contaminant entered in column A, select the code*(s)* from the list of process codes contained in Item III to indicate all the processes that will be used to store, treat, and/or dispose of all the non–listed hazardous wastes that possess that characteristic or toxic contaminant.
   Note: Four spaces are provided for entering process codes. If more are needed: (1) Enter the first three as described above; (2) Enter "000" in the extreme right box of Item IV-D(1); and (3) Enter in the space provided on page 4, the line number and the additional code*(s)*.

2. PROCESS DESCRIPTION: If a code is not listed for a process that will be used, describe the process in the space provided on the form.

NOTE: HAZARDOUS WASTES DESCRIBED BY MORE THAN ONE EPA HAZARDOUS WASTE NUMBER -- Hazardous wastes that can be described by more than one EPA Hazardous Waste Number shall be described on the form as follows:

1. Select one of the EPA Hazardous Waste Numbers and enter it in column A. On the same line complete columns B,C, and D by estimating the total annual quantity of the waste and describing all the processes to be used to treat, store, and/or dispose of the waste.
2. In column A of the next line enter the other EPA Hazardous Waste Number that can be used to describe the waste. In column D(2) on that line enter "included with above" and make no other entries on that line.
3. Repeat step 2 for each other EPA Hazardous Waste Number that can be used to describe the hazardous waste.

EXAMPLE FOR COMPLETING ITEM IV *(shown in line numbers X-1, X-2, X-3, and X-4 below)* – A facility will treat and dispose of an estimated 900 pounds per year of chrome shavings from leather tanning and finishing operation. In addition, the facility will treat and dispose of three non–listed wastes. Two wastes are corrosive only and there will be an estimated 200 pounds per year of each waste. The other waste is corrosive and ignitable and there will be an estimated 100 pounds per year of that waste. Treatment will be in an incinerator and disposal will be in a landfill.

LINE NO.	A. EPA HAZARD. WASTE NO. *(enter code)*	B. ESTIMATED ANNUAL QUANTITY OF WASTE	C. UNIT OF MEASURE *(enter code)*	D. PROCESSES 1. PROCESS CODES *(enter)*	D. PROCESSES 2. PROCESS DESCRIPTION *(if a code is not entered in D(1))*
X-1	K 0 5 4	900	P	T 0 3 D 8 0	
X-2	D 0 0 2	400	P	T 0 3 D 8 0	
X-3	D 0 0 1	100	P	T 0 3 D 8 0	
X-4	D 0 0 2				*included with above*

CONTINUE ON PAGE 3

Continued from page 2.

Shell Oil Co.-WRR-6/14

NOTE: Photocopy this page before completing if you have more than 26 wastes to list.

Form Approved OMB No 158-S80004

EPA I.D. NUMBER (enter from page 1)		FOR OFFICIAL USE ONLY		
W I L D 0 8 0 0 1 2 3 0 5	1	W	DUP	2 DUP

IV. DESCRIPTION OF HAZARDOUS WASTES (continued)

LINE NO.	A. EPA HAZARD. WASTE NO. (enter code)	B. ESTIMATED ANNUAL QUANTITY OF WASTE	C. UNIT OF MEASURE (enter code)	D. PROCESSES 1. PROCESS CODES (enter)	D. PROCESSES 2. PROCESS DESCRIPTION (If a code is not entered in D(1))
1	K048	2,000	T	D83	
2	K049	3,000	T	D83	
3	K051	10,000	T	D83	
4	K052	5	T	S01	
5	U188	5	T	S01	
6	K050	5	T	S01	
7	F001	1	T	S01	
8	F003	1	T	S01	
9	U019	1	T	S01	
10	U013	50	T	S01	
11	D003	10	T	S01	
12	D003	900	T	S04	
13	D002	7,000	T	S02	
14					
15					
16					
17					
18					
19					
20					
21					
22					
23					
24					
25					
26					

EPA Form 3510-3 (6-80)

CONTINUE ON REVERSE

(enter "A", "B", "C", etc. behind the "3" to identify photocopied pages)

IV. DESCRIPTION OF HAZARDOUS WASTES (continued)

E. USE THIS SPACE TO LIST ADDITIONAL PROCESS CODES FROM ITEM D(1) ON PAGE 3.

EPA I.D. NO. (enter from page 1)

I L D 0 8 0 0 1 2 3 0 5 0

V. FACILITY DRAWING

All existing facilities must include in the space provided on page 5 a scale drawing of the facility (see instructions for more detail).

VI. PHOTOGRAPHS

All existing facilities must include photographs (aerial or ground-level) that clearly delineate all existing structures; existing storage, treatment and disposal areas; and sites of future storage, treatment or disposal areas (see instructions for more detail).

VII. FACILITY GEOGRAPHIC LOCATION

LATITUDE (degrees, minutes, & seconds)	LONGITUDE (degrees, minutes, & seconds)
38 50 042	090 02 059

VIII. FACILITY OWNER

[X] A. If the facility owner is also the facility operator as listed in Section VIII on Form 1, "General Information", place an "X" in the box to the left and skip to Section IX below.

B. If the facility owner is not the facility operator as listed in Section VIII on Form 1, complete the following items:

1. NAME OF FACILITY'S LEGAL OWNER	2. PHONE NO. (area code & no.)
E	

3. STREET OR P.O. BOX	4. CITY OR TOWN	5. ST.	6. ZIP CODE
F	G		

IX. OWNER CERTIFICATION

I certify under penalty of law that I have personally examined and am familiar with the information submitted in this and all attached documents, and that based on my inquiry of those individuals immediately responsible for obtaining the information, I believe that the submitted information is true, accurate, and complete. I am aware that there are significant penalties for submitting false information, including the possibility of fine and imprisonment. *See attached note below for interpretation.

A. NAME (print or type)	B. SIGNATURE	C. DATE SIGNED
R. J. O'BRIEN VICE PRESIDENT - OPERATIONS	RJO'Brien TRW	11/7/80

X. OPERATOR CERTIFICATION

I certify under penalty of law that I have personally examined and am familiar with the information submitted in this and all attached documents, and that based on my inquiry of those individuals immediately responsible for obtaining the information, I believe that the submitted information is true, accurate, and complete. I am aware that there are significant penalties for submitting false information, including the possibility of fine and imprisonment. *See attached note below for interpretation.

A. NAME (print or type)	B. SIGNATURE	C. DATE SIGNED
R. J. O'BRIEN VICE PRESIDENT - OPERATIONS	RJO'Brien TRW	11/7/80

CONTINUE ON PAGE 5

*This Hazardous Waste Permit Application, including the certification, was prepared based on applicant's good faith interpretations of the Hazardous Waste Management Regulations, 40 CFR 260-265, and the Consolidated Permit Regulations, 40 CFR 122-124. If the interpretations later prove to be erroneous, applicant reserves the right to supplement, amend or otherwise modify the application as necessary.

LEGEND:

—— — — —— - REFINERY PROPERTY

SCALE:

1 IN. = APPROX. 1250 FT.

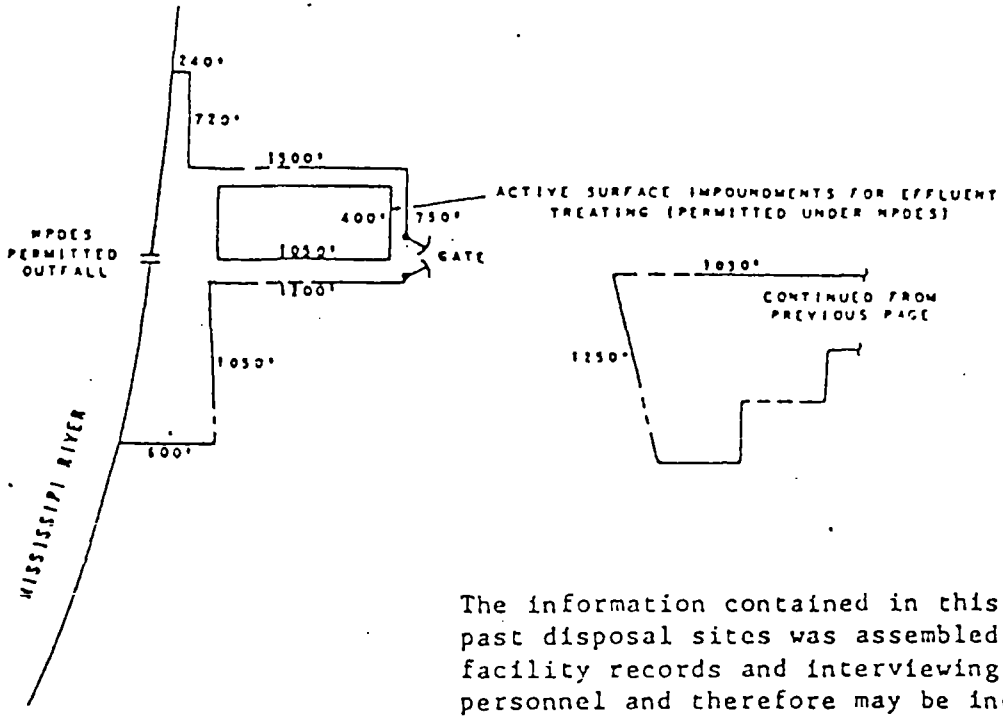

The information contained in this permit application concerning past disposal sites was assembled by searching appropriate facility records and interviewing knowledgeable facility personnel and therefore may be incomplete.

ATTACHMENT IV

32 (RE 5 7)

Shell Oil Company
Interoffice Memorandum

OCTOBER 16, 1981

FROM: MANAGER QUALITY ASSURANCE/ENVIRONMENTAL CONSERVATION

TO: MR. T. R. WILLIAMS - ENVIRONMENTAL CONSERVATION - OPRNS. - HEAD OFFICE

SUBJECT: PIEZOMETER TEST DATA

Attached for your information are the data from the piezometers drilled around our Solid Waste Disposal Basin. Samples for Total Organic Halogen will be shipped to Westhollow Research Center for analysis.

We have also attached data on [illegible] concentration of the solids from our effluent Pond 1, Pond 2, and North and South Polishing Lagoons, and elevation data for the piezometers.

Please note that samples "P-13 Lower" and "P-14 Upper" were added as controls, with "P-13 Lower" being distilled water and "P-14 Upper" being a duplicate of "P-8 Lower".

C. G. Walls

C. G. Walls

Attachments

cc: Mr. J. O'Neal - Westhollow Research Center

RECEIVED
H.S. & E. SUPPORT
INFORMATION
OCT 19 [illegible]

			JAM
			AGE
			BJD
			FILE
ACTION			
DUE			

WOOD RIVER PETROLEUM COMPLEX

GROUNDWATER MONITORING PROGRAM PURSUANT TO REGULATIONS AT 40 CFR 265.92

; Date SEPT/OCT 1981 PIEZOMETER DATA

sts (Max Specs.[1])	WELL PROFILES					
	P-1 Upper	P-1 Lower	P-2 Upper	P-2 Lower	P-3 Upper	P-3 Lower
Water Surface Elevation, MSL ft						
Water Contamination Parameters						
	7.0	7.6	7.6	7.3	7.6	7.5
ific Conductance, mho/cm@25°C	2050	2000	2375	2175	2150	1850
Organic Carbon, mg/l	45	43	49	49	37	36
Organic Nitrogen, mg/l	*	*	*	*	*	*
Water Quality Parameters						
ride, mg/l	297	383	440	440	355	326
, mg/l	1.4	0.6	0.5	0.4	0.3	0.3
nesse, mg/l	1.3	1.2	1.1	2.3	1.2	1.5
ds, mg/l	0.002	[illegible]	0.002	0.002	[illegible]	[illegible]
mg/l	310	[illegible]	330	[illegible]	[illegible]	[illegible]
ate, mg/l	[illegible]	[illegible]	452	[illegible]	[illegible]	28
ng Water Parameters						
nic, mg/l (0.05)	0.011	0.006	0.012	0.010	0.008	0.012
um, mg/l (1.0)	0.22	0.11	0.16	0.45	0.11	0.21
ium, mg/l (1.01)	0.001	L.T. 0.001	L.T. 0.001	0.005	0.004	0.004
ium, mg/l (0.05)	L.T. 0.1	0.1	L.T. 0.1	0.1	L.T. 0.1	0.1
ride, mg/l (1.4-2.4)	L.T. 1	L.T. 1	L.T. 1	L.T. 1	L.T. 1	L.T. 1
, mg/l (0.05)	0.009	0.004	0.009	0.004	0.005	0.014
ury, mg/l (0.002)	L.T. 0.0005	L.T. 0.0005	L.T. 0.0005	0.0005	L.T. 0.0005	L.T. 0.0005
rate (as N) (10.0)	1.6	2.0	2	L.T. 1	1	1.2
nium, mg/l (0.01)	0.006	L.T. 0.001	0.004	0.004	0.007	0.005
ver, mg/l (0.05)	0.003	0.003	0.004	0.001	0.006	0.005
iform Bacteria, No./100 ml (1.0)	L.T. 10	L.T. 10	L.T. 10	L.T. 10	L.T. 10	L.T. 10
Test Parameters						
atile Organics, ppm, V/V	L.T. 1	L.T. 1	L.T. 1	L.T. 1	L.T. 1	L.T. 1
fonates, mg/l	1	1	L.T. 1	1	1	1
and Grease, mg/l	2	3	3	5	2	2
nide, mg/l	0.004	0.006	0.004	0.007	0.008	0.011
r Detected (Yes - No)	Yes	No	Yes	No	Yes	Yes
fide, mg/l	0.005	0.008	0.008	0.008	0.005	0.005
avalent Chromium, mg/l	L.T. 0.005	L.T. 0.005	L.T. 0.005	L.T. 0.005	L.T. 0.005	L.T. 0.005

NTS:

[1] EPA Interim primary drinking water standards, Federal Register, May 19, 1980, p. 33257.

Analyses to be done by WRC.

WOOD RIVER MANUFACTURING COMPLEX

GROUNDWATER MONITORING PROGRAM PURSUANT TO REGULATIONS AT 40 CFR 265.92

Sampling Date SEPT/OCT 1981 PIEZOMETER DATA

Tests (Max Specs.[1])	WELL METERS					
	P-4 Upper	P-4 Lower	P-5 Upper	P-5 Lower	P-6 Upper	P-6 Lower
Ground Water Surface Elevation, MSL ft			in BR	in BR	@ BR/in	in BR
Ground Water Contamination Parameters						
pH	6.9	7.1	8.0	8.0	7.3	7.2
Specific Conductance, µmho/cm@25°C	2240	2700	1230	870	1070	880
Total Organic Carbon, mg/l	27	35	74	56	29	[illegible]
Total Organic Halogen, mg/l	*	*	*	*	*	*
Ground Water Quality Parameters						
Chloride, mg/l	440	468	[illegible]	[illegible]	19	[illegible]
Iron, mg/l	0.1	0.2	0.2	0.2	[illegible]	[illegible]
Manganese, mg/l	1.5	1.7	1.5	[illegible]	[illegible]	[illegible]
Phenols, mg/l	0.006	[illegible]	[illegible]	[illegible]	[illegible]	[illegible]
Sodium, mg/l	270	[illegible]	12	[illegible]	[illegible]	[illegible]
Sulfate, mg/l	447	[illegible]	135	[illegible]	[illegible]	[illegible]
Drinking Water Parameters						
Arsenic, mg/l (0.05)	0.015	0.02	0.012	0.017	0.009	0.005
Barium, mg/l (1.0)	0.18	0.19	0.88	0.58	0.25	0.25
Cadmium, mg/l (0.01)	L.T. 0.001	L.T. 0.001	0.002	0.006	0.001	0.003
Chromium, mg/l (0.05)	0.1	0.1	L.T. 0.1	L.T. 0.1	L.T. 0.1	L.T. 0.1
Fluoride, mg/l (1.4-2.4)	L.T. 1	L.T. 1	L.T. 1	L.T. 1	L.T. 1	L.T. 1
Lead, mg/l (0.05)	0.008	0.004	0.009	0.005	0.009	0.005
Mercury, mg/l (0.002)	0.0005	0.0005	L.T. 0.0005	L.T. 0.0005	L.T. 0.0005	L.T. 0.0005
Nitrate (as N) (10.0)	L.T. 1	L.T. 1	1.4	1.2	2.4	2.6
Selenium, mg/l (0.01)	0.002	0.002	0.006	0.008	0.007	0.009
Silver, mg/l (0.05)	0.006	0.005	0.004	0.006	0.003	0.003
Coliform Bacteria, No./100 ml (1.0)	L.T. 10	L.T. 10	L.T. 10	L.T. 10	L.T. 10	L.T. 10
Other Test Parameters						
Volatile Organics, ppm, V/V	5	5	L.T. 1	1.1	L.T. 1	15
Sulfonates, mg/l	L.T. 1	L.T. 1	L.T. 1	L.T. 1	L.T. 1	L.T. 1
Oil and Grease, mg/l	4	4	13	9	1	1
Cyanide, mg/l	0.064	0.033	0.003	0.004	0.002	0.001
Odor Detected (Yes - No)	Yes	Yes	Yes	Yes	Yes	Yes
Sulfide, mg/l	L.T. 0.001	0.003	0.035	0.096	0.008	0.001
Hexavalent Chromium, mg/l	L.T. 0.005	L.T. 0.005	L.T. 0.005	L.T. 0.005	L.T. 0.005	L.T. 0.005

COMMENTS:

[1] EPA Interim primary drinking water standards, Federal Register, May 19, 1980, p. 33257.

* Analyses to be done by WRC.

[illegible]

[illegible] RIVER [illegible] COMPLEX

GROUNDWATER MONITORING PROGRAM PERSUANT TO REGULATIONS AT 40 CFR 265.92

Sampling Date SEPT/OCT 1981 PIEZOMETER DATA

Tests (Max Specs.[1])	[illegible]					
	P-7 Upper	P-7 Lower	P-8 Upper	P-8 Lower	P-9 Upper	P-9 Lower
Ground Water Surface Elevation, MSL ft						
Ground Water Contamination Parameters						
pH	7.4	7.5	7.2	7.6	7.2	7.1
Specific Conductance, µmho/cm@25°C	1300	1225	990	2125	1890	1850
Total Organic Carbon, mg/l	53	35	46	27	35	38
Total Organic Halogen, mg/l	*	*	*	*	*	*
Ground Water Quality Parameters						
Chloride, mg/l	198	174	56	426	284	312
Iron, mg/l	0.5	0.9	0.1	0.4	0.1	0.[illegible]
Manganese, mg/l	1.9	0.9	2.7	2.2	1.4	1.2
Phenols, mg/l	0.002	0.002	0.002	0.006	0.002	0.002
[illegible]	208	170	31	268	265	[illegible]
Sulfate, mg/l	225	270	83	402	432	[illegible]
Drinking Water Parameters						
Arsenic, mg/l (0.05)	0.024	0.016	0.020	0.018	0.019	0.007
Barium, mg/l (1.0)	0.03	0.61	0.26	0.24	0.42	0.49
Cadmium, mg/l (0.01)	L.T. 0.001	0.002	L.T. 0.001	0.005	L.T. 0.001	L.T. 0.001
Chromium, mg/l (0.05)	L.T. 0.1	0.1	0.05	0.1	0.02	0.02
Fluoride, mg/l (1.4-2.4)	L.T. 1	L.T. 1	L.T. 1	L.T. 1	L.T. 1	L.T. 1
Lead, mg/l (0.05)	0.005	0.004	0.004	0.004	0.004	0.004
Mercury, mg/l (0.002)	L.T. 0.0005	L.T. 0.0005	L.T. 0.0005	L.T. 0.0005	L.T. 0.0005	L.T. 0.0005
Nitrate (as N) (10.0)	1.7	1.2	L.T. 1	1.0	1.	1.
Selenium, mg/l (0.01)	0.006	0.009	0.005	0.011	0.006	0.006
Silver, mg/l (0.05)	0.001	0.001	0.004	0.008	0.004	L.T. 0.001
Coliform Bacteria, No./100 ml (1.0)	L.T. 10	L.T. 10	L.T. 10	L.T. 10	L.T. 10	L.T. 10
Other Test Parameters						
Volatile Organics, ppm, V/V	L.T. 1	L.T. 1	166	L.T. 1	4	3
Sulfonates, mg/l	L.T. 1	L.T. 1	L.T. 1	1	1	L.T. 1
Oil and Grease, mg/l	5	1	1	9	5	6
Cyanide, mg/l	0.006	0.006	0.005	0.004	0.002	0.002
Odor Detected (Yes - No)	Yes	Yes	Yes	No	Yes	Yes
Sulfide, mg/l	0.005	0.005	0.015	0.014	0.003	0.041
Hexavalent Chromium, mg/l	L.T. .005	L.T. .005	L.T. 0.005	L.T. 0.005	L.T. 0.005	L.T. 0.005

[illegible]

[1] EPA Interim primary drinking water standards, Federal-Register, May 19, 1980, p. 33257.

* Analyses to be done by WRC

SHELL OIL COMPANY

WOOD RIVER MANUFACTURING COMPLEX

GROUNDWATER MONITORING PROGRAM PURSUANT TO REGULATIONS AT 40 CFR 265.92

Sampling Date SEPT/OCT 1981 PIEZOMETER DATA

Tests (Max Specs.[1])	WELL NUMBERS						
	P-10 Upper	P-10 Lower	P-11 Upper	P-11 Lower	P-12 Upper	P-12 Lower	
Ground Water Surface Elevation, MSL ft							
Ground Water Contamination Parameters							
pH	6.8	7.1	8.4	8.2	7.2	7.1	
Specific Conductance, µmho/cm@25°C	2450	2340	1850	1875	140	1020	
Total Organic Carbon, mg/l	45	50	22	[illegible]	22	[illegible]	
Total Organic Halogen, mg/l	*	*	*	*			
Ground Water Quality Parameters							
Chloride, mg/l	497	454	312	397	312	140	
Iron, mg/l	0.6	0.3	0.1	0.1	0.2	L.T. 0.1	
Manganese, mg/l	2.0	2.1	2.2	[illegible]	[illegible]	0.6	
Phenols, mg/l	0.004	0.003	[illegible]	[illegible]	[illegible]	[illegible]	
Sodium mg/l	220	210	235	[illegible]	[illegible]	[illegible]	
Sulfate, mg/l	492	544	357	369	[illegible]	[illegible]	
Drinking Water Parameters							
Arsenic, mg/l (0.05)	0.014	0.020	0.021	0.023	L.T. 0.005	0.006	
Barium, mg/l (1.0)	0.39	0.38	0.31	0.05	0.34	0.25	
Cadmium, mg/l (0.01)	0.002	0.002	0.006	0.002	L.T. .001	0.010	
Chromium, mg/l (0.05)	0.1	0.1	0.1	0.1	0.1	0.1	
Fluoride, mg/l (1.4-2.4)	L.T. 1	L.T. 1	L.T. 1	L.T. 1	L.T. 1	L.T. 1	
Lead, mg/l (0.05)	0.008	0.004	0.004	0.004	L.T. 0.003	0.005	
Mercury, mg/l (0.002)	L.T.0.0005	L.T.0.0005	L.T.0.0005	L.T.0.0005	L.T.0.0005	0.000	
Nitrate (as N) (10.0)	1.2	L.T. 1	0.7	2.1	0.3	0.6	
Selenium, mg/l (0.01)	0.002	0.001	0.003	0.009	0.009	0.005	
Silver, mg/l (0.05)	0.004	0.007	0.001	L.T. 0.001	0.005	0.003	
Coliform Bacteria, No./100 ml (1.0)	L.T. 10	L.T. 10	L.T. 10	L.T. 10	L.T. 10	L.T. 10	
Other Test Parameters							
Volatile Organics, ppm, V/V	L.T. 1	L.T. 1	L.T. 1	L.T. 1	L.T. 1	L.T. 1	
Sulfonates, mg/l	L.T. 1	L.T. 1	L.T. 1	L.T. 1	L.T. 1	1	
Oil and Grease, mg/l	4	5	9	9	1	1	
Cyanide, mg/l	0.104	0.133	0.004	0.003	0.002	0.002	
Odor Detected (Yes - No)	Yes	Yes	No	No	No	No	
Sulfide, mg/l	0.003	0.003	0.014	0.008	0.003	0.003	
Hexavalent Chromium, mg/l	L.T. .005	L.T. .005	L.T. 0.005	L.T.0.005	L.T. 0.005	L.T. 0.005	

COMMENTS:

[1] EPA Interim primary drinking water standards, Federal Register, May 19, 1980, p. 33257.

* Analyses to be done by WRC

WOOD RIVER LANDFILL COMPLEX

GROUNDWATER MONITORING PROGRAM PURSUANT TO REGULATIONS AT 40 CFR 265.92

Sampling Date SEPT/OCT 1981 PIEZOMETER DATA

Tests (Max Specs.[1])	WELL NUMBERS						
	P-13 Lower	P-14 Upper					
Ground Water Surface Elevation, MSL ft							
Ground Water Contamination Parameters							
pH	6.5	7.6					
Specific Conductance, μmho/cm@25°C	9	2475					
Total Organic Carbon, mg/l	4	44					
Total Organic Halogen, mg/l	*	*					
Ground Water Quality Parameters							
Chloride, mg/l	14	411					
Iron, mg/l	0.7	0.5					
Manganese, mg/l	0.2	2.6					
Phenols, mg/l	0.004	0.006					
Sodium mg/l	23	326					
Sulfate, mg/l	82	23					
Drinking Water Parameters							
Arsenic, mg/l (0.05)	0.018	0.022					
Barium, mg/l (1.0)	L.T. 0.01	0.29					
Cadmium, mg/l (0.01)	L.T. 0.001	L.T. 0.001					
Chromium, mg/l (0.05)	0.1	0.1					
Fluoride, mg/l (1.4-2.4)	L.T. 1	L.T. 1					
Lead, mg/l (0.05)	0.004	0.004					
Mercury, mg/l (0.002)	L.T 0.0005	L.T. 0.0005					
Nitrate (as N) (10.0)	L.T. 1	1.1					
Selenium, mg/l (0.01)	0.010	0.009					
Silver, mg/l (0.05)	L.T. 0.001	0.002					
Coliform Bacteria, No./100 ml (1.0)	L.T. 10	L.T. 10					
Other Test Parameters							
Volatile Organics, ppm, V/V	L.T. 1	L.T. 1					
Sulfonates, mg/l	L.T. 1	L.T. 1					
Oil and Grease, mg/l	1	3					
Cyanide, mg/l	0.001	0.004					
Odor Detected (Yes - No)	No	No					
Sulfide, mg/l	0.008	0.025					
Hexavalent Chromium, mg/l	L.T. 0.005	L.T. 0.005					

COMMENTS:

[1] EPA Interim primary drinking water standards, Federal Register, May 19, 1980, p. 33257.

* Analyses to be done by WRC.

PIEZOMETER SAMPLING WATER ELEVATION

DATE SAMPLED	PIEZOMETER NUMBER	WATER ELEVATION (MSL) BEFORE PUMPING	WATER ELEVATION (MSL) AFTER PUMPING
10/5/81	P-1 UPPER	401.55	401.55
10/5/81	P-1 LOWER	401.53	401.56
10/5/81	P-2 UPPER	400.95	400.94
10/5/81	P-2 LOWER	400.91	400.96
10/6/81	P-3 UPPER	400.64	400.66
10/6/81	P-3 LOWER	400.65	400.67
10/2/81	P-4 UPPER	402.16	402.20
10/2/81	P-4 LOWER	399.13	399.15
10/8/81	P-5 UPPER	399.77	398.87
10/8/81	P-5 LOWER	400.98	400.74
10/7/81	P-6 UPPER	399.31	399.39
10/7/81	P-6 LOWER	400.42	400.27
10/6/81	P-7 UPPER	399.56	399.62
10/6/81	P-7 LOWER	399.54	399.61
10/30/81	P-8 UPPER	396.44	396.60
10/22/81	P-8 LOWER	39[illegible]	396.76

DATE SAMPLED	PIEZOMETER NUMBER	WATER ELEVATION (MSL) BEFORE PUMPING	AFTER PUMPING
9/30/81	P-9 UPPER	395.55	395.74
9/30/81	P-9 LOWER	394.56	394.56
10/2/81	P-10 UPPER	395.31	395.40
10/2/81	P-10 LOWER	395.26	395.28
8/27/81	P-11 UPPER	396.37	396.42
8/27/81	P-11 LOWER	396.35	396.40
8/26/81	P-12 UPPER	406.89	406.91
8/26/81	P-12 LOWER	406.88	406.92
10/13/81	P-12 LOWER	405.74	405.71
8/27/81	P-13 LOWER = DISTILLED WATER	N/A	N/A
8/28/81	P-14 UPPER = P-8 LOWER	N/A	N/A

IXD
10/15/81

		Flash PM (°F)	Soluble Cyanide mg/l	Total Cyanide (Reactive) mg/g	Soluble Sulfide mg/l	Total Sulfide (Reactive) mg/g	pH Value	As	Ba	Cd	Cr (Total)	Cu	Pb	Hg	Ag	Se	Ni	Zn	Cr (Hexavalent)
								EP Toxicity Test mg/l											
10/12/81 Solid Waste Disposal Basin**	A1	>210	<0.01		<0.05	1700	8.01	0.002	2.65	0.002	0.031	0.050	0.014	<0.005	0.031	0.002	0.04	<0.01	<0.01
	A2	>210	<0.01		<0.05	2750	6.43	0.002	2.55	<0.001	0.037	0.033	0.019	<0.005	0.029	<0.001	0.02	<0.01	<0.002
	A3																		
	B1	>210	0.01		<0.05	2000	8.39	0.001	2.55	0.001	0.028	0.047	0.035	<0.005	0.032	0.002	0.05	<0.01	<0.005
	B2	>210	<0.01		<0.05	950	8.08	0.002	1.95	0.005	0.039	0.049	0.062	<0.005	0.037	<0.001	0.02	<0.01	<0.005
	B3	>210	<0.01		<0.05	220	9.29	0.002	2.50	0.001	0.035	0.040	0.034	<0.005	0.031	0.002	<0.01	<0.01	<0.005
	C1	>210	<0.01		<0.05	390	9.21	0.001	2.00	<0.001	0.033	0.047	0.020	<0.005	0.025	<0.001	0.05	<0.01	[illegible]
	C2	>210	<0.01		<0.05	280	9.01	0.002	3.70	<0.001	0.032	0.041	0.055	<0.005	0.030	0.001	0.09	<0.01	<0.005
	C3	>210	<0.01		<0.05	135	9.31	0.001	2.55	<0.001	0.037	0.038	0.013	<0.005	0.029	0.003	<0.01	<0.01	<0.005
	D1	>210	<0.01		<0.05	150	8.98	0.001	1.75	0.004	0.034	0.044	0.022	<0.005	0.032	0.004	0.16	<0.01	<0.005
	D2	>210	<0.01		<0.05	850	9.16	0.001	2.80	0.001	0.034	0.043	0.022	<0.005	0.026	0.001	<0.01	<0.01	<0.005
	D3	>210	0.01		<0.05	200	9.15	0.003	1.60	0.001	0.082	0.031	0.050	<0.005	0.025	0.002	0.43	1.82	<0.002
5/6/81 Master Box Solids		113	<50 mg/g	<1.0	40 mg/g	300	8.50*	0.007	5.00	<0.001	0.002	0.002	0.001	0.005	0.001	0.012			<0.025
5/6/81 DAF-2 Solids		>210	<50 mg/g	<1.0	20 mg/g	300	7.34*	0.009	0.03	0.004	0.015	0.005	<0.001	<0.005	<0.001	0.009			<0.025
5/6/81 Cooling Water Sludge		>210	<50 mg/g	<1.0	20 mg/g	20.0	10.14*	0.002	1.54	0.041	0.001	0.002	0.003	0.0024	<0.001	0.009			<0.025
5/6/81 Boiler House Solids		>210	<50 mg/g	<1.0	20 mg/g	30.0	10.38*	0.011	3.70	0.005	0.025	0.023	0.001	<0.001	0.002	0.001			<0.025
10/22/81 Pond 1 Solids		>210	<0.01 mg/l		<0.05 mg/l		7.92	0.002	2.85	0.001	0.037	0.072	0.07	<0.0005	0.019	0.001	0.05	<0.01	<0.025
10/22/81 Pond 2 Solids		>210	<0.01		<0.05		7.24	0.001	2.1	0.001	0.037	0.043	<0.01	<0.0005	0.030	0.002	0.06	<0.01	<0.025
10/22/81 North Lagoon Solids		>210	<0.01		<0.05		7.32	<0.001	2.0	<0.001	0.015	0.038	0.11	<0.001	0.019	0.001	0.04	<0.01	<0.025
10/22/81 South Lagoon Solids		>210	<0.01		<0.05		7.14	<0.001	2.7	0.007	0.025	0.040	0.05	<0.0005	0.043	0.001	0.04	0.12	<0.025
6/9/82 End of pipe (Solid waste disposal basin)		>210		<0.05		2.0	9.24	<0.001	0.96	<0.001	0.019	0.035	0.20	<0.005	0.011	<0.01	<0.01	0.039	<0.005
6/3/82 DAF-1 Solids		>210		0.35		<2.0	9.27	<0.001	0.82	<0.001	0.020	0.020	0.20	<0.005	0.014	<0.01	0.06	0.043	<0.005
6/3/82 Master Box Solids		>210		<0.05		<2.0	9.72	<0.001	0.97	0.001	0.016	0.032	0.15	<0.005	0.013	<0.01	0.07	0.048	<0.005
6/2/82 Box 11 Solids		>210		0.10		2.0	9.32	<0.001	0.96	<0.001	0.027	0.034	0.22	<0.005	0.020	<0.01	<0.01	0.103	<0.005
8/12/82 End of pipe (Solid waste disposal basin)		>210		0.29		9.6	8.52	0.005	0.56	<0.001	0.012	0.019	<0.01	<0.005	0.007	<0.01	0.01	0.084	<0.005
8/12/82 DAF-1 Solids		>210		0.35		<0.4	9.17	0.006	0.38	<0.001	0.008	0.011	<0.01	<0.005	0.001	<0.01	0.01	0.051	<0.005
8/12/82 Pond 2 Solids		>210		0.75		1.6	6.76*	0.005	0.26	0.017	0.016	0.022	<0.01	<0.005	<0.001	<0.01	<0.01	0.107	<0.005
8/12/82 DAF-2 Float		>210		0.002		8.0	6.70*	0.011	0.24	0.041	0.017	0.021	<0.01	<0.005	0.004	<0.01	0.01	0.077	<0.005
8/12/82 Box 11		>210		0.33		280	6.16*	0.008	0.09	0.021	0.035	0.035	0.01	<0.005	0.003	<0.01	0.01	1.22	<0.005
8/12/82 Master Box		119		<0.001		450	6.84*	<0.001	0.43	0.017	0.007	0.016	0.02	<0.005	<0.001	<0.01	0.10	0.072	<0.005

** see drawing attached

* 10% w/v solution

Analysis performed by Environmental Analysis Inc. St. Louis

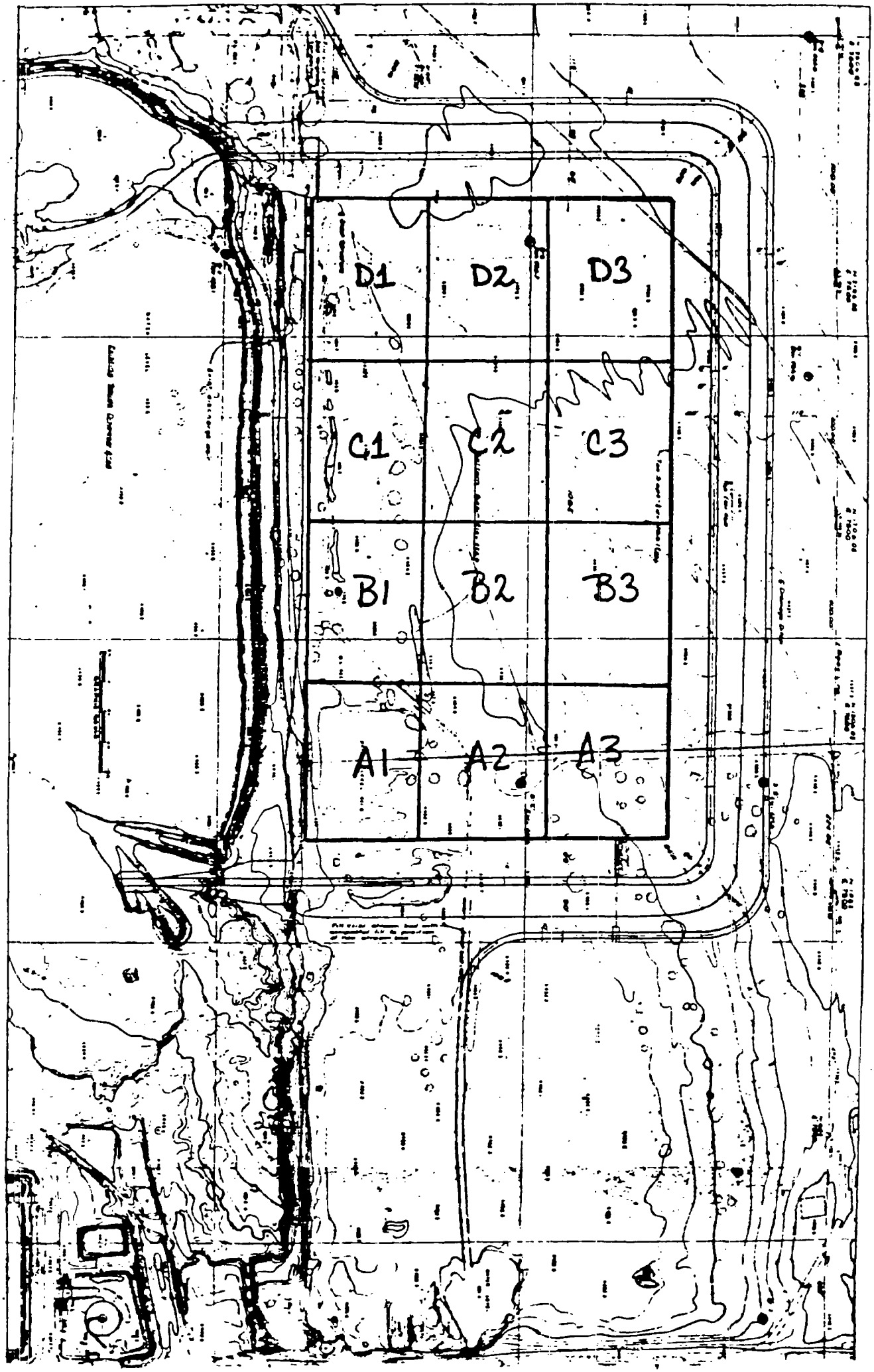
D1
D2
D3
C1
C2
C3
B1
B2
B3
A1
A2
A3