QUALITY ASSURANCE PROJECT PLAN
FOR
TITTABAWASSEE RIVER RESIDENTIAL FLOODPLAIN SAMPLING
SAGINAW COUNTY, MICHIGAN

NPL STATUS: NON-NPL

Prepared for

UNITED STATES ENVIRONMENTAL PROTECTION AGENCY
Region 5
Emergency Response Branch
9311 Groh Road
Grosse Ile, MI 48138

Prepared by

WESTON SOLUTIONS, INC.
7800 West Outer Drive, Suite 200
Detroit, MI 48235

Date Prepared	April 18, 2008
TDD Number	S05-0012-0802-011
Document Control Number	390-2E-ABQL
Contract Number	EP-S5-06-04
WESTON Project Manager	Alexandra Clark
Telephone Number	(313) 739-2533
U.S. EPA On-Scene Coordinator	Jeffrey Kimble

TABLE OF CONTENTS

QAPP Worksheet #1.	Title and Approval Page	1
QAPP Worksheet #2.	QAPP Identifying Information	3
QAPP Worksheet #3.	Distribution List	7
QAPP Worksheet #4.	Project Personnel Sign-Off Sheet	9
QAPP Worksheet #5.	Project Organizational Chart	10
QAPP Worksheet #6.	Communication Pathways	11
QAPP Worksheet #7.	Personnel Responsibilities and Qualifications Table	13
QAPP Worksheet #8.	Special Personnel Training Requirements Table	15
QAPP Worksheet #9.	Project Scoping Session Participants Sheet	16
QAPP Worksheet #10.	Problem Definition	20
QAPP Worksheet #11.	Project Quality Objectives/Systematic Planning Process Statements	22
QAPP Worksheet #12.	Measurement Performance Criteria Table	25
QAPP Worksheet #13.	Secondary Data Criteria and Limitations Table	27
QAPP Worksheet #14.	Summary of Project Tasks	28
QAPP Worksheet #15.	Reference Limits and Evaluation Table	30
QAPP Worksheet #16.	Project Schedule/Timeline Table	34
QAPP Worksheet #17.	Sampling Design and Rationale	35
QAPP Worksheet #18.	Sampling Locations and Methods/SOP Requirements Table	37
QAPP Worksheet #19.	Analytical SOP Requirements Table	28
QAPP Worksheet #20.	Field Quality Control Sample Summary Table	40
QAPP Worksheet #21.	Project Sampling SOP Reference Table	41
QAPP Worksheet #22.	Field Equipment Calibration, Maintenance, Testing, and Inspection Table	42
QAPP Worksheet #23.	Analytical SOP Reference Table	43
QAPP Worksheet #24.	Analytical Instrument Calibration Table	45
QAPP Worksheet #25.	Analytical Instrument and Equipment Maintenance, Testing, and Inspection Table	48
QAPP Worksheet #26	Sample Handling System	50
QAPP Worksheet #27.	Sample Custody Requirements	52
QAPP Worksheet #28.	QC Samples Table	54
QAPP Worksheet #29.	Project Documents and Records Table	65
QAPP Worksheet #30.	Analytical Services Table	66
QAPP Worksheet #31.	Planned Project Assessment Table	68
QAPP Worksheet #32.	Assessment Findings and Response Actions	69
QAPP Worksheet #33.	QA Management Reports Table	70
QAPP Worksheet #34.	Sampling and Analysis Verification (Step I) Process Table	71
QAPP Worksheet #35.	Sampling and Analysis Validation (Steps IIa and IIb) Process Table	72
QAPP Worksheet #36.	Sampling and Analysis Validation (Steps IIa and IIb) Summary Table	73
QAPP Worksheet #37.	Data Usability Assessment	74

LIST OF APPENDICES

Appendix A – Field Sampling SOPs
Appendix B - Laboratory SOPs
Appendix C – Example Chain-of-Custody Forms and Seal
Appendix D – Project Personnel Resumes

QAPP Worksheet #1
Title and Approval Page

Site Name/Project Name: Tittabawassee River Residential Floodplain Sampling (Tittabawassee River)
Site Location: Saginaw County, Michigan

Quality Assurance Project Plan for the Tittabawassee River Residential Floodplain Sampling
Document Title

United States Environmental Protection Agency (U.S. EPA) Region 5
Lead Organization

Lisa Graczyk, WESTON START Team
Preparer's Name and Organizational Affiliation

20 North Wacker Drive, Suite 1210, Chicago, IL, 60606, 312-424-3300, graczyk@dynamac.com
Preparer's Address, Telephone Number, and E-mail Address

March 7 2008
Preparation Date (Day/Month/Year)

Investigative Organization's Project Manager:_____
Signature

_Alexandra Clark, WESTON,_____
Printed Name/Organization/Date

Investigative Organization's Project QA Officer:_____
Signature

_Tonya Balla, WESTON_____
Printed Name/Organization/Date

Laboratory Quality Control Manager:_____
Signature

_Test America, Pamela Schemmer,_____
Printed Name/Organization/Date

Laboratory Quality Control Manager:_____
Signature

_Pace Analytical, Melanie Ollila,_____
Printed Name/Organization/Date

Lead Organization's Project Manager:_____
Signature___

_Jeffrey Kimble, U.S. EPA,_____
Printed Name/Organization/Date

QAPP Worksheet #1
Title and Approval Page (Continued)

Approval Signatures:_____
Signature

_____
Printed Name/Title/Date

_____

_____
Approval Authority

Other Approval Signatures:_____
Signature

_____
Printed Name/Title/Date

Document Control Number: 390-2E-ABQL

QAPP Worksheet #2
QAPP Identifying Information

Site Name/Project Name: Tittabawassee River
Site Location: Saginaw County, Michigan
Site Number/Code: MID980994354
Operable Unit: Not Applicable (NA)
Contractor Name: WESTON
Contractor Number: EP-S5-06-04
Contract Title: Superfund Technical Assessment and Response Team (START)
Work Assignment Number: S05-0012-0802-011

1. Identify guidance used to prepare QAPP:

   Uniform Federal Policy for Quality Assurance Project Plans

2. Identify regulatory program: U.S. EPA Region 5, Emergency Response Branch

3. Identify approval entity: U.S. EPA Region 5

4. Indicate whether the QAPP is a generic or a project-specific QAPP. (circle one)

5. List dates of scoping sessions that were held: February 20, 2008: discussed project background, scope of work, and immediate action items.
   February 25, 2008: Site visit.
   February 28, 2008: Multi-Agency meeting (U.S. EPA, MDEQ, MDCH, WESTON)

6. List dates and titles of QAPP documents written for previous site work, if applicable:

Title	Approval Date
NA	

7. List organizational partners (stakeholders) and connection with lead organization: Michigan Department of Environmental Quality (MDEQ) and Michigan Department of Community Health (MDCH) are both partner regulatory agencies. However, they are not projected to directly sign off and approve the QAPP.

8. List data users: U.S. EPA Region 5, On-Scene Coordinator (OSC), MDEQ, MDCH, and Superfund Technical Assessment and Response Team (START) contractor – WESTON.

9. If any required QAPP elements and required information are not applicable to the project, then circle the omitted QAPP elements and required information on the attached table. Provide an explanation for their exclusion below: There will be no screening or confirmatory-type analyses for this site.

Identify where each required QAPP element is located in the QAPP (provide section, worksheet, table, or figure number) or other project planning documents (provide complete document title, date, section number, page numbers, and location of the information in the document). Circle QAPP elements and required information that are not applicable to the project. Provide an explanation in the QAPP.

Required QAPP Element(s) and Corresponding QAPP Section(s)	Required Information	Crosswalk to Worksheet # or Related Documents
Project Management and Objectives		
2.1 Title and Approval Page	- Title and Approval Page	1
2.2 Document Format and Table of Contents 2.2.1 Document Control Format 2.2.2 Document Control Numbering System 2.2.3 Table of Contents 2.2.4 QAPP Identifying Information	- Table of Contents - QAPP Identifying Information	2 2
2.3 Distribution List/ Project Personnel Sign-Off Sheet 2.3.1 Distribution List 2.3.2 Project Personnel Sign-Off Sheet	- Distribution List - Project Personnel Sign-Off Sheet	3 4
2.4 Project Organization 2.4.1 Project Organizational Chart 2.4.2 Communication Pathways 2.4.3 Personnel Responsibilities and Qualifications 2.4.4 Special Training Requirements and Certification	- Project Organizational Chart - Communication Pathways - Personnel Responsibilities and Qualifications Table - Special Personnel Training Requirements Table	5 6 7 and Appendix D 8
2.5 Project Planning/Problem Definition 2.5.1 Project Planning (Scoping) 2.5.2 Problem Definition, Site History, and Background	- Project Planning Session Documentation (including Data Needs tables) - Project Scoping Session Participants Sheet - Problem Definition, Site History, and Background - Site Maps (historical and present)	9 9 10 10
2.6 Project Quality Objectives and Measurement Performance Criteria 2.6.1 Development of Project Quality Objectives Using the Systematic Planning Process 2.6.2 Measurement Performance Criteria	- Site-Specific PQOs - Measurement Performance Criteria Table	11 12
2.7 Secondary Data Evaluation	- Sources of Secondary Data and Information - Secondary Data Criteria and Limitations Table	13 13

Required QAPP Element(s) and Corresponding QAPP Section(s)	Required Information	Crosswalk to Worksheet # or Related Documents
2.8 Project Overview and Schedule 2.8.1 Project Overview 2.8.2 Project Schedule	- Summary of Project Tasks - Reference Limits and Evaluation Table - Project Schedule/Timeline Table	14 15 16
Measurement/Data Acquisition		
3.1 Sampling Tasks 3.1.1 Sampling Process Design and Rationale 3.1.2 Sampling Procedures and Requirements 3.1.2.1 Sampling Collection Procedures 3.1.2.2 Sample Containers, Volume, and Preservation 3.1.2.3 Equipment/Sample Containers Cleaning and Decontamination Procedures 3.1.2.4 Field Equipment Calibration, Maintenance, Testing, and Inspection Procedures 3.1.2.5 Supply Inspection and Acceptance Procedures 3.1.2.6 Field Documentation Procedures	- Sampling Design and Rationale - Sample Location Map - Sampling Locations and Methods/ SOP Requirements Table - Analytical Methods/SOP Requirements Table - Field Quality Control Sample Summary Table - Sampling SOPs - Project Sampling SOP References Table - Field Equipment Calibration, Maintenance, Testing, and Inspection Table	17 17 18 19 and Appendix B 20 Appendix A 21 22
3.2 Analytical Tasks 3.2.1 Analytical SOPs 3.2.2 Analytical Instrument Calibration Procedures 3.2.3 Analytical Instrument and Equipment Maintenance, Testing, and Inspection Procedures 3.2.4 Analytical Supply Inspection and Acceptance Procedures	- Analytical SOPs - Analytical SOP References Table - Analytical Instrument Calibration Table - Analytical Instrument and Equipment Maintenance, Testing, and Inspection Table	Appendix B 23 24 25
3.3 Sample Collection Documentation, Handling, Tracking, and Custody Procedures 3.3.1 Sample Collection Documentation 3.3.2 Sample Handling and Tracking System 3.3.3 Sample Custody	- Sample Collection Documentation Handling, Tracking, and Custody SOPs - Sample Container Identification - Sample Handling Flow Diagram - Example Chain-of-Custody Form and Seal	26 27 27 Appendix C
3.4 Quality Control Samples 3.4.1 Sampling Quality Control Samples 3.4.2 Analytical Quality Control Samples	- QC Samples Table - Screening/Confirmatory Analysis Decision Tree	28

Required QAPP Element(s) and Corresponding QAPP Section(s)	Required Information	Crosswalk to Worksheet # or Related Documents
3.5 Data Management Tasks 3.5.1 Project Documentation and Records 3.5.2 Data Package Deliverables 3.5.3 Data Reporting Formats 3.5.4 Data Handling and Management 3.5.5 Data Tracking and Control	- Project Documents and Records Table - Analytical Services Table - Data Management SOPs	29 30
Assessment/Oversight		
4.1 Assessments and Response Actions 4.1.1 Planned Assessments 4.1.2 Assessment Findings and Corrective Action Responses	- Assessments and Response Actions - Planned Project Assessments Table - Audit Checklists - Assessment Findings and Corrective Action Responses Table	31 31 31 32
4.2 QA Management Reports	- QA Management Reports Table	33
4.3 Final Project Report		33
Data Review		
5.1 Overview		
5.2 Data Review Steps 5.2.1 Step I: Verification 5.2.2 Step II: Validation 5.2.2.1 Step IIa Validation Activities 5.2.2.2 Step IIb Validation Activities 5.2.3 Step III: Usability Assessment 5.2.3.1 Data Limitations and Actions from Usability Assessment 5.2.3.2 Activities	- Verification (Step I) Process Table - Validation (Steps IIa and IIb) Process Table - Validation (Steps IIa and IIb) Summary Table - Usability Assessment	34 35 36 37
5.3 Streamlining Data Review 5.3.1 Data Review Steps To Be Streamlined 5.3.2 Criteria for Streamlining Data Review 5.3.3 Amounts and Types of Data Appropriate for Streamlining		

QAPP Worksheet #3
Distribution List

QAPP Recipients	Title	Organization	Telephone Number	Fax Number	E-mail Address	Document Control Number
Jeff Kimble	OSC	U.S. EPA	734-692-7688	734-692-7677	kimble.jeffrey@epa.gov	390-2E-ABQL
Mark Durno	Emergency Response Section 1Chief	U.S. EPA	440-250-1743	440-250-1750	durno.mark@epa.gov	390-2E-ABQL
Al Taylor	MDEQ, Hazardous Waste Division	MDEQ	517-335-4799	517-241-3571	taylora@michigan.gov	390-2E-ABQL
Linda Dykema	MDCH, Environmental Health	MDCH	517-335-8566	517-335-9775	dykemal@michigan.gov	390-2E-ABQL
Alex Clark	Project Manager	WESTON	313-739-2533	313-739-2501	A.Clark@WestonSolutions.com	390-2E-ABQL
Dan Capone	START Deputy Program Manager	WESTON	517-381-5932	517-381-5921	Dan.Capone@westonsolutions.com	390-2E-ABQL
Tonya Balla	Project Quality Assurance Officer	WESTON	847- 918-4094	847-918-4055	T.Balla@WestonSolutions.com	390-2E-ABQL
Linda Korobka	Analytical Services Coordinator and Data Validator	WESTON	517- 381-5936	517-381-5921	Linda.Korobka@WestonSolutions.com	390-2E-ABQL
Lori Kozel	Site Leader	WESTON	313-739-2527	313-739-2501	Lori.Kozel@westonsolutions.com	390-2E-ABQL
Robert Weidenfeld	Laboratory Project Manager	TestAmerica	916-374-4333	916-372-1059	Robert.Weidenfeld@TestAmericaInc.com	390-2E-ABQL
Scott Unze	Laboratory Project Manager	Pace	612-607-6383	612-607-6444	Scott.Unze@PaceLabs.com	390-2E-ABQL
Ida Levin	Field Services Section (FSS) QAPP Reviewer	U.S. EPA	312-886-6254	312-353-9281	levin.ida@epa.gov	390-2E-ABQL

QAPP Recipients	Title	Organization	Telephone Number	Fax Number	E-mail Address	Document Control Number

Notes:
FSS – Field Services Section
MDCH – Michigan Department of Community Health
MDEQ – Michigan Department of Environmental Quality
OSC – On-Scene Coordinator
U.S. EPA – United States Environmental Protection Agency

QAPP Worksheet #4
Project Personnel Sign-Off Sheet

Organization: Weston Solutions, Inc.

Project Personnel	Title	Telephone Number	Signature	Date QAPP Read
Jeff Kimble	OSC	734-692-7688		
Alex Clark	Project Manager	313-739-2533		
Dan Capone	START Deputy Program Manager	517-381-5932		
Tonya Balla	Project Quality Assurance Officer	847- 918-4094		
Lisa Graczyk	QAPP Preparer	312-424-3339		
Linda Korobka	Analytical Services Coordinator and Data Validator	517- 381-5936		
Lori Kozel	Site Leader	313-739-2527		
Pamela Schemmer	TestAmerica QC Manager	916-374-4441		
Melanie Ollila	Pace Labs QC Manager	612-607-6352		
Ida Levin	FSS QAPP Reviewer	312-353-9281		

Notes:
FSS – Field Services Section
OSC – On-Scene Coordinator
QA – Quality Assurance
QAPP – Quality Assurance Project Plan
U.S. EPA – United States Environmental Protection Agency

QAPP Worksheet #5
Project Organizational Chart

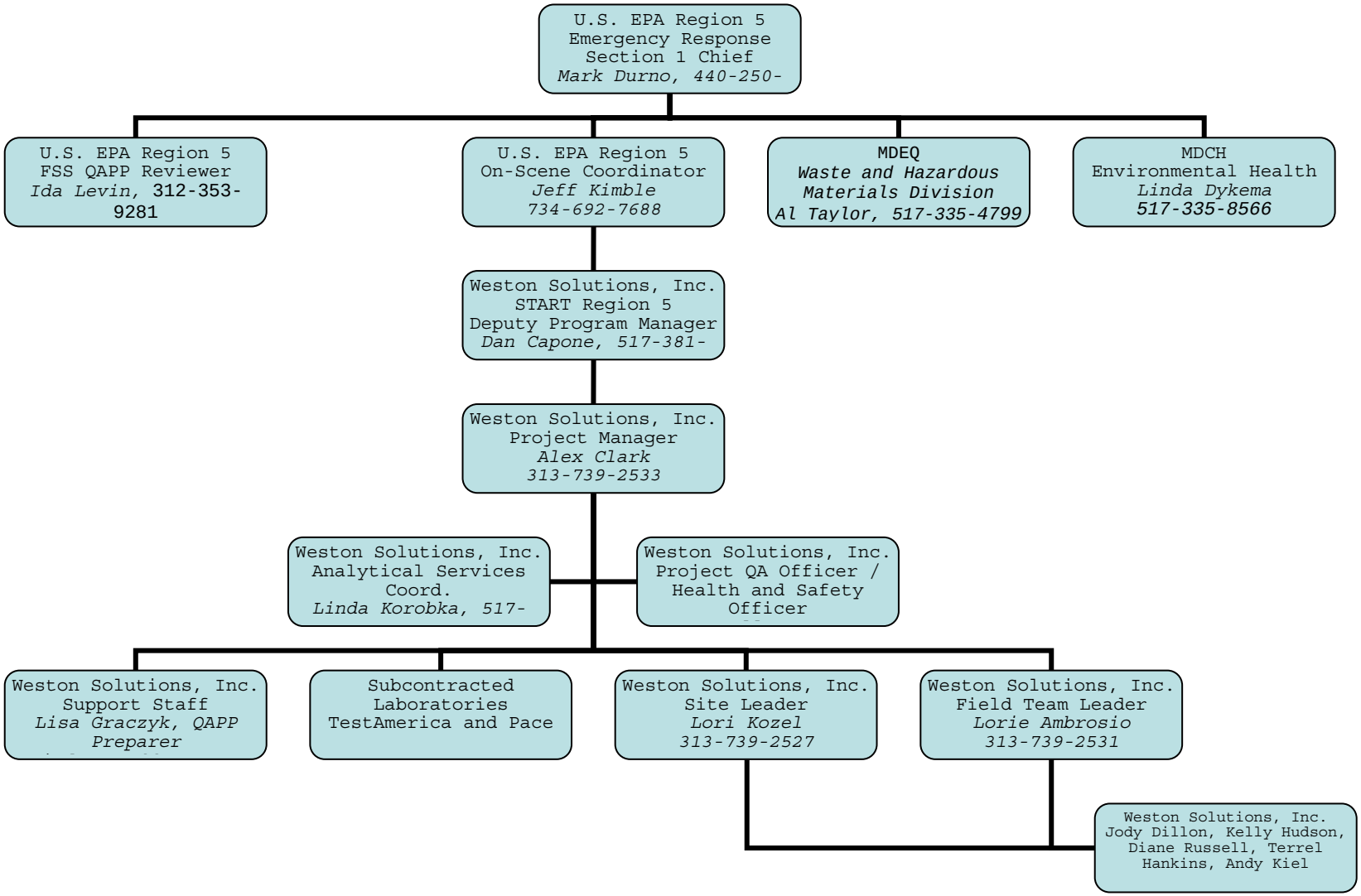

QAPP Worksheet #6
Communication Pathways

Communication Drivers	Responsible Entity	Name	Phone Number	Procedure (Timing, Pathways, etc.)
Project scope changes	OSC	Jeff Kimble	734-692-7688	The OSC will inform the WESTON Project Manager of any project scope changes. The Project Manager will in turn inform the START Deputy Program Manger of the changes and the Project Quality Assurance Officer.
Management of required project tasks	Project Manager	Alex Clark	313-739-2533	The Project Manager will inform the appropriate WESTON project staff (field and non-field support) of tasks to complete and required date for completion of tasks. The Weston project staff will communicate with he project manager of task progress and resources/information required to complete task.
Delays or changes to field work	Site Leader	Lori Kozel	313-739-2527	The Site Leader will inform the Project Manger of any delays or changes to field work by telephone. The Project Manager will inform the OSC by telephone.
Daily field updates	Site Leader	Lori Kozel	313-739-2527	The Site Leader will inform the Project Manger of daily field progress by telephone. The Project Manager will inform the OSC of field work progress by telephone or email.
Reporting of Laboratory Data Quality Issues	Laboratory Project Managers	Scott Unze-*Pace* Robert Weidenfeld-*TestAmerica*	612-6076383 916-374-4333	The laboratory Project Manager will inform Linda Korobka, the analytical services coordinator, of any issues related to data quality upon receipt of samples or during analyses. The analytical services coordinator will inform the Project Quality Assurance Officer and the Project Manager who will in turn notify the OSC.

Communication Drivers	Responsible Entity	Name	Phone Number	Procedure (Timing, Pathways, etc.)
Recommendations to stop work and initiation of corrective actions	QA Officer/OSC/Project Manager	Tonya Balla/Jeff Kimble/Alex Clark	847- 918-4094/734-692-7688/313-739-2533	The QA Officer, Project Manager, and OSC all have the authority to stop work and initiate corrective actions should there be a reason to do so. Whoever stops the work/initiates corrective actions will inform the Site Leader and Project Manager immediately. The Project Manager will ensure that the QA Officer and OSC are informed of the stop work and corrective actions.
Distribution of analytical data	Analytical Services Coordinator	Linda Korobka	517- 381-5936	The Analytical Services Coordinator will receive all deliverables from the laboratory and distribute them to the Project Manager and data validator. The Project Manager will distribute data and data validation report to the OSC. The OSC will distribute the data to other interested parties (including the MDEQ and MDCH).
Approval of QAPP Amendments	U.S. EPA QAPP Reviewer	Ida Levin	312-353-9281	Approval of all QAPP amendments will be by the FSS Quality Assurance reviewer prior to the changes being implemented.

Notes:
FSS – Field Services Section
MDCH – Michigan Department of Community Health
MDEQ – Michigan Department of Environmental Quality
OSC – On-Scene Coordinator
QA – Quality Assurance
QAPP – Quality Assurance Project Plan
U.S. EPA – United States Environmental Protection Agency
WESTON – Weston Solutions, Inc

QAPP Worksheet #7
Personnel Responsibilities and Qualifications Table

Name	Title	Organizational Affiliation	Responsibilities	Education and Experience Qualifications
Pam Bayles	START Region 5 Program Manager	WESTON	The START Program Manager is responsible for ensuring the quality of work performed under the Region 5 START III contract. The START Program Manager interfaces directly with the U.S. EPA Contracting Officer and Project Officer, and has overall responsibility and direction for task assignments.	M.E.M. (Masters in Environmental Management), Air and Water Resources; B.S., Biology; over 18 years experience
Dan Capone	START Deputy Program Manager	WESTON	The START Deputy Program Manager is responsible for insuring that the Project Manager has the personnel and equipment resources and technical resources needed to complete all aspects of the project.	B.A., Biology; over 20 years experience
Alex Clark	Project Manager	WESTON	The Project Manager is responsible for managing all aspects of the project, WESTON project personnel, and subcontractors. The Project Manager interfaces directly with the U.S. EPA OSC regarding all project tasks.	BS., Environmental Studies and Applications; over 10 years experience
Tonya Balla	QA Officer / Health and Safety Officer	WESTON	The QA Officer reviews the project QAPP and has overall responsibility for project quality assurance. The Health and Safety Officer approves the Health and Safety Plan and provides guidance to field personnel on health and safety issues.	B.S., Environmental Engineering; over 16 years experience

Name	Title	Organizational Affiliation	Responsibilities	Education and Experience Qualifications
Linda Korobka	Analytical Services Coordinator / Data Validator	WESTON	The Analytical Services Coordinator is responsible for the procurement of the subcontracted laboratory and is the main interface with the laboratory regarding project deliverables and quality assurance/quality control aspects of the analyses. The Project Manager interfaces with the laboratory through the Analytical Services Coordinator. The Data Validator is responsible for conducting data validation.	B.S., Chemistry; over 20 years experience
Lori Kozel	Site Leader	WESTON	The Site Leader manages the field team and all work performed in the field. The Site Leader interfaces directly with the Project Manager regarding field tasks and any issues that arise while in the field.	B.S., Earth Science; over 7 years experience
Pamela Schemmer Robert Hrabak	Laboratory QA Officer Laboratory Operations Manager	TestAmerica Laboratories, Inc.	The Laboratory QA Officer is responsible for ensuring that the analyses are carried in accordance with laboratory SOPs and the project QAPP. The Laboratory Operations Manager is responsible for ensuring that the second level review is complete and documented for all deliverables prior to their distribution to WESTON.	B.S. Chemistry; 18 yrs environmental lab experience B.S. Biological Sciences, 21 years experience in the industry
Melanie Ollila	Laboratory QC Manager	Pace Analytical Services, Inc.	The Laboratory QA Officer is responsible for ensuring that the analyses are carried in accordance with laboratory SOPs and the project QAPP. The QA Officer is also responsible for reviewing all deliverables prior to their distribution to WESTON.	B.S. Chemistry-BioChem opt; 13 yrs environmental lab experience
Robert Weidenfeld Scott Unze	Laboratory Project Managers	TestAmerica Laboratories, Inc. Pace Analytical Services, Inc.	The laboratory project manager is the direct interface between WESTON and the laboratory. The laboratory project manager coordinates bottle delivery to WESTON, coordinates sample delivery, and ensures that all analyses are performed and results are delivered on time.	B.S. Biological Sciences; 24 years environmental lab experience B.S. Biology; 12 years of environmental lab experience

Notes:
FSS – Field Services Section
OSC – On-Scene Coordinator
QA – Quality Assurance
QAPP – Quality Assurance Project Plan
U.S. EPA – United States Environmental Protection Agency

QAPP Worksheet #8
Special Personnel Training Requirements Table

Project Function	Specialized Training – Title or Description of Course	Training Provider	Training Date	Personnel/Groups Receiving Training	Personnel Titles/ Organizational Affiliation	Location of Training Records/Certificates[1]
Field Sampling Activities	40-Hour OSHA HAZWOPER Training and Recurrently Annual 8-hour refreshers	WESTON	Various	Field Team Leader and Field Team Members	WESTON Field Team: Lorie Ambrosio, Field Team Leader; Jody Dillon, Project Scientist; Kelly Hudson, Project Engineer; Andy Kiel, Project Scientist; Terrel Hankins, Project Scientist	WESTON's web-based EHS Track

Notes:
EHS – Environmental Health and Safety
HAZWOPER - Hazardous Waste Operations and Emergency Response Standard
OSHA – Occupational Safety and Health Administration
WESTON – Weston Solutions, Inc.

QAPP Worksheet #9A
Project Scoping Session Participants Sheet

Project Name: Tittabawassee River **Projected Date(s) of Sampling:** April 2008 **Project Manager:** Alex Clark, WESTON	**Site Name:** Tittabawassee River **Site Location**: Saginaw County, Michigan

Date of Session: February 20, 2008
Scoping Session Purpose: project background, overall scope of work, and immediate action items with schedule

Name	Title	Affiliation	Phone #	E-mail Address	Project Role
Alex Clark	Project Manager	WESTON	313-739-2533	A.Clark@WestonSolutions.com	Project manager
Dan Capone	START Deputy Program Manager	WESTON	517-381-5932	Dan.Capone@westonsolutions.com	Technical and logistical guidance
Natalie Wojdakowski	START Team Member	WESTON	847-918-4015	n.wojdakowski@westonsolutions.com	GIS technical guidance
Jeff Kimble	OSC	U.S. EPA	734-692-7688	kimble.jeffrey@epa.gov	OSC, overall project authority
Brian Schlieger	OSC	U.S. EPA	734-692-7681	schlieger.brian@epa.gov	OSC, assistance with background and scope

Comments/Decisions: Focus on high-priority properties/areas to target first for sampling. Develop individual sampling plans for each property. Dioxins/Furans are to be considered the only analytical need at this time. There are two overall objectives: 1) the nature and extent of contamination on individual properties and 2) the nature and extent of contamination throughout the floodplain.

Action Items: Immediate project planning needs including QAPP development; database creation; risk prioritization system; identify laboratories for dioxin/furan analysis; and determine approach for data management and mapping.

Consensus Decisions: _____

QAPP Worksheet #9B
Project Scoping Session Participants Sheet

Project Name: Tittabawassee River **Projected Date(s) of Sampling:** April 2008 **Project Manager:** Alex Clark, WESTON	**Site Name:** Tittabawassee River **Site Location**: Saginaw County, Michigan

Date of Session: February 25, 2008
Scoping Session Purpose: project background, overall scope of work, and immediate action items with schedule

Name	Title	Affiliation	Phone #	E-mail Address	Project Role
Alex Clark	Project Manager	WESTON	313-739-2533	A.Clark@WestonSolutions.com	Project manager
Jeff Kimble	OSC	U.S. EPA	734-692-7688	kimble.jeffrey@epa.gov	OSC, overall project authority
Brian Schlieger	OSC	U.S. EPA	734-692-7681	schlieger.brian@epa.gov	OSC, assistance with background and scope

Comments/Decisions: Potential Tier II priority homes were identified on Stroebel Street west of Center Street. Potential Tier I priority homes were identified on Stroebel Street east of Center Street.

Action Items: Insert data for all River areas (upper, middle, and lower) into database. Determine distance considerations for data gaps.

Consensus Decisions:_____

QAPP Worksheet #9C
Project Scoping Session Participants Sheet

Project Name: Tittabawassee River **Projected Date(s) of Sampling:** April 2008 **Project Manager:** Alex Clark, WESTON	**Site Name:** Tittabawassee River **Site Location**: Saginaw County, Michigan

Date of Session: February 28, 2008
Scoping Session Purpose: multi-agency meeting to discuss site background, data, QAPP, technical approach, and DQOs

Name	Title	Affiliation	Phone #	E-mail Address	Project Role
Alex Clark	Project Manager	WESTON	313-739-2533	A.Clark@WestonSolutions.com	Project manager
Dan Capone	START Deputy Project Manager	WESTON	517-381-5932	Dan.Capone@westonsolutions.com	Technical and logistical guidance
Jeff Kimble	OSC	U.S. EPA	734-692-7688	kimble.jeffrey@epa.gov	OSC, overall project authority
Brian Schlieger	OSC	U.S. EPA	734-692-7681	schlieger.brian@epa.gov	OSC, assist with background / scope
Cheryl Howe		MDEQ-WHMD	517-373-9881	howec@michigan.gov	
Greg Rudloff		U.S. EPA RCRA	312-886-0445	Rudloff.gregory@epa.gov	
Al Taylor		MDEQ-WHMD	517-335-4799	taylora@michigan.gov	
Deb MacKenzie-Taylor		MDEQ-WHMD	517-335-4715	Mackenzie-taylord@michigan.gov	
De Montgomery		MDEQ-WHMD	517-373-7973	montgomeryd@michigan.gov	
Linda Dykema		MDCH	517-335-8566	dykemal@michigan.gov	
Trisha Peters		MDEQ-WHMD	989-686-8025	peterst@michigan.gov	
Kory Groetsch		MDCH	517-335-9935	groetschk@michigan.gov	
Mark Durno		U.S. EPA	440-250-1743	Durno.mark@epa.gov	

Comments/Decisions: MDEQ would like exposure-unit approach sampling to be carried to agricultural properties. MDEQ indicated dioxin/furan contamination was detected as deep as between 6 and 17 feet below ground surface within the floodplain in some locations. Approximately six miles of the lower River has yet to be investigated. Nilfisk® indoor dust collection samples collected by MDEQ/MDCH focused on two areas of the home including 1) the most frequently-used entry way and 2) the most used living space.

Action Items: Incorporate indoor dust sampling protocols into QAPP. MDEQ to share GIS information with U.S. EPA/WESTON. MDCH to provide Nilfisk® sampling protocols to WESTON. MDEQ to provide U.S. EPA with property ownership information.

Consensus Decisions: Current priority is to determine the dioxin/furan contamination present in shallow soils that can pose a risk to human health. A 1,000 parts per trillion (ppt) threshold will be acceptable for determining the need for an Interim Response Action (exposure reduction) on a property/area. Use of exposure unit approach to determine risk on properties – use of Visual Sampling Plan will be acceptable for the exposure unit approach. Focus for sampling will be on highest priority properties/areas first – these include the Riverside Blvd. neighborhood and the West Michigan Park Area. MDEQ will research/prioritize additional properties to provide to U.S. EPA. U.S. EPA will evaluate conducting indoor dust sampling in addition to outdoor soil/sediment sampling on properties where a house is located and results of indoor dust samples would be compared to outdoor soil samples to determine if a correlation exists. Some biased sampling or allowance for biased sampling will be incorporated into the sampling plans/strategy.

QAPP Worksheet #10
Problem Definition

The problem to be addressed by the project: The Dow Chemical Company Midland Plant (the Plant) is located on the Tittabawassee River at 1000 East Main Street, Midland, Michigan. The Plant has been in operation since 1897 and produced over 1,000 various inorganic and organic chemicals. Since 1930, the Plant has manufactured 24 chlorophenolic compounds. Early in the Plant's history, wastes were discharged directly to the Tittabawassee River. At a later date, wastes were stored and treated in ponds, disposed of on the land, or burned. Later changes in waste management practices included the installation of a modern waste water treatment plant and the installation of incinerators.

Elevated dioxin and furan concentrations exist in sediments and floodplain soils along the Tittabawassee River due primarily to brine electrolysis for chlorine manufacturing and the historical waste management practices at the Plant. In addition, flooding at the Plant property resulted in discharges of stored brines and process wastewaters to the Tittabawassee River. Because of the known dioxin and furan contamination in sediments of the Tittabawassee River, residential, recreational, and agricultural areas within the floodplain of the Tittabawassee River are to be evaluated to determine risks posed to human health and the environment. The first priority is to evaluate residential areas starting with the Riverside Blvd Neighborhood (located approximately 20 miles downstream of the Plant where the Tittabawassee River meets the Saginaw River) and the West Michigan Park Area (located approximately 17 miles downstream of the Plant). Elevated concentrations of dioxin have been detected in these areas during sampling efforts conducted by Dow. The Riverside Blvd Neighborhood and West Michigan Park Area are considered Tier 1 priorities. Additional Tier 1 and Tier 2 priorities will be identified and will subsequently be sampled. All properties to be evaluated will be prioritized based on their land use. Each property will be evaluated individually as an exposure unit and each area (for example, the West Michigan Park area) will be evaluated as a single exposure unit. A secondary objective is to evaluate the horizontal and vertical extent of dioxin/furan contamination throughout the floodplain area. Initially, surface soils will be evaluated at 0 to 1 foot below ground surface (bgs). However, based on findings, further investigation to greater soil depths may occur. In addition, dust samples and/or wipe samples may be collected from inside the homes to evaluate if dioxin contamination via soil tracking or flooding is migrating from outside to inside the homes.

A project background map is provided at the end of this worksheet for reference.

The environmental questions being asked: Do dioxin and furan compounds in the soil of residential, recreational, and agricultural properties within the floodplain of the Tittabawassee River pose a risk to human health and the environment?

Do dust and/or wipe samples collected from inside homes correlate with dioxin and furan concentrations to those in the soil collected outside the home indicating migration and/or tracking of contaminants from outdoors to indoors?

The possible classes of contaminants and the affected matrices: Dioxins and furans in soil and dust are the contaminant of concern for the Tittabawassee River floodplain sampling.

The rationale for inclusion of chemical and non-chemical analyses: Dioxin and furans are known to be present at elevated levels in the sediment of the Tittabawassee River beginning at the Plant and downstream of the plant. In addition, some limited sampling conducted by Dow indicates that the floodplain soils are contaminated with dioxins and furans along the Tittabawassee River.

Project decision conditions ("If..., then..." statements):

If dioxin and furans in soil exceed the total dioxin and furan Toxic Equivalent (TEQ) criteria of 1,000 parts per trillion (ppt), then the need for exposure reduction will be evaluated on that property or exposure unit.

If dioxin and furans in soil **do not** exceed the total dioxin and furan TEQ criteria of 1,000 ppt, then the property will be evaluated for future monitoring.

If dioxin and furans in dust inside homes is found to correlate with dioxin and furan concentrations soil outside the home, then the need for exposure reduction will be evaluated for that home.

If dioxin and furans in dust inside homes is not found or is found **not** to correlate to dioxin and furan concentrations soil outside the home, then the property will be evaluated for future monitoring.

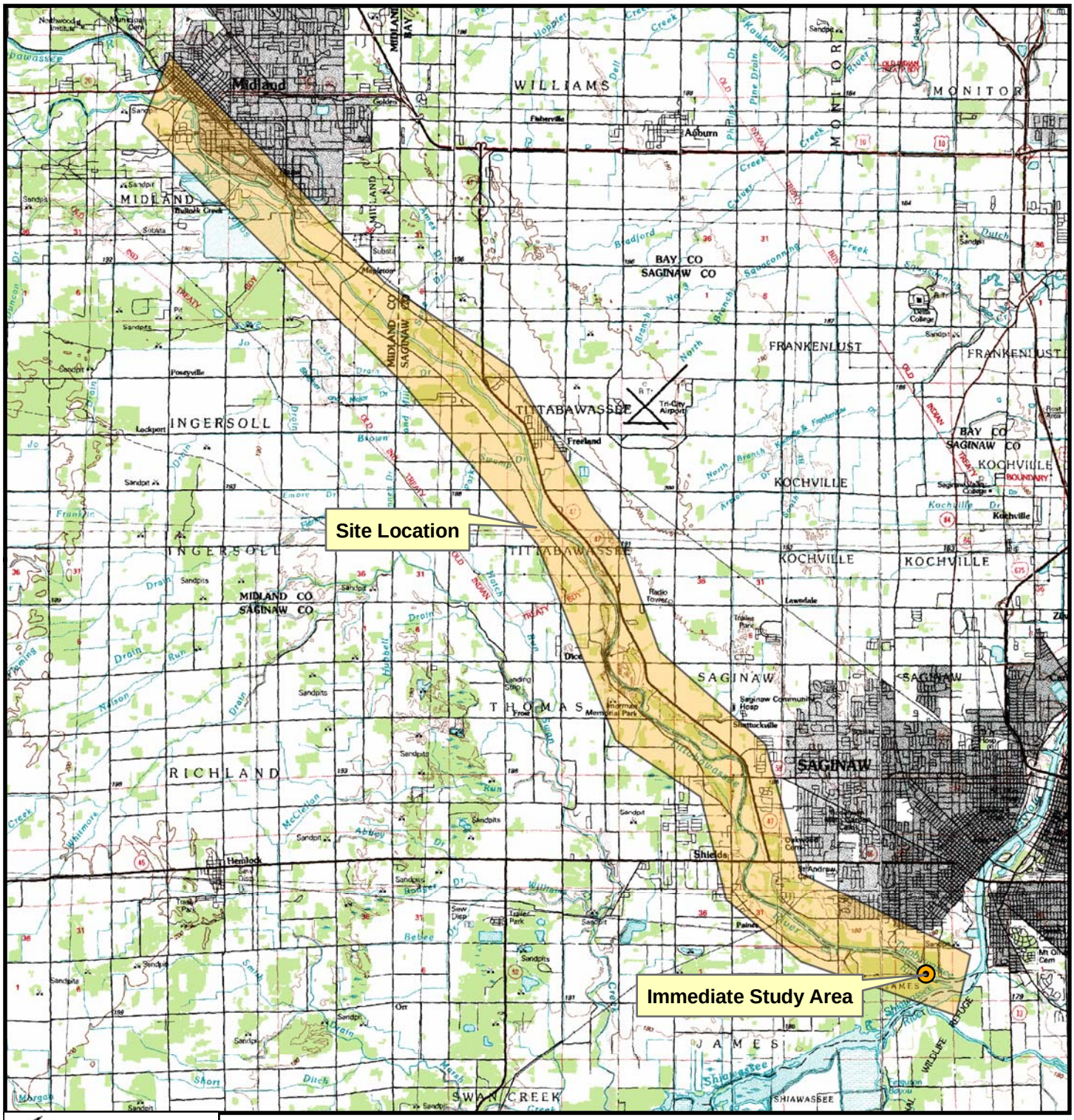

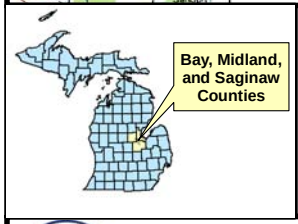

Street Map Source: ESRI ArcGIS Map Service

N
W E
S

0 1.25 2.5
Miles

Figure 1

Prepared for:
U.S. EPA REGION V
Contract No: EP-S5-06-04

TDD No.: S05-0012-0802-011
DCN: 390-2E-ABOL

Prepared by:
WESTON SOLUTIONS, INC.
7800 W. Outer Drive, Suite 200
Detroit, MI 48235

Site Location Map
Residential Floodplain Sampling
Saginaw, Michigan

File: D:\GIS_Projects\START\Tittabawassee\mxds\Draft Figures\Fig 1 Site_Location.mxd, 21-Mar-08 17:11, BROWNK

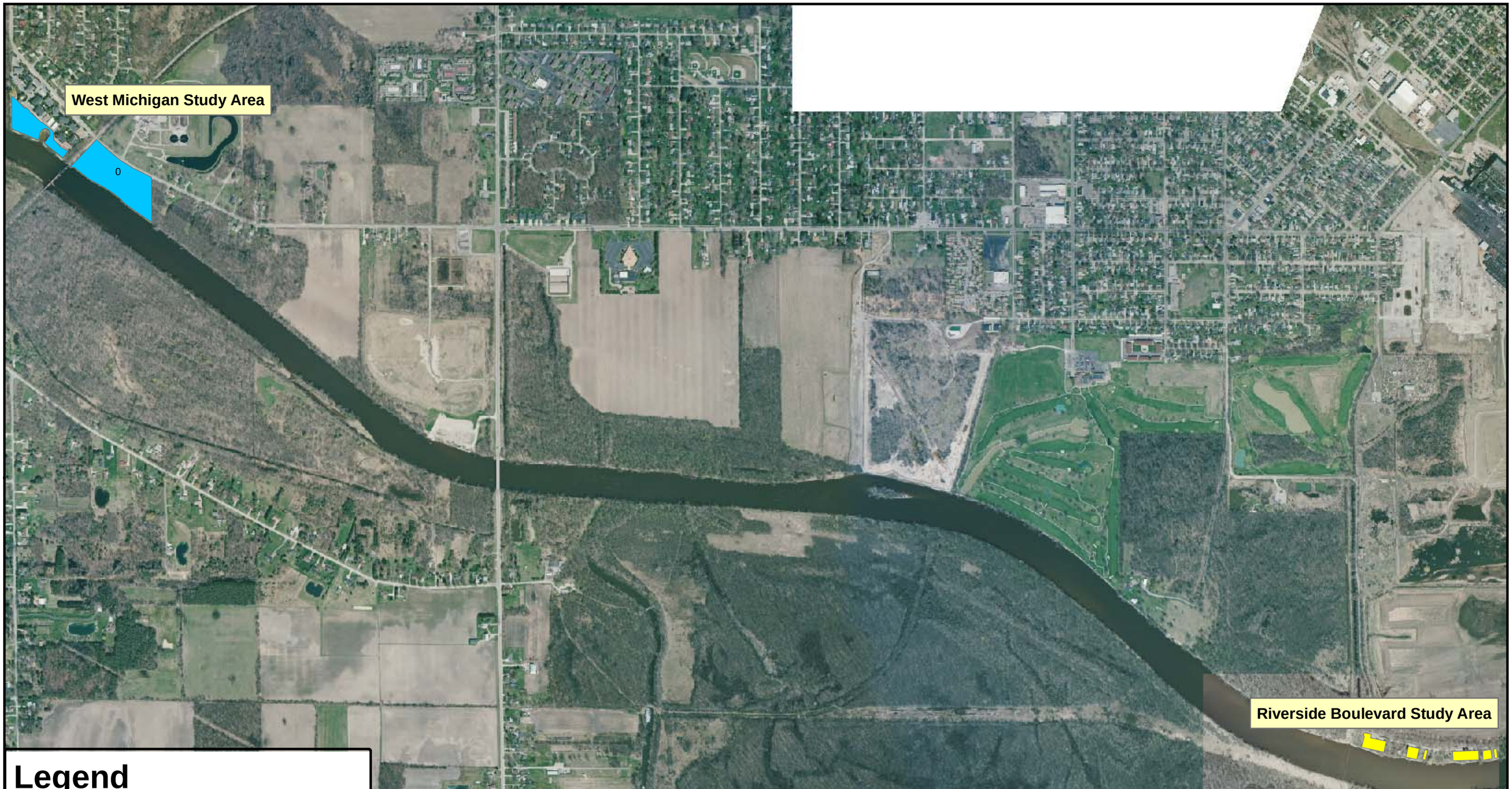

Legend

West Michigan Study Area

Riverside Boulevard Study Area

N

Feet

0 500 1,000

Prepared for:
U.S. EPA. REGION V

Contract No: EP-S5-06-04
TDD: S05-0012-0802-011
DCN:390-2E-ABOL

Prepared By:

Weston Solutions, Inc.
750 E. Bunker Ct. Suite 500
Vernon Hills, IL 60061

Figure 2
Immediate Study Area Location Map
Residential Floodplain Sampling
Saginaw, Michigan

File: D:\T_River_Floodplain\mxd\Reach_xxyy_lower.mxd, 17-Mar-08 14:42, mullinm

QAPP Worksheet #11
Project Quality Objectives/Systematic Planning Process Statements

Who will use the data? The data will be used by U.S. EPA Region 5, MDEQ, and MDCH to determine if there is a risk to human health and the environment posed by dioxin and furans in the floodplain soils of the Tittabawassee River or in dust samples collected from inside residential homes.

What will the data be used for? Soil results will be compared to the screening level criteria of 1,000 ppt total TEQ for dioxins and furans. If this level is exceeded in residential floodplain soils, then the need for exposure reduction will be evaluated. Data from the dust and/or wipe samples will be used to evaluate if dioxin and furan contaminated soil from outside residential homes has migrated or has been tracked to inside the homes within the floodplain of the Tittabawassee River downstream from the Plant. If, based on the results of the dust samples, the U.S. EPA determines that dioxins and furans have migrated or have been tracked inside the homes, then exposure reduction will be evaluated.

What type of data are needed? (target analytes, analytical groups, field screening, on-site analytical or off-site laboratory techniques, sampling techniques) The analytical data needed are the seventeen chlorinated dibenzo-p-dioxins and chlorinated dibenzofurans identified by the World Health Organization in *The World Health Organization Re-evaluation of Human and Mammalian Toxic Equivalency Factors for Dixons and Dioxin-like compounds*, expressed as toxic equivalence concentrations as listed below:

- 2,3,7,8-Tetrachlorodibenzo-p-dioxin (TCDD)
- 1,2,3,7,8-Pentachlorodibenzo-p-dioxin (PeCDD)
- 1,2,3,6,7,8-Hexachlorodibenzo-p-dioxin (HxCDD)
- 1,2,3,4,7,8-Hexachlorodibenzo-p-dioxin (HxCDD)
- 1,2,3,7,8,9-Hexachlorodibenzo-p-dioxin (HxCDD)
- 1,2,3,4,6,7,8-Heptachlorodibenzo-p-dioxin (HpCDD)
- 1,2,3,4,6,7,8,9-Octachlorodibenzo-p-dioxin (OCDD)
- 2,3,7,8-Tetrachlorodibenzofuran (TCDF)
- 1,2,3,7,8-Pentachlorodibenzofuran (PeCDF)
- 2,3,4,7,8-Pentachlorodibenzofuran (PeCDF)

- 1,2,3,6,7,8-Hexachlorodibenzofuran (HxCDF)
- 1,2,3,7,8,9-Hexachlorodibenzofuran (HxCDF)
- 1,2,3,4,7,8-Hexachlorodibenzofuran (HxCDF)
- 2,3,4,6,7,8-Hexachlorodibenzofuran (HxCDF)
- 1,2,3,4,6,7,8-Heptachlorodibenzofuran (HpCDF)
- 1,2,3,4,7,8,9-Heptachlorodibenzofuran (HpCDF)
- 1,2,3,4,6,7,8,9-Octachlorodibenzofuran (OCDF)

The individual dioxins and furan congener concentrations will be assessed through off-site laboratory analyses of soil and dust/wipe samples collected by START using a toxicity equivalency factor (TEF) which is an estimate of the relative toxicity of the compounds to TCDD. The individual dioxin and furan congener concentrations are converted to a TEQ concentration using the TEF. The individual TEQ concentrations will be added together to determine a total TEQ concentration of the dioxins and furan compounds in the sample.

How "good" do the data need to be in order to support the environmental decision? The analytical reporting limits should be at 10 ppt for the individual dioxin and furans. Additionally, the quality control (QC) criteria of the selected analytical method must be met or the data qualified appropriately if the QC criteria are not met. Specific measurement performance criteria are listed in Worksheet 11.

How much data are needed? (number of samples for each analytical group, matrix, and concentration) This is to be determined during the sampling design process. A statistical exposure unit sampling approach will be used for the sample design process.

Where, when, and how should the data be collected/generated? The data will be collected at residential, recreational, and agricultural properties within the floodplain of the Tittabawassee River downstream from the Plant. The first priority is to evaluate residential areas starting with the Riverside Blvd Neighborhood (located approximately 20 miles downstream of the Plant where the Tittabawassee River meets the Saginaw River) and the West Michigan Park Area (located approximately 17 miles downstream of the Plant). The sampling is expected to begin in March/April 2008. All data will be collected in accordance with individual parcel or area Sampling and Analysis Plans (SAP) to be developed by START.

Who will collect and generate the data? Weston Solutions, Inc., Superfund Technical Assessment and Response Team (START) contractor to U.S. EPA Region 5 will collect all samples and a subcontracted off-site analytical laboratory (to be determined) will analyze the samples.

How will the data be reported? The laboratory will initially submit a summary report to WESTON by email. This will be shared with the U.S. EPA Region 5 OSC but will not be distributed further until the final analytical data package is received from the laboratory and the data has been appropriately validated. The validated data then will be sent to the OSC who will further distribute it to the MDEQ, MDCH, and other interested parties. The validated data will be continually incorporated into a project database for additional reporting.

How will the data be archived? WESTON will maintain a copy of all site-related data and files for a period of 10 years in accordance with its policies and the START III Contract. In addition, WESTON will give a copy of all data to the OSC who will archive the data in the U.S. EPA's records center.

QAPP Worksheet #12A - TestAmerica Laboratories, Inc., West Sacramento, California
Measurement Performance Criteria Table

Matrix	Solid
Analytical Group[1]	Dioxins and Furans
Concentration Level	Low

Sampling Procedure[2]	**Analytical Method/SOP[3]**	**Data Quality Indicators (DQIs)**	**Measurement Performance Criteria**	**QC Sample and/or Activity Used to Assess Measurement Performance**	**QC Sample Assesses Error for Sampling (S), Analytical (A) or both (S&A)**
WSOP-1, 2, and 6	WS-ID-0007	Precision – Lab	RPD ≤ 25%	Laboratory Duplicates	A
		Precision - Overall	RPD ≤ 25% (lab) RPD ≤ 50% (sampling)	Field Duplicates	S+A
		Accuracy/Bias	Varies – see Worksheet #28	Internal Standard Control Limits	A
		Accuracy/Bias	No false negatives, No false positives, Quantitation Limit within warning limits (± 50%)	Single-Blind Performance Evaluation Sample	A
		Accuracy/Bias	No target compounds ≥ Quantitation Limit	Method Blanks, Instrument Blanks	A
		Sensitivity	± 40% at Quantitation Limit	Laboratory Fortified Blank at Quantitation Limit	A

Notes:

[1]If information varies within an analytical group, separate by individual analyte.
[2]Reference number from QAPP Worksheet #21 (see Section 3.1.2).
RPD – relative percent difference
[3]Reference number from QAPP Worksheet #23 (section 3.2)

QAPP Worksheet #12B - Pace Analytical Services, Inc., Minneapolis, Minnesota
Measurement Performance Criteria Table

Matrix	Solid
Analytical Group[1]	Dioxins and Furans
Concentration Level	Low

Sampling Procedure[2]	**Analytical Method/SOP[3]**	**Data Quality Indicators (DQIs)**	**Measurement Performance Criteria**	**QC Sample and/or Activity Used to Assess Measurement Performance**	**QC Sample Assesses Error for Sampling (S), Analytical (A) or both (S&A)**
WSOP-1, 2, and 6	S-MN-H-002	Precision – Lab	RPD $\leq$ 20%	Laboratory Duplicates	A
		Precision - Overall	RPD $\leq$ 25% (lab) RPD $\leq$ 50% (sampling)	Field Duplicates	S+A
		Accuracy/Bias	Varies – see Worksheet #28	Internal Standard Control Limits	A
		Accuracy/Bias	No false negatives, No false positives, Quantitation Limit within warning limits ($\pm$ 50%)	Single-Blind Performance Evaluation Sample	A
		Accuracy/Bias	No target compounds $\geq$ Quantitation Limit	Method Blanks, Instrument Blanks	A
		Sensitivity	$\pm$ 40% at Quantitation Limit	Laboratory Fortified Blank at Quantitation Limit	A

Notes:

[1]If information varies within an analytical group, separate by individual analyte.
[2]Reference number from QAPP Worksheet #21 (see Section 3.1.2).
RPD – relative percent difference
[3]Reference number from QAPP Worksheet #23 (section 3.2)

QAPP Worksheet #13
Secondary Data Criteria and Limitations Table

Secondary Data	Data Source (Originating Organization, Report Title, and Date)	Data Generator(s) (Originating Org., Data Types, Data Generation/Collection Dates)	How Data Will Be Used	Limitations on Data Use
Dow Chemical produced data	Dow Chemical	TBD	Data will be used to assess sampling design rationale to help focus the priorities for assessment of the floodplain	Data will be used to support sampling design rationale only and not for final remedial approach. Data quality and DQOs associated with the data sets are unknown.
MDEQ and/or MDCH produced data	MDEQ and/or MDCH	TBD	Data will be used to assess sampling design rationale to help focus the priorities for assessment of the floodplain	Data will be used to support sampling design rationale only and not for final remedial approach. Data quality and DQOs associated with the data sets are unknown.
MDEQ site background information	MDEQ	TBD	Site background information will be used to get an overall description of the Site.	Data will be used to support sampling design rationale only and not for final remedial approach. Data quality and DQOs associated with the data sets are unknown.

Notes:
MDEQ – Michigan Department of Environmental Quality
MDCH – Michigan Department of Community Health
TBD – to be determined

QAPP Worksheet #14
Summary of Project Tasks

Sampling Tasks:
1. Soil (shallow and possible deeper) sample collection
2. GPS data collection of soil locations
3. Collection of an Equipment Blank sample daily when using non-disposable equipment.
4. Potential dust sample and/or wipe sample collection inside homes
5. Written, electronic, and photo documentation

Analysis Tasks:
1. Subcontracted laboratory will prepare and process soil, dust, and wipe samples for dioxin/furan analyses in conjunction with their SOPs for U.S. EPA Method 1613B.

Quality Control Tasks:
1. Collect field duplicate samples per QAPP Worksheet #20.
2. Perform sample collection and decontamination procedures per SOPs.
3. Collect equipment blanks when using non-disposable equipment.
4. Laboratory to perform laboratory QC procedures per their SOP and this QAPP. QC procedures include analyzing blanks, laboratory control sample, and matrix spike/matrix spike duplicate samples.
5. Submit performance evaluation samples to the laboratories at a frequency of approximately 1 per 3 months for analysis.

Secondary Data:
Not applicable.

Data Management Tasks:.
Sample information and analytical data will be placed in a SCRIBE database following collection of samples and receipt of data. Additionally, WESTON will be using Response Manager to manage the overall project information and the SCRIBE information will be synchronized into the overall Response Manager database. The Response Manager information will be continually updated and available online to those who have access.

Documentation and Records:
Soil samples will have GPS locations documented and all sample collection data will be recorded in the Response Manager database and field logbooks. COCs,

airbills, and sample logs will be prepared and retained for each sample. A copy of all finalized documents and analytical data will be retained in a central file area.

Assessment/Audit Tasks:
Assessment of field activities will be carried out as described in Worksheet #31. Additional audits will be carried out as directed and approved by the OSC.

Data Review Tasks:

The laboratory will review all analytical data for completeness and quality prior to submitting a final data package to WESTON. This will be accomplished in accordance with the laboratories quality management plan and internal policies. A case narrative describing any quality control issues with the analyses will be submitted with the final data report. In addition, the laboratory will qualify data in accordance with its quality policies.

The WESTON Data Validator or qualified alternate will validate the final data package after receipt from the laboratory. The data validation will be conducted in general accordance with the *U.S. EPA Contract Laboratory Program National Functional Guidelines for Chlorinated Dioxin/Furan Data Review* dated September 2005, along with the laboratory specific SOPs, and guidance provided in this project specific QAPP.

Notes:
GPS – Global Positioning System
OSC – On-Scene Coordinator
QAPP – Quality Assurance Project Plan
QC – Quality Control
SOP – Standard Operating Procedure
U.S. EPA – United States Environmental Protection Agency
WESTON – Weston Solutions, Inc.

QAPP Worksheet #15A – TestAmerica Laboratories, Inc., West Sacramento, California
Reference Limits and Evaluation Table

Worksheet : 15A
Analytical Group: EPA 1613B
SOP Reference: SAC-ID-0007
Matrix: Solid

Chemical	CAS Number	Project Action Limit (ng/kg)[1]	Project Action Limit Reference	Project Quantitation Limit Goal (µg/kg)[1]	Laboratory-Specific	
					QLs (ng/kg)	MDLs[1]
2,3,7,8-TCDF	51207-31-9	1,000 TEQ			1	0.25
2,3,7,8-TCDD	1746-01-6	1,000 TEQ			1	0.28
1,2,3,7,8-PeCDF	57117-41-6	1,000 TEQ			5	0.39
2,3,4,7,8-PeCDF	57117-31-4	1,000 TEQ			5	0.26
1,2,3,7,8-PeCDD	40321-76-4	1,000 TEQ			5	0.38
1,2,3,4,7,8-HxCDF	70648-26-9	1,000 TEQ			5	0.51
1,2,3,6,7,8-HxCDF	57117-44-9	1,000 TEQ			5	0.76
2,3,4,6,7,8-HxCDF	60851-34-5	1,000 TEQ			5	0.62
1,2,3,7,8,9-HxCDF	72918-21-9	1,000 TEQ			5	0.69
1,2,3,4,7,8-HxCDD	39227-28-6	1,000 TEQ			5	0.52
1,2,3,6,7,8-HxCDD	57653-85-7	1,000 TEQ			5	0.59
1,2,3,7,8,9-HxCDD	19408-74-3	1,000 TEQ			5	0.69
1,2,3,4,6,7,8-HpCDF	67562-39-4	1,000 TEQ			5	0.52
1,2,3,4,7,8,9-HpCDF	55673-89-7	1,000 TEQ			5	0.63
1,2,3,4,6,7,8-HpCDD	35822-46-9	1,000 TEQ			5	0.61
OCDF	39001-02-0	1,000 TEQ			10	0.81
OCDD	3268-87-9	1,000 TEQ			10	2.74

QAPP Worksheet #15A – TestAmerica Laboratories, Inc., West Sacramento, California
Reference Limits and Evaluation Table (Continued)

Notes:
1 Estimated Detection Limit (EDL) - For each chemical not detected, an EDL can be reported. The sample specific EDL is an estimate made by the laboratory of the concentration of a given chemical that would have to be present to produce a signal with a peak height of at least 2.5 times the background signal level. The estimate is specific to a particular analysis of the sample and will be affected by sample size, dilution, and so forth. Because of the toxicological significance of dioxins, the EDL value can be reported for nondetected chemicals rather than reporting the QL.

[1]Analytical MDLs and QLs are those documented in validated methods.
[2]Achievable MDLs and QLs are limits that an individual laboratory can achieve when performing a specific analytical method.
Pg/g – picogram per gram
QL – quantitation limit
MDL – method detection limit
Ng/kg – nanograms per kilogram

QAPP Worksheet #15B – Pace Analytical Services, Inc., Minneapolis, Minnesota
Reference Limits and Evaluation Table

Table: 15B
Analytical Group: EPA 1613B
SOP Reference: S-MN-H-002-REV.08
Matrix: Solid

Chemical	CAS Number	Project Action Limit (ng/kg)[1]	Project Action Limit Reference	Project Quantitation Limit Goal (µg/kg)[1]	Laboratory-Specific	
					QLs (ng/kg)	MDLs[1]
2,3,7,8-TCDF	51207-31-9	1,000 TEQ			1.0	0.32
2,3,7,8-TCDD	1746-01-6	1,000 TEQ			1.0	0.20
1,2,3,7,8-PeCDF	57117-41-6	1,000 TEQ			5.0	0.52
2,3,4,7,8-PeCDF	57117-31-4	1,000 TEQ			5.0	0.56
1,2,3,7,8-PeCDD	40321-76-4	1,000 TEQ			5.0	0.59
1,2,3,4,7,8-HxCDF	70648-26-9	1,000 TEQ			5.0	0.42
1,2,3,6,7,8-HxCDF	57117-44-9	1,000 TEQ			5.0	0.29
2,3,4,6,7,8-HxCDF	60851-34-5	1,000 TEQ			5.0	0.60
1,2,3,7,8,9-HxCDF	72918-21-9	1,000 TEQ			5.0	0.85
1,2,3,4,7,8-HxCDD	39227-28-6	1,000 TEQ			5.0	0.59
1,2,3,6,7,8-HxCDD	57653-85-7	1,000 TEQ			5.0	0.43
1,2,3,7,8,9-HxCDD	19408-74-3	1,000 TEQ			5.0	0.74
1,2,3,4,6,7,8-HpCDF	67562-39-4	1,000 TEQ			5.0	0.43
1,2,3,4,7,8,9-HpCDF	55673-89-7	1,000 TEQ			5.0	0.57
1,2,3,4,6,7,8-HpCDD	35822-46-9	1,000 TEQ			5.0	0.59
OCDF	39001-02-0	1,000 TEQ			10	0.91
OCDD	3268-87-9	1,000 TEQ			10	2.06

QAPP Worksheet #15B – Pace Analytical Services, Inc., Minneapolis, Minnesota
Reference Limits and Evaluation Table (Continued)

Notes:
1 Estimated Detection Limit (EDL) - For each chemical not detected, an EDL can be reported. The sample specific EDL is an estimate made by the laboratory of the concentration of a given chemical that would have to be present to produce a signal with a peak height of at least 2.5 times the background signal level. The estimate is specific to a particular analysis of the sample and will be affected by sample size, dilution, and so forth. Because of the toxicological significance of dioxins, the EDL value can be reported for nondetected chemicals rather than reporting the QL.

Pg/g – picogram per gram
QL – quantitation limit
MDL – method detection limit
Ng/kg – nanograms per kilogram

QAPP Worksheet #16

Project Schedule/Timeline Table

Activities	Organization	Dates (MM/DD/YY)		Deliverable	Deliverable Due Date
		Anticipated Date(s) of Initiation	Anticipated Date of Completion		
SAP Preparation	WESTON	2/22/2008	On-going[1]	SAP	On-going[1]
QAPP Preparation	WESTON	2/22/2008	3/20/2008	QAPP	3/20/2008 for Draft
Soil and Dust Sampling	WESTON	4/1/2008	8/1/2008	Soil samples to laboratory	TBD
Laboratory Analysis	TBD	4/4/2008	9/1/2008	Laboratory Data Report	TBD
Data Validation	WESTON	4/28/2008	On-going[2]	Data Validation Report	TBD
Interim Usability Assessments	WESTON	5/5/08	On-going[2]	Property-specific Usability Assessment Reports	TBD
Final Project Report	WESTON	9/1/2008	12/31/2008	Final Report	TBD

Notes:
[1]The initial study area SAP for the Riverside Blvd Neighborhood and West Michigan Park Area are projected for completion by May 2, 2008.
[2]Data validation and usability assessments will occur as final data packages are received from the laboratory.
QAPP – Quality Assurance Project Plan
SAP – Sampling and Analysis Plan
TBD – To be determined
WESTON – Weston Solutions, Inc.

QAPP Worksheet #17
Sampling Design and Rationale

Describe and provide a rationale for choosing the sampling approach (e.g., grid system, biased statistical approach):

Because of the known dioxin and furan contamination in sediments of the Tittabawassee River and in some of the floodplain soils along the Tittabawassee River, residential, recreational, and agricultural areas within the floodplain of the Tittabawassee River are to be evaluated to determine risks posed to human health and the environment. The first priority is to evaluate residential areas starting with the Riverside Blvd Neighborhood (located approximately 20 miles downstream of the Plant where the Tittabawassee River meets the Saginaw River) and the West Michigan Park Area (located approximately 17 miles downstream of the Plant). All properties to be evaluated will be prioritized based on their land use. Each property will be evaluated individually as an exposure unit and each area (for example, the West Michigan Park area) will be evaluated as a single exposure unit. Initially, surface soils will be evaluated at 0 to 1 foot below ground surface. Deeper soil samples may be collected and archived for pending analysis following review of shallow soil sample results. A statistical sampling approach will be used for soil samples that allows for evaluation of exposure as well as the extent of contamination. The sample design will also allow for biased sampling, as necessary (i.e. gardens, etc.) if gridded areas do not fall into those areas of concern.

In addition, dust samples and/or wipe samples may be collected from inside the homes to evaluate if soil is migrating from outside to inside the homes. The sampling approach has been designed to collect dust samples and/or wipe samples in those areas of the home suspected to have the highest concentrations of dust. The purpose of the dust sampling is to be able to compare dioxin and furan results of dusts from inside the homes to that of soil from outside the homes.

Describe the sampling design and rationale in terms of what matrices will be sampled, what analytical groups will be analyzed and at what concentration levels, the sampling locations (including QC, critical, and background samples), the number of samples to be taken, and the sampling frequency (including seasonal considerations) [May refer to map or Worksheet #18 for details]:

Soil Sampling:
All soil sampling will be conducted in accordance with the exposure unit-specific or area specific SAPs and WESTON soil sampling SOPs (see worksheet #21). The Visual Sampling Plan (VSP) software will dictate the sample locations and layout according to the overall sampling objective (i.e. evaluating exposure risks and extent of contamination in targeted area). The sample location for each respective property will be overlaid on a geo-referenced aerial photograph and the coordinates for each sample location will be provided. The field team will locate the sampling location per the VSP output using a GPS unit. Once all sampling locations are flagged the field team will proceed with sample collection. A manual sampler or Geoprobe will be used to collect the upper 36 inches of soil into disposable plastic sleeves. The soil retrieved from respective sampling intervals will be placed in a stainless steel mixing bowl or disposable pie tin and will be thoroughly homogenized. A laboratory-provided sample jar will then be filled with the homogenized sample material. Each sample location will be a discreet sample with no composite sampling between locations occurring. Deeper investigative soil samples will also be collected. It

is anticipated deeper soil samples may be collected from the 18 to 24 inch interval and the 30 to 36 inch interval.

Dust Sampling using a Nilfisk® GS-80 Vacuum Cleaner For Two Locations Within Each Home:
Two indoor floor dust samples will be collected from inside each home following the U.S. EPA SOP for Using a Nilfisk® GS-80 Vacuum Cleaner (EPA 2000). A Nilfisk® vacuum equipped with a HEPA filter will be used to vacuum the marked area. A minimum of 10 grams of dust is needed to yield an analytical detection limit of 10 ppt or ng/kg. If the sample bag does not appear to have collected enough dust from the square-meter area, then another adjacent square-meter area will be vacuumed. The surface vacuumed can include wood, tile, carpet, etc. Both the surface type and the total area of sample collection will be recorded. One sample will be collected from the entryway used most often. The other sample will be collected from an area where the resident(s) spends the bulk of their time. A square-meter will be measured and marked using masking tape. The protocol for indoor dust sampling is provided in WSOP-2. Dust samples will be analyzed at the WESTON-procured subcontracted laboratory.

If indoor dust sampling is necessary for non-carpeted areas, wipe samples may be substituted for dust sample collection using the Nilfisk Vacuum. A one meter square area will be measured and four wipes preserved in hexane will be collected from within the measured area to form one sample.

Both the soil and dust/wipe samples will be analyzed for dioxin an furans utilizing U.S. EPA Method 1613B. Field QC samples will be collected in accordance with worksheet #20.

Notes:
GPS – Global Positioning System
HEPA - High-Efficiency Particulate Air
ng/kg – nanogram per kilogram
ppt – Part per trillion
QC – Quality Control
SOP – Standard Operating Procedure
START – Superfund Technical Assessment and Response Team
U.S. EPA – United States Environmental Protection Agency
WESTON – Weston Solutions, Inc.

QAPP Worksheet #18
Sampling Locations and Methods/SOP Requirements Table

Sampling Location/ID Number	Matrix	Depth (feet)	Analytical Group	Concentration Level	Number of Samples (identify field duplicates) [1]	Sampling SOP Reference[2]	Rationale for Sampling Location
Riverside Blvd Neighborhood	Soil	0 to 1;18 to 24; 30-36	dioxin and furans	Low	TBD	WSOP-1; WSOP-4	See worksheet #17
Riverside Blvd Neighborhood	Dust	NA	dioxin and furans	Low	TBD	WSOP-2; WSOP-7	See worksheet #17
West Michigan Park Area	Soil	0 to 1;18 to 24; 30-36	dioxin and furans	Low	TBD	WSOP-1; WSOP-4	See worksheet #17
West Michigan Park Area	Dust	NA	dioxin and furans	Low	TBD	WSOP-2; WSOP-7	See worksheet #17
Other Tier 1 Priority Properties TBD	Soil	0 to 1;18 to 24; 30-36	dioxin and furans	Low	TBD	WSOP-1; WSOP-4	See worksheet #17
Other Tier 1 Priority Properties TBD	Dust	NA	dioxin and furans	Low	TBD	WSOP-2; WSOP-7	See worksheet #17
Other Tier 2 Priority Properties TBD	Soil	0 to 1;18 to 24; 30-36	dioxin and furans	Low	TBD	WSOP-1; WSOP-4	See worksheet #17
Other Tier 2 Priority Properties TBD	Dust	NA	dioxin and furans	Low	TBD	WSOP-2; WSOP-7	See worksheet #17

Notes:
[1]The specific number of samples and field duplicates will be defined in each individual sampling and analysis plan.
[2]Specify the appropriate letter or number from the Project Sampling SOP References table (Worksheet #21).
NA – Not Applicable
SOP- Standard Operating Procedure
TBD – To Be Determined

QAPP Worksheet #19A – TestAmerica Laboratories, Inc., West Sacramento, California
Analytical SOP Requirements Table

Worksheet: 19A
Analytical Group: EPA 1613B

Matrix	Analytical Group	Analytical and Preparation Method / SOP Reference	Containers (number, size, and type)	Sample volume (units)	Preservation Requirements (chemical, temperature, light protected)	Maximum Holding Time (preparation / analysis)
Soil	Dioxin (EPA 1613B)	WS-ID-0007	1-8 oz jar	8 oz	Cool, 4+/- 2˚ C	365 days/40 days
AQ	Dioxin (EPA 1613B)	WS-ID-0007	2-1 L AGB	1 L	Cool, 4+/- 2˚ C	365 days/40 days
Dust	Dioxin (EPA 1613B)	WS-ID-0007	Various	Various	Cool, 4+/- 2˚ C	365 days/40 days
Wipe	Dioxin (EPA 1613B)	WS-ID-0007	1 wipe per jar	4 wipes	Hexane; Cool, 4+/- 2˚ C	365 days/40 days

AQ – note aqueous samples are anticipated for equipment blanks for QC purposes only and there are no Project Quality Objectives for aqueous samples.
AGB – amber glass bottles
ºC – degrees Celsius
L - liter

QAPP Worksheet #19B – Pace Analytical Services, Inc., Minneapolis, Minnesota
Analytical SOP Requirements Table

Worksheet: 19B
Analytical Group: EPA 1613B

Matrix	Analytical Group	Analytical and Preparation Method / SOP Reference	Containers (number, size, and type)	Sample volume (units)	Preservation Requirements (chemical, temperature, light protected)	Maximum Holding Time (preparation / analysis)
Soil	Dioxin (EPA 1613B)	S-MN-H-002	8 oz glass jar	10 g dry weight; dry weight dependent	Cool, 4+/- 2˚ C	365 days/40 days
AQ	Dioxin (EPA 1613B)	S-MN-H-002	1L glass amber	1000 mL	Cool, 4+/- 2˚ C	365 days/40 days
Dust	Dioxin (EPA 1613B)	S-MN-H-002	Various	Various	Cool, 4+/- 2˚ C	365 days/40 days
Wipe	Dioxin (EPA 1613B)	S-MN-H-002	1 wipe per jar	4 wipes	Hexane; Cool, 4+/- 2˚ C	365 days/40 days

AQ – note aqueous samples are anticipated for equipment blanks for QC purposes only and there are no Project Quality Objectives for aqueous samples.
ºC – degrees Celsius
L – liter
mL - milliliters

QAPP Worksheet #20
Field Quality Control Sample Summary Table

Matrix	Analytical Group	Concentration Level	Analytical and Preparation SOP Reference[1]	No. of Sampling Locations[2]	No. of Field Duplicate Pairs	Inorganic No. of MS	No. of Field Blanks	No. of Equip. Blanks	No. of PT Samples	Total No. of Samples to Lab
Soil	Dioxin and Furans	Low	S-MN-H-002; WS-ID-0007	TBD	1 per 10 investigative	1 per batch	NA	1 per day[3]	6-8	TBD
Dust	Dioxin and Furans	Low	S-MN-H-002; WS-ID-0007	TBD	NA	NA	NA	1 per area	NA	TBD
Wipe	Dioxin and Furans	Low	S-MN-H-002; WS-ID-0007	TBD	NA	NA	NA	NA	NA	TBD

Notes:
[1]Specify the appropriate reference letter or number from the Analytical SOP References table (Worksheet #23).
[2]If samples will be collected at different depths at the same location, count each discrete sampling depth as a separate sampling location or station.
[3]Aqueous samples will be collected for the equipment blanks using Analytical and Preparation SOP References S-MN-H-002 and WS-ID-0007.
MS – Matrix Spike
NA – Not applicable
SOP – Standard Operating Procedure
TBD – To be determined

QAPP Worksheet #21
Project Sampling SOP References Table

Reference Number	Title, Revision Date and/or Number	Originating Organization	Equipment Type	Modified for Project Work? (Y/N)	Comments
WSOP-1	Superfund Technical Assessment and Response Team, Surface Soil Sampling SOP	WESTON	Plastic sample scoops and pie tins	Y	Modifications include the ability to use different sampling equipment such as stainless steel trowels, spoons, stainless steel bowls, shovels and hand augers if needed
WSOP-2	Collection of Indoor Dust Samples from Carpeted Surfaces for Chemical Analysis Using a Nilfisk GS-80 Vacuum Cleaner	U.S. EPA	Nilfisk Model GS-80 vacuum cleaner	Y	This SOP will be revised as needed if other types of surfaces are sampled that are not mentioned in the SOP.
WSOP-3	Superfund Technical Assessment and Response Team, Logbook Documentation SOP	WESTON	NA	N	
WSOP-4	Superfund Technical Assessment and Response Team, Subsurface Soil Sampling SOP	WESTON	Stainless steel augers, trowels, shovels, Geoprobe with macrocore or manual core sampling	N	
WSOP-5	Model pDR-1000AN/1200, Personal DATARAM, Particulate Monitor Instruction Manual	Thermo Electron Corporation	Personal DataRAM	N	Manufacturer's Instruction Manual for the particulate monitor
WSOP -6	Superfund Technical Assessment and Response Team, Decontamination SOP	WESTON	Non-disposable sampling equipment (trowels, hand augers, shovels)	Y	An final methanol spray/wipe step will be implemented for non-disposable sampling equipment
WSOP-7	Superfund Technical Assessment and Response Team, Wipe Sampling SOP	WESTON	Laboratory-supplied wipe sampling kit	Y	Modifications include collecting from a one square meter area and using four wipes per area

Notes:
NA – Not Applicable SOP – Standard Operating Procedure WESTON – Weston Solutions, Inc.

QAPP Worksheet #22
Field Equipment Calibration, Maintenance, Testing, and Inspection Table

Field Equipment	Calibration Activity	Maintenance Activity	Testing Activity	Inspection Activity	Frequency	Acceptance Criteria	Corrective Action	Responsible Person	SOP Reference[1]
Personal DataRAM	Zero Only	Clean sensor as needed	NA	Look for dust on lamp	Calibration – daily	NA	Clean sensor as needed	Field Team Leader	WSOP-5

[1]Specify the appropriate reference letter or number from the Project Sampling SOP References table (Worksheet #21).

QAPP Worksheet #23A – TestAmerica Laboratories, Inc., West Sacramento, California
Analytical SOP References Table

Worksheet: 23A
Analytical Group: EPA 1613B

Laboratory SOP Number	Title, Revision Date, and Number	Definitive or Screening Data	Matrix and Analytical Group	Instrument	Organization Performing Analysis	Modified for Project Work? (Y/N)
WS-ID-0007	Analysis of Tetra- Through Octa Chlorinated Dioxins and Furans By Isotope Dilution HRGC/HRMS By Method 1613B	Definitive	Solid – 1613B	Department	TestAmerica Laboratories, Inc., Inc.	N
WS-ID-0007	Analysis of Tetra- Through Octa Chlorinated Dioxins and Furans By Isotope Dilution HRGC/HRMS By Method 1613B	Definitive	Aqueous – 1613B	Department	TestAmerica Laboratories, Inc., Inc.	N
WS-ID-0007	Analysis of Tetra- Through Octa Chlorinated Dioxins and Furans By Isotope Dilution HRGC/HRMS By Method 1613B	Definitive	Wipe – 1613B	Department	TestAmerica Laboratories, Inc., Inc.	N

HRGC - High-Resolution Gamma-Ray Chromatography
HRMS - High-Resolution Mass Spectroscopy
Note: Aqueous samples will be collected as equipment blanks for QC purposes only.

QAPP Worksheet #23B – Pace Analytical Services, Inc., Minneapolis, Minnesota
Analytical SOP References Table

Worksheet: 23B
Analytical Group: EPA 1613B

Laboratory SOP Number	Title, Revision Date, and Number	Definitive or Screening Data	Matrix and Analytical Group	Instrument	Organization Performing Analysis	Modified for Project Work? (Y/N)
S-MN-H-002	Analysis of Tetra- Through Octa Chlorinated Dioxins and Furans By Isotope Dilution HRGC/HRMS By Method 1613B	Definitive	Solids and Aqueous – 1613B	10HRMS05, 06, or 09	Pace Analytical Services, Inc.	N
S-MN-H-002	Analysis of Tetra- Through Octa Chlorinated Dioxins and Furans By Isotope Dilution HRGC/HRMS By Method 1613B	Definitive	Wipe – 1613B	10HRMS05, 06, or 09	Pace Analytical Services, Inc.	N

HRGC - High-Resolution Gamma-Ray Chromatography
HRMS - High-Resolution Mass Spectroscopy
Note: Aqueous samples will be collected as equipment blanks for QC purposes only.

QAPP Worksheet #24A – TestAmerica Laboratories, Inc., West Sacramento, California
Analytical Instrument Calibration Table

Worksheet: 24A
Analytical Group: EPA 1613B

Instrument	Calibration Procedure	Frequency of Calibration	Acceptance Criteria	Corrective Action (CA)	Person Responsible for CA	SOP Reference
EPA 1613B HRGC/HRMS	Tune (PFK)	Prior to sample analysis.	Resolving power ≥ 10,000 at m/z=304.9842 & m/z=380.9760 ± 5ppm of expected mass.	1) Retune instrument 2) Reanalyze PFK	Analyst	SAC-ID-0007
EPA 1613B HRGC/HRMS	Column Performance Check Solution (CPSM). Solution includes the Window Defining Mix.	Prior to 12 hrs of sample analysis.	Used to set retention times of first and last eluters. CPSM must have ≤ 25% valley resolution for 2,3,7,8-TCDD from the closest eluting analytes.	1) Readjust windows. 2) Evaluate system. 3) Perform maintenance. 4) Reanalyze CPSM. 5) No corrective action is necessary if 2,3,7,8-TCDD is not detected and the % valley is greater than 25%.	Analyst	SAC-ID-0007

HRGC - High-Resolution Gamma-Ray Chromatography ppm – parts per million
HRMS - High-Resolution Mass Spectroscopy

QAPP Worksheet #24A – TestAmerica Laboratories, Inc., West Sacramento, California
Analytical Instrument Calibration Table (Continued)

Worksheet:	24A					
Analytical Group:	EPA 1613B					
Instrument	**Calibration Procedure**	**Frequency of Calibration**	**Acceptance Criteria**	**Corrective Action (CA)**	**Person Responsible for CA**	**SOP Reference**
EPA 1613B HRGC/HRMS	5 point Initial Calibration (Multipoint ICAL)	Initially as required	1) Int. Std. = %RSD < 30% 2) Natives = %RSD < 20% 3) Retention times must be within -1 to +3 seconds of the labeled I.S. or 0.005 RRT units. 4) Ion ratios within limits specified in the SOP and S/N > 10:1.	1) Evaluate system. 2) Recalibrate. 3) If all criteria are met except #4 (ratio), evaluate impact, narrate and report if no impact is found.	Analyst	SAC-ID-0007
EPA 1613B HRGC/HRMS	Daily Continuing Calibration Verification Standard (CCV)	Once per 12 hours, prior to sample analysis and at the end of the analytical sequence.	1) Beginning CCV IS concentration: Method Specific Native concentration: Method Specific 2) Retention time must be within -1 to +3 seconds of labeled I.S. or 0.005 RRT units. 3) Ion ratios within limits specified in SOP and S/N > 10:1.	1) Evaluate system. 2) Evaluate data for usability. 3) Reanalyze (CCV). 4) Recalibrate (ICAL) as necessary.	Analyst	SAC-ID-0007

HRGC - High-Resolution Gamma-Ray Chromatography
HRMS - High-Resolution Mass Spectroscopy
ppm – parts per million
RSD – Relative Standard Deviation
RRT – Relative Retention Time
SOP – standard operating procedure

QAPP Worksheet #24B – Pace Analytical Services, Inc., Minneapolis, Minnesota
Analytical Instrument Calibration Table

Worksheet:	24B
Analytical Group:	EPA 1613B

Instrument	Calibration Procedure	Frequency of Calibration	Acceptance Criteria	Corrective Action (CA)	Person Responsible for CA	SOP Reference
EPA 1613B HRGC/HRMS	Tune (PFK)	Prior to sample analysis.	Tune the instrument to a resolution of □ 10,000 (M/ΔM, 10% valley) using a PFK peak within the analysis mass range (M/Z 331 or 381)	Perform any necessary instrument maintenance; retune	Analyst	S-MN-H-002
EPA 1613B HRGC/HRMS	Column Performance Check Solution (CPSM). Solution includes the Window Defining Mix.	Prior to 12 hrs of sample analysis.	The valley between 2,3,7,8-TCDD or 2,3,7,8-TCDF and adjacent isomers must be <25%; the windows must be met for all groups.	Instrument maintenance to achieve resolution and resetting expected retention time.	Analyst	S-MN-H-002
EPA 1613B HRGC/HRMS	5 point Initial Calibration (Multipoint ICAL)	Initially as required	Ion rations must be within +/-15% of the true value; Percent relative standard deviation for each isomer in the initial calibration must be <35%	Retune, and repeat analysis of the multipoint calibration	Analyst	S-MN-H-002
EPA 1613B HRGC/HRMS	Daily Continuing Calibration Verification Standard (CCV)	Once per 12 hours, prior to sample analysis and at the end of the analytical sequence.	Response factors must be <20% for native compounds and <30% for labeled compounds	Repeat, if it doesn't pass the instrument must be recalibrated using the multi-point calibration	Analyst	S-MN-H-002

HRGC - High-Resolution Gamma-Ray Chromatography
HRMS - High-Resolution Mass Spectroscopy
ppm – parts per million
SOP – standard operating procedure

QAPP Worksheet #25A –TestAmerica Laboratories, Inc., West Sacramento, California
Analytical Instrument and Equipment Maintenance, Testing, and Inspection Table

Worksheet: 25A
Analytical Group: EPA 1613B

Instrument / Equipment	Maintenance Activity	Testing Activity	Inspection Activity	Frequency	Acceptance Criteria	Corrective Action	Responsible Person	SOP Reference
GC/MS	Parameter Setup	Physical check	Physical check	Initially; prior to DCC	Correct Parameters	Reset if incorrect	Chemist	SAC-ID-0007
GC/MS	Tune Check	Instrument Performance	Conformance to instrument tuning.	Initially; prior to DCC	Compliance to ion abundance criteria	Correct the problem and repeat tune check	Chemist	SAC-ID-0007

GC - Gas Chromatography
MS - Mass Spectroscopy

QAPP Worksheet #25B –Pace Analytical Services, Inc., Minneapolis, Minnesota
Analytical Instrument and Equipment Maintenance, Testing, and Inspection Table

Worksheet: 25B
Analytical Group: EPA 1613B

Instrument / Equipment	Maintenance Activity	Testing Activity	Inspection Activity	Frequency	Acceptance Criteria	Corrective Action	Responsible Person	SOP Reference
GC/MS	Parameter Setup	Physical check	Instrument Conformance	Initial set up and ongoing monitoring	Correct conditions	Reset parameters	Waters Service Contract; Dioxin Technical Director	S-MN-H-002; Manufacturer specifications
GC/MS	Tune Check	Instrument Performance	Conformance of method tuning criteria	Daily prior to ICAL/CCAL	Tune the instrument to a resolution of 10,000 (M/ΔM, 10% valley) using a PFK peak within the analysis mass range (M/Z 331 or 381)	Retune	Primary Analyst	S-MN-H-002

GC - Gas Chromatography
MS - Mass Spectroscopy

QAPP Worksheet #26
Sample Handling System

SAMPLE COLLECTION, PACKAGING, AND SHIPMENT
Sample Collection (Personnel/Organization): Homogenized soil samples will be collected in labeled, laboratory-supplied jars. The filled and labeled jars will be placed on ice in sample coolers in the upright position. Filled and labeled sample jars will be kept under COC protocol. Dust samples will be gathered from the Nilfisk sampler vacuum bag into the laboratory-supplied jar using. The filled and labeled jars will be placed on ice in sample coolers in the upright position. Filled and labeled sample jars will be kept under COC protocol. Wipe clothes will be removed from the hexane-preserved jar and will be returned to the jar and appropriately labeled following sample collection. Labeled jars will be kept under COC protocol Equipment blank samples will be collected by running a stream of distilled water over the equipment into labeled, 1 liter, laboratory-supplied amber jars. The filled and labeled jars will be placed on ice in sample coolers in the upright position. Filled and labeled sample jars will be kept under COC protocol. **Personnel:** Lorie Ambrosio, Field Team Leader; Diane Russell, Project Scientist; Kelly Hudson, Project Scientist; Jody Dillon, Project Scientist; Terrel Hankins, Project Scientist; Andy Kiel, Project Scientist, WESTON
Sample Packaging (Personnel/Organization): Following sampling, the exterior of all sample bottles will be initially decontaminated near the sampling location by wiping with a moist cloth. The filled sample containers will not be sprayed with water during decontamination because this water could contact the sample if the container was not tightly sealed. All samples will be checked to make sure container cap is securely tightened. Samples will be properly packaged on ice and will be kept cool to an approximate temperature of 4ºC. Samples will be padded with material (i.e. bubble wrap) to prevent breakage for shipment and dispatched to the laboratory for analysis, with a separate signed custody record enclosed in each sample cooler. Samples will be delivered to the fixed laboratory with a signed custody record for analysis. Shipping containers used to ship samples to the fixed laboratory will be locked and secured with strapping tape and custody seals for shipment to the laboratory. A custody seal will be attached to the front right and back left sides of the cooler. The custody seals will be covered with clear plastic tape. The cooler will be strapped shut with tape in at least two locations. **Personnel:** Lorie Ambrosio, Field Team Leader; Diane Russell, Project Scientist; Kelly Hudson, Project Scientist; Jody Dillon, Project Scientist; Terrel Hankins, Project Scientist; Andy Kiel, Project Scientist, WESTON

Coordination of Shipment (Personnel/Organization): Sample pick-up and/or drop off locations and times will be coordinated with the designated carrier (Federal Express). All shipments will be in compliance with International Air Transportation Association (IATA) and U.S. Department of Transportation (U.S. DOT) regulations and labeling requirements. Receipts of bills of lading will be retained as part of the permanent documentation. Commercial carriers will not be required to sign off on the COC form as long as the custody forms are sealed inside the sample cooler and the custody seals remain intact. **Personnel:** by Lori Kozel and the Field Team Leader, WESTON
Type of Shipment/Carrier: Federal Express
SAMPLE RECEIPT AND ANALYSIS
Sample Receipt (Personnel/Organization): Sample Receiving, Test America and Pace Analytical
Sample Custody and Storage (Personnel/Organization): Laboratory Sample Receipt at Test America and Pace Analytical
Sample Preparation (Personnel/Organization): Laboratory Personnel at Test America and Pace Analytical
Sample Determinative Analysis (Personnel/Organization): Laboratory Personnel at Test America and Pace Analytical
SAMPLE ARCHIVING
Field Sample Storage (No. of days from sample collection): All samples will be sent to the laboratory. The laboratory shall retain the samples for a period of 6 months from the date of sample collection.
Sample Extract/Digestate Storage (No. of days from extraction/digestion): 6 months
Biological Sample Storage (No. of days from sample collection): Not Applicable
SAMPLE DISPOSAL
Personnel/Organization: Laboratory - Test America and Pace Analytical
Number of Days from Analysis: 6 months from sample collection date

QAPP Worksheet #27
Sample Custody Requirements

Chain-of-custody Procedures:

A Chain-of-Custody (COC) record will be maintained from the time the sample is collected until its delivery to the laboratory. To maintain a record of sample collection, transfer between personnel, shipment, and receipt by the laboratory, a COC record will be filled out for each sample at each sampling location. Each individual in possession of the samples must sign and date the sample COC document. Each time the samples are transferred, the signatures of the persons relinquishing and receiving the samples, as well as the date and time, will be documented. A copy of the COC is retained by the site leader for the site file. When samples (or groups of samples) are not under direct control of the individual responsible for them, they must be stored in a locked container sealed with a custody seal. The COC record will be considered completed upon receipt at the laboratory.
The COC record should include (at minimum) the following:

- Type (s) of analysis (ses) to be performed.
- Sample ID number.
- Sample information.
- Sample station location.
- Sample date.
- Name(s) and signature(s) of sampler(s).
- Signature(s) of any individual(s) with control over samples.

A separate COC form must accompany each cooler in each shipment. Within the laboratory, the person responsible for sample receipt must sign and date the COC form; verify that custody seals are intact on shipping containers; compare samples received against those listed on the COC form; examine all samples for possible shipping damage, leakage, and improper sample preservation; note on the COC record or laboratory receiving documentation that specific samples were damaged; notify sampling personnel as soon as possible so that appropriate samples may be resampled; verify that sample holding times have not been exceeded; maintain laboratory COC documentation; and place the samples in appropriate laboratory storage. If requested, the laboratory may submit internal COC documentation with the data package. Final sample disposition is completed according to laboratory license requirements.

Sample Identification Procedures:
For soil samples: FPS-EU001-A-01-01-mmddyy
Where:

- FPS = project identifier ("Floodplain Sampling");
- EU001 = area identifier in sequential order;
- A = first property sampled, then in sequential order;
- 01 = 1st sample collected on property A, and then in sequential order for additional samples from property;
- 01 = shallow soil sample collected from 0 to 12 inches; with 02 representing the 18 to 24 inch interval; and 03 representing the 30 to 36 inch interval.
- mmddyy = date of sample collection
- Duplicate samples will follow the mmddyy by a "D"

For dust samples: FPS-EU001-DA-01-mmddyy
Where:

- FPS = project identifier ("Floodplain Sampling");
- EU001 = area identifier in sequential order;
- DA = representing that the sample is a dust sample and first property sampled, then in sequential order
- 01 = 1st sample collected from home A at the entry way; with 02 representing the second sample collected from the home
- mmddyy = date of sample collection
- Duplicate samples will follow the mmddyy by a "D"

For equipment blank samples: EB-mmddyy-D
Where:

- EB = equipment blank
- Mmddyy = date of sample collection expected to be on a once per day basis when decontamination is necessary.
- D – if the equipment blank is pertaining to the Nilfisk dust sampler.

QAPP Worksheet #28A – TestAmerica Laboratories, Inc., West Sacramento, California
QC Samples Table

Worksheet:	28A	Concentration Level	Low
Analytical Group:	EPA 1613B	Samplers Name	Lorie Ambrosio
Analytical SOP Reference:	SAC-ID-0007	Field Sampling Organization	Weston Solutions, Inc.
Matrix:	All	Analytical Organization	Test America Laboratories, Inc.
Sampling SOP	WSOP-1, 2, 4, and 7	No. of Sample Locations	600

QC Sample	Frequency / Number	Method / SOP QC Acceptance Limits	Corrective Action	Person(s) Responsible for Corrective Action	Data Quality Indicator (DQI)	Measurement Performance Criteria
Method Blank	One per preparation batch	No target analyte concentrations above the reporting limit (RL). Exception: OCDD concentration in the method blank is allowed to be 5X the RL without narration. Note "Totals" are not considered "target analytes" – no corrective action or flagging is necessary for positive totals in the method blank.	1) Re-analyze method blank if instrument carryover is suspected. 2) If still exceeds and analyte concentration in sample < RL or > 10X blank concentration, narrate and report results. 3) If "J" qualified positives are in the method blank or OCDD < 5X the RL, then no corrective action is necessary. Flag and report 4) If non-compliant and analyte concentration in sample is between RL	Chemist	Apply "B" flag on associated analytes	

			and 10X blank concentration, re-extract and re-analyze affected samples.			
Surrogate Spike or Internal Standards	Every analytical sample	Refer to QC Limit Table below	1) Check chromatography for interferences. If found, flag data. 2) Check S/N. If < 10:1, re-extract sample. 3) If S/N > 10:1, evaluate data usability, narrate and report. 4) Check instrument and re-analyze the extract if a problem is found and corrected. 5) Re-extract and re-analyze adversely affected samples.	Chemist	Apply "*" flag on non-conforming analytes	
Laboratory Control Sample/ Laboratory Control Sample Duplicate (LCS/LSCD)	One per sample preparation batch	Refer to QC Limit Table below	1) Review Internal Standards, as above. 2) Evaluate data for usability. 3) If the LCS recoveries are greater than the upper control limits and sample results are ND and RLs are met, no action is required – narrate and report. 4) If samples have positives > RL, re-	Chemist	Narrate as applicable	

			extract and re-analyze affected samples for analytes outside the acceptance criteria.			
Instrument Duplicate Analysis	One per sample preparation batch	Refer to QC Limit Table below	1) Review data for usability. 2) Narrate any outliers.	Chemist	Apply appropriate qualifier on non-conforming analytes	
Matrix Spike/ Matrix Spike Duplicate	One QC pair per sample preparation batch	Refer to QC Limit Table below	1) Review data for usability. 2) Narrate any outliers.	Chemist	Apply appropriate qualifier on non-conforming analytes	

QC – quality control
LCS – laboratory control samples
QL – quantitation limit

QAPP Worksheet #28A– TestAmerica Laboratories, Inc., West Sacramento, California
QC Samples Table (Continued)

Solid Samples	LCS/LCSD Control Limits					MS/MSD Control Limits				
Compound	AMT	Units	LCL	UCL	RPD	AMT	Units	LCL	UCL	RPD
2,3,7,8-TCDF	20	pg/g	75	158	25	20	pg/g	75	158	25
Total TCDF			0	0	0			0	0	0
1,2,3,7,8-PeCDF	100	pg/g	80	134	25	100	pg/g	80	134	25
2,3,4,7,8-PeCDF	100	pg/g	68	160	25	100	pg/g	68	160	25
Total PeCDF			0	0	0			0	0	0
1,2,3,4,7,8-HxCDF	100	pg/g	72	134	25	100	pg/g	72	134	25
1,2,3,6,7,8-HxCDF	100	pg/g	84	130	25	100	pg/g	84	130	25
1,2,3,7,8,9-HxCDF	100	pg/g	78	130	25	100	pg/g	78	130	25
2,3,4,6,7,8-HxCDF	100	pg/g	70	156	25	100	pg/g	70	156	25
Total HxCDF			0	0	0			0	0	0
1,2,3,4,6,7,8-HpCDF	100	pg/g	82	122	25	100	pg/g	82	122	25
1,2,3,4,7,8,9-HpCDF	100	pg/g	78	138	25	100	pg/g	78	138	25
Total HpCDF			0	0	0			0	0	0
OCDF	200	pg/g	63	170	25	200	pg/g	63	170	25
2,3,7,8-TCDD	20	pg/g	67	158	25	20	pg/g	67	158	25
Total TCDD			0	0	0			0	0	0
1,2,3,7,8-PeCDD	100	pg/g	70	142	25	100	pg/g	70	142	25
Total PeCDD			0	0	0			0	0	0
1,2,3,7,8,9-HxCDD	100	pg/g	64	162	25	100	pg/g	64	162	25
1,2,3,4,7,8-HxCDD	100	pg/g	70	164	25	100	pg/g	70	164	25
1,2,3,6,7,8-HxCDD	100	pg/g	76	134	25	100	pg/g	76	134	25
Total HxCDD			0	0	0			0	0	0
1,2,3,4,6,7,8-HpCDD	100	pg/g	70	140	25	100	pg/g	70	140	25

AMT – amount LCSD - laboratory control sample duplicate MS/MSD – Matrix Spike/Matrix Spike Duplicate
LCS – laboratory control sample LCL – lower control limit Pg/g – picograms per gram RPD – Relative Percent Difference

QAPP Worksheet #28A – TestAmerica Laboratories, Inc., West Sacramento, California
QC Samples Table (Continued)

Solid Samples	LCS/LCSD Control Limits					MS/MSD Control Limits				
Compound	AMT	Units	LCL	UCL	RPD	AMT	Units	LCL	UCL	RPD
Total HpCDD			0	0	0			0	0	0
OCDD	200	pg/g	78	144	25	200	pg/g	78	144	25

Solids	Internal Standard Control Limits			
Compound	AMT	Units	LCL	UCL
13C-2,3,7,8-TCDF	200	pg/g	24	169
13C-1,2,3,7,8-PeCDF	200	pg/g	24	185
13C-2,3,4,7,8-PeCDF	200	pg/g	21	178
13C-1,2,3,4,7,8-HxCDF	200	pg/g	26	152
13C-1,2,3,6,7,8-HxCDF	200	pg/g	26	123
13C-1,2,3,7,8,9-HxCDF	200	pg/g	29	147
13C-2,3,4,6,7,8-HxCDF	200	pg/g	28	136
13C-1,2,3,4,6,7,8-HpCDF	200	pg/g	28	143
13C-1,2,3,4,7,8,9-HpCDF	200	pg/g	26	138
37Cl4-2,3,7,8-TCDD	80	pg/g	35	197
13C-2,3,7,8-TCDD	200	pg/g	25	164
13C-1,2,3,7,8-PeCDD	200	pg/g	25	181
13C-1,2,3,4,7,8-HxCDD	200	pg/g	32	141
13C-1,2,3,6,7,8-HxCDD	200	pg/g	28	130

QAPP Worksheet #28A – TestAmerica Laboratories, Inc., West Sacramento, California
QC Samples Table (Continued)

Solids	Internal Standard Control Limits			
Compound	AMT	Units	LCL	UCL
13C-1,2,3,4,6,7,8-HpCDD	200	pg/g	23	140
13C-OCDD	400	pg/g	17	157

Liquid Samples	LCS/LCSD Control Limits					MS/MSD Control Limits				
Compound	AMT	Units	LCL	UCL	RPD	AMT	Units	LCL	UCL	RPD
2,3,7,8-TCDF	200	pg/g	75	158	25	200	pg/g	75	158	25
Total TCDF			0	0	0			0	0	0
1,2,3,7,8-PeCDF	1000	pg/g	80	134	25	1000	pg/g	80	134	25
2,3,4,7,8-PeCDF	1000	pg/g	68	160	25	1000	pg/g	68	160	25
Total PeCDF			0	0	0			0	0	0
1,2,3,4,7,8-HxCDF	1000	pg/g	72	134	25	1000	pg/g	72	134	25
1,2,3,6,7,8-HxCDF	1000	pg/g	84	130	25	1000	pg/g	84	130	25
1,2,3,7,8,9-HxCDF	1000	pg/g	78	130	25	1000	pg/g	78	130	25
2,3,4,6,7,8-HxCDF	1000	pg/g	70	156	25	1000	pg/g	70	156	25
Total HxCDF			0	0	0			0	0	0
1,2,3,4,6,7,8-HpCDF	1000	pg/g	82	122	25	1000	pg/g	82	122	25
1,2,3,4,7,8,9-HpCDF	1000	pg/g	78	138	25	1000	pg/g	78	138	25
Total HpCDF			0	0	0			0	0	0
OCDF	2000	pg/g	63	170	25	2000	pg/g	63	170	25
2,3,7,8-TCDD	200	pg/g	67	158	25	200	pg/g	67	158	25
Total TCDD			0	0	0			0	0	0
1,2,3,7,8-PeCDD	1000	pg/g	70	142	25	1000	pg/g	70	142	25

Note: Liquid samples are only collected as equipment blanks for QC purposes.

QAPP Worksheet #28A– TestAmerica Laboratories, Inc., West Sacramento, California
QC Samples Table (Continued)

Liquid Samples	LCS/LCSD Control Limits					MS/MSD Control Limits				
Compound	AMT	Units	LCL	UCL	RPD	AMT	Units	LCL	UCL	RPD
Total PeCDD			0	0	0			0	0	0
1,2,3,7,8,9-HxCDD	1000	pg/g	64	162	25	1000	pg/g	64	162	25
1,2,3,4,7,8-HxCDD	1000	pg/g	70	164	25	1000	pg/g	70	164	25
1,2,3,6,7,8-HxCDD	1000	pg/g	76	134	25	1000	pg/g	76	134	25
Total HxCDD			0	0	0			0	0	0
1,2,3,4,6,7,8-HpCDD	1000	pg/g	70	140	25	1000	pg/g	70	140	25
Total HpCDD			0	0	0			0	0	0
OCDD	2000	pg/g	78	144	25	2000	pg/g	78	144	25

Liquid Samples	Internal Standard Control Limits			
Compound	AMT	Units	LCL	UCL
13C-2,3,7,8-TCDF	2000	pg/g	24	169
13C-1,2,3,7,8-PeCDF	2000	pg/g	24	185
13C-2,3,4,7,8-PeCDF	2000	pg/g	21	178
13C-1,2,3,4,7,8-HxCDF	2000	pg/g	26	152
13C-1,2,3,6,7,8-HxCDF	2000	pg/g	26	123
13C-1,2,3,7,8,9-HxCDF	2000	pg/g	29	147
13C-2,3,4,6,7,8-HxCDF	2000	pg/g	28	136
13C-1,2,3,4,6,7,8-HpCDF	2000	pg/g	28	143
13C-1,2,3,4,7,8,9-HpCDF	2000	pg/g	26	138
37Cl4-2,3,7,8-TCDD	800	pg/g	35	197

Note: Liquid samples are only collected as equipment blanks for QC purposes.

QAPP Worksheet #28A – TestAmerica Laboratories, Inc., West Sacramento, California
QC Samples Table (Continued)

Liquid Samples	Internal Standard Control Limits			
Compound	AMT	Units	LCL	UCL
13C-2,3,7,8-TCDD	2000	pg/g	25	164
13C-1,2,3,7,8-PeCDD	2000	pg/g	25	181
13C-1,2,3,4,7,8-HxCDD	2000	pg/g	32	141
13C-1,2,3,6,7,8-HxCDD	2000	pg/g	28	130
13C-1,2,3,4,6,7,8-HpCDD	2000	pg/g	23	140
13C-OCDD	4000	pg/g	17	157

Note: Liquid samples are only collected as equipment blanks for QC purposes.

QAPP Worksheet #28B – Pace Analytical Services, Inc., Minneapolis, Minnesota
QC Samples Table

Worksheet:	28B	Sampling SOP	WSOP-1, 2, 4, and 7
Analytical Group:	EPA 1613B	Samplers Name	Lorie Ambrosio
SOP Reference:	S-MN-H-002	Field Sampling Organization	Weston Solutions, Inc.
Matrix:	All	Analytical Organization	Pace Analytical Services, Inc.

QC Sample	Frequency / Number	Method / SOP QC Acceptance Limits	Corrective Action	Person(s) responsible for Corrective Action	Data Quality Indicator (DQI)	Measurement Performance Criteria
Method Blank	One per preparation batch	No contamination above levels of the lowest calibration solution.	Re-extract all associated samples with similar detections. Only report if samples contain greater than 10X that of the blank. All data should be narrated accordingly.	Chemist		
Surrogate Spike	Every analytical sample	Method derived limits 31-191%	Reextract or reanalyze to confirm recoveries; narrate accordingly.	Chemist		
Laboratory Control Sample	One per sample preparation batch	Method derived limits ranging from 63-170% for PCDD/PCDF.	Reextract or reanalyze to confirm recoveries; narrate accordingly.	Chemist		

QAPP Worksheet #28B – Pace Analytical Services, Inc., Minneapolis, Minnesota
QC Samples Table (Continued)

Analyte	Soils			Waters		LCS/LCSD Control limits			MS/MSD Control limits			DUP Limits
	MDL (ng/Kg)	RDL (ng/Kg)	PRL (ng/Kg)	MDL (pg/L)	PRL (pg/L)	Lower	Upper	RPD	Lower	Upper	RPD	RPD
2,3,7,8-TCDF	0.2	0.20	1.0	1.5	10	67	158	20	70	130	20	25
2,3,7,8-TCDD	0.1	0.05	1.0	1.8	10	75	158	20	70	130	20	25
1,2,3,7,8-PeCDF	0.3	0.15	5.0	2.4	50	70	142	20	70	130	20	25
2,3,4,7,8-PeCDF	0.2	0.10	5.0	2.4	50	80	134	20	70	130	20	25
1,2,3,7,8-PeCDD	0.2	0.10	5.0	1.9	50	68	160	20	70	130	20	25
1,2,3,4,7,8-HxCDF	0.3	0.15	5.0	1.9	50	70	164	20	70	130	20	25
1,2,3,6,7,8-HxCDF	0.3	0.15	5.0	2.5	50	76	134	20	70	130	20	25
2,3,4,6,7,8-HxCDF	0.3	0.15	5.0	3.0	50	64	162	20	70	130	20	25
1,2,3,7,8,9-HxCDF	0.1	0.05	5.0	4.2	50	72	134	20	70	130	20	25
1,2,3,4,7,8-HxCDD	0.1	0.05	5.0	4.8	50	84	130	20	70	130	20	25
1,2,3,6,7,8-HxCDD	0.5	0.25	5.0	3.8	50	78	130	20	70	130	20	25
1,2,3,7,8,9-HxCDD	0.2	0.10	5.0	2.7	50	70	156	20	70	130	20	25
1,2,3,4,6,7,8-HpCDF	0.5	0.25	5.0	3.6	50	70	140	20	70	130	20	25
1,2,3,4,7,8,9-HpCDF	0.5	0.25	5.0	3.9	50	82	122	20	70	130	20	25
1,2,3,4,6,7,8-HpCDD	0.4	0.20	5.0	4.8	50	78	138	20	70	130	20	25
OCDF	1.5	0.75	10.0	4.3	100	78	144	20	70	130	20	25
OCDD	3.5	1.75	10.0	13.4	100	63	170	20	70	130	20	25

LCS/LCSD – laboratory control sample/laboratory control sample duplicate
MDL – method detection limit
MS/MSD – matrix spike/matrix spike duplicate
ng/kg – nanograms per kilogram
PRL – pattern recognition level
RPD – relative percent difference
RDL – reliable detection limit

Note: Liquid samples are only collected as equipment blanks for QC purpose

QAPP Worksheet #28B – Pace Analytical Services, Inc., Minneapolis, Minnesota
QC Samples Table (Continued)

Labeled Analyte Recovery when all CDDs/CDFs are tested

Labeled Analyte	**Control limits**	
	Lower	**Upper**
$^{13}C_{12}$-2,3,7,8-TCDF	25	164
$^{13}C_{12}$-2,3,7,8-TCDD	24	169
$^{13}C_{12}$-1,2,3,7,8-PeCDF	25	181
$^{13}C_{12}$-2,3,4,7,8-PeCDF	24	185
$^{13}C_{12}$-1,2,3,7,8-PeCDD	21	178
$^{13}C_{12}$-1,2,3,4,7,8-HxCDF	32	141
$^{13}C_{12}$-1,2,3,6,7,8-HxCDF	28	130
$^{13}C_{12}$-2,3,4,6,7,8-HxCDF	26	152
$^{13}C_{12}$-1,2,3,7,8,9-HxCDF	26	123
$^{13}C_{12}$-1,2,3,4,7,8-HxCDD	29	147
$^{13}C_{12}$-1,2,3,6,7,8-HxCDD	28	136
$^{13}C_{12}$-1,2,3,7,8,9-HxCDD	23	140
$^{13}C_{12}$-1,2,3,4,6,7,8-HpCDF	28	143
$^{13}C_{12}$-1,2,3,4,7,8,9-HpCDF	26	138
$^{13}C_{12}$-1,2,3,4,6,7,8-HpCDD	17	157
$^{37}Cl_4$-2,3,7,8-TCDD	35	197

QAPP Worksheet #29

Project Documents and Records Table

Sample Collection Documents and Records	On-site Analysis Documents and Records	Off-site Analysis Documents and Records	Data Assessment Documents and Records	Other
Logbook(s)	NA	Sample Receipt, Custody, and Tracking Records	Data Validation Reports	
Response Manager Database and SCRIBE Database		Preliminary analytical data reports	Corrective Action Reports	
Chain-of-Custody Forms		Final Analytical Data Summary Reports	Project Data Evaluation Report	
Photos		Laboratory Electronic Data Deliverables	Monthly Progress Reports	
GPS Coordinates		Equipment Calibration Logs	Property-specific usability assessment reports	
Airbills		Sample Preparation Logs		
Field Diagrams		Run Logs		
Core logs		Equipment Maintenance, Testing, and Inspection Logs		
		Instrument printouts (raw data)		
		Quality Control Sample Summary Forms		
		Sample Disposal Records		
		Corrective Action Reports		
		Sample Bottle Lot/QC Information		

QAPP Worksheet #30A – TestAmerica Laboratories, Inc., West Sacramento, California
Analytical Services Table

Matrix	Analytical Group	Sample Locations/ID Number	Analytical Method	Data Package Turnaround Time	Laboratory / Organization (name and address, contact person and telephone number)	Backup Laboratory / Organization[1] (name and address, contact person and telephone number)
All	All	To be determined	All	10 Days for preliminary results; 28 Days for final data package	TestAmerica Laboratories, Inc. Inc. 880 Riverside Parkway West Sacramento, CA 95605 Robert Weidenfeld (916) 374-4333	

QAPP Worksheet #30B – Pace Analytical Services, Inc., Minneapolis, Minnesota
Analytical Services Table

Matrix	Analytical Group	Sample Locations/ID Number	Analytical Method	Data Package Turnaround Time	Laboratory / Organization (name and address, contact person and telephone number)	Backup Laboratory / Organization[1] (name and address, contact person and telephone number)
All	All	To be determined	1613B	15 Days for preliminary results; 20 Days for final data package	Pace Analytical Services, Inc. Scott Unze 1700 Elm Street SE, Suite 200, Minneapolis, MN 55414 612-607-1700	

QAPP Worksheet #31 –
Planned Project Assessments Table

Assessment Type	Frequency	Internal or External	Organization Performing Assessment	Person(s) Responsible for Performing Assessment (Title and Organizational Affiliation)	Person(s) Responsible for Responding to Assessment Findings (Title and Organizational Affiliation)	Person(s) Responsible for Identifying and Implementing Corrective Actions (CA) (Title and Organizational Affiliation)	Person(s) Responsible for Monitoring Effectiveness of CA (Title and Organizational Affiliation)
Field Sampling Protocol Audit	Once at sampling Inception	Internal	WESTON	WESTON PM	Site Leader and Field Team Leader - WESTON	PM, Site Leader and Field Team Leader - WESTON	WESTON PM and Site Leader
Field QA Audit	Within first 30 days of sampling	Internal	WESTON	WESTON QA Officer or qualified Designee	PM, Site Leader, and Field Team Leader - WESTON	QA Officer, PM, Site Leader and Field Team Leader - WESTON	WESTON PM and Site Leader
Field Safety Audit	Within first 30 days of sampling	Internal	WESTON	WESTON Safety Officer	PM, Site Leader and Field Team Leader - WESTON	Safety Officer, PM, Site Leader and Field Team Leader - WESTON	WESTON PM and Site Leader
Laboratory Audit via PE Sample	One per laboratory = 2	External	WESTON	WESTON QA Officer or qualified Designee	Laboratory QC Managers: Pace Analytical - Melanie Ollila Test America - Pamela Schemmer	Laboratory QC Managers: Pace Analytical - Melanie Ollila Test America - Pamela Schemmer	WESTON QA Officer or Qualified Designee

QAPP Worksheet #32
Assessment Findings and Corrective Action Responses

Assessment Type	Nature of Deficiencies Documentation	Individual(s) Notified of Findings (Name, Title, Organization)	Timeframe of Notification	Nature of Corrective Action Response Documentation	Individual(s) Receiving Corrective Action Response (Name, Title, Org.)	Timeframe for Response
Field Sampling Protocol Audit	Written Audit Report	Lori Kozel, Site Leader; and designated field team leader (WESTON)	Within 24 hours of audit	Memo	OSC Jeffrey Kimble (U.S. EPA)	2 days after receiving notification
Field QA Audit	Written Audit Report	Alex Clark, PM; Lori Kozel, Site Leader; and designated field team leader (WESTON)	Within 24 hours of audit	Memo	OSC Jeffrey Kimble (U.S. EPA)	5 days after receiving notification
Field Safety Audit	Written Audit Report	Alex Clark, PM; Lori Kozel, Site Leader; and designated field team leader (WESTON)	Within 24 hours of audit	Memo	OSC Jeffrey Kimble (U.S. EPA)	5 days after receiving notification
Laboratory Audit via PE Sample	Written Audit Report	QC Managers at Test America and Pace Analytical Laboratories	Within 5 days of receiving results	Letter	WESTON QA Officer	5 days after receiving notification

OSC – On-Scene Coordinator
U.S. EPA – United States Environmental Protection Agency
WESTON – Weston Solutions, Inc

QAPP Worksheet #33
QA Management Reports Table

Type of Report	Frequency (daily, weekly monthly, quarterly, annually, etc.)	Projected Delivery Date(s)	Person(s) Responsible for Report Preparation (Title and Organizational Affiliation)	Report Recipient(s) (Title and Organizational Affiliation)
Data Validation Report	To be prepared following receipt of an analytical data package	10 business days following receipt of final data package from laboratory	Linda Korobka, Data Validator, WESTON (or qualified alternate)	Alex Clark, Project Manager, WESTON
Final Project Report	To be prepared following receipt of all analytical data validation reports	1 month following receipt of all data validation reports	Alex Clark, Project Manager, WESTON	Jeff Kimble, OSC, U.S. EPA Region 5
Monthly Progress Reports	monthly	Approximately the 20th of each month	Alex Clark, Project Manager, WESTON	Jeff Kimble, OSC, U.S. EPA Region 5

OSC – On-Scene Coordinator
U.S. EPA – United States Environmental Protection Agency
WESTON – Weston Solutions, Inc

QAPP Worksheet #34
Verification (Step I) Process Table

Verification Input	Description	Internal/ External	Responsible for Verification (Name, Organization)
Chain-of-Custody (COC) Forms	The Site Leader will submit COC forms to the project manager within 12 hours following all sample shipments to the laboratory. The project manager will review the COC forms for completeness to ensure that the proper analyses are being performed.	Internal	Alex Clark, WESTON
Logbook	The project manager will review the logbook for accuracy and completeness following field sampling activities.	Internal	Alex Clark, WESTON
Laboratory Data	All laboratory data will be verified by the QA officer of the laboratory performing the sample analyses.	Internal	Melanie Ollila, QC Manager, Pace Analytical Services, Inc.
	All laboratory data will be verified by the second level data reviewer of the laboratory performing the sample analyses.	Internal	Robert Hrabak, Operations Manager, TestAmerica Laboratories, Inc.
	The laboratory data will be validated in accordance with the procedures described in Worksheet #s 35 and 36.	External	Linda Korobka, WESTON
Database Verification	The site leader will verify that information entered into the database by the field team leader is accurate and that the database is promptly updated as new data is available.	Internal	Lori Kozel, WESTON

COC – Chain-of-Custody
QA – Quality Assurance
TBD – To Be Determined
WESTON – Weston Solutions, Inc.

QAPP Worksheet #35
Validation (Steps IIa and IIb) Process Table

Step IIa/IIb	Validation Input	Description	Responsible for Validation (Name, Organization)
IIa	SOPs and logbook	The project manager will ensure that all SOPs were followed in the field through daily conversations with the site leader and field team leader and by reviewing the site logbook.	Alex Clark, WESTON
IIa	Preliminary Data and Final Analytical Data Package	The analytical services coordinator will review the preliminary data and final analytical data package to ensure that all analyses requested were received and to ensure that required project quantitation limits were met	Linda Korobka, WESTON or qualified alternate
IIb	Final Analytical Data Package	The data validator will perform data validation of the final analytical data package to ensure that all QC requirements specified in the QAPP were met. The data validation will be conducted in general accordance with the *U.S. EPA Contract Laboratory Program National Functional Guidelines for Chlorinated Dioxin/Furan Data Review* dated September 2005 along with the laboratory specific analytical SOP and procedures defined throughout the project specific QAPP.	Linda Korobka, WESTON or qualified alternate

QAPP – Quality Assurance Project Plan
QC – Quality Control
SOP – Standard Operating Procedure
WESTON – Weston Solutions, Inc.

QAPP Worksheet #36
Validation (Steps IIa and IIb) Summary Table

Step IIa/IIb	Matrix	Analytical Group	Concentration Level	Validation Criteria	Data Validator (title and organizational affiliation)
IIb	Soil	Dioxin and furans	Low	U.S. EPA NFG	Linda Korobka, Data Validator, WESTON – or other qualified alternate.
IIb	Dust/Wipes	Dioxin and furans	Low	U.S. EPA NFG	Linda Korobka, Data Validator, WESTON – or other qualified alternate.
IIb	Aqueous (equipment blanks)	Dioxin and furans	Low	U.S. EPA NFG	Linda Korobka, Data Validator, WESTON – or other qualified alternate.

NFG - *Contract Laboratory Program National Functional Guidelines for Chlorinated Dioxin/Furan Data Review* dated September 2005.
U.S. EPA – United States Environmental Protection Agency
WESTON – Weston Solutions, Inc.

QAPP Worksheet #37
Usability Assessment

Summarize the usability assessment process and all procedures, including interim steps and any statistics, equations, and computer algorithms that will be used:

Data, whether generated in the field or by the laboratory, are tabulated and reviewed for precision, accuracy, representativeness, completeness, and comparability (PARCC) by the site leader for field data and by the site leader, data validator, QA officer, and project manager for laboratory data.

- The data validator will assess individual laboratory batches for sensitivity, precision and accuracy using the criteria outlined in Worksheet #12.
    - Sensitivity: Results for laboratory fortified blanks will be presented separately in tabular format. The results will be checked against the measurement performance criteria presented on Worksheet #12 and the quantitation limits on Worksheet #15. Results that exceed the sensitivity criteria will be identified in the tables.
    - Precision: Results for laboratory duplicates will be presented separately in tabular format. The relative percent difference (RPD) will be calculated for each duplicate pair and compared to the measurement performance criteria presented on Worksheet #12 and Worksheet# 28. Field duplicates will be presented in separately in tabular format. The RPD will be calculated for the investigative sample versus the duplicate and compared to the measurement performance criteria presented on Worksheet #12. Results that exceed the precision criteria will be identified on the tables.
    - Accuracy/Bias (Performance Evaluation (PE) samples): PE samples will be submitted to each laboratory at a frequency of approximately 1 per 3 months. Results of the PE samples will be presented separately in tabular format and compared to measurement criteria presented in Worksheet #12.
    - Accuracy/Bias (Blanks): Equipment blank, method blank, and instrument blank results will be tabulated separately. The results will be compared to the individual quantitation limits and the measurement performance criteria presented on Worksheet #12. Results exceeding the quantitation limits will be identified on the tables.
- The project manager, site leader and data validator will evaluate the data for completeness for each property/area sampled as the validated data is made available to make that determination. Completeness will be determined by the number of data points that meet the measurement criteria for sensitivity, precision and accuracy (Worksheet #12) out of the total number of samples collected for a given property or area. A usability assessment report will be prepared for each property once validation results, determination of completeness, and representativeness calculations (discussed below) are completed. The usability assessment report will be prepared for each property/area discussing completeness and representativeness calculations and conclusions based on the usability assessment.

  An overall summary of the usability data for the project will be provided in the final report prepared by the project manager and project team.
- Overall representativness will be evaluated with the assistance of the VSP statistical models by the site leader, the project manager, and the QA officer

(or designee).

- A limited comparability evaluation will be conducted for the project due to the limited historical data that is available for much of the study area. The results of the sampling program will be used as a benchmark for potential further monitoring/sampling or to determine the effectiveness of exposure reduction actions. The limited historical sampling data available will be used to determine the comparability of data only where new data is to be collected on properties where historical data exists. Comparability will be evaluated by the project manager and project team in the final report.

The overall outcome of the usability assessment will be used to determine if the DQOs have been met for each area/property on an interim basis, and for the overall project in the final report.

Questions about data, as observed during the data review process, are resolved by contacting the respective site personnel and laboratories for resolution. All communications are documented including the resolution to the observed deficiencies. Hard copies of all original data and deliverables are kept in the TDD file.

When the data do not meet the project DQOs, START will investigate the root cause to the deficiency. Reasons may include laboratory operation, such as the laboratory's failure to adjust the extraction weight on high-moisture-content soil or failure of laboratory reporting limits to meet site Action Limits. In these situations, START will discuss corrective actions with the OSC. These actions may include:

- Resampling for all or some of the parameters.
- Preparing a technical memorandum to the site file, detailing limitations to the data.
- Validating the data at a higher tier level to better qualify the results.
- Preparing a technical memorandum determining the bias of field results.

Identify the personnel responsible for performing the usability assessment:

The site leader, Lori Kozel, will determine the usability of field data and assist with determining representativeness, completeness, and comparability of the data. The data validator, Linda Korobka (or designated alternates), will validate the data and determine the sensitivity, precision and accuracy of the data during the validation process and assist with determining completeness. The QA officer, Tonya Balla, will assist with determining the representativeness of the data. The project manage, Alex Clark, will be responsible for the overall usability to meet project objectives.

Describe the documentation that will be generated during usability assessment and how usability assessment results will be presented so that they identify trends, relationships (correlations), and anomalies: Data validation reports will be prepared for each batch of laboratory data validated. Overall usability of data to meet project objectives will be described in interim evaluations for each property/area sampled and the final report to be prepared by the project manager.

Notes:
DQI – Data Quality Indicator
DQO - Data Quality Objective
PARCC - Precision, accuracy, Representativeness, Completeness, and Comparability
QA – Quality Assurance
QAPP – Quality Assurance Project Plan
START – Superfund Technical Assessment and Response Team

APPENDIX A

FIELD SAMPLING SOPs

- WSOP-1: Superfund Technical Assessment and Response Team, Surface Soil Sampling
- WSOP-2: Collection of Indoor Dust Samples from Carpeted Surfaces for Chemical Analysis Using a Nilfisk GS-80 Vacuum Cleaner
- WSOP-3: Superfund Technical Assessment and Response Team, Logbook Documentation
- WSOP-4: Superfund Technical Assessment and Response Team, Subsurface Soil Sampling
- WSOP-5: Model pDR-1000AN/1200, Personal DATARAM, Particulate Monitor Instruction Manual
- WSOP-6: Superfund Technical Assessment and Response Team, Decontamination Procedures
- WSOP-7: Superfund Technical Assessment and Response Team, Wipe Sample Collection

SUPERFUND TECHNICAL ASSESSMENT RESPONSE TEAM
STANDARD OPERATING PROCEDURE

SOP 302
SURFACE SOIL SAMPLING

1.0 INTRODUCTION

The purpose of this SOP is to provide WESTON, START members with a step-by-step guide for collecting representative surface soil samples using scoops and bucket augers.

2.0 MATERIALS REQUIRED

Below is a list of the materials needed for surface soil sampling events. Both dedicated and reusable sampling equipment are required.

- Personal protective equipment (as specified in the Health and Safety Plan [HASP])
- Sampling plan
- Maps/sketches
- Compass
- Tape measure (up to 300 feet)
- Survey flags/stakes
- Aluminum homogenization pans or stainless steel bowls
- Sample jars
- Logbook
- Sample labels/tags
- Chain-of-custody forms and custody seals
- Field data sheets
- Coolers
- Ice
- Decontamination equipment (brushes, buckets, garden sprayer, phosphate-free soap, water, etc.)
- Ziploc7 bags
- Plastic sheeting
- Paper towels
- Ball-point pen
- Permanent marker
- Grease pencil
- Marking spray paint
- Digital camera or a camera with film
- Air monitoring equipment [Micro FID, Multi Rae 5 Gas detector, etc.]
- Plastic sample scoops, if applicable
- Bucket auger, if applicable

- Thin-walled tube sampler, if applicable
- Plastic garbage bag
- Scissors

3.0 SAFETY PRECAUTIONS

Due to unknown constituents of the soil media, the exposure potential for personnel exists and must be of primary concern. Before any soil sampling is performed, a HASP must be approved by the START Safety Officer.

1. Follow the HASP safety schedule.
2. Determine the appropriate levels of protection to be worn by personnel.
3. Conduct air monitoring in the breathing zones and screen the sample location holes once they are selected.
4. Ensure that equipment is properly decontaminated and in working condition prior to the mobilizing to the site.
5. Coordinate efforts and staffing with the client or agency with which you are working.

4.0 SAMPLING PROCEDURES

1. Perform a general site reconnaissance to verify actual site conditions consistent with the HASP.
2. Identify and mark all sampling locations using sample flags or stakes as specified in the sampling plan. All sample locations should be measured, documented, and mapped in reference to a GPS location or permanent marker, i.e. specified utility pole, benchmark, property marker, etc.
3. Mark the pertinent site information in a site logbook and on field data sheets. When large amounts of samples are collected, field data sheets allow for easy organization in addition to logbook entries.
4. Make sure all sampling equipment is properly decontaminated prior to sampling.
5. Wear clean, disposable surgical gloves for each sampling location.
6. Begin sampling by cutting or pulling back debris with a stainless steel or dedicated plastic scoop.
7. Cover the sample location area with plastic sheeting if the soil has a high probability of contamination.
8. Continue cutting to the required depth. Generally, surface sampling is considered 0 to 3 inches below the surface. It is recommended sample holes be kept the same size diameter (suggested 6 inches) even when using scoops to keep samples relative to each other. Sample collection will focus on soil particles, not plant and tree roots, stones, rocks, concrete and other materials intermixed in the soil matrix.
9. If a grab sample is to be collected, transfer the sample volume directly into the sample container using a sampling device. Check the preferred sampling apparatus list for various analytical parameters. A grab sample pertains to a discreet depth or area in a given matrix.

10. Transfer the sample volume to a homogenization container if the sample is a composite sample or a pseudo-grab sample. A composite sample is a mixture of different depths, areas, and/or strata. Composite samples are not recommended for the collection of volatile organic compounds (VOC) samples because mixing causes volatile compounds to evaporate.
11. There are several homogenization techniques. The Aquartering technique@ requires the total volume of samples be divided into fourths inside the aluminum pan. Each quarter is then mixed individually, then the quarters are combined. This technique is repeated until a thorough mixing has occurred. The second method is the Abakers technique@, which simply entails mixing the soil volume with hands covered by surgical gloves or sampling scoops. The Ashake and bake technique@ allows the cleanest mixing. This technique requires emptying the sample volume into a Ziploc7 bag, sealing the bag, and then shaking the bag until the sample volume is thoroughly mixed. Note the qualities (color, texture, etc.) of the homogenized sample.
12. Place the sample in the designated sample container after the sample has been homogenized.
13. Label the sample container. Sample labels and tags are to be filled out with a permanent marker (ball point pen ink bleeds when wet). Use a grease pencil to fill out labels and tags for samples to be analyzed for VOCs. Additionally, it is recommended that the bottom of the sample jar be marked with the time of collection, the sample location, and the sampler=s initials, in case the labels are rendered illegible.
14. Place the sample jar into an appropriate sized Ziploc7 bag.
15. Place the sample on ice. Generally, soil samples do not require any preservative; however, unless told otherwise, it is always good practice to put samples on ice.
16. Decontaminate the sampling apparatus using the proper procedure (see Section 6.0 Decontamination of Sampling Equipment).
17. Complete the chain-of-custody form in a clear and concise manner.
18. Repeat steps 1-17 for each sample location.

5.0 SAMPLING DEVICES

Three common sampling devices used by START personnel include the sample scoop, the auger, and the thin-walled sampler/corer. The sample scoop includes both dedicated disposable plastic scoops and stainless steel scoops. Augers include bucket augers and hand augers. The thin-walled sampler/corer is the least used device of the three.

5.1 Scoops

Scoops make sampling quick and easy. Any time rough terrain is encountered, scoops are the ideal device. Generally disposable scoops are used because no wet decontamination is required. Never reuse dedicated scoops and always make sure proper decontamination has been performed for non-disposable sample scoops.

5.2 Bucket and Hand Augers

Augers are manually driven stainless steel sampling devices. The hand auger is a smaller version of the bucket auger. Augers tend to fluff sample volumes. Because of their design, augers are recommended for composite sampling. Augers are not recommended for VOC sampling because volatiles will be driven off.

5.2.1 Auger Sampling Procedures

1. Decontaminate augers before collecting first sample.
2. Cut a 12-inch hole in the plastic sheeting around sample location using scissors.
3. Discard debris and other surface material.
4. Place the auger perpendicular to the ground and twist the AT@ handle in a clockwise rotation until the desired depth is achieved. To determine the depth of the sample measure the actual removed core or the depth of the new bore hole.
5. Retrieve the specified sample volume. Any additional sample volume can be returned to the sample hole.
6. Place the sample volume into a homogenization pan and mix thoroughly.
7. Place the sample in the designated sample container. Note: Only VOA *containers are to be packed tightly*.
8. Label the sample container. Sample labels and tags are to be filled out with a permanent marker (*ball point pen ink bleeds when wet*). Use a grease pencil to fill out labels and tags for samples to be analyzed for VOCs. Additionally, it is recommended that the bottom of the sample jar be marked with the time of collection, the sample location, and the sampler=s initials, in case the labels are rendered illegible.
9. Place the sample jar into an appropriate sized Ziploc7 bag.
10. Place the sample on ice. Generally, soil samples do not require any preservative; however, unless told otherwise, it is always good practice to put samples on ice.
11. Decontaminate the auger using the proper procedure (see Section 6.0 Decontamination of Sampling Equipment).
12. Complete the chain-of-custody form in a clear and concise manner.
13. Repeat steps 1-12 for each sample location.

Note: A major drawback for auger sampling is that roots, stones and other materials will not allow for good penetration. Different sample locations may have to be selected to collect samples.

5.3 Thin-Walled Sampler/Corer

The thin-walled sampler/corer is the least used of the common sampling devices. It works similar to an auger; however, it has a much smaller diameter and the core is visible from the side of the sampler barrel. This device is even more prone to refusal than the bucket auger. This device works well in moist soils with small grain sizes.

5.3.1 Corer Sampling Procedures

1. Decontaminate the augers before collecting the first sample.
2. Cut a 12-inch hole into plastic sheeting around sample location.
3. Discard debris and other surface material.
4. Place the thin-walled sampler perpendicular to the ground and twist the AT@ handle in a clockwise rotation until desired depth is achieved.
5. Retrieve the specified sample volume. Any additional sample volume can be returned to the sample hole.
6. Place the sample volume into a homogenization pan and mix thoroughly.
7. Place the sample in the designated sample container.
8. Label the sample container. Sample labels and tags are to be filled out with a permanent marker only (ball point pen ink bleeds when wet). Use a grease pencil to fill out labels and tags for samples to be analyzed for VOCs. Additionally, it is recommended that the bottom of the sample jar be marked with the time of collection, the sample location, and the sampler=s initials, in case the labels are rendered illegible.
9. Place the sample jar in an appropriate sized Ziploc7 bag.
10. Place the sample on ice. Generally, soil samples do not require any preservative; however, unless told otherwise, it is always good practice to put samples on ice.
11. Decontaminate the auger using the proper procedure (see Section 6.0 Decontamination of Sampling Equipment).
12. Complete the chain-of-custody form.
13. Repeat steps 1-12 for each sample location.

6.0 DECONTAMINATION OF SAMPLING EQUIPMENT

This procedure is arguably the most important step in sound sample collection. Poor decontamination will result in cross-contamination and inaccurate sample results. The adequacy of the decontamination is generally tested by daily rinsate blanks. The following procedures pertain to the three sampling devices noted in this SOP.

1. Determine an area to be used as a decontamination station and lay plastic sheeting down.
2. Fill and pressurize a garden sprayer with distilled water. Fill one decontamination bucket with distilled water and Alconox7. Fill and pressurize another garden sprayer (if available) with de-ionized water for the final rinse.
3. Brush off soil residue from the sampling device with a dry brush.

4. Quickly spray the sampling device with the garden sprayer to loosen the soil before placing the sampling device into the soapy water.
5. Put the sampling device into soapy water bucket. Remove soil residue with a long-handled brush, toilet brush or cleaning device. Spray off soap residue with distilled water.
6. Place the sampling device into another bucket and spray the sampling device thoroughly again with distilled water.
7. Final rinse the sampling device with de-ionized water. If solvents or weak acids are used for the final rinse, see START SOP No. 406, Investigative Derived Waste.
8. If stainless steel scoops are used, use multiple scoops so that decontamination does not have to be after every hole.
9. Repeat steps 1-7.
10. Contact the OSC to determine if decontaminated water may be dumped on site. Be sure to address this issue before the sampling event occurs. All PPE and other refuse generated can be disposed as solid industrial waste.

7.0 REFERENCES

EPA. 1991. *Compendium of Emergency Response Team (ERT) Soil Sampling and Surface Geophysic Procedures.* Office of Solid Waste and Emergency Response, Washington, DC. EPA/540/P-91/006.

EPA 1991. *Removal Program Representative Sampling Guidance.* Volume 1 - Soil. Office of Solid Waste and Emergency Response, Washington, DC. 9630.4-10 P892-963408.

WESTON® (Roy F. Weston, Inc.) 1993. *Standard Practices Manuel for Soil Sampling With a Spade, Scoop and Stainless Surface Soil Sampler Auger and Tube Sampler.* West Chester, PA.

Attachment: 1

ATTACHMENT 1

SOIL SAMPLING DATA SHEET

Sample Number(s): _____
Date: _____
Time: _____

Soil Sampling Data Sheet

Site Name: _____ **Sampler:** _____
Sample Depth: ____ Surface (0-0.5 ft) _____ Shallow (0.5-5.0 ft)
Sample Method(Circle One):_____Scoop (2,3,4,5,6,7,8,A,C,+) ____ Hand Auger(2,3,4,5,6,7,B,+,-)
_____Slide-Hammer (1,2,3,4,5,6,7,8,A,B,+,-) ____ Open Tube (A,+,-)
_____Split/Solid Tube (1,2,3,4,5,6,7,8,A,B,-) ____ Thin-Wall Tube(8,A,-)

Preferred Methods

1 - Volatiles	5 - PCBs	A - Grab	+ - Surface
2 - Semi-Volatiles	6 - TPH	B - Composite (Vertical)	- - Shallow
3 - Primary Metals	7 - Rad	C - composite (Areal)	
4 - Pesticides	8 - Geotechnical		

Soil Description (Munsell): Chart _____ Value _____ Hue _____
Grain Size and Distribution:

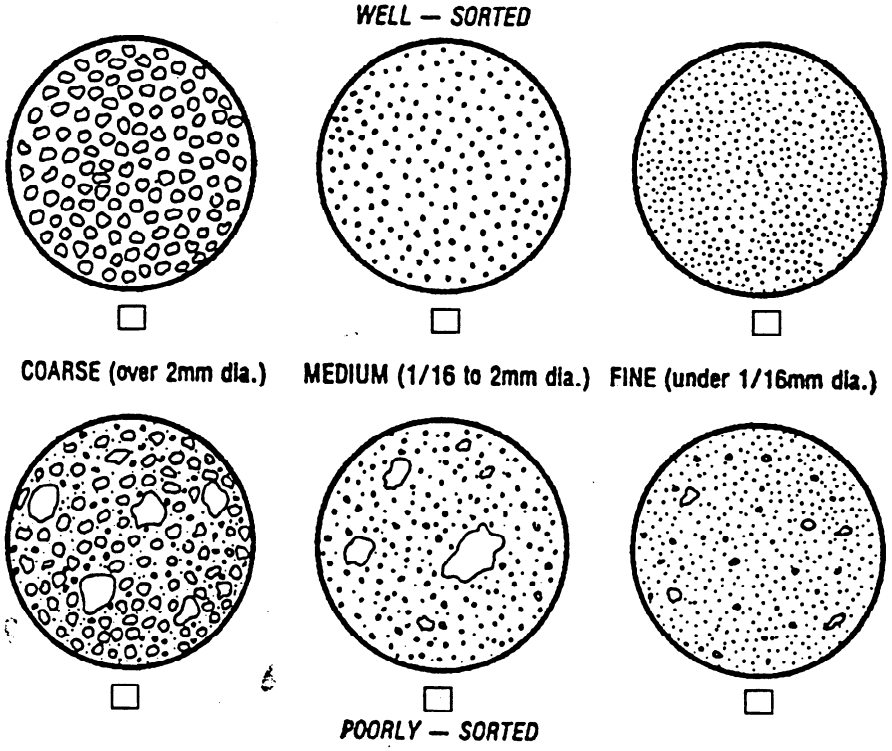

Collection of Indoor Dust Samples from Carpeted Surfaces for Chemical Analysis Using a Nilfisk GS-80 Vacuum Cleaner

Collection of Indoor Dust Samples from Carpeted Surfaces for Chemical Analysis Using a Nilfisk GS-80 Vacuum Cleaner

TABLE OF CONTENTS

1.0 SCOPE AND APPLICATION

2.0 METHOD SUMMARY

3.0 SAMPLE PRESERVATION, CONTAINERS, HANDLING, AND STORAGE

4.0 INTERFERENCES AND POTENTIAL PROBLEMS

5.0 EQUIPMENT/APPARATUS

5.1 Equipment List

6.0 REAGENTS

7.0 PROCEDURES

7.1 Preparation
7.2 Calibration Procedures
7.3 Field Operations
7.4 Laboratory Operations
7.5 Sampling Train Decontamination

8.0 CALCULATIONS

9.0 QUALITY ASSURANCE/QUALITY CONTROL

10.0 DATA VALIDATION

11.0 HEALTH AND SAFETY

12.0 REFERENCES

1.0 SCOPE AND APPLICATION

The purpose of this Standard Operating Procedure (SOP) is to define the procedures for collection of carpet-embedded dust samples that can then be analyzed for lead, pesticides, or other chemical compounds and elements. This procedure is applicable for the collection of samples on a variety of surfaces.

These are standard (i.e., typically applicable) operating procedures which may be varied or changed as required, dependent upon site conditions, equipment limitations or limitations imposed by the procedure. In all instances, the ultimate procedures employed should be documented and associated with the final report.

Mention of trade names or commercial products does not constitute U.S. Environmental Protection Agency (U.S. EPA) endorsement or recommendation for use.

2.0 METHOD SUMMARY

Sample collection is performed utilizing the Nilfisk GS-80 vacuum cleaner equipped with a high efficiency particulate air (HEPA) filter. A diagram of the Nilfisk GS-80 vacuum cleaner is presented in Figure 1. Soil and other particulate matter with aerodynamic diameters of approximately 5-micrometers (m) and larger, that are embedded within the carpet, are collected and returned to the laboratory for sieving and analysis.

3.0 SAMPLE PRESERVATION, CONTAINERS, HANDLING AND STORAGE

Following collection of the sample into a dedicated collection bag, the bag is removed from the vacuum cleaner and placed into a 32-ounce glass jar or a zip-lock plastic bag. Storage of the samples at ambient temperature is appropriate for samples that will be analyzed only for metals.

Note: Samples for organic analysis should be maintained at approximately 4^0C.

4.0 INTERFERENCES AND POTENTIAL PROBLEMS

There are no known interferences with this method.

5.0 EQUIPMENT/APPARATUS

5.1 Equipment List

-Nilfisk Model GS-80 vacuum cleaner
-Two meter folding ruler or similar device
-Masking tape
-Clean aluminum foil
-Shaker sieve, as specified in ASTM D4222, with 100-mesh screen
-Analytical balance [sensitive to a minimum 0.1 milligram (mg) and weighing range of 0.1mg - 1000 grams(g)].
-Distilled water
-Methanol
-Kimwipes ™ or other laboratory tissue

-Vacuum collection bags
-Bottle brush
-Scrub brush
-Polyliners
-32-ounce glass jars

6.0 REAGENTS

Methanol and distilled water are required for sampling train cleaning and decontamination.

7.0 PROCEDURES

7.1 Preparation

The overall sampling strategy should be designed to address the goals of the investigation. Users should consider factors such as foot traffic volume, types of activities, and proximity to potential sources. The sampling strategy should be described in the Quality Assurance Work Plan (QAWP) prepared prior to the sampling event. The ideal sampling locations are those areas that conform with the overall sampling strategy. For example, protocol may require the selection of a carpeted area for sampling where small children play or are likely to play.

1. Determine the extent of the sampling effort, the sampling methods to be employed, the amount of dust needed to reach the desired detection limit and the types and amounts of equipment and supplies needed.

2. Obtain and organize the necessary sampling and monitoring equipment.

3. Decontaminate or pre-clean equipment, as specified in Section 7.5, and ensure that it is in working order.

4. Prepare schedule and coordinate with staff, client, regulatory agency, as appropriate.

5. Perform a general site survey prior to site entry in accordance with the site-specific Health and Safety Plan.

6. Measure the area to be sampled and outline it using masking tape or other appropriate methods. Draw a diagram of the room(s) where the sample(s) were taken, locating the sampled area(s).

7.2 Calibration Procedures

The Nilfisk GS-80 vacuum cleaner has no flow devices that need calibration prior to sampling. The sampling train shall be thoroughly inspected to ensure that it has been cleaned, properly assembled, and complete.

7.3 Field Operations

1. Prior to sample collection at the location to be sampled, complete a sample data

sheet, recording all requested information and sketch the area to be sampled. A sample data sheet is provided in Figure

2. Select a sampling area according to the established protocol defined in the QAWP. In most cases, three rooms per floor are selected for sampling in each building. Each sample is collected with a dedicated sampling train that has been properly assembled, cleaned, and decontaminated to ensure sample integrity. The size/weight of each sample is dependent on the goals and objectives of the sampling event, the analyses requested, and the desired method detection levels (MDLs). A 100-gram sample is highly desirable if multiple analyses (metals, pesticides, etc.) are requested. A minimum 5-10-gram sample is required for metal analysis.

3. Utilizing the 2-meter folding ruler or any other measuring device, outline and mark the recommended 1-m^2 portion of the carpet to be sampled.

4. Begin the sample collection at one corner of the delineated sample area, moving the sampler back and forth four times over a strip running in a straight line between the defined sampling area edges. The width of the strip is defined by the width of the sampling nozzle. After completing the first strip, angle over to the second strip gradually on the next pass, again completing four double passes.

5. Continue sampling the area delineated until an adequate sample is collected. To determine if adequate sample weight will be collected, one must use visual judgement or perform the finger judgement test on the carpet to judge the dust loading of the carpet and make a decision on whether to sample the recommended 1-m^2 area or a larger area. If sampling a larger area, measure the area accurately and document.

6. Wearing surgical gloves, make sure to tap with your hand on the nozzle inlet to dislodge any dust remaining in the nozzle or the hose. This procedure will ensure complete sample recovery. Turn off the vacuum cleaner and allow to sit undisturbed for at least 30 seconds. Unsnap the two vacuum container clips to access the inside of the container. Remove the polyliner and the vacuum collection bag within it. Then seal off the polyliner with the vacuum collection bag inside, and transfer to a properly labeled 32-oz. glass jar or plastic bag. Document the sample and store for shipping to the laboratory.

7.4 Laboratory Operations

Upon arrival at the laboratory, recovery of the dust samples from the GS-80 dedicated collection bags is accomplished by the following procedure:

1. Select a clean working area in the laboratory where recovery of the samples is to be performed (a 4-foot by 4-foot area will be sufficient). Make sure that the following equipment/apparatus is available, assembled, and in good working condition:

-Shaker sieve (No. 100), as specified in ASTM D-422 with particle size separation of 150 m. A complete set consists of

three components: the cover, the screen, and the receiver pan. The receiver pan must be pre-weighed and its weight recorded.

-Sieve shaker for mechanical sieving. Models readily available are CSC Scientific Company, Inc. Catalog No. 18480 and Thomas Scientific Catalog No. 8324-A10 (Tel 800 345-2100).

-Analytical balance sensitive to a minimum 0.1 milligrams (mg) and weighing range of 0.1 mg to 1000 grams (g).

-Surgical gloves. Thomas Scientific Catalog No. 5761-W14.

-Disposable dust mask. Thomas Scientific Catalog No. 8055-M20.

-Camel=s Hair Brush. Fisher Scientific Catalog No. 03-655.

-Clean aluminum foil.

-KimwipesJ or other laboratory tissue.

2. Wearing clean surgical gloves to handle the bags and a dust mask for dust protection, retrieve the vacuum collection bags from the 32-ounce glass jars used to transport the bags from the field to the laboratory.

3. Empty the contents of the bag into the No. 100-mesh sieve screen through the bag opening. Complete this operation by removing the plastic adaptor from the collection bag inlet. Shake the bag as necessary to ensure all the contents have been transferred through the screen to the receiver pan.

4. Place the cover on the sieve screen and manually or mechanically shake the sieve for a minimum of 5 minutes and a maximum of 10 minutes until all the fine dust particles are collected in the bottom receiver pan. If manual shaking is performed, the directions in D-422 of ASTM must be followed: AConduct the sieving operation by means of a lateral and vertical motion of the sieve, accompanied by a jarring action in order to keep the sample moving continuously over the surface of the sieve. Continue sieving until not more than 1 mass percent of the residue on a sieve passes that sieve during 1 minute of sieving@.

5. If mechanical shaking is performed, set up the recommended sieve shaker on an even and stable surface. Proceed with the sieving operation following directions in the manufacturer's manual.

6. Re-weigh the receiving pan utilizing the analytical balance. The difference in weight is the weight of the sieved sample. If total weight of material is desired, the coarse material remaining on top of the sieve must be collected on a pre-weighed sheet of aluminum foil, re-weighed and the weight added to the weight of the sieved sample.

7. Transfer the sieved sample from the receiving pan to an 8-ounce wide mouth glass jar. Use the camel's hair brush to ensure complete transfer of the sample. Cap glass jar and secure sample.

8. Document each sample. Each sample must be provided with the following information: identification number, date of sampling, location, analysis requested. Each sample must be recorded into a chain-of-custody form before delivery to the analytical laboratory.

9. Before processing the next sample, thoroughly wipe clean the shaker sieve set with a KimwipeJ Wait until dry. Repeat steps 1 through 7.

7.5 Sampling Train Decontamination

To decontaminate the sampling trains, move them to a well ventilated area and perform the following:

1. Assemble one of the sampling trains to be used as the decontamination unit for decontaminating the nozzles, hoses, and wands. This unit must be provided with a clean polyliner and dust bag.

2. With the vacuum cleaner turned on and wearing clean surgical gloves, the nozzles, wands, and hoses are decontaminated using the bottle brush to remove any accumulated dust in the hose and nozzle. Make sure to tap with your hand on the nozzle to remove any visible dirt that have accumulated and use the scrub brush to remove any hair or fibers entangled on the nozzle=s brush . When the nozzle is considered to be clean, remove and spray with reagent grade methanol and allow to air dry on a clean surface. The wand and hose are then cleaned with the bottle brush. Make sure to tap with your hand on the wand inlet while cleaning with the bottle brush to remove any visible dirt. Repeat this procedure to decontaminate the other nozzles, wands, and hoses.

3. Pull out the dirty dust bag from the decontamination unit and wipe clean the inside of the container with distilled water. Do the same to the other containers. Spray the inside of the containers with methanol and allow to air dry. If decontaminating in between homes, wipe cleaning the inside of the containers with distilled water is sufficient.

8.0 CALCULATIONS

The dust weight calculations for the final sieved dust fraction is performed in accordance with ASTM Method D 422. Dividing the final dust weight by the area sampled (expressed in m^2) provides dust loading in grams per squared meter (g/m^2). When the analysis results are received, the loading of analyte per square meter of carpet area (ug/m^2) can be calculated in the same way. Analysis will also provide mg/kg concentration. If total (gross) dust loading of the sampled area needs to be calculated, the total dust weight before sieving must be obtained. The total dust weight is divided by the area sampled to obtain total dust loading per square meter.

9.0 QUALITY ASSURANCE/QUALITY CONTROL

There are no specific quality assurance activities which apply to the implementation of these procedures. However, the following general QA procedures apply:

1. All data must be documented on field data sheets or within site logbooks.

2. All instruments must be operated in accordance with operating instructions as supplied by the manufacturer, unless otherwise specified in the work plan. Equipment checkout and calibration activities must occur prior to sampling/operation and they must be documented.

10.0 DATA VALIDATION

Results of the quality control samples will be evaluated for contamination. This information will be utilized to qualify the environmental sample results accordingly with the project's data quality objectives.

11.0 HEALTH AND SAFETY

When working with potential hazardous materials, follow U.S. EPA, OSHA and corporate health and safety procedures.

12.0 REFERENCES

American Society For Testing And Materials, Standard Practice for Collection of Dust from Carpeted Floor for Chemical Analysis, Designation D 5438-93, Reprinted from the Annual Book of ASTM Standards, Philadelphia, PA.

American Society For Testing And Materials, Standard Test Method for Particle Size Analysis of Soils,Designation D 422-63, Reprinted from the Annual Book of ASTM Standards, Philadelphia, PA.

Instructions for Use-Nilfisk Model GS 80, Nilfisk of America, Inc.,Malvern, PA (1987).

SUPERFUND TECHNICAL ASSESSMENT RESPONSE TEAM
STANDARD OPERATING PROCEDURE

SOP 101
LOGBOOK DOCUMENTATION

1.0 INTRODUCTION

The purpose of this Standard Operating Procedure (SOP) is to provide Weston Solutions, Inc. (WESTON®), Superfund Technical Assessment Response Team (START) members with a step-by-step guide for logbook documentation. Note: A factual and objective record of contractor and safety activities is critical for future litigation.

2.0 LOGBOOKS

2.1 Personal Logbooks

All START members are required to document daily office activities in personal logbooks. Information in these logbooks shall be factual and objective and must be kept current at all times. Entries should include daily events, such as specific technical directive document (TDD) activities, task numbers, phone calls and meetings. It is important to note that all personal logbooks are property of WESTON7 and may be reviewed by management at any time.

2.2 Site Logbooks

All START members are required to document site activities in site logbooks which are required of all active U.S. Environmental Protection Agency (USEPA) removal/enforcement sites. Information in these logbooks shall be factual and objective and must be kept current at all times. Entries should include daily events, such as site activities, safety meetings, names of personnel entering/exiting site, sampling data, etc. All site logbooks are the property of USEPA and must remain with the site file. Site logbooks will be maintained by the Site Leader. Information may be entered into the site logbook by the appropriate team member. Entries will be made in waterproof ink.

3.0 SPECIFIC PROTOCOL

Adhere to the following protocol for both personal and site logbooks:

1. Print the site name, volume number, and coverage dates on the site logbook cover and inside cover in black ink.
2. Write the author=s name and volume number on the personal logbook cover and inside cover.
3. Write Weston Solutions, Inc., as well as the mailing address and phone number on the inside covers of both the site and personal logbooks.
4. Write in between margins only.
5. Fill in all pages in all logbooks.

6. Place a single line through mistakes and initial each one.
7. Make sure that the logbook pages are pre-numbered, or number each page when a new logbook is received.
8. Write late notes/entries as soon as possible and identify this entry as such.
9. Be objective for all logbook entries.

Personal logbooks will contain the following information:

1. Employee=s name, work address, and telephone number.
2. Full names and affiliations for all persons cited in the logbook. *Be sure to check the spelling of names and affiliations for accuracy.*
3. Sequence of daily events.
4. Task numbers, full dates (i.e. 12 January 2008), and military time (i.e. 0800).
5. Initialed daily entries.

Site logbooks will contain the following information:

1. The name and location of the site.
2. Dates of sample collection or event.
3. Time of sample collection or event.
4. Field observations.
5. Numbers and types of samples collected and sample identification numbers.
6. Description of sampling methodology by referenced Standard Operating Procedures.
7. Type(s) of laboratory analyses requested.
8. Phone calls and/or contacts with people at the site on a daily basis.
9. Name of subcontractor and excavation equipment.
10. Any modifications in work activities, i.e., sampling locations and reasons.
11. Visual description of samples and test pits as required. Includes color, texture, moisture, and other physical soil characteristics.
12. Names of Site Leader and Assistant Site Leaders.
13. Site sketches if appropriate. Draw a box around the sketch to separate the sketch from the text in the logbook.
14. Levels of personal protective equipment worn for tasks performed.
15. Weather conditions on a daily basis.
16. Significant changes during the day (i.e., stoppage of work during a lightning storm).

4.0 REFERENCES

WESTON® (Roy F. Weston, Inc.). 1993. *Standard Operating Practices* (SP) *Manual*. SP No. 16-11-016, “Test Pit Excavation and Sampling”. West Chester, PA.

SUPERFUND TECHNICAL ASSESSMENT RESPONSE TEAM
STANDARD OPERATING PROCEDURE

SOP 304
SUBSURFACE SOIL SAMPLING

1.0 INTRODUCTION

The purpose of this Standard Operating Procedure (SOP) is to provide Weston Solutions, Inc. (WESTON7), Superfund Technical Assessment Response Team (START) members with a step-by-step guide for collecting representative subsurface soil samples.

2.0 MATERIALS REQUIRED

Equipment requests should be completed and issued to the equipment warehouse at least one week in advance of site operations. *Pre-assemble all sampling equipment that requires assembly prior to departure* (especially split-spoon apparatus).

Equipment for subsurface sampling is as follows:

- X Personal protective equipment (as specified in the Health and Safety Plan)
- X Sampling plan
- X Maps/sketches
- X Compass
- X Tape measure (up to 300 ft)
- X Survey stakes/flags
- X Aluminum homogenization trays or stainless steel bowls
- X Sample jars
- X Logbook
- X Sample labels/tags
- X Chain of custody forms and custody seals
- X Field data sheets
- X Coolers
- X Ice
- X Decontamination supplies (brushes, baskets, garden sprayer, phosphate-free soap, de-ionized water, etc.)
- X Ziploc7 bags
- X Plastic sheeting
- X Paper towels
- X Ball-point pen
- X Permanent marker
- X Grease pencil
- X Camera with film or digital camera
- X Plastic sample scoops

- X Stainless steel trowels
- X Plastic garbage bags
- X Scissors
- X Screw auger
- X Bucket auger
- X Post-hole auger
- X T-handle
- X Extension rods
- X Split spoon halves (2 sets) with shoes (2)
- X Plastic sample baskets
- X Adapter
- X Drive head
- X Bit(s)
- X Extension (optional)
- X Slam bar (manual sampling only)
- X Slam hammer (manual sampling only)
- X Extraction head
- X Gas can
- X Generator oil
- X Generator
- X Jackhammer (rental)
- X Heavy duty lift-jack
- X Wheel barrow
- X Ground fault interrupter (GFI)
- X 24-inch pipe wrenches (2)
- X Manual sledge hammer
- X Rubber mallet
- X Spray-lubricant (ingredients must not interfere with analysis parameters)
- X Shovel/spade
- X Roofing nails
- X Tool box (vice grips, adjustable wrenches, pliers, channel locks, etc.)
- X Back support belt(s)

3.0 SAFETY PRECAUTIONS

Due to unknown constituents of the soil media, the exposure potential for personnel exists and must be of primary concern. Before any soil sampling is performed, a Health and Safety Plan (HASP) must be approved by the START Safety Officer.

1. Follow the HASP safety schedule.
2. Determine the appropriate levels of protection to be worn by personnel.
3. Conduct air monitoring in the breathing zones and screen the sample location holes once they are selected.
4. Ensure that equipment is properly decontaminated and is in working condition prior to mobilization to the site.
5. Coordinate efforts and staffing with the client or agency with which you are working.

4.0 SAMPLING PROCEDURES

4.1 Sampling Preparation

1. Perform a general site reconnaissance to verify actual site conditions consistent with the HASP.
2. Identify and mark all sampling locations using sample flags or stakes as specified in the sampling plan. *All sample locations should be measured, documented, and mapped in reference to a GPS locations or permanent marker, i.e. specified utility pole, benchmark, property marker, etc.* Note: It is often convenient (for residential properties, etc.) to hammer roofing nails into wooden stakes which can be driven below the surface; therefore, a hand-held metal detector can be used to find exact sample locations.
3. Make sure all sampling equipment is properly decontaminated prior to sampling.
4. Notify utility companies to check sampling areas for underground utilities prior to digging, boring, or coring operations. Most states require 7-day notice, and have a toll-free number to arrange a single, all-inclusive, free inspection.

4.2 Auger Sampling

1. Wear appropriate personal protective equipment (PPE), as defined by the site Health and Safety Plan (HASP). *Remember that a clean pair of sample gloves must be worn for each sample collected.*
2. Assemble the auger unit, if required.
3. Clear the area to be sampled of any surface debris.
4. Spread plastic sheeting near the sample location to allow for easy accessibility and to prevent equipment contamination.
5. Remove surface soil to expose the desired depth of soil to be sampled using a screw auger, bucket auger, post-hole auger, power auger, shovel, or backhoe. The sampling device (auger, split-spoon, etc.) can be marked with a grease pencil.
6. Stage removed soil on plastic sheeting near the hole. *Special care should be taken to avoid allowing surface soil to cross-contaminate soil at the desired sampling depth.*
7. Use auger extension rods to sample to depths up to approximately 9 feet.
8. Use a *decontaminated* auger to collect sample(s) after digging or boring to the desired sample depth. The best way to retrieve desired soil, while avoiding cross-contamination, is with a bucket auger. Each 6-inch bucket auger will hold approximately 3-4 inches of augered (Afluffed@) soil.
9. Decontaminate the augers after each sample-depth is collected. Note: Discarding the top inch of soil from the retrieved sample also reduces cross-contamination.
10. Transfer a portion of the sample directly into an appropriate, labeled sample container(s) with a stainless steel trowel if volatile organic analysis is to be performed.

11. Deposit sample into a homogenization tray or bowl for analysis other than volatile organics and thoroughly mix the soils to obtain a homogenous, representative sample.
12. Place homogenized sample into an appropriate, labeled sample container with a plastic scoop or stainless steel trowel, depending on the requested analysis.
13. Record all field notes on field data sheets and in the site logbook as specified in the sampling plan. The sample location should reference a GPS location or permanent marker, and should be mapped and described in the field notes.
14. Photograph sample locations with landmarks in view. Keep in mind that sample locations may need to be referenced in the future, often years after your sampling event.
15. Abandon the sample hole(s) in accordance with state regulations. Generally, holes can be backfilled with removed soil materials.
16. Decontaminate all sampling equipment in accordance with SOP No. 301 Decontamination Procedures.

4.3 Split Spoon Sampling

1. Wear appropriate personal protective equipment (PPE), as defined by the site HASP. *Remember that a clean pair of sample gloves must be worn for each sample collected.*
2. Assemble cleaned spoon halves by aligning threads, inserting a clean sample basket, and screwing on the shoe.
3. Screw on the appropriate adapter for a slam bar or jackhammer apparatus. For manual sample collection, attach the slam bar to the adapter. For jackhammer-driven sample collection, attach the drive head to the adapter.
4. Clear the area to be sampled of any surface debris.
5. Spread plastic sheeting near the sample location.
6. Remove surface soil to expose the desired depth of soil to be sampled using a screw auger, bucket auger, post-hole auger, power auger, shovel, or backhoe.
7. Stage removed soil on plastic sheeting near the hole. *Special care should be taken to avoid allowing surface soil to cross-contaminate soil at desired sampling depth.*
8. Use a *decontaminated* split-spoon to collect the sample(s) after digging or boring to desired sample depth.
9. For the manual collection of a sample, slide the slam hammer over the slam bar. Slam the hammer repeatedly until the core is driven to desired depth.
10. For jackhammer-facilitated sampling, attach and lock the bit to the jackhammer. Carefully lift the jackhammer, slide the bit into the adapter, and drive the core to the desired depth. One person should support the spoon halves and the adapter during coring operations to insure that the apparatus remains vertical and that individual parts do not come unscrewed.

11. Attach the appropriate extraction head to the in-ground split spoon apparatus.
12. Using a heavy-duty lift-jack, carefully retrieve the sample core. This step usually requires two people: one to hold the jack in a vertical position while the other operates the jack.
13. Lay the core on clean plastic sheeting after the core is retrieved and carefully unscrew the extraction head and the adapter.
14. Unscrew the shoe, but *make sure the split spoon core does not open*. Often, pipe wrenches are required to unscrew the shoe.
15. Lay out *labeled* homogenization tray or bowl alongside the sample core.
16. Open the split spoon and take care not to spill or disturb the sample core.
17. Measure the desired soil depths.
18. Use clean gloves and a clean polyethylene scoop to retrieve each sample. *Do not slide the soil down the spoon to retrieve it*. Instead, use the scoop to carefully lift the sample into a homogenization tray or bowl.
19. Transfer a portion of the sample directly into an appropriately labeled sample container(s) with a stainless steel trowel if volatile organic analysis is to be performed.
20. Deposit the sample into a homogenization tray or bowl for analysis other than volatile organics, and thoroughly mix the soils to obtain a homogenous, representative sample.
21. Place the homogenized sample into an appropriate, labeled sample container using a plastic scoop or stainless steel trowel, depending on the requested analysis.
22. Record all field notes on field data sheets and the site logbook, as specified in the sampling

plan. The sample location should reference a GPS locations or permanent marker, and should be mapped and described in the field notes.

23. Photograph sample locations with landmarks in view. Keep in mind that sample locations may need to be referenced in the future, often years after your sampling event.
24. Abandon the sample hole(s) in accordance with state regulations. Generally, holes can be back filled with removed soil materials.
25. Decontaminate all sampling equipment in accordance with START SOP No. 301 Decontamination Procedures.

5.0 REFERENCES

EPA. 1991. *Compendium of Emergency Response Team (ERT) Waste Sampling Procedures.* Office of Solid Waste and Emergency Response, Washington, DC. EPA/540/P-91/008.

EPA 1991. *Removal Program Representative Sampling Guidance.* Volume 1 - Soil. Office of Solid Waste and Emergency Response, Washington, DC. 9630.4-10 P892-963408.

WESTON[7] (Roy F. Weston, Inc.) 1993. *Standard Practices Manuel for Soil Sampling With a Spade, Scoop and Stainless Surface Soil Sampler Auger and Tube Sampler.* West Chester, PA.

Attachment: 1

ATTACHMENT 1

SOIL SAMPLING DATA SHEET

Sample Number(s): _____
Date: _____
Time: _____

Soil Sampling Data Sheet

Site Name: _____ **Sampler:** _____
Sample Depth: ____ Surface (0-0.5 ft) _____ Shallow (0.5-5.0 ft)
Sample Method(Circle One):_____Scoop (2,3,4,5,6,7,8,A,C,+) ____ Hand Auger(2,3,4,5,6,7,B,+,-)
_____Slide-Hammer (1,2,3,4,5,6,7,8,A,B,+,-) ____ Open Tube (A,+,-)
_____Split/Solid Tube (1,2,3,4,5,6,7,8,A,B,-) ____ Thin-Wall Tube(8,A,-)

Preferred Methods

1 - Volatiles	5 - PCBs	A - Grab	+ - Surface
2 - Semi-Volatiles	6 - TPH	B - Composite (Vertical)	- - Shallow
3 - Primary Metals	7 - Rad	C - composite (Areal)	
4 - Pesticides	8 - Geotechnical		

Soil Description (Munsell): Chart _____ Value _____ Hue _____
Grain Size and Distribution:

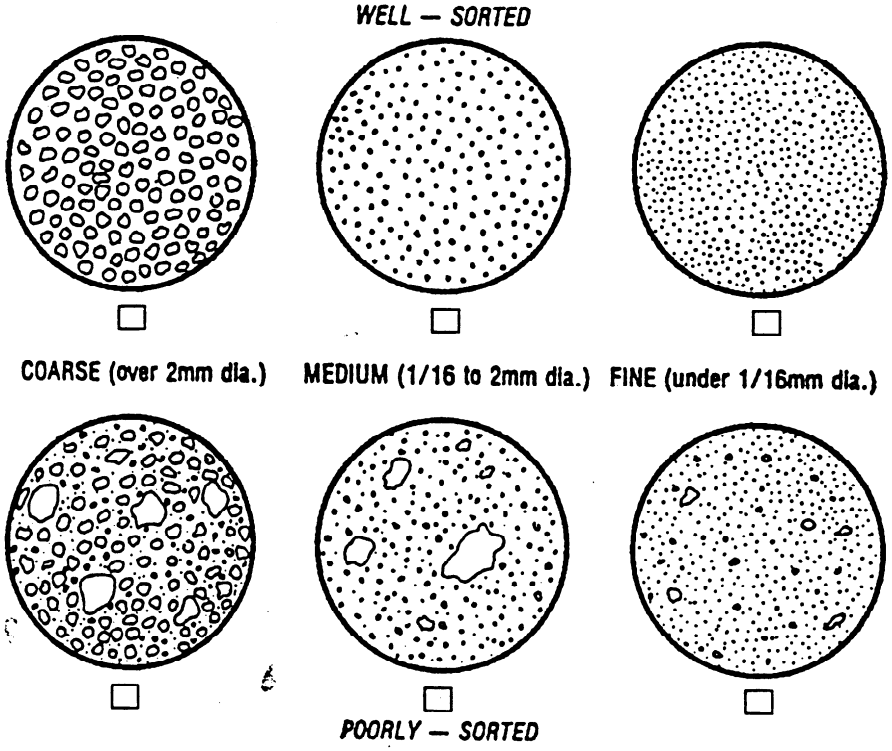

MODEL *p*DR-1000AN/1200

*personal*DATARAM

PARTICULATE MONITOR

INSTRUCTION MANUAL
P/N (100181-00)

THERMO ELECTRON CORPORATION
ENVIRONMENTAL INSTRUMENTS
27 FORGE PARKWAY FRANKLIN MASSACHUSETTS 02038

(866) 282-0430 Toll Free
(508) 520-0430 International
(508) 520-1460 Fax

www.thermo.com/aqp

Apr2005

© 2003 Thermo Electron Corporation. All rights reserved. Thermo Electron Corporation, question everything, and Analyze. Detect. Measure. Control are trademarks of Thermo Electron Corporation. All other product names and logos are the property of their respective owner.

Specifications, terms and pricing are subject to change. Not all products are available in all countries. Please consult your local sales representative for details.

7.0 OPERATING MODES **21**
7.1 Start-Up Mode 21
7.2 Ready Mode 21
7.3 Run and Logging Mode 21
7.3.1 Data Logging 22
7.3.2 Clearing Memory 22
7.3.3 Run Mode Display and Commands 22
8.0 OPERATION **23**
8.1 Start-Up 23
8.2 Setting Up For A Run 24
8.3 Measurement Run Procedure 25
8.4 Abbreviated Run Start/Stop Instructions 27
8.5 Resetting Procedure 27
9.0 COMMUNICATIONS WITH COMPUTER **28**
9.1 Hardware and Software Requirements 28
9.2 Software Installation Procedure 28
9.3 Communications Between *personal*DataRAM and Computer 29
9.4 Real-Time RS-232 Output 30
10.0 ANALOG SIGNAL OUTPUT **31**
10.1 Analog Output Description 31
10.2 Analog Output Connection 31
11.0 ALARM **32**
11.1 Alarm Description and Operation 32
11.2 Alarm Output 32
11.3 Remote Alarm Unit 33
12.0 MAINTENANCE **33**
12.1 General Guidelines 33
12.2 Cleaning of Optical Sensing Chamber 33
12.2.1 Model *p*DR-1000AN 33
12.2.2 Model *p*DR-1200 34
12.3 Cyclone Cleaning (Model *p*DR-1200 only) 34
13.0 CALIBRATION **34**
13.1 Factory Calibration 34
13.2 Field Gravimetric Calibration 35
13.3 Scattering Coefficient Calibration 36
13.4 Internal Span Check 36

14.0 PARTICLE SIZE CLASSIFICATION (Model *p*DR-1200 only) 37
14.1 Size Fractionated Monitoring 37
14.2 Particle Sizing 37

15.0 CONVERSION BETWEEN *personal*DataRAM VERSIONS 40
15.1 Conversion procedure from *p*DR-1000AN to *p*DR-1200 40
15.2 Conversion procedure from *p*DR-1200 to *p*DR-1000AN 41

16.0 SEQUENCE OF KEYSTROKES AND SCREENS 42

17.0 SERVICE LOCATIONS 46

WARRANTY

Seller warrants that the Products will operate substantially in conformance with Seller's published specifications, when subjected to normal, proper and intended usage by properly trained personnel, for 13 months from date of installation or 12 months from date of shipment, whichever is less (the "Warranty Period"). Seller agrees during the Warranty Period, provided it is promptly notified in writing upon the discovery of any defect and further provided that all costs of returning the defective Products to Seller are pre-paid by Buyer, to repair or replace, at Seller's option, defective Products so as to cause the same to operate in substantial conformance with said specifications. Replacement parts may be new or refurbished, at the election of Seller. All replaced parts shall become the property of Seller. Shipment to Buyer of repaired or replacement Products shall be made in accordance with the provisions of Section 5 above. Lamps, fuses, bulbs and other expendable items are expressly excluded from the warranty under this Section 8. Seller's sole liability with respect to equipment, materials, parts or software furnished to Seller by third party suppliers shall be limited to the assignment by Seller to Buyer of any such third party supplier's warranty, to the extent the same is assignable. In no event shall Seller have any obligation to make repairs, replacements or corrections required, in whole or in part, as the result of (i) normal wear and tear, (ii) accident, disaster or event of force majeure, (iii) misuse, fault or negligence of or by Buyer, (iv) use of the Products in a manner for which they were not designed, (v) causes external to the Products such as, but not limited to, power failure or electrical power surges, (vi) improper storage of the Products or (vii) use of the Products in combination with equipment or software not supplied by Seller. If Seller determines that Products for which Buyer has requested warranty services are not covered by the warranty hereunder, Buyer shall pay or reimburse Seller for all costs of investigating and responding to such request at Seller's then prevailing time and materials rates. If Seller provides repair services or replacement parts that are not covered by the warranty provided in this Section 8, Buyer shall pay Seller therefore at Seller's then prevailing time and materials rates.
ANY INSTALLATION, MAINTENANCE, REPAIR, SERVICE, RELOCATION OR ALTERATION TO OR OF, OR OTHER TAMPERING WITH, THE PRODUCTS PERFORMED BY ANY PERSON OR ENTITY OTHER THAN SELLER WITHOUT SELLER'S PRIOR WRITTEN APPROVAL, OR ANY USE OF REPLACEMENT PARTS NOT SUPPLIED BY SELLER, SHALL IMMEDIATELY VOID AND CANCEL ALL WARRANTIES WITH RESPECT TO THE AFFECTED PRODUCTS.

THE OBLIGATIONS CREATED BY THIS SECTION TO REPAIR OR REPLACE A DEFECTIVE PRODUCT SHALL BE THE SOLE REMEDY OF BUYER IN THE EVENT OF A DEFECTIVE PRODUCT. EXCEPT AS EXPRESSLY PROVIDED IN THIS SECTION 8, SELLER DISCLAIMS ALL WARRANTIES, WHETHER EXPRESS OR IMPLIED, ORAL OR WRITTEN, WITH RESPECT TO THE PRODUCTS, INCLUDING WITHOUT LIMITATION ALL IMPLIED WARRANTIES OF MERCHANTABILITY OR FITNESS FOR ANY PARTICULAR PURPOSE. SELLER DOES NOT WARRANT THAT THE PRODUCTS ARE ERROR-FREE OR WILL ACCOMPLISH ANY PARTICULAR RESULT.

1.0 GENERAL DESCRIPTION

The Thermo Electron Corporation *personal*DataRAM™ (for *Personal* Data-logging Real-time Aerosol Monitor) is a technologically advanced instrument designed to measure the concentration of airborne particulate matter (liquid or solid), providing direct and continuous readout as well as electronic recording of the information.

The *personal*DataRAM is available in two versions: model *p*DR-1000AN and model *p*DR-1200. The model *p*DR-1000AN operates as a passive air sampler whereas the model *p*DR-1200 uses active air sampling. The user can convert from one to the other of these two versions by means of optional conversion kits offered by Thermo Electron (see Sections 4.2 and 15.0 of this manual).

The model *p*DR-1000AN passively samples (i.e., without a pump) the air surrounding the monitor; air freely accesses the sensing chamber of the instrument by means of convection, diffusion, and adventitious air motion. The model *p*DR-1200, on the other hand, requires a separate vacuum pump (not included) such as Thermo Electron's *p*DR-PU, a personal-type pump for its operation.

In addition, the model *p*DR-1200 includes a particle size-selective inlet cyclone which permits size segregated measurements (i.e., PM_{10}, $PM_{2.5}$, respirable, etc.) as well as enabling the user to perform aerodynamic particle sizing by varying the sampling flow rate. The model *p*DR-1200 incorporates, downstream of its photometric sensing stage, a standard 37-mm filter holder on which all sampled particles are collected for subsequent analysis or gravimetric referencing/calibration, if so desired.

The *personal*DataRAM is the result of many years of field experience acquired with thousands of units of its well known predecessor, the Thermo Electron/MIE MINIRAM, and embodies many technological advances made possible by the latest electronic hardware and software. The *personal*DataRAM is also a worthy miniaturized companion to the Thermo Electron DataRAM 4, a recognized paragon of portable aerosol monitors.

The *personal*DataRAM is a high sensitivity nephelometric (i.e. photometric) monitor whose light scattering sensing configuration has been optimized for the measurement of the respirable fraction of airborne dust, smoke, fumes and mists in industrial and other indoor environments.

The *personal*DataRAM is an ultra-compact, rugged and totally self-contained instrument designed for hand-held, belt-worn, as well as unattended operation. It is powered either by its internal replaceable 9V battery, or by an optional attachable rechargeable battery pack, or by an AC supply (included as standard accessory). For the model *p*DR-1200, power to an adjunct pump must be provided separately.

Zeroing is accomplished by means of a hand-inflatable "zero air" pouch included with the model *p*DR-1000AN, and by an inlet filter cartridge provided with the model *p*DR-1200. In addition, the instrument automatically checks agreement with its original factory calibration by checking its optical background during the zeroing sequence.

The *personal*DataRAM covers a wide measurement range: from 0.001 mg/m^3 (1 µg/m^3) to 400 mg/m^3, a 400,000-fold span, corresponding to very clean air up to extremely high particle levels.

In addition to the auto-ranging real-time concentration readout, the *personal*DataRAM offers the user a wide range of information by scrolling its two-line LCD screen, such as run start time and date, time averaged concentration, elapsed run time, maximum and STEL values with times of occurrence, etc.

Operating parameters selected and diagnostic information displays are also available. Furthermore, the *personal*DataRAM features complete, large capacity internal data logging capabilities with retrieval through an externally connected computer. The stored information (up to 13,000 data points) includes average concentration values, maximum and STEL values with time information as well as tag numbers.

Selectable alarm levels with built-in audible signal and switched output, a RS-232 communications port, and a programmable analog concentration output (voltage and current) are all part of this versatile instrument.

A custom software package is provided with the *personal*DataRAM to program operating/logging parameters (e.g. logging period, alarm level, concentration display averaging time, etc.) as well as to download stored or real-time data to a PC or laptop for tabular and/or graphic presentation. If required, the data can also be imported to standard spreadsheet packages (e.g. Microsoft Excel™, IBM Lotus 1-2-3™, etc.).

2.0 SPECIFICATIONS

- Concentration measurement range (auto-ranging)[1]: 0.001 to 400 mg/m^3

- Scattering coefficient range: 1.5×10^{-6} to 0.6 m^{-1} (approx.) @ λ =880 nm

- Precision/repeatability over 30 days (2-sigma)[2]:
  ± 2% of reading or ±0.005 mg/m^3, whichever is larger, for 1-sec. averaging time
  ±0.5% of reading or ±0.0015 mg/m^3, whichever is larger, for 10-sec. averaging time
  ±0.2% of reading or ±0.0005 mg/m^3, whichever is larger, for 60-sec. averaging time

- Accuracy[1]: ±5% of reading ±precision

- Resolution: 0.1% of reading or 0.001 mg/m^3, whichever is larger

- Particle size range of maximum response: 0.1 to 10 µm

- Flow rate range (model *p*DR-1200 only): 1 to 10 liters/minute (external pump required)

- Aerodynamic particle sizing range (model *p*DR-1200 only): 1.0 to 10 µm

- Concentration display updating interval: 1 second

- Concentration display averaging time[3]: 1 to 60 seconds

- Alarm level adjustment range[3]: selectable over entire measurement range

- Alarm averaging time[3]: real-time (1 to 60 seconds), or STEL (15 minutes)

- Datalogging averaging periods[3]: 1 second to 4 hours

- Total number of data points that can be logged in memory: 13,391

- Number of data tags (data sets): 99 (maximum)

- Logged data:

  - Each data point: average concentration, time/date, and data point number
  - Run summary: overall average and maximum concentrations, time/date of maximum, total number of logged points, start time/date, total elapsed time (run duration), STEL concentration and time/date of occurrence, averaging (logging) period, calibration factor, and tag number.

- Elapsed time range: 0 to 100 hours (resets to 0 after 100 hours)

- Time keeping and data retention: > 10 years

- Readout display: LCD 16 characters (4 mm height) x 2 lines

- Serial interface: RS-232, 4,800 baud

- Computer requirements: IBM-PC compatible, 486, Pentium, or higher, Windows™ '95 or higher, ≥ 8 MB memory, hard disk drive, CD-ROM Drive, VGA or higher resolution monitor

- Outputs:

  - Real-time digital signal (1 sec^{-1}): concentration, 16-character code, simplex mode
  - Real-time analog signal: 0 to 5 V and 4 to 20 mA. Selectable full scale ranges: 0-0.1, 0-0.4, 0-1.0, 0-4.0, 0-10, 0-40, 0-100, and 0-400 mg/m^3.
  - Minimum load impedance for voltage output: 200 kΩ.
  - Maximum load impedance for current output: 300 Ω (when powered by AC power supply)
  - Alarm output: 1 Hz square wave, 5 V peak-to-peak amplitude. Load impedance > 100 kΩ

- Internal battery: 9V alkaline, 20-hour run time (typical)

- Current consumption: 15 to 25 mA (in Run Mode); 10 to 20 mA (in Ready Mode)

- AC source: universal voltage adapter (included) 100-250 V~, 50-60 Hz (CE marked)

- Optional battery pack: model *p*DR-BP, rechargeable NiMH, 72-hour run time (typical)

- Operating environment: -10° to 50° C (14° to 122° F), 10 to 95% RH, non-condensing

- Storage environment: -20° to 70° C (-4° to 158° F)

- Dimensions (max. external):

  - Model *p*DR-1000AN: 153 mm (6.0 in) H x 92 mm (3.6 in) W x 63 mm (2.5 in) D
  - Model *p*DR-1200 (including cyclone and filter holder): 160 mm (6.3 in) H x 205 mm (8.1in) W x 60 mm (2.4 in) D

- Weight:
  - Model *p*DR-1000AN: 0.5 kg (18 oz)
  - Model *p*DR-1200: 0.68 kg (24 oz)
- Cyclone (included in model *p*DR-1200 only): Model KTL
- Filter holder (included in model *p*DR-1200 only): Model MAWP037AO (with 0.8 μm pore size filter)

---

[1] Referred to gravimetric calibration with SAE Fine (ISO Fine) test dust (mmd = 2 to 3 μm, σg = 2.5, as aerosolized)
[2] At constant temperature and full battery voltage
[3] User selectable

3.0 USER GUIDELINES

3.1 Handling Instructions

The *personal*DataRAM is a sophisticated optical/electronic instrument and should be handled accordingly. Although the *personal*DataRAM is very rugged, it should not be subjected to excessive shock, vibration, temperature or humidity. As a practical guideline, the *personal*DataRAM should be handled with the same care as a portable CD player.

If the *personal*DataRAM has been exposed to low temperatures (e.g. in the trunk of a car during winter) for more than a few minutes, care should be taken to allow the instrument to return near room temperature before operating it indoors. This is advisable because water vapor may condense on the interior surfaces of the *personal*DataRAM causing temporary malfunction or erroneous readings. Once the instrument warms up to near room temperature, such condensation will have evaporated. If the *personal*DataRAM becomes wet (e.g. due to exposure to water sprays, rain, etc.), allow the unit to dry thoroughly before operating.

Whenever the *personal*DataRAM is shipped care should be taken in placing it in its carrying case and repackaging it with the original cardboard box with the factory provided padding.

3.2 Safety Instructions

- Read and understand all instructions in this manual.
- Do not attempt to disassemble the instrument. If maintenance is required, return unit to the factory for qualified service.
- The *personal*DataRAM should be operated only from the type of power sources described in this manual.
- When replacing the internal 9V battery, follow the instructions provided on the back panel of the unit.
- Shut off *personal*DataRAM and any external devices (e.g. PC or Laptop) before connecting or disconnecting them.
- Shut off *personal*DataRAM before replacing the internal battery, or when plugging in or disconnecting the AC power supply or the optional rechargeable battery pack.

3.3 Handling and Operation

3.3.1 Model *p*DR-1000AN

The model *p*DR-1000AN can be operated in any position or orientation. Exposure to high intensity fluctuating light of the interior of the sensing chamber, through the front and back slotted air openings (see Section 5.5), should be avoided. Such large intensity transients may cause erroneous readings. Direct access of sunlight to the sensing chamber should be prevented.

Typical modes of instrument support/handling include:

- Hand-held. Do not obstruct or cover the sensing chamber opening slots on front and back of unit.
- Belt attached. Use belt clip provided as standard accessory. The unit can be worn on a waist belt, or with optional shoulder belt (model *p*DR-SS) for breathing zone monitoring.
- Tabletop operation. The *p*DR-1000AN can be placed on a table either in an upright position (i.e., resting on its lower protective bumper), or on its back (i.e., resting on the rear edges of its two protective bumpers).
- Tripod mounted. The unit can be attached to any standard tripod using the threaded bushing on the bottom of the monitor (see Figure 3).
- Fixed point operation. The model *p*DR-1000AN can be mounted at a fixed location (e.g., wall or post) using the optional wall-mounting bracket, model *p*DR-WB.

3.3.2 Model *p*DR-1200

The *p*DR-1200 requires an external vacuum pump, such as a small diaphragm pump (e.g., model *p*DR-PU) for its sampling operation. The inlet of the pump must be connected by means of tubing to the hose fitting on the *p*DR-1200 37-mm filter holder attached to sensing chamber (see Figure 2).

The inlet metal tube of the cyclone can be oriented in any desired direction (i.e., upward, forward, downward or backward) by rotating the cyclone body within its holder cup on the right side of the sensing chamber (see Figure 2).

Always ensure unobstructed access to the cyclone inlet when sampling directly the air in the instrument's vicinity. Alternatively, tubing can be connected to the cyclone inlet in order to extract a sample stream from a duct, chamber or other enclosed volume.

Typical modes of instrument support/handling include:

- Hand-held. For example, using a personal type pump, clipped to the belt and using a tubing connection to the *p*DR-1200.
- Belt attached. Use belt clip kit provided as standard accessory. The unit can be worn on a waist belt, or with the optional shoulder belt (model *p*DR-SS) for breathing zone monitoring. A personal pump can then be belt-worn as well.
- Tabletop operation. The *p*DR-1200 can be placed on a table either in an upright position (i.e. resting on its lower protective bumper), or on its back (i.e. resting on its backside).
- Wall mounted for fixed point monitoring. Use optional wall mounting bracket, model *p*DR-WB, either in combination with model *p*DR-PU pump module and model *p*DR-AC power supply (powering both the *p*DR-1200 and the *p*DR-PU), or with a separate pump.

- Tripod mounted. The unit can be attached to any standard tripod using the threaded opening on the bottom base (see accessory attachment fitting on Fig. 4).

3.4 Air Sampling Guidelines

Although the *personal*DataRAM is designed primarily for intramural use, i.e. for indoor air quality, in-plant, or mining environment monitoring, its active sampling version (model *p*DR-1200) also makes it compatible with extramural use (i.e. ambient monitoring). General ambient monitoring applications, however, are performed preferentially using an appropriate inlet configuration, in order to ensure representative particle sampling under conditions of variable wind speed and direction. Consult with Thermo Electron Corporation for such outdoor applications.

For typical area monitoring applications, the *personal*DataRAM should be placed and operated centrally within the area to be monitored, away from localized air currents due to fans, blowers, ventilation intakes/exhausts, etc. This is to ensure representative sampling within the area to be assessed.

3.5 Environmental Constraints and Certifications

The *personal*DataRAM is designed to be reasonably dust and splash resistant, however, it is not weatherproof. To operate the unit outdoors provisions should be made to protect it from environmental extremes outside its specified range, and <u>from any exposure to precipitation</u>.

The *personal*DataRAM has received intrinsic safety approval (No. 2G-4126-0) from the U.S. Mine Safety and Health Administration (MSHA) for use in coal-mining environments containing methane gas. The MSHA approval (type 2G) closely resembles the standard intrinsic safety rating as defined by Class 1, Div. 1, Group D. This approval makes the MIE *personal*DataRAM the only commercially produced direct reading dust monitor so certified by MSHA and, therefore, the only instrument of this type permitted to be used routinely in U.S. coal mines and similar environments.

The *personal*DataRAM is certified for compliance with the electromagnetic radiation limits for a Class A digital device, pursuant to part 15 of the FCC Rules. The unit also complies and is marked with the CE (European Community) approval for both immunity to electromagnetic radiation and absence of excessive emission interference.

4.0 ACCESSORIES

4.1 Standard Accessories

The *personal*DataRAM is provided to the user with the following standard accessories:

- Soft-shell carrying case (Thermo Electron model *p*DR-CC-1)
- Digital communications cable (Thermo Electron model *p*DR-DCC)
- Analog signal/alarm output cable (Thermo Electron model *p*DR-ANC)
- Communications software disk (Thermo Electron model *p*DR-COM)
- Z-Pouch zeroing kit (Thermo Electron model *p*DR-ZP [for use with *p*DR-1000AN only])
- Zeroing filter cartridge and tubing (Thermo Electron model *p*DR-ZF)(for use with *p*DR-1200 only)
- Belt clip kit (Thermo Electron model *p*DR-CA)
- AC power supply (and charger for optional Thermo Electron model *p*DR-BP) (Thermo Electron model *p*DR-AC)
- Metal cyclone (Thermo Electron model *p*DR-GK2.05)(for use with *p*DR-1200 only)
- 37-mm filter holder and hose fitting (Thermo Electron model *p*DR-FH)(for use with *p*DR-1200 only)
- Instruction manual

4.2 Optional Accessories

The following optional accessories are available from Thermo Electron for use with the *personal*DataRAM:

- Rechargeable battery module (Thermo Electron model *p*DR-BP)
- Shoulder strap (Thermo Electron model *p*DR-SS)
- Remote alarm unit (Thermo Electron model *p*DR-RA)
- Wall mounting bracket (Thermo Electron model *p*DR-WB)
- Active sampling kit to convert model *p*DR-1000AN to model *p*DR-1200 (Thermo Electron model *p*DR-ASC)
- Upper bumper kit to convert model *p*DR-1200 to model *p*DR-1000AN (Thermo Electron model *p*DR-UB)
- Attachable pump unit (Thermo Electron model *p*DR-PU)(for use with *p*DR-1200 only)

5.0 INSTRUMENT LAYOUT

The user should become familiar with the location and function of all externally accessible controls, connectors and other features of the *personal*DataRAM. Refer to Figures 1 through 6.

All user related functions are externally accessible. All repair and maintenance should be performed by qualified Thermo Electron personnel. Please contact the factory if any problem should arise. Do not attempt to disassemble the *personal*DataRAM, except as described in Section 12.0 (Maintenance), **otherwise voiding of instrument warranty will result.**

5.1 Front Panel

Refer to Figures 1 (for model *p*DR-1000AN) or 2 (for model *p*DR-1200) for location of controls and display.

The front panel contains the four touch switches (keys) and the LCD screen required for the operation of the *personal*DataRAM.

The four touch switches provide tactile ("popping") feedback when properly actuated.

The ON/OFF key serves only to turn on the unit (while it is in the off state), and to turn it off (when it is operating).

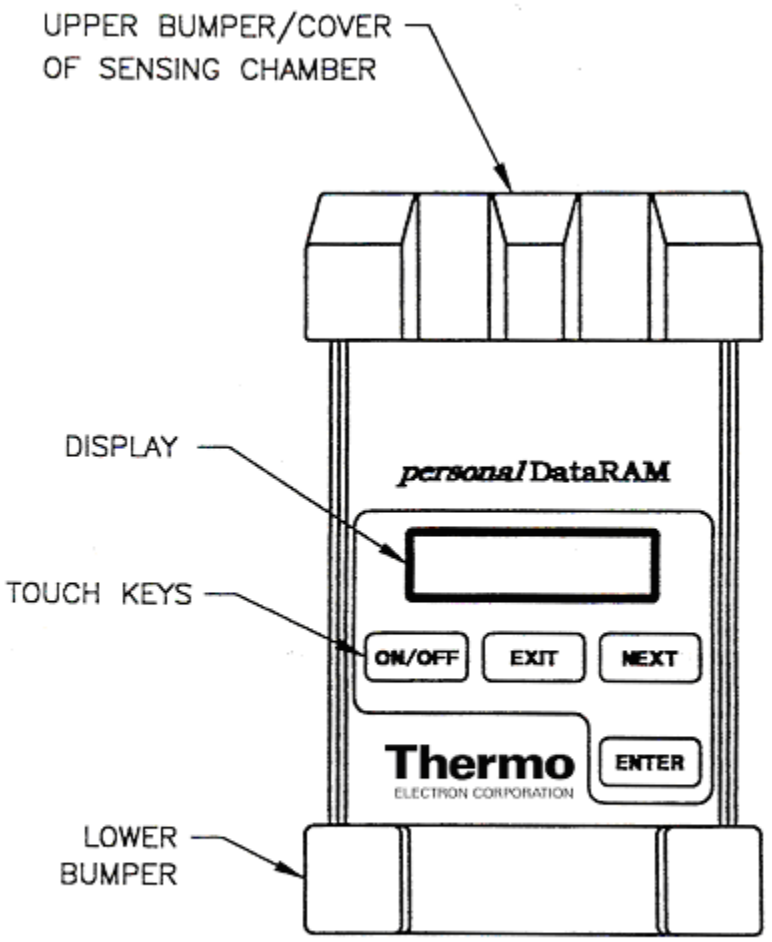

Figure 1 – FRONT PANEL (MODEL pDR–1000AN)

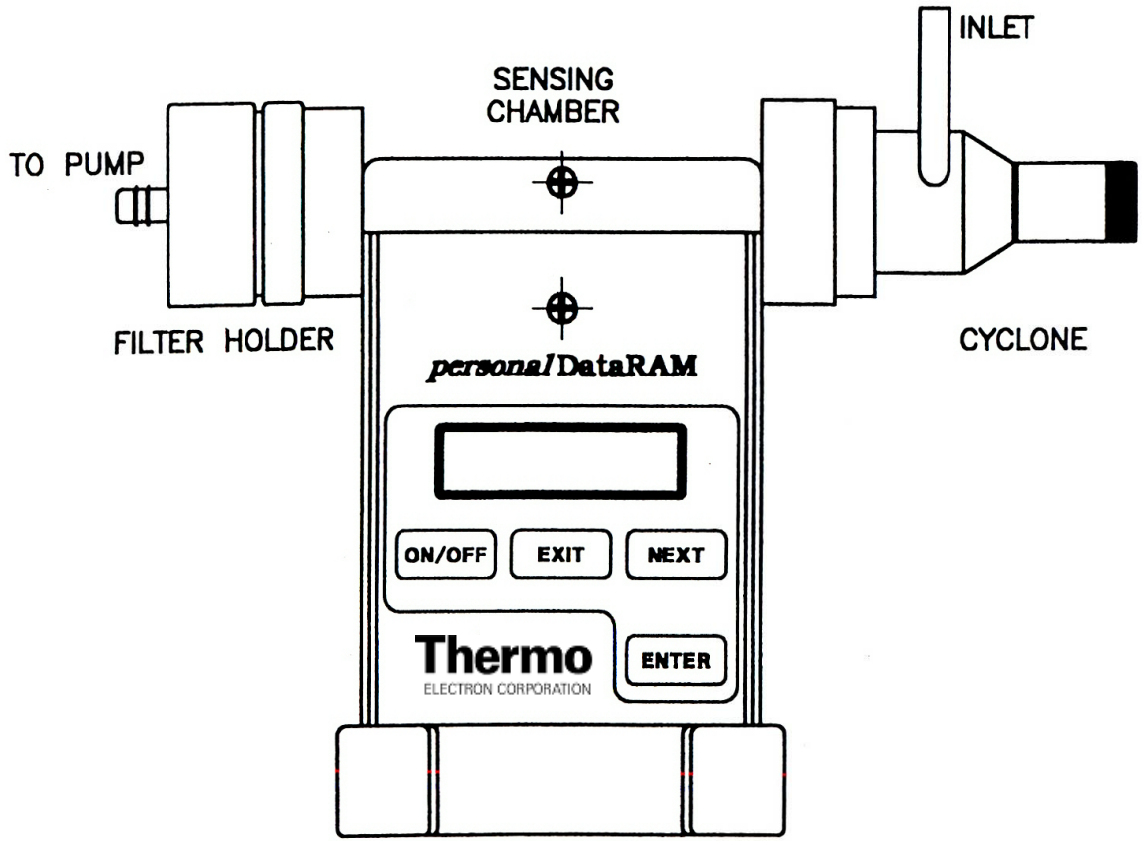

Figure 2. MODEL pDR-1200 WITH CYCLONE & 37MM FILTER HOLDER

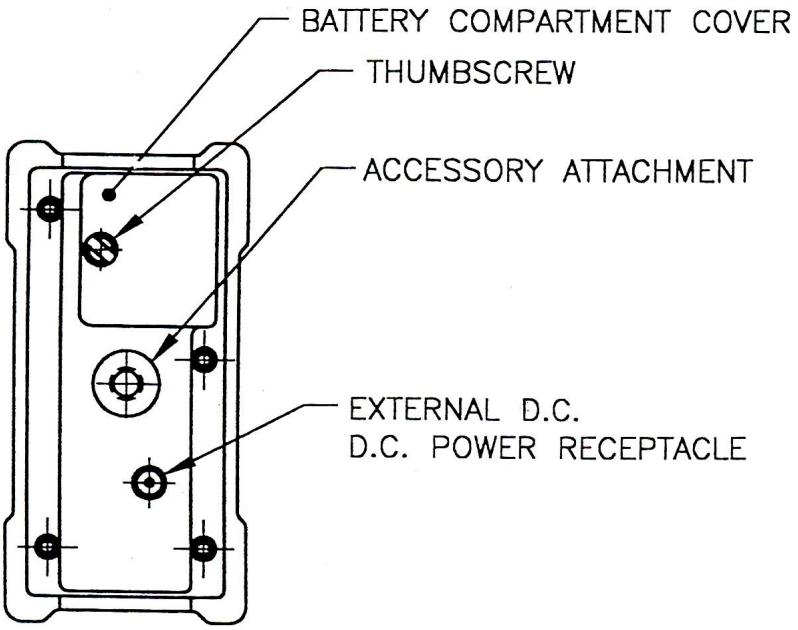

Figure 3 – BOTTOM BASE (MODEL pDR–1000AN)

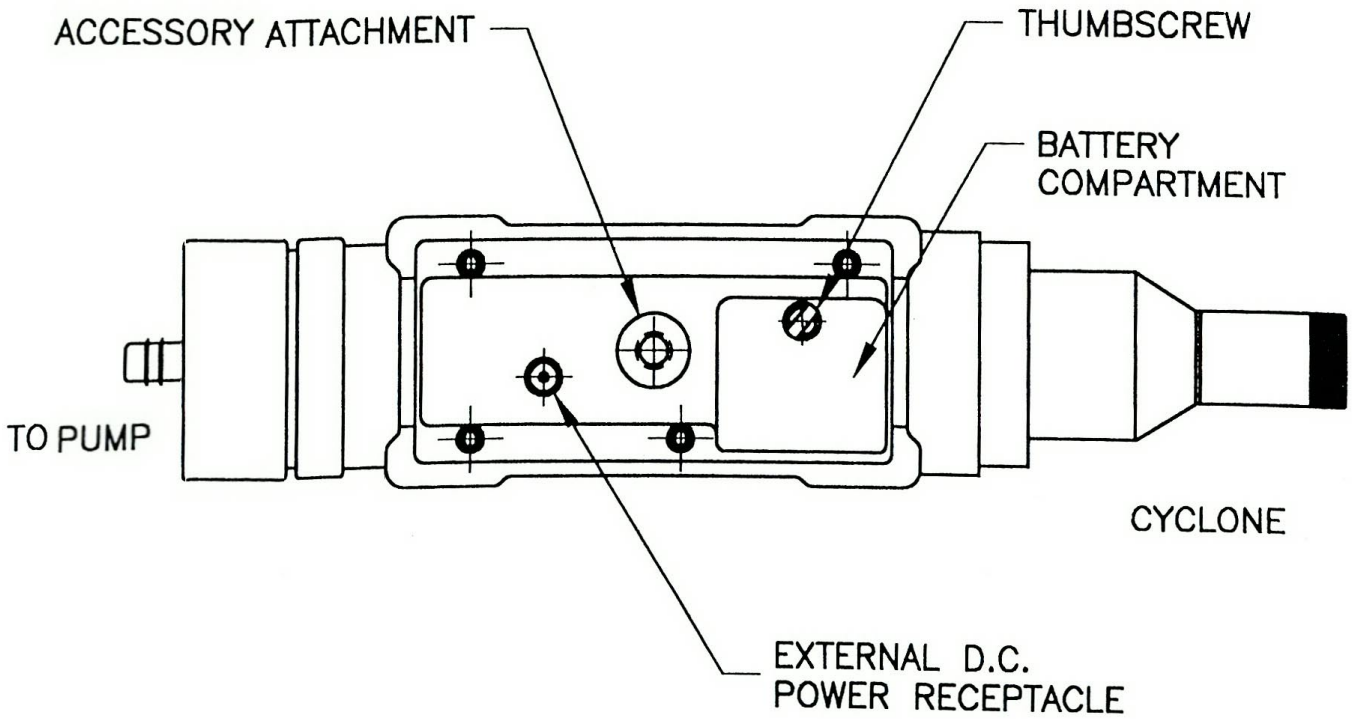

Figure 4 – BOTTOM VIEW (MODEL pDR–1200)

The EXIT and ENTER keys serve to execute specific commands that may be indicated on the screen, and the NEXT key generally serves to scroll the displayed information, e.g. to review the operating parameters that have been programmed, display maximum/STEL values, diagnostic values, etc.

If an incorrect command is keyed (e.g. ENTER when the *personal*DataRAM displays real-time concentration) a beep is heard to alert the user.

The two-line, 16-character per line LCD indicates either measured values of concentration (instantaneous and time averaged on the same screen), elapsed run time, maximum and STEL (short term excursion limit) values, operating and logging parameters, diagnostics, or other messages.

The acoustic alarm transducer is located directly behind the center of the Thermo Electron Corporation logo on the front panel.

5.2 Bottom Base

Refer to Figures 3 (for model *p*DR-1000AN) or 4 (for model *p*DR-1200). The base of the *personal*DataRAM contains the following: a) internal battery compartment cover, b) external DC power input receptacle, and c) threaded bushing for the attachment of optional battery pack, tripod, or other mounting/support hardware.

Only the internal battery compartment cover should be opened by the user, for removal and replacement of the on-board 9V battery. Removal of the base plate could result in voiding of instrument warranty.

5.3 Right Side Panel

Refer to Figures 5 (for model *p*DR-1000AN) or 6 (for model *p*DR-1200) which shows the manner of attachment of the belt clip assembly (belt clip should be attached only if required by the user). The right side panel (as viewed from front panel) contains the RJ-12 6-contact modular jack connector receptacle for digital (RS-232) communications and analog signal output. This connector also provides the alarm output control for a remote/auxiliary alarm signal. The contacts (from top to bottom) are:

1: 4 – 20 mA analog output (positive)
2: Alarm output
3: Digital data transmission
4: Digital input
5: Common ground (signal returns)
6: 0 to 5 V analog output (positive)

The digital communications cable provided as a standard accessory is to be inserted into this receptacle for interconnection to a computer (for data downloading or to

reprogram parameters). The analog output cable is provided with flying leads for interconnection with other data processing and/or control systems.

WARNING: The modular jack receptacle on the side of the *personal*DataRAM should be used only for communications with computers and alarm circuitry. **Do not, under any circumstance, connect any communications equipment (e.g., telephone) to this receptacle.**

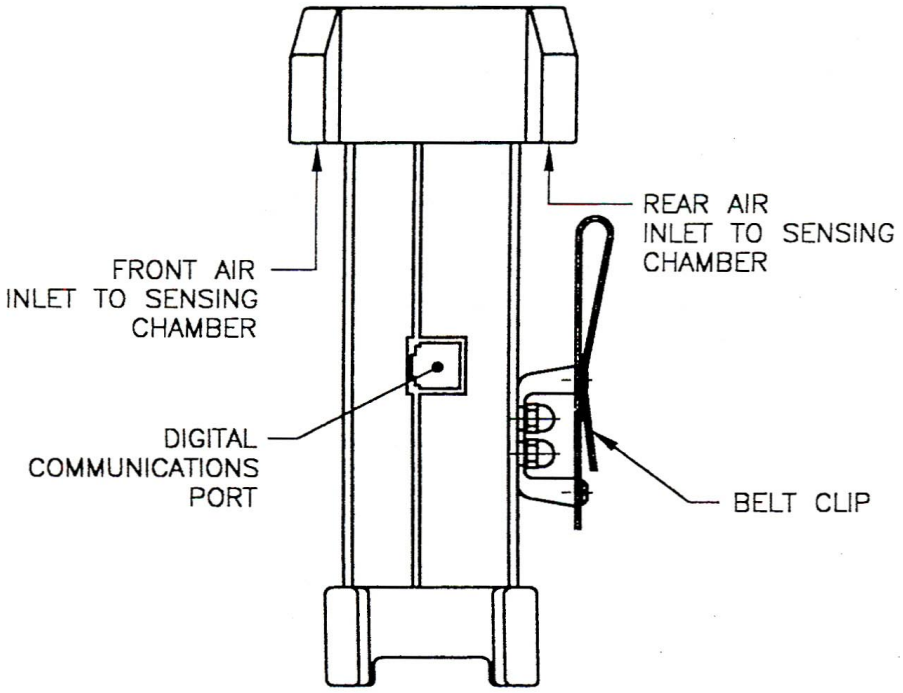

Figure 5 – RIGHT SIDE PANEL (MODEL pDR–1000AN)
(SHOWN WITH BELT CLIP ATTACHED)

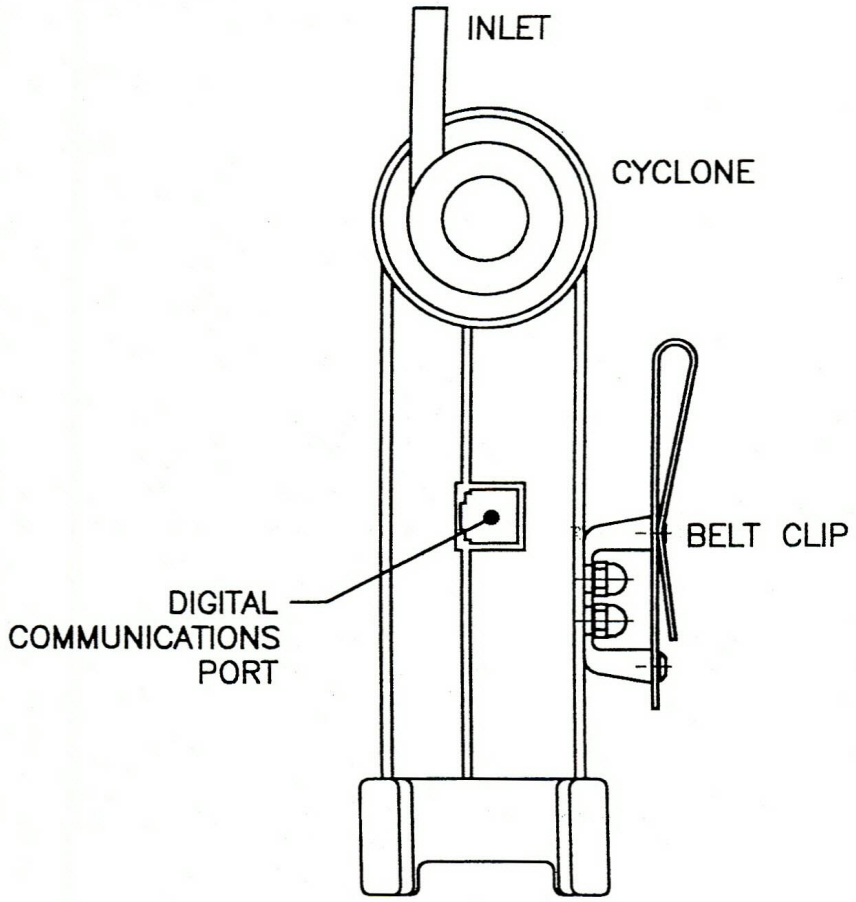

Figure 6 – RIGHT SIDE VIEW (MODEL pDR–1200)
(SHOWN WITH BELT CLIP ATTACHED)

5.4 Back Panel and Belt Clip

The back panel consists of a label with important user information on safety procedures and certifications, model and serial numbers, etc. and is provided with mounting hardware for the attachment of the belt clip kit (see Figures 5 or 6 for mounting configuration of the belt clip).

5.5 Sensing Chamber

Referring to Figure 1 or 2, the upper mid-section of the *personal*DataRAM contains the optical sensing chamber. This chamber is the only internal section that the user should access for maintenance purposes (see Section 12.2).

On the model *p*DR-1000AN, air enters the sensing chamber through the two slot shaped inlets (one on the front and other on the back) under the protective bumper. During instrument operation those two openings should remain unobstructed in order to ensure free access of the surrounding air. When the model *p*DR-1000AN is used as personal monitor, i.e., clipped to a person's belt, the rear air inlet opening may be partially obstructed, but care should be exercised in ensuring that the front air inlet remains free of any obstructions.

On the model *p*DR-1200, air enters the sensing chamber through the opening in the cyclone receptacle cup (black cup on right side of sensing chamber), passes through the photometric stage, and exits through the opening in the filter holder receptacle cup (black cup on left side of sensing chamber), after which the air passes through the filter.

6.0 PREPARATION FOR OPERATION

6.1 Battery Installation

When shipped from the factory, the *personal*DataRAM will arrive without its replaceable 9V battery installed. Two fresh alkaline batteries (Duracell® type MN1604) are factory packed separately in the carrying case, one of which should be installed in the *personal*DataRAM when preparing it for operation.

NOTE: Whenever the *personal*DataRAM is to be left unused for an extended time (i.e. longer than a month), the 9V battery should be removed from the unit.

Removing the battery will lose neither the program, time/date keeping, nor stored data.

To install the battery proceed as follows:

- Hold the *personal*DataRAM upside down.
- Loosen thumbscrew that secures the battery compartment cover (see Figure 3 or 4), and remove that cover.

- Observe battery polarity and the back panel battery orientation pattern (the negative battery terminal is the one closer to the side of the instrument).
- Insert the battery by sliding it in until it bottoms out. It should protrude slightly above the bottom surface of the instrument.
- Place battery compartment cover over battery and, while pushing down the cover firmly (taking care that the cover seats flush on the bottom surface of the *personal*DataRAM), tighten thumbscrew securely.

6.2 Battery Replacement

Normally, only a 9V Duracell® type MN1604 alkaline batteries should be used with the *personal*DataRAM in accordance the MSHA intrinsic safety approval.

Only fresh batteries should be used in order to ensure the maximum operating time. The *personal*DataRAM shuts itself off whenever the battery voltage falls below 6 volts (while retaining all programming and data). A fresh 9V alkaline battery, at room temperature, should provide typically 20 hours of continuous operation (please note that not all manufacturers produce batteries of equal capacity). Intermittent operation should extend the total running time because of partial battery recovery effects.

The approximate remaining battery capacity is indicated by the *personal*DataRAM (see Section 8.2) in increments of 1%, starting from 99%. If the remaining battery capacity is 40% or less, immediate restarting after shut off is automatically inhibited to prevent incomplete runs. If, nevertheless, a new run is to be initiated with low remaining battery capacity, do not shut off the *personal*DataRAM at the end of the previous run (i.e., remain in the Ready Mode, see section 7.0).

When significantly extended operating times are required (beyond the typical 20 hours), the use of either lithium or zinc-air batteries can be considered. The use of such alternative battery types can provide about 2 to 3 times longer operation than alkaline batteries.

6.3 AC Power Supply

A universal line voltage AC to DC power supply (Thermo Electron model *p*DR-AC) is provided as standard accessory with the *personal*DataRAM. This power supply can be used with any line with a voltage between 100 and 240 VAC (50 to 60 Hz). When using that power supply, its output plug should be inserted into the external DC receptacle at the base of the *personal*DataRAM (see Figure 3 or 4). Insertion of that connector automatically disables the internal 9V battery of the instrument. Removal of the *p*DR-AC plug from the instrument automatically re-connects the internal 9V battery.

NOTE: Before plugging in or unplugging the external power supply, the *personal*DataRAM must be shut off.

6.4 Rechargeable Battery Module

A rechargeable battery pack (Thermo Electron model *p*DR-BP) is available as an optional accessory. This unit attaches directly to the base of the *personal*DataRAM.

The *p*DR-BP contains a sealed nickel-metal-hydride battery (NiMH), which provides typically 72 hours of continuous operation between successive charges (for 3-hour charging).

The use of the *personal*DataRAM, in combination with the *p*DR-BP connected to the AC power line ensures totally uninterruptible operation over an indefinite period. In this operating mode, line power interruptions lasting up to 72 hours have no effect on measurement run continuity.

To attach the *p*DR-BP to the *personal*DataRAM, the instrument should be shut off. Carefully plug the *p*DR-BP into the external DC receptacle on the *personal*DataRAM. Rotate the large thumbscrew at the opposite end of the *p*DR-BP tightening it firmly. The *p*DR-BP can be recharged by means of the AC power supply of the *personal*DataRAM.

Detailed instructions for the use of the rechargeable battery module are furnished with that accessory.

6.5 Zeroing the personalDataRAM

One of the most important steps to be performed by the user before initiating a measurement run with the *personal*DataRAM is to zero the instrument. This is required to ensure maximum accuracy of concentration measurements, especially at low levels, i.e. below about 0.1 mg/m^3.

During the 2-minute pre-run automatic zeroing sequence (see Section 8.1), the *personal*DataRAM registers its own optical background, stores that level in its memory, and then subtracts that background from all measured concentration values, until the zero is updated again by the user.

Although zeroing can be performed as often as desired (e.g., before every run), in practice it should not be necessary to do so more than once-a-month or even less frequently, except if average particulate concentrations should exceed about 0.5 mg/m^3.

6.5.1 Zeroing the model *p*DR-1000AN

Zeroing of the model *p*DR-1000AN requires a particle-free environment such as a clean room, clean bench, duct or area directly downstream of a HEPA filter, or the *p*DR-1000AN Z-Pouch (standard accessory). In some cases, a very clean, well air-conditioned office may offer a sufficiently low particle concentration environment

(i.e., ≤ 5 μg/m^3) for zeroing, as determined by another monitor (e.g., Thermo Electron DataRAM 4).

To zero the model *p*DR-1000AN by means of its Z-Pouch, proceed as follows:

- Wipe the outside surfaces of the *p*DR-1000AN to remove as much dust from those surfaces as possible before placing the instrument inside the Z-Pouch.
- In a reasonably clean environment, open the zipper of the Z-Pouch and place the *p*DR-1000AN inside it. Close the zipper shut.
- Open the small nipple on the Z-Pouch, and insert the fitting of the hand pump/in-line filter unit into the nipple.
- Start pumping the hand-pump until the Z-Pouch begins to bulge, and proceed with the steps in Section 8.1, pressing the keys of the instrument through the wall of the Z-Pouch. Then slowly continue to pump to maintain positive pressure within the Z-Pouch.
- After completing the zeroing (step 2. of Section 8.1) procedure, open the Z-Pouch zipper and remove the *p*DR-1000AN. Close the zipper and flatten the Z-Pouch while plugging its nipple, in order to prevent dust contamination of the interior of the Z-Pouch.
- The *p*DR-1000AN is now zeroed and ready for a measurement run.

6.5.2 Zeroing the model *p*DR-1200

To provide the particle-free air required to zero the *p*DR-1200, either of two methods can be used: a) place the instrument on a clean-air bench or in a clean room, or b) connect to the cyclone inlet the green zeroing filter cartridge supplied with the *p*DR-1200. In either case, proceed as follows:

- After implementing either of the two methods, above, run the attached pump for at least one minute (e.g., at 2 liters/minute), and then proceed as described in Section 8.1 of this instruction manual, while continuing to run the pump (or leaving the unit in the clean air environment).
- Once the CALIBRATION: OK message appears on the *p*DR-1200 display, stop the pump and disconnect the zeroing filter cartridge from the cyclone inlet (or remove *p*DR-1200 from clean bench/room).
- The *p*DR-1200 is now zeroed and ready for a measurement run.

Note: While the *p*DR-1200 is used to monitor high dust concentrations (≥ 0.5 mg/m^3), the flow through its sensing chamber should not be stopped before purging it, which can be done by connecting the green zeroing filter to the cyclone inlet and continuing to run the pump for about 2 minutes before shutting it off. This is to prevent dust contamination of the sensing chamber.

6.6 *p*DR-1200 Filter Holder Installation

The 37-mm filter holder provided with the *p*DR-1200 must be installed before operation of the instrument, in order to connect a sampling pump. To install the filter holder, remove protective cover, and insert the open collar over the black attachment cup with the external o-ring, on the left side of the *p*DR-1200 sensing chamber. Ensure complete insertion.

To replace the membrane filter separate the two sections of the plastic holder prying them apart with screwdriver or a coin. Make sure to place backing under the membrane filter before rejoining the two plastic rings.

7.0 OPERATING MODES

The *personal*DataRAM has several different operating modes which will be described in what follows. The specific commands and displays within each of these operating modes will be explained in detail in Section 8.0. A complete flow chart of keystrokes and screens is provided in Section 16.0.

7.1 Start-Up Mode

The *personal*DataRAM enters the Start-Up Mode as soon as the instrument is switched on. The user then has the choice to:
a) Wait before proceeding;
b) Zero the instrument and check its readiness; or
c) Proceed directly to the Ready Mode.

7.2 Ready Mode

Once the *personal*DataRAM is in the Ready Mode, the user is presented with the following alternatives:
a) Start a run immediately, or after any of the subsequent steps;
b) Review (by scrolling the display) all operating parameters, status and diagnostic data;
c) Activate or deactivate the logging function; activate, select (instantaneous or STEL), or deactivate alarm;
d) Program parameters or output logged data through a computer.

7.3 Run and Logging Mode

The Run Mode is the measurement/logging mode. The user can operate the *personal*DataRAM in this mode either with or without data logging. For example, the instrument may be used first as a survey monitor without logging, for walk-through assessment of an industrial plant, before deciding where to set up the unit for continuous monitoring and logging.

7.3.1 Data Logging

In order to activate the logging function, the unit must be in (or returned to) the Ready Mode (see Section 8.2).

If data logging has been enabled, the data will be logged in the next free (unrecorded) tag or data set. For example, if data had been recorded previously in tags # 1, 2 and 3 then, when a new run is initiated, the new data will be stored in tag #4. The data can be separated into number of sets (tags) up to a total of 99.

Any number of individual data points can be stored in a given tag, i.e. up to a maximum of 13,000 points (i.e. the total memory capacity of the *personal*DataRAM) assuming that no other data had been logged in other tags. This means that the total memory capacity of 13,000 data points can be grouped into any number of the available 99 data sets (tags).

7.3.2 Clearing of Memory

Data recorded in the *personal*DataRAM memory can be erased either through an external PC command using the Thermo Electron *p*DR-COM Custom Communications software provided as a standard accessory, or resetting the instrument (see Section 8.5). The PC method permits to erase the data in any number of selected tags, whereas the resetting method results in the deletion of all data stored in the *personal*DataRAM.

7.3.3 Run Mode Display and Commands

When a measurement run has been initiated (see Section 8.3), the user has the following display choices:

a) Instantaneous and time-averaged concentrations (both on the same screen);
b) Elapsed run time, and run start time and date (both on the same screen);
c) Maximum displayed concentration from run start, and time/date at which current maximum occurred;
d) Short term excursion limit (STEL) from run start, and time/date at which current STEL occurred;
e) Remaining battery charge, and (if logging function is enabled) remaining free memory.
f) Analog output concentration range (if enabled)

The user can command the termination of the run at any time returning it to the Ready Mode. To download logged data into a PC, the *personal*DataRAM must be in the Ready Mode. No changes in the program parameters or operating conditions can be made while in the Run Mode.

The *personal*DataRAM can be shut off from any of the three operating modes. Even if shut off while in the Run Mode, the instrument will save all stored data.

8.0 OPERATION

8.1 Start-Up

	KEY	DISPLAY	NOTES
1.	**ON/OFF**	START ZERO:ENTER GO TO RUN: NEXT	Before starting a run with the *personal*DataRAM, zero it (see Section 6.5) and key **ENTER** while the unit is exposed to particle-free air. Alternatively, key **NEXT** to go to RUN/READY mode. If **ENTER** is keyed:
2.	**ENTER**	ZEROING V2.00	Keep clean air flowing while ZEROING is displayed* for 1.1 min., followed by one of these screens:
		CALIBRATION: OK	or,
		BACKGROUND HIGH	or,
		MALFUNCTION	If CALIBRATION: OK, then go to step 3. If one of the other two screens is displayed, consult Section 12.0.
3.	**NEXT**	START RUN: ENTER READY: NEXT	To start a measurement run key **ENTER** (Section 8.3, step 1). To set up for a run and scroll logging/operating parameters, key **NEXT** (see Section 8.2).
4.	**ON/OFF**	TURN OFF PDR? Y:ENTER N:NEXT	Keying **ON/OFF** while the unit is operating will elicit this message to prevent accidental shut off. To confirm shut down, key **ENTER**. To continue operation, key **NEXT**.

*The number following the V on the screen refers to the installed firmware version.

8.2 Setting Up For A Run (Ready Mode)

	KEY	DISPLAY	NOTES
1.	**NEXT**	LOGGING DISABLED	This screen indicates the logging status. To enable the logging function, key **ENTER**. Toggling of the on/off logging status can be done by keying ENTER.
2.	**ENTER**	LOG INTRVL 600s TAG#: 4	This message indicates that logging is enabled. Example is for 10-min log period, selected through the PC (see Section 9.0), and next free tag is #4.
3.	**NEXT**	ALARM: OFF	This screen indicates the alarm status. Keying **ENTER** repeatedly toggles through the 3 alarm modes:
4.	**ENTER**	ALARM: INSTANT LEVEL:1.50 mg/m^3	This enables the alarm based on the real-time concentration. The level (e.g. 1.50 mg/m^3) must be set on the PC.
5.	**ENTER**	ALARM: STEL LEVEL:0.50 mg/m^3	This enables the alarm based on the 15-min STEL value. The level (e.g. 0.50 mg/m^3) must be set on the PC.
6.	**NEXT**	ANALOG OUTPUT: DISABLED	This screen indicates the analog signal output status. Keying ENTER will enable the analog output. Toggling the analog output on/off can be done by keying **ENTER**:
7.	**ENTER**	ANALOG OUTPUT: 0 – 0.400 mg/m^3	This enables the analog output. The concentration range (e.g., 0 – 0.400 mg/m^3) must be set on the PC.
8.	**NEXT**	CAL FACTOR: 1.00 DIS AVG TIME 10s	This screen displays the calibration factor and the display averaging time. Edit via PC

9.	**NEXT**	BATTERY LEFT 83% MEMORY LEFT 96%	This screen displays the remaining battery charge, and the remaining percentage of free memory.
10.	**NEXT**	CONNECT TO PC	When this screen has been selected, the operating parameters can be edited and/or the logged data can be downloaded via the PC (see Section 9.0). If **NEXT** is keyed again, the screen returns to RUN/READY:
11.	**NEXT**	START RUN: ENTER READY: NEXT	The instrument is now ready to run following the procedure in section 8.3.

8.3 Measurement Run Procedure

	KEY	DISPLAY	NOTES
1.	**ENTER**	LOGGING DISABLED	or, if logging was enabled:
		LOG INTRVL 600s TAG #: 4	Logging status will be displayed for 3 seconds.
		CONC*0.047 mg/m^3 TWA 0.039 mg/m^3	After a 3-second delay, the concentration screen appears values shown here are examples). CONC is the real-time and TWA is the time-averaged concentration. The "*" appears only if logging has been enabled.
2.	**EXIT**	TERMINATE RUN? Y:ENTER N:EXIT	To terminate the current run and return to the Ready Mode, key **ENTER**. To continue the run, key **EXIT**.
3.	EXIT	CONC*0.047 mg/m^3 TWA 0.039 mg/m^3	Keying **NEXT** successively scrolls the display to show various run values (elapsed run time, maximum, STEL, etc.). Keying **EXIT** returns to the concentration display.

4.	**NEXT**	ET 06:12:49 ST 08:18:26MAY15	This screen shows the elapsed run time (ET) and the run start time/date (ST).
5.	**NEXT**	MAX: 0.113 mg/m^3 T 10:08:44 MAY15	This screen shows the maximum concentration of current run and time/date of occurrence.
6.	**NEXT**	STEL:0.058 mg/m^3 T 09:59:22 MAY15	This screen shows the 15-min STEL value of the current run and the time/date of occurrence.
7.	**NEXT**	BATTERY LEFT 83%	or, if logging was enabled:
		BATTERY LEFT 83% MEMORY LEFT 96%	This screen shows the amount of usable charge left in the battery and, if logging has been enabled, the overall amount of free memory left.
8.	**NEXT**	ANALOG OUTPUT: 0 – 0.400 mg/m^3	This screen shows the status of the analog signal output, and the range, if this output has been enabled.
9.	**NEXT**	CONC*0.047 mg/m^3 TWA 0.039 mg/m^3	The last **NEXT** command returns the display to the concentration screen.
10.	**EXIT**	TERMINATE RUN? Y:ENTER N:NEXT	As indicated in step 2, to end current run, key **ENTER**, to return to the Ready Mode:
11.	**ENTER**	START RUN: ENTER READY: NEXT	This keystroke terminates the current run and returns the unit to the Ready Mode.

If during a run the instrument memory is filled completely, or if all 99 tags have been used, the run is automatically terminated and the display will indicate:

RUN TERMINATED
FULL MEMORY

If a new run is initiated after the memory has been filled, the *personal*DataRAM can be operated only as a monitor without logging. The memory must then be cleared (see Section 7.3.2) first before logging can be enabled again.

8.4 Abbreviated Run Start/Stop Instructions

To power-up and start a measurement run without zeroing and without logging, proceed as follows:

- Key sequentially **ON/OFF, NEXT** and **ENTER**.

To terminate run and shut down, proceed as follows starting from the concentration screen (otherwise key **EXIT** first):

- Key sequentially **EXIT**, **ENTER**, **ON/OFF** and **ENTER**.

8.5 Resetting Procedure

The *personal*DataRAM memory can be reset through commands entered on its own keypad (i.e. without requiring a PC).

Resetting accomplishes the following:

- Erases all stored data from memory;

- Resets all parameters and operating conditions to their default values and conditions; and

- Cancels the zero correction offset.

WARNING: THE RESET TEST WILL ERASE ALL DATA STORED IN MEMORY AND SET ALL PARAMETERS TO FACTORY DEFAULT SETTINGS. <u>DOWNLOAD ANY DATA BEFORE THE RESET PROCEDURE.</u>

The procedure to reset the instrument is as follows:

Starting with the unit shut off, press the **EXIT** and **ENTER** keys at the same time, and while holding down those two keys, press **ON/OFF**. The screen will then indicate: PDR SELF-TEST...
and several diagnostic screens will appear in rapid sequence (see Section 16.0, Resetting/Electronics Checking Mode), ending in the message TESTING COMPLETE. The unit will shut off. When turned on again, the *personal*DataRAM memory will have been reset, as described above.

The **default** values and operating conditions of the *personal*DataRAM are:

- Logging period (LOG INTRVL): 60 seconds
- Logging status: disabled (LOGGING DISABLED)
- Alarm level: 1 mg/m^3

- Alarm status: disabled (ALARM: OFF)
- Analog output: 0 to 4 mg/m^3
- Analog output status: disabled (ANALOG OUTPUT :DISABLED)
- Real-time display averaging time (DIS AVG TIME): 10 seconds
- Calibration factor (CAL FACTOR): 1.00

When turning on the *personal*DataRAM after resetting the instrument, it should be zeroed (see steps 1 and 2 of Section 8.1) before a run is initiated. Otherwise, its internal optical background level will not be subtracted from the indicated concentration readings. Alternatively, if the instrument is not zeroed after resetting, it will indicate its unsubtracted optical background when run under particle free conditions.

9.0 COMMUNICATIONS WITH COMPUTER

9.1 Hardware and Software Requirements

The computer requirements to install the software provided with the *personal*DataRAM (Thermo Electron *p*DR-COM) are the following:

- IBM-PC compatible
- 486, Pentium, or better processor
- Minimum operating system: Windows 95™ or better
- ≥ 8 MB of RAM
- 2 MB of hard drive space
- CD-ROM drive
- VGA or higher resolution monitor

NOTE: When large files are logged in the *personal*DataRAM in one single tag, a faster computer speed is required to handle the data. For example, if all 13,000 data points are logged in one tag, a Pentium I or II processor with a minimum speed of 166 MHz will be required. If, however, the maximum number of data points per tag is 1,000 or below, a 33 MHz, 486 DX processor will suffice.

Thermo Electron custom hardware and software (provided as standard accessories):

- Digital communications cable (Thermo Electron model pDR-DCC)
- CD-ROM disk (Thermo Electron model 100034-00)

9.2 Software Installation Procedure

To install the Thermo Electron provided software in the computer, proceed as follows:

1. Insert the CD-ROM disk labeled "*p*DR-COM" into computer.

2. For Windows 95™ or higher users, select **Start** and then **Run**.
3. Type in on the **Command Line**: **x: install** (where "x" is the CD-ROM drive).
4. The message "**Do you wish to install pDR-COM?**" will appear. Click **OK** to continue, or **Cancel**.
5. A message appears allowing the option to change the default directory:
6. "**C:\PDRCOM**". It is advisable to leave the default directory (unless you address the hard drive by a different letter), and select **OK**.
7. After a successful installation, the message "**Installation Complete!**" will appear.

9.3 Communication Between personalDataRAM and Computer

To effect the communication between the *personal*DataRAM (via the *p*DR-COM software installed in the computer as described in the preceding section) and the PC, proceed as follows:

1. Connect the *personal*DataRAM to one of the computer's serial ports using the *p*DR-DCC cable provided by Thermo Electron. This cable has a 9-pin female connector for the computer port.

2. Key **ON/OFF** the *personal*DataRAM and then key **NEXT** repeatedly until CONNECT TO PC is displayed on the *personal*DataRAM.

3. On the computer, double click on the ***p*DR-COM** icon. A four-tabbed notebook display should appear. Click on the **Com Port Select** and select the port to which the pDR-DCC cable has been connected.

4. From the four-tabbed notebook displayed on the computer screen select the tab with the desired option. The options are:

- **Main:** This page allows the user to input the *personal*DataRAM serial number (or any other desired label), and select the Serial Com Port.

- **Logged data:** This page allows the user to download, tabulate, print data, or transfer to a CSV file the data stored in the *personal*DataRAM. This page also serves to display real-time numerical data when the computer is connected to the *personal*DataRAM in the Run Mode.

- **Graph data:** This page enables the downloading and graphing of stored data to the computer screen and to a printer. In the Run Mode, this page displays the real-time data in graphic format.

- **Configure *p*DR:** This screen allows the user to edit the operating/logging parameters. Click on the item to be edited and select or type in the new value.

To review the parameter values currently programmed into the *personal*DataRAM, click on **Get configuration**. After editing the parameters, click on **Set configuration** to input the new values into the *personal*DataRAM program.

Most operations within *p*DR-COM are self-evidently labeled, including fly-over dialog boxes. In addition, instructions may be found in the On-line Help files by selecting **Help** and then **Contents**.

The following operating/logging parameters of the *personal*DataRAM are selected (edited) via the computer:

- Current date (month and day of the month)
- Current time (hour, minute and second)
- Display averaging time (1 to 60 seconds, in 1-second increments)
- Calibration factor (0.01 to 9.99, in 0.01 increments)
- Logging interval (1 to 14,400 seconds, in 1-second increments)
- Analog output full scale concentration (0.1, 0.4, 1, 4, 10, 40, 100, or 400 mg/m^3)
- Analog output status (enabled, or disabled) (can also be selected directly through *personal*DataRAM keyboard, see Section 8.2)
- Alarm level (0.001 to 409.599 mg/m3, in 1-µg/m^3 increments)
- Alarm mode (Off, Instantaneous, or STEL) (can also be selected directly through *personal*DataRAM keyboard, see Section 8.2)

The serial number of the *personal*DataRAM is transferred automatically to the PC and displayed on its screen.

In addition, the user can input any other identification for the instrument (up to 20 characters).

9.4 Real-Time RS-232 Output

During the RUN mode, the *personal*DataRAM can communicate real-time concentration data through its serial port via the *p*DR-COM software package. This software application decodes the data and displays it on the computer screen in both graphical and tabulated form.

In order to use this output with some other application, the following information will enable the user to decipher the encoded output signal.

The communication settings for the digital output of the *personal*DataRAM are:

- Baud rate: 4800 bps or 9600 bps
- Data bits: 8
- Stop bits: 1
- Parity: none
- Flow control: Xon/Xoff

Every second during a run, the *personal*DataRAM serial port will output a sixteen-character code. It consists of two brackets with 14 hexadecimal digits between them, representing sum check (2 digits), sensed concentration (8 digits), and calibration factor (%, 4 digits). The concentration in $\mu g/m^3$ is obtained by multiplying the sensed concentration times the calibration factor and dividing by 100.

10.0 ANALOG SIGNAL OUTPUT

10.1 Analog Output Description

The *personal*DataRAM incorporates the capability to provide both a voltage and a current signal output directly proportional to the sensed concentration of airborne particulates. Both these analog signal outputs are concurrently available. These outputs are provided, principally, for fixed-point applications with hard-wired installations, such as for continuous HVAC monitoring and control.

The particulate concentration range corresponding to the output voltage and current ranges (0 to 5 V and 4 to 20 mA) can be user selected (via a PC). The most sensitive range available is 0 to 0.100 mg/m^3, and the least sensitive range is 0 to 400 mg/m^3. For example, if the user selects the analog output range of 0 to 0.400 mg/m^3 then the analog output signal levels, at a concentration of 0.200 mg/m^3, would be 2.5 V and 12 mA.

Selection of the concentration range of the analog output must be performed on the PC. This range is independent of the digital display, data logging and real-time digital output range which are controlled automatically (auto-ranging).

Enabling the analog output increases the current consumption from the power source (battery or power supply) of the *personal*DataRAM by typically 5 mA when no load is connected to the analog signal current output. If such a load is connected then the current consumption of the *personal*DataRAM further increases by the magnitude of the output signal current (up to a maximum increment of 20 mA). Therefore, when not using the analog output, it is advisable to disable that output (see Section 8.2) in order to minimize power consumption (this is important only when powering the *personal*DataRAM from a battery source).

10.2 Analog Output Connection

The *personal*DataRAM is provided with a cable (model *p*DR-ANC) which has a 6-contact plug at one end and flying leads at the other. There are 4 leads for the analog and alarm outputs. The additional two contacts of the connector are used only for digital communication with a PC, for which a separate cable (model *p*DR-DCC) is provided.

Counting from top to bottom on the *personal*DataRAM connector receptacle, contact #1 is the positive 4 – 20 mA analog output, contact #2 is the alarm output, contact #5

is the common ground (return for all signals), and contact #6 is the positive 0 – 5 V analog output.

For the 0 – 5 V output signal, the externally connected load must have an impedance of more than 200 kilo-ohms. For the 4 – 20 mA output signal, the externally connected load must have an impedance of less than 200 ohms when powering the *personal*DataRAM with a battery, or less than 300 ohms when using the its AC supply.

Since both voltage and current outputs are present at the same time, both can be used concurrently, if so required.

The accuracy of the analog output signals is better than 1% of the reading with respect to the digital reading.

11.0 ALARM

11.1 Alarm Description and Operation

The *personal*DataRAM alarm function is provided both as an audible signal as well as an electrical output. The audible alarm consists of a series of beeps generated by an on-board piezo-transducer. The electrical output, available at the digital communications port, consists of a 1 Hz square wave signal which can be used to trigger/activate other equipment through an appropriate interface (consult with the factory).

The alarm function can be enabled/disabled by the user through the *personal*DataRAM keyboard (see Section 8.2). Setting of the alarm level must be performed on the PC (see Section 9.0).

The alarm is triggered whenever the preset alarm level is exceeded based either on: a) the displayed real-time concentration, if ALARM: INSTANT was selected (see Section 8.2), or b) a 15-minute running average concentration, if ALARM: STEL was selected. When the concentration falls below that level the alarm condition stops. While the alarm is on the user can stop it (i.e. silence the alarm) by pressing any key of the *personal*DataRAM. If the concentration continues to exceed the set alarm level after 10 seconds, however, the alarm restarts.

11.2 Alarm Output

A pulsed voltage output is available on the *personal*DataRAM in synchronism with the audible signal. This signal consists of a 1 Hz square wave with an amplitude level of 5 V pp. An externally connected load should have an impedance of no less than 100 kilo-ohms. This alarm output signal is available at pins 2 and 5 (counting from top to bottom) of the 6-contact output/communications port on the side of the *personal*DataRAM (see Figure 5 or 6).

11.3 Remote Alarm Unit

An alarm relay unit (Thermo Electron model *p*DR-RA) is available as an optional accessory for the *personal*DataRAM. The *p*DR-RA, when connected to the alarm output of the *personal*DataRAM, provides a switched output triggered by the alarm signal of the monitor. This switched output (up to 8 amperes, 250 volts) can be used to activate or deactivate other equipment (e.g. ventilation systems, machinery, etc.), or to control remotely located (by wire connection) alarm indicators (e.g. buzzers, lights, etc.).

12.0 MAINTENANCE

12.1 General Guidelines

The *personal*DataRAM is designed to be repaired at the factory. Access to the internal components of the unit by others than authorized personnel voids warranty. The exception to this rule is the occasional cleaning of the optical sensing chamber.

Unless a MALFUNCTION message is displayed, or other operational problems occur, the *personal*DataRAM should be returned to the factory once every two years for routine check out, testing, cleaning and calibration.

12.2 Cleaning of Optical Sensing Chamber

Continued sampling of airborne particles may result in gradual build-up of contamination on the interior surfaces of the sensing chamber components. This may cause an excessive rate of increase in the optical background. If this background level becomes excessive, the *personal*DataRAM will alert the user at the completion of the zeroing sequence, as indicated in Section 8.1, by the display of a BACKGROUND HIGH message. If this message is presented, the *personal*DataRAM can continue to be operated providing accurate measurements. However, it is then advisable to clean the interior of the sensing chamber at the first convenient opportunity, proceeding as indicated below.

12.2.1 Model *p*DR-1000AN

- Remove the two screws on the top of the large protective bumper that covers the sensing chamber (see Figure 1);
- Remove the large protective bumper by lifting it firmly upwards and away from the sensing chamber;
- Remove the socket-head screws on the front and back black covers that were exposed by removal of the large top bumper. Lift away the freed front and back covers of the sensing chamber; set them aside carefully and such that they can be reattached in the same position as they were previously; avoid touching the dull black side of these plates;

- Using filtered (particle-free) pressurized air, blow the inside of the sensing chamber taking great care in not marring or scratching any of the exposed surfaces;
- Reposition the two sensing chamber cover plates in the same location (front and back) as they had been originally. Insert and tighten socket head screws firmly making sure that the two plates are aligned perfectly with the top of the sensing chamber;
- Reposition large protective bumper over sensing chamber pushing down until properly seated. Insert the two top screws holding down the bumper and tighten gently (do not over-tighten);
- Check optical background by zeroing the *p*DR-1000AN as indicated in Section 8.1. If the sensing chamber cleaning was performed correctly, the message CALIBRATION: OK should be displayed at the end of the zeroing period.

12.2.2 Model *p*DR-1200

- Remove the two screws (one in the front and one in the back) holding the front and back gasketed covering plates of the sensing chamber, and set these plates aside, such that they may be reattached in the same location as they were previously.
- Using filtered (particle-free) pressurized air, blow the inside of sensing chamber taking great care in not marring or scratching any of the exposed surfaces.
- Reposition the two sensing chamber cover plates in the same location (front and back) as they had been originally. Insert and tighten socket head screws firmly making sure that the two plates are aligned perfectly with the top of the sensing chamber.
- Check optical background by zeroing the pDR-1200 as indicated in Section 8.1. If the sensing chamber cleaning was performed correctly, the message CALIBRATION: OK should be displayed at the end of the zeroing period.

12.3 Cyclone Cleaning (Model *p*DR-1200 only)

The cyclone will require occasional cleaning. It is advisable to do so whenever the sensing chamber of the *p*DR-1200 is cleaned (see above). To clean the cyclone, remove it from its black attachment cup on the sensing chamber, and unscrew the grit pot (narrower knurled end). Use clean pressurized air to blow out the grit pot and through all openings of cyclone body. Reattach grit pot to cyclone body and insert cyclone body into attachment cup making sure it is fully inserted.

13.0 CALIBRATION

13.1 Factory Calibration

Each *personal*DataRAM is factory calibrated against a set of reference monitors that, in turn, are periodically calibrated against a gravimetric standard traceable to the National Institute of Standards and Testing (NIST).

The primary factory reference method consists of generating a dust aerosol by means of a fluidized bed generator, and injecting continuously the dust into a mixing chamber from which samples are extracted concurrently by two reference filter collectors and by two master real-time monitors (Thermo Electron DataRAM 4) that are used for the routine calibration of every *personal*DataRAM.

The primary dust concentration reference value is obtained from the weight increase of the two filters due to the dust collected over a measured period of time, at a constant and known flow rate. The two master real-time monitors are then adjusted to agree with the reference mass concentration value (obtained from averaging the measurements of the two gravimetric filters) to within ±1%.

Three primary, NIST traceable, measurements are involved in the determination of the reference mass concentration: the weight increment from the dust collected on the filter, the sampling flow rate, and the sampling time. Additional conditions that must be met are: a) suspended dust concentration uniformity at all sampling inlets of the mixing chamber; b) identical sample transport configurations leading to reference and instrument under calibration; and c) essentially 100% collection efficiency of filters used for gravimetric reference for the particle size range of the test dust.

The test dust used for the Thermo Electron factory calibration of the *personal*DataRAM is SAE Fine (ISO Fine) supplied by Powder Technology, Inc. It has the following physical characteristics (as dispersed into the mixing chamber):

- Mass median aerodynamic particle diameter: 2 to 3 µm
- Geometric standard deviation of lognormal size distribution: 2.5
- Bulk density: 2.60 to 2.65 g/cm3
- Refractive index: 1.54

13.2 Field Gravimetric Calibration

If desired, the *personal*DataRAM can be calibrated gravimetrically for a particular aerosol (dust, smoke, mist, etc.) under field conditions (actual conditions of use). To effect such calibration in the particle environment of interest, proceed as indicated below.

For field calibration of the model *p*DR-1000AN, a personal type filter sampler is placed side-by-side (collocated) to the *p*DR-1000AN to be calibrated, and the two units should be started simultaneously. For the model *p*DR-1200, its own filter and attached pump can be conveniently used for the same purpose.

- Weigh and load into filter holder a fresh membrane filter.
- Start pump.
- Immediately turn on *personal*DataRAM and start a run such that the pump and the *personal*DataRAM are started nearly simultaneously.

The duration of this comparison run should be sufficient to collect a mass of at least 1 mg on the reference filter (in order to permit accurate weighing of the collected mass by means of an analytical balance). The time-weighted average (TWA) reading of the *personal*DataRAM can be used to estimate the required sampling time to collect the above-mentioned mass on the filter. To estimate the required sampling time (ET as measured on the *personal*DataRAM) in minutes, read the TWA value (see Section 8.3) after an elapsed time (ET) of one minute or more, and apply the following relationship:

$$ET \geq 500/TWA$$

For example, if TWA = 2.5 mg/m^3, then ET ≥ 200 minutes (approximately 3 hours). If the TWA value changes significantly as the run proceeds, recalculate the required ET accordingly.

At the end of the run (after time ET has elapsed), record TWA, ET and the flow rate Q used to sample the air. Weigh the filter on an analytical balance and obtain Δm, the mass increment due to the collected particles.

Calculate the average gravimetric concentration C, as follows:

$$C = 1000\ \Delta m/ETxQ$$

Compare the recorded value of TWA and the calculated value C, and calculate the calibration factor to be programmed into the *personal*DataRAM (see Section 9.0) as follows:

$$CAL\ FACTOR = C/TWA$$

For example, if C was found to be 3.2 mg/m^3, and TWA had been determined to be 2.5 mg/m^3, the CAL FACTOR equals 1.28. Select this value on the PC, as described in Section 9.0. This completes the gravimetric calibration of the *personal*DataRAM for a specific aerosol.

13.3 Scattering Coefficient Calibration

Users interested in using the *personal*DataRAM for scattering coefficient measurements (e.g., for atmospheric visibility monitoring) should contact the factory. A special primary Rayleigh scattering calibration for such purpose can be performed by the factory.

13.4 Internal Span Check

The zeroing procedure (see Section 8.1) and the resulting normal diagnostic display of "CALIBRATION: OK" (step 2) informs the user that the instrument's calibration agrees with the original factory setting. This is an internal span check that consists of an automatic comparison between the initial (factory) optical background of the *personal*DataRAM (registered in its non-volatile memory), and the current optical background sensed during the zeroing sequence.

14.0 PARTICLE SIZE CLASSIFICATION (model *p*DR-1200 only)

The particle size selective cyclone of the *p*DR-1200 provides the user with two important capabilities: a) to measure the particulate matter concentration of a specific aerodynamic size fraction, and b) to determine the mass median size of a particle population. These two applications will be discussed in what follows. For both these applications, a variable measured flow rate pump is required, such as the model *p*DR-PU (for which a separate instruction manual is provided).

14.1 Size Fractionated Monitoring

The *p*DR-1200 can be used to monitor a specific particle size fraction below a selectable cut off equivalent aerodynamic diameter. The particle size cut point can be selected by adjustment of the sampling flow rate. The higher the flow rate through the cyclone the smaller the cut off particle diameter. Figure 7 is a graph showing the dependence of the particle cut off size in micrometers as a function of the sampling flow rate in liters per minute. The cut off size is the particle aerodynamic diameter at which the collection efficiency of the cyclone is 50%, or conversely, the size at which the cyclone transmission is 50%. For example, to obtain a particle size cut off of 2.5 µm (i.e., PM2.5), the required sampling flow rate is 4 liters/minute. A that flow rate only particles smaller than (approximately) 2.5 µm are allowed to pass into the *p*DR-1200 sensing stage, to be monitored and then to be collected on the filter.

As can be seen on Fig. 7, the lowest particle size cut for the GK 2.05 cyclone included with the *p*DR-1200 is about 1 µm, and the largest is about 12 µm. For particle size classification outside this range, consult with the factory.

14.2 Particle Sizing

The selectable particle size capability of the cyclone, in combination with the concentration measuring capability of the photometric system of the *p*DR-1200 permits the user to determine the mass median aerodynamic particle diameter of an aerosol, i.e., of the airborne particle population being sampled.

One simple procedure to determine the median particle size is as follows (please refer to the graph of Fig. 7):

- Remove cyclone from its black attachment cup and set cyclone aside
- Start pump and sample aerosol at a flow rate between 2 and 4 liters/minute
- Press ON key on pDR-1200 panel and after about one minute key NEXT and then ENTER
- After an elapsed time (ET) of about one minute, read and note TWA concentration
- Shut off pump
- Plug in cyclone into its attachment cup

- Start pump and run at about 1 liter/minute. Observe real-time concentration (CONC) reading
- Increase flow rate very slowly and gradually until CONC reading is one-half of the initial concentration measured without the cyclone. Continue sampling at this flow rate for about one minute and confirm that TWA reading is about one-half of the initial one. Otherwise readjust flow rate. Note final flow rate at which the TWA value has decreased to one-half the value noted without the cyclone.
- Enter the final flow rate for which the TWA value is one-half of the initial value into the graph of Fig. 7 and read the corresponding D50 particle size in micrometers. This represents the mass median particle diameter of the aerosol.

For example, if the TWA value without the cyclone was 0.8 mg/m^3, and the flow rate (with the cyclone attached) required to reduce the TWA to 0.4 mg/m^3 is 2 liters/minute, the mass median particle size (as obtained from the curve of Fig. 7) is approximately 5.5 μm.

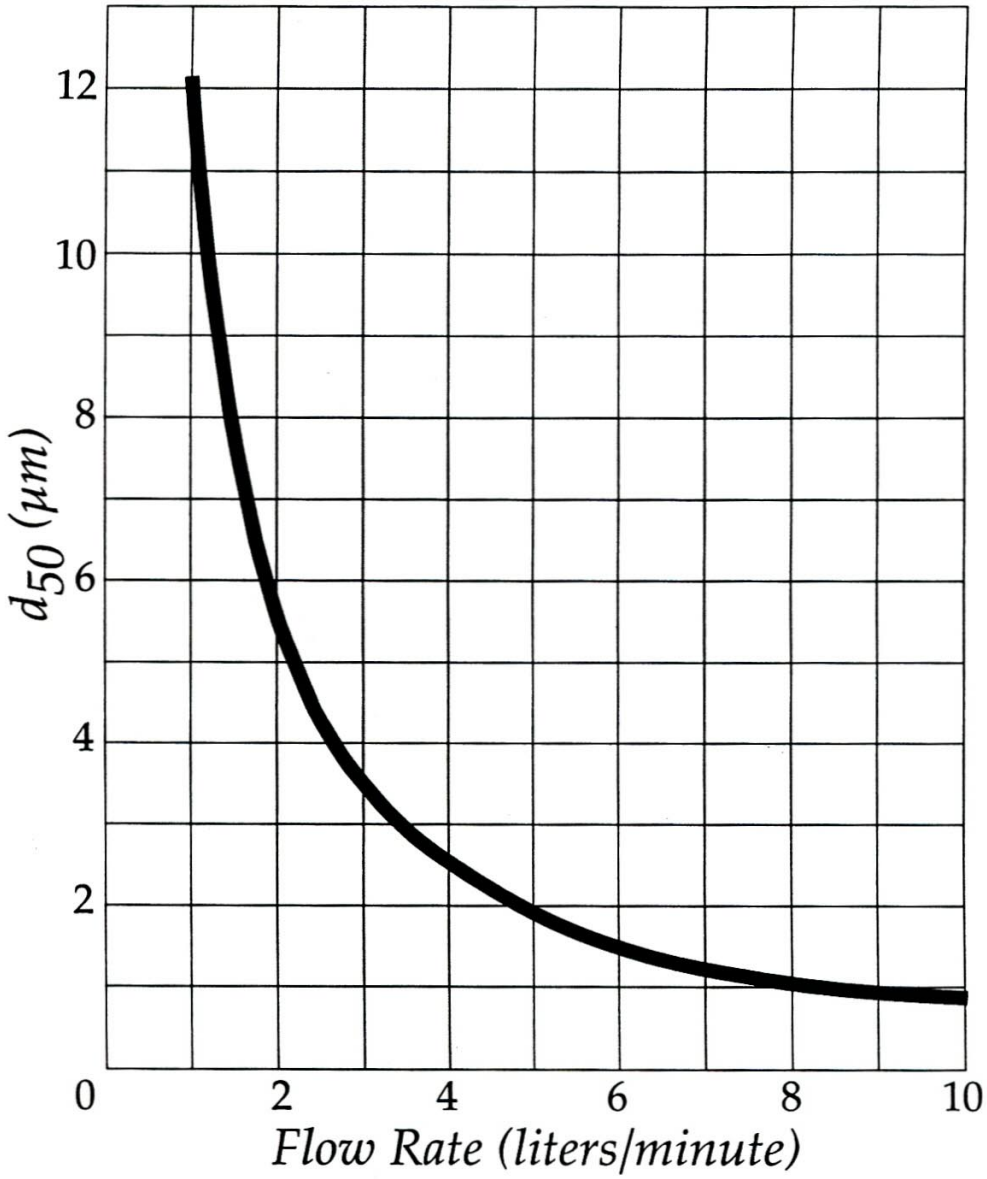

Figure 7. GK 2.05 Cyclone Cut Point (d_{50}) as a Function of Flow Rate

15.0 CONVERSION BETWEEN *personal*DataRAM VERSIONS

The *personal*DataRAM user has the option to convert from a model *p*DR-1000AN to a model *p*DR-1200 or vice versa using the appropriate conversion kit. To convert from a *p*DR-1000AN to a pDR-1200 (i.e., from a passive air sampling configuration to an active one), the user requires the model *p*DR-AS conversion kit. To convert from a *p*DR-1200 to a *p*DR-1000AN (i.e., from an active air sampling configuration to a passive one), the user requires the model *p*DR-UB conversion kit.

15.1 Conversion Procedure From *p*DR-1000AN to *p*DR-1200

To effect this conversion, use model *p*DR-AS conversion kit. As you remove parts from the *p*DR-1000AN, in order to attach the conversion kit components, store these parts carefully for possible future re-conversion. Proceed as follows:

- Remove the two screws on the top of the large protective bumper that covers the sensing chamber (see Figure 1). This bumper is not used on the *p*DR-1200;
- Remove the large protective bumper by lifting it firmly upwards and away from the sensing chamber;
- Reinsert in the upper two threaded holes and tighten the two screws that had held the protective bumper;
- Remove the socket-head screws on the front and back black covers that were exposed by removal of the large top bumper. Lift away the freed front and back covers of the sensing chamber; store them carefully for future use, ensuring that their surfaces are not scratched or marred;
- Position one of the two gasketed (soft rubber) sensing chamber cover plates provided in the conversion kit on the front side of the sensing chamber. Insert and tighten the included socket head screw firmly making sure that the plate is aligned perfectly with the top of the sensing chamber. Similarly, attach the other cover plate on the back side of the sensing chamber;
- Identify the two black cups of the *p*DR-AS conversion kit. One of them has an external o-ring (filter holder cup), and the other has no o-ring (cyclone cup); refer to Figures 2 and 4 for the location of these cups on the *p*DR-1200 sensing chamber. These cups can be installed on either side of the sensing chamber, i.e., the cyclone can be either on the left or the right side of the sensing chamber (Figure 2 shows the case where the cyclone is on the right side);
- Attach one cup to the left side of the sensing chamber using the two black socket head screws. Tighten screws firmly. Similarly, attach the other cup to the right side of the sensing chamber;
- Take the cyclone/filter holder unit provided as part of the conversion kit, and separate the 37-mm plastic filter holder from the metal cyclone by firmly pulling the two units apart;
- Carefully slide the large open end of the plastic filter holder over the cup with the external o-ring, previously attached to the sensing chamber. Ensure that the cup is fully inserted into the filter holder;

- Carefully insert the large diameter open end of the metal cyclone into the other cup on the opposite side of the sensing chamber. The cyclone inlet (small short metal tube on side of cyclone) can be oriented as desired (upwards, as shown in Figure 2, sideways, downwards, etc.). Ensure that the cyclone is fully inserted into the cup;
- When ready to operate, connect a length of tubing between the barbed fitting at the downstream end of the plastic filter holder and the pump to be used in combination with the *p*DR-1200.
- Perform a zeroing sequence (see Sections 6.5.2 and 8.1) before starting a run. This completes the conversion of the *p*DR-1000AN to the *p*DR-1200.

15.2 Conversion Procedure from *p*DR-1200 to *p*DR-1000AN

To effect this conversion use model *p*DR-UB conversion kit. As you remove parts from the *p*DR-1200, in order to attach the conversion kit components, store these parts carefully for possible future re-conversion. Proceed as follows:

- Pull off both the cyclone and the filter holder from their respective cups on the two sides of the sensing chamber;
- Loosen the two screws that hold each of the two cups on the sides of the sensing chamber (total of 4 screws), and remove the two side cups;
- Loosen the single screw on each of the two (front and back) gasketed sealing covers enclosing the sensing chamber, and remove the two covers;
- Identify the two flat sensing chamber cover plates provided in the conversion kit; one face of each of each of these two plates has a dull black finish (antireflective); avoid touching those surfaces;
- Position one of the two sensing chamber cover plates over the open front of the sensing chamber with the dull surface on the inside, and such that the hole in the plate is aligned with the corresponding threaded mounting hole on the upper wall of the sensing chamber. Insert and tighten firmly black socket head screw provided with the conversion kit, making sure that the plate is aligned perfectly with the top of the sensing chamber. Similarly, attach the other cover plate to the rear of the sensing chamber, with the dull surface facing inward;
- Loosen and remove the two small screws on the top surface of the sensing chamber;
- Position large protective bumper (provided in the conversion kit) over sensing chamber pushing down until properly seated. Insert the two top screws (two shiny Phillips-head screws provided in the conversion kit) into the two holes in the bumper while holding down the bumper, and tighten gently (do not over-tighten) making sure that the heads of these screws are well inside their cavities in the bumper;
- Perform a zeroing sequence (see Sections 6.5.1 and 8.1) before starting a run. This completes the conversion from a *p*DR-1200 to a *p*DR-1000AN.

16.0 SEQUENCE OF KEYSTROKES AND SCREENS (*p*DR-1000AN/1200, ADR-1200S and HPM-1000)

Start-Up and Survey Run Mode (Without Data Logging)

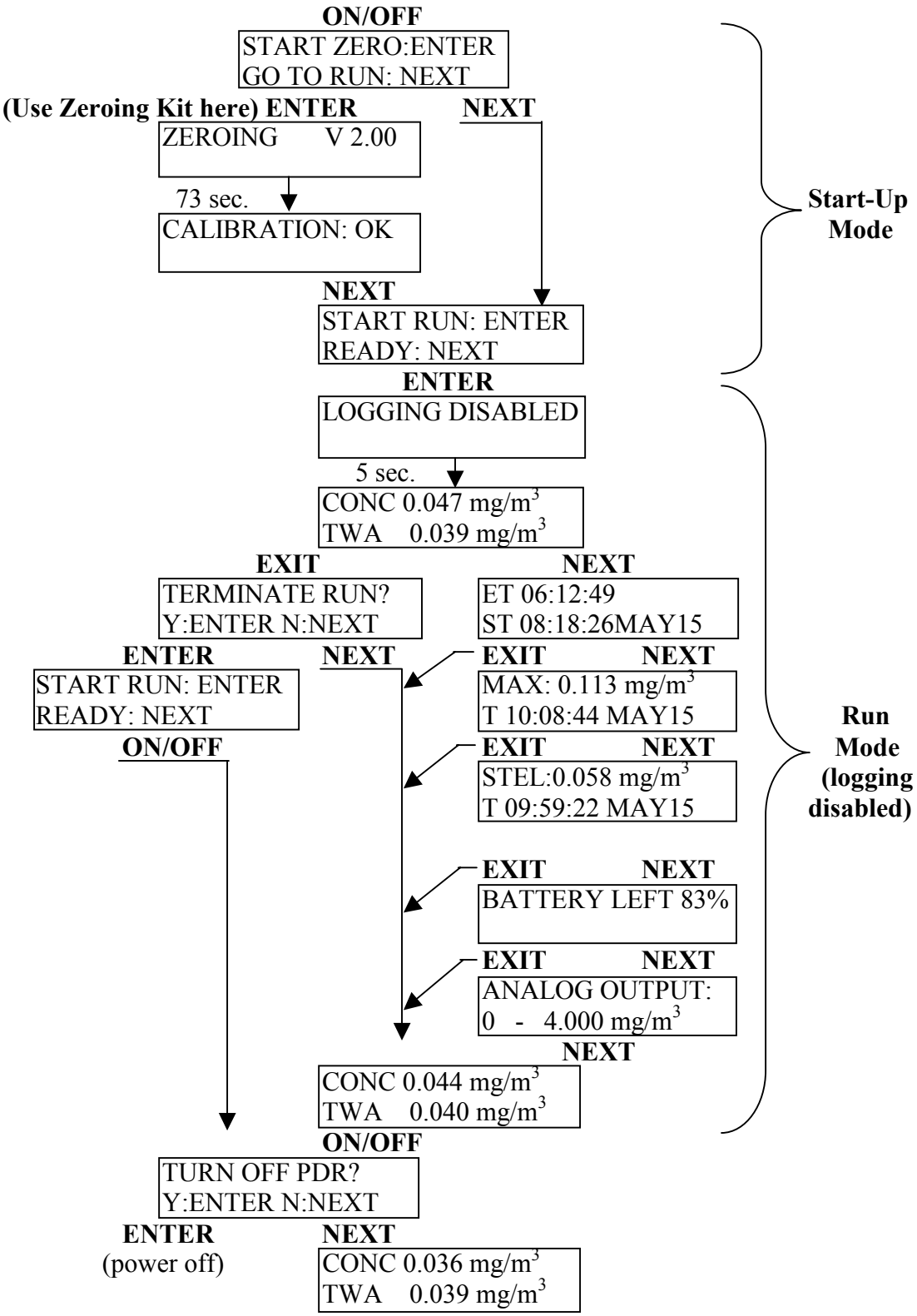

Start-Up, Set-Up and Run Mode (With Data Logging)

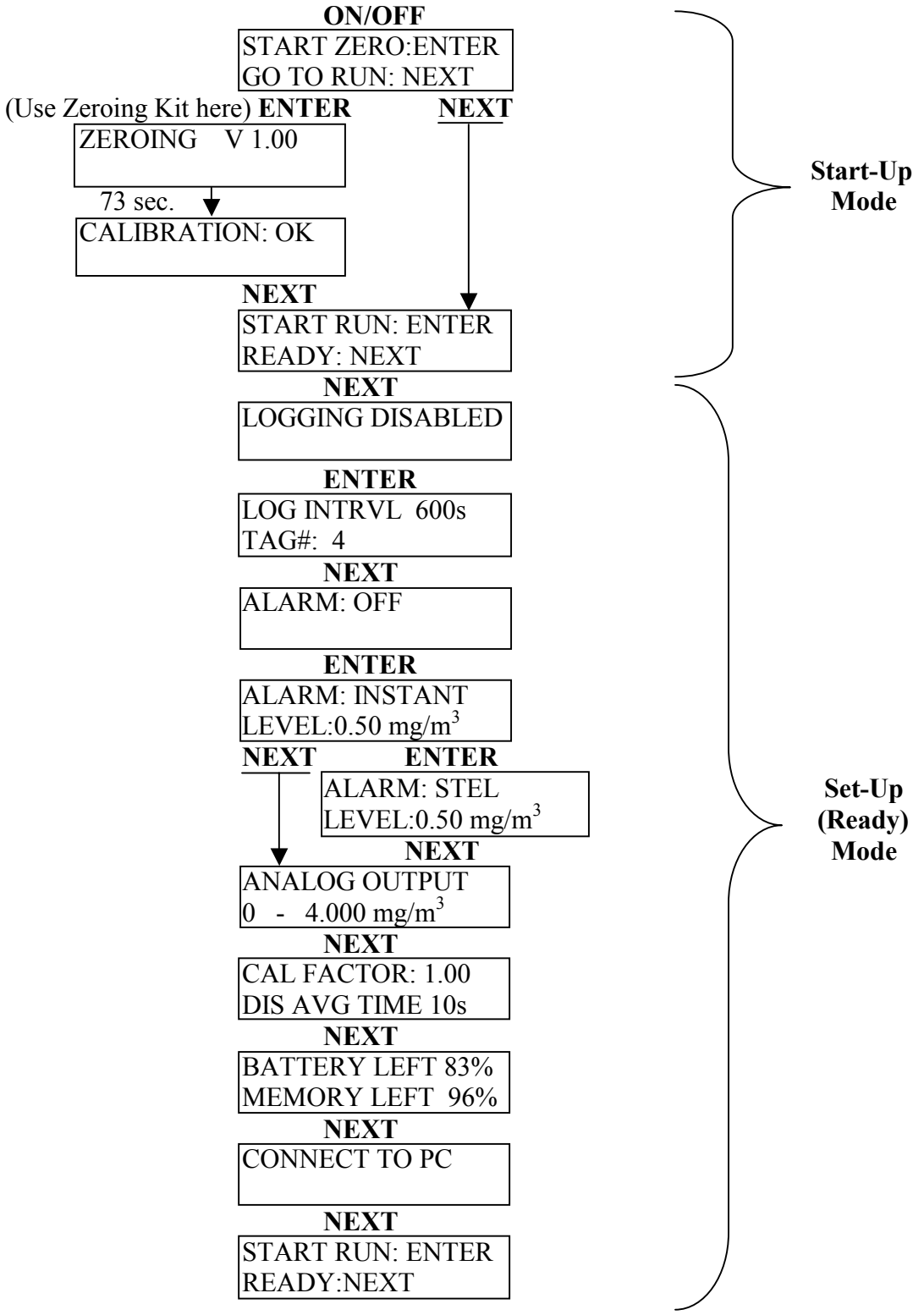

(Continues on next page)

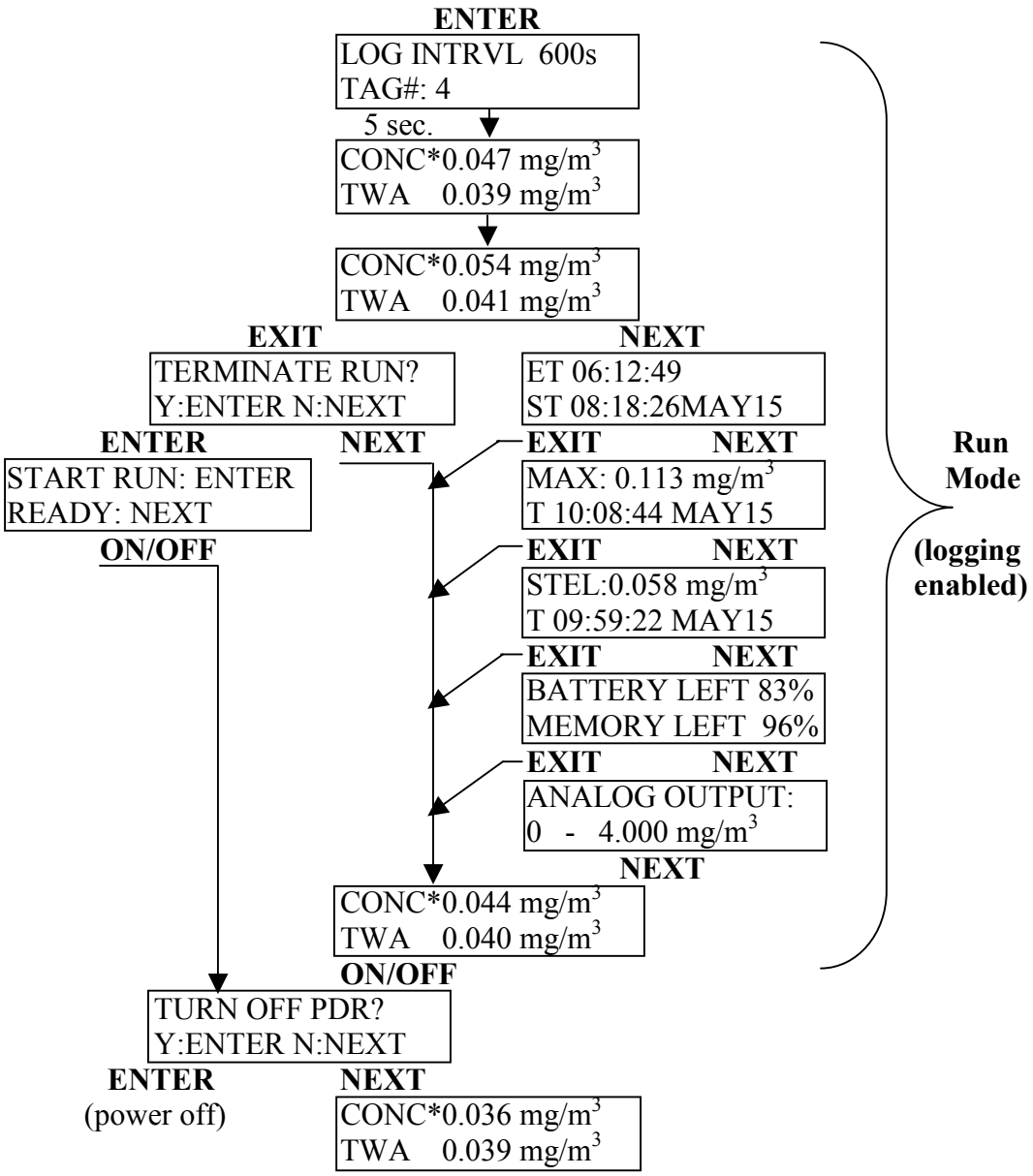
ENTER
LOG INTRVL 600s
TAG#: 4
5 sec.
CONC*0.047 mg/m3
TWA 0.039 mg/m3
CONC*0.054 mg/m3
TWA 0.041 mg/m3
EXIT
NEXT
TERMINATE RUN?
Y:ENTER N:NEXT
ET 06:12:49
ST 08:18:26MAY15
ENTER
NEXT
START RUN: ENTER
READY: NEXT
EXIT
NEXT
MAX: 0.113 mg/m3
T 10:08:44 MAY15
ON/OFF
EXIT
NEXT
STEL:0.058 mg/m3
T 09:59:22 MAY15
EXIT
NEXT
BATTERY LEFT 83%
MEMORY LEFT 96%
EXIT
NEXT
ANALOG OUTPUT:
0 - 4.000 mg/m3
NEXT
CONC*0.044 mg/m3
TWA 0.040 mg/m3
Run Mode
(logging enabled)
ON/OFF
TURN OFF PDR?
Y:ENTER N:NEXT
ENTER
(power off)
NEXT
CONC*0.036 mg/m3
TWA 0.039 mg/m3

Table of Contents

WARRANTY ..... **iv**

1.0 GENERAL DESCRIPTION **1**
2.0 SPECIFICATIONS **3**
3.0 USER GUIDELINES **6**
3.1 Handling Instructions 6
3.2 Safety Instructions 6
3.3 Handling and Operation 6
3.3.1 Model *p*DR-1000AN 6
3.3.2 Model *p*DR-1200 7
3.4 Air Sampling Guidelines 8
3.5 Environmental Constraints and Certifications 8
4.0 ACCESSORIES **8**
4.1 Standard Accessories 8
4.2 Optional Accessories 9
5.0 INSTRUMENT LAYOUT **9**
5.1 Front Panel 10
5.2 Bottom Base 14
5.3 Right Side Panel 14
5.4 Back Panel and Belt Clip 17
5.5 Sensing Chamber 17
6.0 PREPARATION FOR OPERATION **17**
6.1 Battery Installation 17
6.2 Battery Replacement 18
6.3 AC Power Supply 18
6.4 Rechargeable Battery Module 19
6.5 Zeroing the *personal*DataRAM 19
6.5.1 Zeroing the model *p*DR-1000AN 19
6.5.2 Zeroing the model *p*DR-1200 20
6.6 *p*DR-1200 Filter Holder Installation 21

Resetting/Electronic Checking Mode

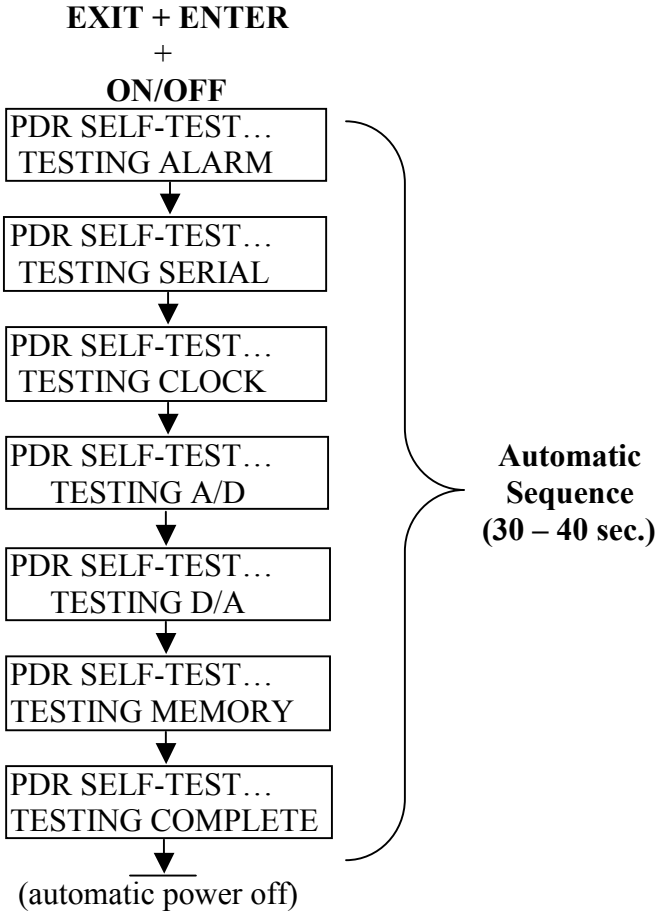

NOTE: After the preceding resetting sequence, the instrument should be zeroed; otherwise its optical background will remain unsubtracted.

17.0 SERVICE LOCATIONS

For additional assistance, Environmental Instruments Division has service available from exclusive distributors worldwide. Contact one of the phone numbers below for product support and technical information.

866-282-0430 Toll Free
508-520-0430 International

SUPERFUND TECHNICAL ASSESSMENT RESPONSE TEAM
STANDARD OPERATING PROCEDURES

SOP 301
DECONTAMINATION PROCEDURES

1.0 PURPOSE

To provide guidance for the decontamination of equipment used to sample, and install sample, and install sample points (monitor wells, soil borings and test pits), and make field measurements. This operating practice is not intended to be site specific or equipment specific, but to provide guidance in place of non-existent state or federal guidelines.

2.0 DISCUSSION

2.1 Introduction

The objective of decontamination procedures is to provide clean equipment for the retrieval of representative environmental samples. Decontamination procedures differ depending on the nature of the equipment used. The three categories of decontamination procedures are discussed below:

- Intrusive equipment used to install sample points including drilling (tools, augers, rods, etc.) and excavation equipment (backhoes, excavators, etc.).

- Equipment used to measure the characteristics of the media to be sampled including water level, pH, specific conductivity, and temperature probes. This category also includes pumps to purge water.

- Equipment that has contact with the sample to be submitted for laboratory analysis including bailer, split-spoons, hand auger, stainless steel bowls and scoops.

Because items from the first two categories do not contact the sample media that is sent to a laboratory for analysis, the decontamination procedures are less stringent. Dedicated and disposable equipment will be used whenever feasible to limit decontamination and the possibility of cross-contamination. This includes rope, tubing, filterware and, in some cases, soil scoops and bailers.

3.0 PROCEDURES

3.1 Intrusive Equipment

Drilling tools, including augers, rods, drill bits, hand tools, etc. will be steam cleaned prior to use and after each location. Split spoons will also be steam cleaned if not used

for sample collection. Backhoe buckets and arms will also be steam cleaned prior to use and between each sample location.

3.2 Field Measurement Equipment

Water level probes will be cleaned using the following procedures:

- Wipe the probe with a paper towel.
- Alconox and potable water wash.
- Deionized water rinse.

Other measurement equipment should be rinsed with deionized water between readings.

Pumps used for well purging shall be decontaminated using the following procedures:

- Alconox and potable water scrub and pump through.
- Potable water rinse and pump through.

Rope and tubing used with the pump will be made of polyethylene and be dedicated (and disposable) to one sample location.

3.3 Sampling Equipment

Equipment used for sample collection include but are not limited to:

- Teflon bailers.
- Stainless steel scoops and bowls.
- Hand augers.
- Split spoons.

This equipment will be cleaned using the following procedures:

- Alconox and potable water scrub.
- Thorough potable water rinse.
- Deionized water rinse.
- Total air dry

Sampling instruments should be wrapped in aluminum foil after decontamination to keep clean before sampling.

4.0 DOCUMENTATION

Decontamination efforts should be documented in the field logbook. Decontamination fluids should be disposed of properly. Depending on site conditions, it may be appropriate to contain spent decontamination fluids. In that case, the appropriate vessel (i.e., drum) should be used depending on the ultimate disposition of the material.

5.0 INTERPRETATION

If there are questions on the interpretation or applicability of items in this operating practice, the Project Manager or Technical Manager should be consulted. In the absence of either of those, contact a Section Manager.

6.0 REFERENCES

New Jersey Department of Environmental Protection and energy Field Sampling Procedures Manual, May 1992.

" Standard Practice for Decontamination of Field Equipment Used at Non-radioactive Waste Sites" , ASTM Designation D5088-90.

SUPERFUND TECHNICAL ASSESSMENT RESPONSE TEAM
STANDARD OPERATING PROCEDURE

SOP 405
WIPE SAMPLE COLLECTION

1.0 INTRODUCTION

The following Standard Operating Procedure (SOP) has been prepared to assist Roy F. Weston, Inc. (WESTON®), Superfund Technical Assessment Response Team (START) personnel with the collection of wipe samples. This SOP outlines the recommended protocol and equipment for the collection of representative wipe samples to monitor potential surficial contamination.

Wipe sampling is appropriate for surface contamination with non-volatile species of analytes (i.e., PCBs, PCDD, PCDF, metals, cyanides, etc.). The typical sampling area is 25 cm x 25 cm; however, based upon the sample size, sampling location, surface condition, and configuration, the sampling area can be modified. The sample size is determined based upon the detection limit required by the chosen analytical method.

2.0 MATERIALS REQUIRED

The following materials are required to collect representative wipe samples:

- Personal protective equipment (as specified in the Health and Safety Plan)
- Sampling plan
- Maps/sketches
- Logbook
- Ball-point pen
- Permanent marker
- Tape measure
- Digital camera or a camera with film
- Pre-cleaned sample jars of appropriate size with Teflon™-lined caps
- Sterile wrapped gauze pad (10 cm x 10 cm)
- Laboratory grade hexane (pesticide/HPLC grade)
- Pre-cleaned stainless steel forceps
- Customized card-stock templates
- Chain-of-custody forms and custody seals
- Hidden hazard declaration form
- Sample labels/tags
- Ziploc® bags
- Shipping container

- Vermiculite
- Field/trip blank
- Decontamination equipment (brushes, buckets, garden sprayer, phosphate-free soap, water, etc.)
- Air monitoring equipment
- Plastic garbage bag
- Shipping documents (Federal Express forms, etc.)
- Shipping labels
- Strapping tape

3.0 GENERAL PRECAUTIONS

Follow the appropriate section of the site specific health and safety plan (HASP) during the collection of the samples.

4.0 SAMPLING PROCEDURES

This method of sampling has few significant problems. Typical problems result from rough, porous or irregular surfaces which may be difficult to wipe. Note that split wipe samples cannot be collected. Also, take proper care not to contaminate sampling equipment with the contaminated surfaces.

1. Obtain the required consent from the potentially responsible party (PRP) for Site Inspection (SI) sampling.
2. Perform air monitoring and general site survey in accordance with the site specific health and safety plan (HASP) prior to site entry.
3. Mark and identify all sampling locations.
4. Set up a decontamination station.
5. Decontaminate or pre-clean equipment and ensure that it is in working order.
6. Wear surgical gloves. *Remember to wear a new pair of gloves for each sample location.*
7. Collect a wipe sample by using a gauze pad (10 cm x 10 cm) soaked in a jar with a solvent, generally, hexane. *No liquid should be visible in the jar.*
8. Place the customized template on the designated surface to be sampled.
9. Open the sampling jar containing the moistened gauze pad.
10. Hold the gauze pad with a pair of pre-cleaned stainless steel forceps and thoroughly swab the area inside the template. The gauze shall be first moved vertically and then horizontally with even strokes to ensure complete surface coverage.
11. Place the pad into a pre-cleaned glass sample jar and top with a Teflon™-lined cap.
12. Place a custody seal across the cap of the jar.
13. Decontaminate the outside of the sampling jars following the sample decontamination procedure in the sampling plan.
14. Attach appropriate sample labels to outside of the jars and mark the sample number on the outside of the sampling jar.
15. Identify the sampling location on the sample location map and photograph the locations. If required, survey the sampling location with reference to fixed objects

for future reference.

16. Record all pertinent data in the site logbook.
17. Place the sample jar in a Ziploc® bag and store the sample out of direct sunlight to reduce photo-degradation.
18. Collect the remaining wipe samples following the aforementioned procedures.
19. Exit the contamination zone. Follow proper personal decontamination procedures.
20. Complete the chain-of-custody forms and hidden hazard declaration forms.
21. Place the chain-of-custody forms and hidden hazard declaration forms in a Ziploc® bag and attach the bag to the inside of the cooler/container lid.
22. Decontaminate the reusable sampling equipment following the procedures specified in the sampling plan.
23. Collect all investigation derived waste (IDW) and dispose according to START SOP No. 406, Investigation Derived Waste Sampling.
24. Hand-deliver or ship the samples to the laboratory following proper Department of Transportation (DOT) and/or International Air Traffic Association (IATA) requirements.

5.0 REFERENCE

EPA. 1991. *Compendium of Emergency Response Team (ERT) Chip, Wipe and Sweep Sampling Procedures.* Office of Solid Waste and Emergency Response, Washington, DC. EPA/540/P-91/008.

APPENDIX B

LABORATORY SOPs

Clark, Alex

From: Chuck Sueper [Chuck.Sueper@pacelabs.com]
Sent: Monday, April 14, 2008 5:59 PM
To: Korobka, Linda
Cc: Ed Kehoe; Scott Unze; Clark, Alex; Balla, Tonya
Subject: RE: Dilutions - WESTON needs a step by stepapproachdescription

Yes, in all cases the internal standards are added before Soxhlet extraction. Standards are not used in the screen since the ECD would not differentiate between them and the unlabeled isomers. They are two separate extracts.

Chuck

>>> "Korobka, Linda" <Linda.Korobka@WestonSolutions.com> 04/14/08 3:58 PM >>>

Chuck,

Your dilution scheme looks good but can you spike with Internal Standards (before extraction) the High Concentration samples so we do not loose this QC audit?

Linda Korobka

-----Original Message-----
From: Chuck Sueper [mailto:Chuck.Sueper@pacelabs.com]
Sent: Monday, April 14, 2008 4:02 PM
To: Korobka, Linda
Cc: Ed Kehoe; Scott Unze; Clark, Alex; Balla, Tonya
Subject: RE: Dilutions - WESTON needs a step by step approachdescription

Hi Linda:

Have a look at the following and see if it will work for you.

Sample test extracts from this project will be screened by GC-ECD as a preliminary screen for potentially high level samples. These extracts do not follow method protocols and are performed only to give gross estimates of potential sample levels. Based on these results, Pace will extract either the standard 10 gram dry sample weight or a 1 gram sample weight for projected high level samples. In cases where the screen testing suggests extremely high analyte levels, the extracts will be diluted prior to analysis by HRMS. If the expected levels are not present, as determined by HRMS, the affected extracts will be analyzed without dilution (if possible based on matrix effects).

Let me know if you feel changes are needed.

Chuck

Chuck Sueper
Pace Analytical Services
(612) 607 6387

>>> "Korobka, Linda" <Linda.Korobka@WestonSolutions.com> 04/11/08 1:32 PM >>>
Chuck,

10ppt project quality objects for all congeners as written in the QAPP.

So, if you see a high concentration sample in your screen then what will be your actions?

I thought you were going to try a dilution first (at ?X) then maybe re-extract and try a

smaller weight.

Please right up a short paragraph of a step by step approach to samples screening high and possible very high.

Thanks.

Linda Korobka

-----Original Message-----
From: Chuck Sueper [mailto:Chuck.Sueper@pacelabs.com]
Sent: Friday, April 11, 2008 11:45 AM
To: Korobka, Linda
Cc: Ed Kehoe; Mary Christie; Scott Unze
Subject: Dilutions

Hi Linda:

Our plan for the dilutions is as follows:

Normal levels - Extract 10 gram dry weight, gives quantitation limit of 1 ppt for tetras, 5 ppt for penta - hepta and 10 ppt for octa. We normally see well below those levels.

High levels - Extract 1 gram dry weight, dilute further based on screen results. We can normally meet the signal strength requirements for all internal standards with dilutions up to around 50X. We can sometimes go as far as 200X for specific isomers. We do sometimes see isotope ratio issues for labeled standards when the native isomer is present at extremely high levels. If this is a major concern, we could take the extract to a larger known volume, remove an aliquot and add more internal standards. In this case you loose the built in accuracy of isotope dilution corrections, but gain better signals on internals. I would only recommend this approach for extremely high levels.

Does the 10 ppt quality objective apply to only TCDD/TCDF or to a larger list of isomers? This information is useful in determining actions in marginal cases.

Wipe samples are prepared following the solid sample section of the SOP with values determined on surface area instead of weight.

Hopefully this helps,

Chuck

Chuck Sueper
Pace Analytical Services
(612) 607 6387

The email and documents accompanying this transmission contain confidential information belonging to the sender who is legally privileged. The information is intended only for the use of the individual(s) or entity(ies) named herein. If you are not the intended recipient, you are hereby notified that any disclosure, copying distribution or the taking of any action in reliance on the contents of this information is strictly prohibited. If you have received this in error, please immediately notify us by telephone (1.888.990.PACE) to arrange for return of the original documents.

This email has been scanned by the MessageLabs Email Security System.
For more information please visit http://www.messagelabs.com/email

The email and documents accompanying this transmission contain confidential information belonging to the sender who is legally privileged. The information is intended only for the use of the
individual(s) or entity(ies) named herein. If you are not the intended recipient, you are hereby notified that any disclosure, copying distribution or the taking of any action in reliance on the contents of this information is strictly prohibited. If you have received this in error, please immediately notify us by telephone (1.888.990.PACE) to arrange for return of the original documents.

COMPANY CONFIDENTIAL: This e-mail and attachments may contain information which is company confidential and proprietary. Disclosure or use of any such information without the written permission of Weston Solutions, Inc. is strictly prohibited. If you received this e-mail in error, please notify the sender by return e-mail and delete this e-mail from your system. Thank You.

This email has been scanned by the MessageLabs Email Security System.
For more information please visit http://www.messagelabs.com/email

---

The email and documents accompanying this transmission contain confidential information belonging to the sender who is legally privileged. The information is intended only for the use of the individual(s) or entity(ies) named herein. If you are not the intended recipient, you are hereby notified that any disclosure, copying distribution or the taking of any action in reliance on the contents of this information is strictly prohibited. If you have received this in error, please immediately notify us by telephone (1.888.990.PACE) to arrange for return of the original documents.

Pace Analytical Services, Inc.
1700 Elm Street, Suite 200
Minneapolis, MN 55414

Phone: 612.607.1700
Fax: 612.607.6444

STANDARD OPERATING PROCEDURE

Preparation and Analysis of Samples for the Determination of Dioxins and Furans by USEPA Method 1613B

SOP NUMBER:	S-MN-H-002-Rev.09
EFFECTIVE DATE:	Date of Final Signature
SUPERSEDES:	S-MN-H-002-Rev. 08

APPROVAL

Laboratory General Manager	10Apr2008 Date
Quality Assurance Manager	11 Apr 2008 Date

ANNUAL REVIEW

SIGNATURES BELOW INDICATE NO CHANGES HAVE BEEN MADE SINCE APPROVAL. SOP IS VALID FOR ONE YEAR FROM DATE OF LAST SIGNATURE.

Signature	Title	Date
Signature	Title	Date

© 2002 - 2008 Pace Analytical Services, Inc. This Standard Operating Procedure may not be reproduced, in part or in full, without written consent of Pace Analytical Services, Inc. Whether distributed internally or as a "courtesy copy" to clients or regulatory agencies, this document is considered confidential and proprietary information.

Any printed documents in use within a Pace Analytical Services, Inc. laboratory have been reviewed and approved by the persons listed on the cover page. They can only be deemed official if proper signatures are present.

This is **COPY#** __1___ distributed on 11Apr2008_ by __MRO___and is _____**CONTROLLED or** __X__**UNCONTROLLED.**

Table of Contents

1. PURPOSE 1
2. SCOPE AND APPLICATION 1
3. SUMMARY OF METHOD 1
4. INTERFERENCES 1
5. SAFETY 2
6. DEFINITIONS 3
7. SAMPLE COLLECTION, PRESERVATION AND HANDLING 3
8. EQUIPMENT AND SUPPLIES 3
9. REAGENTS AND STANDARDS 5
10. CALIBRATION 12
11. PROCEDURE 14
12. QUALITY CONTROL 35
13. METHOD PERFORMANCE 39
14. POLLUTION PREVENTION AND WASTE MANAGEMENT 40
15. REFERENCES 40
16. TABLES, DIAGRAMS, FLOWCHARTS, APPENDICES, ADDENDA, ETC. 40
17. REVISIONS 40

PURPOSE

1.1 To describe the standard operating procedure for the preparation, analysis, processing and reporting of samples for the determination of dioxins and furans using USEPA Method 1613B.

1.2 If earlier versions of this method are requested (Method 1613, Method 1613A), this standard operating procedure will be followed with applicable modifications from the referenced method.

2. SCOPE AND APPLICATION

2.1 Stable isotopically labeled analogs of 15 of the PCDDs and PCDFs are added to each sample. Samples containing coarse solids are prepared for extraction by grinding or homogenization. Water samples are extracted in separatory funnels. Soils and other finely divided solids are extracted using Soxhlet extraction apparatus. Drinking water samples may be analyzed using the current version of SOP MN-H-003.

2.2 After extraction, $^{37}Cl_4$-labeled 2,3,7,8-TCDD is added to each extract to measure the efficiency of the cleanup process. Sample cleanup may include back extraction with acid and/or base, alumina, silica gel, and activated carbon chromatography. HPLC can be used for further isolation of the 2,3,7,8 isomer or other specific isomers or congeners.

2.3 Samples are spiked with two labeled recovery standards that are used to determine the portion of the analytes and internal standards that survived the extraction and enrichment processes. The extracts are then analyzed using high resolution gas chromatography/high resolution mass spectrometry to determine the concentration of PCDDs and PCDFs present in the samples.

2.4 This procedure is limited to the analysis of the dioxin and furan compounds listed in Attachment 5.

2.5 The accuracy of the method can be affected by matrix interferences, especially for non-isotope dilution analytes.

2.6 This method is also applicable with blood serum samples.

3. SUMMARY OF METHOD

3.1 Method 1613 was written primarily for use on water, sludge, and pulp samples. The approach outlined below has been determined to apply to soil, fly ash, tissue, waste materials, and food and feed product. This method can be expected to apply to most other matrices as well.

4. INTERFERENCES

4.1 Most samples analyzed for PCDD/PCDF content contain other organic compounds that will interfere with or contaminate the mass spectrometric instrumental system. Therefore, after initial extraction, extracts are taken through the enrichment steps outlined in the "Extract Enrichment" section of this procedure. Exceptions to performing the optional enrichment step of acid/base and carbon column cleanup steps may be made with consultation of the laboratory manager and are usually limited to water matrices. The acid clean-up procedure is used to remove lipids in tissue samples and may not be omitted for this matrix.

4.2 Matrix interferences may be caused by contaminants (particularly chlorinated biphenyl ethers) co-extracted from the sample and will vary considerably from source to source. These biphenyl ethers rearrange in the mass spectrometry source to form dibenzofurans.

4.3 Some samples may contain levels of interfering compounds, which overload the analyte enrichment columns. Consult the project manager for alternate procedures should this occur.

4.4 Rigorous glassware cleaning techniques must be used and method blank data must be monitored to evaluate the effectiveness of the glassware cleaning techniques.

4.5 HPLC grade solvents must be used for extractions. Solvents having new lot numbers must be screened for contamination prior to use by analyzing a solvent blank by the applicable analytical methods.

4.6 Raw data from all blanks, samples, and spikes are evaluated for interferences. Determine if the source of interferences is in the preparation and/or cleanup of the samples and take corrective action to eliminate the problem.

4.7 If chromatographic interferences are present (specifically, matrix components that interfere with the determination of PCDDs or PCDFs), the area from the least affected signal of the pair is used along with the theoretical ratio to determine the area of the second ion. These values are then used to calculate the estimated maximum concentration that is then reported as the estimated maximum possible concentration (EMPC).

4.8 Some interferences may be reduced by analysis of a dilution of the extract.

5. SAFETY

5.1 The toxicity or carcinogenicity of each reagent used in this method has not been fully established. Each chemical should be regarded as a potential health hazard and exposure should be as low as reasonably achievable. Cautions are included for known extremely hazardous materials.

5.2 Each laboratory is responsible for maintaining a current awareness file of OSHA regulations regarding the safe handling of the chemicals specified in this method. A reference file of Material Safety Data Sheets (MSDS) must be made available to all personnel involved in the chemical analysis. The preparation of a formal safety plan is also advised.

5.3 MSDS sheets are located at the front desk and must be consulted prior to handling samples and standards.

5.4 The 2,3,7,8-TCDD isomer has been found to be acnegenic, carcinogenic, and teratogenic in laboratory animal studies. Therefore, only highly trained personnel thoroughly familiar with handling and cautionary procedures and who understand the risks associated with this procedure will handle all PCDDs and PCDFs.

5.5 Neat PCDDs and PCDFs require the use of respirators and are <u>not</u> to be handled in the laboratory.

5.6 Protective equipment must be worn when working with standards or samples under this procedure. This includes safety glasses, laboratory coat, and throwaway plastic gloves. Plastic sleeves, aprons, and other protective equipment are also readily available if needed. All steps of this procedure must be performed in a properly operating fume hood except those noted.

5.7 All personnel performing any part of this procedure must be properly trained in removing contaminated materials and properly disposing of them. This includes an awareness of personal hygiene as it pertains to the laboratory, personal actions as they affect coworkers, etc.

5.8 All samples analyzed by the Minnesota laboratory are held until analytical results have been reported. Samples containing PCDD/PCDFs above the allowable levels are labeled, segregated, and disposed of by personnel trained in handling toxic waste. Similarly grossly contaminated waste items including pipette tips and other laboratory equipment are segregated, collected in lined waste containers, properly labeled, and disposed of in accordance with hazardous waste regulations.

5.9 Laboratory staff will wipe down a representative area of specified fume hoods at least annually using pre-sterilized gauze and hexane. These wipes will be analyzed according to this method to ensure that good laboratory practices are observed at all times. The results of the wipes will be archived for reference.

5.10 Additionally, personnel responsible for handling, analyzing and disposing blood samples are required to undergo blood borne pathogen training and protocols as deemed necessary by the Safety Officer.

6. DEFINITIONS

6.1 Definitions are located in the glossary of the Pace Analytical Services Quality Manual..

7. SAMPLE COLLECTION, PRESERVATION AND HANDLING

7.1 Sample size - One liter of water samples containing less than or equal to 1% solids must be extracted. Aqueous or solid samples containing greater than 1% solids must be considered as solids and sufficient volume extracted to provide a dry weight of 10 grams (except for tissue samples and other samples noted to be reported on an as received basis). One gram aliquots are typically extracted for waste samples and samples suspected to contain high analyte levels. One hundred milligram aliquots are typically used for oil based samples. Sample amounts extracted for food samples containing fat are typically based on the lipid content of the sample. Non-fat foods and all feeds are based on the raw sample weight. The amounts typically needed for testing are provided in Attachment 4.

7.2 Sample preservation and handling

7.2.1 Collect samples in glass containers following conventional sampling practices.

7.2.2 Maintain samples at 2-6°C under darkness from the time of collection until extraction. If residual chlorine is present in aqueous samples from chlorinated sources, add 80 mg thiosulfate per one liter of water.

7.2.3 Tissue samples are stored frozen at -18°C to -20°C under darkness.

7.2.4 All sample extracts will be stored in the extract freezer at approximately -10°C until analysis.

7.3 Holding Times

Samples should be extracted within one year of sample collection and the extract analyzed within 40 days of extraction. Drinking water samples are extracted within 90 days of collection. Holding times between collection and extraction or extraction and analysis of up to one year do not invalidate the results.

7.4 Criteria for Acceptance/Rejection of Samples

7.4.1 Samples are to be rejected if information allowing determination of the applicable test and client information cannot be obtained.

7.4.2 If sample integrity has been compromised, the client must be contacted for instructions and permission to proceed with analysis. The client's comments and instructions are documented as part of routine laboratory policy.

8. EQUIPMENT AND SUPPLIES

8.1 Sample bottles - 1 Liter glass amber bottles for liquids which contain less than 1% solids; 500 mL wide mouth (or smaller) glass amber bottles for solids and sludges. All bottles are purchased pre-cleaned from the vendor. If glass amber bottles are not available, samples will be protected from the light. All bottles must have Teflon lined caps. Laboratory cleaned bottles may be substituted for pre-cleaned bottles. Bottles must be detergent washed, then solvent rinsed and baked at 450°C for one hour minimum.

8.2 8 dram open top glass vials

8.3 2 dram vials with Teflon-lined screw caps

8.4 Reacti vial - 2 mL borosilicate glass

8.5 1 Liter graduated cylinder

8.6 Balances - 0.01g and 0.0001g

8.7 Watering Explosion-proof Blender (or equivalent)

8.8 Stainless steel meat grinder - 3-5 mm hole

8.9 Soxhlet extraction apparatus

8.10 Thimble, 43 x 123 mm to fit Soxhlet

8.11 Heating mantle

8.12 Beakers, 50, 100, 250, 500, 2000 mL

8.13 Stainless steel spatulas

8.14 Assorted syringes and/or Eppendorf digital pipettes

8.15 Filtration apparatus

8.16 Separatory funnel, 250, 500 and 2000 mL with Teflon stop cocks

8.17 Glass chromatographic column - 300mm x 12mm

8.18 Glass wool pre-extracted with methylene chloride dried, and stored in a clean air tight plastic bag

8.19 Silanized glass wool pre-extracted with methylene chloride

8.20 Glass funnel, 125-250 mL

8.21 Glass fiber filter paper (Whatman GF/D or equivalent)

8.22 Drying column, 15-20 mm chromatograph column, also used for macro-silica and acid washing

8.23 Centrifuge apparatus - capable of rotating 500 mL centrifuge bottles or 15 mL tubes at 5000 rpm minimum

8.24 Disposable Pasteur pipettes

8.25 Disposable serological 10 mL pipettes

8.26 500 mL Kuderna Danish (KD) concentrator apparatus

8.27 Teflon boiling chips – pre-rinsed with methylene chloride

8.28 Water bath, ultrasonic

8.29 Desiccator

8.30 Nitrogen evaporation system with variable flow rate

8.31 Volumetric flasks - 5 mL, 10 mL, 15 mL, 20 mL, 25 mL and 100 mL

8.32 Teflon tape

8.33 High Resolution Mass Spectrometer (HRMS, AutoSpec or equivalent) system equipped with a gas chromatograph (GC Hewlett-Packard HP5890II, Agilent 6890 or equivalent)

8.34 DB-5 capillary column (60m, 0.25mm ID, 0.25µ)

8.35 DB-225 capillary column (30m, 0.25mm ID, 0.25µ)

8.36 Silica gel, 100-200 mesh. Pre-extracted in methylene chloride, air dried and stored in an oven.

8.37 Neutral alumina.

8.38 Celite – Supelco, reagent grade.

8.39 100-400 mesh carbon/Celite mixture.

8.40 Sodium hydroxide - reagent grade. Dissolve 40 g NaOH in 1L reagent water.

8.41 Sulfuric acid - reagent grade (sp gravity 1.84)

8.42 Sodium chloride - reagent grade. Prepare a 5% (w/v) solution in reagent water.

8.43 Anhydrous sodium sulfate - Rinse with methylene chloride (20 mL/g) and bake at 130°C for 1 hour minimum. Store baked anhydrous sodium sulfate in oven until use. Cool prior to use.

8.44 Potassium phosphate, Monobasic, Prepare a 0.5 M solution (68.05 g KH_2PO_4 in 1L reagent water).

8.45 Solvents - Acetone, toluene, hexane, benzene, nonane, methanol and methylene chloride. All solvents must be distilled in glass and pesticide grade.

8.46 White quartz sand 60/70 mesh

8.47 Reference matrices

8.47.1 Reagent water

8.47.2 Playground sand or similar material that is free of target compounds; may be prepared by extraction with methylene chloride and/or baking at 450°C for 4 hours.

8.47.3 Fish tissue, pre-tested to be analyte free or diluted corn oil.

8.47.4 Filter paper - Gelman type A or equivalent

8.47.5 Mineral oil

8.47.6 Sodium sulfate (for non-fat food and feed)

8.48 Individual standards prepared as described in the "Procedure" section of this SOP.

8.49 Supelco Visiprep vacuum SPE system

8.50 Silver nitrate

8.51 Extraction Sheets (See Attachment 1 for an example)

9. REAGENTS AND STANDARDS

9.1 Standards and working solutions are prepared from or compared to certified standards or purchased as certified premixed standards. All standards are valid for 1 year from date opened (or prepared). All standards are stored in glass bottles. The temperature at which solutions are stored is not critical and does not impact their validity. Solutions prepared in nonane or other more volatile solvents are typically stored at -18°C ± 2°C to minimize solvent loss during storage. References to storage at 4°C ± 2°C are made as default values. Standards may be re-verified by comparison to a valid native analyte solution. The final concentrations determined for any solution being re-verified must be within 20% of the expected concentrations for that solution.

9.2 The preparation of standards and working solutions is thoroughly documented in the appropriate standards notebook. Such documentation allows the traceability of each solution to a certified, purchased solution.

9.3 Preparation of Primary Stock Solution of Internal Standards (AI2-#)

Note: Identification AI2-# - # denotes the next sequential number assigned to AI2 standard from the Dioxin Standard Notebook.

Compound	If Concentration is µg/mL	Amt. Added (µL)	Final Conc. (µg/mL)
2,3,7,8-TCDD-$^{13}C_{12}$	50	200	2.08
2,3,7,8-TCDF-$^{13}C_{12}$	50	200	2.08
1,2,3,7,8-PeCDD-$^{13}C_{12}$	50	200	2.08
1,2,3,7,8-PeCDF-$^{13}C_{12}$	50	200	2.08
2,3,4,7,8-PeCDF-$^{13}C_{12}$	50	200	2.08
1,2,3,4,7,8-HxCDD-$^{13}C_{12}$	50	200	2.08
1,2,3,6,7,8-HxCDD-$^{13}C_{12}$	50	200	2.08
1,2,3,4,7,8-HxCDF-$^{13}C_{12}$	50	200	2.08
1,2,3,6,7,8-HxCDF-$^{13}C_{12}$	50	200	2.08
1,2,3,7,8,9-HxCDF-$^{13}C_{12}$	50	200	2.08
2,3,4,6,7,8-HxCDF-$^{13}C_{12}$	50	200	2.08
1,2,3,4,6,7,8-HpCDD-$^{13}C_{12}$	50	200	2.08
1,2,3,4,6,7,8-HpCDF-$^{13}C_{12}$	50	200	2.08
1,2,3,4,7,8,9-HpCDF-$^{13}C_{12}$	50	200	2.08
OCDD-$^{13}C_{12}$	10	2000	4.17

9.3.1 All compounds must be purchased in nonane (Cambridge or equivalent).

Note: Stock solutions containing labels PCDDs (DS-1000) and PCDFs (FS-1000) at concentrations of 1.0 ng/uL (2.0ng/uL for OCDD-$^{13}C_{12}$) are also available from Wellington Laboratories. Equal amounts of these solutions may be combined and diluted 10X total to prepare the B12 secondary solution described below.

9.3.2 Sonicate each vial for at least 1 minute after bringing to room temperature.

9.3.3 After sonication, pipette the compounds noted above into a pre-rinsed 2 dram vial and label. Identification must include: ID# and log #, $^{13}C_{12}$ primary stock solution of internal standard, preparation date, expiration date and preparer's initials.

9.3.4 Mark the meniscus now and each time a portion is removed.

9.3.5 Seal vial with Teflon tape and store in standards freezer at -18°C ± 2°C.

9.3.6 Record all standard preparation information in Dioxin Standard Notebook.

9.4 Preparation of Internal Standard Secondary Stock (BI2-#)

9.4.1 Sonicate the primary stock (AI2-#) for five minutes and allow it to reach room temperature before using.

9.4.2 Using an Eppendorf pipette, add 481 µL of primary stock (AI2-#) into a pre-rinsed 10 mL volumetric flask and bring to volume with tridecane to prepare the 100 ng/mL solution (200 ng/mL OCDD-$^{13}C_{12}$) solution. Alternately, combine the purchased Wellington stock solutions (1 mL each) and bring to 10 mL with tridecane to prepare the 100 ng/mL (200 ng/mL OCDD-$^{13}C_{12}$) solution.

9.4.3 Sonicate for five minutes and transfer into clean, labeled vials. Identification should include: ID#, (BI2-#), log #, vial numbers, preparation date and preparer's initials.

9.4.4 Note: Identification BI2-# - # denotes the next sequential number assigned to BI2 standard from the Dioxin Standard Notebook.

9.4.5 Seal with Teflon tape, mark the meniscus (now and after each use) and store in the standards refrigerator at 4°C ± 2°C.

9.4.6 A low level food spiking solution is prepared by diluting this solution 5x with tridecane. This solution is used for food samples in conjunction with a 10 uL final extract volume and the low level calibration solutions.

9.4.7 Record all standard preparation information in Dioxin Standard Notebook.

9.4.8 This solution may otherwise be purchased as a prepared mix from Wellington Laboratories or equivalent.

9.4.9 Prior to extraction, 20 µL of this solution (BI2-#) is added to each sample.

9.5 Preparation of Primary Native Standard Spiking Solution (AN1-#)

Compound	Concentration (µg/mL)
2,3,7,8-TCDF	0.40
2,3,7,8-TCDD	0.40
1,2,3,7,8-PeCDD	2.0
1,2,3,7,8-PeCDF	2.0
2,3,4,7,8-PeCDF	2.0
1,2,3,4,7,8-HxCDD	2.0
1,2,3,6,7,8-HxCDD	2.0
1,2,3,7,8,9-HxCDD	2.0
1,2,3,4,7,8-HxCDF	2.0
1,2,3,6,7,8-HxCDF	2.0
1,2,3,7,8,9-HxCDF	2.0
2,3,4,6,7,8-HxCDF	2.0
1,2,3,4,6,7,8-HpCDD	2.0
1,2,3,4,6,7,8-HpCDF	2.0
1,2,3,4,7,8,9-HpCDF	2.0
OCDF	4.0
OCDD	4.0

9.5.1 This is a purchased solution in nonane (Cambridge, TerraChem, or equivalent).

NOTE: One vendor source and standards prepared from the source are used for the ICAL. The other vendor source and standards diluted from it are used as an independent validation of all standards purchased.

9.5.2 Divide the standard into pre-rinsed 1 mL vials with ID# (AN1-#), log #, Primary Native Spiking Solution. Identification must also include: preparation date, expiration date and preparer's initials.

NOTE: Identification AN1-# - # denotes the next sequential number assigned to AN1 standard from the Dioxin Standard Notebook.

9.5.3 Mark the meniscus now and after each use.

9.5.4 Seal with Teflon tape and store in standards refrigerator at 4°C ± 2°C.

9.5.5 Record all standard preparation information in Dioxin Standard Notebook.

9.6 Preparation of Native Secondary Stock (BN1-#)

9.6.1 Sonicate primary standard (AN1-#) for five minutes and allow it to reach room temperature before using.

9.6.2 Add 1.0 mL of AN1-# to a pre-rinsed 10 mL volumetric flask and bring to volume with tridecane to prepare this 40 ng/mL solution.

9.6.3 Sonicate for five minutes after preparation and transfer into 2 dram vials. Identification must include: Native Spiking Solution ID# (BN1-#), log #, preparation date, expiration date and preparer's initials.

9.6.4 Note: Identification BN1-# - # denotes the next sequential number assigned to BN1 standard from the Dioxin Standard Notebook.

9.6.5 Seal vials with Teflon tape, mark the meniscus (now and after each use), and store in the standards refrigerator at 4°C ± 2°C until ready to use.

9.6.6 A low-level food spiking solution is prepared by diluting this solution 5x with tridecane. This solution is used for food samples in conjunction with a 10-uL-extract volume and this low-level calibration solution.

9.6.7 Record all standard preparation information in Dioxin Standard Notebook.

9.7 Preparation of Native Spiking Solution (CN1-#)

9.7.1 Sonicate secondary standard (BN1-#) for five minutes and allow it to reach room temperature before using. This standard is prepared for use each extraction batch and is added to each sample at the time of extraction.

9.7.2 Add 10 µL of BN1-# to a pre-rinsed 2 dram vial and 990 µL of acetone to prepare this 200 pg/mL solution. The diluted food native standard solution may be substituted for BN1-# for food samples.

9.7.3 Sonicate for five minutes.

9.7.4 Label 2 dram vial with ID# (CN1-#), log #, preparation date, expiration date and preparer's initials.

9.7.5 Record all standard preparation information in Dioxin Standard Notebook.

9.7.6 Prior to extraction, one mL of this solution is added to each laboratory and matrix spike sample.

9.8 Preparation of Cleanup Standard Primary Stock (ACl4-#)

Compound	If Concentration is µg/mL	Amount Added (µL)	Final Conc. (µg/mL)
$^{37}Cl_4$ 2,3,7,8-TCDD	50	200	1.0

9.8.1 The 50 µg/mL solution is purchased in nonane (Cambridge or equivalent). Sonicate the solution for five minutes and allow to reach room temperature and add 200 µL of the solution to a pre-rinsed 10 mL volumetric flask and bring to volume with tridecane to prepare this 1 ug/mL solution.

9.8.2 Transfer the standard to a 2 dram vial with color coded tape. Identification should include: $^{37}Cl_4$ Cleanup Standard: Primary Stock ID# (ACl4-#), log #, preparation date, expiration date and preparer's initials.

9.8.3 Note: Identification ACl4-# - # denotes the next sequential number assigned to ACl4 standard from the Dioxin Standard Notebook.

9.8.4 Seal vials with Teflon tape, mark the meniscus (now and after each use), and store in the standards refrigerator at 4°C ± 2°C.

9.8.5 Record all standards preparation information in Dioxin Standard Notebook.

9.9 Preparation of $^{37}Cl_4$ Cleanup Standard Secondary Stock (BCl4-#)

9.9.1 Sonicate the Cleanup Standard Primary Stock (CSPS) for five minutes and allow it to reach room temperature.

9.9.2 Using an Eppendorf pipette, add 1 mL of CSPS (ACl4-#) into a pre-rinsed 25 mL volumetric flask. Bring to volume with tridecane to prepare this 40 ng/mL solution.

9.9.3 Sonicate for five minutes, transfer to 2 dram vials. Identification should include: ID# (BCl4-#), log #, vial numbers, preparation date, expiration date and preparer's initials.

9.9.4 NOTE: Identification BCl4-# - # denotes the next sequential number assigned to BCl4 standard from the Dioxin Standard Notebook.

9.9.5 Seal vials with Teflon tape, mark the meniscus (now and after each use), and store in standards refrigerator at 4°C ± 2°C.

9.9.6 A low-level food spiking solution is prepared by diluting this solution 5x with tridecane. This solution is used for food samples in conjunction with a 10-uL final extract volume and the low-level calibration solutions.

9.9.7 Record all standard preparation information in Dioxin Standard Notebook.

9.10 Preparation of $^{37}Cl_4$ Cleanup Standard Spiking Solution (CCl4-#)

9.10.1 Sonicate the compound (BCl4-#) for five minutes and allow it to reach room temperature.

9.10.2 Using an Eppendorf pipette, add 2 mL of BCl4-# into a pre-rinsed 100 mL volumetric flask and bring to volume with tridecane to prepare this 800 pg/mL. The diluted food native standard solution may be substituted for BC14-# for food samples.

9.10.3 Sonicate for five minutes and transfer to pre-rinsed 6 dram vials. Identification must include ID# (CCl4-#), log #, vial number, preparation date, expiration date and preparer's initials.

9.10.4 NOTE: Identification CCl4-# - # denotes the next sequential number assigned to CCl4 standard from the Dioxin Standard Notebook.

9.10.5 Seal vials tightly with Teflon tape, mark the meniscus (now and after each use), and store in standards refrigerator at 4°C ± 2°C.

9.10.6 Record all standard preparation information in Dioxin Standard Notebook.

9.10.7 250 µL of this solution is added to each sample between extraction and enrichment.

9.11 Preparation of $^{13}C_{12}$ Recovery Standard Primary Stock (AR2-#)

Compound	If Concentration is µg/mL	Amt. Added (µL)	Final Conc. (µg/mL)
1,2,3,4-TCDD-$^{13}C_{12}$	50	250	2.5

1,2,3,7,8,9-HxCDD-$^{13}C_{12}$	50	250	2.5

9.11.1 The individual 50 µg/mL solutions are purchased in nonane (Cambridge or equivalent). Sonicate the solutions for five minutes and allow to reach room temperature.

9.11.2 Add the listed amount of each standard to a pre-rinsed 5 mL volumetric flask and bring to volume with tridecane.

9.11.3 Transfer the standard to a labeled 2 dram vials. Identification should include: ID# (AR2-#), log #, $^{13}C_{12}$ Recovery Standard, number of vials, preparation date, expiration date and preparer's initials.

9.11.4 NOTE: Identification AR2-# - # denotes the next sequential number assigned to AR2 standard from the Dioxin Standard Notebook.

9.11.5 Seal vials with Teflon tape, mark the meniscus (now and after each use), and store in the standards refrigerator at 4°C ± 2°C.

9.11.6 Record all standard preparation information in Dioxin Standard Notebook.

9.12 Preparation of $^{13}C_{12}$ Recovery Standard Spiking Solution (CR3-#)

9.12.1 Sonicate the $^{13}C_{12}$ Primary Recovery Standard for five minutes and allow it to reach room temperature before using.

9.12.2 Using an Eppendorf pipette, add 2 mL of AR2-# into a pre-rinsed 25 mL volumetric flask. Bring to volume with tridecane to prepare this 200 ng/mL solution.

9.12.3 Sonicate for five minutes, transfer to 2 dram vials labeled with tape. Identification must include: ID# (CR3-#), log #, vial numbers, preparation date, expiration date and preparer's initials.

9.12.4 NOTE: Identification CR3-# - # denotes the next sequential number assigned to CR3 standard from the Dioxin Standard Notebook.

9.12.5 Seal vials with Teflon tape, mark the meniscus (now and after each use), and store in standards refrigerator at 4°C ± 2°C.

9.12.6 Record all standard preparation information in Dioxin Standard Notebook.

9.12.7 10 µL of this solution is added to each sample during the final concentration of the extract.

9.12.8 A low-level food spiking solution is prepared by diluting this solution 5x with tridecane. This solution is used for food samples in conjunction with a 10 uL final extract volume and the low level calibration solutions.

9.12.9 This solution may otherwise be purchased as a prepared mix from Wellington Laboratories or equivalent.

9.13 Preparation of Initial Calibration Solutions

9.13.1 Mix 256 µL of AN1-# with 100 µL of ACl4-#. Label as ICAL Native Mix. This solution contains 281 pg/µL of the native and $^{37}Cl_4$ labeled isomers.

9.13.2 Prepare a 1:50 dilution (20 µL to 1 mL) of the ICAL Native Mix and label as Diluted ICAL Native Mix. This solution contains the native and $^{37}Cl_4$ labeled isomers at 5.6 pg/µL.

9.13.3 Mix 150 µL of AI2-# with 125 µL of AR2-#. Label as ICAL Internal Mix. This solution contains the internal and recovery standards at 1.13 ng/µL.

9.13.4 Prepare the five calibration solutions as follows:

CS-1	22.2 µL	Diluted ICAL Native
fv = 250 µL	22 µL	ICAL Internal Mix
	206 µL	Tridecane
CS-2	89 µL	Diluted ICAL Native Mix
fv = 250 µL	22 µL	ICAL Internal Mix
	139 µL	Tridecane
CS-3	35.6 µL	ICAL Native Mix
fv = 1 mL	88 µL	ICAL Internal Mix
	876 µL	Tridecane
CS-4	35.6 µL	ICAL Native Mix
fv = 250 µL	22 µL	ICAL Internal Mix
	192 µL	Tridecane
CS-5	178 µL	ICAL Native Mix
fv = 250 µL	22 µL	ICAL Internal Mix
	50 µL	Tridecane

NOTE: These solutions contain the standards at the concentration levels described on the Table found on the next page. Split CS-3 aliquot into three separate vials. Archive two vials in the standards refrigerator.

PCDD/PCDF	CS1 (ng/mL)	CS2 (ng/mL)	CS3 (ng/mL)	CS4 (ng/mL)	CS5 (ng/mL)
2,3,7,8-TCDD	0.5	2	10	40	200
2,3,7,8-TCDF	0.5	2	10	40	200
1,2,3,7,8-PeCDD	2.5	10	50	200	1000
1,2,3,7,8-PeCDF	2.5	10	50	200	1000
2,3,4,7,8-PeCDF	2.5	10	50	200	1000
1,2,3,4,7,8-HxCDD	2.5	10	50	200	1000
1,2,3,6,7,8-HxCDD	2.5	10	50	200	1000
1,2,3,7,8,9-HxCDD	2.5	10	50	200	1000
1,2,3,4,7,8-HxCDF	2.5	10	50	200	1000
1,2,3,6,7,8-HxCDF	2.5	10	50	200	1000
1,2,3,7,8,9-HxCDF	2.5	10	50	200	1000
2,3,4,7,8,9-HxCDF	2.5	10	50	200	1000
1,2,3,4,6,7,8-HpCDD	2.5	10	50	200	1000
1,2,3,4,6,7,8-HpCDF	2.5	10	50	200	1000
1,2,3,4,7,8,9-HpCDF	2.5	10	50	200	1000
OCDD	5.0	20	100	400	2000
OCDF	5.0	20	100	400	2000
$^{13}C_{12}$-2,3,7,8-TCDD	100	100	100	100	100
$^{13}C_{12}$-2,3,7,8-TCDF	100	100	100	100	100
$^{13}C_{12}$-1,2,3,7,8-PeCDD	100	100	100	100	100
$^{13}C_{12}$-1,2,3,7,8-PeCDF	100	100	100	100	100
$^{13}C_{12}$-2,3,4,7,8-PeCDF	100	100	100	100	100

$^{13}C_{12}$-1,2,3,4,7,8-HxCDD	100	100	100	100	100
$^{13}C_{12}$-1,2,3,6,7,8-HxCDD	100	100	100	100	100
$^{13}C_{12}$-1,2,3,4,7,8-HxCDF	100	100	100	100	100
$^{13}C_{12}$-1,2,3,6,7,8-HxCDF	100	100	100	100	100
$^{13}C_{12}$-1,2,3,7,8,9-HxCDF	100	100	100	100	100
$^{13}C_{12}$-1,2,3,4,6,7,8-HpCDD	100	100	100	100	100
$^{13}C_{12}$-1,2,3,4,6,7,8-HpCDF	100	100	100	100	100
$^{13}C_{12}$-1,2,3,4,7,8,9-HpCDF	100	100	100	100	100
$^{13}C_{12}$-OCDD	200	200	200	200	200
$^{37}Cl_4$-2,3,7,8-TCDD	0.5	2	10	40	200
$^{13}C_{12}$-1,2,3,4-TCDD	100	100	100	100	100
$^{13}C_{12}$-1,2,3,7,8,9-HxCDD	100	100	100	100	100

9.13.5 The calibration solutions may otherwise be purchased as a prepared mix from Wellington Laboratories or equivalent. The CS-3 is also available with the window defining and column resolution isomers in the same solution (See Quality Control Section 12).

9.14 Lower calibration and spiking levels may be used for food and feed analyses. The initial calibration standard sequence is prepared by diluting each of the 5 calibration solutions 2.5x with nonane. Similarly, the internal standard, recovery standard, clean-up and native spiking solutions are diluted 5x with tridecane, as described above. (Since extracts are taken to 10 uL final volume rather than 20 uL, the amount of standard material added is reduced 5x to provide the same concentration in the extract as the 2.5x dilution of the calibration standards.) The ICAL solution concentrations are then 40% of the concentrations listed in the above table.

9.15 In addition to the 5 point calibration curve, two low level calibration standards may be analyzed to bring the calibration range down to a lower level. The lowest standard is prepared to contain the tetra and penta chlorinated isomers at 0.1 pg/uL, hexa and hepta chlorinated isomers at 0.2 pg/uL and octa chlorinated isomers at 0.5 pg/uL. The second solution contains the native isomers at double those levels. In both cases, the labeled compounds are present at 40 pg/uL, except labeled OCDD that is present at 80 pg/uL and the clean-up standard that is present at 4 pg/uL.

10. CALIBRATION

10.1 Initial Calibration

10.1.1 Prior to analyzing samples, the instrument is calibrated by analyzing a series of five standard solutions, one of which is at or below the reporting limit.. This initial calibration (ICAL) is performed when the continuing calibration solution is replaced by one from a different lot or when the continuing calibration does not pass the method specified criteria (levels outside limits are flagged in AutoPro). With the exception of the low-level food standards that require 3:1 signal to noise, the PCDD/PCDF signals must demonstrate an intensity of at least 10:1 signal to noise. All ion ratios must be within 15% of the theoretical value (values outside limits are flagged in AutoPro).

10.1.2 Additional standards are analyzed to demonstrate chromatographic resolution and stability of the ICAL. These consist of the continuing calibration solution (VER) described above, and a solution containing the isomers required to demonstrate the chromatographic resolution of the 2,3,7,8-TCDD (25% valley) and the presence of the first and last eluting isomers of each congener class (Wellington 5TDWD or equivalent). A solution (Wellington EPA1613-CS3WT) is available and incorporates all of the above components into a single solution.

10.2 Calibration Standards Acceptance Criteria

10.2.1 Standards must meet the following requirements before analyzing samples.

10.2.1.1 Ratios must be within 15% of theoretical values. See Attachment 6.

10.2.1.2 Percent relative standard deviation for each isomer in the initial calibration must be <35%.

10.2.1.2.1 Calculate response factors (RF) using the equation below

Equation 1.

$$Rf = \frac{Aa \times Qs}{As \times Qa}$$

where:

Rf = Response factor
Aa = Sum of integrated areas for analyte
Qs = Quantity of labeled standard
As = Sum of integrated areas for labeled standard
Qa = Quantity of analyte

10.2.1.2.2 Using the RFs from the initial calibration, calculate the percent relative standard deviation (%RSD) for each congener using Equation 2.

Equation 2

$$\%RSD = \frac{SD}{\overline{X}} x100$$

where:

RSD = Relative standard deviation.
SD = Standard deviation of average RFs for a compound
$\overline{X}$ = Mean of 5 initial RFs for a congener.

The standard deviation is calculated following Equation 3.

Equation 3

$$SD = \sqrt{\frac{\sum_{i=1}^{n}\left(RF_1 - \overline{RF}\right)^2}{n-1}}$$

where:

$\mathbf{RF_1}$	=	Each individual response factor
$\overline{RF}$	=	Mean of the Response Factor
n	=	The total number of values

10.2.1.3 Response factors for continuing calibration standards must be within the limits in Attachment 3.

10.2.1.4 Percent valley between 2,3,7,8-TCDD and any other peak in the column performance check must be <25%, relative to the height of 2,3,7,8-TCDD.

10.2.1.5 All peaks for a given PCDD/PCDF level of chlorination must elute within the time window(s) set up for that particular class.

10.2.1.6 Native compounds must elute within ±2 seconds of the expected elution time relative to the elution times of the corresponding internal standards.

10.2.2 See 12.1.5 for corrective actions in the event that the above criteria cannot be met.

11 PROCEDURE

11.1 Glassware Cleaning

11.1.1 Separate glassware (macro silica and acid columns, Soxhlet apparatus) must be reserved for tissue and food samples since even very low levels of contamination may cause problems in providing usable results. Care must also be taken that this glassware is not contaminated by cleaning/soaking with glassware/solvents/brushes/etc. that have been exposed to elevated analyte levels.

11.1.2 Prior to use, glassware should be cleaned using the following steps:

11.1.2.1 Wash with soap and water (water rinse).

11.1.2.2 Soak in Chemsolve (or equivalent) for one hour (water rinse).

NOTE: Chemsolve should be changed on a weekly basis at minimum, or after washing of samples found to contain vary high analyte levels.

11.1.2.3 Rinse with tap water.

11.1.2.4 Rinse with 1:1 nitric acid and then a DI rinse

11.1.2.5 Rinse with methanol and then Acetone

11.1.2.6 Air Dry.

11.1.2.7 Prior to use, rinse with hexane and the solvent to be used for extraction just prior to glassware use.

NOTE: The brushes must be replaced on a weekly basis at minimum, or after glassware used for samples containing very high analyte levels, in order to minimize the chances for contamination during the cleaning process.

11.1.3 Occasionally, a more vigorous cleaning is required. If so, soak for several minutes to several hours in Chromerge after completing steps 12.1.2.1 through 12.1.2.4. Repeat steps 12.1.2.1 through 12.1.2.6 after the Chromerge step.

11.1.4 Soxhlet\Dean Stark Glassware Pre-extraction

11.1.4.1 Place 30-40 mL of toluene in the clean Soxhlet extractor and 200-250 mL in the flask along with approximately 5-8 Teflon boiling chips.

11.1.4.2 Pre-extract the glassware by heating the flask until the toluene is boiling. When properly adjusted, 1-2 drops of toluene per second will fall from the condenser tip into the receiver. Extract the apparatus for 3-4 hours minimum (typically overnight).

11.1.4.3 After pre-extraction, disassemble the apparatus. Refill the apparatus with 200-250 mLs fresh extraction solvent.

11.2 Preparation Prior to Sample Extraction

NOTE: Drinking water samples may be prepared using the current version of SOP MN-H-003.

11.2.1 Aqueous samples containing one percent solids (or less) are extracted in separatory funnels.

11.2.2 In samples expected or known to contain high levels of the PCDDs and /or PCDFs, the smallest sample size representative of the entire sample should be used, and the extract must be diluted, if necessary.

11.2.3 Determination of Percent Solids

11.2.3.1 Weigh 5-10 g of sample to three significant figures into a tarred weighing vessel. Fatty food samples are reported based on the lipid weight of the sample. Non-fatty food and all feed samples are reported based on the total weight of the sample extracted.

11.2.3.2 Dry overnight (minimum of 12 hours) at 110 ± 5°C and cool in a desiccator. Reweigh.

11.2.3.3

$$\% \text{ Solids} = \frac{\text{Wt dried sample (g)} \times 100}{\text{Wt wet sample (g)}}$$

11.2.3.4 Data are recorded electronically and printed out as needed.

11.2.4 Percent Lipids Determination – 1613B requires lipid content determination for tissue samples. Please see SOP MN-H-004 for this procedure.

11.2.5 Grinding, Homogenization, and Blending

11.2.5.1 Prior to spiking, samples with particle size greater than 1 mm are subjected to grinding, homogenization, or blending. The method of reducing particle size to less than 1 mm is matrix dependent.

11.2.5.2 In general, hard particles can be reduced by grinding with a mortar and pestle. Softer particles can be reduced by grinding in a Wiley mill or meat grinder, by homogenization, or by blending.

11.2.5.3 The grinding, homogenization, or blending procedures must be carried out in a glove box or fume hood to prevent particles from contaminating the work environment.

11.2.5.4 Tissue samples, certain papers and pulps, slurries and amorphous solids can be ground in a Wiley mill or heavy duty meat grinder. In some cases, reducing the temperature of the sample to freezing or to dry ice or liquid nitrogen temperatures can aid in the grinding process.

11.2.6 Quality Control Samples

11.2.6.1 For each batch (up to 10 samples) to be extracted in the same eight-hour shift, place two aliquots of the reference matrix into clean apparatus (See extraction sections for reference matrix type). One reference matrix will serve as the method blank and the other will be a laboratory control sample (LCS) Include one additional aliquot of reference matrix if larger batches (up to 20) will be analyzed.

11.2.6.2 Method Blank: Spike 1 mL of the labeled compound solution (Cl2-#) into one reference matrix.

Note: When setting up method blanks, the glassware used must be varied randomly amongst the sets used for sample extraction.

11.2.6.3 LCS/LCSD: Spike 1 mL of labeled compound solution (Cl2-#) and 1 mL of the native spiking solution (CN1-#) into the remaining reference matrix(ces).

11.2.6.4 If matrix spikes/ matrix spike duplicates/ sample duplicates are prepared, then spike as described in 12.2.5.3 except a sample will be used instead of blank matrix.

11.3 Aqueous Samples (<1% Solids)

11.3.1 Preparation

11.3.1.1 Mark the original level of the sample on the sample bottle for later determination of sample volume. Weigh the sample in the bottle to ± 1 g on a top loading balance. Record this weight.

11.3.1.2 Spike 1 mL of the labeled compound solution (CI2-#) into the bottle. Cap the bottle and mix by carefully shaking for 2 minutes.

11.3.1.3 For each sample or sample set (up to 10) to be extracted during the same eight hour shift, place two 1.0 L aliquots of reagent water in clean 1 L Erlenmeyer flasks. If larger batches (up to 20) are to be extracted, include one additional aliquot of reagent water. Spike as described in 11.2.6.

11.3.1.4 Assemble a Buchner funnel and a vacuum adapter on top of a clean 1 L Erlenmeyer flask. Apply a vacuum to the flask and pour the entire contents of the sample bottle through a glass fiber filter in the Buchner funnel, swirling the sample remaining in the bottle to suspend any particulate. Rinse the bottles with three 60 mL portions of methylene chloride, pouring each portion through the filter. Samples containing no visible particulate need not be filtered; instead, quantitatively transfer the samples to separatory funnels. Treat the QC samples in the same manner as the field samples.

11.3.1.5 If filtered, rinse any particulate off the sides of the Buchner funnel with small quantities of methylene chloride.

11.3.1.6 Weigh the empty sample bottle on a top loading balance to ± 1 g. Determine the weight of the sample by difference and note the weight on the extraction preparation sheet. This value is used in the calculation of analyte concentrations.

11.3.1.7 After extraction, fill the empty bottle to the mark with tap water, determine the volume in a 1 L graduated cylinder and note the volume on the Dioxin Extraction Worksheet (see Attachment 1).

11.3.1.8 Save and extract the filter, particulate and filtrates as described below.

11.3.2 Sample Extraction

11.3.2.1 Filtrates (liquid portion)

11.3.2.1.1 Quantitatively transfer the filtrate into a separatory funnel with three 35 mL rinses of MeCl2.

11.3.2.1.2 Extract by shaking the separatory funnel, venting any back pressure.

11.3.2.1.3 If an emulsion layer forms, allow it to dissipate, or use mechanical or chemical (salt, heat ,etc.) means to break the emulsion. Once the emulsion is broken, continue the extraction.

11.3.2.1.4 After the extraction allow the layers to separate.

11.3.2.1.5 Remove the methylene chloride layer. Repeat the extraction two times with fresh aliquots of methylene chloride, combining the three solvent portions.

11.3.2.1.6 Transfer the methylene chloride through a 10 cm plug of sodium sulfate and glass wool to a pre-extracted Kuderna Danish concentrator. Set aside for addition of filter and particulate extract (if applicable) or concentrate to approximately 1 mL using KD and N-evap apparatus and proceed with sample cleanup (11.16).

11.3.2.2Filters and Filter Particulate (if applicable)

11.3.2.2.1 Mix the filter and particulate with anhydrous sodium sulfate and load into the thimble, add a fresh charge of toluene (300 mL) to the Soxhlet apparatus. Alternatively, the extraction can be completed by substituting sand for the sodium sulfate and fitting the Soxhlet with Dean-Stark apparatus.

11.3.2.2.2 Extract the sample:

11.3.2.2.2.1 If necessary, adjust the reflux rate to match the rate of percolation through the sand and silica beds until water removal lessens the restriction of toluene flow. Check the apparatus for foaming frequently during the first two hours of extraction. If foaming occurs, reduce the reflux rate until foaming subsides.

11.3.2.2.2.2 If applicable, drain the water from the receiver at 1-2 hours and 8-9 hours, or sooner if the receiver fills with water. Reflux the sample for a minimum of 16 hours. Cool and disassemble the apparatus.

11.3.2.2.3 Remove the distilling flask and rinse the receiver with small portions of toluene and add to the flask.

11.3.2.2.4 Cool and place a pre-rinsed Snyder column on the 500 mL round bottom flask for concentration. The extract can otherwise be quantitatively transferred to a K-D flask and concentrated on a steam bath.

11.3.2.2.5 Concentrate to approximately 10 mL. Remove and allow to cool for 5 minutes.

11.3.2.2.6 Rinse Snyder column down into the flask with three 2 mL portions of hexane.

11.3.2.2.7 If, based on the appearance (cloudy or emulsive) or color (not clear) of the extract, the extract requires acid washes (11.15), combine with the filtrate in a 500 mL separatory funnel or a 40 mL vial. Rinse the flask and KD with hexane (3 x 30 mL) and add to the separatory funnel. Proceed to sample cleanup (11.15).

11.3.2.2.8 If acid washes are not required, transfer the extract through a drying column containing a 10 cm plug of glass wool and sodium sulfate, and combine with the filtrate portion of the extract (if applicable). Rinse the flask with hexane (3 x 30 mL) and add to the drying column. Concentrate to 1 mL using KD and N-evap apparatus and proceed with sample cleanup (11.15).

11.4 Aqueous Samples containing >1% solids

11.4.1 Preparation

11.4.1.1 Weigh a well mixed aliquot of each sample sufficient to provide 10 g of dry solids (based on the solids determination described above) into a clean beaker, pre-extracted thimble or glass jar. In certain cases, i.e., sludge or waste matrices, this amount may be modified to a smaller aliquot to provide more workable extracts.

11.4.1.2 Spike with 1 mL of the labeled compound solution (CI2-#).

11.4.1.3 For each sample or sample set (up to 10) to be extracted in the same eight-hour shift, weigh two 10g aliquots of clean sand into clean beakers or glass jars. If larger batches (up to 20) are to be extracted, include an additional aliquot of the reference matrix material. Spike as described in 11.2.6.

11.4.1.4 If sample flows easily, assemble a Buchner funnel and a vacuum adapter on top of a clean 1 L Erlenmeyer flask. Apply a vacuum to the flask and pour the aliquot through a glass fiber filter in the Buchner funnel, swirling the sample remaining in the bottle to suspend any particulate. Rinse the bottle 3 times with 60 mL of reagent water pouring each aliquot through the filter.

11.4.1.5 The sample may otherwise be separated using a centrifuge, and the liquid fraction decanted. With this procedure, the correct sample amount is first transferred into a different container for centrifuging. After centrifuging, the entire solid portion is mixed with sodium sulfate and transferred into a Soxhlet extraction thimble, as described for solid sample preparation.

11.4.1.6 If filtered or centrifuged, rinse any particulate off the sides of the Buchner funnel or secondary sample container with small quantities of methylene chloride.

11.4.1.7 Save and extract the filtrates as described below. (If greater than 100 mL of water is present, extract it in a separatory funnel and combine with the solid extract, otherwise discard aqueous phase.)

11.4.2 Sample Extraction (Filtrate)

11.4.2.1 Quantitatively transfer the filtrate into a separatory funnel with three 35 mL rinses of MeCl2.

11.4.2.2 Extract by shaking the separatory funnel, venting any back pressure.

11.4.2.3 If an emulsion layer forms, allow it to dissipate, or use mechanical or chemical (salt, heat ,etc.) means to break the emulsion. Once the emulsion is broken, continue the extraction.

11.4.2.4 After the extraction allow the layers to separate.

11.4.2.5 Remove the methylene chloride layer. Repeat the extraction two times with fresh aliquots of methylene chloride, combining the three solvent portions.

11.4.2.6 Transfer the methylene chloride through a 10 cm plug of sodium sulfate and glass wool to a pre-extracted Kuderna Danish concentrator. Set aside for addition of filter and particulate extract (if applicable) or concentrate to approximately 1 mL using KD and N-evap apparatus and proceed with sample cleanup.

11.4.3 Sample Extraction (Filters and Filter Particulate)

11.4.3.1 Mix the filter and particulate with anhydrous sodium sulfate and load into the thimble, add a fresh charge of toluene (300 mL) to the Soxhlet apparatus. Alternatively, the extraction can be completed by substituting sand for the sodium sulfate and fitting the Soxhlet with Dean-Stark apparatus.

11.4.3.2 Extract the sample:

11.4.3.2.1 If necessary, adjust the reflux rate to match the rate of percolation through the sand and silica beds until water removal lessens the restriction of toluene flow. Check the apparatus for foaming frequently during the first two hours of extraction. If foaming occurs, reduce the reflux rate until foaming subsides.

11.4.3.2.2 If applicable, drain the water from the receiver at 1-2 hours and 8-9 hours, or sooner if the receiver fills with water. Reflux the sample for a minimum of 16 hours. Cool and disassemble the apparatus.

11.4.3.3 Remove the distilling flask and rinse the receiver with small portions of toluene and add to the flask.

11.4.3.4 Cool and place a pre-rinsed Snyder column on the 500 mL round bottom flask for concentration. The extract can otherwise be quantitatively transferred to a K-D flask and concentrated on a steam bath.

11.4.3.5 Concentrate to approximately 10 mL. Remove and allow to cool for 5 minutes.

11.4.3.6 Rinse Snyder column down into the flask with three 2 mL portions of hexane.

11.4.3.7 If, based on the appearance (cloudy or emulsive) or color (not clear) of the extract, the extract requires acid washes (11.15), combine with the filtrate in a 500 mL separatory funnel or a 40 mL vial. Rinse the flask and KD with hexane (3 x 30 mL) and add to the separatory funnel. Proceed to sample cleanup (11.15).

11.4.3.8 If acid washes are not required, transfer the extract through a drying column containing a 10 cm plug of glass wool and sodium sulfate, and combine with the filtrate portion of the extract (if applicable). Rinse the flask with hexane (3 x 30 mL) and add to the drying column. Concentrate to 1 mL using KD and N-evap apparatus and proceed with sample cleanup (11.15).

11.5 Multiphase Samples

11.5.1 Preparation

11.5.1.1 Spike an appropriately sized aliquot of the sample with 1 mL of the labeled compound solution (CI2-#).

11.5.1.2 For each sample or sample set (up to 10) to be extracted in the same eight-hour shift, weigh two 10g aliquots of clean sand into clean beakers or glass jars. If larger batches (up to 20) are to be extracted, include an additional aliquot of reference matrix material. Spike as described in 11.2.6.

11.5.1.3 Pressure filter the sample, blank and laboratory control spike aliquots through Whatman GF/D glass fiber filter paper. If necessary, centrifuge these aliquots for 30 minutes prior to filtration.

11.5.1.4 Discard aqueous phase. (If aqueous phase is 100 mL or greater, a separatory funnel extraction is performed and the extract is combined with the extract form the solid portion.) Remove any non-aqueous liquid (if present) and reserve for recombination with the extract of the solid phase. Prepare the filter papers of the sample and QC aliquots for particle size reduction and blending.

11.5.1.5 Mix the filter and particulate with anhydrous sodium sulfate and load into the thimble, add a fresh charge of toluene (300 mL) to the Soxhlet apparatus. Alternatively, the extraction can be completed by substituting sand for the sodium sulfate and fitting the Soxhlet with Dean-Stark apparatus.

11.5.1.6 Add any non-aqueous liquid from the multiphase samples to the Soxhlet thimble and cover the thimble with glass wool.

11.5.2 Extract the sample:

11.5.2.1 If necessary, adjust the reflux rate to match the rate of percolation through the sand and silica beds until water removal lessens the restriction of toluene flow. Check the apparatus for foaming frequently during the first two hours of extraction. If foaming occurs, reduce the reflux rate until foaming subsides.

11.5.2.2 If applicable, drain the water from the receiver at 1-2 hours and 8-9 hours, or sooner if the receiver fills with water. Reflux the sample for a minimum of 16 hours. Cool and disassemble the apparatus.

11.5.2.3 Remove the distilling flask and rinse the receiver with small portions of toluene and add to the flask.

11.5.2.4 Cool and place a pre-rinsed Snyder column on the 500 mL round bottom flask for concentration. The extract can otherwise be quantitatively transferred to a K-D flask and concentrated on a steam bath.

11.5.2.5 Concentrate to approximately 10 mL. Remove and allow to cool for 5 minutes.

11.5.2.6 Rinse Snyder column down into the flask with three 2 mL portions of hexane.

11.5.2.7 If, based on the appearance (cloudy or emulsive) or color (not clear) of the extract, the extract requires acid washes (11.15), combine with the filtrate in a 500 mL separatory funnel or a 40 mL vial. Rinse the flask and KD with hexane (3 x 30 mL) and add to the separatory funnel. Proceed to sample cleanup (11.15).

11.5.2.8 If acid washes are not required, transfer the extract through a drying column containing a 10 cm plug of glass wool and sodium sulfate, and combine with the filtrate portion of the extract (if applicable). Rinse the flask with hexane (3 x 30 mL) and add to the drying column. Concentrate to 1 mL using KD and N-evap apparatus and proceed with sample cleanup (11.15).

11.6 Soil/Solid Samples by Soxhlet

11.6.1 Preparation

11.6.1.1 Weigh a 10-gram aliquot (dry weight) of the homogenized sample, and place into a Soxhlet thimble. If the sample material is wet, dry it by mixing with extracted anhydrous sodium sulfate before adding to the Soxhlet thimble. If the sample will be extracted using Soxhlet Dean-Stark apparatus (with toluene), no sodium sulfate should be added.

11.6.1.2 Spike the sample aliquot with the labeled spiking solution (CI2-#).

11.6.1.3 For each sample or sample set (up to 10) to be extracted in the same eight-hour shift, weigh two 10 g aliquots of clean sand and place each aliquot into a Soxhlet thimble. If larger batches (up to 20) are to be extracted, include an additional aliquot of reference matrix material. (Sand is extracted prior to use.). Spike as described in 11.2.6.

11.6.2 Sample Extraction

11.6.2.1 Place the prepared sample in the thimble into the Soxhlet extractor. The Dean-Stark attachments maybe utilized in place of the sodium sulfate drying step.

11.6.2.2 Add 300 mL of toluene and reflux for a minimum of 16 hours. Cycle at a rate of three cycles per hour. If applicable, drain the water from the receiver as needed.

11.6.2.3 Cool and place a pre-rinsed Snyder column on the 500 mL round bottom flask for concentration. The extract can otherwise be quantitatively transferred to a K-D flask and concentrated on a steam bath.

11.6.2.4 Concentrate to approximately 10 mL. Remove and allow to cool for 5 minutes.

11.6.2.5 Rinse Snyder column down into the flask with three 2 mL portions of hexane.

11.6.2.6 If, based on the appearance (cloudy or emulsive) or color (not clear) of the extract, the extract requires acid washes (11.15), transfer the extract to a 500 mL separatory funnel or a 40 mL vial. Rinse the flask and KD with hexane (3 x 30 mL) and add to the separatory funnel. Proceed to sample cleanup (11.16).

11.6.2.7 If acid washes are not required, transfer the extract through a drying column containing a 10 cm plug of glass wool and sodium sulfate, and combine with the filtrate portion of the extract (if applicable). Rinse the flask with hexane (3 x 30 mL) and add to the drying column. Concentrate to 1 mL using KD and N-evap apparatus and proceed with sample cleanup (11.16).

11.7 Preparation and Extraction of Still Bottom Samples

11.7.1 Transfer a 1.0 g ±0.05 g aliquot of the homogenized sample to a clean 50 mL beaker and spike the sample with 1 mL of the labeled spiking solution (CI2-#).

11.7.2 For each sample or sample set (up to 10) to be extracted in the same shift, weigh two 1 gram aliquots of clean sand into clean 50 mL beakers. If larger batches (up to 20) are to be extracted, include an additional aliquot of the reference material. (Sand is extracted prior to use.). Spike as described in 11.2.6.

11.7.3 Add 10 mL of toluene to the beaker and mix well.

11.7.4 Filter the solution through a pre-rinsed glass fiber filter into a 50 mL round bottom flask. Rinse the beaker and filter with three 10 mL aliquots of toluene.

11.7.5 Concentrate the extracts and rinsates to NEAR dryness using a K-D flask, or under a gentle stream of nitrogen.

11.8 Preparation and Extraction of Fly Ash Samples

11.8.1 Weigh a 10g aliquot of the homogenized sample and an equivalent amount of anhydrous sodium sulfate into a clean beaker. Mix well. NOTE: If high levels are expected, a smaller (1 gram) aliquot may be extracted. If the sample will be extracted using Soxhlet Dean-Stark apparatus (with toluene), no sodium sulfate should be added.

11.8.2 Spike the sample aliquot with 1 mL of the labeled compound solution (CI2-#).

11.8.3 For each sample or sample set (up to 10) to be extracted in the same eight-hour shift, weigh two 10g aliquots of the clean sand into clean beakers or glass jars. If larger batches (up to 20) are to be extracted, include an additional aliquot of the reference matrix material. Spike as described in 11.2.6.

11.8.4 Place each prepared fly ash sample into a thimble and place in the Soxhlet apparatus.

11.8.5 Add 300 mL toluene and extract for 16-18 hours, maintaining three cycles per hour.

11.8.6 Cool and place a pre-rinsed Snyder column on the 500 mL round bottom flask for concentration. The extract can otherwise be quantitatively transferred to a K-D flask and concentrated on a steam bath.

11.8.7 Concentrate to approximately 10 mL. Remove and allow to cool for 5 minutes.

11.8.8 Rinse Snyder column down into the flask with three 2 mL portions of hexane.

11.8.9 If, based on the appearance (cloudy or emulsive) or color (not clear) of the extract, the extract requires acid washes (11.15), transfer the extract to a 500 mL separatory funnel or a 40 mL vial. Rinse the flask and KD with hexane (3 x 30 mL) and add to the separatory funnel. Proceed to sample cleanup (11.15).

11.8.10 If acid washes are not required, transfer the extract through a drying column containing a 10 cm plug of glass wool and sodium sulfate, and combine with the filtrate portion of the extract (if applicable). Rinse the flask with hexane (3 x 30 mL) and add to the drying column. Concentrate to 1 mL using KD and N-evap apparatus and proceed with sample cleanup (11.15).

11.9 Milk and Milk Product Samples

11.9.1 Accurately measure a 100 mL aliquot of milk and transfer to a 2 liter separatory funnel.

11.9.2 Spike the sample aliquot with 1 mL of the labeled compound solution (CI2-#).

11.9.3 For each sample or sample set (up to 10) to be extracted in the same eight-hour shift, measure two 100 mL aliquots of de-ionized water into clean separatory funnels. If larger batches (up to 20) are to be extracted, include an additional aliquot of the reference matrix material. Spike as described in 11.2.6.

11.9.4 Add 300 mL of 1.5M potassium oxalate solution and 600 mL of de-ionized water to each sample in the separatory funnel.

11.9.5 Gently shake the separatory funnel for 8-10 minutes.

11.9.6 Add 150 mL of 1:1:1 ethanol/ether/hexane to the sample and shake gently for 3-4 minutes.

11.9.7 Allow the layers to separate 15-20 minutes.

11.9.8 Collect the milk (bottom layer) and emulsion layers in a clean 2 L beaker. (The emulsion layer can be reduced by adding small volumes (10-30 mL) of the 1:1:1 solvent mixture to the separatory funnel after separation of the layers.)

11.9.9 Transfer the clear organic layer directly to a Kuderna-Danish concentrator and set aside.

11.9.10 Transfer the milk and emulsion back to the separatory funnel and repeat the extraction two more times. Combine the organic layers to the K-D flask and save the emulsion layer in a 500 mL separatory funnel.

11.9.11 After the final extraction, rinse the 2 L separatory funnel with 60 mL of the 1:1:1 solvent mixture and add to the K-D flask.

11.9.12 Concentrate the extract to 2 mL and allow to cool.

11.9.13 Quantitatively transfer the extract into the separatory funnel containing the emulsion and add 80 mL hexane.

11.9.14 Perform the acid washes and cleanup (11.15) as described. For milk samples, acid cleanup is not considered optional.

11.9.15 NOTE: The first acid wash should not be shaken. Slowly pour the first 50 mL of sulfuric acid into the separatory funnel and allow to separate for 15 minutes. Drain the acid and perform the remaining washes in the normal manner.

11.10 Preparation of Tissue Samples (Environmental)

11.10.1 If the sample is supplied as whole fish or fillets, grind the sample using a meat grinder or blender.

11.10.2 Weigh a 10 gram aliquot of the homogenized sample into a clean beaker. Mix in enough extracted anhydrous sodium sulfate to dry the sample (usually approximately 20 grams). If the sample will be extracted using Soxhlet Dean-Stark apparatus (with toluene), no sodium sulfate should be added.

11.10.3 Quantitatively transfer the sample into a clean Soxhlet thimble and top with extracted glass wool.

11.10.4 Spike the sample aliquot with the labeled spiking solution (CI2-#).

11.10.5 For each sample or sample set (up to 10) to be extracted in the same eight-hour shift, weigh two 10 g aliquots of clean fish or of the corn oil reference matrix and place each aliquot into a Soxhlet thimble. If larger batches (up to 20) are to be extracted, include an additional aliquot of reference matrix material. Spike as described in 11.2.6.

11.10.6 Store any remaining sample in the freezer at approximately -18°C.

11.10.7 If the sample will be extracted using Soxhlet Dean-Stark apparatus (with toluene), no sodium sulfate should be added.

11.10.8 Place the loaded thimble into the Soxhlet apparatus.

11.10.9 Add 250 mL of hexane/methylene chloride (1:1 v/v) and reflux for 16-18 hours.

11.10.10 Cool and place a pre-rinsed Snyder column on the 500 mL round bottom flask for concentration. The extract can otherwise be quantitatively transferred to a K-D flask and concentrated on a steam bath.

11.10.11 Concentrate to approximately 10 mL. Remove and allow to cool for 5 minutes.

11.10.12 Rinse Snyder column down into the flask with three 2 mL portions of hexane.

11.10.13 Perform the acid washes and cleanup as described (11.15). For tissue and food samples, acid cleanup is not considered optional. The column acid wash procedure may be preferable to the separatory funnel procedure.

NOTE: The first acid wash should not be shaken. Slowly pour the first 50 mL of sulfuric acid into the separatory funnel and allow to separate for 15 minutes. Drain the acid and perform the remaining washes in the normal manner.

11.10.14 Concentrate to 1 mL using KD and N-evap apparatus and proceed with sample cleanup.

11.10.15 Alternatively, the sample can be extracted using Soxhlet Dean-Stark apparatus and toluene. No sodium sulfate is used with this option.

11.11 Preparation of High Fat Food and Feed Samples

11.11.1 Preparation

11.11.1.1 Fatty samples containing over 10% lipid may utilize a blender to extract the lipid (or use same procedure as low fat foods). A ratio of approximately 1 part sample:2 parts sodium sulfate:3 parts methylene chloride should be used for the extraction. The lipid extraction is performed in triplicate with two minutes of blending per extraction and the extracts are combined. The solvent volume may be reduced to 1-2 parts on the second and third extractions. When performed in this manner, an aliquot of the lipid (after solvent removal) is spiked with internal standards and treated as the sample (see below for spiking and QC procedures). The lipid aliquot may then be dissolved with hexane (5x wt.) and taken directly to the analyte enrichment procedures. Note that petroleum ether may be substituted for methylene chloride during the lipid extraction. Food samples requiring the EU TEQ levels should be extracted using the sample weights described in Attachment 6. The food project dilutions of the labeled standards should be substituted for the normal level standards.

11.11.1.2 Corn oil is used as the reference matrix for fatty food and feed matrices. An amount approximately equivalent to the lipid weight of the field sample should be used.

11.11.1.3 Weigh out an aliquot (see Attachment 4) of the extracted lipid sample into a clean beaker and spike the aliquot with the diluted internal standard spiking solution. Dissolve the sample in hexane using approximately 5x the weight of lipid sample.

11.11.1.4 Quantitatively transfer the sample into a clean drying column.

11.11.1.5 For each sample or sample set (up to 10) to be extracted in the same eight-hour shift, weigh two similarly sized aliquots of the corn oil reference matrix and place each aliquot into a clean beaker. If larger batches (up to 20) are to be extracted, include an additional aliquot of reference matrix material.

11.11.1.6 Spike one reference sample with 1 mL of the diluted internal standard spiking solution. This aliquot will serve as the method blank.

11.11.1.7 Spike the other aliquot(s) with 1 mL of the diluted internal standard spiking solution and with 1 mL of the diluted native spiking solution. This (they) will serve as the laboratory control spike(s). If matrix spikes are prepared with the extraction batch, only one laboratory spike is required. If included, matrix spikes are prepared in the same manner as laboratory spikes except using sample material rather than reference matrix.

11.11.1.8 Store any remaining sample in the freezer at approximately -18°C.

11.11.2 Extraction

11.11.2.1 Place the loaded thimble into the Soxhlet apparatus.

11.11.2.2 Add 250 mL of hexane/methylene chloride (1:1 v/v) and reflux for 16 – 18 hours.

11.11.2.3 Cool the Soxhlet apparatus and place a pre-rinsed Snyder column on the 500 mL round bottom flask for concentration. The extract can otherwise be quantitatively transferred to a K-D flask and concentrated on a steam bath.

11.11.2.4 Concentrate to approximately 10 mL. Remove and allow to cool for 5 minutes.

11.11.2.5 Rinse snyder column down into the flask with three 2 mL portions of hexane.

11.11.2.6 Perform the column acid washes and cleanup as described (11.15). For food samples, acid cleanup is not considered optional.

11.11.2.7 Alternatively, the sample can be extracted using Soxhlet Dean-Stark apparatus and toluene. No sodium sulfate is used with this option.

11.12 Preparation of Low Fat Food and Feed Samples

11.12.1 Preparation

11.12.1.1 Low fat and non-fat samples should be prepared for extraction as described above. Food samples required to meet the EU TEQ levels should be extracted using the sample weights described in Attachment 6. The food project dilutions of the labeled standards should be substituted for the normal level standards.

11.12.1.2 Corn oil is used as the reference matrix for fatty food and feed matrices. An amount approximately equivalent to the lipid weight of the field sample should be used.

11.12.1.3 Sodium sulfate or sand may be used as the reference matrix for non-fat food and feed samples. Again, the amount used should be equivalent to the amount of field sample being extracted.

11.12.1.4 If the sample is to be Soxhlet extracted and is not already finely ground, grind the sample using a meat grinder or hand blender.

11.12.1.5 Weigh an aliquot (see Attachment 4) of the homogenized sample into a clean beaker. Mix in enough extracted anhydrous sodium sulfate to dry the sample. If the sample will be extracted using Soxhlet Dean-Stark apparatus (with toluene), no sodium sulfate should be added.

11.12.1.6 Quantitatively transfer the sample into a clean Soxhlet thimble and top with extracted glass wool.

11.12.1.7 Spike the sample aliquot with the diluted internal standard spiking solution.

11.12.1.8 For each sample or sample set (up to 10) to be extracted in the same eight-hour shift, weigh two similarly sized aliquots of the corn oil reference matrix and place each aliquot into a Soxhlet thimble. If larger batches (up to 20) are to be extracted, include an additional aliquot of reference matrix material.

11.12.1.9 Spike one reference sample with 1 mL of the diluted internal standard spiking solution. This aliquot will serve as the method blank.

11.12.1.10 Spike the other aliquot(s) with 1 mL of diluted internal standard spiking solution and 1 mL of the diluted native spiking solution. This (they) will serve as the laboratory control spike(s). If matrix spikes are prepared with the extraction batch, only one laboratory spike is required. If included, matrix spikes are prepared in the same manner as laboratory spikes except using sample material rather than reference matrix.

11.12.1.11 Store any remaining fat based samples in the freezer at approximately –18°C.

11.12.1.12 Extract samples as described above (Section 11.11.2)

11.13 Blood and Serum Samples

11.13.1 Preparation

11.13.1.1 Quantitatively transfer approximately 50 grams of blood or serum into a 250-mL glass jar using 3 x 5-mL rinses of ethanol. If the aliquot represents the entire sample, spike the sample with the labeled spiking solution (C12-#) and equilibrate for 1 hour prior to the transfer. Otherwise, spike after transfer.

11.13.1.2 Determine the weight of the sample by difference using the weight of the sample container before and after the sample is removed. If the sample was completely removed from the original container, also measure the volume of sample extracted.

11.13.1.3 For each sample or sample set (up to 10) to be extracted in the same eight-hour shift, weigh two similarly sized aliquots of de-ionized water and place each into separate jars. If larger batches are to be extracted, include an additional aliquot of the reference material. If available, aliquots of pooled blood may otherwise be used as reference material Spike as described in 11.2.6.

11.13.2 Extraction

11.13.2.1 Add 50 mL of saturated ammonium sulfate, 35 additional mL of methanol and 50 mL of hexane to the sample. Extract by shaking or tumbling for 30 minutes.

11.13.2.2 Allow the hexane layer to separate (centrifuge if necessary) and remove the hexane (top) layer.

11.13.2.3 Dry the hexane by passing it through a dosium sulfate column or funnel and collect in a KD receiver.

11.13.2.4 Repeat the hexane extraction two additional times with fresh 50 mL aliquots of hexane.

11.13.2.5 Concentrate down and transfer to a small vial. Concentrate to dryness and determine the percent lipid in the sample by weight. This is typically 0.1 to 0.3 grams per 50 mL sample.

11.13.2.6 Re-dissolve the sample in hexane, spike with the cleanup standard, and proceed to extract enrichment (11.15).

11.13.2.7 Store any remaining blood samples in the freezer at < 0º C.

11.14 Preparation of Oil Based Food Product Samples

11.14.1 Corn oil is used as the reference matrix for oil based food and feed matrices.

11.14.2 Weigh out a 10-gram aliquot (use 20 grams if EU requirements apply) of the oil based sample into a clean 8 ounce soil jar and spike the aliquot with the internal standard spiking solution.

11.14.3 Add 50 mL of hexane to the sample and dissolve by sonication.

11.14.4 For each sample or sample set (up to 10) extracted in the same twelve-hour shift, weigh two 10-gram aliquots of the corn oil reference matrix and place each aliquot into a clean beaker. If larger batches (up to 20) are to be extracted, include an additional aliquot of reference matrix material.

11.14.5 Spike one reference sample with 1 mL of the internal standard spiking solution. This aliquot will serve as the method blank.

11.14.6 Spike the other aliquot(s) with 1 mL of the internal standard spiking solution and with 1 mL of the native spiking solution. This (they) will serve as the laboratory control spike(s). If

matrix spikes are prepared with the extraction batch, only one laboratory spike is required. If included, matrix spikes are prepared in the same manner as laboratory spikes except using sample material rather than reference matrix.

11.14.7 Proceed to "Super Carbon First" enrichment (11.15.5).

11.15 Extract Enrichment/Cleanup Procedures

11.15.1 Back Extraction with Acid - Microscale

NOTE: This enrichment step is optional. It is used on extracts based on appearance and color. If the extract is cloudy, emulsive, or multi-layered, this back extraction is employed. It is also used when the extract is not clear or if the sample appears particularly dirty (i.e. multi-layer, sludge-like) or contains various organic materials (i.e. milk, fish, vegetation, etc.). Most samples undergo this procedure.

11.15.1.1 Spike each extract with 250 µL of the clean-up std. Prior to concentration using KD and N-evap apparatus.

11.15.1.2 Quantitatively transfer H_2O and Soxhlet extract with 15 mL of hexane to 40 mL vials. Extracts obtained using the ASE method should be concentrated to almost dryness (~1mL) and 15 mL of hexane added.

11.15.1.3 Partition the extract against 2-3 mL concentrated sulfuric acid. Shake for two minutes with periodic venting into a hood. Remove and discard the acidic bottom layer. Emulsions may be broken down by mechanical or chemical means.

11.15.1.4 Repeat 11.15.1.3, the acid washing, until no color is visible in the aqueous layer, to a maximum of four washings.

11.15.1.5 Acid waste is collected, and then stored in labeled containers for disposal. Use caution when handling.

11.15.1.6 Repeat step 11.15.1.3, but substitute buffer solution (100 mL 0.5 M KH_2PO_4 and 31 mL 1:0 NaOH).

11.15.2 Back Extraction with Acid – Macroscale

NOTE: This enrichment step is optional. It is used on extracts based on appearance and color. of the extract is cloudy, emulsive, or multi-layered, this back extraction is employed. It is also used when the extract is not clear or if the sample appears particularly dirty (i.e. multi-layer, sludge-like) or contains various organic materials (i.e. milk, fish, vegetation, etc.). Most samples undergo this procedure.

11.15.2.1 Spike the separatory funnel with 250 µL of the cleanup standard (CCl4-#).

11.15.2.2 Quantitatively transfer with 100 mL of hexane and partition the extract in 50 mL 1N-sodium hydroxide. Shake for two minutes with periodic venting into a hood. Remove and discard the aqueous bottom layer. Emulsions may be broken down by mechanical or chemical means. The sodium hydroxide wash may be omitted at the discretion of the technician.

11.15.2.3 Only one NaOH rinse is needed.

11.15.2.4 Partition the extract in 50 mL concentrated sulfuric acid. Shake for two minutes with periodic venting into a hood. Remove and discard the acidic bottom layer. Emulsions may be broken down by mechanical or chemical means.

11.15.2.5 Repeat the acid washing until no color is visible in the aqueous layer, to a maximum of four washings.

11.15.2.6 Partition the extract against 50 mL of the 5%(w/v) sodium chloride solution in the same way as with acid. Discard the aqueous layer.

11.15.2.7 Acid waste is collected, and then stored in labeled containers for disposal. Use caution when handling.

11.15.2.8 Pour the extract through a drying column containing 7 to 12 cm of anhydrous sodium sulfate and a pre-rinsed glass wool plug. Rinse the separatory funnel with three 20 mL portions of hexane and add to the column. Collect the extract in a 500 mL KD evaporator flask.

11.15.2.9 Add 1 to 2 clean boiling chips to the receiver and attach a three ball macro Snyder column. Preset the column by adding approximately 1 mL of hexane through the top. Place the KD apparatus in a hot water bath so the entire lower rounded surface of the flask is bathed in steam.

11.15.2.10 Adjust the vertical position of the apparatus and the water temperature as required to complete the concentration in 15 to 20 minutes. At the proper rate of distillation, the balls of the column will actively chatter but the chambers will not flood. DO NOT ALLOW THE EXTRACT TO GO TO DRYNESS.

11.15.2.11 When the liquid has reached an apparent volume of 1 mL, remove the KD apparatus from the steam bath and allow to drain and cool for at least 10 minutes. Remove the Snyder column and rinse the flask and its lower joint into the concentrator tube with 1-2 mL of hexane.

11.15.2.12 Remove the concentrator tube from the apparatus, concentrate to approximately 1 mL on the N-evap and proceed with column cleanup.

11.15.3 Back Extraction with Acid – Column Method

NOTE: This enrichment step is the preferred approach for food and feed matrices. Acid washes are not considered optional for food and feed matrices.

11.15.3.1 If the sample has not already been quantitatively transferred to a drying column, do so at this time. The sample should be dissolved in hexane at a 1:5 weight to weight ratio or to a minimum volume of 100 mL, whichever is greater. Slowly pour the first 50 mL of sulfuric acid into the drying column containing the sample extract, stir gently and allow separating for 15 minutes. Drain the acid and perform the remaining washes in a similar manner until the extract is free from color. Emulsions may be broken down by mechanical or chemical means. The column acid wash procedure may be preferable to the separatory funnel procedure for non-food matrices as well.

11.15.3.2 Acid waste is collected, and then stored in labeled containers for disposal. Use caution when handling.

11.15.3.3 The washed extract can then be collected in a beaker prior to silica or allowed to drip directly onto a pre-washed silica column (described below). If allowed to drip, fill the macro silica column to approximately 50% of the available solvent volume with sample material and allow the silica column to flow. Collect the hexane extract in a clean 500 mL beaker. Adjust the sample extract flow rate to a rate similar to that of the silica column.

11.15.3.4 When the sample has eluted through the silica to a point where the hexane extract just covers the silica, elute the silica with another 500 mL of hexane. Again, after filling approximately 50% of the available solvent volume, adjust the reservoir flow rate to a rate similar to that of the silica column. Collect the entire hexane elution volume in the 500 mL beaker.

11.15.4 High Fat Clean-up Using Carbon First

11.15.4.1 Prepare and elute a carbon column as described below with the following exceptions:

11.15.4.2 Prepare the column in a 12 mm wide glass tube rather than the normal 8 mm tube used for carbon.

11.15.4.3 Double the amount of carbon/Celite used to 1 gram.

11.15.4.4 The lipid sample is typically dissolved in hexane (1:1 V:V) prior to addition to the carbon column. Additional hexane or the application of heat may be required to prepare a non-viscous sample for the column. Allow the sample to equilibrate for 30 minutes to ensure that a stable solution has been achieved.

11.15.4.5 When the sample elution is near completion, the column is washed with an additional 60 mL of hexane.

11.15.4.6 The analytes are eluted with 50 mL of toluene rather than the standard 30 mL.

11.15.4.7 After the carbon procedure, the extract is taken through the macro silica and standard alumina columns described below.

11.15.5"Super Carbon First" Column

11.15.5.1 Prepare carbon/Celite packing by mixing 18% (by weight) 100–400 mesh active carbon (pre-washed in methanol and dried in a vacuum oven at 110°C) and 82% (by weight) Celite. Mix thoroughly.

11.15.5.2 Bake the mixture at 130°C for 6 hours. Store in desiccator.

11.15.5.3 The column is prepared in the same glassware used for jumbo silica cleanup. Rinse the tube three times with 1 mL portions of hexane.

11.15.5.4 Insert a silanized glass wool plug at one end (~2" from the end of the column) and pack with 1 cm of Celite followed by 3.0 g of the carbon/Celite mixture. Cap the end with a silanized glass wool plug. Note: Tap the column between layers to level out the resins.

11.15.5.5 Rinse the column "clean (Celite)" side up with 30 mL of hexane. The flow rate should be less than 0.5 mL/minute. If the flow rate is greater than 0.5 mL/minute, discard the column. Discard the rinses.

11.15.5.6 While the column is still wet with hexane, quantitatively transfer the sample extract to the top of the column and rinse the jar with two 10 mL aliquots of hexane. If necessary use a 3rd 10 mL hexane rinse to completely transfer the sample to the column. Note: Add the sample and rinses slowly using sonication or vortexing as needed to keep the sample dissolved.

11.15.5.7 Collect the hexane containing the sample matrix as waste, periodically rinsing the bottom of the column with fresh hexane to remove any residual oil matrix from the column.

11.15.5.8 Carefully turn the column upside down and elute the PCDDs and PCDFs with 50 mL of toluene. If carbon is present in the eluate, filter through a 0.45 µm glass fiber filter rinsing with an additional 2 mL of toluene.

11.15.5.9 Evaporate the toluene to near dryness, add 1 mL of hexane and spike the sample with cleanup standard before proceeding to the jumbo silica column and alumina column cleanups described below.

11.15.5.10 An equivalent carbon column may be substituted so long as the data meet method requirements.

11.15.6 Silica Column

11.15.6.1 Vertically clamp a disposable glass column, 12 mm ID x 35 cm. Rinse three times with hexane, air dry, and place a pre-extracted silanized glass wool plug into bottom.

11.15.6.2 Pack the column in the following order (bottom to top): 1 g neutral silica, 2 g basic silica, 4 g acidic silica and 2 g neutral silica. Between each layer, tap the column to settle the silica. Wet column with 10 mL hexane after the basic silica layer is added. Plug the end of the column with a septa when it starts dripping. Check the column for channeling. If channeling is observed, discard the column. DO NOT allow the column to go dry. An additional 2 gram layer of 22% acidic silica may be added just above the 44% acidic silica layer to lessen the possibility of charring.

11.15.6.3 Spike the extract with the cleanup standard (CCl4-#), if it has not already been added.

11.15.6.4 Quantitatively transfer the sample extract onto the column using 2-2 ml rinses of hexane. Break off the tip of the column containing the septum. Elute until the solvent just covers the silica. Do NOT let the column go dry.

11.15.6.5 Elute the column with 90 mL hexane. Collect the eluant in a 100 mL beaker.

11.15.6.6 An equivalent silica column may be substituted so long as the data meet method requirements.

11.15.6.7 Jumbo-silica columns may be prepared using three times the amount of the silica noted above in each layer of the column. Larger macro-silica columns may be prepared using nine times the amount of the silica noted above in each layer of the column. These columns are prepared in drying tubes and are eluted with approximately 300 mL or 500 mL of hexane, respectively.

11.15.6.8 Problematic matrices (i.e., adipose tissue, waste samples, etc.) may be processed by mixing up to 100 grams of acid silica into the sample extract. The extract should then be processed through the above silica column and remaining cleanup steps.

11.15.7 Alumina Column

11.15.7.1 Pack a silanized glass wool plug into the bottom of a disposable glass column (12 mm ID x 35 mm). Pack the column in the following order: 4 g of anhydrous sodium sulfate, 7 g of neutral alumina, and 4 g of anhydrous sodium sulfate to cover the alumina. Between layers, tap the top of the column gently to settle the adsorbents.

11.15.7.2 Elute with 10 mL hexane. Plug the bottom of the column with a septum just before exposure of the sodium sulfate layer to the air. Discard the eluate. Check the column for channeling. If channeling is present, discard the column. DO NOT TAP A WETTED COLUMN AND DO NOT LET THE COLUMN GO DRY.

11.15.7.3 Quantitatively transfer the sample to the top of the column with 2-2 ml of hexane. Elute the sample with 10 mL hexane to complete the transfer of the sample cleanly to the surface of the alumina. Archive the eluate until after sample analysis.

11.15.7.4 Elute with 35 ml of 60% (v/v) methylene chloride in hexane and collect this fraction in a 12 dram vial.

11.15.7.5 Concentrate the extract to near dryness using an N-evap apparatus.

11.15.7.6 An equivalent alumina column may be substituted so long as the data meet method requirements.

11.15.8 Carbon Column

11.15.8.1 Prepare carbon/Celite packing by mixing 18% (by weight) 100–400 mesh active carbon (pre-washed in methanol and dried in a vacuum oven at 110°C) and 82% (by weight) Celite. Mix thoroughly.

11.15.8.2 Bake the mixture at 130°C for 6 hours. Store in desiccator.

11.15.8.3 Prepare an 8 mm glass tube about one foot in length. Rinse the tube three times with 1 mL portions of hexane.

11.15.8.4 Insert a silanized glass wool plug at one end and pack with 1 cm of Celite followed by 0.5 g of the carbon/Celite mixture. Cap the end with a silanized glass wool plug.

11.15.8.5 Rinse the column "clean (Celite)" side up sequentially with 5 mL of toluene, 2 mL of methylene chloride/methanol/toluene (75:20:5 v/v), 2 mL of cyclohexane/methylene chloride (1:1 v/v) and 5 mL hexane. The flow rate should be less than 0.5 mL/minute. If the flow rate is greater than 0.5 mL/minute, discard the column. Discard the rinses.

11.15.8.6 While the column is still wet with hexane, quantitatively transfer the sample extract to the top of the column with two 2 mL aliquots of hexane.

11.15.8.7 Elute the column sequentially with 2 mL of cyclohexane/methylene chloride (1:1 v/v) and 2 mL of methylene chloride/methanol/toluene (75:20:5 v/v). Archive these eluates until after sample analysis.

11.15.8.8 Turn the column upside down and elute the PCDDs and PCDFs with 10 mL of toluene. If carbon is present in the eluate, filter through a 0.45 µm glass fiber filter rinsing with an additional 2 mL of toluene.

11.15.8.9 An equivalent carbon column may be substituted so long as the data meet method requirements

11.15.9 Florisil Column (Optional, can be performed on final extract if necessary, under the authorization of the GC/MS analyst.)

11.15.9.1 Prepare a column (same dimension as alumina column) by inserting a silanized, pre-extracted glass wool plug. Add 1.5 g of activated Florisil topped with a 1 cm layer of anhydrous sodium sulfate.

11.15.9.2 Pre-elute the column with 20 mL of methylene chloride, followed by 10 mL of hexane. Discard eluants.

11.15.9.3 Quantitatively transfer the extract to the top of the column with 2 mL of hexane.

11.15.9.4 Elute the column with 20 mL of methylene chloride (2% v/v) in hexane. Collect this fraction in a pre-rinsed 8 dram glass vial. Set aside. It may be used as a test of column efficiency.

11.15.9.5 Elute the column with 50 mL of methylene chloride. Collect this fraction in a pre-rinsed 100 mL beaker. Concentrate under a gentle stream of nitrogen to less than 5 mL. Proceed to final extraction preparation.

11.16 Final Extract Preparation

11.16.1 Extract Transfer

11.16.1.1 Concentrate the extract under a gentle stream of nitrogen to a volume of less than 1 mL. Do NOT blow the sample so the portions of the solvent "ride" up the sides of the glass vial.

11.16.1.2 Add 10 µL of tridecane to an autosampler vial to act as a keeper solvent. The keeper solvent is not used for food samples.

11.16.1.3 Quantitatively transfer the extract to the autosampler vial. Rinse the original vial with less than 1 mL of methylene chloride/hexane (60:40 V: V). Transfer rinsate to the autosampler vial. Repeat rinse of the autosampler vial with two additional aliquots (<1 mL) of methylene chloride/hexane. Then blow down extract to the level of the 10 µL keeper solvent or to near dryness for food samples.

11.16.1.4 Add the 10 µL of recovery standard (CR3-#) to the extract and cap. Any unwanted solvent that may remain may still be removed using the N-evap. A final volume of 20 uL, 10 uL for food and feed samples, should be verified at this time based on solvent height in the vial. Cap and vortex each sample vial.

11.16.1.5 Transfer the extracts to the analytical laboratory for analysis. Extracts should be stored in the dark at approximately 4°C or at room temperature.

11.17 Instrument Maintenance

11.17.1 There is no set schedule for the maintenance listed in this section. It is performed on an as needed basis. Regular preventative maintenance is performed by Pace Analytical's service engineer. If the instrument needs to be vented, do the following in this order: close the analyzer isolation valve, turn off the source ion gauge, close the source isolation valve, close all source rough pump valves, allow air into the source chamber through the bleed valve while watching vacuum gauges to ensure leakage does not occur. If any leakage is seen, close the bleed valve and open the main roughing pump valve. Determine the cause of the problem and correct.

11.17.2 The rough pump oil must be changed if the pump fails to produce a vacuum lower than 10^{-1} mbar or if the pump oil becomes excessively dark. To do so, turn off the ion gauge, isolate and turn off the diffusion pump and allow it to cool. When the diffusion pump is cool, isolate and turn off the rough pump. Now drain the oil into a waste container and recap the drain. Add oil up to the full line and turn on the pump. When the gurgling sound stops, open the valve to pump on the instrument. After several minutes, turn on the diffusion pump. Wait another 10-15 minutes and turn on the ion gauge. If it is a source linked pump, the source will need to be evacuated.

11.17.3 When the carrier gas, helium, pressure gets below 500 psi, the tank should be replaced.

11.17.4 The chromatographic column used for these analyses is the DB-5MS in a 60 meter length. As with any column, these will degrade in time. Once this degradation reaches the point where EPA Method 8290 criteria are not met, the column needs to be replaced. Similar results are required for the DB-225 confirmation column.

11.17.5 All maintenance must be documented. Routine maintenance, such as changing septa, is recorded in the instrument run log. Other 'major' maintenance is documented in the maintenance log specific to each system.

11.18 Sample Analysis

11.18.1 Introduce PFK into the batch inlet and tune the instrument to a resolution of ≥ 10,000 (M/ΔM, 10% valley) using a PFK peak within the analysis mass range (M/Z 331 or 381).

Typical Operating conditions include:

Trap current:	500-700 µA
Electron Energy:	32 ± 5 eV
Source Temperature:	270 °C
Emmision/Trap Ratio:	≤ 3
Accelerating Voltage:	8000 eV

11.18.2 After calibration and column performance have been established, (per Quality Control Section Guidelines) any spikes are typically analyzed. A blank must be analyzed between calibration standards and client samples.

11.19 Data Processing

11.19.1 The raw data files are imported into the AutoPro data processing program for integration. Information on how to use AutoPro is available in the AutoPro manual that can be accessed on the HRMS group computers. Also, since the DB-5MS capillary column gives partial resolution of 2,3,7,8-TCDF isomer (typically 30-40% valley), second column confirmation analyses are only performed if coelution is exhibited or based upon project requirements.

11.19.2 Note that the window mixture does not need to be queued. Visually inspect the chromatographic data to ascertain the elution times of the first and last eluting isomers of each congener class and chromatographic resolution.

11.19.3 With the elution time information recorded, adjust the method file times so that the group changes occur at points between the elution time of the last isomer of a given class and the first isomer of the following class. The first PeCDF isomer is monitored in Group 1 with the group change set approximately 30 seconds later.

11.20 CALCULATIONS

11.20.1 The PCDD/PCDF isomers (native or labeled) are quantified by comparison of their responses to those of the corresponding/appropriate labeled standard. Relative response factors are calculated from analyses of standard mixtures containing representatives of each of the PCDD/PCDF congener classes at five concentration levels, and each of the internal and recovery standards at one concentration level. The PCDD/PCDF response factors are calculated by comparing the sum of the responses from the two ion masses monitored for each chlorine congener class to the sum of the responses from the two ion masses of the corresponding isotopically labeled standard. See equation 1 for the formula for the response factor calculation.

11.20.2 The levels of PCDD/PCDF in the samples are quantified using the following equation:

$$C = \frac{An \times Qis}{}$$

Ais x W x Rf

where:

C = Concentration of target isomer or congener class

An = Sum of integrated areas for the target isomer or congener class

Qis = Quantity of labeled internal standard added to the sample

Ais = Sum of integrated areas for the labeled internal standard

W = Sample amount

Rf = Response factor

11.20.3 A Pace Reporting Limit (PRL), equivalent to the practical quantitation limit, is determined based on the amount of sample extracted, the volume of the final extract, and the concentration of the lowest level in the standard curve. Levels detected below the PRL are reported as not detected at the PRL. Blanks may be reported to 1/3 the PRL (Method 1613 Section 17.6.1.4), to the PRL or to the LOD, based on project requirements. A PRL was calculated for isomer/isomer group using the following equation:

$$PRL = \frac{C \times V}{W}$$

where:

PRL = Pace Reporting Limit

C = Concentration of lowest level standard

V = Volume of final extract

W = Initial sample weight or volume

If based on project requirements, lower reporting limits are needed, results may be reported as low as the signal to noise based limits of detection. Any values outside the calibration range should be flagged as estimated values.

11.20.4 A limit of detection (LOD) may be calculated based on the signal to noise ratio of the noise level of the ion of interest versus the appropriate standard, is calculated for each sample and isomer. The equation used for calculating the LOD is:

$$LOD = \frac{Hn \times Qis \times 2.5}{His \times W \times Rf}$$

Where:

LOD = Limit of Detection

Hn = Sum of noise heights for target isomer

Qis = Quantity of labeled internal standard added to the sample

His = Sum of signal heights from labeled internal standard

W = Initial sample weight or volume

Rf = Response factor

11.20.5 The recovery of the 2,3,7,8-TCDD-$^{37}Cl_4$ enrichment efficiency standard and each $^{13}C_{12}$-labeled internal standard, relative to either 1,2,7,8-TCDD-$^{13}C_{12}$ or 1,2,3,7,8,9-HxCDD-$^{13}C_{12}$, is calculated using the following equation:

$$\%R = \frac{Ais \times Qrs \times 100}{Rfr \times Ars \times Qis}$$

where:

%R = Percent recovery of labeled internal standard

Ais = Sum of integrated areas of labeled internal standard

Qrs = Quantity of recovery standard

Ars = Sum of integrated areas of recovery standard

Rfr = Response factor of the specific labeled internal standard relative to the recovery standard

Qis = Quantity of the labeled internal standard added to the sample

12 QUALITY CONTROL

12.1 The quality of the sample processing steps and instrument performance are monitored on a routine basis. The procedures and criteria are summarized below.

12.1.1 Internal standards are spiked into each sample prior to extraction in order to monitor the level of recovery that is achieved for each individual sample. Acceptable recoveries ranges for the internal standards are included in Attachment 3 and are used unless a deviation is due to variation in instrument response as a result of analytical interferences. Results outside the target range must be flagged. The analysis may be repeated based on project requirements.

12.1.1.1 Since the method is based on isotope dilution, the accuracy of native congener determinations is generally not affected when an internal standard recovery falls outside the target range. If a small number of internal standards fail, the data will be narrated. If a large number of internal standards have low recoveries, the lab will re-extract (if possible). If the failures appear to be attributable to the analysis (not the extraction), we will often re-analyze the extract.

12.1.1.2 If recoveries are outside of the target range and it appears that matrix interferences are the cause, samples can be diluted or processed through further clean-up steps and re-analyzed. If recoveries are still outside of the target ranges, the data will be reported with flags.

12.1.2 Prior to each analysis, the resolution of the mass spectrometer is verified to be 10,000 or greater. Hardcopies of the reference peaks are printed at the beginning and end of each analytical shift. The resolving power of the DB-5MS chromatographic column is checked daily using a standard solution containing 2,3,7,8-TCDD and the adjacent TCDD isomers. When second column confirmations are performed, the DB-225 (or equivalent) column resolution is checked using a standard solution containing 2,3,7,8-TCDF and the adjacent TCDF isomers. Acceptable performance is achieved when 2,3,7,8-TCDD or 2,3,7,8-TCDF is resolved from the adjacent isomers by a valley of 25% or less. The group times for the selected-ion-monitoring data acquisitions are also checked daily using the column performance mix that contains the first and last eluting isomers of each congener class. In this way one is assured of collecting data representative of the total PCDD/PCDF content and the 2,3,7,8-substituted isomers are suitably resolved. The isomers described above are also available as part of the CS-3 calibration solution (EPA 1613 CS3 WT).

12.1.3 Initial calibrations are generated using standard solutions containing target native and labeled PCDD/PCDF compounds. Response factors are calculated and averaged for each compound.(See Equation 1) These averages are used for quantification and for comparison to the daily continuing calibration. The relative standard deviation for each native compound must be 20% or less (30% or less for the labeled compounds) as specified in method 8290.

12.1.4 A continuing calibration standard (or VER) is analyzed at the beginning of each 12-hour shift on days when initial calibrations are not performed.

12.1.4.1 The initial calibration is considered to be valid when the response factors from the continuing calibration analysis agree to within the acceptance limits described in Attachment 3.

12.1.4.2 If the continuing calibration does not meet method criteria, correct the problem and repeat the continuing calibration or initiate a new initial calibration.

12.1.4.3 The absolute retention time of the recovery standards should be within ± 15 seconds of the ICAL values.

12.1.4.4 Calculate the RF values as described in Equation 1. Then calculate the %Difference using Equation 4.

Equation 4

$$\%Difference = \frac{RF_1 - RF_c}{RF_1} x100$$

Where:
RF1=Average response factor from initial calibration.
RFc=Response factor from current verification check standard.

12.1.4.5 Typically samples will not be analyzed until the above criteria can be met. In the event that samples are analyzed using an unacceptable curve, the samples will be re-analyzed with an acceptable initial calibration. If this is not possible, data will be qualified accordingly.

12.2 Qualitative Analysis

In order for a peak to be accepted as a PCDD/PCDF isomer, the following criteria must be met:

12.2.1 Intensity ratios must be within 15% of the theoretical isotope ratio.

12.2.2 The signal to noise of the peak versus the background noise must be >2.5:1.

12.2.3 No PCDF peak may have a co-eluting peak in the mass window monitored for polychlorinated diphenylethers.

12.2.4 The peak elutes within the retention time determined from the analysis of the column performance window mix standard.

12.3 Data Acceptance/Rejection Criteria and Corrective Action

12.3.1 Extraction Corrective Action

12.3.1.1 If a laboratory error occurs during the extraction process that results in the loss of an extract prior to final concentration and transfer of the sample, a new aliquot may be re-extracted and added to the original batch. The new aliquot must be set up within 24 hours for the set up of the first sample in the extraction batch or it must be put into a new batch. This may include a QC aliquot.

12.3.1.2 Make note of any error and corrective action on the extraction sheet. Include times of laboratory error and re-set up of the aliquot.

12.3.2 Method Blank

12.3.2.1 One method blank is typically prepared with each twenty samples of any given matrix.

12.3.2.2 A method blank or solvent blank must be analyzed between standards and samples to demonstrate lack of PCDD/PCDF carryover.

12.3.2.3 If the blank contains PCDDs/PCDFs, find and correct the source of the problem.

12.3.2.3.1 If the contamination appears to be instrument related, correct the problem, analyze a solvent blank, and reanalyze the method blank before proceeding with samples.

12.3.2.3.2 If the contamination appears to be from the extraction or enrichment steps, the analysis of samples may continue. If the sample shows similar contamination it should be re-extracted, if possible. All associated sample results will be qualified for blank contamination when any analyte is detected in the method blank at 10% of more of the sample concentration.

12.3.2.3.3 If the blank shows no contamination above levels of the lowest calibration solution, analysis of samples may continue. However, all associated sample results will be qualified for blank contamination when any analyte is detected in the method blank at 10% of more of the sample concentration. Blank levels within the extended calibration range used for food and feed samples may be acceptable if levels do not impact the usefulness of results for their intended purpose (samples are within acceptance range or significantly above acceptance range).

Note: Ohio VAP requires data to be qualified if there are any detections in the blank and samples also have detections

12.3.3 Laboratory Control Spike (OPR)

12.3.3.1 At a minimum, one laboratory control spike (OPR) is prepared with each batch of samples (up to 20) of any given matrix. The recoveries of the native PCDD/PCDF analytes in the spiked samples are monitored verses performance-based limits calculated annually. Method specific limits are noted in Attachment 3. Matrix spikes are not required by this method, if performed, they should meet the criteria described in Method 8290 (within 20% relative percent difference, unless affected by sample levels).

NOTE: Recoveries of up to 2 native analytes outside the acceptable range do not invalidate the data but provide information that is used by the laboratory to monitor recovery trends and to assure optimization of the method. Any failure cannot occur for the same set of analytes in two consecutive batches. Affected samples will be re-extracted and reanalyzed if possible, or the data will be qualified with a detailed explanation of data impact in the narrative section of the final report.

12.3.3.2 Calculate the %recovery using Equation 5 and the RPD using Equation 6. Control limits can be found in Attachment 3.

Equation 5

$$\text{Percent Recovery} = \frac{C_q}{C_a}(100)$$

where, C_q=Quantitated concentration of compound *x* in ppbv;
C_a=Actual concentration of compound *x* in ppbv.

Equation 6

$$\text{RPD} = \frac{R1 - R2|}{(R1+R2)/2_i}(100)$$

where, *R1*=result for sample 1
R2=result for sample 2

12.3.4 Accuracy of the standard spiking solutions should be verified with each initial calibration by comparison of the solutions to certified native materials obtained from a second source or batch.

12.3.4.1 A set of four (4) spikes are analyzed when the method is first set up or if any significant change to the analytical procedure is made. The results from these analyses must meet the criteria for the IPR as described in section 9.2 of Method 1613.

12.3.4.2 For food and feed matrices, three low level spikes (approximately 0.5, 1 and 2 times the given acceptance TEQ limit) are required in lieu of the IPRs and MDLs. These spikes must agree to within the limits set by the regulatory agency (currently TEQs that agree to within 20% and yield coefficients of variation of 15% or less for European Union samples).

12.3.5 Ongoing participation in food based performance studies and ISO 17025 accreditation are also required for samples requiring acceptance by the European Union.

12.3.6 Method detection limit studies shall be performed annually for selected matrices: solids, aqueous, tissue and any others deemed appropriate by QA and management personnel.

12.4 REPORTING AND REVIEW

12.4.1 Reports are prepared using previous reports as templates and making modification as appropriate. The amount of information included with the report is determined based on the client requirements. Reports may also be software generated to provide similar formats.

12.4.2 Units/Significant Figures

12.4.2.1 Values are reported to two significant figures. Aqueous samples are routinely reported in units of ng/L and solid matrices are reported in ng/Kg. Other units are available upon request.

12.4.3 Data Qualifiers/Flags

12.4.3.1 The information typically reported is summarized below.

12.4.3.2 Base Report

12.4.3.2.1 Case Narrative including client name, address, and project information, introduction, sample information, and discussion of results.

12.4.3.2.2 Copies of chain of custody documents and analytical requests

12.4.3.2.3 Data summary tables

12.4.3.3 Full Report

12.4.3.3.1 Those items listed in base report summary

12.4.3.3.2 Methodology, including example calculations and QA/QC summary.

12.4.3.3.3 Raw data including sample, QC sample and standards

12.4.3.3.4 Selected ion current profiles (chromatograms)

12.4.3.3.5 Communications records

12.4.3.3.6 Extraction and login forms

12.4.3.3.7 Instrument resolution checks

12.4.3.3.8 Calibration Results

12.4.3.4 Those items included in the report may be tailored to the client's requirements and may not fit into the above stated categories. A checklist is available to assure completeness of full reports (Attachment II).

12.5 Levels of Review

12.5.1 Each sample work-up must be rechecked for work-up, header information, and data entry accuracy. The results of this review are recorded on the data review sheet.

12.5.2 All data generated during analysis are peer reviewed and a review checklist is completed. The project manager reviews the data prior to inclusion in the final report.

12.6 Data Archiving or Filing

12.6.1 Initial and Continuing Calibration standard data are stored in a QA notebook located near each instrument.

12.6.2 After reporting, the complete project file is archived in the permanent chemistry archive.

13 METHOD PERFORMANCE

13.1 There are several requirements that must be met to insure that this procedure generates accurate and reliable data. A general outline of requirements has been summarized below. Further specifications may be found in the Laboratory Quality Manual and specific Standard Operating Procedures.

13.1.1 The analyst must read and understand this procedure with written documentation maintained in his/her training file which is located in the QA Office.

13.1.2 An initial demonstration of capability (IDC) must be performed. A record of the IDC will be maintained in his/her file with written authorization from the Laboratory Manager and Quality Manager. Results are stored in the QA office.

13.1.3 An annual minimum detection limit (MDL) study following SOP ALL-Q-004 will be completed for this method and whenever there is a major change in personnel or equipment. Results are stored in the QA Office.

13.1.4 Periodic performance evaluation (PE) samples are analyzed to demonstrate continuing competence. Results are stored in the QA office.

14 POLLUTION PREVENTION AND WASTE MANAGEMENT

14.1 The quantity of chemicals purchased is based on expected usage during its shelf life and disposal cost of unused material. Actual reagent preparation volumes should reflect anticipated usage and reagent stability.

14.2 The Environmental Protection Agency (USEPA) requires that laboratory waste management practice be consistent with all applicable rules and regulations. Excess reagents, samples and method process wastes are characterized and disposed of in an acceptable manner. For further information on waste management consult SOP ALL-C-001.

15 REFERENCES

15.1 USEPA Method 1613: Tetra- through Octa- Chlorinated Dioxins and Furans by Isotope Dilution HRGC/HRMS (September 1997, Revision B)

15.2 USEPA Test Methods for Evaluating Solid Waste, Physical/Chemical Methods, SW-846, 3rd Edition, Method 8290, September, 1994

15.3 Commission Directive 2002/70/EC: Establishing Requirements for the Determination of Levels of Dioxins and Dioxin-like PCBs in Feedingstuffs., July 26, 2002.

15.4 Commission Directive 2002/69/EC: Laying Down the Sampling Methods and Methods of Analysis for the Official Control of Dioxins and the Determination of Dioxin-like PCBs in Feedstuffs., July 26, 2002.

16 TABLES, DIAGRAMS, FLOWCHARTS, APPENDICES, ADDENDA, ETC.

16.1 Attachment 1: Dioxin Extraction Worksheet

16.2 Attachment 2: Package Checklist

16.3 Attachment 3: Acceptance Criteria

16.4 Attachment 4: Food and Feed Extraction Amount

16.5 Attachment 5 Method 8290 Analyte List

16.6 Attachment 6: Theoretical Ion Abundance Ratios and QC limits

17 REVISIONS

Document Number	Reason for Change	Date
MN-H-002-Rev.4	**Additions made to include food matrices:** 6.21 Added definitions of food and feed sample, food, and feed 8.1 Sample size instructions added in attachment VI and noted in this section 10.4.6, 10.7.6, 10.10.6, 10.13.8 Add instructions for low level food spiking solution 10.5.2, 10.8.2, 10.11.2 Add "diluted food native standard solution may be substituted for BN1-# for food samples 10.15 Added directions for calibration and spiking levels for food and feed matrices 10.16 Directions for bringing the calibration range down to a lower level for food and feed matrices. 11.1.1 An exception is made for low level food standards; they require 3:1 signal to noise intensity 12.1.1 Added this section to include glassware used with food matrices and to include extra precautions to follow while cleaning glassware 12.2.3.1 Added "Fatty food samples are reported based on the lipid weight of the	09Sep2004

	sample. Non-fatty food and all feed samples are reported based on the total weight of the sample extracted." 12.2.14 Added this section to include the preparation of high fat food and feed samples 12.2.15 Added this section to include the preparation of low fat food and feed samples 12.3.9 Added "food and feed samples prepared for Soxhlet extraction" 12.4.3 Added section "Back Extraction with Acid – Column Method" as the preferred enrichment step for food and feed matrices 13.3.1.3.3 Added "Blank levels within the extended calibration range used for food and feed samples may be acceptable if levels do not impact the usefulness of results for their intended purpose (samples are within acceptance range or significantly above acceptance range)" 13.3.2.5&6 Added performance studies, MDLs, and accreditation Added Attachment VI **Other changes made:** 4.7 Changed wording of chromatographic interference guidelines to "the area from least affected signal of the pair"; to be more specific 6.40 Added an exception to the definition of Reporting Limit when signal to noise based limits of detection are used. 11.2.1.5 Remove 25:00 timeframe for elution of 1,2,3,4-TCDD 12.3.8.7 Remove "If acid washes are not required, transfer the extract through a drying column containing a 10 cm plug of glass wool and sodium sulfate, and combine with the filtrate portion of the extract (if applicable). Rinse the flask with hexane (3 x 30 mL) and add to the drying column." 12.4.3 Added section for Back Extraction with Acid – Column Method 12.4.5.8 Added section for Jumbo-silica and larger macro-silica columns 12.9.4 Added LOD section Updated attachments	
MN-H-002-Rev. 5 MN-H-002-Rev. 6	Sections 12.1.16 and 12.3.10 added for preparation and extraction of blood samples, respectively 10.5 Delete preparation of Internal Standard Spiking solution 13 Clarify levels of data review and delete annual review of control limits.	07 Mar 05 **11Jul2006**
S-MN-H-002-Rev.07	Updated front page format Added Sect 12.2.17 and 12.4.5	30July2007
S-MN-H-002-Rev.08	Added Attachment 5 Removed wording to record volume of water from sections 12.3.2.4.2, 12.3.3.3.2, 12.3.5.2 Section 12.4.7.1 changed 4g to 7g Section 12.4.7.3 Changed 20mL to 10mL Section 12.4.7.4 Changed 20mL to 35mL and 8 dram to 12 dram Added 13.3 Laboratory Error Corrective Action process	27Aug2007
S-MN-H-002-Rev.09	Removed Responsibilities and Distribution section Removed ASE procedure section Moved all extraction procedures to follow preparation procedures. Consolidated some of the redundant preparation procedures and put them at the beginning pf section 11. Added additional equations for calculations (%Recovery RPD) Updated SOP reference in waste section Added corrective actions to 12.1.1 12.3.2.6 Added caveat to method blank section for Ohio VAP criteria Added additional corrective actions to 12.1.5 and referenced them in section 10.2.2 Corrected concentration of 13C12-OCDD in 9.13.4 Added attachment 6 with reference in 10.2.1 Added reference to Percent Lipid Determination SOP in 11.2.4.	**04Feb2008**

ATTACHMENT 1: Dioxin Extraction Worksheet (Solids)

DIOXIN EXTRACTION WORKSHEET

Setup By _____

DummyForQCForms_1

Extraction Batch : EB-02837

Extraction On (Date/Time): _____

Extraction Off (Date/Time): _____

Client(s):

Extract Solvents
Toluene Lot # _____
Hexane Lot # _____
MeCl Lot # _____

Acid Base:
Sulphuric Acid Lot # _____
Buffer Soln # _____

Silica:
Neutral Batch # _____
Basic Batch # _____
Acid Batch # _____

Standards
Internal Std _____
Cl-37 Std _____
Recovery Std _____
Tridecane _____
Native _____
Others _____
Alumina Lot _____

Alumina:
Date _____
Initials _____
Temp _____
Hexane Lot # _____
60% Batch # _____
Humidity _____

Silica:
Date _____
Initials _____
Temp _____
Hexane Lot # _____
Humidity _____

Carbon:
Date _____
Initials _____
Temp _____
Toluene Lot # _____
75% Batch # _____
50% Batch # _____
Hexane Lot # _____
Humidity _____

Method EPA 8290 Method 1613 TO9 Method23 PCB1668
Matrix PUF XAD Solid Water Tissue Other _____

	Sample #	Labeled Stds	Native Stds	mL or g Extracted	Filtered	Cl-37 Std	Mineral Oil	Acid	Buffer Soln	Silica	Alumina	Carbon	Rec Std	Glassware Set	Comments
1	BLANK-5445														Extraction QC
2	BLANK-5446														Extraction QC
3	BLANK-5447														Extraction QC
4	BLANK-5448														Extraction QC

Extracts Relinquished By: _____ **Received By:** _____ **Date:** _____

ATTACHMENT 1 (continued): Dioxin Extraction Worksheet (Solids)

DIOXIN EXTRACTION WORKSHEET

DummyForQCForms_1

Extraction Batch : EB-02837

Extraction Notes

ATTACHMENT 1 (continued): Dioxin Extraction Worksheet (Water)

DIOXIN EXTRACTION WORKSHEET

Setup By _____

Dummy-Water-QC

Extraction Batch : EB-02838

Extraction On (Date/Time): _____

Extraction Off (Date/Time): _____

Client(s):

Extract Solvents
Toluene Lot # _____
Hexane Lot # _____
MeCl Lot # _____

Acid Base:
Sulphuric Acid Lot # _____
Buffer Soln # _____

Silica:
Neutral Batch # _____
Basic Batch # _____
Acid Batch # _____

Standards
Internal Std _____
Cl-37 Std _____
Recovery Std _____
Tridecane _____
Native _____
Others _____
Alumina Lot _____

Alumina:
Date _____
Initials _____
Temp _____
Hexane Lot # _____
60% Batch # _____
Humidity _____

Silica:
Date _____
Initials _____
Temp _____
Hexane Lot # _____
Humidity _____

Carbon:
Date _____
Initials _____
Temp _____
Toluene Lot # _____
75% Batch # _____
50% Batch # _____
Hexane Lot # _____
Humidity _____

Method EPA 8290 Method 1613 TO9 Method23 PCB1668
Matrix PUF XAD Solid Water Tissue Other _____

	Sample #	Labeled Stds	Native Stds	Full Bottle Wt.	Empty Bottle Wt.	Filtered	Cl-37 Std	Mineral Oil	Acid	Buffer Soln	Silica	Alumina	Carbon	Rec Std	Glassware Set	Comments
1	BLANK-5449															Extraction QC
2	BLANK-5450															Extraction QC
3	BLANK-5451															Extraction QC
4	BLANK-5452															Extraction QC

Extracts Relinquished By: _____ **Received By:** _____ **Date:** _____

Form H008a (15Sep2004)

ATTACHMENT 1 (continued): Dioxin Extraction Worksheet (Water)

DIOXIN EXTRACTION WORKSHEET

Dummy-Water-QC

Extraction Batch : EB-02838

Extraction Notes

ATTACHMENT 2: Package Checklist

Pace Analytical™

Full Validation Package Checklist

Text	_____	Case Narrative
	_____	Tables
Appendix A	_____	Chain of Custody
	_____	Copy of Airbill
	_____	"Blackout" Sheet
	_____	Extraction Sheet Copy
	_____	Moisture Sheet Copy
	_____	HRMS Logbook Page Copies
	_____	HRMS Resolution Check Copies (If Requested)
Appendix B	_____	Sample Results
Appendix C	_____	Blank Results
	_____	Spike Results
	_____	MS/MSD Relative Percent Difference Results
	_____	Calibration Results
Appendix D	_____	Sample Chromatograms
	_____	Sample Raw Data
Appendix E	_____	Standard Chromatograms
	_____	Standard Raw Data
Appendix F	_____	Blank Chromatograms
	_____	Spike Chromatograms
	_____	Blank Raw Data
	_____	Spike Raw Data

ATTACHMENT 3 : Acceptance Criteria

A. Acceptance Criteria for Performance Tests When All CDDs/CDFs are Tested[1]

CDD/CDF	Test Conc. (ng/mL)	s (ng/mL)	IPR[2,3] X (ng/mL)	OPR (ng/mL)	VER (ng/mL)
2,3,7,8-TCDD	10	2.8	8.3-12.9	6.7-15.8	7.8-12.9
2,3,7,8-TCDF	10	2.0	8.7-13.7	7.5-15.8	8.4-12.0
1,2,3,7,8-PeCDD	50	7.5	38-66	35-71	39-65
1,2,3,7,8-PeCDF	50	7.5	43-62	40-67	41-60
2,3,4,7,8-PeCDF	50	8.6	36-75	34-80	41-61
1,2,3,4,7,8-HxCDD	50	9.4	39-76	35-82	39-64
1,2,3,6,7,8-HxCDD	50	7.7	42-62	38-67	39-64
1,2,3,7,8,9-HxCDD	50	11.1	37-71	32-81	41-61
1,2,3,4,7,8-HxCDF	50	8.7	41-59	36-67	45-56
1,2,3,6,7,8-HxCDF	50	6.7	46-60	42-65	44-57
1,2,3,7,8,9-HxCDF	50	6.4	42-61	39-65	45-56
2,3,4,7,8,9-HxCDF	50	7.4	37-74	35-78	44-57
1,2,3,4,6,7,8-HpCDD	50	7.7	38-65	35-70	43-58
1,2,3,4,6,7,8-HpCDF	50	6.3	45-56	41-61	45-55
1,2,3,4,7,8,9-HpCDF	50	8.1	43-63	39-69	43-58
OCDD	100	19	89-127	78-144	79-126
OCDF	100	27	74-146	63-170	63-159
$^{13}C_{12}$-2,3,7,8-TCDD	100	37	28-134	20-175	82-121
$^{13}C_{12}$-2,3,7,8-TCDF	100	35	31-113	22-152	71-140
$^{13}C_{12}$-1,2,3,7,8-PeCDD	100	39	27-184	21-227	62-160
$^{13}C_{12}$-1,2,3,7,8-PeCDF	100	34	27-156	21-192	76-130
$^{13}C_{12}$-2,3,4,7,8-PeCDF	100	38	16-279	13-328	77-130
$^{13}C_{12}$-1,2,3,4,7,8-HxCDD	100	41	29-147	21-193	85-117
$^{13}C_{12}$-1,2,3,6,7,8-HxCDD	100	38	34-122	25-163	85-118
$^{13}C_{12}$-1,2,3,4,7,8-HxCDF	100	43	27-152	19-202	76-131
$^{13}C_{12}$-1,2,3,6,7,8-HxCDF	100	35	30-122	21-159	70-143
$^{13}C_{12}$-1,2,3,7,8,9-HxCDF	100	40	24-157	17-205	74-135
$^{13}C_{12}$-2,3,4,6,7,8-HxCDF	100	37	29-136	22-176	73-137
$^{13}C_{12}$-1,2,3,4,6,7,8-HpCDD	100	35	34-129	25-166	72-138
$^{13}C_{12}$-1,2,3,4,6,7,8-HpCDF	100	41	32-110	21-158	78-129
$^{13}C_{12}$-1,2,3,4,7,8,9-HpCDF	100	40	28-141	20-186	77-129
$^{13}C_{12}$-OCDD	200	95	41-276	26-397	96-415
$^{37}Cl_4$-2,3,7,8-TCDD	10	3.6	3.9-15.4	3.1-19.1	7.9-12.7

[1] All specifications are given as concentration in the final extract assuming a 20-µL volume.
[2] s = standard deviation of the concentration
[3] X = average concentration

ATTACHMENT 3 (Continued)

B. Acceptance Criteria for Performance Tests When Only Tetra Compounds are Tested [1]

CDD/CDF	Test Conc. (ng/mL)	s (ng/mL)	IPR[2,3] X (ng/mL)	OPR (ng/mL)	VER (ng/mL)
2,3,7,8-TCDD	10	2.7	8.7-12.4	7.3-14.6	8.2-12.3
2,3,7,8-TCDF	10	2.0	9.1-13.1	8.0-14.7	8.6-11.6
$^{13}C_{12}$-2,3,7,8-TCDD	100	35	32-115	25-141	85-117
$^{13}C_{12}$-2,3,7,8-TCDF	100	34	35-99	26-126	76-131
$^{37}Cl_4$-2,3,7,8-TCDD	10	3.4	4.5-13.4	3.7-15.8	8.3-12.1

C. Labeled Compound Recovery in Samples When All CDDs/CDFs are Tested

CDD/CDF	Test Conc. (ng/mL)	Labeled Compound Recovery (ng/mL)[1]	Labeled Compound Recovery (%)
$^{13}C_{12}$-2,3,7,8-TCDD	100	25-164	25-164
$^{13}C_{12}$-2,3,7,8-TCDF	100	24-169	24-169
$^{13}C_{12}$-1,2,3,7,8-PeCDD	100	25-181	25-181
$^{13}C_{12}$-1,2,3,7,8-PeCDF	100	24-185	24-185
$^{13}C_{12}$-2,3,4,7,8-PeCDF	100	21-178	21-178
$^{13}C_{12}$-1,2,3,4,7,8-HxCDD	100	32-141	32-141
$^{13}C_{12}$-1,2,3,6,7,8-HxCDD	100	28-130	28-130
$^{13}C_{12}$-1,2,3,4,7,8-HxCDF	100	26-152	26-152
$^{13}C_{12}$-1,2,3,6,7,8-HxCDF	100	26-123	26-123
$^{13}C_{12}$-1,2,3,7,8,9-HxCDF	100	29-147	29-147
$^{13}C_{12}$-2,3,4,6,7,8-HxCDF	100	28-136	28-136
$^{13}C_{12}$-1,2,3,4,6,7,8-HpCDD	100	23-140	23-140
$^{13}C_{12}$-1,2,3,4,6,7,8-HpCDF	100	28-143	28-143
$^{13}C_{12}$-1,2,3,4,7,8,9-HpCDF	100	26-138	26-138
$^{13}C_{12}$-OCDD	200	34-313	17-157
$^{37}Cl_4$-2,3,7,8-TCDD	10	3.5-19.7	35-197

[1] All specifications are given as concentration in the final extract assuming a 20-µL volume.
[2] s = standard deviation of the concentration
[3] X = average concentration

ATTACHMENT 3 (Continued)

D. Labeled Compound Recovery in Samples When Only Tetra Compounds are Tested

CDD/CDF	Test Conc. (ng/mL)	Labeled Compound Recovery (ng/mL)[1]	Labeled Compound Recovery (%)
$^{13}C_{12}$-2,3,7,8-TCDD	100	31-137	31-137
$^{13}C_{12}$-2,3,7,8-TCDF	100	29-140	29-140
$^{37}Cl_4$-2,3,7,8-TCDD	10	4.2-16.4	42-164

[1] All specifications are given as concentration in the final extract assuming a 20-µL volume.
[2] s = standard deviation of the concentration
3 X = average concentration

ATTACHMENT 4

Food and Feed Extraction Amounts, 10 uL Final Volume

Food or Feed Type	EU Limit	Target PQL	Amount	Weight Basis
Meat, Ruminants	2.0 pg/g	0.4 pg/g	20 grams	Lipid
Meat, Poultry	1.5 pg/g	0.3 pg/g	28 grams	Lipid
Meat, Pig	0.6 pg/g	0.12 pg/g	35 grams	Lipid
Meat, Liver	4.0 pg/g	0.8 pg/g	10 grams	Lipid
Fish, Muscle	3.0 pg/g	0.6 pg/g	15 grams	Lipid
Milk/Milk Products	2.0 pg/g	0.4 pg/g	20 grams	Lipid
Eggs/Egg Products	2.0 pg/g	0.4 pg/g	20 grams	Lipid
Oils & Fats, Ruminants	2.0 pg/g	0.4 pg/g	20 grams	Lipid
Oils & Fats, Poultry	1.5 pg/g	0.3 pg/g	28 grams	Lipid
Oils & Fats, Pigs	0.6 pg/g	0.12 pg/g	35 grams	Lipid
Oils & Fats, Mixed	1.5 pg/g	0.3 pg/g	28 grams	Lipid
Vegetable Oil	0.5 pg/g	0.1 pg/g	40 grams	Lipid
Fish Oil	1.5 pg/g	0.3 pg/g	28 grams	Lipid
Fruits	0.4 pg/g	0.08 pg/g	100 grams	Total
Vegetables	0.4 pg/g	0.08 pg/g	100 grams	Total
Cereals	0.4 pg/g	0.08 pg/g	100 grams	Total
Feed Materials, Plant	0.5 pg/g	0.1 pg/g	80 grams	Total
Minerals	0.5 pg/g	0.1 pg/g	80 grams	Total
Animal Fat, Incl. Milk & Eggs	1.2 pg/g	0.24 pg/g	34 grams	Total
Animal Products	0.5 pg/g	0.1 pg/g	80 grams	Total
Fish Oil	4.5 pg/g	0.9 pg/g	10 grams	Total
Fish	1.0 pg/g	0.2 pg/g	40 grams	Total
Compound Feedstuffs	0.4 pg/g	0.08 pg/g	100 grams	Total
Pet Food	1.5 pg/g	0.3 pg/g	28 grams	Total

ATTACHMENT 5 Method 8290 Analyte List

Compound Name	CAS No[a]
2,3,7,8-Tetrachlorodibenzo-p-dioxin (TCDD)	1746-01-6
1,2,3,7,8-Pentachlorodibenzo-p-dioxin (PeCDD)	40321-76-4
1,2,3,6,7,8-Hexachlorodibenzo-p-dioxin (HxCDD)	57653-85-7
1,2,3,4,7,8-Hexachlorodibenzo-p-dioxin (HxCDD)	39227-28-6
1,2,3,7,8,9-Hexachlorodibenzo-p-dioxin (HxCDD)	19408-74-3
1,2,3,4,6,7,8-Heptachlorodibenzo-p-dioxin (HpCDD)	35822-39-4
1,2,3,4,6,7,8,9-Octachlorodibenzo-p-dioxin (OCDD)	3268-87-9
2,3,7,8-Tetrachlorodibenzofuran (TCDF)	51207-31-9
1,2,3,7,8-Pentachlorodibenzofuran (PeCDF)	57117-41-6
2,3,4,7,8-Pentachlorodibenzofuran (PeCDF)	57117-31-4
1,2,3,6,7,8-Hexachlorodibenzofuran (HxCDF)	57117-44-9
1,2,3,7,8,9-Hexachlorodibenzofuran (HxCDF)	72918-21-9
1,2,3,4,7,8-Hexachlorodibenzofuran (HxCDF)	70648-26-9
2,3,4,6,7,8-Hexachlorodibenzofuran (HxCDF)	60851-34-5
1,2,3,4,6,7,8-Heptachlorodibenzofuran (HpCDF)	67562-39-4
1,2,3,4,7,8,9-Heptachlorodibenzofuran (HpCDF)	55673-89-7
1,2,3,4,6,7,8,9-Octachlorodibenzofuran (OCDF)	39001-02-0

[a] Chemical Abstract Service Registry Number

ATTACHMENT 6

TABLE 9. THEORETICAL ION ABUNDANCE RATIOS AND QC LIMITS

Number of Chlorine Atoms	M/Z's Forming Ratio	Theoretical Ratio	QC Limit [1]	
			Lower	Upper
4 [2]	M/(M+2)	0.77	0.65	0.89
5	(M+2)/(M+4)	1.55	1.32	1.78
6	(M+2)/(M+4)	1.24	1.05	1.43
6 [3]	M/(M+2)	0.51	0.43	0.59
7	(M+2)/(M+4)	1.05	0.88	1.20
7 [4]	M/(M+2)	0.44	0.37	0.51
8	(M+2)/(M+4)	0.89	0.76	1.02

[1] QC limits represent ±15% windows around the theoretical ion abundance ratios.
[2] Does not apply to $^{37}Cl_4$-2,3,7,8-TCDD (cleanup standard).
[3] Used for $^{13}C_{12}$-HxCDF only.
[4] Used for $^{13}C_{12}$-HpCDF only.

Document Number	Reason for Change	Date
	requirement • Incorporated Spare Parts into Instrument/ Equipment Maintenance SECTION 7: • Updated Analytical Results Processing section to clarify data documentation policy. • Deleted "All data that are manually entered into the LIMS is reviewd at a rate of 100%" and deleted the use of checklists statement from Data Verification section • Integrated paragraphs for better flow • Deleted item # 15, "If required, a statement of the estimated uncertainty of the test results." from the Data Reporting section • Added Data Security section to describe PASI data security practices • Added fire, flood, and vermin protection requirement to Data Archiving section • Added statement to Data Archiving section describing that NELAP related records are available to accrediting authorities. • Added Data Disposal section SECTION 8: • Deleted first paragraph stating that Pace labs are subject to internal and external audits and reviews. • Added description of PASI internal audit program and investigations • Added requirement that corrective action be taken and client notified within 3 days if audit findings show that test results may have been affected • Updated requirement for manager(s)/supervisor(s) to respond to audit findings with a plan to correct all deficiencies within 14 days. Statement included that allows Quality Manager to grant additional time for response. • Added to Annual Managerial Review section that "The laboratory shall ensure that any actions identified during the review are carried out within an appropriate and agreed timescale." SECTION 9: • Added documentation requirement for reporting discovery of deficiency or non-conformance, must be documented "on the Non-Conformance Corrective/ Preventative Action report and/or QA Trak." • Added "Preventative actions must be taken in order to prevent or minimize the occurrence of the situation." • Added a paragraph to describe the new PASI Root Cause Analysis procedure. SECTION 10: • Added the following definitions: Contract Required Detection Limit (CRDL), Contract Required Quantitation Limit (CRQL), Corrective and Preventative Action (CAPA), Non Potable Water (to Environmental Sample definition), Intermediate Standard Solution, Quality Control Sample, Stock Standard, Uncertainty Measurement, Working Standard Solution, SECTION 11: • Added ISO/IEC 17025:2005 reference Appendix: • Added Appendix I: Quality Control Calculations	

ATTACHMENT I

Quality Control Calculations

PERCENT RECOVERY (%REC)

$$\%REC = \frac{(MSConc - SampleConc)}{TrueValue} * 100$$

NOTE: The SampleConc is zero (0) for theLCS and Surrogate Calculations

PERCENT DIFFERENCE (%D)

$$\%D = \frac{MeasuredValue - TrueValue}{TrueValue} * 100$$

where:
TrueValue = Amount spiked (can also be the $\overline{CF}$ or $\overline{RF}$ of the ICAL Standards)
Measured Value = Amount measured (can also be the CF or RF of the CCV)

PERCENT DRIFT

$$\%Drift = \frac{CalculatedConcentration - TheoreticalConcentration}{TheoreticalConcentrtion} * 100$$

RELATIVE PERCENT DIFFERENCE (RPD)

$$RPD = \frac{|(R1 - R2)|}{(R1 + R2)/2} * 100$$

where:
R1 = Result Sample 1
R2 = Result Sample 2

CORRELATION COEFFICIENT (R)

$$CorrCoeff = \frac{\sum_{i=1}^{N} W_i * (X_i - \overline{X}) * (Y_i - \overline{Y})}{\sqrt{\left(\sum_{i=1}^{N} W_i * (X_i - \overline{X})^2\right) * \left(\sum_{i=1}^{N} W_i * (Y_i - \overline{Y})^2\right)}}$$

With:	N	Number of standard samples involved in the calibration
	i	Index for standard samples
	Wi	Weight factor of the standard sample no. i
	Xi	X-value of the standard sample no. i
	X(bar)	Average value of all x-values
	Yi	Y-value of the standard sample no. i
	Y(bar)	Average value of all y-values

ATTACHMENT I (CONTINUED)

Quality Control Calculations (continued)

STANDARD DEVIATION (S)

$$S = \sqrt{\sum_{i=1}^{n} \frac{(X_i - \overline{X})^2}{(n-1)}}$$

where:
n = number of data points
X_i = individual data point
$\overline{X}$ = average of all data points

AVERAGE ($\overline{X}$)

$$\overline{X} = \frac{\sum_{n=1}^{i} X_i}{n}$$

where:
n = number of data points
X_i = individual data point

RELATIVE STANDARD DEVIATION (RSD)

$$RSD = \frac{S}{\overline{X}} * 100$$

where:
S = Standard Deviation of the data points
$\overline{X}$ = average of all data points

ATTACHMENT IIA

PASI – MINNESOTA ORGANIZATIONAL CHART

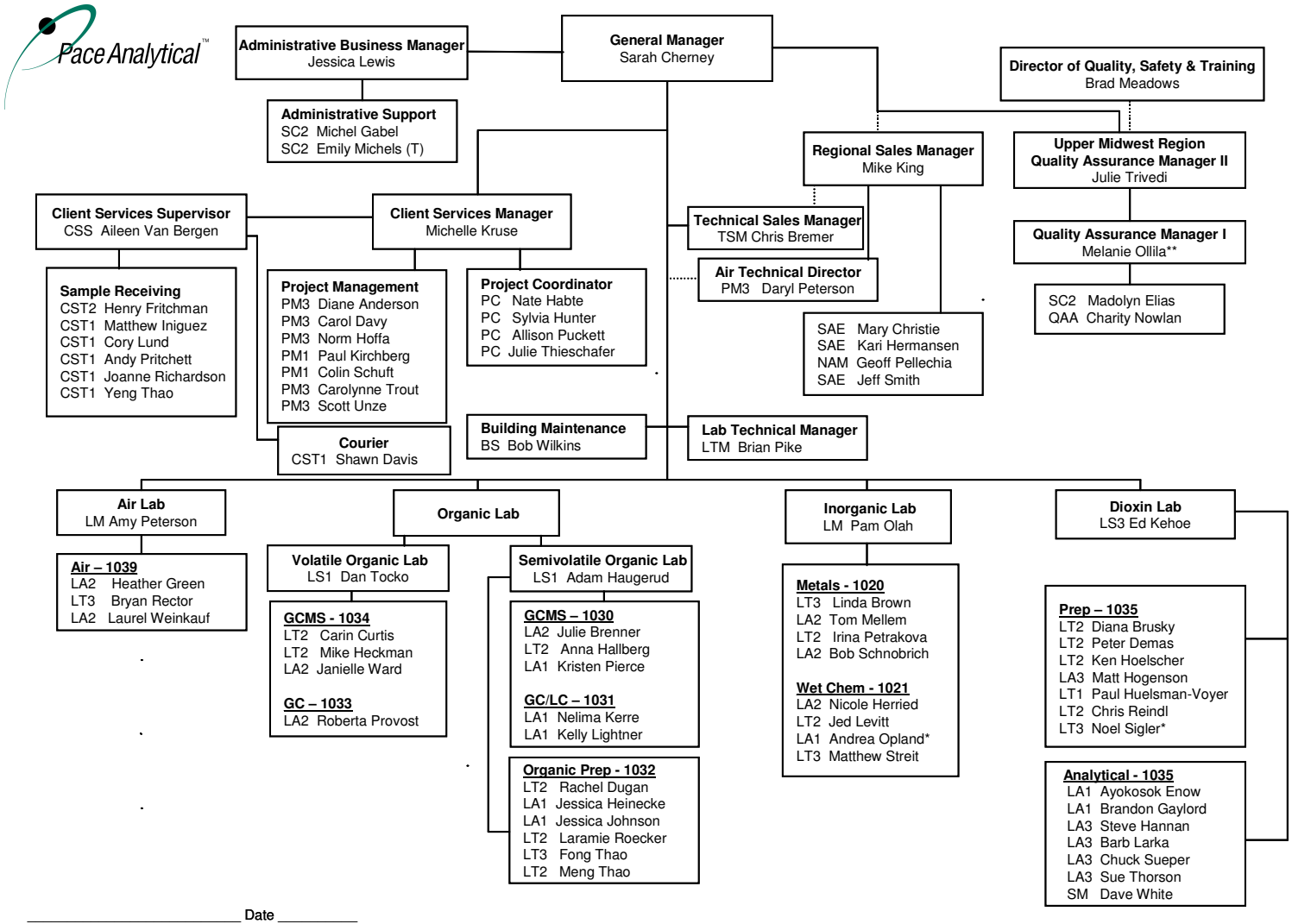

_____ Date _____
Sarah Cherney, General Manager
Last Revised: October 10, 2007
*Lead Analyst
**Safety Officer

Minnesota Laboratory

ATTACHMENT IIB

PASI – CORPORATE ORGANIZATIONAL CHART

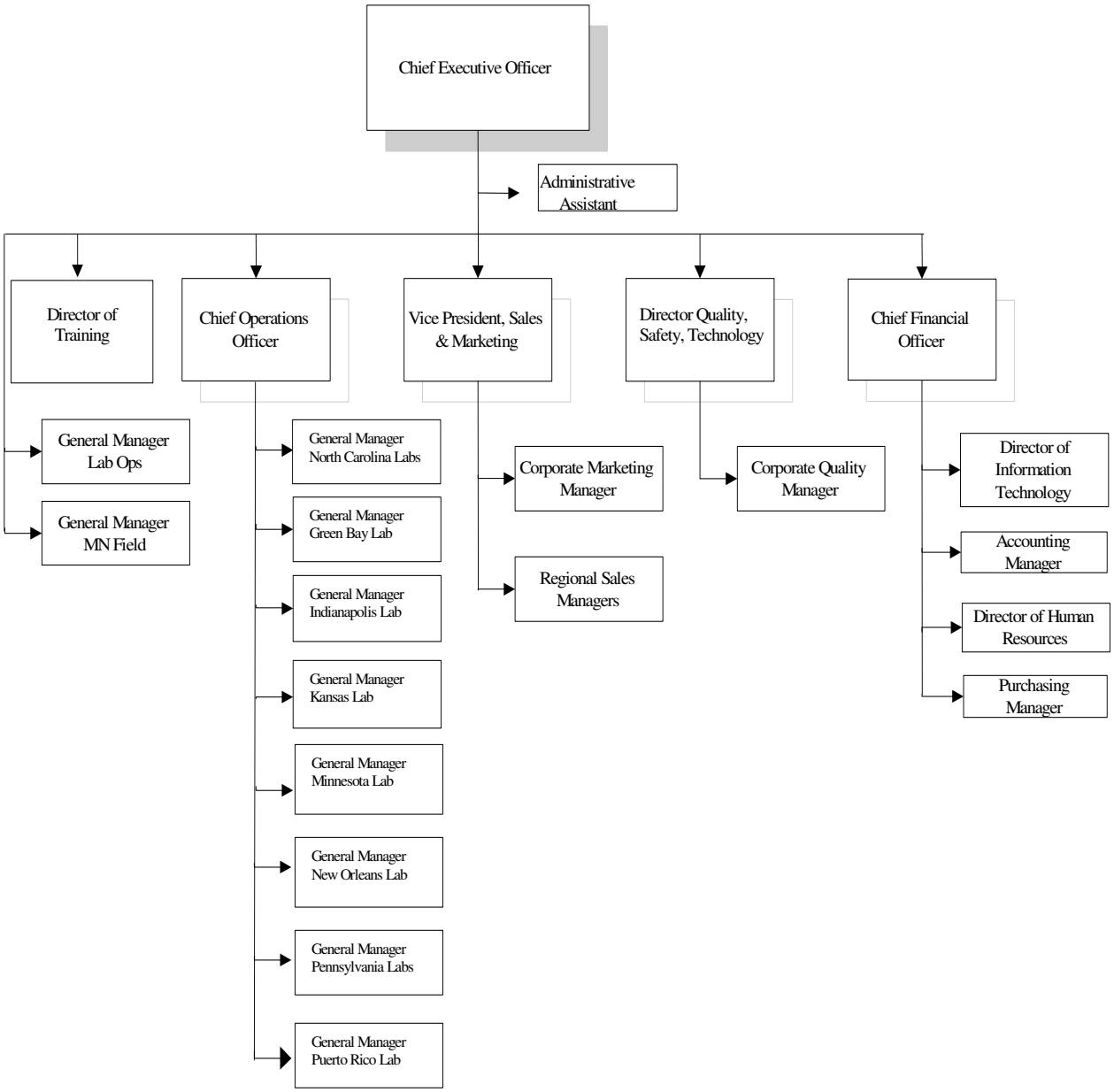

ATTACHMENT III

PASI – MINNESOTA EQUIPMENT LIST

INSTRUMENT	MANUFACTURER	MODEL NUMBER	DETECTOR(S)	ANALYSIS
GC/MS/VOA	Hewlett-Packard	5890	PID/FID	TO3/AIR
GC/MS/VOA	Agilent	6890/5973	MS	TO14/TO15
GC/MS/VOA	Hewlett-Packard	5890/5972	MS	TO14/TO15
GC/MS/VOA	Hewlett-Packard	6890 / 5973	MS	SW8260
GC/MS/VOA	Hewlett-Packard	6890 / 5973	MS	SW8260
GC/MS/VOA	Hewlett-Packard	6890 / 5973	MS	SW8260
GC/MS/VOA	Agilent	6890 / 5973	`	SW8260
GC/MS/VOA	Hewlett-Packard	6890 / 5973	MS	SW8260
GC/MS/VOA	Agilent	6890/5973	MS	524.2
GC/MS/VOA	Agilent	6890/5973	MS	TO14/TO15
GC/MS/SMVOA	Hewlett-Packard	5890 / 5972	MS	BNA
GC/MS/SMVOA	Hewlett-Packard	6890/5973	MS	SIM,agList, cPAH
GC/MS/SMVOA	Hewlett-Packard	5890		8270 SIM
GC/MS/SMVOA	Agilent	6890/5973	MS	SIM,agList, cPAH
GC/MS/SMVOA	Agilent	6890/5973	MS	PCDD/PCDF
GC/MS/SMVOA	Agilent	6890/5973	MS	BNA
GC PETROLEUM RELATED VOLATILES	Hewlett-Packard	5890	PID/FID	BTEX
GC PETROLEUM RELATED VOLATILES	Hewlett-Packard	5890	PID/FID	BTEX
GC PETROLEUM RELATED VOLATILES	Hewlett-Packard	5890	PID/FID	TO3/AIR
GC PETROLEUM RELATED VOLATILES	Agilent	6890/1888	TCD/FID	Headspace
GC PETROLEUM RELATED VOLATILES	Hewlett-Packard	5890	TCD/FID	Fixed Gases
GC PETROLEUM RELATED SMVOA	Hewlett-Packard	5890	FID	DRO
GC SMVOA	Hewlett-Packard	5890	DUAL ECD	PCB
GC SMVOA	Hewlett-Packard	6890	DUAL ECD	Pest/PCB
GC SMVOA	Hewlett-Packard	6890	FID	DRO
HPLC	Hewlett-Packard	1100 Series	UV/FL/MS	PAH
ICP	Perkin-Elmer	Optima 3300DV	SCCD	Metals
ICP	Perkin-Elmer	Optima 4300DV	SCCD	Metals
ICP/MS	Perkin-Elmer	ELAN9000	MS	Metals
MERCURY ANALYZER	Perkin-Elmer	FIMS 100	Spectrometer	Mercury

AUTO ANALYZER	Konelab	20	Spectrometer	Anions
ION CHROMATOGRAPH	Dionex	DX5000	Conductivity	Anions
OVEN	Tempcon	N8620-10	NA	Preparation
OVEN	Lab Line	Imperial II	NA	Preparation
OVEN	Despatch	NA	NA	AIR
OVEN	VWR	1370F	NA	General
OVEN	Precision	STM135	NA	General
OVEN	Thelco	130DM	NA	General
OVEN	Baxter	DK63	NA	HRMS
OVEN	Fisher Scientific	650G	NA	% moisture
OVEN	Fisher Scientific	550-126	NA	General
INCUBATOR	Fisher Scientific	307	NA	BOD
INCUBATOR	VWR	2020	NA	BOD
TURBIDITY	HF Scientific	Micro 100	NA	Turbidity
TURBIDITY	HF Scientific	Micro 100	NA	Turbidity
AUTOCLAVE	Heinicke Co.	Sterilquick	NA	Autoclave
AUTOCLAVE	Market Forge	Sterilmatic	NA	Autoclave
CENTRIFUGE	Becton Dickenson	CompactII	NA	HRMS
HIGH RESOLUTION MASS SPECTROMETER	MicroMass	Ultimas	MS	PCDD/PCDF
HIGH RESOLUTION MASS SPECTROMETER	MicroMass	Ultimas	MS	PCDD/PCDF
HIGH RESOLUTION MASS SPECTROMETER	VG	AUTOSPEC	MS	PCDD/PCDF
HIGH RESOLUTION MASS SPECTROMETER	MicroMass	AUTOSPEC	MS	PCDD/PCDF
DISSOLVED OXYGEN METER	YSI	5000	NA	BOD
ION ANALYZER	Orion	EA 940	NA	pH
ION ANALYZER	Orion	EA 940	NA	fluoride, pH
pH METER	Orion	290A	NA	pH
CONDUCTIVITY METER	Oakton	RS232/CON 110	Probe - 1D7	specific conductivity
COD REACTOR	Bioscience		NA	COD
MICROWAVE EXTRACTION UNIT	Milestone	Ethos E	NA	Dioxin
MIDI DISTILLATION UNIT	Env. Express	Pace # 19582		CN, NH3, phenols
MIDI DISTILLATION UNIT	Env. Express	Pace # 19604		CN, NH3, phenols
METALS MICROWAVE DIGESTOR	CEM Corporation	MDS-2100	NA	Metals Dig
METALS HOT BLOCK	Env. Express	SC 154	NA	Metals Dig
METALS HOT BLOCK	Env. Express	SC 154	NA	Metals Dig
METALS HOT BLOCK	Env. Express	SC 154	NA	Metals Dig
SONICATOR	Misonix	XL 2020	NA	3550

SONICATOR	Misonix	XL 2015	NA	3550
SONICATOR	Misonix	3000		3550
SONICATOR	Misonix	3000		3550
DENVER MAXX BALANCE	Denver Instrumentation	MXX-212	NA	NA
A&D BALANCE	A&D	FX 3200		Soil Prep
BALANCE	A&D	FX 4000	NA	
BALANCE	Mettler	AJ100	NA	
BALANCE	A&D	FX-3200	NA	
MilliQ Purification System	MilliQ	MilliQUV plus	NA	

ATTACHMENT IV

PASI – MINNESOTA

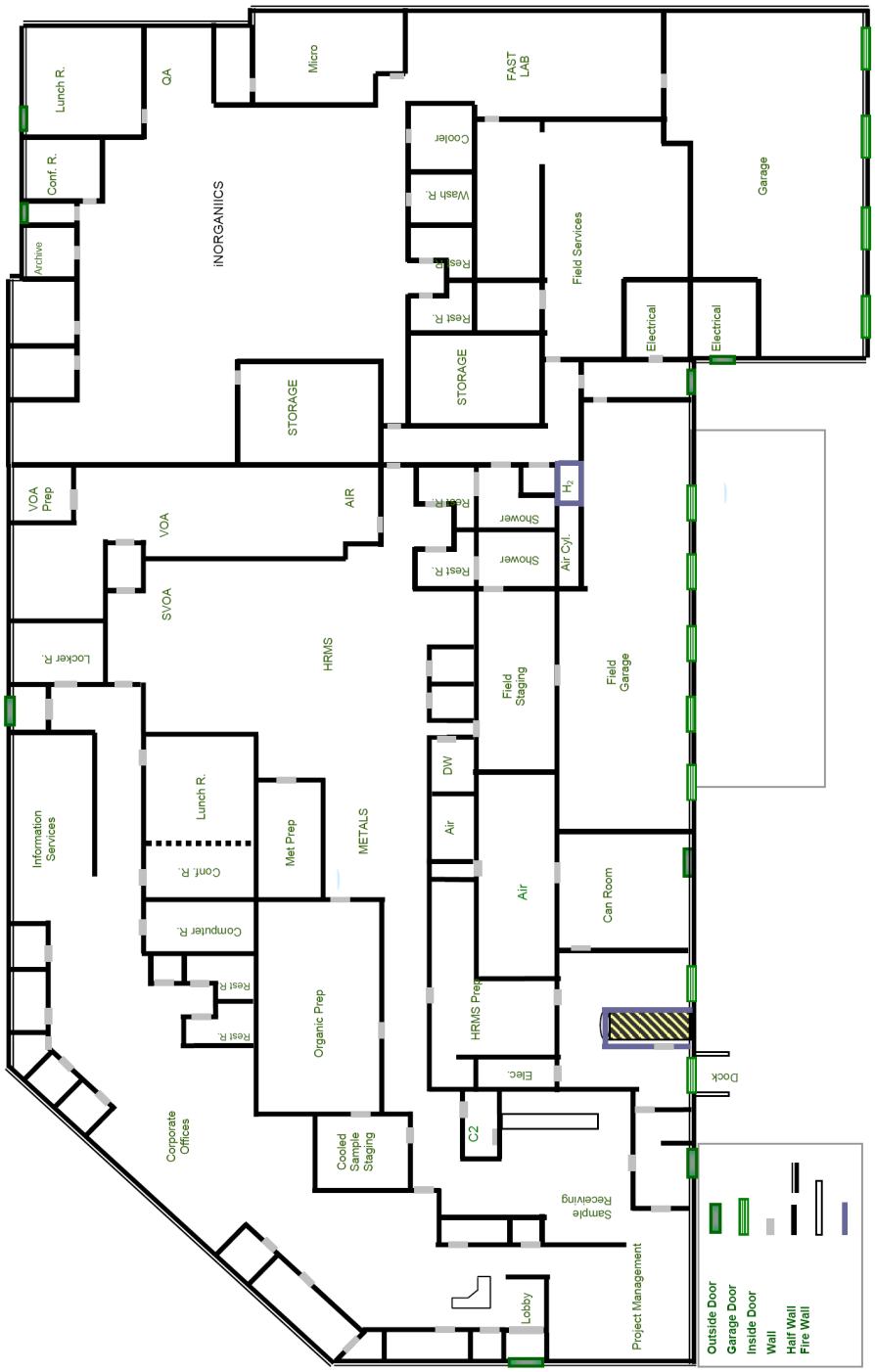

ATTACHMENT V

PASI – MINNESOTA SOP LIST

SOP Title	SOP Number
Determination of Methane, Ethane, and Ethene in Air Modified TO-3	S-MN-A-002
Analysis of Air Samples for Volatile Organic Compounds by Gas Chromatography/PID-FID method TO-3	S-MN-A-003
Cleaning, Certification, Leak Checking and Preparation for Shipment of SUMMA Passivated Canisters	S-MN-A-004
Determination of Fixed Gases in Air by Modified 3C	S-MN-A-005
Methane, Ethane, Ethene, and Propane in Water by GCFID mod. 3810 and RSK 175	S-MN-A-007
Sample Preparation and Analysis of Polychlorinated Biphenyls (PCBs) in Ambient Air using High Volume Polyurethane Foam	S-MN-A-010
Analysis of Whole Air Sample for Volatile Organic Compound by GC/MS EPA TO15/TO14	S-MN-A-013
Analysis of Whole Air Sample for Volatile Organic Compound by GC/MS EPA TO15-SIM	S-MN-A-014
Operation and Maintenance of the Perkin Elmer ELAN 6000 ICP-MS	S-MN-BE-004
Sample Management	S-MN-C-001
Bottle Order Database	S-All-C-002
Bottle Preparatation	S-MN-C-003
Internal Chain of Custody	S-MN-C-005
Subcontracting Samples	S-MN-C-004
Preparing Waste for Shipment	S-MN-C-703
Preparation and Analysis of Samples for the Determination of Dioxins and Furans by USEPA Method 8290	S-MN-H-001
Preparation and Analysis of Samples for the Determination of Dioxins and Furans using USEPA Method 1613B	S-MN-H-002
Preparation and Analysis of Samples for the Determination of 2,3,7,8-TCDD using USEPA Method 1613B, Drinking Water	S-MN-H-003
Percent Lipids Determination	S-MN-H-004
Preparation and Analysis of Samples for the Determination of PCDDs, PCDFs, and PCBs by modified USEPA Method 23, TO9, or NY State Guidelines	S-MN-H-005
Preparation and Analysis of Samples for the Determination of Dioxins and Furans by USEPA Method 8280	S-MN-H-007
Method 1668, PCB Congenger (WHO List)	S-MN-H-009
Method 1653, Chorinated Phenols	S-MN-H-010
Preparation and Analysis of Samples for the Determination of Chlorinated Biphenyl Congeners by USEPA Method 1668A	S-MN-H-014
Preparation and Analysis of Samples for the Determination of Polybrominated Diphenyl Ether Congeners	S-MN-H-016
RapidScreen Analysis of Samples for PCDDs and PCDFs	S-MN-H-017
Determination of Anions by Ion Chromatography	S-MN-I-301
Measurement of Solids in Water and Wastewater	S-ALL-I-014
Measurement of pH in Water, Soil, and Waste	S-ALL-I-015
TCLP/SPLP	S-MN-I-312
Inductively Coupled Plasma Atomic Emission Spectroscopy (RCRA)	S-MN-I-313
Water Extraction of Soil	S-MN-I-334
Hardness by Calculation	S-MN-I-338
Biochemical Oxygen Demand (BOD)	S-MN-I-348
COD-Titrimetric, Low Level	S-MN-I-351

SOP Title	SOP Number
Phenols	S-MN-I-354
Oil & Grease - 1664	S-MN-I-357
Hexavalent Chromiumin in Water, Wastewater, and Soil	S-MN-I-358
Mercury im Liquid and Solid/Semis-Solid Waste	S-MN-I-359
Alkalinity, Titrimetric	S-MN-I-365
Total Cyanide in Water	S-MN-I-366
Percent Solids (Moisture)	S-MN-I-367
Digest Procedure for Aqueous Samples to be Analyzed by Induct Coupled Plasma (SW-846)	S-MN-I-458
Metals Preparation for Solid samples, Wipes and Filters	S-MN-I-460
Fluoride in Water and Wastewater	S-MN-I-470
Chemical Oxygen Demand (COD) in Water, Wastwaters and Industrial Wastes	S-MN-I-472
Total Phosphorus in Water	S-MN-I-473
Specific Conductivity	S-MN-I-474
Total Cyanide in Soil	S-MN-I-476
Ortho Phosphorus	S-MN-I-477
Particulate Matter (PM10) (Method 5) in the Atmosphere	S-MN-I-484
Settleable Solids	S-MN-I-486
Analysis of Air Samples by EPA Method 29	S-MN-I-487
Metals Analysis by ICP/MS - Method 6020 and 200.8	S-MN-I-492
Standard Test Method for Screening Apparent Specific Gravity and Bulk Density Waste	S-MN-I-493
Determination of Total Recoverable Phenolics by Flow Injection Colorimetry	S-MN-I-494
Operation and Maintenance of the MDS-2100 Microwave	S-MN-I-499
Turbidity in Water	S-MN-I-501
Chlorine, Total Residual in Water	S-MN-I-502
Use and Maintenance of the Konelab	S-MN-I-507
Determination of Nitrate/Nitrite in surface and wastewaters by Flow Injection Analysis with the Konelab (Low Flow Method)	S-MN-I-508
Determination of Chloride by Konelab	S-MN-I-509
Determination of Sulfate by Konelab	S-MN-I-510
Determination of Ammonia by Konelab Analysis, Colorimetry	S-MN-I-511
Determination of Nitrite by Konelab(Spectrophotometric Method)	S-MN-I-514
Amenable Cyanide and Weak Dissociable Cyanide in Water	S-MN-I-515
Paint Filter Liquids Test	S-MN-I-516
Mercury in End Caps and Glass Samples	S-MN-I-517
Gravimetric Determination of Oil and Grease by SPE	S-MN-I-520
Determination of Perchlorate by IC	S-MN-I-521
Cyanide Extraction Procedure for Solids and Oils	S-MN-I-522
Preparation of Aqueous Samples for ICPMS Analysis by Method 3030C	S-MN-I-523
System Security and Integrity	S-ALL-IT-001
Back Up Policy	S-ALL-IT-002
Data Archiving	S-MN-L-106
Reagent Water Quality	S-MN-L-110
Generation of EDD	S-MN-L-112
Handling and Analysis of North Carolina Samples	S-MN-L-113
Preventative, routine, and non-routine maintenance	S-MN-L-114
Common Laboratory Calculations and Statistical Evalation of Data	S-MN-L-125
Data Reduction, Validation, and Reporting in the Env Lab	S-MN-L-132

SOP Title	SOP Number
Out of Specification Investigation	S-MN-L-133
Syringe Technique	S-MN-L-139
Procedure for Handling Aqueous Organic Extractable Samples Containing Sediment	S-MN-L-142
Total Coliform Bacteria	S-MN-MB-001
Fecal Coliform by MF	S-MN-MB-002
Heterotrophic Plate Count	S-MN-MB-003
Total Coliform Bacteria by MF	S-MN-MB-005
Sample Container Sterility Verification	S-MN-MB-006
Method For Sonicator Tuning	S-MN-O-414
Determination of Polynuclear Aromatic Hydrocarbons in Soil (8310)	S-MN-O-419
The Determination of Specific Aromatic Compounds and Gasoline Range Organic in Water	S-MN-O-427
Analysis of Polychlorinated Biphenyls in Oil, Soil, Water, Wipe and Air Matrixes	S-MN-O-432
Extractable Base/Neutral and Acid Organic Compounds in Liquid, Solid, and TCLP Matrices by Gas Chromatography/Mass Spectrometry Capillary Column Technique	S-MN-O-436
Determination of Polynuclear Aromatic Hydrocarbons in Water (8310 and EPA 610)	S-MN-O-449
Cleaning Glassware in the Organic Laboratory	S-MN-O-465
Determination of Diesel Range Organics in Water (Wisconsin modified DRO)	S-MN-O-466
Determination of Diesel Range Organics in Soil (Wisconsin modified DRO)	S-MN-O-467
Determination of Organophosphorus Pesticides in Water and Soil (MN.Dept.of AG list 1)	S-MN-O-471
The Determinaiton of Specific Aromatic Compounds and Gasoline Range Organics in Soil	S-MN-O-487
Determination of Diesel Range Organics In Water & Soil SW8015 (Modified)	S-MN-O-489
Determination of Acid Cleanup of PCB Extracts	S-MN-O-494
Sonication Extraction Technique (SW3550) for Base/Neutral and Acid Compounds	S-MN-O-495
Continuous Liquid-Liquid Extraction (SW3520) for Base/Neutral and Acid Compounds	S-MN-O-496
Spike Verification in the Organic Prep Lab	S-MN-O-497
Preparation of Anhydrous Sodium Sulfate for Extraction Purposes	S-MN-O-500
Nitrogen Evaporation Technique	S-MN-O-503
Sample Concentration Technique	S-MN-O-504
Continuous Liquid-Liquid Extraction (SW3520) for Polyaromatic Hydrocarbons by 8270-SIM	S-MN-O-506
8270-L Extractable Base/Neutral and Acid Organic Compounds in Water and Liquid Matrices by GC/MS Capillary Column Technique w/Selective Ion Monitoring	S-MN-O-507
Solvent Exchange into Hexane	S-MN-O-509
Sample Conversion to Acetonitrile	S-MN-O-510
Analysis of Volatile Organic Compounds by GC/MS Method 8260	S-MN-O-521
Purgeable Total Petroleum Hydrocarbons in Water (8015 Mod / CA LUFT/ NWTPH/OA-1)	S-MN-O-525
Copper Cleanup Procedure for Pesticides and Polychlorinated Biphenyls	S-MN-O-527
Analysis of Volatile Organic Compounds by GC/MS Method 624	S-MN-O-529
Extractable Base/Neutral and Acid Organic Compounds in Liquid by EPA Method 625	S-MN-O-532
Analysis of Air samples by GC/MS - Method TO-13	S-MN-O-534
Continuous Liq/Liq extraction for Method 8270C (Dual pH) by SW 3520C	S-MN-O-539
Soxhlet Extraction for PAH Analysis by GC/MS:SIM	S-MN-O-540
Volatiles Sample Compositing Procedure	S-MN-O-541
Analysis of Volatile Organic Compounds in Water Method 524.2	S-MN-O-546
Extraction and Analysis of PCBs From Acid-Soluble Solids-Eastman Method	S-MN-O-548
Extractable Base/Neutral and Acid Organic Compounds in Liquid by EPA Method 525	S-MN-O-549
Low Level Extractable Base/Neutral and Acid Organic Compounds by GC/MS Capillary Column Technique	S-MN-O-552
Sample Management	S-MN-C-001

SOP Title	SOP Number
Bottle Preparatation	S-MN-C-003
Internal Chain of Custody	S-MN-C-005
Subcontracting Samples	S-MN-C-004
Preparation of SOPs	S-ALL-Q-001
Document Management	S-ALL-Q-002
Document Numbering	S-ALL-Q-003
Method and Instrument Detection Limit Studies	S-ALL-Q-004
Purchasing of Laboratory Supplies	S-All-Q-005
Receipt and Storage of Laboratory Supplies	S-ALL-Q-006
Laboratory Documentation	S-ALL-Q-009
Performance Evaluation (PE)/Proficiency Testing (PT) Program	S-ALL-Q-010
Audits and Inspection	S-ALL-Q-011
Corrective Action/ Preventative Action Process	S-ALL-Q-012
Support Equipment	S-ALL-Q-013
Quality System Review	S-ALL-Q-014
Manual Integrations	S-ALL-Q-016
Subcontracting Samples	S-ALL-Q-017
Monitoring Storage Units	S-ALL-Q-018
Training Procedures	S-ALL-Q-020
Sub-Sampling (Sample Homogenization)	S-ALL-Q-021
3P Program: CIP	S-ALL-Q-022
Standard and Reagent Prepartion and Traceability	S-ALL-Q-025
Use and Operation of Lab Track System	S-ALL-Q-028
Precision and Accuracy Measurement, Evaluation, and Trend Assessment	S-MN-Q-205
Control of Hazardous Energy Program - Lockout/Tagout	S-MN-Q-249
Method Validation and Modification Studies	S-MN-Q-252
Procedure for Handling of USDA regulated soils	S-MN-Q-253
Laboratory Spreadsheet Validation	S-MN-Q-254
Estimation of Measurement Uncertainty	S-MN-Q-255
Hazard Assessments	S-ALL-S-001
Waste Handling	S-ALL-S-002

ATTACHMENT VI

PASI – MINNESOTA CERTIFICATION LIST

State	Agency	Program	Cert #
Alabama	Dept of Environmental Mgmt	Dioxin-DW	40770
Alaska	Dept. of Environmental Conservation	Contaminated Sites (6010B, 6020, 8260B, PCBs, PAHs)	UST-078
Alaska	Dept. of Environmental Conservation	Dioxin-DW	MN64-07
Arizona	Dept of Health Services	Dioxin-DW, WW, HW	AZ0014
Arkansas	Dept of Environmental Quality	Dioxins	88-0680
California	Dept of Health Services	Dioxin-DW, WW, HW Envir-DW, WW, HW	01155CA
Colorado	Dept. of Public Health & Environment	Dioxin-DW	Pace Analytical
Connecticut	Dept of Public Health	Dioxins	PH-0256
Delaware	Health & Solical Services	Dioxin-DW	
EPA Region 5	Water Division	Dioxin-DW	WD-15J
EPA Region 8	Water Division	Dioxin-DW	8TMS-Q
Florida (NELAP)	Dept of Health Services	Diox-DW, WW, HW, Air Envir-DW, WW, HW, Air	E87605
Georgia	Environmental Protection Division	Dioxin-WW, HW via NELAP	E87605
Georgia	Dept of Natural Resources	Dioxin-DW	959
Guam	Guam EPA	Dioxin-DW	Pace Analytical
Idaho	Dept. of Health & Welfare	Dioxin-DW	Pace Analytical
Hawaii	Dept of Health	Dioxin-DW	SLD
ILLA	ILLA	ISO 17025	1706.01
Illinois	Illinois EPA	Dioxin-DW, HW, WW via NELAP	200011
Indiana	Dept of Health	Dioxin-DW via EPA Region 5	C-MN-01
Iowa	Dept.of Natural Resources	Envir.-DW, WW, UST	368

Kansas	Dept of Health and Environment	Dioxin-DW Envir-DW, WW, HW	E-10167
Kentucky	Dept of Environmental Protection	Dioxin-DW	90062
Louisiana	Department of Environmental Quality	Dioxin-WW, HW, Air	3086
Louisiana	Department of Health and Hospitals	Dioxin-DW	LA050005
Maine	Dept of Human Services	Dioxin-DW via EPA Region 5	2007029
Maryland	Dept. of Heath and Mental Hygiene	Dioxin-DW	322
Michigan	Dept. of Public Health	Dioxin-DW	9909
Minnesota	Dept of Health	Envir-DW, WW, HW Dioxin-DW, WW, HW	027-053-137
Mississippi	Dept. of Health and Environmental Control	Dioxin-DW	Pace
Nebraska	Dept. of Health & Human Services.	Dioxin-DW	Pace
Nevada	Health Division	Dioxin-DW, WW	MN_00064_2000_72
New Jersey	Dept of Environmental Protection	Dioxin-DW, WW, HW Envir-WW, HW, Air	MN002
New Mexico	NM Environment Dept. Drinking Water Bureau	Dioxin-DW	Pace
New York	Dept of Health	Dioxin-DW, WW, Air Envir-Air	11647
North Carolina	Dept of Environment, Health and Natural Resources	Envir-WW, HW	530
North Carolina	State Public Health Laboratory	Dioxin-DW	27700
North Dakota	Dept of Health and Consolidated Labs	Envir-DW, WW, HW	R-036
Ohio	Ohio EPA	Dioxin-DW via EPA Region 5	4150
Oklahoma	Dept of Environmental Quality	Dioxin-DW Envir-HW	D9921 9507
Oregon	ELAP	Dioxin-DW, WW, HW, Air Enviro: Air	MN200001
Pennsylvania	Dept of Environmental Protection	Dioxin-DW, WW, HW Envir: DW, WW, HW	68-00563

Saipan (CNMI)	Div. Of Environmental Quality	Dioxin-DW	Pace Analytical
South Carolina	Dept. of Health and Environmental Control	Dioxin-DW, WW, HW	74003001
Texas	Department of Health	Dioxin-DW, WW, HW	T104704192-07-TX
Tennessee	Dept of Health	Dioxin-DW Envir-DW	2818
Utah	Department of Health	Dioxin-DW, WW, HW	ID# PAM Account# 6126071700
Virginia	Dept of General Services	Dioxin-DW	251
Washington	Dept of Ecology	Dioxin-DW, WW, HW Envir-DW, WW, HW	C754
Wisconsin	Dept of Natural Resources	Dioxin-DW, WW, HW Envir-DW, WW, HW	999407970
West Virginia	Dept of Health and Human Resources	Dioxin-DW	9952C

ATTACHMENT VII

PASI – CHAIN OF CUSTODY

CHAIN-OF-CUSTODY / Analytical Request Document

The Chain-of-Custody is a LEGAL DOCUMENT. All relevant fields must be completed accurately.

Pace Analytical™ www.pacelabs.com

Page: of

Section A Required Client Information:
Company:
Address:
Email To:
Phone: Fax:
Requested Due Date/TAT:

Section B Required Project Information:
Report To:
Copy To:
Purchase Order No.:
Project Name:
Project Number:

Section C Invoice Information:
Attention:
Company Name:
Address:
Pace Quote Reference:
Pace Project Manager:
Pace Profile #:

REGULATORY AGENCY
☐ NPDES ☐ GROUND WATER ☐ DRINKING WATER
☐ UST ☐ RCRA ☐ OTHER _____
Site Location STATE: _____

Section D Required Client Information

Matrix Codes MATRIX / CODE: Drinking Water DW, Water WT, Waste Water WW, Product P, Soil/Solid SL, Oil OL, Wipe WP, Air AR, Tissue TS, Other OT

SAMPLE ID (A-Z, 0-9 / ,-) Sample IDs MUST BE UNIQUE

ITEM #	SAMPLE ID	MATRIX CODE (see valid codes to left)	SAMPLE TYPE (G=GRAB C=COMP)	COLLECTED COMPOSITE START DATE	COLLECTED COMPOSITE START TIME	COLLECTED COMPOSITE END/GRAB DATE	COLLECTED COMPOSITE END/GRAB TIME	SAMPLE TEMP AT COLLECTION	# OF CONTAINERS	Preservatives Unpreserved	H_2SO_4	HNO_3	HCl	NaOH	$Na_2S_2O_3$	Methanol	Other	Analysis Test (Y/N)	Requested Analysis Filtered (Y/N)	Residual Chlorine (Y/N)	Pace Project No./ Lab I.D.
1																					
2																					
3																					
4																					
5																					
6																					
7																					
8																					
9																					
10																					
11																					
12																					

ADDITIONAL COMMENTS	RELINQUISHED BY / AFFILIATION	DATE	TIME	ACCEPTED BY / AFFILIATION	DATE	TIME	SAMPLE CONDITIONS		
							Temp in °C	Received on Ice (Y/N)	Custody Sealed Cooler (Y/N)	Samples Intact (Y/N)

SAMPLER NAME AND SIGNATURE
PRINT Name of SAMPLER:
SIGNATURE of SAMPLER: DATE Signed (MM/DD/YY):

ATTACHMENT VIII
METHOD HOLD TIME, CONTAINER AND PRESERVATION GUIDE

PASI – MINNESOTA

Parameter	Matrix	Container	Preservative	Max Hold Time
2, 3, 7, 8-TCDD	Soil	8 oz Glass Jar		90/40 Days
2, 3, 7, 8-TCDD	Water	1 L glass		90/40 Days
Acidity	Water	250 mL Plastic		14 Days
Alkalinity	Water	250 mL Plastic		14 Days
Alpha Emitting Radium Isotopes	Water	1L glass	HNO_3	180 days
Anions by IC, including Br, Cl, F, NO_2, NO_3, SO_4	Water	250 mL plastic		Br, Cl, F, SO_4 (28 Days) NO_2, NO_3 (48 Hours)
Aromatic and Halogenated Volatiles	Soil	5035 vial kit		14 days
Aromatic and Halogenated Volatiles	Water	3 40 mL glass	HCl, $Na_2S_2O_3$	14 Days
Bacteria, Total Plate Count	Water	100 mL Plastic	$Na_2S_2O_3$	24 Hours
Base/Neutrals and Acids	Soil	8 oz Glass Jar		14/40 Days
Base/Neutrals and Acids	Water	1 L glass	HCl, $Na_2S_2O_3$	7/40 Days
Base/Neutrals, Acids & Pesticides	Water	1 L glass	HCl, $Na_2S_2O_3$	7/30 Days
BOD/cBOD	Water	500 mL Plastic		48 hours
BTEX/Total Hydrocarbons	Air	Summa Canister		14 Days
BTEX/Total Hydrocarbons	Air	Tedlar Bag		48 Hours
CARB 429 (HRMS PAH)	Water	1 Liter		1 Year to Extraction*
CARB 429 (HRMS PAH)	Solid	4 or 8 oz. Jar		1 Year to Extraction*
CARB 429 (HRMS PAH)	Tissue	4 or 8 oz. Jar		1 Year to Extraction*
Chloride	Water	250 mL Plastic		28 Days
Chlorinated Herbicides	Soil	8 oz Glass Jar		14/40 Days
Chlorinated Herbicides	Water	1 L glass	HCl, $Na_2S_2O_3$	14/28 Days
Chorine, Residual	Water	500 mL plastic		Analyze within 15 minutes
COD	Water	250 mL plastic	H_2SO_4	28 Days
Color	Water	250 plastic		48 Hours
Condensable Particulate Emissions	Air	Solutions		6 Months
Cyanide, Reactive	Water	250 mL plastic		28 Days
Cyanide, Total and Amenable	Water	250 mL plastic	NaOH	14 Days, 24 Hours if Sulfide present
Diesel Range Organics	Soil	8 oz Glass Jar		14/40 Days
Diesel Range Organics	Water	1L glass		7/40 Days
Dioxins & Furans	Air	PUF		30/45 Days
EDB & DBCP	Water	1 L glass	HCl, $Na_2S_2O_3$	14 Days
Explosives	Water	1 L glass		7/40 Days
Explosives	Soil	8 oz Glass Jar		14/40 Days
Coliform, Fecal SM9221D	Water	100mL	10% sodium thiosulfate	6 hours
Coliform, Total SM9223B	Water	100mL	10% sodium thiosulfate	24 hours
Ferrous Iron	Water	250 mL plastic		Immediate
Flashpoint/Ignitability	Water	250 mL plastic		28 Days
Fluoride	Water	500 mL plastic		28 Days
Gamma Emitting Radionuclides	Water	1 L glass	HNO_3	180 days
Gas Range Organics	Water	40 mL glass	HCl	14 Days
Gasoline Range Organics	Soil	5035 vial kit		14 days
Gross Alpha (NJ 48Hr Method)	Water	1L glass	HNO_3	48 Hrs
Gross Alpha and Gross Beta	Water	1L glass	HNO_3	180 days
Haloacetic Acids	Water	40 mL glass	NH_4Cl	14/7 Days
Hardness, Total ($CaCO_3$)	Water	250 mL plastic	HNO_3	6 Months
Hexavalent Chromium	Water	250 mL plastic		24 Hours
Hydrogen Halide & Halogen Emissions	Air	Solutions		6 Months
Lead Emissions	Air	Filter/Solutions		6 Months
Low Level Mercury	Water	Glass	BrCl	90 days (if preserved and oxidized)
Mercury	Soil	8 oz Glass Jar		28 days
Mercury	Water	250 mL plastic	HNO_3	28 Days
Metals	Air	Filters		6 Months
Metals	Soil	8 oz Glass Jar		6 months
Metals (and other ICP elements)	Water	250 mL plastic	HNO_3	6 Months
Methane, Ethane, & Ethene	Water	20 mL glass	HCl	14 Days
Methane, Ethane, Ethene	Air	Summa Canister		14 Days

Parameter	Matrix	Container	Preservative	Max Hold Time
Methane, Ethane, Ethene	Air	Tedlar Bag		48 Hours
Method 23/TO9	Air	Sampling Head		30 Days to Extraction*
Method 1631E	Water	500mL Glass	Performed in the lab	Oxidized in bottle within 28 days.
Nitrogen, Ammonia	Water	500 mL plastic	H_2SO_4	28 Days
Nitrogen, Kjeldahl	Water	1 L plastic	H_2SO_4	28 Days
Nitrogen, Nitrate	Water	250 mL plastic		48 Hours
Nitrogen, Nitrate & Nitrite	Water	250 mL plastic	H_2SO_4	28 Days
Nitrogen, Nitrite	Water	250 mL plastic		48 Hours
Nitrogen, Organic	Water	250 mL plastic	H_2SO_4	28 Days
Non-Methane Organics	Air	Summa Canister		14 Days
Non-Methane Organics	Air	Tedlar Bag		48 Hours
Odor	Water	1 L glass		24 Hours
Oil and Grease/HEM	Water	1 L glass	H_2SO_4	28 Days
Organchlorine Pesticides and PCB's	Water	1 L glass	HCl, $Na_2S_2O_3$	7/40 Days
Organochlorine Pesticides & PCBs	Air	PUF		7/40 Days
Organochlorine Pesticides and PCB's	Water	1 L glass	HCl, $Na_2S_2O_3$	7/40 Days
Organochlorine Pesticides and PCBs	Soil	8 oz Glass Jar		14/40 Days
Organophosphorous Pesticides	Soil	8 oz Glass Jar		14/40 Days
Organophosphorous Pesticides	Water	1 L glass	HCl, $Na_2S_2O_3$	7/40 Days
Oxygen, Dissolved (Probe)	Water	500 mL plastic		Analyze within 15 minutes
Paint Filter Liquid Test	Water	250 mL plastic		N/A
Particulates	Air	Filters		6 Months
Permanent Gases	Air	Summa Canister		14 Days
Permanent Gases	Air	Tedlar Bag		48 Hours
pH	Water	250 mL plastic		Analyze within 15 minutes
Phenol, Total	Water	1L glass	H_2SO_4	28 Days
Phosphorus, Orthophosphate	Water	250 mL plastic		Filter within 15 minutes, Analyze within 48 Hours
Phosphorus, Total	Water	250 mL plastic	H_2SO_4	28 Days
Polynuclear Aromatic Hydrocarbons	Air	PUF		7/40 Days
Polynuclear Aromatic Hydrocarbons	Soil	8 oz Glass Jar		14/40 Days
Polynuclear Aromatic Hydrocarbons	Water	1L glass	HCl, $Na_2S_2O_3$	7/40 Days
Radioactive Strontium	Water	1L glass	HNO_3	180 days
Radium-226 Radon Emanation Technique	Water	1L glass	HNO_3	180 days
Radium-228	Water	1L glass	HNO_3	180 days
Silica, Dissolved	Water	250 mL plastic		28 Days
Solids, Settleable	Water	1L plastic		48 Hours
Solids, Total	Water	1L plastic		7 Days
Solids, Total Dissolved	Water	1L plastic		7 Days
Solids, Total Suspended	Water	1L plastic		7 Days
Solids, Total Volatile	Water	1L plastic		7 Days
Specific Conductance	Water	250 mL plastic		28 Days
Stationary Source Dioxins & Furans	Air	XAD Trap		30/45 Days
Stationary Source Mercury	Air	Filters		6 Months, 28 Days for Hg
Stationary Source Metals	Air	Filters		6 Months, 28 Days for Hg
Stationary Source PM10	Air	Filters		6 Months
Stationary Source Particulates	Air	Filter/Solutions		6 Months
Sulfate	Water	250 mL plastic		28 Days
Sulfide, Reactive	Water	250 mL plastic		28 Days
Sulfide, Total	Water	500 mL plastic	NaOH,ZnOAc	7 Days
Sulfite	Water	500 mL plastic		Analyze within 15 minutes
Surfactants	Water	250 mL plastic		48 Hours
Total Organic Carbon (TOC)	Water	250 mL glass	H_2SO_4 or HCl	28 Days
Total Organic Halogen (TOX)	Water	500 mL glass		14 Days
Tritium	Water	1L glass	HNO_3	180 days
Turbidity	Water	250 mL plastic		48 Hours
Uranium Radiochemical Method	Water	1L glass	HNO_3	180 days
Volatiles	Air	Summa Canister		28 Days (14 Days for MN)
Volatiles	Air	Tedlar Bag		48 Hours
Volatiles	Soil	5035 vial kit		14 days
Volatiles	Water	3 40 mL glass	HCl, $Na_2S_2O_3$	14 Days
Volatiles	Water	3 40 mL glass		7 unpreserved
WIGRO	Water	3 40 ml vials	HCl	14 Days
WIGRO	Solid	5035 vial kit	See *Note*	14 Days

Parameter	Matrix	Container	Preservative	Max Hold Time
WIDRO	Water	1 Liter	HCl	7 Days to Extraction*
WIDRO	Solid	Tared 4 oz. Jar		14 Days to extraction*
1614	Water	1 Liter		1 Year to Extraction*
1614	Solid	4 or 8 oz. Jar		1 Year to Extraction*
1614	Tissue	4 or 8 oz. Jar		1 Year to Extraction*
1653	Water	2 L	pH<2 H_2SO_4	30 Days to Extraction; 30 days to analysis
1668	Water	1 Liter		1 Year to Extraction*
1668	Solid	4 or 8 oz. Jar		1 Year to Extraction*
1668	Tissue	4 or 8 oz. Jar		1 Year to Extraction*
8015 (MeOH, Eoh)	Water	3 40 ml vials	HCl	14 Days
8280	Water	1 Liter		30 Days to Extraction*
8280	Solid	4 or 8 oz. Jar		30 Days to Extraction*
8290	Solid	4 or 8 oz. Jar		30 Days to Extraction*
8290	Water	1 Liter		30 Days to Extraction*
8290	Waste	2 oz		30 Days to Extraction*

40 Days from Extraction to Analysis. (EPA 1613,WI DRO)
45 Days from Extraction to Analysis (SW8290, 1668, 8280 and Method 23/TO9)
Note: 5035 kit contains 2 vials water, preserved by freezing or 2 vials aqueous $NaHSO_4$ preserved at 4^oC and 1 vial MeOH preserved at 4^oC and 1 vial unpreserved at 4^oC.

Pace Analytical Services, Inc.
1700 Elm Street, Suite 200
Minneapolis, MN 55414

Phone: 612.607.1700
Fax: 612.607.6444

STANDARD OPERATING PROCEDURE

SAMPLE MANAGEMENT

Reference Methods: N/A

LOCAL SOP NUMBER:	S-MN-C-001-Rev.00
EFFECTIVE DATE:	08-Nov-2007
SUPERSEDES:	All-C-001-Rev.1
SOP TEMPLATE NUMBER:	SOT-ALL-C-001-Rev.00

LOCAL APPROVAL

Laboratory General Manager	08NOV2007 Date
Laboratory Quality Manager	08Nov2007 Date
Department Manager	07Nov2007 Date

ANNUAL REVIEW

SIGNATURES BELOW INDICATE NO CHANGES HAVE BEEN MADE SINCE APPROVAL. SOP IS VALID FOR ONE YEAR FROM DATE OF LAST SIGNATURE.

Signature	Title	Date
Signature	Title	Date
Signature	Title	Date

© 2002 - 2007 Pace Analytical Services, Inc. This Standard Operating Procedure may not be reproduced, in part or in full, without written consent of Pace Analytical Services, Inc. Whether distributed internally or as a "courtesy copy" to clients or regulatory agencies, this document is considered confidential and proprietary information.

Any printed documents in use within a Pace Analytical Services, Inc. laboratory have been reviewed and approved by the persons listed on the cover page. They can only be deemed official if proper signatures are present.

This is **COPY#** 8 distributed on 14March2008 by CAN and is _____**CONTROLLED or** X **UNCONTROLLED.**

TABLE OF CONTENTS

SECTION	PAGE
1. Purpose	1
2. Scope and Application	1
3. Summary of Method	1
4. Interferences	1
5. Safety	2
6. Definitions	2
7. Responsibilities and Distribution	3
8. Sample Collection, Preservation, and Handling	4
9. Equipment and Supplies	4
10. Reagents and Standards	5
11. Calibration	5
12. Procedure	5
13. Quality Control	10
14. Method Performance	10
15. Pollution Prevention and Waste Management	11
16. References	11
17. Tables, Diagrams, Flowcharts, Attachments, Appendices, etc.	11
18. Revisions	12
Attachment I – Example COC Form	13
Attachment II – Example SCURF	14
Attachment III – Example SRF	15
Attachment IV – Method Hold Times	16

1. Purpose

The purpose of this Standard Operating Procedure (SOP) is to outline the procedures involved with the receipt, login and staging for samples received by Pace Analytical Services, Inc, MN.

2. Scope and Application

2.1. The policies and procedures contained in this SOP apply to all personnel involved in the receipt, login, analysis, disposal and transfer of samples.

2.2. A sample acceptance policy is contained within the Procedure section that outlines guidelines for acceptable sample conditions. Any deviation from these guidelines requires detailed documentation within the report, usually as a footnote, or on the chain-of-custody, or SCURF and may require client contact.

3. Summary of Method

3.1. Samples are delivered to the laboratory via several delivery mechanisms. Samples received are checked for adherence to the Sample Acceptance Policy with any discrepancies noted. Discrepancies are communicated to the client for their acknowledgement.

3.2. The Laboratory Information Management System (LIMS, EpicPro) assigns all samples with a unique sample number and manages the analyses assigned to each.

3.3. Samples are labeled with the appropriate information and staged in refrigerated sample storage coolers if temperature preservation is required or on open shelves for samples not requiring sub-ambient temperature preservation. Samples will remain under these conditions until prepared and / or analyzed.

3.4. Samples and associated sub-samples (digestates, extracts, etc.), with the exception of Air cans, are maintained for 30 days after the final report is issued unless otherwise requested by the client or other regulatory agency.

3.5. Samples are disposed of in accordance with local laboratory regulatory requirements and the laboratory's waste handling procedures.

4. Interferences

4.1. Samples may be prone to cross contamination from others within the same delivery group or from other client projects. The sample receiving personnel must ensure that no cross contamination occurs.

4.2. Preservation checks are one of the most likely situations where cross contamination may occur. Materials used in the process must be specific to each sample and may not used for multiple samples.

4.3. Samples are stored under specific conditions and in specific locations, typically by container type. However, consideration must be given to samples that are uniquely different from others. Samples that are anticipated to be severely contaminated should be segregated from others in anticipation that the high levels of contaminants may cross contaminate others in close proximity.

5. Safety

5.1. Hazards and Precautions - Use extreme caution in handling samples and wastes as they may be hazardous. Each reagent and chemical used in this method should be treated as a potential health hazard. Reduce exposure by the use of gloves, lab coats, safety glasses and ventilation hoods. Material Safety Data Sheets (MSDS) are on file and available to all personnel.

5.2. All personnel involved in sample management are responsible for complying with OSHA and DOT regulations. These regulations pertain to the safe handling and/or shipping of the chemicals specified in this procedure. A reference file of Material Safety Data Sheets (MSDS) is available to all personnel. Refer to the Sample Control Supervisor for any questions or concerns related to the safe handling and shipment of hazardous materials.

5.3. Other laboratory safety requirements are contained in the Chemical Hygiene Plan/ Safety Manual. Immediate questions can also be addressed with the local Health and Safety Officer.

6. Definitions

6.1. Definitions of terms found in this SOP can also be found in the Pace Quality Manual. When definitions are not consistent with NELAC defined terms, an explanation is provided in this SOP or the Pace Analytical Services' Quality Manual Glossary.

6.2. **LIMS - Laboratory Information Management System:** a computer system used to manage the flow and traceability of environmental samples and associated data within the laboratory.

6.3. **NELAC - National Environmental Laboratory Accreditation Conference:** a national laboratory-accrediting agency.

6.4. **MSDS - Material Safety Data Sheet:** contains information on chemicals used in the laboratory.

6.5. **COC - Chain-of-Custody:** a form used to record the field identification of samples collected, analyses requested, date and time of collection, sample preservation used, and traceability of samples from time of collection until delivery to the laboratory. This is a legal document.

6.6. **SCURF - Sample Condition Upon Receipt Form:** a form used to record the condition of samples received in the laboratory.

6.7. **Matrix:** the bulk characteristics of a sample. See Table 6.1.

6.8. **SRF – Sample Receipt Form:** form generated by LIMS system after a project is logged in. Contains sample and project information.

6.9. **UN Number** - identification numbers preceded by the letters UN are associated with proper shipping names considered appropriate for international and domestic transportation. These shipping names along with the identification numbers are located in the Federal Register (49CFR172.101).

6.10. **Sample Custody:** a sample is considered to be in someone's custody if:

6.10.1. It is in one's physical possession.

6.10.2. It is in someone's view, after being in someone's physical possession.

6.10.3. It is kept in a secured area, restricted to authorized personnel only.

Table 6.1

NELAC defined matrix	Pace Analytical defined matrix
Aqueous: any liquid sample not defined as drinking water or saline. Includes surface water, groundwater, effluents, TCLP and other extracts.	Waters: includes groundwater, wastewaters, drinking waters, effluents, and any free-flowing liquids.
Drinking water: any aqueous sample that has been designated as potable or potentially potable.	Not assigned as a separate matrix, but samples are assigned to drinking water methods.
Saline/Estuarine: any aqueous sample from an ocean, estuary or other salt water source	Not assigned as a separate matrix from waters.
Non-aqueous liquid: any organic liquid with <15% settleable solids.	Other: Not assigned as a separate matrix from waters.
Biological tissue: any sample from a biological origin such as fish tissue or plant material.	Tissue: would include tissue and plant samples.
Solids: includes soils, sediments, sludges and other matrices with >15% settleable solids	Soils: includes soils, sediments, sludges; other solid materials such as wood, metal, etc. may fall under another heading.
Chemical waste: a product or by product of an industrial process that results in a matrix not defined above.	Oil: includes any non-solid material not classified as waters.
Air: vapor samples including those contained within sorbent tubes, filters or other devices.	Air: vapor samples including those contained within sorbent tubes, filters, or other devices.
No corresponding matrix to wipe; wipes would be included in with solids.	Wipe: includes wipe samples or swabs taken to check for surface contamination.

7. Responsibilities and Distribution

7.1. Corporate Officers

7.1.1. **Chief Operating Officer (COO)** – The COO has oversight responsibility for Pace Analytical environmental laboratory operations, including compliance with all quality system requirements.

7.1.2. **Director of QST** – The Director of Quality, Safety, and Training has oversight responsibility for PASI's quality programs, including establishing and monitoring compliance with all quality system requirements.

7.1.3. **Corporate Quality Office** - It is the responsibility of the Corporate QA Office and/or designee to ensure that all new and revised company-wide documents are distributed to QA Offices at each PASI facility, that an original document is maintained on file and that distribution records are updated accordingly. Staff must be informed of new or revised document distribution through written notification.

7.1.4. **The Corporate QM** or designee Office is responsible for assisting with edits when requested by management, ensuring the electronic version of the document is available in an appropriate shared directory as password protected, appropriately stamping and filing hardcopies, and updating the document tracking system.

7.1.5. This SOP will be reviewed whenever there are procedural changes or every year at a minimum, and any required revisions will be incorporated. The Corporate QM is responsible for ensuring that all revisions to this SOP are implemented and for maintaining the original and complete distribution records.

7.2. **General Manager (GM)**

The General Manager is responsible for ensuring adherence to this SOP and for reporting any required revisions to the local Quality Assurance Office.

7.3. **Quality Manager (QM)**

The QM or designee is responsible for ensuring that all revisions to the SOP are implemented and for maintaining the original and complete distribution records at a local level.

7.4. **Department Manager/Supervisor**

The Department Manager/Supervisor is responsible for ensuring all staff members are reading, following, and adequately trained in the use of this SOP. The department manager/supervisor will make recommendations for SOP revisions to the QM in writing.

7.5. **Staff Members**

Individual staff members are responsible for adherence to the specific policies and procedures contained in this SOP. Individual staff members will only use a signed, controlled copy of this SOP. A controlled copy will be available for review and consultation within the Laboratory work area and Quality Assurance department. Personnel are responsible for ensuring that any deviations to this SOP are reported to management. Each person may make recommendations in writing to their manager/supervisor for revising this SOP as the need arises.

7.6. **Project Managers**

The Project Managers are responsible for creating, providing and/or entering the correct project information for proper login into the LIMS system. They may assist in logging projects into LIMS, printing sample labels, and sample receipt forms (SRFs). They are responsible for notifying the client of sample receipt discrepancies and resolving any outstanding issues.

8. Sample Collection, Preservation, and Handling

8.1. Acceptable sample preservation, containers, and hold times are located in Pace Analytical Services' Quality Manual, the laboratory's method SOP or in the applicable test method. Samples are stored separately from all standards and reagents and any known highly contaminated samples.

NOTE: To avoid contamination, no food or drink products can be located near the areas where samples are unpacked, labeled, or staged.

8.2. Sample Storage – See Section 12.3 for general storage guidelines.

9. Equipment and Supplies

Table 9.1

Equipment/Supplies	Description/ Comments
Sample Labels	
Thermometers	Infrared, digital, NIST traceable
Sample storage cooling units	Capable of holding required storage temperatures
Chain-of-Custody forms	
Sample Condition Upon Receipt Form (SCURF)	
pH Paper	
Label Printer	
LIMS computer system	EPIC Pro
Disposable pipettes	
Sample containers	C&G

10. Reagents and Standards

10.1. All reagents used in this procedure must be labeled with:

- Laboratory reagent identification number
- Unless otherwise noted, the name and concentration of the reagent
- Date the reagent was received, opened and, as needed, prepared
- Person preparing reagent
- Expiration date

10.2. **Reagents**

Table 10.1 – Sample Preservation Reagents

Reagent	Formula	Concentration
Sulfuric Acid	H_2SO_4	1+1
Nitric Acid	HNO_3	1+1
Hydrochloric Acid	HCl	1+1
Sodium Hydroxide	NaOH	50% or Pellets
Sodium Thiosulfate	$Na_2S2O_3 \cdot 5H_2O$	
Zinc Acetate Solution (for sulfide)		
Methanol	MeOH	Purge and Trap Grade
Ascorbic Acid (for cyanide)		
Sodium Bisulfate		

10.3. For acids, bases and other reagents obtained from other laboratory departments, this information is located in the department reagent preparation log. In the event that these reagents are managed within the Sample Receiving group, the department must maintain its own reagent preparation log.

11. Calibration

11.1. Thermometers, IR-Guns, and other equipment used for measuring temperatures must be calibrated according to S-ALL-Q-013, *Support Equipment*.

12. Procedure

12.1. **Sample Receipt**

12.1.1. The laboratory receives client samples via three major methods: mail/commercial delivery service, Pace Analytical courier/field services and hand delivery.

12.1.2. The chain of custody (COC) (see Attachment I) is signed immediately upon receipt of the samples from the client. If the client drops off the samples or they are picked up by the Pace courier, a copy of the signed COC is given to the client at that time. If samples are received via commercial carrier or mail delivery, the COC should be signed immediately when the cooler or package is opened and ultimately placed in the project file.

12.1.3. Sample receiving personnel should review the COC for any evidence of rush turnaround requests and analyses with short hold times. Projects that fall under these conditions should be given immediate attention. The project manager responsible for that client should be alerted in the event that they have not already alerted the laboratory to the project as it may be possible that the client did not pre-schedule the project. Once the sample(s) are received and logged into the LIMS, the sample technician and project manager will coordinate the notification and delivery of samples to the laboratory.

12.1.4. **Sample Acceptance Policy** - This section constitutes the laboratory's sample acceptance policy. Copies of this policy should be provided, in the form of a letter, fax or e-mail to each client or sampler, as necessary. Samples are considered acceptable if they meet the following criteria:

- There is proper, full, and complete documentation (i.e. chain-of-custody) including:
  - Unique client sample identification. Sample containers are labeled using unique client sample identifications (traceable to the chain-of-custody or other documentation) on durable, waterproof labels or equivalent.
  - Location of sampling (site), time and date of sample collection;
  - Sampler's name and signature;
  - Preservative used (if any);
  - Sample type (matrix);
  - Requested analyses;
  - Any special analysis requirements
- Appropriate sample containers have been used.
- Holding times have not been exceeded upon receipt (holding times are available in Attachment IV). If they have been exceeded, client permission to proceed is required.
- Adequate sample volume has been received for all tests requested (if not, client permission to proceed is required). For data packages requiring quality control samples to be analyzed on client specific samples, the client must include enough sample to complete the QC samples as well.
- When there is insufficient sample to complete the QC samples and the client does not wish to send more sample or more sample cannot be obtained because of sample volume available or holding time issues, the lack of appropriate volume or weight is noted as a sample acceptance policy deviation on the final report. Batch quality control samples will be used in place of project-specific quality control samples.
- Samples that require sub-ambient thermal preservation are considered acceptable if they are within +/- 2.0 °C of the required temperature (for samples needing to be at 4.0 °C, the acceptable range is just above freezing to 6.0 °C, as defined by NELAC). The sample cooler (ice chest) temperature is recorded directly on the COC. Samples received outside of this criterion must have a notation on the COC and/or on the Sample Condition Upon Receipt Form (SCURF) indicating that the temperature was outside of criteria.
- Samples that are delivered to the lab immediately after collection are considered acceptable if there is evidence (i.e. samples arrive packed with ice) that the chilling process has been begun. If samples arrive at temperatures that are outside these requirements, the client will be notified and analysis will NOT proceed unless otherwise directed by the client. Data will be appropriately qualified.

12.1.5. Open the cooler and verify the temperature of the samples by taking the temperature of the temperature blank (TempB). If there is no TempB in the cooler, measure the temperature of two to five representative sample bottles using the infrared (IR) thermometer gun. A representative sample will reflect an "average" condition of the samples in the cooler and, depending on the manner in which they are packed, may not necessarily be in direct contact with the cooling material.

NOTE: If an IR gun is used, the temperature should be taken from an opaque surface such as the bottle label. Measurements taken through a transparent surface (clear or amber glass) may not be unreliable and should incorporate a specific temperature correction factor for that surface reading.

12.1.6 Record the temperature on the COC (example in Attachment I) and/or SCURF (example in Attachment II). If multiple containers are used, record the average temperature of those measured. In addition, record the type and of the "ice" used for packing the cooler (i.e. wet ice, "blue ice", gel packs, etc.)

12.1.7 If samples within a project are spread over multiple coolers and one or more of the coolers is outside of the temperature criteria, the cooler must be inventoried and to determine which samples and sample containers are affected by the out of control condition. Affected samples are marked with a red sticker. Record these inventories on the SCURF, using the back side of the page as necessary.

- If the temperature blank is received frozen, check all associated samples to confirm if everything received is frozen. If not, check representative samples according to 12.1.5. Record all observations on the SCURF.

12.1.8 Unpack the cooler and chain of custody (COC). Organize the samples, grouped by client sample ID, according to the order on the COC. Review COC against samples to make sure the bottles received match the analysis requested. All anomalies must be recorded on the SCURF.

12.1.9 Discard any ice or water that remains in the cooler and the packing material used to secure the samples. Water or ice should be discarded down a drain that connects to the local sewer. Packing materials should be placed in the garbage. If a sample container was broken, the contents remaining in the cooler MUST be discarded in a manner consistent with the hazardous waste handling standard operating procedure.

12.1.10 **pH Verification Instructions**

- The pH of the sample must be verified on all preserved sample bottles requiring pH preservation (see exceptions below).
- Open each preserved bottle (except as noted below). Use a new disposable pipette, a stirring bar or another inert utensil to withdraw a small portion of the sample. Dispense the aliquot on a sample specific narrow-range pH strip and check the pH.

  NOTE: Do not check the pH of samples for coliform, volatiles, TOC, WI-DRO, oil and grease, or hexane extractables (method 1664). These analyses will be checked by the analyst at the bench and should not be opened by sample management personnel

Table 12.1 – General pH Preservation Requirements by Preservative

Sample Preservatives	Sample pH Requirement
HCl	must be less than 2
HN03	must be less than 2
H2SO4	must be less than 2
NaOH	must be greater than 12
ZnAcetate & NaOH	must be greater than 9

- If the pH is not within the required range, indicate the anomaly on the SCURF form or on the COC. If all bottles are unpreserved for a sample, write N/A in the section of the SCURF.

12.1.11 **pH Preservation Adjustments**

- If preserved bottle does not meet the preservation requirement the pH of the bottle must be recording on the SCURF or COC, additional sample preservative should be added so that the preservative is 1% of the sample container volume. The sample should be mixed and the pH taken. The new pH reading should also be recorded on the SCURF along with the amount, type and lot number of the preservative added. In addition, the sample container should be marked with the Preservative added, volume, date, time, and intial of the person who added the preservative

12.1.12 **Total Residual Chlorine Verification Instructions -** Total residual chlorine must be verified at the time of receipt or at the bench as required by the method or individual state regulatory agency for certain analyses (see Table 12.2). Do not check the sample bottles for those analyses listed in 12.1.8.

NOTE: This check is done by the extraction laboratories for each test.

Table 12.2 – Analyses requiring Residual Chlorine Verification

Analyses
Ammonia (NH3)
Nitrate (NO3)
Biochemical Oxygen Demand (BOD)
1653 Chlorinated Phenolics
1613 Dioxin
1614 PBDE
1668 PCB

12.1.13 Note any discrepancies pertaining to samples as defined by the sample acceptance policy detailed above on the COC or SCURF. Any discrepancies involving temperature, preservation, hold time, collection dates and times, sample volume, sample containers, and unclear analysis, must be reported to project management as soon as possible.

12.1.14 For short hold samples, the laboratory is notified and the samples are staged per 12.3.

Table 12.3 – Analyses with Hold Times Less Than 72 Hours

Short Hold Time	Analyses	Details
ASAP	Field Parameters	pH, Dissolved Oxygen
6 Hours	Total / Fecal Coliform (MPN, MF)	
24 Hours	Hexavalent Chromium	Aqueous Samples Only
30 Hours	Total Coliform (Presence / Absence)	
48 Hours	Color	
48 Hours	MBAS	
48 Hours	Nitrate (unpreserved)	If Preserved, reported as NO3+NO2
48 Hours	Nitrite (unpreserved)	If Preserved, reported as NO3+NO2
48 Hours	Ortho –phosphate	
48 Hours	Settable Solids	
48 Hours	Turbidity	
48 Hours	VOA - Soils by Unpreserved EPA5035	Jars, Encores, Sleeves
48 Hours	Air Analysis	All air samples collected in Tedlar
72 Hours	3030C Metals	

12.2 Sample Login

12.2.1 Rush projects and/or project with short holds should be logged in first. After these projects have been addressed, projects should be addressed on a first in, first out basis.

12.2.2 Enter samples in LIMS System according to T-ALL-IT-005.

12.2.3 Generate sample labels and Sample Receipt Form (SRF) (see Attachment III).

- See T-All-IT-005.

12.2.4 Attach the sample labels to the appropriate sample bottles.

- Place labels so that the client sample ID is still visible. If Client sample ID does not match COC, any inconsistencies must be listed on the SCURF and an additional label should be placed on each sample container indicating the sample ID does not match the COC.

12.2.5 The project manager must review and verify the following information by comparing the COC to SRF. Some of this information may not be provided by the client and those fields should be left blank.

- Report Recipient
- Invoice Recipient
- Additional Report Recipient
- PO#
- Project Name
- Project Number
- Requested Due Date
- Sample ID
- Matrix
- Collection Date & Time
- Received Date & Time
- Analysis: Double check compound lists
- Price
- Region Codes
- Work Region % Split (for Pace internal subcontracted work)
- Has Subbed Work been shipped

12.2.6 If any samples require analyses performed outside of the laboratory, prepare the samples for subcontracting according to the procedures listed in the SOP describing the subcontracting of analytical services S-MN-C-004-Rev.00.

12.3 Sample Storage

12.3.1 While awaiting login on the day received, samples may remain in the shipping cooler as received prior to login. Once unpacked, samples will be logged in to the LIMS in a timely manner and returned to appropriate storage conditions as soon as possible. For the exceptional case where samples are not logged in the day they were received, they must be stored under appropriate temperature controlled conditions until login takes place.

12.3.2 Once logged into the LIMS and labeled, the environmental samples are placed in the appropriate storage areas. Specific temperature requirements are outlined in the analytical methods, but general guidelines are outlined below:

- Volatiles: Stored by receiving date or project number in a segregated volatiles cooler.

- Soils and Other Solids: Staged by receiving date or project number on the shelves in the appropriate sample storage cooler. Any solid/soil samples for metals analyses are also staged here.
- Waters and Other Liquids (non-Metals, except Hg): Staged by receiving date or project number on the shelves in the appropriate sample storage cooler.
- Solids and Liquids - Metals Analyses (except Hg): Waters and liquids are staged by receiving date or project number on designated shelving in the main laboratory or appropriate designated area. These samples may be stored at ambient temperature.
- Short hold samples are placed in the short hold storage area or delivered directly to the laboratory.
- Biological tissue samples are staged by receiving date or project number on shelves in a freezer.
- Air bags/ summa canisters – insert storage conditions

12.4 Disposal of Unconsumed Samples

Refer to the laboratory standard operating procedure for waste handling and disposal, *ALL-S-002.*

13. Quality Control

13.1. For any sample received at the laboratory that does not meet the sample acceptance, hold time or preservation criteria, the client must be contacted by project management and advised of the situation.

13.1.1. If the client instructs the laboratory to proceed with the analysis, all appropriate personnel/departments must be informed and the client approval must be documented. Data will be appropriately qualified.

13.1.2. The client may also instruct the laboratory to preserve the samples at the laboratory prior to proceeding with analysis. This must be documented on the COC or the SCURF, and should be noted in the final laboratory report.

13.2. All supporting documentation related to sample custody must be retained by the laboratory. This includes; memorandums, fax transmissions, all paperwork received with the COC and copies of email transmissions.

13.3. **Documenting Discrepancies during receipt of samples.**

13.3.1. The following are examples of client discrepancies that need to be documented on the appropriate paperwork (SCURF).

- Lost samples/insufficient sample volume
- Broken or missing bottle
- Missing COC
- Mislabeled bottle
- Preservation error
- Missing sample related details (date, time, sample type)

13.3.2. Pace sample management discrepancies will be documented on the COC or within the project files. Discrepancies attributable to errors and omissions on the part of the laboratory will be addressed and resolved through the formal corrective action process.

14. Method Performance

14.1. Not Applicable

15. Pollution Prevention and Waste Management

15.1. In order to minimize the amount of waste generated during this procedure, analyst should prepare reagents in an amount that may be used in a reasonable amount of time (i.e. before a reagent expires).

15.2. The Chemical Hygiene Plan/Health and Safety Plan contain additional information on pollution prevention.

15.3 The Environmental Protection Agency (USEPA) requires that laboratory waste management practice be consistent with all applicable rules and regulations. Excess reagents, samples and method process wastes are characterized and disposed of in an acceptable manner. For further information on waste management consult SOP ALL-S-002, or equivalent replacement.

16. References

16.1. Chapter 6, "Sampling Procedures;" Quality Manual - Quality Assurance/Quality Control Policies and Procedures, Pace Analytical Services, Inc., Current revision.

16.2. Chapter 3, "Inorganic Analytes;"SW-846, Test Methods for Evaluating Solid Waste Physical/Chemical Methods, USEPA, Rev. 3, 1996.

16.3. Code of Federal Regulations, Chapter 40, Part 136.3, Table II

16.4. From section 5.11.3.a.1 Sample Receipt Protocols

16.4.1. NELAC Program Policy and Structure.

16.4.2. National Environmental Laboratory Accreditation Conference (NELAC), Chapter 5. July 1, 2001, Revision 14, Program Policy and Structure.

16.5. American Public Health Association, American Water Works Association, and Water Pollution Control Federation, 1995, Standard Methods for the Examination of Water and Wastewater, A.E. Greenberg, L.W. Clesceri, A.D. Eaton and M.A.H. Franson, eds., 19th ed., American Public Health Association, Washington D. C.

16.6. U.S. Environmental Protection Agency, 1983, Methods for Chemical Analysis of Water And Wastes, EPA-600/4-79-020, Environmental Monitoring and Support Laboratory, Cincinnati, Ohio.

16.7. U.S. Environmental Protection Agency, 1996, Test Methods for Evaluating Solid Waste, SW-846, 3rd Edition, Office of Solid Waste and Emergency Response, Washington D.C.

16.8. U.S. Environmental Protection Agency, 1988, Methods for Determination of Organic Compounds in Drinking Water, EPA/600/4-88/039, Environmental Monitoring Systems Laboratory, Cincinnati, Ohio.

17. Tables, Diagrams, Flowcharts, Attachments, Appendices, etc.

17.1. Attachment I – Chain of Custody, Form # FALLQ020

17.2. Attachment II – Sample Condition Upon Receipt Form, Form # FALLC002

17.3. Attachment III – Sample Receipt Form (SRF), example

17.4. Attachment IV – Method Hold Times

18. Revisions

Document Number	Reason for Change	Date
ALL-C-001-rev.0	New	July 12, 2004
ALL-C-001rev.0	Removed information on waste and disposal and referred to ALL-S-002, *Waste Handling* Removed information on subcontracting samples and referred to ALL-C-003, *Subcontracting Samples* Removed information on residual chlorine testing in sample management. Those laboratories that require or perform this test in sample management, will include the information in their local addenda Added a general reference to the type of containers purchased in 9.1.10 Added information on the re-use of returned empty sample containers in section 12.1.4 Added shelf life criteria for trip blanks in 12.1.13 Provided more detail on how to check pH preservation in 12.2.8 Added Attachment I, II, III	March 30, 2005
SOT-ALL-C-001rev.00	Converted to SOP Template Removed bottle order preparation details for conversion to separate SOP Template Updated COC form Updated SCUR form Included requirement to add Bottle Lot #s to the Bottle Order Form Added Attachment IV –Method Hold Times	December 28, 2006
S-MN-C-001-Rev.00	First revision of the corporate template. Added in MN practices throughout the document Residual Chlorine done in extraction labs	06NOV2007

Attachment I – Example COC Form

Example Chain of Custody (COC)

CHAIN-OF-CUSTODY / Analytical Request Document

The Chain-of-Custody is a LEGAL DOCUMENT. All relevant fields must be completed accurately.

Page: of

Section A Required Client Information:	Section B Required Project Information:	Section C Invoice Information:
Company:	Report To:	Attention:
Address:	Copy To:	Company Name:
		Address:
Email To:	Purchase Order No.:	Pace Quote Reference:
Phone: Fax:	Project Name:	Pace Project Manager:
Requested Date/TAT: Due	Project Number:	Pace Profile #:

REGULATORY AGENCY

☐ NPDES ☐ GROUND WATER ☐ DRINKING WATER
☐ UST ☐ RCRA ☐ OTHER_____

SITE LOCATION ☐ GA ☐ IL ☐ N ☐ MI ☐ NC ☐ OH ☐ SC ☐ WI ☐ OTHER____

Requested Analysis Filtered (Y/N)

ITEM #	Section D Required Client Information SAMPLE ID (A-Z, 0-9 / ,-) Sample IDs MUST BE UNIQUE	MATRIX CODE	SAMPLE TYPE G=GRAB C=COMP	COLLECTED COMPOSITE START DATE	COLLECTED COMPOSITE START TIME	COLLECTED COMPOSITE END/GRAB DATE	COLLECTED COMPOSITE END/GRAB TIME	SAMPLE TEMP AT COLLECTION	# OF CONTAINERS Unpreserved	H_2SO_4	HNO_3	HCl	NaOH	$Na_2S_2O_3$	Methanol	Other	Analysis Test ➡ Y/N	Residual Chlorine (Y/N)	Pace Project No. Lab I.D.
1																			
2																			
3																			
4																			
5																			
6																			
7																			
8																			
9																			
10																			
11																			
12																			

Valid Matrix Codes

MATRIX	CODE
DRINKING WATER	DW
WATER	WT
WASTE WATER	WW
PRODUCT	P
SOIL/SOLID	SL
OIL	OL
	WP
	AR
	OT
	TS

ADDITIONAL COMMENTS	RELINQUISHED BY / AFFILIATION	DATE	TIME	ACCEPTED BY / AFFILIATION	DATE	TIME	SAMPLE CONDITIONS			
								Y/N	Y/N	Y/N
								Y/N	Y/N	Y/N
								Y/N	Y/N	Y/N
								Y/N	Y/N	Y/N

SAMPLER NAME AND SIGNATURE		Temp in °C	Received on Ice	Custody Sealed Cooler	Samples Intact
PRINT Name of SAMPLER:					
SIGNATURE of SAMPLER:	DATE Signed (MM / DD / YY):				

Control number: F-ALL-Q-020

Attachment II – Example SCURF

Sample Condition Upon Receipt Form (SCURF) – Example

Contents may change without updating this SOP

Sample Condition Upon Receipt

Pace Analytical

Client Name:_____ Project #_____

Courier: ☐ Fed Ex ☐ UPS ☐ USPS ☐ Client ☐ Commercial ☐ Pace Other_____

Tracking #: _____

Custody Seal on Cooler/Box Present: ☐ yes ☐ no Seals intact: ☐ yes ☐ no

Optional
Proj. Due Date:
Proj. Name:

Packing Material: ☐ Bubble Wrap ☐ Bubble Bags ☐ None ☐ Other_____

Thermometer Used _____ **Type of Ice:** Wet Blue None ☐ Samples on ice, cooling process has begun

Cooler Temperature_____ **Biological Tissue is Frozen:** Yes No

Temp should be above freezing to 6°C

Date and Initials of person examining contents:_____

		Comments:
Chain of Custody Present:	• Yes • No • N/A	1.
Chain of Custody Filled Out:	• Yes • No • N/A	2.
Chain of Custody Relinquished:	• Yes • No • N/A	3.
Sampler Name & Signature on COC:	• Yes • No • N/A	4.
Samples Arrived within Hold Time:	• Yes • No • N/A	5.
Short Hold Time Analysis (<72hr):	• Yes • No • N/A	6.
Rush Turn Around Time Requested:	• Yes • No • N/A	7.
Sufficient Volume:	• Yes • No • N/A	8.
Correct Containers Used:	• Yes • No • N/A	9.
-Pace Containers Used:	• Yes • No • N/A	
Containers Intact:	• Yes • No • N/A	10.
Filtered volume received for Dissolved tests	• Yes • No • N/A	11.
Sample Labels match COC:	• Yes • No • N/A	12.
-Includes date/time/ID/Analysis Matrix:_____		
All containers needing preservation have been checked.	• Yes • No • N/A	13.
All containers needing preservation are found to be in compliance with EPA recommendation.	• Yes • No • N/A	
exceptions: VOA, coliform, TOC, O&G, WI-DRO (water)	• Yes • No	Initial when completed _____ Lot # of added preservative _____
Samples checked for dechlorination:	• Yes • No • N/A	14.
Headspace in VOA Vials (>6mm):	• Yes • No • N/A	15.
Trip Blank Present:	• Yes • No • N/A	16.
Trip Blank Custody Seals Present	• Yes • No • N/A	
Pace Trip Blank Lot # (if purchased):_____		

Client Notification/ Resolution: Field Data Required? Y / N

Person Contacted: _____ Date/Time: _____

Comments/ Resolution: _____

Project Manager Review: _____ **Date:**_____

Note: Whenever there is a discrepancy affecting North Carolina compliance samples, a copy of this form will be sent to the North Carolina DEHNR Certification Office (i.e out of hold, incorrect preservative, out of temp, incorrect containers)

Control number: F-ALL-C-003

Attachment III – Example SRF

Sample Receipt Form (SRF) - example

Pace Analytical Services, Inc.
Minnesota
Sample Receipt Form

Report to Address:

Phone:
FAX:

Line Item Descriptions:
[1] TSS,TDS,COD,BOD,T.Phos.

Client P O No:
Phone: (612)607-6378
Project Manager: Andrea Nemitz
Client Project ID: Mill Effluent 1557

Lab Project No:
Project Deliverables Type: Pace Level B
Project Report Due Date : 12/15/00
Profile: 10

Lab Smp No: Client Smp ID: MILL EFFLUENT Collected Date: 11/30/00 07:00
Proj Smp No: Matrix: Water Smp Type: PS Line Item: 1 Received Date: 12/01/00 10:30

PARAMETER	METHOD	UNIT PRICE	WR	SPL	%
Total Suspended Solids	EPA 160.2	$			0
Biochemical Oxygen Demand, 5 d	SM 5210B	$			0
	Sub Total - Sample 102425097	$			
	Grand Total - Project 1039342	$			

Unit pricing above does not reflect associated shipping, bottle, sample disposal and other miscellaneous charges.
Prices are subject to change without notice. Contact your Project Manager for further information.

DATE: 12/01/00 PAGE: 1

Attachment IV – Method Hold Times

Parameter	Matrix	Methods	Max Hold Time
2, 3, 7, 8-TCDD	Soil	EPA 1613B	90/40 Days
2, 3, 7, 8-TCDD	Water	EPA 1613B	90/40 Days
Acidity	Water	EPA 305.1,SM 2310B	14 Days
Alkalinity	Water	EPA 310.1/310.2,SM 2320B	14 Days
Alpha Emitting Radium Isotopes	Water	EPA 903,EPA 9315	180 days
Anions by IC, including Br, Cl, F, NO_2, NO_3, PO_4, SO_4, SO_3	Water	EPA 300,EPA 9056	By anion
Aromatic and Halogenated Volatiles	Soil	EPA 5035/8021	14 days
Aromatic and Halogenated Volatiles	Water	SM 601/602,EPA 8021	14 Days
Bacteria, Total Plate Count	Water	SM 9221D	24 Hours
Base/Neutrals and Acids	Soil	EPA 8270	14/40 Days
Base/Neutrals and Acids	Water	SM 625,EPA 8270	7/40 Days
Base/Neutrals, Acids & Pesticides	Water	EPA 525.1/525.2	7/30 Days
BOD/cBOD	Water	EPA 405.1,SM 5210B	48 hours
BTEX/Total Hydrocarbons	Air	EPA TO-3	14 Days
BTEX/Total Hydrocarbons	Air	EPA TO-3	48 Hours
Chloride	Water	EPA 325.2/325.3,SM 4500-Cl,EPA 9250/9251/9252	28 Days
Chlorinated Herbicides	Soil	EPA 8151	14/40 Days
Chlorinated Herbicides	Water	EPA 515.1,EPA 8151	14/28 Days**
Chorine, Residual	Water	EPA 330.1/330.5/ 330.2,SM 4500-Cl	Immediate
COD	Water	EPA 410.1/410.2/ 410.4,SM 5220C	28 Days
Color	Water	EPA 110.3/110.2,SM 2120B,C,E	48 Hours
Condensable Particulate Emissions	Air	EPA 202	6 Months
Cyanide, Reactive	Water	EPA Chapter 7	28 Days
Cyanide, Total and Amenable	Water	EPA 335.2/335.3/ 335.4,SM 4500-CN,EPA 9010/9012	14 Days (24 hrs if sulfide present)
Diesel Range Organics	Soil	EPA 8015	14/40 Days
Diesel Range Organics	Water	EPA 8015	7/40 Days
Dioxins & Furans	Air	EPA TO-9	30/45 Days
EDB & DBCP	Water	EPA 504.1,EPA 8011	14 Days
Explosives	Water	EPA 8330	7/40 Days
Explosives	Soil	EPA 8330	14/40 Days
Ferrous Iron	Water	SM 3500-Fe-D	Immediate
Flashpoint/Ignitability	Water	EPA 1010/1030	28 Days
Fluoride	Water	EPA 340.1/340.2,SM 4500-Fl C,D	28 Days
Gamma Emitting Radionuclides	Water	EPA 901.1	180 days
Gas Range Organics	Water	EPA 8015	14 Days
Gasoline Range Organics	Soil	EPA 5035/8015	14 days
Gross Alpha (NJ 48Hr Method)	Water	EPA NJAC 7:18-6	48 Hrs
Gross Alpha and Gross Beta	Water	EPA 900,EPA 9310	180 days
Haloacetic Acids	Water	EPA 552.1/552.2	14/7 Days

Hardness, Total ($CaCO_3$)	Water	EPA 130.2/130.1,SM 2340B or C	6 Months
Hexavalent Chromium	Water	EPA 218.4,SM 3500-Cr,EPA 7196	24 Hours
Hydrogen Halide & Halogen Emissions	Air	EPA 26	6 Months
Lead Emissions	Air	EPA 12	6 Months
Low Level Mercury	Water	EPA 1631	90 days (if preserved and oxidized)
Mercury	Soil	EPA 7471	28 days
Mercury	Water	EPA 245.1,EPA 7470	28 Days
Metals	Air	EPA IO-3.5	6 Months
Metals	Soil	EPA 6010 or 6020	6 months
Metals (and other ICP elements)	Water	EPA 200.7/200.8,EPA 6010/6020	6 Months
Methane, Ethane, & Ethene	Water	EPA 3810M	14 Days
Methane, Ethane, Ethene	Air	EPA 3C-M	14 Days
Methane, Ethane, Ethene	Air	EPA 3C-M	48 Hours
Nitrogen, Ammonia	Water	EPA 350.1/350.2/ 350.3,SM 4500-NH3	28 Days
Nitrogen, Kjeldahl	Water	EPA 351.2/351.3,SM 4500-Norg	28 Days
Nitrogen, Nitrate	Water	EPA 352.1/353.2/ 353.3,SM 4500-N03	48 Hours
Nitrogen, Nitrate & Nitrite	Water	EPA 353.2,SM 4500-N03	28 Days
Nitrogen, Nitrite	Water	EPA 354.1,SM 4500-N02	48 Hours
Nitrogen, Organic	Water	EPA 351.3,SM 4500-Norg	28 Days
Non-Methane Organics	Air	EPA 25C	14 Days
Non-Methane Organics	Air	EPA 25C	48 Hours
Odor	Water	EPA 140.1,SM 2150B	24 Hours
Oil and Grease/HEM	Water	EPA 1664A,SM 5520B,D,EPA 9070	28 Days
Organchlorine Pesticides and PCB's	Water	EPA 608	7/40 Days
Organochlorine Pesticides & PCBs	Air	EPA TO-4	7/40 Days
Organochlorine Pesticides and PCB's	Water	EPA 8081/8082	7/40 Days
Organochlorine Pesticides and PCBs	Soil	EPA 8081/8082	14/40 Days
Organophosphorous Pesticides	Soil	EPA 8141	14/40 Days
Organophosphorous Pesticides	Water	EPA 8141	7/40 Days
Oxygen, Dissolved	Water	EPA 360.1,SM 4500-D	Immediate
Paint Filter Liquid Test.	Water	EPA 9095	N/A
Particulates	Air	EPA PM10	6 Months
Permanent Gases	Air	EPA 3C	14 Days
Permanent Gases	Air	EPA 3C	48 Hours
pH	Water	EPA 150.1/150.2,SM 4500-H,EPA 9040/9041	Immediate
Phenol, Total	Water	EPA 420.1/420.2,SM ,EPA 9065/9066	28 Days
Phosphorus, Orthophosphate	Water	EPA 365.1/365.2/ 365.3,SM 4500-P	48 Hours
Phosphorus, Total	Water	EPA 365.1/365.2/ 365.4,SM 4500-P	28 Days

Polynuclear Aromatic Hydrocarbons	Air	EPA TO-13	7/40 Days
Polynuclear Aromatic Hydrocarbons	Soil	EPA 8310	14/40 Days
Polynuclear Aromatic Hydrocarbons	Water	EPA 610,EPA 8310	7/40 Days
Radioactive Strontium	Water	EPA 905	180 days
Radium-226 Radon Emanation Technique	Water	EPA 903.1	180 days
Radium-228	Water	EPA 904,EPA 9320	180 days
Silica, Dissolved	Water	EPA 370.1,SM 4500-Si D	28 Days
Solids, Settleable	Water	EPA 160.5,SM 2540F	48 Hours
Solids, Total	Water	EPA 160.3,SM 2540B	7 Days
Solids, Total Dissolved	Water	EPA 160.1,SM 2540C	7 Days
Solids, Total Suspended	Water	EPA 160.2,SM 2540D	7 Days
Solids, Total Volatile	Water	EPA 160.4,SM 2540E	7 Days
Specific Conductance	Water	EPA 120.1,SM 2510B,EPA 9050	28 Days
Stationary Source Dioxins & Furans	Air	EPA 23	30/45 Days
Stationary Source Mercury	Air	EPA 101	6 Months, 28 Days for Hg
Stationary Source Metals	Air	EPA 29	6 Months, 28 Days for Hg
Stationary Source PM10	Air	EPA 201A	6 Months
Stationary Source Particulates	Air	EPA 5	6 Months
Sulfate	Water	EPA 375.4/375.2,SM 4500-S04,EPA 9036/9038	28 Days
Sulfide, Reactive	Water	EPA Chapter 7	28 Days
Sulfide, Total	Water	EPA 376.1, 376.2,SM 4500-S,EPA 9030	7 Days
Sulfite	Water	EPA 377.1,SM 4500-S03	Immediate
Surfactants	Water	EPA 425.1,SM 5540C	48 Hours
Total Organic Carbon (TOC)	Water	EPA 415.1/415.2,SM 5310B,C,D,EPA 9060	28 Days
Total Organic Halogen (TOX)	Water	EPA 450.1,SM 5320,EPA 9020/9021	14 Days
Tritium	Water	EPA 906	180 days
Turbidity	Water	EPA 180.1,SM 2130B	48 Hours
Uranium Radiochemical Method	Water	EPA 908,SM D5174-97	180 days
Volatiles	Air	EPA 18	14 Days
Volatiles	Air	EPA 18	48 Hours
Volatiles	Air	EPA TO-14	14 Days
Volatiles	Air	EPA TO-14	48 Hours
Volatiles	Air	EPA TO-15	14 Days
Volatiles	Soil	EPA 5035/8260	14 days
Volatiles	Water	EPA 524.1/524.2	14 Days
Volatiles	Water	SM 624	14 Days (7 unpreserved)
Volatiles	Water	EPA 8260	14 Days

TECHNICAL NOTES

TECHNICAL BULLETIN

Collection of Wipe Samples for the Determination of Polychlorinated Dibenzo-p-Dioxins and Dibenzofurans

Application Overview

Surface wipe samples are often collected as a source of information on levels of contamination that may be present before, during or after remediation work. This type of sample is often used to determine if goals for site clean-up have been achieved and to determine if equipment can be safely transported off of the work site. Wipe samples can also be used to determine disposal routes for waste materials, and are frequently called for during the decontamination process, after fires involving hazardous materials. Several analytical approaches can be taken, depending upon the specific compound(s) of interest and the detection limit requirements. Typically the procedure involves wiping the surface in question with a solvent saturated material which is then shipped to the laboratory for analysis.

Detection/Reporting Limits

Several analytical variations are available to meet a variety of assessment needs. The size of the surface to be tested along with the analytical method can be adapted to meet the action limits of the project. The following table summarizes reporting limits based on the application of these options:

Homologue Group	8290		8280	
Wipe area (detection units)	1 m^2 (ng/m^2)	100 cm^2 (ng/m^2)	1 m^2 (ng/m^2)	100 cm^2 (ng/m^2)
Tetra	0.01	1.0	10	1000
Penta, Hepta, Hexa	0.05	5.0	25	2500
Octa	0.10	10.0	50	5000

Sampling Guidelines

Site specific safety requirements must be followed at all times. At a minimum, gloves capable of stopping solvent transmission shall be worn during sample collection. Respiratory apparatus is recommended when collecting dust, ash, etc. samples which might easily become airborne. Additional safety apparatus may be necessary dependent upon the location and materials being collected. Consult with the site health and safety officer for details. The following information is a general summary only, consult NIOSH, OSHA or similar documentation for more complete sampling guidelines.

Mark off a 100 cm^2 area (or 1 m^2) of the surface to be tested. Use one clean, pre-wetted (hexane) swab to wipe the surface in one direction and then in a perpendicular direction. (four wipes are typically used to wipe a 1 m^2 area) For personal safety, tongs may be used to hold the wipes when sampling. Transfer the used wipe into the original amber glass jar for submission to the laboratory and securely replace the cap on the jar. Pace Analytical will provide appropriate wipe sample kits upon request. Ship samples via overnight carrier, chilled to 4°C (39°F). Include completed chain of custody document.

PACE ANALYTICAL SERVICES, INC.
1700 Elm Street, STE 200
Minneapolis, MN 55414
www.pacelabs.com

Work Instruction
Title: Client-Specific High Resolution Dioxin Screening Procedure Weston Tittabawassee River Program

Method: EPA 1613B

Approvals (Signature/Date):

Patrick Rainey — Date 4/11/08 Technical Manager	Joe Schairer — Date 4-11-2008 Health & Safety Manager / Coordinator
Pamela Schemmer — Date 4/11/08 Quality Assurance Manager	Karla Buechler — Date 4/11/08 Laboratory Director

Copyright Information:
This documentation has been prepared by TestAmerica Laboratories, Inc. and its affiliates ("TestAmerica"), solely for their own use and the use of their customers in evaluating their qualifications and capabilities in connection with a particular project. The user of this document agrees by its acceptance to return it to TestAmerica upon request and not to reproduce, copy, lend, or otherwise disclose its contents, directly or indirectly, and not to use if for any other purpose other than that for which it was specifically provided. The user also agrees that where consultants or other outside parties are involved in the evaluation process, access to these documents shall not be given to said parties unless those parties also specifically agree to these conditions.

THIS DOCUMENT CONTAINS VALUABLE CONFIDENTIAL AND PROPRIETARY INFORMATION. DISCLOSURE, USE OR REPRODUCTION OF THESE MATERIALS WITHOUT THE WRITTEN AUTHORIZATION OF TESTAMERICA IS STRICTLY PROHIBITED. THIS UNPUBLISHED WORK BY TESTAMERICA IS PROTECTED BY STATE AND FEDERAL LAW OF THE UNITED STATES. IF PUBLICATION OF THIS WORK SHOULD OCCUR THE FOLLOWING NOTICE SHALL APPLY:

©COPYRIGHT 2008 TESTAMERICA LABORATORIES, INC. ALL RIGHTS RESERVED.

Facility Distribution No. UNCONTROLLED **Distributed To:** West Sacramento Bids Folder

1. PURPOSE

1.1. This procedure describes the technique for screening solid samples prior to analysis by WS-IDP-0007/WS-ID-0007 (Method 1613B).

1.2. The screening data obtained from this procedure are used to determine whether to process the sample as-is, perform dilutions to minimize over range values, or to perform the analysis utilizing both dilutions and a smaller sample size.

1.3. The screening procedure described in this work instruction is effective for samples initiated on or after 4/4/2008 for this project, except as noted in Section 5.2.1.

2. DEFINITIONS

2.1. Definitions of terms used in this work instruction may be found in the glossary of the Laboratory Quality Assurance Manual (QAM).

2.2. Data qualifiers are defined on each data report. Commonly used data qualifiers are defined in the QAM.

2.3. Refer to SOPs WS-IDP-0007, and WS-ID-0007 for additional definitions of terms found in this work instruction.

3. STANDARDS AND REAGENTS

3.1. Refer to SOPs WS-IDP-0007 and WS-ID-0007 for information regarding standards and reagents used in execution of this work instruction.

4. SAFETY

4.1. Refer to SOPs WS-IDP-0007 and WS-ID-0007 for information regarding safety procedures.

5. PROCEDURE

5.1. Procedural Variations

Procedural variations are allowed only if deemed necessary in the professional judgment of the supervisor to accommodate variation in sample matrix, radioactivity, chemistry, sample size, or other parameters. Any variation in procedure shall be completely documented using a Nonconformance memo and approved by a supervisor and QA/QC manager. If contractually required, the client will be notified. The Nonconformance memo will be filed in the project file.

Any deviations from this procedure identified after the work has been completed must be documented as a nonconformance, with a cause and corrective action described. A Nonconformance memo shall be used for this documentation.

5.2. As described in SOP WS-IDP-0007, a 10 gram aliquot of each sample is initially fortified with a complete suite of 13C-labelled internal standards and extracted with toluene for 16 hours.

5.2.1. For this program, samples will be spiked with twice the volume of internal standard solution specified in WS-IDP-0007, to accommodate greater sample dilution, if determined necessary following screening. In accordance with laboratory policy, all spike amounts, sample sizes, dilutions and final volumes must be documented. All calculations based on this information must be verified during data review. **Effective for samples processed on or following 4/11/2008.**

5.3. The sample extract is concentrated to 10 mL using rotary evaporation.

5.4. A 20 uL aliquot of the 10 mL sample extract is removed. 20 uL of the recovery standard solution (13C-1,2,3,4,-TCDD and 13C-1,2,3,6,7,8-HxCDD in tetradecane, as described in the SOP WS-IDP-0007) is added to the screening aliquot. This is then concentrated to a volume of 20 uL. The screening aliquot represents a 500X dilution of the extract normally analyzed.

5.5. The screening aliquot is analyzed under the instrument conditions described by SOP WS-ID-0007, using HRMS/SIM.

5.6. The screening data is evaluated by using the recovery standard to estimate native concentrations in the screen extract. Further action is taken using this information as noted below:

5.6.1. Low-level detections (no detections, or detections less than the lower calibration limit):

5.6.1.1. Process the remaining extract as per SOP WS-IDP-0007 and analyze as described in WS-ID-0007. This process is optimized to minimize values above the instrument's linear range.

5.6.2. Moderate detections (detections estimated to be from 0.5 to 20 ng/g for the tetra-substituted isomers, from 2.5 to 100 ng/g for the penta-, hexa-, and hepta- substituted isomers, and 5.0 to 200 ng/g for the octa-substitued isomers):

5.6.2.1. Using the estimated concentrations from the screen data, take an aliquot of the remaining extract equal to an appropriate dilution that will enable the analysis to minimize over range values without

sacrificing internal standard quality control requirements (including sensitivity and ion abundance ratios). Process this "diluted" aliquot through cleanups (SOP WS-IDP-0007) and analyze as described in the SOP WS-ID-0007. After analysis, review all documented information and verify all calculations.

Note: the dilution is optimized to minimize values above the instrument's linear range and maintain acceptable internal standard quality control requirements.

5.6.3. High detections (detections estimated to be greater than 20 ng/g for the tetra-substituted isomers, greater than 100 ng/g for the penta-, hexa-, and hepta-substituted isomers, greater than 200 ng/g for the octa-substitued isomers):

5.6.3.1. Using the estimated concentrations from the screen data, reextract the sample using a smaller sample size, no less than 0.1g (aliquots less than 0.1g are unlikely to adequately represent the sample and are discouraged), and spike with an appropriate amount of internal standard. A dilution as described in Section 5.6.2 may be necessary to achieve the correct dilution for samples of this nature. After taking the correct sample aliquot to handle the expected concentration, process this "diluted" aliquot through cleanups (SOP WS-IDP-0007) and analyze as described in the SOP WS-ID-0007. After analysis, review all documented information and verify all calculations.

Note: the reduced sample size and/or additional dilution is optimized to minimize values above the instrument's linear range and maintain acceptable internal standard quality control requirements.

6. REFERENCES/CROSS REFERENCES

6.1. WS-ID-0007, "Analysis of Tetra- Through Octa Chlorinated Dioxins and Furans By Isotope Dilution HRGC/HRMS By Method 1613B"

6.2. WS-IDP-0007, "Preparation of Samples for Tetra- Through Octa Chlorinated Dioxins and Furans By Isotope Dilution HRGC/HRMS By Method 1613B"

7. ATTACHMENTS

7.1. Attachment 1 – Dioxin Screening Flowchart

8. REVISION HISTORY

8.1. WS-WI-0024, Revision 1, Effective 04/11/2008

Attachment 1 – Dioxin Screening Flowchart

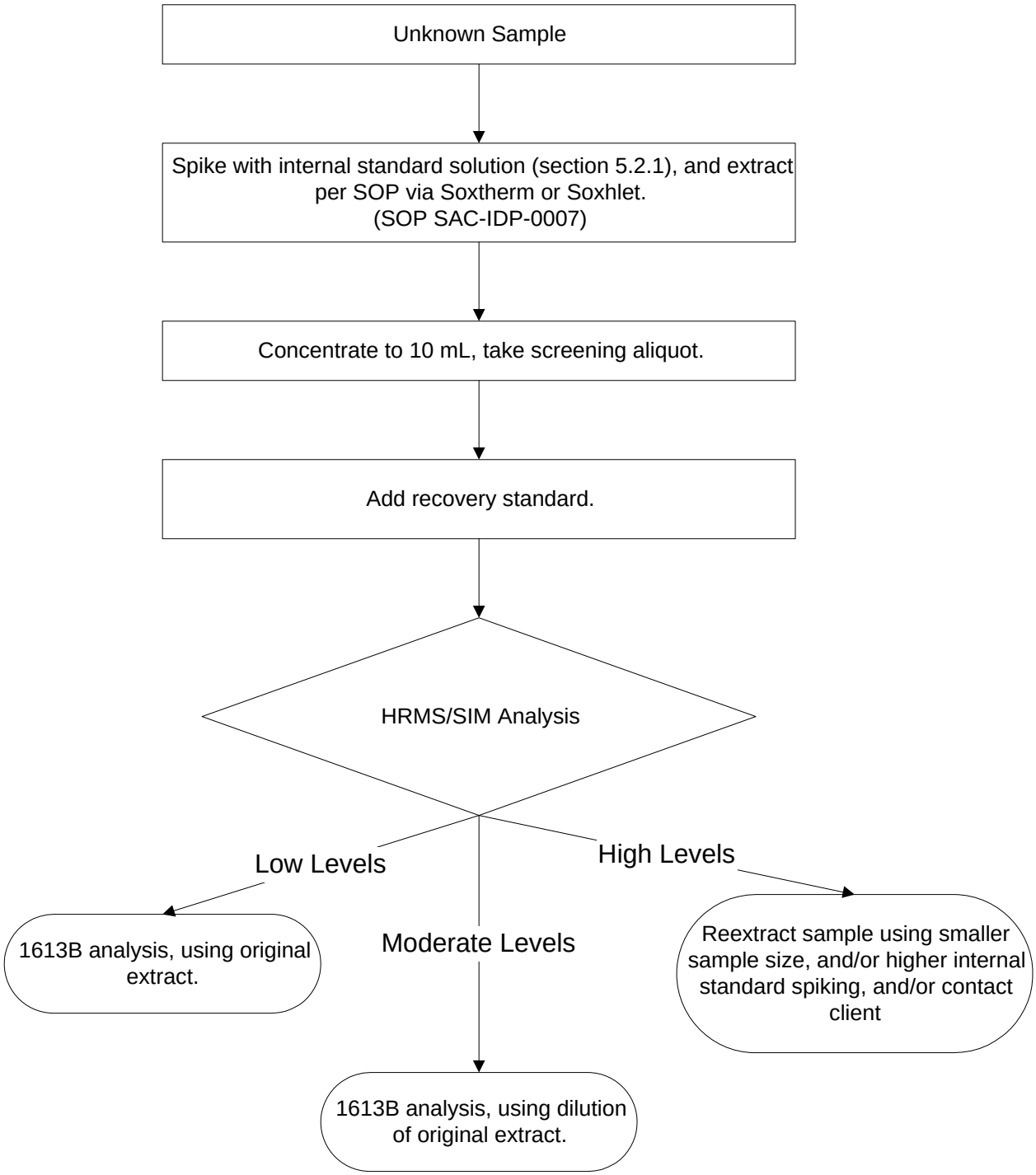

Title: Analysis of Tetra- Through Octa Chlorinated Dioxins and Furans By Isotope Dilution HRGC/HRMS By Method 1613B [Method 1613B]

Approvals (Signature/Date):

Doug Weir 04/10/08 Date Technical Manager	Joe Schairer 4/10/08 Date Health & Safety Manager / Coordinator
Pamela Schemmer 4/10/08 Date Quality Assurance Manager	Karla Buechler 4/10/08 Date Laboratory Director

Copyright Information:
This documentation has been prepared by TestAmerica Analytical Testing Corp. and its affiliates ("TestAmerica"), solely for their own use and the use of their customers in evaluating their qualifications and capabilities in connection with a particular project. The user of this document agrees by its acceptance to return it to TestAmerica upon request and not to reproduce, copy, lend, or otherwise disclose its contents, directly or indirectly, and not to use if for any other purpose other than that for which it was specifically provided. The user also agrees that where consultants or other outside parties are involved in the evaluation process, access to these documents shall not be given to said parties unless those parties also specifically agree to these conditions.

THIS DOCUMENT CONTAINS VALUABLE CONFIDENTIAL AND PROPRIETARY INFORMATION. DISCLOSURE, USE OR REPRODUCTION OF THESE MATERIALS WITHOUT THE WRITTEN AUTHORIZATION OF TESTAMERICA IS STRICTLY PROHIBITED. THIS UNPUBLISHED WORK BY TESTAMERICA IS PROTECTED BY STATE AND FEDERAL LAW OF THE UNITED STATES. IF PUBLICATION OF THIS WORK SHOULD OCCUR THE FOLLOWING NOTICE SHALL APPLY:

©COPYRIGHT 2008 TESTAMERICA LABORATORIES, INC. ALL RIGHTS RESERVED.

Facility Distribution No. UNCONTROLLED **Distributed To:** TestAmerica West Sacramento Bids Folder

1. SCOPE AND APPLICATION

1.1. The procedures outlined within this SOP are appropriate for the analysis of samples and the determination of tetra-through-octa chlorinated dibenzo-p-dioxins and dibenzofurans, and 2,3,7,8-TCDD/TCDF associated with the Clean Water Act (as amended 1987); the Resource Conservation and Recovery Act (as amended 1986); and the Comprehensive and Liability Act (as amended 1986). Preparation of samples is addressed in SOP WS-IDP-0007.

1.2. Specificity is provided for determination of the seventeen 2, 3, 7, 8-substituted polychlorinated dibenzo-p-dioxins (PCDD) and polychlorinated dibenzofurans (PCDF). See Table 8 for list of analytes and nominal reporting limits.

2. SUMMARY OF METHOD

2.1. Samples containing coarse solids are prepared for extraction by grinding or homogenization. Drinking water samples are extracted with methylene chloride using separatory funnel procedures. Non drinking water type samples are filtered and then extracted with methylene chloride using separatory funnel procedures; the particulates from the water samples, soils, and other finely divided solids are extracted using a combined Soxhlet (or equivalent) extraction/Dean-Stark azeotropic distillation with toluene (Reference 7, Method 1613).

2.1.1. Internal Standards consisting of stable isotopically labeled analogs of 15 of the PCDDs and PCDFs and are added to each sample prior to extraction. Prior to cleanup and analysis, the extracts of the filtered water and the particulates are combined.

2.2. After extraction, $^{37}Cl_4$-labeled 2, 3, 7, 8, -TCDD is added to each extract to measure the efficiency of the cleanup process. Samples are then permeated through silica gel, acidic alumina, and activated carbon chromatography columns. High performance liquid chromatography (HPLC), basic alumina, or back extraction with sulfuric acid/water/NaOH/water can be used for further isolation of the 2, 3, 7, 8-isomers or other specific isomers or congeners.

2.3. After cleanup, the extract is concentrated to near dryness and a known amount of recovery standard is added to each extract. The recovery standard contains two $^{13}C_{12}$-labeled analogs ($^{13}C_{12}$-1,2,3,4-TCDD and $^{13}C_{12}$-1,2,3,7,8,9-HxCDD). Each extract is concentrated to a final volume in tetradecane. A 1-2uL aliquot of the extract is injected into the gas chromatograph/mass spectrometer.

2.4. The analytes are separated by the GC and detected by a high resolution ($\geq$10,000) mass spectrometer. Two exact masses (m/z's) are monitored for each analyte. The

isotopically labeled compounds serve to correct for the variability of the analytical technique.

2.5. Dioxins and furans are identified by comparing GC retention times and the ion abundance ratios of the m/z's with the corresponding retention time ranges of authentic standards and the theoretical ion abundance ratios of the exact m/z's. Isomers and congeners are identified when the retention times and m/z abundance ratios agree within pre-defined limits. This is accomplished for the specific 2,3,7,8 substituted isomers by using a GC column or columns capable of resolving the 2,3,7,8-substituted isomers from other PCDD/PCDF isomers.

2.6. Quantitative analysis is performed by GC/MS using selected ion current profile (SICP) areas, in one of two ways.

2.6.1. For the 15 2,3,7,8-substituted isomers for which labeled analogs are available (see Table 3), the GC/MS system is calibrated and the compound concentration is determined using an isotope dilution technique. Although a labeled analog of the octa-chlorinated dibenzofuran (OCDF) is available, using high-resolution mass spectrometry, it produces an m/z that may interfere with the identification and quantitation of the unlabeled octa-chlorinated dibenzo-p-dioxin (OCDD). Therefore, this labeled analog has not been included in the calibration standards, and the unlabeled OCDF is quantitated against the labeled OCDD. Because the labeled analog of 1,2,3,7,8,9-HxCDD is used as a recovery standard (i.e., not added before extraction of the sample), it cannot be used to quantitate the unlabeled compound by strict isotope dilution procedures. Therefore, the unlabeled 1,2,3,7,8,9-HxCDD is quantitated using the average of the responses of the labeled analogs of the two 2,3,7,8-substituted HxCDD's, $^{13}C_{12}$-1,2,3,4,7,8-HxCDD, and $^{13}C_{12}$-1,2,3,6,7,8-HxCDD. As a result, the concentration of the unlabeled 1,2,3,7,8,9-HxCDD is quantitated using the average recovery of the two $^{13}C_{12}$-HxCDD internal standards.

2.6.2. For non-2,3,7,8-substituted isomers, the total concentrations of all isomers within a level of chlorination (i.e., total TCDD), are determined using the average response factor from the calibration of 2,3,7,8-substituted isomers at the same level of chlorination.

2.7. The quality of the analysis is assured through reproducible calibration and testing of the extraction, cleanup, and GC/MS systems.

3. DEFINITIONS

3.1. Definitions of terms used in this SOP may be found in the glossary of the Laboratory Quality Manual (LQM).

3.2. Polychlorinated dibenzo-p-dioxins (PCDDs) and polychlorinated dibenzofurans (PCDFs): compounds (Figure 1) that contain from one to eight chlorine atoms. The seventeen 2,3,7,8-substituted PCDDs and PCDFs are shown in Table 3. The number of isomers at different chlorination levels is shown in Table 1.

3.3. Homologous series: A series of compounds in which each member differs from the next by a constant amount. The members of one level in the series are called homologs – a group of chlorinated dibenzodioxins or dibenzofurans having a specific number of chlorine atoms.

3.4. Isomer: Chemical compounds that contain the same number of atoms of the same elements, but differ in structural arrangement and properties. For example, 1,2,3,4-TCDD and 2,3,7,8-TCDD are different structural isomers.

3.5. Congener: Any isomer of any homologous series.

3.6. Internal Standard (IS): An internal standard is a $^{13}C_{12}$-labeled analog of a congener chosen from the compounds listed in Table 3. Internal standards are added to all samples including method blanks and quality control samples before extraction, and they are used to quantitate the concentration of the target analytes. Fifteen internal standards are used in this method. There is one for each of the 2,3,7,8-substituted dioxin and furan isomers (except for OCDF and 1,2,3,7,8,9-HxCDD see section 2.6.1) with the degree of chlorination ranging from four to eight. Additional internal standards may be added to act as retention time references, but they are not used for quantitation.

3.7. Internal Standard Solution: A solution (isooctane or toluene) containing the fifteen internal standards, which is used to spike all samples prior to extraction.

3.8. Cleanup Recovery Standard (CRS): A $^{37}Cl_4$-2,3,7,8-TCDD analog that is added to each sample following extraction to measure the efficiency of the cleanup process.

3.9. Cleanup Recovery Standard Solution: A solution (isooctane or toluene) containing the cleanup recovery standard.

3.10. Recovery Standard (RS): Two recovery standards are used to determine the percent recoveries for the internal standards. The 13C-1,2,3,4-TCDD is used to measure the percent recoveries of the tetra- and pentachlorinated internal standards while 13C-1,2,3,7,8,9-HxCDD is used to determine the recovery of the hexa-hepta- and octachlorinated internal standards . 13C-1,2,3,7,8,9-HxCDD also acts as a retention time reference for the unlabeled analog present in sample extracts. They are added to the final sample extract before HRGC/HRMS instrument analysis.

3.11. Recovery Standard Solution: A solution (tetradecane, toluene, or isooctane) containing the two recovery standards, which is added to the final sample extract before the HRGC/HRMS analysis.

3.12. DB-5 Column Performance Standard Mixture (DB5 CPSM)(See Table 6): A tetradecane solution containing a mixture of selected PCDD/PCDF standards including the first and last eluting compounds from each homologous series (a window defining mixture), which is used to demonstrate continued acceptable performance of the DB-5 capillary column (i.e., ≤25% valley separation of 2,3,7,8-TCDD from other TCDD isomers) and to define the homologous PCDD/PCDF retention time windows.

(NOTE: The CPSM contains the second to the last eluting HxCDD isomer [1,2,3,4,6,7-HxCDD], however, the Internal Standard Solution [present in all calibration standards and samples] does contain the last eluting HxCDD [1,2,3,7,8,9-HxCDD])

3.13. DB-225 Column Performance Standard Mixture (DB-225 CPSM)(See Table 6): A tetradecane solution containing a mixture of selected TCDF isomers used to demonstrate continued acceptable performance of the DB-225 capillary column (i.e., ≤25% valley separation of 2,3,7,8-TCDF from other TCDF isomers).

3.14. Performance Evaluation Materials (PEM's): Representative sample portions containing known amounts of certain unlabeled PCDD/PCDF congeners (in particular the ones having a 2,3,7,8-substitution pattern). Representative interferences may be present. PEMs may be obtained from the EPA EMSL-LV or other sources and submitted to potential contract laboratories, which must analyze these and obtain acceptable results before being awarded a contract for sample analyses (see IFB Pre-Award Bid Confirmations). PEMs may also be included as unspecified ("blind") quality control (QC) samples in any sample batch submitted to a laboratory for analysis.

3.15. Signal to Noise Ratio (S/N): The ratio of the mass spectrometer response of a GC peak to the background noise signal.

3.16. Tuning (Mass Resolution Check): Standard method used to demonstrate a static resolving power of 10,000 minimum (10 percent valley definition).

3.17. Method Calibration Limits: For a given sample size, a final extract volume, and the lowest and highest concentration calibration solutions, the lower and upper calibration limits delineate the region of quantification for which the HRGC/HRMS system was calibrated with standard.

3.18. Matrix Spike Fortification Solution (also known as the Native Spike Solution): Solution used to prepare the laboratory control sample (LCS), matrix spike (MS), and

matrix spike duplicate (SD) samples. It contains all unlabeled analytes listed in Table 3.

3.19. PFK: Perfluorokerosene; used to calibrate the exact m/z scale in the HRMS.

3.20. Estimated Detection Limit (EDL): The sample specific estimated detection limit (EDL) is the concentration of a given analyte required to produce a signal with a peak height of at least 2.5 times the background noise level.

3.21. Estimated Maximum Possible Concentration (EMPC): The calculated concentration of a signal having the same retention time as a PCDD/PCDF congener, but which does not meet the other qualitative identification criteria defined in the method.

3.22. Lower Calibration Limit (LCL): The level at which the entire analytical system must give a recognizable signal and acceptable calibration. It is equivalent to the concentration of the lowest calibration standard, assuming that all method-specified sample weights, volumes, and cleanup procedures have been employed.

3.23. Target Detection Limit (TDL): One-half the lower calibration limit (LCL). Analytes which meet criteria and have concentrations between the TDL and the LCL are "J-values" and are considered as estimated. Analyte concentrations which fall below the TDL are considered "not detected" with a detection limit of that concentration (these values can also be considered estimated maximum concentrations).

4. INTERFERENCES

4.1. Solvents, reagents, glassware and other sample processing hardware may yield artifacts and/or elevated baselines causing misinterpretation of chromatograms. Specific selection of reagents and purification of solvents by distillation in all-glass systems may be required. Where possible, reagents are cleaned by extraction or solvent rinse.

4.2. Proper cleaning of glassware is extremely important because glassware may not only contaminate the samples, but may also remove the analytes of interest by absorption on the glassware surface.

4.2.1. Glassware is rinsed with solvent and washed with a detergent solution as soon after use as practical. Sonication of glassware containing a detergent solution for approximately 30 seconds may aid in cleaning. Glassware with removable parts, particularly separatory funnels with Teflon stopcocks, must be disassembled prior to detergent washing.

4.2.2. After detergent washing, glassware is immediately rinsed with tap water or DI water, then with acetone, then with toluene. The toluene rinse is followed by hexane, and then methylene chloride.

4.2.3. Do not bake reusable glassware in an oven as a routine part of cleaning. Baking may be warranted after particularly dirty samples are encountered, but should be minimized, as repeated baking of glassware may cause active sites on the glass surface that will irreversibly absorb PCDDs/PCDFs.

4.2.4. Immediately prior to use, Soxhlet (or equivalent) extraction glassware is pre-extracted with toluene for approximately 4 hours (1 hour for Soxtherm extraction glassware) (See Method 1613A, Section 11.2.3). Separatory funnels are rinsed sequentially with acetone, toluene, hexane and methylene chloride.

4.3. All materials used in the analysis shall be demonstrated to be free from interferences by running reference blanks initially and with each sample set (samples started through the extraction process on a given 12-hour shift, to a maximum of 20 samples).

4.3.1. The reference matrix blank must simulate, as closely as possible, the sample matrix under test. Reagent water is used to simulate water samples; playground sand, white quartz sand, or sodium sulfate can be used to simulate soils; filter paper or Soxhlet extraction thimbles are used to simulate paper and similar materials; and other materials can be used to simulate other matrices.

4.4. Interferences co-extracted from samples will vary considerably from source to source, depending on the diversity of the site being sampled. Interfering compounds may be present at concentrations several orders of magnitude higher than the PCDDs and PCDFs. The most frequently encountered interferences are: chlorinated-biphenyls; methoxy biphenyls; hydroxy biphenyl ethers; benzyl phenyl ethers; polynuclear aromatics; and pesticides. Because very low levels of PCDDs and PCDFs are measured by this method, the elimination of interferences is essential. The cleanup steps given in WS-IDP-0007 can be used to reduce or eliminate these interferences and thereby permit reliable determination of the PCDDs and PCDFs at the levels shown in Table 8.

4.4.1. If South Carolina samples show diphenyl ethers at levels that could contribute to positive furan hits, a clean-up to remove them must be performed.

5. SAFETY

Employees must abide by the policies and procedures in the Corporate Environmental Health and Safety Manual (CW-E-M-001) and this document. This procedure may involve hazardous material, operations and equipment. This SOP does not purport to address all of the safety problems associated with its use. It is the reponsibility of the user of the method to follow appropriate safety, waste disposal and health practices under the assumption that all samples and reagents are potentially hazardous. Safety glasses, gloves, lab coats and closed-toe, nonabsorbant shoes are a minimum. All work must be stopped in the event of a known or potential compromise to the health or safety of an associate. The situation must be reported immediately to a supervisor, the EH&S Staff, or a senior manager.

5.1. Specific Safety Concerns or Requirements

5.1.1. The effluents of sample splitters for the gas chromatograph and roughing pumps on the HRGC/HRMS system are passed through either a column of activated charcoal or be bubbled through a trap containing oil or high-boiling alcohol.

5.1.2. Eye protection that satisfies ANSI Z87.1, laboratory coat, and chemically resistant gloves must be worn while samples, standards, solvents, and reagents are being handled. Latex and vinyl gloves provide no protection against most of the organic solvents used in this method. Nitrile or similar gloves must be used. Latex gloves may be used for methanol.

5.1.3. Exposure to chemicals must be maintained as low as reasonably achievable; therefore all samples must be opened, transferred and prepared in a fume hood. Solvent and waste containers will be kept closed unless transfers are being made.

5.1.4. Laboratory procedures such as repetitive use of pipettes, repetitive transferring of extracts and manipulation of filled separatory funnels and other glassware represent a significant potential for repetitive motion or other ergonomic injuries. Laboratory associates performing these procedures are in the best position to realize when they are at risk for these types of injuries. Whenever a situation is found in which an employee is performing the same repetitive motion, the employee shall immediately bring this to the attention of their supervisor, manager, or the EH&S staff. The task will be analyzed to determine a better means of accomplishing it.

5.2. Primary Materials Used

5.2.1. The following is a list of the materials used in this method, which have a serious or significant hazard rating.

5.2.2. NOTE: This list does not include all materials used in the method. The table contains a summary of the primary hazards listed in the MSDS for each of the materials listed in the table. A complete list of materials used in the method can be found in the reagents and materials section. Employees must review the information in the MSDS for each material before using it for the first time or when there are major changes to the MSDS.

Material	Hazards	Exposure Limit (2)	Signs and symptoms of exposure
Tetradecane	Irritant	None established	Inhalation of vapors may cause difficulty breathing, headache, intoxication and central nervous system damage.
1 – Always add acid to water to prevent violent reactions.			
2 – Exposure limit refers to the OSHA regulatory exposure limit.			

6. EQUIPMENT AND SUPPLIES

6.1. High-Resolution Gas Chromatograph/High-Resolution Mass Spectrometer/Data System (HRGC/HRMS/DS).

6.1.1. Gas Chromatograph

6.1.1.1. The GC must be equipped for temperature programming.

6.1.1.2. All required accessories must be available, such as syringes, gases, and capillary columns.

6.1.1.3. The GC injection port must be designed for capillary columns.

6.1.1.3.1. The use of splitless injection techniques is recommended. The use of a moving needle injection port is also acceptable.

6.1.1.4. When using the method described in this protocol, a 2-µL injection volume is used consistently (i.e., the injection volumes for all extracts, blanks, calibration solutions and the performance check samples are 2 µL).

6.1.1.4.1. 1 µL injections are allowed; however, laboratories are encouraged to remain consistent throughout the analyses by using the same injection volume at all times on a given HRGC/HRMS/DS.

6.1.2. Gas Chromatograph/Mass Spectrometer (GC/MS) Interface

6.1.2.1. The GC/MS interface components should withstand 350° C.

6.1.2.2. The interface must be designed so that the separation of 2,3,7,8-TCDD from the other TCDD isomers achieved in the gas chromatographic column is not appreciably degraded.

6.1.2.3. Cold spots or active surfaces (adsorption sites) in the GC/MS interface can cause peak tailing and peak broadening.

6.1.2.4. It is recommended that the GC column be fitted directly into the mass spectrometer ion source without being exposed to the ionizing electron beam.

6.1.2.5. Graphite ferrules should be avoided in the injection port because they may adsorb the PCDDs and PCDFs. Vespel® or equivalent ferrules are recommended.

6.1.3. Mass Spectrometer

6.1.3.1. The static resolving power of the instrument must be maintained at a minimum of 10,000 (10 percent valley).

6.1.3.2. The mass spectrometer must be operated in a selected ion monitoring (SIM) mode with a total cycle time (including the voltage reset time) of one second or less.

6.1.4. Data System

6.1.4.1. A dedicated data system is employed to control the rapid multiple ion monitoring process and to acquire the data.

6.1.4.2. Quantification data (peak areas or peak heights) and SIM traces (displays of intensities of each ion signal being monitored including the lock-mass ion as a function of time) must be acquired during the analyses and stored.

6.1.4.3. Quantifications may be reported based upon computer-generated peak areas or upon measured peak heights (chart recording).

6.1.4.4. The data system must be capable of acquiring data for a minimum of 10 ions in a single scan.

6.1.4.5. The data system is capable of switching to different sets of ions (descriptors) at specified times during an HRGC/HRMS acquisition.

6.1.4.6. The data system is able to provide hard copies of individual ion chromatograms for selected gas chromatographic time intervals.

6.1.4.7. The data system is also able to acquire mass-spectral peak profiles and provide hard copies of peak profiles to demonstrate the required resolving power.

6.1.4.8. The data system permits the measurement of noise on the base line.

6.2. GC Column

6.2.1 In order to have an isomer-specific determination for 2,3,7,8-TCDD and to allow the detection of OCDD/OCDF within a reasonable time interval in one HRGC/HRMS analysis, the 60-m DB-5 fused-silica capillary column is recommended.

6.2.2 At the beginning of each 12-hour period during which samples are analyzed and after tuning, acceptable compound separation on the GC column must be demonstrated through the analysis of a column performance check solution.

7. REAGENTS AND STANDARDS

7.1. Solvents and Standards:

7.1.1. High-purity, distilled-in-glass or highest available purity: Tetradecane.

7.1.2. Standards are purchased as solutions or mixtures with certification of their purity, concentration, and authenticity, or prepared from materials of known purity and composition.

7.1.2.1. If the chemical purity is 98% or greater, the weight may be used without correction to compute the concentration of the standard.

7.1.2.2. When not being used, standards can be stored in the dark at room temperature or refrigerated in screw-capped vials with fluoropolymer-lined or Teflon ® - lined caps.

7.1.2.3. A mark is placed on the vial at the level of the solution so that solvent loss by evaporation can be detected. If solvent loss has occurred, the solution should be replaced.

7.1.3. Sealed ampules may be used until the manufacturer's expiration date is exceeded.

7.1.3.1. If no expiration date is provided, then the expiration date will be 10 years from the date the ampule is opened.

7.1.3.2. The solvent level should be monitored prior to each use to assure there has been no concentration of the standard over time.

7.1.4. All calibration, daily internal standard, daily clean up recovery standards, and daily spiking solutions are stable for one year from preparation.

7.1.4.1. After 1 year, solutions may be re-verified. The re-verified solution may be used for an additional year, or until there is evidence of compound degradation or concentration.

7.1.4.2. The re-verification must be performed using an unexpired, not previously re-verified solution from a second lot or second vendor.

7.2. Stock Solutions

7.2.1. Preparation – Prepare in nonane or equivalent solvent per the steps below or purchase as dilute solutions (Cambridge Isotope Laboratories, Cambridge, MA, or equivalent). Observe standard safety precautions.

7.2.2. Dissolve an appropriate amount of assayed reference material in solvent. For example, weigh 1 to 2mg of 2,3,7,8-TCDD to three significant numbers in a 10mL vial with Teflon ® - lined cap.

7.2.3. Stock standard solutions should be checked for signs of degradation prior to the preparation of calibration or performance test standards. Reference standards that can be used to determine the accuracy of calibration standards are available from Cambridge Isotope Laboratories and may be available from other vendors.

7.2.4. Secondary standard – Using stock solutions prepare secondary standard solutions if necessary which can be further diluted the spiking standard solutions (see below).

7.3. Precision and Recovery Standard (PAR) – Also known as the Matrix Spike or Native Spike solution. Contains all the 2,3,7,8-substituted unlabeled analytes listed in Table 4. Prepare using the appropriate standards made in section 7.5 to yield a spiking solution with a concentration of 4.0ng/ml for the tetra- CDDs/CDFs, 20ng/ml for the penta-, hexa-, and hepta- CDDs/CDFs, and 40ng/ml for the octa- CDD/CDF.

7.3.1. This is prepared by the organic preparation department.

7.4. Sample Fortification Solution (Internal Standard Solution) – Also known as the Daily Internal Standard Solution. From stock solutions or purchased mixtures, prepare this solution in isooctane (or toluene) to contain the fifteen internal standards at the nominal concentrations that are listed in Table 4.

7.4.1. This is prepared by the organic preparation department.

7.5. Recovery Standard Solution – This solution contains the two recovery standards ($^{13}C_{12}$-1,2,3,4-TCDD and $^{13}C_{12}$-1,2,3,7,8,9-HxCDD). This solution is preferably prepared in tetradecane. See Table 4 for nominal concentrations.

7.6. Cleanup Recovery Standard Solution (CRS) – Prepare $^{37}Cl_4$-2,3,7,8-TCDD at the concentration shown in Table 4, in isooctane (or toluene).

7.6.1. This is prepared by the organic preparation department.

7.7. Calibration Standards (CS1 through CS5)

7.7.1. High-Resolution Concentration Calibration Solutions (Table 5) – Combine the spiking solutions in sections 7.4 through 7.6 to produce the five tetradecane calibration solutions listed in Table 5. These solutions permit the relative response to be measured as a function of concentration.

7.7.1.1. The CS3 (midpoint) standard is routinely used for calibration verification (Note: any other calibration point within the lower or upper calibration solution may be used for calibration verification).

7.7.1.2. Store the calibration solutions in appropriate containers and at room temperature in the dark.

8. SAMPLE COLLECTION, PRESERVATION, SHIPMENT AND STORAGE

8.1. The sample collection, shipping, handling, and chain-of-custody procedures are not described in this document. Sample collection personnel will, to the extent possible, homogenize samples in the field before filling the sample containers. This should minimize or eliminate the necessity for sample homogenization in the laboratory.

8.2. Samples are collected in amber glass containers following conventional sampling practices (Method 1613). Freely flowing aqueous samples are collected in refrigeration bottles using automatic sampling equipment. Solid samples are collected as grab samples using wide mouth jars.

8.3. Samples are stored at 0-4ºC in the dark from the time of collection until extraction (fish tissues must be stored at - 20°C).

8.3.1. A measurement of residual chlorine is performed using Standard Methods 4500-Cl B, C, D, E, F, or G. The residual chlorine will be checked at the laboratory for all aqueous samples. If residual chlorine is present in aqueous samples, the sampler or analyst adds 80mg of sodium thiosulfate per liter of water.

8.4. Sample extraction is performed within 365 days of sampling. Sample analysis is performed within forty (40) days of extraction.

9. QUALITY CONTROL

9.1. Batches are defined at the sample preparation step. Batches should be kept together through the whole analytical process as far as possible, but it is not mandatory to analyze prepared extracts on the same instrument or in the same sequence. Refer to the QC program document (QA-003-SAC) for further details of the batch definition.

9.1.1. The quality control batch is a set of up to 20 samples of the same matrix processed using the same procedure and reagents within the same time period. The quality control batch must contain a laboratory control sample (LCS) and a method blank (MB). Laboratory generated QC samples (MB, LCS, MS/MSD) do not count toward the maximum 20 samples in a batch. Field QC samples are included in the batch count. In some cases, at client request, the MS/MSD may be replaced with a matrix spike and sample duplicate. If insufficient sample is available for an MS/MSD and batch specific precision is required, an LCSD may be substituted. In the event that multiple MS/MSDs are run with a batch due to client requirements, the additional MS/MSDs do not count toward the maximum 20 samples in a batch.

9.2. One method blank must be extracted with every process batch of similar matrix, not to exceed twenty (20) samples. For aqueous samples, the method blank is an aliquot of laboratory reagent water. Use Ottawa sand as the method laboratory matrix when solids are extracted. Use a mixture of Ottawa sand and canola oil as the matrix when tissues are extracted. Take the method blank through all steps detailed in the analytical procedure. The method blank is processed in the same manner and at the same time as the associated samples. Corrective actions must be documented on a non-conformance memo (NCM), then implemented when target analytes are detected in the method blank above the reporting limit or when surrogate or internal standard recoveries are outside of the control limits. Re-extraction of the blank, other batch QC, and the affected samples are required when the method blank is deemed unacceptable. See policy QA-003-SAC for specific acceptance criteria.

9.2.1. The method blank must not contain any analyte at or above the reporting limit, or at or above 10% of the measured concentration of that analyte in the associated samples, whichever is higher.

9.2.2. If there is no target analyte greater than the RL in the samples associated with an unacceptable method blank, the data may be reported with qualifiers. Such action should be taken in consultation with the client.

9.2.3. Projects performed under the auspices of the DoD QSM or AFCEE must meet DoD-specific criteria for method blanks. Results are acceptable if the blank contamination is less than ½ of the reporting limit for each analyte, or less than 1/10 of the regulatory limit, or less than 1/10 of the sample result for the same analyte, whichever is greater. If the method blank does not meet the acceptance criteria, the source of contamination must be investigated and

measures taken to correct, minimize or eliminate the problem. If contamination remains, the contaminated samples should be re-prepared and reanalyzed with a new MB and batch-specific QC samples.

9.2.4. If method blank contamination is present, check solvents, reagents, fortification solutions, apparatus and glassware to locate and eliminate the source of contamination before any further samples are extracted and analyzed.

9.2.4.1. OCDD is a ubiquitous laboratory contaminant.

9.2.4.2. A method blank and the associated samples are deemed acceptable if the OCDD concentration is less than 5 times the specified reporting limit.

9.2.4.3. If the OCDD is greater than 5 times the specified limit, flag data appropriately.

9.2.4.4. The analyst is expected to investigate and eliminate potential sources of systematic contamination.

9.2.4.5. If a target analyte is detected in the blank but the associated samples are ND (not detected), then the data may be reported, unless otherwise directed by the client. Note the action in the narrative.

9.2.4.6. If a target analyte is detected in the blank, but the concentration of the contaminant in the samples is greater than 10 times the blank concentration, then the data may be reported, unless otherwise directed by the client. Note the action in the narrative.

9.2.4.7. Method blank contamination of non-target analytes (i.e., non-2,3,7,8-substituted isomers) does not require corrective action, but a non-conformance memo is generated explaining the contamination and impact on sample data. “Totals” concentrations are not flagged to reflect blank contamination because totals are considered estimated values.

9.2.4.8. If the method blank is contaminated with any 2,3,7,8-substituted target analyte above the lower calibration limit (other than the exception noted above for OCDD), and the associated sample contains a positive result for that same analyte above the LCL and less than 10 times the blank concentration. Re-extraction of the associated sample is required, unless otherwise stipulated by the client, where the occurrence shall be documented in the non-conformance memo.

9.2.5. If new batches of reagents or solvents contain interfering contaminants, purify or discard them.

9.3. A Laboratory Control Sample (LCS) must be extracted with every process batch of similar matrix, not to exceed twenty (20) environmental samples. The LCS is an aliquot of laboratory matrix (e.g. water, Ottawa sand, sodium sulfate, etc.) spiked prior to extraction with analytes of known identity and concentration. The LCS must be processed in the same manner and at the same time as the associated samples.

9.3.1. Corrective actions must be documented on a Non-Conformance memo, then implemented when recoveries of any spiked analyte is outside control limits provided on the LIMS or by the client. Limits for Method 1613B are defined by the method, and are listed in Table 9.

9.3.2. Re-extraction of the blank, other batch QC and all associated samples are required if the LCS is deemed unacceptable.

9.3.2.1. Limits for Method 1613B are defined by the method, and are listed in Table 9. Control charts are evaluated per QA-003-SAC to assure these limits are met.

9.3.3. A LCS is deemed acceptable if control analytes are above control limits and the associated samples are non detect, unless otherwise specified by the client. Note any actions in the narrative.

9.3.4. For drinking water samples for the State of Arizona, a second LCS spiked at the method reporting limit must be prepared. For clarity it will be named the Laboratory Fortified Blank (LFB). One LFB must be prepared for each day drinking water samples are extracted for the State of Arizona. All compounds in the LFB must have a recovery between 50-150%.

9.4. The assessment of matrix effects on method performance, as required by NELAP, is met in Method 1613, as in all isotope dilution techniques, with the use of isotopically labeled compounds.

9.4.1. These isotopically labeled compounds are analogs of target analytes and are spiked into each sample. Therefore, matrix effects on method performance can be judged by the recovery of these analogs. Sample analysis acceptance is controlled by the performance of these analogs in each sample.

9.4.2. A Matrix Spike/Matrix Spike Duplicate (MS/MSD or MS/SD) pair is extracted at the client's request only and is not required by Method 1613B. An MS/MSD pair are aliquots of a selected field sample spiked with analytes of known identity and concentration. The MS/MSD are also spiked prior to extraction with the same $^{13}C_{12}$-labeled internal standards as the method blank,

laboratory control sample, and field samples. The MS/MSD pair shall be processed in the same manner and at the same time as the associated samples.

9.4.2.1. The results obtained from the MS and MSD samples (percent recovery and concentrations of 2,3,7,8-substituted PCDDs/PCDFs) shall agree within 50 percent relative difference. Report all results, flag any outliers, and file a non-conformance memo for any outliers. Re-extraction is not required when a MS/MSD pair fail to meet one or more QC criteria.

9.4.2.1.1. A LCS is extracted to show precision of the extraction and analysis process. (An LCS/LCSD pair may be requested by the client, in which case, these usually replace requests for an MS/MSD pair)

9.5. An Instrument Blank must be evaluated after calibration standards are injected and before sample analysis may begin. This may be accomplished by analysis of a method blank. If a method blank is not available, an instrument blank must be analyzed.

9.5.1. An instrument blanks consists of solvent (isooctane, toluene, or tetradecane). It is evaluated by inspection for contamination that may affect sample analysis.

9.6. Internal standard recoveries are flagged if they are outside the recovery goals. Quantitation by isotope dilution generally precludes any adverse effect on data quality due to internal standard recoveries being outside QC limits as long as the signal-to-noise is greater than 10:1.

9.6.1. Evaluate data quality for usability, flag and submit a non-conformance memo for any analytes outside of the recovery criteria, and report if data is deemed not adversely effected.

9.6.2. Re-extraction of samples should be performed if signal-to-noise for any internal standard is less than 10:1 or if internal standard recoveries fall below 10%.

9.6.2.1. Re-extraction may be necessary under other circumstances when data quality has been determined to be adversely affected.

9.7. Duplicates – Upon client request, duplicates may be processed. A duplicate injection of a sample extract may be performed at the clients request to display instrument precision. The results of the laboratory duplicates (percent recovery and concentrations of 2,3,7,8-substituted PCDD/PCDF compounds) should agree within 50 percent

relative difference. Report all results and flag any outliers, re-extraction is not required when RPD limits are not met.

9.8. Field Blanks – Each batch of samples may contain a field blank sample of nominally uncontaminated soil, sediment or water that is to be processed for analysis. Treat this sample as all others.

9.9. Rinsate Samples – In addition to the field blank, a batch of samples may include a rinsate, which is a portion of the solvent (usually trichloroethylene) that was used to rinse sampling equipment. The rinsate is analyzed to assure that the samples were not contaminated by the sampling equipment. The rinsate sample must be processed like a regular sample.

9.10. Recommended Corrective Actions and Troubleshooting Steps

9.10.1. Verify satisfactory instrument performance.

9.10.2. If possible, verify that no error was made while weighing the sample portions.

9.10.3. Review the analytical procedures with the performing laboratory personnel.

10. CALIBRATION AND STANDARDIZATION

10.1. Two types of calibration procedures are required.

10.1.1. One type***, initial calibration***, is required before any samples are analyzed and is required intermittently throughout sample analysis as indicated by the results of the continuing calibration procedures described below.

10.1.2. The other type, ***continuing calibration***, consists of analyzing the column performance check solution and a calibration solution (typically CS3). No samples are to be analyzed until acceptable calibration is demonstrated in sections 10.6 and 10.7.

10.2. The following GC operating conditions are typically used:

DB-5 Column
Injector temp: 280ºC
Interface temp: 280 ºC
Initial temp and time: 190 ºC, 1 min
Temp program: 190-240ºC at 4 ºC/min
240ºC for 16 min
240-320 ºC at 20 ºC/min
320 ºC for 10 min

DB-225 Column
Injector temp: 240ºC
Interface temp: 240ºC
Initial temp and time: 190ºC, 1 min
Temp program: 190-240ºC at 3.5ºC/min
240ºC for 20 min

10.2.1. For South Carolina samples, the retentiontime of ^{13}C-1,2,3,4-TCDD must exceed 25 minutes on the DB-5 column and 15 minutes on the DB-225 column.

Method 1613 suggests the following as a temperature program that can be used to meet these criteria:

DB-5 Column
Injector temp: 270ºC
Interface temp: 290 ºC
Initial temp and time: 200 ºC, 2 min
Temp program: 200-220ºC at 5 ºC/min
220ºC for 16 min
220-235 ºC at 5 ºC/min
235ºC for 7 min
235-330°C at 5°C/min

NOTE: All portions of the column, which connect the GC to the ion source, remain at the interface temperature specified above during analysis, to preclude condensation of less volatile compounds.

10.3. Mass spectrometer (MS) resolution - tune the mass spectrometer to achieve a minimum resolving power of 10,000 (at 10 percent of peak height) at m/z 304.9824 (PFK). Other masses monitored but not required by the method are as follows:

Function 1: *[292.98245], [318.97925], [330.97925], [342.97925], [354.97925], [366.97925], [380.97604], [392.97604], [404.97604], [416.97604]*

Function 2: *[330.97925], [342.97925], [354.97925], [366.97925], [380.97604], [392.97604], [404.97604], [416.97604]*

Function 3: *[366.97925], [380.97604], [392.97604], [404.97604], [416.97604], [430.97284], [442.97284], [454.97284]*

Function 4: *[404.97604], [416.97604], [430.97284], [442.97284], [454.97284], [466.97284], [480.96967]*

Function 5: *[430.97284], [442.97284], [454.97284], [466.97284], [480.96967], [492.96967], [504.96967], [516.96967]*

While in peak examine mode, print the peak profile display for all functions required, demonstrating that this minimum resolution criterion has been met.

10.3.1. Operate the mass spectrometer in mass drift correction mode.

10.3.1.1. A lock-mass ion from the reference compound PFK (perflourokerosene) is used to correct for mass drift in each group of masses (function) in the mass spectrometer experiment.

10.3.1.2. Excessive variations of the lock-mass can indicate the presence of coeluting interferences, which may significantly reduce the sensitivity of the mass spectrometer.

10.3.1.3. Re-extraction of a smaller aliquot or dilution of the original extract may be required to reduce these interferences to an acceptable level.

NOTE: Excessive PFK may cause elevated noise levels and a dirty ion source.

For the following injections, use the GC conditions specified in section 10.2 above.

10.3.2. Monitor each group (function) of masses (see Table 10) in succession as a function of retention time to ensure that all PCDDs and PCDFs are detected.

10.3.2.1. Inject 1-2 µL of concentrated sample extract (containing recovery standards) or standard solution using spitless injection.

10.3.2.2. Start GC isothermal hold and temperature program immediately upon injection.

10.3.2.3. Start MS data collection after the solvent peak has eluted.

10.3.2.4. At the end of the temperature program, (after the octachloro-dibenzodioxin and dibenzofuran have eluted), return the GC to the initial temperature for analysis of the next sample or standard.

10.4. Retention time windows

10.4.1. Analyze a 1-2 µL of the window defining mixture (WDM) to demonstrate that the GC/MS experiment is monitoring the masses for each PCDD and PCDF chlorination level from the retention time of the first eluting isomer until that of the last eluter.

10.4.2. Isomer specificity; Analyze the isomer specificity test standard (the CPSM).

10.4.2.1. This standard solution has been combined with the window defining mixture so that both parameters can be checked with a single GC/MS injection.

10.4.2.2. Compute the percent valley between the GC peaks that elute most closely to 2,3,7,8-TCDD and TCDF on their respective columns.

10.4.2.3. Verify that the height of the valley between the most closely eluted isomers and the 2,3,7,8-isomers does not exceed 25 percent of the height of the latter.

10.4.2.3.1. If this criterion is not met, GC maintenance will likely be necessary.

10.4.2.4. **NOTE**: The CPSM/WDM is required prior to sample analysis, but need not be acquired prior to the ICAL and is not provided as part of the ICAL standards package.

10.5. Initial Calibration

10.5.1. A five-point calibration curve encompassing the concentration range is used for each compound to be determined (see Table 5).

10.5.2. To calibrate the analytical system, inject a 1-2 µL aliquot of each of the 5 calibration standards (CS-1 to CS-5; Table 5).

10.5.3. Print hardcopies of the mass chromatograms (masses listed in Table 9 and 13).

10.5.4. Verify that the signal-to-noise ratio (S/N) is greater than or equal to 10 for all PCDD/PCDF ions.

10.5.4.1. Generally the unlabeled TCDD/TCDF ions for solution CS-1 are the ones for which meeting this requirement can be difficult.

10.5.4.2. Reducing the level of PFK being bled into the source and attempting to retune the mass spectrometer for better sensitivity are two measures which often remedy low signal-to-noise ratio.

10.5.4.2.1. For Arizona samples, the level of PFK metered into the HRMS during analysis should be adjusted so that the amplitude of the most intense selected lock-mass m/z signal (regardless of the descriptor number) does not exceed 10% of the full-scale deflection for a given set of detector parameters.

10.5.5. Compute ion abundance ratios for the two ions monitored for each labeled compound and analyte; verify that these are within the limits given in Table 2.

10.5.6. Calculate the relative response factor (RRF) of each unlabeled compound vs. its internal standard, and of each internal standard vs. its recovery standard (Table 10).

10.5.6.1. Compute the mean RRF, standard deviation and percent compound.

10.5.6.2. If the relative standard deviation exceeds 20 percent for any native compound, or 30 percent for any labeled compound, the mean RRF may not be used.

10.5.6.2.1. The complete calibration curve for that compound may be used over the five point range in place of the mean RRF.

10.5.7. A relative response factor is calculated for each unlabeled PCDD/PCDF vs. its 13C-labeled recovery standard using the area responses of both the primary and secondary ions (specified in Table 9). These relative response factors are calculated as follows:

$$RRF = \frac{(A_{s1} + A_{s2})\, C_{IS}}{(A_{IS1} + A_{IS2})\, C_s}$$

Where:

A_{s1} and A_{s2} are the areas of the primary and secondary ions for the compound to be calibrated (NOTE: only one ion is used for $^{37}Cl_4$-2, 3 ,7, 8-TCDD).

A_{IS1} and A_{IS2} are the area of the primary and secondary ions for the internal standard (or recovery standard when an internal standard or cleanup recovery standard is being calibrated).

C_{IS} is the concentration of the internal standard (or recovery standard when an internal standard or cleanup recovery standard is being calibrated).

C_S is the concentration of the compound to be calibrated

10.6. Continuing Calibration:

At the beginning of each 12-hour shift during which samples are to be analyzed, GC/MS system performance and calibration are verified for all unlabeled and labeled compounds.

10.6.1. MS Resolution - A static resolving power of at least 10,000 (10 percent valley definition) must be demonstrated at appropriate masses before any analysis is performed.

10.6.1.1. Static resolving power checks are performed at the beginning and ending of each analytical sequence.

10.6.1.1.1. An analytical sequence is defined as from the time the instrument run is started until it is stopped.

10.6.1.1.2. Due to software limitations, an MS Resolution Check cannot be performed during an analytical sequence.

10.6.1.1.3. An analytical sequence may include one or more 12 hour periods during which samples are acquired.

10.6.1.2. The MS Resolution Check brackets all samples from the initial MS Resolution Check, during which time no instrument parameters are changed.

10.6.2. Analyze the CPSM/WDM mixture at the beginning of each 12-hour period to ensure that the retention time window and isomer specificity criteria are met.

10.6.2.1. This mixture can be analyzed either immediately before or immediately after the calibration verification standard.

10.6.2.2. In either case, inject an instrument blank or method blank (see Section 9.3 above) prior to analyzing samples. Note that the CPSM/WDM does not define the beginning of a 12-hour sample

acquisition period. The 12-hour sample acquisition period begins with the calibration verification standard (see below).

10.6.3. The CS-3 calibration standard ("VER Standard," Table 5) is analyzed and quantitated using the relative response factors calculated from the initial calibration.

10.6.4. The calculated concentration of each unlabeled and labeled compound is compared to the range given in the Table 9. If all of the following criteria are met, calibration has been verified:

10.6.4.1. Ion abundance ratios for all PCDDs and PCDFs are within the limits given in Table 2.

10.6.4.2. The peaks representing each unlabeled and labeled compound, calculated using averaged relative response factors (RRFs) from the initial calibration curve, is within the limits specified in Table 9.

10.6.4.3. If any of these criteria are not met, try retuning the mass spectrometer and reinjecting the VER Standard.

10.6.4.4. If each peak's S/N ratio does not meet 10:1, the instrument sensitivity is inadequate and needs attention. Note: filament replacement may solve this issue, otherwise, replacing the ion source with a clean one will probably be necessary.

10.6.4.5. If, after two or more injections, sensitivity of the mass spectrometer is adequate but the concentrations found in the VER Standard continue to fall outside the limits stated in Table 9, the initial calibration should be repeated, if no additional problem with the instrument can be found.

10.6.4.6. As a standard practice to increase efficiency, samples may have been analyzed before the Continuing Calibration Standard (CCV) has been checked.

10.6.4.6.1. If any CCV criteria or CPSM criteria is not met, review the sample data for usability. If there is no adverse impact to data quality, document using an NCM, and the data may be reported otherwise reinject. Perform corrective action before the next analytical sequence.

10.7. Retention times and GC resolution – The relative retention times of unlabeled and labeled PCDDs and PCDFs should be within the limits specified in Table 10. In

addition the absolute retention times of 13C12-1,2,3,4-TCDD and 13C12- 1,2,3,7,8,9-HxCDD internal standards must be within +/- 15 seconds of the retention time obtained during calibration.

11. PROCEDURE

11.1. HRGC/HRMS analysis

11.1.1. Analyze the sample extracts under the same instrument operating conditions used to perform the instrument calibration.

11.1.2. Record the analysis information in the instrument logbook. Peer review of each analytical sequence is required and must be documented with date and initials. Document and verify each of the following in the instrument logbook: Data File ID, Sample #, Sample ID, Final Volume, Method/Matrix, Sample Size, Units.

11.2. Ongoing precision and recovery – Analyze the extract of the diluted precision and recovery standard (PAR), known as the LCS. Calculate the concentration of each unlabeled and labeled PCDD and PCDF and compare it with the limits for ongoing accuracy in Table 9.

11.2.1. If all compounds meet acceptable criteria, system performance is acceptable. If, however, any individual concentration falls outside the range given, the associated sample set should be evaluated to determine whether there is adverse impact to data quality.

11.2.1.1. If data quality has been unaffected (for example, an LCS unlabeled analyte has a high percent recovery, but all associated samples are ND) anomalize using an NCM, and report the data.

11.2.1.2. If it is determined that data quality has been adversely affected (for example, in the LCS an unlabeled analyte has a high recovery and the associated samples are positive) re-extract the adversely affected samples.

11.2.2. LCS (OPR) samples (method blanks, spiked with unlabeled PCDDs and PCDFs) are run at the rate of one for every 20 samples extracted from a given matrix, or one per daily extraction batch of a given matrix. The LCS is usually prepared at a mid-level concentration. For drinking water samples a second LCS is prepared at the reporting limit concentration. To differentiate it this LCS is called the Laboratory Fortified Blank (LFB). One LFB is prepared for each day drinking water samples are extracted. All compounds in the LFB must have a recovery between 50-150%.

11.2.3. Results that fall within the OPR specifications in Table 9 are entered in the ongoing precision and recovery database for each compound in each matrix.

11.2.3.1. Update QC charts to form a graphical representation of continuing laboratory performance.

11.2.4. Blank – Analyze the method blank extract with each sample batch immediately following analysis of the LCS (OPR) aliquot as a preferred practice to demonstrate freedom from contamination and freedom from carryover from the LCS analysis. If the method blank is analyzed before the LCS aliquot, ensure that the instrument has demonstrated freedom from carryover with the instrument blank analyzed after the CCV (CS3) injection.

11.2.4.1. For South Carolina samples, any positive result in the method blank greater than 1/3 the reporting limit will be reported.

11.3. Qualitative identification: For a GC peak to be identified as a PCDD or PCDF (either an unlabeled or a labeled compound), it must meet all of the criteria below.

11.3.1. The signals for the two m/z's being monitored (See Table 10) must be present and must maximize within ± 2 seconds of each other.

11.3.2. The signal-to-noise (S/N) ratio of both the m/z's must be greater than or equal to 2.5 for a sample extract, and greater than or equal to 10 for a calibration standard.

11.3.3. The ratio of the integrated areas of the two exact m/z's monitored shall be within the specified limits (See Table 2) or within ±10% of the ratio in the midpoint (CS3) calibration.

11.3.4. The relative retention time (RRT) of the peaks for a 2,3,7,8-substituted PCDD or PCDF must be within the RRT limits (See Table 10). The retention time of peaks representing non 2,3,7,8-substituted PCDDs/PCDFs must be within the retention time windows established by the window defining mixture injected before sample analysis.

11.3.5. Confirmatory analysis—Any sample in which 2, 3, 7, 8-TCDF is identified must be confirmed on a DB-225 column, SP-2331, or equivalent GC column.

11.3.5.1. The operating conditions may be adjusted to optimize the analysis on the second GC column.

11.3.5.2. The GC/MS must meet the mass resolution and calibration specifications in Section 10.

11.3.6. No signal shall be observed in the corresponding PCDPE ion channel having a S/N ratio greater than 2.5 at the retention time of any presumptive PCDF.

11.3.6.1. Chemical interference, rather than an interfering PCDPE may cause a signal to be observed at the m/z of the corresponding DPE.

11.3.6.2. A professional analytical judgement is necessary to determine whether a particular unlabelled analyte peak should be deleted from the "total", or the 2,3,7,8 substituted set to a detection limit because of possible DPE interference.

11.3.6.3. Additionally, whether the peak in question should be qualified as a positive by a reporting flag ("JA"), or whether the peak should be counted as a positive with no qualification because no applicable interference is present.

11.4. Analysis of complex samples.

11.4.1. Some samples contain high levels (>10 ng/L; >1000 ng/kg) of the compounds of interest, interfering compounds, and/or polymeric materials. In the case of high levels of one or more analytes (such that the concentration in the extract exceeds the upper calibration limit and/or causes saturation of the MS detector), the extract is diluted with tetradecane to bring the concentration (s) of the analyte (s) in question below the limit of the detector and into the calibration range if possible.

11.4.2. If high levels of coextracted interfering compounds are a problem, a smaller aliquot of the sample is extracted and analyzed. As noted above, complex dilution may be required. The client will be contacted to determine whether or not they will require this procedure.

11.4.3. For internal standard recoveries outside the recommended recovery range the data should be evaluated for adverse impact. If no significant adverse impact was observed the data should be reported and an NCM filed.

11.4.3.1. For samples that may or are adversely impacted an additional aliquot of the original extract or diluted extract should be analyzed.

11.4.3.1.1. If the recoveries are still outside of the range for the re-injected extract and it is determined that significant adverse impact to data quality has occurred, the

sample(s) may be re-extracted, or reprocessed from an archive portion if available.

11.4.3.1.2. A smaller aliquot should be used for the re-extraction unless it is suspected that the recovery problem is not matrix related.

11.4.3.1.3. If the re-extracted sample(s) still does not meet the limits for labeled internal standard recovery, the data is evaluated for adverse impact and a NCM filed.

11.4.3.1.4. All recoveries outside of method criteria will be flagged. The best quality data is reported from one of the two extractions unless the client requests that both sets of data be reported.

11.4.4. Optional procedure for use in the analysis of 2,3,7,8-TCDF and/or 2,3,7,8-TCDD only.

11.4.4.1. 2,3,7,8-TCDD and/or 2,3,7,8-TCDF can either be analyzed by using the procedures above, but the sample spiking solution can be modified to include only the labeled and unlabeled analytes of interest. This can reduce the cost of the spiking standards used. If this procedure is used, the spiking mixes can be QC'd against the existing "full-list" calibration curve.

11.4.4.2. The spiking solutions, including stock and secondary standards, are modified such that only the unlabeled and labeled 2,3,7,8-TCDD and 2,3,7,8-TCDF analytes are added, including the ^{37}Cl-2,3,7,8-TCDD (Cleanup Recovery Standard) and ^{13}C-1,2,3,4-TCDD (Recovery Standard).

11.4.4.3. The silica column/alumina column cleanup (as described in WS-IDP-0007) may be optimized for TCDD and TCDF.

11.4.4.4. Carbon Column (as described in WS-IDP-0007) may be optimized for TCDD and TCDF.

11.4.4.5. The temperature program may be modified to optimize the GC run for separation of the TCDD and CDF isomers, and to shorten the run as appropriate.

11.4.4.6. All aspects of calibration and quantitation apply when they refer to the Tetra analytes and internal standards only.

11.5. Data review

11.5.1. The analyst who performs the initial data calculations must initial and date the front quantitation summary of the raw data for each sample (the CCVs or ICALs have separate specific checklists) to document that they have performed the qualitative and quantitative analysis on the sample/QC data.

11.5.2. When an entire project lot or batch is completed, a checklist representing the entire data package is completed. All manual integrations must be documented according the Manual Integration SOP, S-Q-004.

11.5.3. A second analyst must verify all qualitative peak identifications.

11.5.3.1. If discrepancies are found, the data should be returned to the analyst who performed the initial peak identification for resolution.

11.5.3.2. Any changes made directly by the reviewing analyst must be dated and initialed by the reviewing analyst.

11.5.4. All hand calculations and data entry into calculation programs, databases, or spreadsheets must be checked by a second analyst at a frequency of 100 percent.

11.5.4.1. If discrepancies are found, the data should be returned to the analyst who performed the initial calculation.

11.5.4.2. Any changes made directly by the reviewing analyst must be dated and initialed by the reviewing analyst.

11.5.5. Both the analyst who performed the initial qualitative and quantitative analysis and the analyst who performed the second level review must check all items on the data review checklist.

11.6. Common observations with “real world” sample data analysis:

11.6.1. If an ion ratio is outside ratio identification limits, but within the retention time window, the analyst, using professional judgement based on historical data or other samples within the sample lot, identify the peak in question as positive with an estimated concentration based on the theoretical ratio. The OpusQuan software will automatically adjust the ion areas to reflect the theoretical ion ratio based on the ion peak with the smallest area and then

quantitate an estimated concentration. The "JA" flag is used which states that the peak has been positively identified but the concentration is estimated. (Note: non 2,3,7,8 substituted totals peaks are not qualified)

11.6.1.1. The first eluting PeCDD isomer often has a chemical interference in the m/z 357.8516 ion causing the ion ratio to be outside the ratio identification window for PeCDDs.

11.6.1.1.1. If this peak is the only positive PeCDD identified for "total" PeCDD, the detection limit is elevated to reflect the estimated concentration and the total is "ND" at this value.

11.6.1.1.2. If there are other positive PeCDDs within the window, the isomer will be "JA" flagged as estimated on the totals summary sheet, and if the estimated concentration is above the TDL included in the "total" concentration. (Note that "totals" are always considered estimated and are not flagged on the final result sheet.) No NCM is required.

11.6.1.2. The 1,2,3,4,6,7,8-HpCDF isomer often has a chemical interference with the m/z 407.7818 ion that causes the ion ratio with m/z 410 to be outside the method limits.

11.6.1.2.1. Often, re-integration of the m/z 407.7818 ion is possible, but if this is not possible and the concentration is greater than the TDL, qualify the 1,2,3,4,6,7,8-HpCDF isomer as "positively identified, but estimated quantitation" using the "JA" qualifier because the quantitation is based on the theoretical ion ratio. A NCM observation is filed.

11.6.2. The following 2,3,7,8-substituted target analytes often require re-integration due to closely eluting non-2,3,7,8-substituted isomers on the DB-5 column. In all cases, the ^{13}C-labeled analog should be used to determine where the split between the isomers should occur.

11.6.2.1. 2,3,7,8-TCDD elutes just after the 1,2,3,7/1,2,3,8-TCDD elutes. Even though the DB-5 column is isomer specific for 2,3,7,8-TCDD, the software often integrates these isomers together when the 2,3,7,8-TCDD concentration is much less that that of the other isomer pair.

11.6.2.2. 1,2,3,4,7,8-HxCDF elutes just after the 1,2,3,4,6,7-HxCDF isomer; 2,3,4,6,7,8-HxCDF elutes just after the 1,2,3,6,8,9-HxCDF isomer, and 1,2,3,7,8,9-HxCDF elutes just prior to the 1,2,3,4,8,9-HxCDF isomer.

11.6.2.3. 1,2,3,7,8,9-HxCDD elutes just after the 1,2,3,4,6,7-HxCDD isomer.

11.6.3. Biological samples often exhibit a typical Diphenyl Ether pattern, while Incineration Ash samples often exhibit chemical interference in the DPE traces that does not contribute ions to the native furans.

12. CALCULATIONS/DATA REDUCTION

12.1. Isotope dilution: By adding a known amount of a labeled compound to every sample prior to extraction, correction for recovery of the unlabeled compound can be determined. The correction for the unlabeled compound can be made because the unlabeled compound and its labeled analog exhibit similar effects upon extraction, cleanups, concentration, and gas chromatography mass spectrometry. Relative response factors (RRF) values are used in conjunction with calibration data described in Section 10 to determine concentration directly, using the following equation:

$$C_n = \frac{(A_{n1} + A_{n2}) \times C_{IS}}{(A_{IS1} + A_{IS2}) \times RRF_n \times Vol}$$

Where:

C_n is the concentration of the unlabeled compound in the extract.

A_n is the area of the native in the lighter mass (1) and heavier mass (2).

C_{is} is the concentration of the internal standard.

RRF_n is the relative response factor from the calibration curve for that compound.

Vol is the sample size used for the extraction and/or cleanups (in milliliters, liters, grams, or extract.

12.1.1. Reporting conventions are as follows:

12.1.1.1. Aqueous results in pg/L (parts per quadrillion);

12.1.1.2. Solid results (soils, sediment, filter cake, compost, waste, etc) in pg/g or ng/kg (parts per trillion);

12.1.1.2.1. Solid samples may be reported on a dry weight basis by reporting and correcting for percent solids.

12.1.1.3. Extracts or filters in pg/sample or pg/extract (parts per quadrillion).

12.1.1.4. Tissue sample results in pg/g or ng/kg of wet tissue, not on the basis of the lipid content of the sample. Report the percent lipid content if requested.

12.1.2. Because of a potential interference, the labeled analog of OCDF is not added to the sample. Therefore, this unlabeled analyte is quantitated against the labeled OCDD. As a result, the concentration of unlabeled OCDF is corrected by the recovery of the labeled OCDD.

12.1.2.1. In instances where OCDD and OCDF behave differently during sample extraction, concentration, and cleanup procedures, a decrease in the accuracy of OCDF may result. However, given the low toxicity of this compound relative to other dioxins and furans, the potential decrease in accuracy is not considered significant.

12.1.3. Because the labeled analog of 1,2,3,7, 8, 9-HxCDD is used as a recovery standard (i.e. not added before extraction of the sample), it cannot be used to quantitate the unlabeled compound by strict isotope dilution procedures.

12.1.3.1. The unlabeled 1,2,3,7,8,9-HxCDD is quantitated using the averages of the responses of the labeled analogs of the other two 2,3,7,8-substituted HxCDD's, 1, 2, 3, 4, 7, 8-HxCDD and 1, 2, 3, 6, 7, 8-HxCDD. As a result, the concentration of the unlabeled 1, 2, 3, 7, 8, 9-HxCDD is corrected for by the average recovery of the other two HxCDD internal standards.

12.1.4. Any peaks representing non-2, 3,7,8-substituted dioxins or furans are quantitated using an average of the response factors from all of the 2,3,7,8-isomers in the same level of chlorination.

12.1.5. Report results at or above the minimum level (also known as the Lower Calibration Limit – See Table 6).

12.1.6. Report results below the minimum level as not detected. Some clients or regulatory agencies require sample/analyte specific estimated detection limits. If these are required, there is a three-tiered approach to reporting and detection limits.

12.1.6.1. In the absence of target analytes, a sample specific estimated detection limit (EDL) is calculated based on signal-to-noise (S/N) ratios at the retention time of the target analyte.

12.1.6.1.1. The target analyte is then reported as "not detected" at the EDL.

12.1.6.2. When target analytes meet method identification criteria and are free of interferences, they are reported as unqualified positives down to the lowest calibration standard concentration (the LCL, See Table 5).

12.1.6.2.1. Below the lower calibration limit, qualitatively confirmed analytes are reported as "estimated" down to the target detection limit (TDL).

12.1.6.2.2. To denote the less certain quantitation the value is "J" flagged as estimated.

12.1.6.3. The TDL is a value set by the lab at which there is no significant chance of a false positive (usually set at ½ the LCL value).

12.1.6.3.1. If there is a peak below the TDL, a detection limit based on the ion peaks is calculated and the target analyte is reported as "not detected" at the calculated detection limit.

12.1.6.3.2. Second column confirmation will be performed only for 2,3,7,8-TCDF presumptive positives greater than the TDL (Note: "Totals" peaks, i.e. non-2,3,7,8-substituted isomers are not considered target analytes, but are identified using the above criteria. "Totals" concentrations are always considered estimated and are never flagged.)

12.1.7. If the concentration of any target analyte exceeds the upper calibration range of the initial calibration curve, but does not saturate the instrument detector, the analyte is qualified by the "E" flag and an NCM is submitted. ("Totals" concentrations are always considered as estimates and are not flagged.)

12.1.7.1. Historical data indicates that for the isotope dilution method, dilution and re-injection will not produce significantly different results from those reported with the "E" qualifier.

12.1.7.2. Clients may request dilution and re-injection to bring target compounds within the calibration range. (Note: dilution of an extract to bring target compounds within range also dilutes the internal standards which may adversely impact the data).

12.1.8. When target analyte peaks saturate the detector, TestAmerica West Sacramento will provide one dilution to bring the response below the saturation level and/or the upper calibration level as part of the initial analysis cost.

12.1.8.1. Additional dilutions or re-extraction at a smaller sample aliquot will be performed at client request only. (Note: Complex dilution is one where the pre-spiked internal standards are diluted out and must be re-added to the extract. The sample analyte concentrations are then calculated using an internal standard method and all results from this dilution are therefore estimated.)

12.1.9. Results for samples that required dilution may be reported from more than one injection. For example, some analyte results may be reported from the original injection, while others are taken from the dilution.

12.1.9.1. Isomers reported from a dilution shall be qualified with a "D" qualifier, or narrated if all or most of the congeners are reported from the dilution analysis. (Note: Dilution will not always eliminate the "E" flag qualifier.)

12.1.10. The total concentration in each level of chlorination is the sum of the concentrations of all isomers identified in that level greater than the target detection limit, including any non-2,3,7,8-substituted isomers, which elute within the CPSM window.

12.1.10.1. The total concentration is calculated by the OpusQuan software as follows: The total area of 2,3,7,8-substituted isomers is subtracted from the total area of all isomers to get a non-2,3,7,8 substituted total area. A non-2,3,7,8-total concentration is then calculated using the average RRF value. The 2,3,7,8-substituted isomer concentrations are added to the non-2,3,7,8-total concentration to get a "actual" total for all isomers.

12.1.11. Results are reported to two significant figures. For aqueous samples, the units are pg/L. For solid samples (soils, sludges, sediments, etc) the units are pg/g.

12.2. Internal standard : Compute the concentrations of the ^{13}C-labeled analogs and the ^{37}Cl-labeled cleanup standard in the extract using the response factors determined from calibration curve and the following equation:

$$C_{IS} = \frac{(A_{IS1} + A_{IS2}) \times Q_{RS}}{(A_{RS1} + A_{RS2}) \times RRF_{IS}}$$

Where:

C_{is} is the concentration of the internal standard in the extract (pg/g, pg/L)

A_{is} the area of the internal standard in the lighter mass (1) and the heavier mass (2).

A_{rs} is the area of the recovery standard in the lighter mass (1) and heavier mass (2).

Q_{rs} is the amount of recovery standard spiked.

RRF_{is} is the response of the internal standard relative to the response of the recovery standard in the initial calibration curve.

12.3. Calculate the internal standard percent recovery using the following equation:

$$\%\,\mathrm{Recovery} = \frac{C_{IS}}{Amount\ Spiked} \times 100$$

(Note: There is only one m/z for the ^{37}Cl-labeled standard.)

13. METHOD PERFORMANCE

13.1. Method Detection Limit

Each laboratory must generate a valid method detection limit for each analyte of interest. The MDL must be below the reporting limit for each analyte. The procedure for determination of the method detection limit is given in 40 CFR Part 136, Appendix B, and further defined in QA Policy #: CA-Q-S-006 and SAC-QA-0006. MDLs are available in the Quality Assurance department.

13.2. The group/team leader has the responsibility to ensure that this procedure is performed by an associate, who has been properly trained in its use and has the required experience.

13.3. Method validation information (where applicable) in the form of laboratory demonstrations of capabilities is maintained for this method in the laboratory QC files.

13.4. The laboratory operates a formal quality assurance program. The minimum requirements of this program consist of an initial demonstration of capability (IDOC), analysis of samples spiked with compounds to evaluate and document data quality, and analysis of standards and blanks as tests of continued performance.

13.4.1. The analyst shall make an initial demonstration of the ability to generate acceptable accuracy and precision by this method. This ability is established by generating four laboratory control samples that meet recovery criteria. For each alternative sample matrix, four aliquots of the alternative reference matrix are used.

13.5. The laboratory must make a one time initial demonstration of capability for each individual method. Demonstrations of capability for both solid and aqueous matrices are required. This requires analysis of QC check samples containing all of the standard analytes for the method.

13.5.1. Four aliquots of the QC check samples are analyzed using the same procedure used to analyze samples, including sample preparation. The concentration of the QC check sample should be equivalent to a mid-level calibration.

13.5.2. Calculate the average recovery and standard deviation of the recovery for each analyte of interest. Compare these results with the acceptance criteria in Table 9.

13.5.3. If any analyte does not meet the acceptance criteria, then the test must be repeated. Only those analytes that did not meet criteria in the first test need to be evaluated. Repeated failure for any analyte indicates the need for the laboratory to evaluate the analytical procedure and take corrective action.

13.5.4. In recognition of advances that are occurring in analytical technology, and to allow the analyst to overcome sample matrix interferences, the analyst is permitted certain options to improve separations or lower costs of measurements. These options include alternate extraction, concentration, cleanup procedures, and changes in columns and detectors. Unique changes are to be documented using a non-conformance memo. Permanent modifications or additions should be documented using an addendum to this SOP.

14. POLLUTION CONTROL

It is TestAmerica policy to evaluate each method and look for opportunities to minimize waste generated (i.e. examine recycling options, ordering chemicals based on quantity needed, preparation of reagents based on anticipated usage and reagent stability). Employees must abide by the policies in Section 13 of the Corporate Environmental Health and Safety Manual (CW-E-M-001) for "Waste Management and Pollution Prevention."

14.1. Standards should be prepared in volumes consistent with laboratory use to minimize the volume of expired standards that must be discarded.

15. WASTE MANAGEMENT

Waste management practices are conducted consistent with all applicable rules and regulations. Excess reagents, samples and method process wastes are disposed of in an accepted manner. Waste description rules and land disposal restrictions are followed. Waste disposal procedures are incorporated by reference to WS-EHS-0001. The following waste streams are produced when this method is carried out.

15.1. Autovials contaminated with methylene chloride, toluene, tetradecane and other solvents. As the autovials are removed from the instrument after analysis, they are stored in vial files in the instrument lab for at least ninety days, depending on client requirements. After at least ninety days, the vial files are transferred to the waste disposal area where they are drummed and shipped as PCB waste after no more than 90 days.

16. REFERENCES/CROSS-REFERNCES

16.1. EPA Method 1613, Revision A, October 1990.

16.2. EPA Method 1613, Revision B, October 1994.

16.3. Federal Register, 40 CFR Part 136, Guidelines Establishing Test Procedures for the Analysis of Pollutants; EPA Method 1613, Final Rule, 10/1994, NTIS PB95-104774.

17. METHOD MODIFICATIONS

17.1. Deviations from referenced method:

17.1.1. Section 10.2.4 of Method 1613 reads "The absolute retention time of ^{13}C-1,2,3,4-TCDD shall exceed 25.0 minutes on the DB-5 column, and the retention time of ^{13}C-1,2,3,4-TCDD shall exceed 15.0 minutes on the DB-225 column; otherwise the GC temperature program shall be adjusted and this test repeated until the above-stated minimum retention time criteria are met." Our retention time on both columns deviate from the above method, but using section 1.5 of Method 1613 "the analyst is permitted to modify the method to lower the cost of measurements, provided that all performance criteria in this method are met," we have modified the GC program to provide a shorter run time while still meeting method performance criteria thus lowering the cost of analysis.

17.1.2. Section 10.2.1.2 of Method 1613 reads "The lock-mass for each group of m/z's shall be monitored and shall not vary by more than ±20% throughout its respective retention time window." Data is evaluated on a sample by sample basis to establish whether the lock-mass deviations have adversely affected data quality. "Totals" are always considered estimated values, so lock-mass dips effecting a non-2,3,7,8-substituted isomer may be considered inconsequential. If a target 2,3,7,8-substituted isomer is adversely effected by a lock-mass deviation the sample may be diluted and re-injected or re-injected on a different instrument.

17.1.3. Section 10.1.2.1 of Method 1613 reads "The level of PFK metered into the HRMS during analysis should be adjusted so that the amplitude of the most intense selected lock-mass m/z signal (regardless of the descriptor number) does not exceed 10% of the full-scale deflection for a given set of detector parameters." The qualifier "should" indicates that action is suggested but not required (see Section 24.0 of Method 1613). The exception to this is state of Arizona drinking water samples. For Arizona drinking water samples, following section 10.1.2.1 is required.

17.1.4. Section 15.2 of Method 1613 reads "Static resolving power checks must be performed at the beginning and at the end of each 12-hour shift." The instruments currently in use are not capable of performing a resolution check while an acquisition is being performed. To optimize performance and lower costs, instruments are set up to acquire over 24-hours (or more). A resolution check is taken before the acquisition is started.

17.1.5. Section 17.6.1.4.2 of Method 1613 reads "Blanks – report results above one-third the method limit." We report blanks using the same criteria as that used for samples.

17.1.6. Section 17.6.2 of Method 1613 reads "Results for the PCDDs/PCDFs in samples that have been diluted are reported at the least dilute level at which the areas at the quantitation m/z's are within the calibration range." Data quality is always taken into account. Every effort is made to accommodate

this method suggestion, but exceptions may occur when actual data results are analyzed.

17.1.7. Section 18.3 of Method 1613 reads "Chlorodiphenyl Ethers – If chromatographic peaks are detected at the retention time of any PCDDs/PCDFs in any of the m/z channels being monitored for the chlordiphenyl ethers, cleanup procedures must be employed until these interferences are removed." Chlorodiphenyl Ethers (DPE) peaks will only interfere with PCDFs, so references to PCDDs are not applicable. PCDF data is analyzed to determine whether DPE interference is present. If DPE peaks are present at –2 to +2 seconds from the retention time of a peak in a PCDF trace, that peak is eliminated from the "total" concentration when there are other positive PCDFs present without DPE interference. Otherwise, these DPE interference peaks are taken into consideration when determining a "total" detection limit.

18. ATTACHMENTS

18.1. Tables or figures referenced in body of SOP.

18.1.1. Compound Structure

18.1.2. Table 1 - Isomers of Chlorinated Dioxins and Furans

18.1.3. Table 2 - Theoretical Ion Abundance Ratios and QC Limits

18.1.4. Table 3 - The Seventeen 2,3,7,8-Substituted PCDD and PCDF Congeners

18.1.5. Table 4 – Concentration of Stock and Spiking Solutions

18.1.6. Table 5 - Concentrations of Calibration Solutions

18.1.7. Table 6 – GC Retention Time Window Defining Test

18.1.8. Table 7 - List of CDDs/CDFs Determined by ID/IS/HRGC/HRMS

18.1.9. Table 8 – Retention Time Reference, Relative Retention Time

18.1.10. Table 9 – Acceptance Criteria for Performance Test

18.1.11. Table 10 – Descriptors, Exact m/z's

19. REVISON HISTORY

19.1. WS-ID-0007, Revision 3.1, 4/11/2008

19.1.1. Added procedural rules for South Carolina samples.

19.1.1.1. Affected sections: 4.4.1, 10.2.1, 11.2.4.1, 17.1.4

19.1.2. Updated reference methods for residual chlorine, Section 8.3.1.

19.1.3. Corrected order of analytes listed in Table 9.

19.1.4. Updated EH&S information per corporate guidelines.

19.2. WS-ID-0007, Revision 3, 08/17/07

19.2.1. The SOP format was updated to TestAmerica format.

19.2.2. Sample preparation was removed to a separate SOP WS-IDP-0007.

19.2.3. Added Laboratory Fortified Blank for Arizona drinking water samples (Section 9.4.4).

19.2.4. Set PFK limit for Arizona samples (Section 10.5.4.2.1).

19.2.5. Updated retention time criteria (Section 10.7).

19.3. SAC-ID-0007, Revision 2, 12/10/02

19.3.1. Use Ottawa sand for soil blanks, and Ottawa sand and canola oil for tissue blanks.

19.3.2. Add DOD QSM blank requirements.

19.3.3. Add residual chlorine check requirement.

19.3.4. Clarify mass resolution checks and mass functions.

19.4. LM-CAL-3066, Revision 1.

Figure 1
Structure of Dibenzodioxin and Dibenzofuran

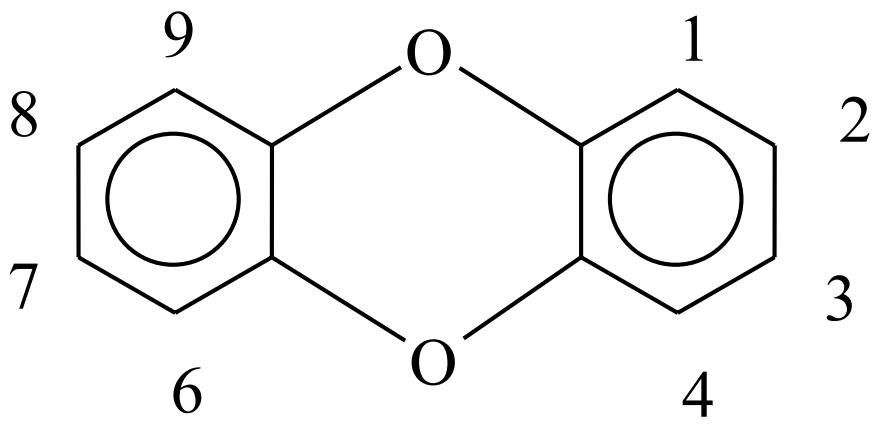

Dibenzodioxin

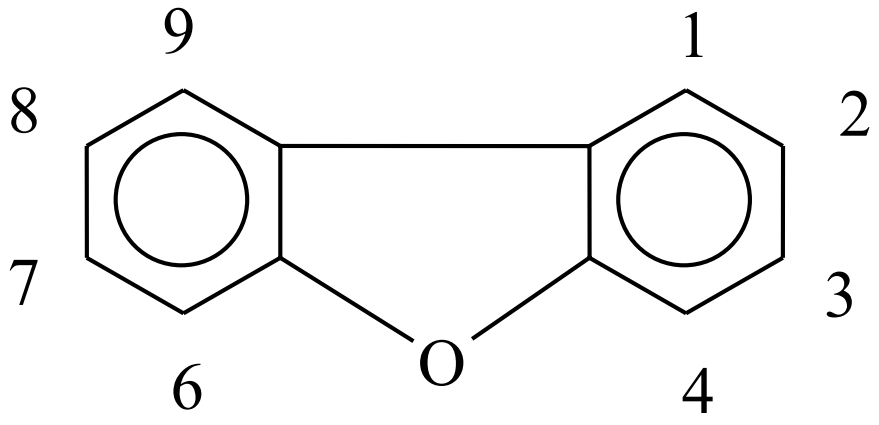

Dibenzofuran

Table 1: Isomers of Chlorinated Dioxins and Furans as a Function of the Number of Chlorine Atoms

# of Chlorine Atoms	# of Dioxin Isomers	# of 2,3,7,8 Isomers	# of Furan Isomers	# of 2,3,7,8 Isomers
1	2	---	4	---
2	10	---	16	---
3	14	---	28	---
4	22	1	38	1
5	14	1	28	2
6	10	3	16	4
7	2	1	4	2
8	1	1	1	1
Total	**75**	**7**	**135**	**10**

Table 2: Theoretical Ion Abundance Ratios and QC Limits

# of Chlorine Atoms	Ion Type	Theoretical Ratio	Control Limits(1)	
			Lower	Upper
4(2)	M / M+2	0.77	0.65	0.89
5	M+2 / M+4	1.55	1.32	1.78
6	M+2 / M+4	1.24	1.05	1.43
6(3)	M / M+2	0.51	0.43	0.59
7(4)	M / M+2	0.44	0.37	0.51
7	M+2 / M+4	1.04	0.88	1.20
8	M+2 / M+4	0.89	0.76	1.02

(1) QC limits represent 15% windows around the theoretical ion abundance ratios.
(2) Does not apply to $^{37}Cl_4$-2,3,7,8-TCDD (Cleanup Recovery Standard).
(3) Used for $^{13}C_{12}$-HxCDF only.
(4) Used for $^{13}C_{12}$-HpCDF only.

Table 3: The Seventeen 2,3,7,8-Substituted PCDD and PCDF Congeners

PCDD	PCDF
2,3,7,8-TCDD(*)	2,3,7,8-TCDF(*)
1,2,3,7,8-PeCDD(*)	1,2,3,7,8-PeCDD(*)
1,2,3,6,7,8-HxCDD(*)	2,3,4,7,8-PeCDF(*)
1,2,3,4,7,8-HxCDD(*)	1,2,3,6,7,8-HxCDF(*)
1,2,3,7,8,9-HxCDD(+)	1,2,3,7,8,9-HxCDF(*)
1,2,3,4,6,7,8-HpCDD(*)	1,2,3,4,7,8-HxCDF(*)
1,2,3,4,5,6,7,8-OCDD(*)	2,3,4,6,7,8-HxCDF(*)
	1,2,3,4,6,7,8-HpCDF(*)
	1,2,3,4,7,8,9-HpCDF(*)
	1,2,3,4,5,6,7,8-OCDF

(*)The 13C-labeled analog is used as an internal standard.
(+)The 13C-labeled analog is used as a recovery standard.

Table 4: Concentration of Stock and Spiking Solutions Containing CDDS/CDDFs and Labeled Compounds

Analyte	Type	Labeled Compound Stock Solution (ng/mL=pg/µL)	Labeled Compound Spiking Solution[a] (ng/mL=pg/µL)	PAR Stock Solution (ng/mL=pg/µL)	PAR Spiking Solution[b] (ng/mL=pg/µL)
Internal Standard					
$^{13}C_{12}$-2,3,7,8-TCDD	IS	100	2	--	--
$^{13}C_{12}$-1,2,3,7,8-PeCDD	IS	100	2	--	--
$^{13}C_{12}$-1,2,3,4,7,8-HxCDD	IS	100	2	--	--
$^{13}C_{12}$-1,2,3,6,7,8-HxCDD	IS	100	2	--	--
$^{13}C_{12}$-1,2,3,4,6,7,8-HpCDD	IS	100	2	--	--
$^{13}C_{12}$-OCDD	IS	100	4	--	--
$^{13}C_{12}$-2,3,7,8-TCDF	IS	100	2	--	--
$^{13}C_{12}$-1,2,3,7,8-PeCDF	IS	100	2	--	--
$^{13}C_{12}$-2,3,4,7,8-PeCDF	IS	100	2	--	--
$^{13}C_{12}$-1,2,3,4,7,8-HxCDF	IS	100	2	--	--
$^{13}C_{12}$-1,2,3,6,7,8-HxCDF	IS	100	2	--	--
$^{13}C_{12}$-2,3,4,6,7,8-HxCDF	IS	100	2	--	--
$^{13}C_{12}$-1,2,3,7,8,9-HxCDF	IS	100	2	--	--
$^{13}C_{12}$-1,2,3,4,6,7,8-HpCDF	IS	100	2	--	--
$^{13}C_{12}$-1,2,3,4,7,8,9-HpCDF	IS	100	2	--	--
Recovery Standard					
$^{13}C_{12}$-1,2,3,4-TCDD	RS	200	100[d]	--	--
$^{13}C_{12}$-1,2,3,7,8,9-HxCDD	RS	200	100[d]	--	--
Cleanup Recovery Standard					
$^{37}Cl_4$-2,3,7,8-TCDD	CRS	200	0.8[c]	--	--
Native Standard					
2,3,7,8-TCDD	NS	--	--	40	4
1,2,3,7,8-PeCDD	NS	--	--	200	20
1,2,3,4,7,8-HxCDD	NS	--	--	200	20
1,2,3,6,7,8-HxCDD	NS	--	--	200	20
1,2,3,7,8,9-HxCDD	NS	--	--	200	20
1,2,3,4,6,7,8-HpCDD	NS	--	--	200	20
OCDD	NS	--	--	400	40
2,3,7,8-TCDF	NS	--	--	40	4
1,2,3,7,8-PeCDF	NS	--	--	200	20
2,3,4,7,8-PeCDF	NS	--	--	200	20
1,2,3,4,7,8-HxCDF	NS	--	--	200	20
1,2,3,6,7,8-HxCDF	NS	--	--	200	20
2,3,4,6,7,8-HxCDF	NS	--	--	200	20
1,2,3,7,8,9-HxCDF	NS	--	--	200	20
1,2,3,4,6,7,8-HpCDF	NS	--	--	200	20
1,2,3,4,7,8,9-HpCDF	NS	--	--	200	20
OCDF	NS	--	--	400	40

(a) typical spike amount is 1.0mL
(b) typical spike amount is 50µL
(c) typical spike amount is 1.0mL
(d) typical spike amount is 20µL

Table 5: Concentration of CDD's/CDF's in Calibration and Calibration Verification Solutions

Compound	Concentration (ng/mL)				
	CS1	CS2	CS3	CS4	CS5
Native CDDs and CDFs					
2,3,7,8-TCDD	0.5	2	10	40	200
2,3,7,8-TCDF	0.5	2	10	40	200
1,2,3,7,8-PeCDD	2.5	10	50	200	1000
1,2,3,7,8-PeCDF	2.5	10	50	200	1000
2,3,4,7,8-PeCDF	2.5	10	50	200	1000
1,2,3,4,7,8-HxCDD	2.5	10	50	200	1000
1,2,3,6,7,8-HxCDD	2.5	10	50	200	1000
1,2,3,7,8,9-HxCDD	2.5	10	50	200	1000
1,2,3,4,7,8-HxCDF	2.5	10	50	200	1000
1,2,3,6,7,8-HxCDF	2.5	10	50	200	1000
1,2,3,7,8,9-HxCDF	2.5	10	50	200	1000
2,3,4,6,7,8-HxCDF	2.5	10	50	200	1000
1,2,3,4,6,7,8-HpCDD	2.5	10	50	200	1000
1,2,3,4,6,7,8-HpCDF	2.5	10	50	200	1000
1,2,3,4,7,8,9-HpCDF	2.5	10	50	200	1000
OCDD	5.0	20	100	400	2000
OCDF	5.0	20	100	400	2000
Labeled CDDs and CDFs					
$^{13}C_{12}$-2,3,7,8-TCDD	100	100	100	100	100
$^{13}C_{12}$-2,3,7,8-TCDF	100	100	100	100	100
$^{13}C_{12}$-1,2,3,7,8-PeCDD	100	100	100	100	100
$^{13}C_{12}$-1,2,3,7,8-PeCDF	100	100	100	100	100
$^{13}C_{12}$-2,3,4,7,8-PeCDF	100	100	100	100	100
$^{13}C_{12}$-1,2,3,4,7,8-HxCDD	100	100	100	100	100
$^{13}C_{12}$-1,2,3,6,7,8-HxCDD	100	100	100	100	100
$^{13}C_{12}$-1,2,3,4,7,8-HxCDF	100	100	100	100	100
$^{13}C_{12}$-1,2,3,6,7,8-HxCDF	100	100	100	100	100
$^{13}C_{12}$-1,2,3,7,8,9-HxCDF	100	100	100	100	100
$^{13}C_{12}$-2,3,4,6,7,8-HxCDF	100	100	100	100	100
$^{13}C_{12}$-1,2,3,4,6,7,8-HpCDD	100	100	100	100	100
$^{13}C_{12}$-1,2,3,4,6,7,8-HpCDF	100	100	100	100	100
$^{13}C_{12}$-1,2,3,4,7,8,9-HpCDF	100	100	100	100	100
$^{13}C_{12}$-OCDD	200	200	200	200	200
Cleanup Standard/ FS					
$^{37}Cl_4$-2,3,7,8-TCDD	0.5	2	10	40	200
Recovery Standards					
$^{13}C_{12}$-1,2,3,4-TCDD	100	100	100	100	100
$^{13}C_{12}$-1,2,3,7,8,9-HxCDD	100	100	100	100	100

Table 6: GC Retention Time Window Defining Test and Isomer Specificity Test Solution

DB-5 column GC retention-time window defining solution		
CDD/CDF	**First Eluter**	**Last Eluter**
TCDF	1,3,6,8-	1,2,8,9-
TCDD	1,3,6,8-	1,2,8,9-
PeCDF	1,3,4,6,8-	1,2,3,8,9-
PeCDD	1,2,4,7,9-	1,2,3,8,9-
HxCDF	1,2,3,4,6,8-	1,2,3,4,8,9-
HxCDD	1,2,4,6,7,9-	1,2,3,4,6,7-[a]
HpCDF	1,2,3,4,6,7,8-	1,2,3,4,7,8,9-
HpCDD	1,2,3,4,6,7,9-	1,2,3,4,6,7,8-
DB-5 Column TCDD Specificity Test Standard[b]		
	1,2,3,7+1,2,3,8-TCDD 2,3,7,8-TCDD 1,2,3,9-TCDD 1,2,3,4-TCDD	
DB-225 Column TCDF Isomer Specificity Test Standard[c]		
	2,3,4,7-TCDF 2,3,7,8-TCDF 1,2,3,9-TCDF	

(a) The 1,2,3,4,6,7-HxCDD isomer is not the last eluting isomer. 1,2,4,7,8,9-HxCDD is the last eluting HxCDD isomer and is present in the internal standard solution.
(b) Column performance criteria is met on the DB-5 column when the percent valleys between the 2,3,7,8-TCDD analyte and the closest eluting analytes are ≤25%.
(c) Column performance criteria is met on the DB-225 column when the percent valleys between the 2,3,7,8-TCDF analyte and the closest eluting analytes are ≤25%.

Table 7: Chlorinated Dibenzo-p-Dioxins and Furans Determined by Isotope Dilution and Internal Standard High Resolution Gas Chromatography (HRGC)/High Resolution Mass Spectrometry (HRMS)

CDDs/CDFs (1)	CAS registry	Labeled analog	CAS registry
2,3,7,8-TCDD	1746-01-6	$^{13}C_{12}$-2,3,7,8-TCDD	76523-40-5
		$^{37}Cl_4$-2,3,7,8-TCDD	85508-50-5
Total TCDD	41903-57-5		
2,3,7,8-TCDF	51207-31-9	$^{13}C_{12}$-2,3,7,8-TCDF	89059-46-1
Total TCDF	55722-27-5		
1,2,3,7,8-PeCDD	40321-76-4	$^{13}C_{12}$-1,2,3,7,8-PeCDD	109719-79-1
Total PeCDD	36088-22-9		
1,2,3,7,8-PeCDF	57117-41-6	$^{13}C_{12}$-1,2,3,7,8-PeCDF	109719-77-9
2,3,4,7,8-PeCDF	57117-31-4	$^{13}C_{12}$-2,3,4,7,8-PeCDF	116843-02-8
Total PeCDF	30402-15-4		
1,2,3,4,7,8-HxCDD	39227-28-6	$^{13}C_{12}$-1,2,3,4,7,8-HxCDD	109719-80-4
1,2,3,6,7,8-HxCDD	57653-85-7	$^{13}C_{12}$-1,2,3,6,7,8-HxCDD	109719-81-5
1,2,3,7,8,9-HxCDD	19408-74-3	$^{13}C_{12}$-1,2,3,7,8,9-HxCDD	109719-82-6
Total HxCDD	34465-46-8		
1,2,3,4,7,8-HxCDF	70648-26-9	$^{13}C_{12}$-1,2,3,4,7,8-HxCDF	114423-98-2
1,2,3,6,7,8-HxCDF	57117-44-9	$^{13}C_{12}$-1,2,3,6,7,8-HxCDF	116843-03-9
1,2,3,7,8,9-HxCDF	72918-21-9	$^{13}C_{12}$-1,2,3,7,8,9-HxCDF	116843-04-0
2,3,4,6,7,8-HxCDF	60851-34-5	$^{13}C_{12}$-2,3,4,6,7,8-HxCDF	116843-05-1
Total HxCDF	55684-94-1		
1,2,3,4,6,7,8-HpCDD	35822-46-9	$^{13}C_{12}$-1,2,3,4,6,7,8-HpCDD	109719-83-7
Total HpCDD	37871-00-4		
1,2,3,4,6,7,8-HpCDF	67562-39-4	$^{13}C_{12}$-1,2,3,4,6,7,8-HpCDF	109719-84-8
1,2,3,4,7,8,9-HpCDF	55673-89-7	$^{13}C_{12}$-1,2,3,4,7,8,9-HpCDF	109719-94-0
Total HpCDF			
OCDD	3268-87-9	$^{13}C_{12}$-OCDD	114423-97-1
OCDF	39001-02-0	Not Used	

(1) Chlorinated dibenzo-p-dioxins and chlorinated dibenzofurans

TCDD = Tetrachlorodibenzo-p-dioxins
TCDF = Tetrachlorodibenzofurans
PeCDD = Pentachlorodibenzo-p-dioxins
PeCDF = Pentachlorodibenzofurans
HxCDD = Hexachlorodibenzo-p-dioxins
HxCDF = Hexachlorodibenzofurans
HpCDD = Heptaachlorodibenzo-p-dioxins
HpCDF = Heptachlorodibenzofurans
OCDD = Octachlorodibenzo-p-dioxins
OCDF = Octachlorodibenzofurans

Table 8: Retention Time References, Quantitation References, Relative Retention Times, and Minimum Levels for PCDDs and PCDFs.

			Minimum Level (1)		
CDD/CDF	**Retention Time and Quantiation Reference**	**Relative Retention Time**	**Water (pg/L=ppq)**	**Solid (ng/kg=ppt)**	**Extract (pg/µL=ppb)**
Compounds using $^{13}C_{12}$-1,2,3,4-TCDD as the Injection Internal Standard (Recovery Standard)					
2,3,7,8-TCDF	$^{13}C_{12}$-2,3,7,8-TCDF	0.999-1.003	10	1	0.5
2,3,7,8-TCDD	$^{13}C_{12}$-2,3,7,8-TCDD	0.999-1.002	10	1	0.5
1,2,3,7,8-PeCDF	$^{13}C_{12}$-1,2,3,7,8-PeCDF	0.999-1.002	50	5	2.5
2,3,4,7,8-PeCDF	$^{13}C_{12}$-2,3,4,7,8-PeCDF	0.999-1.002	50	5	2.5
1,2,3,7,8-PeCDD	$^{13}C_{12}$-1,2,3,7,8-PeCDD	0.999-1.002	50	5	2.5
$^{13}C_{12}$-2,3,7,8-TCDF	$^{13}C_{12}$-1,2,3,4-TCDD	0.923-1.103	--	--	--
$^{13}C_{12}$-2,3,7,8-TCDD	$^{13}C_{12}$-1,2,3,4-TCDD	0.976-1.043	--	--	--
$^{37}Cl_4$-2,3,7,8-TCDD	$^{13}C_{12}$-1,2,3,4-TCDD	0.989-1.052	--	--	--
$^{13}C_{12}$-1,2,3,7,8-PeCDF	$^{13}C_{12}$-1,2,3,4-TCDD	1.000-1.425	--	--	--
$^{13}C_{12}$-2,3,4,7,8-PeCDF	$^{13}C_{12}$-1,2,3,4-TCDD	1.001-1.526	--	--	--
$^{13}C_{12}$-1,2,3,7,8-PeCDD	$^{13}C_{12}$-1,2,3,4-TCDD	1.000-1.567	--	--	--
Compounds using $^{13}C_{12}$-1,2,3,7,8,9-HxCDD as the Injection Internal Standard (Recovery Standard)					
1,2,3,4,7,8-HxCDF	$^{13}C_{12}$-1,2,3,4,7,8-HxCDF	0.999-1.001	50	5	2.5
1,2,3,6,7,8-HxCDF	$^{13}C_{12}$-1,2,3,6,7,8-HxCDF	1.000-1.005	50	5	2.5
1,2,3,7,8,9-HxCDF	$^{13}C_{12}$-1,2,3,7,8,9-HxCDF	0.999-1.001	50	5	2.5
2,3,4,6,7,8-HxCDF	$^{13}C_{12}$-2,3,4,6,7,8-HxCDF	0.999-1.001	50	5	2.5
1,2,3,4,7,8-HxCDD	$^{13}C_{12}$-1,2,3,4,7,8-HxCDD	0.999-1.001	50	5	2.5
1,2,3,6,7,8-HxCDD	$^{13}C_{12}$-1,2,3,6,7,8-HxCDD	0.999-1.004	50	5	2.5
1,2,3,7,8,9-HxCDD	(2)	1.000-1.019	50	5	2.5
1,2,3,4,6,7,8-HpCDF	$^{13}C_{12}$-1,2,3,4,6,7,8-HpCDF	0.999-1.001	50	5	2.5
1,2,3,4,7,8,9-HpCDF	$^{13}C_{12}$-1,2,3,4,7,8,9-HpCDF	0.999-1.001	50	5	2.5
1,2,3,4,6,7,8-HpCDD	$^{13}C_{12}$-1,2,3,4,6,7,8-HpCDD	0.999-1.001	50	5	2.5
OCDF	$^{13}C_{12}$- OCDD	0.999-1.001	100	10	5.0
OCDD	$^{13}C_{12}$- OCDD	0.999-1.001	100	10	5.0
$^{13}C_{12}$-1,2,3,4,7,8-HxCDF	$^{13}C_{12}$-1,2,3, 7,8,9-HxCDD	(3)	--	--	--
$^{13}C_{12}$-1,2,3,6,7,8-HxCDF	$^{13}C_{12}$-1,2,3, 7,8,9-HxCDD	0.949-0.975	--	--	--
$^{13}C_{12}$-1,2,3,7,8,9-HxCDF	$^{13}C_{12}$-1,2,3, 7,8,9-HxCDD	0.977-1.047	--	--	--
$^{13}C_{12}$-2,3,4,6,7,8-HxCDF	$^{13}C_{12}$-1,2,3, 7,8,9-HxCDD	0.959-1.021	--	--	--
$^{13}C_{12}$-1,2,3,4,7,8-HxCDD	$^{13}C_{12}$-1,2,3, 7,8,9-HxCDD	0.977-1.000	--	--	--
$^{13}C_{12}$-1,2,3,6,7,8-HxCDD	$^{13}C_{12}$-1,2,3, 7,8,9-HxCDD	0.981-1.003	--	--	--
$^{13}C_{12}$-1,2,3,4,6,7,8-HpCDF	$^{13}C_{12}$-1,2,3, 7,8,9-HxCDD	1.043-1.085	--	--	--
$^{13}C_{12}$-1,2,3,4,7,8,9-HpCDF	$^{13}C_{12}$-1,2,3, 7,8,9-HxCDD	1.057-1.151	--	--	--
$^{13}C_{12}$-1,2,3,4,6,7,8-HpCDD	$^{13}C_{12}$-1,2,3, 7,8,9-HxCDD	1.086-1.110	--	--	--
$^{13}C_{12}$- OCDD	$^{13}C_{12}$-1,2,3, 7,8,9-HxCDD	1.032-1.311	--	--	--

(1) The Minimum Level (ML) for each analyte is defined as the level at which the entire analytical system must give a recognizable signal and acceptance calibration point. It is equivalent to the concentration of the lowest calibration standard, assuming that all method-specified sample weights, volumes, and cleanup procedures have been employed.

(2) The retention time reference for 1,2,3,7,8,9-HxCDD is $^{13}C_{12}$-1,2,3,6,7,8-HxCDD, and 1,2,3,7,8,9-HxCDD is quantified using the averaged responses for $^{13}C_{12}$-1,2,3,4,7,8-HxCDD and $^{13}C_{12}$-1,2,3,6,7,8-HxCDD.

(3) Method 1613 has many typographical errors within this table. Most have been corrected. This RRT is not present in Method 1613, but the internal standard is clearly identifiable and there is no adverse impact for this error.

Table 9: Acceptance Criteria for Performance Tests (1)

CDD/CDF	Test Conc. (ng/mL = pg/µL)	IPR (2)(3)		OPR (LCS) (ng/mL = pg/µL)	VER (CC3) (ng/mL = pg/µL)
		S (ng/mL = pg/µL)	X (ng/mL = pg/µL)		
2,3,7,8-TCDD	10	2.8	8.3-12.9	6.7-15.8	7.8-12.9
2,3,7,8-TCDF	10	2.0	8.7-13.7	7.5-15.8	8.4-12.0
1,2,3,7,8-PeCDD	50	7.5	38-66	35-71	39-65
1,2,3,7,8-PeCDF	50	7.5	43-62	40-67	41-60
2,3,4,7,8-PeCDF	50	8.6	36-75	34-80	41-61
1,2,3,4,7,8-HxCDD	50	9.4	39-76	35-82	39-64
1,2,3,6,7,8-HxCDD	50	7.7	42-62	38-67	39-64
1,2,3,7,8,9-HxCDD	50	11.1	37-71	32-81	41-61
1,2,3,4,7,8-HxCDF	50	8.7	41-59	36-67	45-56
1,2,3,6,7,8-HxCDF	50	6.7	46-60	42-65	44-57
1,2,3,7,8,9-HxCDF	50	6.4	42-61	39-65	45-56
2,3,4,6,7,8-HxCDF	50	7.4	37-74	35-78	44-57
1,2,3,4,6,7,8-HpCDD	50	7.7	38-65	35-70	43-58
1,2,3,4,6,7,8-HpCDF	50	6.3	45-56	41-61	45-55
1,2,3,4,7,8,9-HpCDF	50	8.1	43-63	39-69	43-58
OCDD	100	19	89-127	78-144	79-126
OCDF	100	27	74-146	63-170	63-159
$^{13}C_{12}$-2,3,7,8-TCDD	100	37	28-134	20-175	82-121
$^{13}C_{12}$-2,3,7,8-TCDF	100	35	31-113	22-152	71-140
$^{13}C_{12}$-1,2,3,7,8-PeCDD	100	39	27-184	21-227	62-160
$^{13}C_{12}$-1,2,3,7,8-PeCDF	100	34	27-156	21-192	76-130
$^{13}C_{12}$-2,3,4,7,8-PeCDF	100	38	16-279	13-328	77-130
$^{13}C_{12}$-1,2,3,4,7,8-HxCDD	100	41	29-147	21-193	85-117
$^{13}C_{12}$-1,2,3,6,7,8-HxCDD	100	38	34-122	25-163	85-118
$^{13}C_{12}$-1,2,3,4,7,8-HxCDF	100	43	27-152	19-202	76-131
$^{13}C_{12}$-1,2,3,6,7,8-HxCDF	100	35	30-122	21-159	70-143
$^{13}C_{12}$-1,2,3,7,8,9-HxCDF	100	40	24-157	17-205	74-135
$^{13}C_{12}$-2,3,4,6,7,8-HxCDF	100	37	29-136	22-176	73-137
$^{13}C_{12}$-1,2,3,4,6,7,8-HpCDD	100	35	34-129	26-166	72-138
$^{13}C_{12}$-1,2,3,4,6,7,8-HpCDF	100	41	32-110	21-158	78-129
$^{13}C_{12}$-1,2,3,4,7,8,9-HpCDD	100	40	28-141	20-186	77-129
$^{13}C_{12}$- OCDD	200	95	41-276	26-397	96-415
$^{37}Cl_4$-2,3,7,8-TCDD	10	3.6	3.9-15.4	3.1-19.1	7.9-12.7

(1) All specifications are given as concentration in the final extract, assuming a 20µL final volume.
(2) s = standard deviation of the concentraion.
(3) X = average concentration.

(Table 6A from Method 1613 – Acceptance Criteria for Performance Tests when only Tetra Compounds are tested – This table is not applicable. TestAmerica West Sacramento uses the same curve for both "full list" and "tetra only" analyses. Spiking standards are QC'd against this calibration curve.)

Table 10: Descriptors, Exact m/z's, m/z types, and Elemental Compositions of the CDDs and CDFs

Descriptor	Exact m/z [1]	m/z Type	Elemental Composition	Substance [2]
1	292.9825	Lock	C_7F_{11}	PFK
	303.9016	M	$C_{12}H_4{}^{35}Cl_4O$	TCDF
	305.8987	M+2	$C_{12}H_4{}^{35}Cl_3{}^{37}ClO$	TCDF
	315.9419	M	$^{13}C_{12}H_4{}^{35}Cl_4O$	TCDF [3]
	317.9389	M+2	$^{13}C_{12}H_4{}^{35}Cl_3{}^{37}ClO$	TCDF [3]
	319.8965	M	$C_{12}H_4{}^{35}Cl_4O_2$	TCDD
	321.8936	M+2	$C_{12}H_4{}^{35}Cl_3{}^{37}ClO_2$	TCDD
	327.8847	M	$C_{12}H_4{}^{37}Cl_4O_2$	TCDD [4]
	330.9792	QC	C_7F_{13}	PFK
	331.9368	M	$^{13}C_{12}H_4{}^{35}Cl_4O_2$	TCDD [3]
	333.9339	M+2	$^{13}C_{12}H_4{}^{35}Cl_3{}^{37}ClO_2$	TCDD [3]
	375.8364	M+2	$C_{12}H_4{}^{35}Cl_5{}^{37}ClO$	HxCDPE
	339.8597	M+2	$C_{12}H_3{}^{35}Cl_4{}^{37}ClO$	PeCDF
	341.8567	M+4	$C_{12}H_3{}^{35}Cl_3{}^{37}ClO$	PeCDF
	409.7974	M+2	$C_{12}H_3{}^{35}Cl_6{}^{37}ClO$	HpCDPE
2	339.8597	M+2	$C_{12}H_3{}^{35}Cl_4{}^{37}ClO$	PeCDF
	341.8567	M+4	$C_{12}H_3{}^{35}Cl_3{}^{37}Cl_2O$	PeCDF
	351.9000	M+2	$^{13}C_{12}H_3{}^{35}Cl_4{}^{37}ClO$	PeCDF
	353.8970	M+4	$^{13}C_{12}H_3{}^{35}Cl_4{}^{37}ClO$	PeCDF [3]
	354.9792	Lock	C_9F_{13}	PFK
	355.8546	M+2	$C_{12}H_3{}^{35}Cl_4{}^{37}ClO_2$	PeCDD
	357.8516	M+4	$C_{12}H_3{}^{35}Cl_3{}^{37}Cl_2O_2$	PeCDD
	367.8949	M+2	$^{13}C_{12}H3^{35}Cl_4{}^{37}ClO_2$	PeCDD [3]
	369.8919	M+4	$^{13}C_{12}H3^{35}Cl_3{}^{37}Cl_2O_2$	PeCDD [3]
	409.7974	M+2	$C_{12}H_3{}^{35}Cl_6{}^{37}ClO$	HpCDPE
3	373.8208	M+2	$C_{12}H_2{}^{35}Cl_5{}^{37}ClO$	HxCDF
	375.8178	M+4	$C_{12}H_2{}^{35}Cl_4{}^{37}Cl_2O$	HxCDF
	383.8639	M	$^{13}C_{12}H_2{}^{35}Cl_6O$	HxCDF [3]
	385.8610	M+2	$^{13}C_{12}H_2{}^{35}Cl_5{}^{37}ClO$	HxCDF [3]
	389.8157	M+2	$C_{12}H_2{}^{35}Cl_5{}^{37}ClO_2$	HxCDD
	391.8127	M+4	$C_{12}H_2{}^{35}Cl_4{}^{37}Cl_2O_2$	HxCDD
	392.9760	Lock		PFK
	401.8559	M+2	$^{13}C_{12}H_2{}^{35}Cl_5{}^{37}ClO_2$	HxCDD [3]
	403.8529	M+4	$^{13}C_{12}H_2{}^{35}Cl_4{}^{37}Cl_2O_2$	HxCDD [3]
	430.9729	QC	C_9F_{17}	PFK
	455.7555	M+4	$C_{12}H_2{}^{35}Cl_6{}^{37}Cl_2O$	OCDPE
4	407.7818	M+2	$C_{12}H^{35}Cl_6{}^{37}ClO$	HpCDF
	409.7789	M+4	$C_{12}H^{35}Cl_5{}^{37}Cl_2O$	HpCDF
	417.8253	M	$^{13}C_{12}H^{35}Cl_7O$	HpCDF [3]
	419.8220	M+2	$^{13}C_{12}H^{35}Cl_6{}^{37}ClO$	HpCDF [3]
	423.7766	M+2	$C_{12}H^{35}Cl_6{}^{37}ClO_2$	HpCDD
	425.7737	M+4	$C_{12}H^{35}Cl_5{}^{37}Cl_2O_2$	HpCDD
	430.9729	Lock	C_9F_{17}	PFK
	435.8169	M+2	$^{13}C_{12}H^{35}Cl_6{}^{37}ClO_2$	HpCDD [3]
	437.8140	M+4	$^{13}C_{12}H^{35}Cl_5{}^{37}CL_2O_2$	HpCDD [3]
	479.7165	M+4	$C_{12}H^{35}CL_7{}^{37}Cl_2O$	NCDPE
5	441.7428	M+2	$C_{12}{}^{35}Cl_7{}^{37}ClO$	OCDF
	442.9728	Lock	$C_{10}F_{17}$	PFK

Descriptor	Exact m/z (1)	m/z Type	Elemental Composition	Substance (2)
	443.7399	M+4	$C_{12}{}^{35}Cl_6{}^{37}Cl_2O$	OCDF
	457.7377	M+2	$C_{12}{}^{35}Cl_7{}^{37}ClO_2$	OCDD
	459.7348	M+4	$C_{12}{}^{35}Cl_6{}^{37}Cl_2O_2$	OCDD
	469.7779	M+2	$^{13}C1_2{}^{35}Cl_7{}^{37}ClO_2$	OCDD (3)
	471.7750	M+4	$^{13}C1_2{}^{35}Cl_6{}^{37}Cl_2O_2$	OCDD (3)
	513.6775	M+4	$^{13}C1_2{}^{35}Cl_8{}^{37}Cl_2O$	DCDPE

(1) Nuclidic masses used:
H = 1.007825
O = 15.994915
C = 12.00000
^{13}C = 13.003355
^{35}Cl = 34.968853
^{37}Cl = 36.965903
F = 18.9984

(2) Nomenclature
TCDD = Tetrachlorodibenzo-p-dioxin
PeCDD = Pentachlorodibenzo-p-dioxin
HxCDD = Hexachlorodibenzo-p-dioxin
HpCDD = Heptachlorodibenzo-p-dioxin
OCDD = Octachlorodibenzo-p-dioxin
HxCDPE = Hexachlorodiphenyl ether
HpCDPE = Heptachlorodiphenyl ether
NCDPE = Nonachlorodiphenyl ether
OCDPE = Octachlorodiphenyl ether
DCDPE = Decachlorodiphenyl ether
TCDF = Tetrachlorodibenzofuran
PeCDF = Pentachlorodibenzofuran
HxCDF = Hexachlorodibenzofuran
HpCDF = Heptachlorodibenzofuran
OCDF = Octachlorodibenzofuran
PFK = Perfluorokerosene

(3) Labeled compound

(4) There is only one m/z for $^{37}Cl_4$-2,3,7,8-TCDD (Cleanup Recovery Standard)

Title: Preparation of Samples for Tetra- Through Octa Chlorinated Dioxins and Furans By Isotope Dilution HRGC/HRMS By Method 1613B [Method 1613B]

Approvals (Signature/Date):

2.22.08	2/25/08
Kevin Sanchez Technical Manager Date	Joe Schairer Health & Safety Manager / Coordinator Date
Pamela Schemmer 2/22/08	Karla Buechler 2/28/08
Pamela Schemmer Quality Assurance Manager Date	Karla Buechler Laboratory Director Date

Copyright Information:
This documentation has been prepared by TestAmerica Analytical Testing Corp. and its affiliates ("TestAmerica"), solely for their own use and the use of their customers in evaluating their qualifications and capabilities in connection with a particular project. The user of this document agrees by its acceptance to return it to TestAmerica upon request and not to reproduce, copy, lend, or otherwise disclose its contents, directly or indirectly, and not to use if for any other purpose other than that for which it was specifically provided. The user also agrees that where consultants or other outside parties are involved in the evaluation process, access to these documents shall not be given to said parties unless those parties also specifically agree to these conditions.

THIS DOCUMENT CONTAINS VALUABLE CONFIDENTIAL AND PROPRIETARY INFORMATION. DISCLOSURE, USE OR REPRODUCTION OF THESE MATERIALS WITHOUT THE WRITTEN AUTHORIZATION OF TESTAMERICA IS STRICTLY PROHIBITED. THIS UNPUBLISHED WORK BY TESTAMERICA IS PROTECTED BY STATE AND FEDERAL LAW OF THE UNITED STATES. IF PUBLICATION OF THIS WORK SHOULD OCCUR THE FOLLOWING NOTICE SHALL APPLY:

©COPYRIGHT 2008 TESTAMERICA LABORATORIES, INC. ALL RIGHTS RESERVED.

Facility Distribution No. UNCONTROLLED **Distributed To:** Test America West Sacramento Bids Folder

1. SCOPE AND APPLICATION

1.1. The procedures outlined within this SOP are appropriate for the preparation of samples for the determination of 2,3,7,8-TCDD/TCDF and tetra-through-octa chlorinated dibenzo-p-dioxins and dibenzofurans associated with the Clean Water Act (as amended 1987); the Resource Conservation and Recovery Act (as amended 1986); and the Comprehensive Environmental Response, Compensation and Liability Act (as amended 1986). Specificity is provided for determination of the seventeen 2, 3, 7, 8-substituted polychlorinated dibenzo-p-dioxins (PCDD) and polychlorinated dibenzofurans (PCDF). See Table 1 for list of analytes. Analysis is by SOP WS-ID-0007.

2. SUMMARY OF METHOD

2.1. Internal Standards consist of stable isotopically labeled analogs of 15 of the PCDDs and PCDFs and are added to each sample prior to extraction. Samples containing coarse solids are prepared for extraction by grinding or homogenization. Drinking water samples are extracted with methylene chloride using separatory funnel procedures. Non drinking water type samples are filtered and then extracted with methylene chloride using separatory funnel procedures; the particulates from the water samples, soils, and other finely divided solids are extracted using a combined Soxhlet (or equivalent) extraction/Dean-Stark azeotropic distillation with toluene (Reference 7, Method 1613). Prior to cleanup and analysis, the extracts of the filtered water and the particulates are combined.

2.2. After extraction, $^{37}Cl_4$-labeled 2, 3, 7, 8, -TCDD is added to each extract to measure the efficiency of the cleanup process. Samples are then permeated through silica gel, acidic alumina, and activated carbon chromatography columns. High performance liquid chromatography (HPLC), basic alumina, or back extraction with sulfuric acid/water/NaOH/water can be used for further isolation of the 2, 3, 7, 8-isomers or other specific isomers or congeners.

2.3. After cleanup, the extract is concentrated to near dryness and a known amount of recovery standard is added to each extract. The recovery standard contains two $^{13}C_{12}$-labeled analogs ($^{13}C_{12}$-1,2,3,4-TCDD and $^{13}C_{12}$-1,2,3,7,8,9-HxCDD). Each extract is concentrated to a final volume in tetradecane. The extract is ready for analysis and delivered to the Instrument Group for HRGC/HRMS.

3. DEFINITIONS

3.1. Definitions of terms used in this SOP may be found in the glossary of the Laboratory Quality Assurance Manual (QAM).

3.2. Data qualifiers are defined on each data report. Commonly used data qualifiers are defined in the QAM.

3.3. Cleanup Recovery Standard (CRS): A $^{37}Cl_4$-2,3,7,8-TCDD analog that is added to each sample following extraction to measure the efficiency of the cleanup process.

3.4. Recovery Standard (RS): Two recovery standards are used to determine the percent recoveries for the internal standards. The 13C-1,2,3,4-TCDD is used to measure the percent recoveries of the tetra- and pentachlorinated internal standards while 13C-1,2,3,7,8,9-HxCDD is used to determine the recovery of the hexa-hepta- and octachlorinated internal standards. 13C-1,2,3,7,8,9-HxCDD also acts as a retention time reference for the unlabeled analog present in sample extracts. They are added to the final sample extract before HRGC/HRMS instrument analysis.

4. INTERFERENCES

4.1. Solvents, reagents, glassware and other sample processing hardware may yield artifacts and/or elevated baselines causing misinterpretation of chromatograms. Specific selection of reagents and purification of solvents by distillation in all-glass systems may be required. Where possible, reagents are cleaned by extraction or solvent rinse.

4.2. Proper cleaning of glassware is extremely important because glassware may not only contaminate the samples, but may also remove the analytes of interest by absorption on the glassware surface.

4.2.1. Glassware should be rinsed with solvent and washed with a detergent solution as soon after use as practical. Sonication of glassware containing a detergent solution for approximately 30 seconds may aid in cleaning. Glassware with removable parts, particularly separatory funnels with Teflon stopcocks, must be disassembled prior to detergent washing.

4.2.2. After detergent washing, glassware should be immediately rinsed first with acetone, then with toluene. The toluene rinse is followed by hexane, and then methylene chloride.

4.2.3. Do not bake reusable glassware in an oven as a routine part of cleaning. Baking may be warranted after particularly dirty samples are encountered, but should be minimized, as repeated baking of glassware may cause active sites on the glass surface that will irreversibly absorb PCDDs/PCDFs.

4.2.4. Immediately prior to use, Soxhlet (or equivalent) extraction glassware should be pre-extracted with toluene for approximately 4 hours (1 hour for Soxtherm extraction glassware) (See Method 1613A, Section 11.2.3). Separatory funnels are rinsed sequentially with acetone, toluene, hexane and

methylene chloride.

4.3. All materials used in the analysis shall be demonstrated to be free from interferences by running reference blanks initially and with each sample set (samples started through the extraction process on a given 12-hour shift, to a maximum of 20 samples). The reference matrix blank must simulate, as closely as possible, the sample matrix under test. Reagent water is used to simulate water samples; playground sand, white quartz sand, or sodium sulfate can be used to simulate soils; filter paper or Soxhlet extraction thimbles are used to simulate paper and similar materials; other materials can be used to simulate other matrices.

4.4. Interferences co-extracted from samples will vary considerably from source to source, depending on the diversity of the site being sampled. Interfering compounds may be present at concentrations several orders of magnitude higher than the PCDDs and PCDFs. The most frequently encountered interferences are chlorinated-biphenyls, methoxy biphenyls, hydroxy biphenyl ethers, benzyl phenyl ethers, polynuclear aromatics, and pesticides. Because very low levels of PCDDs and PCDFs are measured by this method, the elimination of interferences is essential. The cleanup steps given in Sections 11.9, 11.10, 11.11, and 11.12 can be used to reduce or eliminate these interferences.

5. SAFETY

Employees must abide by the policies and procedures in the Corporate Safety Manual, Radiation Safety Manual, Sacramento Supplement to the CSM, and this document. All work must be stopped in the event of a known or potential compromise to the health or safety of an associate. The situation must be reported immediately to a supervisor, the EH&S Staff, or a senior manager.

5.1. Specific Safety Concerns or Requirements

5.1.1. Hearing protection must be worn when using mechanical systems to grind fish or tissue samples.

5.1.2. When dissecting crawfish abdomens with a scalpel, cut from the hand holding the abdomen toward the tail (away from you).

5.1.3. Finely divided dry soils contaminated with PCDDs and PCDFs are particularly hazardous because of the potential for inhalation and ingestion. Such samples are to be processed in a confined environment, such as a hood or a glove box.

5.1.4. The use of vacuum systems during various filtering and/or cleanup steps presents the risk of imploding glassware. All glassware used during vacuum operations must be thoroughly inspected prior to each use. Glass that is

chipped, scratched, cracked, rubbed or marred in any manner must not be used under vacuum. It must be removed from service immediately and replaced.

5.1.5. The use of separatory funnels to extract aqueous samples with methylene chloride creates excessive pressure very rapidly. The use of separatory funnels during the partition and back extraction of sample extracts can also create excessive pressure. Initial venting should be done immediately after the sample container has been sealed and inverted. Vent the funnel into the hood away from people and other samples. This is considered a high-risk activity, and a face shield must be worn over safety glasses or goggles when it is performed. Alternately, the extraction can be performed behind a closed fume hood sash on a mechanical shaker.

5.1.6. When Dean-Stark/Soxhlet clean-ups or extractions are performed overnight or unattended, special precautions must be taken. Open the chiller valves to the system about 15 minutes before the heating elements are turned on, and check every condenser to ensure that it is cold and functioning properly before turning the heating elements on. Check every condenser again about 15 minutes after turning the heating elements on to ensure that they are still cold and functioning properly. If the system is left operating overnight or unattended for an extended period, the first chemist to come back into the lab must again check every condenser to ensure that it is still cold and functioning properly.

5.1.7. The effluents of sample splitters for the gas chromatograph and roughing pumps on the HRGC/HRMS system should pass through either a column of activated charcoal or be bubbled through a trap containing oil or high-boiling alcohol.

5.1.8. Assembly and disassembly of glassware creates a risk of breakage and cuts. All staff members shall wear Kevlar or MAPA blue latex cut-resistant gloves over chemically resistant gloves when assembling and disassembling glassware.

5.1.9. Eye protection that satisfies ANSI Z87.1, laboratory coat, and chemically resistant gloves must be worn while samples, standards, solvents, and reagents are being handled. Latex and vinyl gloves provide no protection against most of the organic solvents used in this method. Nitrile gloves must be used. Latex gloves may be used for methanol.

5.1.10. Exposure to chemicals must be maintained as low as reasonably achievable; therefore all samples must be opened, transferred and prepared in a fume hood. Solvent and waste containers will be kept closed unless transfers are

being made.

5.1.11. Laboratory procedures such as repetitive use of pipettes, repetitive transferring of extracts and manipulation of filled separatory funnels and other glassware represent a significant potential for repetitive motion or other ergonomic injuries. Laboratory associates performing these procedures are in the best position to realize when they are at risk for these types of injuries. Whenever a situation is found in which an employee is performing the same repetitive motion, the employee shall immediately bring this to the attention of their supervisor, manager, or the EH&S staff. The task will be analyzed to determine a better means of accomplishing it.

5.2. Primary Materials Used

The following is a list of the materials used in this method, which have a serious or significant hazard rating. **NOTE: This list does not include all materials used in the method. The table contains a summary of the primary hazards listed in the MSDS for each of the materials listed in the table.** A complete list of materials used in the method can be found in the reagents and materials section. Employees must review the information in the MSDS for each material before using it for the first time or when there are major changes to the MSDS.

Material	Hazards	Exposure Limit (2)	Signs and symptoms of exposure
Acetone	Flammable	1000 ppm-TWA	Inhalation of vapors irritates the respiratory tract. May cause coughing, dizziness, dullness, and headache.
Benzene	Flammable Toxic Carcinogen	PEL: 1 PPM TWA ; 5 PPM 15 MIN. STEL	Causes skin irritation. Toxic if absorbed through skin. Causes severe eye irritation. Toxic if inhaled. Vapor or mist causes irritation to mucous membranes and upper respiratory tract. Exposure can cause narcotic effect. Inhalation at high concentrations may have an initial stimulatory effect on the central nervous system characterized by exhilaration, nervous excitation and/or giddiness, depression, drowsiness or fatigue. Victim may experience tightness in the chest, breathlessness, and loss of consciousness.
Cyclohexane	Flammable Irritant	300 ppm TWA	Inhalation of vapors causes irritation to the respiratory tract. Symptoms may include coughing, shortness of breath. High concentrations have a narcotic effect.
Hexane	Flammable Irritant	500 ppm-TWA	Inhalation of vapors irritates the respiratory tract. Overexposure may cause lightheadedness, nausea, headache, and blurred vision. Vapors may cause irritation to the skin and eyes.
Iso-octane	Flammable Irritant	None established	Inhalation of vapors may cause nausea, headache, dizziness, loss of consciousness, irritation to upper respiratory tract, pain in throat and nose, coughing, wheezing, shortness of breath.
Methanol	Flammable Poison Irritant	200 ppm-TWA	A slight irritant to the mucous membranes. Toxic effects exerted upon nervous system, particularly the optic nerve. Symptoms of overexposure may include headache, drowsiness and dizziness. Methyl alcohol is a defatting agent and may cause skin to become dry and cracked. Skin absorption can occur; symptoms may parallel inhalation exposure. Irritant to the eyes.

Material	Hazards	Exposure Limit (2)	Signs and symptoms of exposure
Methylene Chloride	Carcinogen Irritant	25 ppm-TWA 125 ppm-STEL	Causes irritation to respiratory tract. Has a strong narcotic effect with symptoms of mental confusion, light-headedness, fatigue, nausea, vomiting and headache. Causes irritation, redness and pain to the skin and eyes. Prolonged contact can cause burns. Liquid degreases the skin. May be absorbed through skin.
Nonane	Flammable	200 ppm	Primary hazard is flammability.
Sodium Hydroxide	Corrosive Poison	2 ppm, 5 mg/m^3	This material will cause burns if comes into contact with the skin or eyes. Inhalation of Sodium Hydroxide dust will cause irritation of the nasal and respiratory system.
Sulfuric Acid (1)	Corrosive Oxidizer Dehydrator	1 mg/m^3	This material will cause burns if comes into contact with the skin or eyes. Inhalation of vapors will cause irritation of the nasal and respiratory system.
Tetradecane	Irritant	None established	Inhalation of vapors may cause difficulty breathing, headache, intoxication and central nervous system damage.
Toluene	Flammable Poison Irritant	200 ppm-TWA 300 ppm-Ceiling	Inhalation may cause irritation of the upper respiratory tract. Symptoms of overexposure may include fatigue, confusion, headache, dizziness and drowsiness. Peculiar skin sensations (e. g. pins and needles) or numbness may be produced. Causes severe eye and skin irritation with redness and pain. May be absorbed through the skin.
1 – Always add acid to water to prevent violent reactions.			
2 – Exposure limit refers to the OSHA regulatory exposure limit.			

6. EQUIPMENT AND SUPPLIES

Miscellaneous Equipment and Materials. The following list of items does not necessarily constitute an exhaustive compendium of the equipment needed for this analytical method.

6.1. Nitrogen evaporation apparatus with variable flow rate.

6.2. Balances capable of accurately weighing to 0.01 g and 0.0001 g.

6.3. Centrifuge.

6.4. Water bath, equipped with concentric ring covers and capable of maintaining temperature control within ± 2ºC.

6.5. Stainless steel or glass containers large enough to hold contents of one-pint sample containers.

6.6. Drying oven.

6.7. Stainless steel spoons and spatulas.

6.8. Pipettes, disposable, Pasteur, 150 mm long x 5 mm ID.

6.9. Pipettes, disposable, serological, 10 mL, for the preparation of the carbon column.

6.10. Reacti-vial, 2 mL, silanized amber glass.

6.11. Stainless steel meat grinder with a 3- to 5-mm hole size inner plate.

6.12. Separatory funnels, 125 mL.

6.13. Kuderna-Danish concentrator, 500 mL, fitted with 10 mL concentrator tube and three-ball Snyder column.

6.14. Teflon® boiling chips (or equivalent), washed with DCM before use.

6.15. Chromatographic column, glass, 300 mm x 10.5 mm, fitted with Teflon® stopcock.

6.16. Adapters for concentrator tubes.

6.17. Glass fiber filters.

6.18. Dean-Stark trap, 5 or 10 mL, with T-joints, condenser and 125 mL flask.

6.19. Continuous liquid-liquid extractor.

6.20. All-glass Soxhlet apparatus, 500 mL flask.

6.21. Soxtherm extraction apparatus (or equivalent)

6.22. Glass thimble holders for Soxtherm

6.23. Glass beakers for Soxtherm

6.24. Gaskets for Soxtherm

6.25. Glass funnels, sized to hold 170 mL of liquid.

6.26. Desiccator.

6.27. Solvent reservoir (125 mL), Kontes; 12.35 cm diameter (special order item), compatible with gravity carbon column.

6.28. Rotary evaporator with a temperature controlled water bath and vacuum control.

6.29. Turbo evaporator with a temperature controlled water bath and nitrogen pressure control.

6.30. High-speed tissue homogenizer equipped with an EN-8 probe or equivalent.

6.31. pH Strips

6.32. Glass wool, extracted with methylene chloride, dried and stored in a clean glass jar. Note: Re-use of glassware should be minimized to avoid the risk of contamination. All glassware that is re-used must be scrupulously cleaned as soon as possible after use.

7. REAGENTS AND STANDARDS

7.1. Column Chromatography Reagents

7.1.1. Silica Gel - Kieselgel 60 or equivalent, activate for 1 hour at 180°C before use. Store at 130°C in covered flask.

7.1.2. Acid Alumina - ICN or equivalent, activated as necessary.

7.1.3. Basic Alumina - ICN or equivalent. No activation required.

7.1.4. Granular carbon/silica gel - Mix 5 g granular carbon and 95 g activated silica gel; (alternatively, prepare carbon/silica gel (5%/95%)). Store at room temperature in a Teflon ® lined jar. The first LCS prepared with a new batch of column packing material is the quality control check of the packing materials. Refer to historical control limits before accepting the new batch of material.

7.1.5. 44% H_2SO_4 /silica gel - Mix 24 mL conc. H_2SO_4 and 56 g activated silica gel. Stir and shake until free flowing. Store at room temperature in a Teflon ® lined jar.

7.1.6. 33% NaOH/silica gel (as needed) - Mix 34 mL 1N NaOH and 67 g activated silica gel. Stir and shake until free flowing. Store at room temperature in a Teflon ® lined jar.

7.2. Reagents

7.2.1. Sulfuric acid, concentrated, ACS grade, specific gravity 1.84.

7.2.2. Distilled water demonstrated to be free of interferences.

7.2.3. Silica gel.

7.2.4. Solution for breaking emulsions: Slowly add 1.0 L of reagent grade NaOH solution to an 2.0 L NaOH container containing 1.0 L of DI H2O; leave the container in secondary containment with the lid off.

Warning: The solution will begin to heat so let the solution stand until equilibrium is met and the solution is at room temperature.

When this process is complete, the solution will then be ready for use in the samples.

7.2.5. Precleaned Ottawa sand (minimum 4 hours toluene Soxhlet Extracted).

7.2.6. Canola Oil (for tissue extraction only), or other suitable oils.

7.3. Desiccating Agent

7.3.1. Sodium sulfate, granular, anhydrous.

7.4. Solvents and Standards:

7.4.1. High-purity, distilled-in-glass or highest available purity: Methylene chloride (DCM), hexane, benzene, methanol, tetradecane, isooctane, toluene, cyclohexane, nonane and acetone.

7.4.2. All calibration, daily internal standard, daily clean up recovery standards, and daily spiking solutions are stable for one year from preparation. After 1 year, solutions may be re-verified. The re-verified solution may be used for an additional year, or until there is evidence of compound degradation or concentration. The re-verification must be performed using an unexpired, not previously re-verified solution from a second lot or second vendor.

7.4.3. Standards are purchased as solutions or mixtures with certification of their purity, concentration, and authenticity, or prepared from materials of known purity and composition. If the chemical purity is 98% or greater, the weight may be used without correction to compute the concentration of the standard. When not being used, standards can be stored in the dark at room temperature or refrigerated in screw-capped vials with fluoropolymer-lined or Teflon ® - lined caps. A mark is placed on the vial at the level of the solution so that solvent loss by evaporation can be detected. If solvent loss has occurred, the solution should be replaced.

7.4.4. Sealed ampules may be used until the manufacturer's expiration date is exceeded. If no expiration date is provided, then the expiration date will be 10 years from the date the ampule is opened. The solvent level should be monitored prior to each use to assure there has been no concentration of the standard over time.

7.5. Stock Solutions

7.5.1. Preparation – Prepare in nonane or equivalent solvent per the steps below or purchase as dilute solutions (Cambridge Isotope Laboratories, Cambridge, MA, or equivalent). Observe standard safety precautions.

7.5.2. Dissolve an appropriate amount of assayed reference material in solvent. For example, weigh 1 to 2 mg of 2,3,7,8-TCDD to three significant numbers in a 10 mL vial with Teflon ® - lined cap.

7.5.3. Stock standard solutions should be checked for signs of degradation prior to the preparation of calibration or performance test standards. Reference standards that can be used to determine the accuracy of calibration standards are available from Cambridge Isotope Laboratories and may be available from other vendors.

7.5.4. Secondary standard – Using stock solutions prepare secondary standard solutions if necessary which can be further diluted the spiking standard solutions (see below).

7.6. Precision and Recovery Standard (PAR) – Also known as the Matrix Spike or Native Spike solution. Contains all the 2,3,7,8-substituted unlabeled analytes listed in Table 2. Prepare using the appropriate standards made in Section 7.5 to yield a spiking solution with a concentration of 4.0 ng/ml for the tetra- CDDs/CDFs, 20 ng/ml for the penta-, hexa-, and hepta- CDDs/CDFs, and 40 ng/ml for the octa- CDD/CDF.

7.7. Sample Fortification Solution (Internal Standard Solution) – Also known as the Daily Internal Standard Solution. From stock solutions or purchased mixtures, prepare this solution in isooctane (or toluene) to contain the fifteen internal standards at the nominal concentrations that are listed in Table 2.

7.8. Recovery Standard Solution – This solution contains the two recovery standards ($^{13}C_{12}$-1,2,3,4-TCDD and $^{13}C_{12}$-1,2,3,7,8,9-HxCDD). This solution is preferably prepared in tetradecane. See Table 2 for nominal concentrations.

7.9. Cleanup Recovery Standard Solution (CRS) – Prepare $^{37}Cl_4$-2,3,7,8-TCDD at the concentration shown in Table 2, in isooctane (or toluene).

8. SAMPLE COLLECTION, PRESERVATION, SHIPMENT AND STORAGE

8.1. The sample collection, shipping, handling, and chain-of-custody procedures are not described in this document. Sample collection personnel will, to the extent possible, homogenize samples in the field before filling the sample containers. This should minimize or eliminate the necessity for sample homogenization in the laboratory. The analyst should make a judgment, based on the appearance of the sample, regarding the necessity for additional mixing. If the sample is clearly non-homogeneous, the entire contents should be transferred to a glass or stainless steel pan for mixing with a stainless steel spoon or spatula before removal of a sample portion for analysis.

8.2. Samples are collected in amber glass containers following conventional sampling practices (Method 1613). Freely flowing aqueous samples are collected in refrigeration bottles using automatic sampling equipment. Solid samples are collected as grab samples using wide mouth jars.

8.3. Grinding or blending of fish samples.

If not otherwise specified by the client, the whole fish (frozen) should be blended or ground to provide a homogeneous sample. The use of a stainless steel meat grinder with a 3- to 5-mm hole size inner plate is recommended. In some circumstances, analysis of fillet or specific organs of fish may be requested by the client. If so requested by the client, the above whole fish requirement is superseded.

Warning: Hearing protection must be worn when grinding samples.

8.4. Samples are stored at 0-4ºC in the dark from the time of collection until extraction (fish tissues must be stored at - 20°C). A measurement of residual chlorine is performed using EPA Methods 330.4 and 330.5. The residual chlorine will be checked at the laboratory for all aqueous samples. If residual chlorine is present in aqueous samples, the sampler or analyst adds 80 mg of sodium thiosulfate per liter of water.

8.5. Sample extraction is performed within 365 days of sampling. Sample analysis is performed within forty (40) days of extraction.

9. QUALITY CONTROL

9.1. The laboratory operates a formal quality assurance program. The minimum requirements of this program consist of an initial demonstration of capability (IDOC), analysis of samples spiked with compounds to evaluate and document data quality, and analysis of standards and blanks as tests of continued performance. The analyst shall make an initial demonstration of the ability to generate acceptable accuracy and precision by this method. This ability is established by generating four laboratory control samples that meet recovery criteria. For each alternative sample matrix, four aliquots of the alternative reference matrix are used.

9.1.1. In recognition of advances that are occurring in analytical technology, and to allow the analyst to overcome sample matrix interferences, the analyst is permitted certain options to improve separations or lower costs of measurements. These options include alternate extraction, concentration, cleanup procedures, and changes in columns and detectors. Unique changes are to be documented using a non-conformance memo. Permanent modifications or additions should be documented using an addendum to this SOP.

9.2. One method blank (MB) must be extracted with every process batch of similar matrix, not to exceed twenty (20) samples. The method blank is an equivalent aliquot of

laboratory reagent water (or appropriate alternate matrix) processed in the same manner and at the same time as the associated samples. Corrective actions must be documented on a non-conformance memo, then implemented, when target analytes are detected in the method blank above the reporting limit or when surrogate or internal standard recoveries are outside control limits. Re-extraction of the blank, other batch QC, and the affected samples are required when the method blank is deemed unacceptable.

Certain programs, such as DOD, may require a more stringent evaluation of the method blank, for instance, that the blank not contain any analytes of interest at a concentration greater than ½ the lower calibration limit.

9.2.1. If the accompanying samples are aqueous, use distilled water as a matrix. Take the method blank through all steps detailed in the analytical procedure.

9.2.2. Use Ottawa sand as the method laboratory matrix when solids are extracted. Use a mixture of Ottawa sand and suitable oil as the matrix when tissues are extracted. Take the method blank through all steps detailed in the analytical procedure.

9.2.3. The method blank must be spiked prior to extraction with the same amount of 13C-labeled internal standards as is added to samples.

9.2.4. If method blank contamination is present, check solvents, reagents, fortification solutions, apparatus and glassware to locate and eliminate the source of contamination before any further samples are extracted and analyzed.

9.2.4.1. OCDD is a ubiquitous laboratory contaminant. A method blank and the associated samples are deemed acceptable if the OCDD concentration is less than 5 times the specified reporting limit. Flag data appropriately. The analyst is expected to investigate and eliminate potential sources of systematic contamination.

9.2.4.2. If a target analyte is detected in the blank but the associated samples are ND (not detected), then the data may be reported, unless otherwise directed by the client. Note the action in the narrative.

9.2.4.3. If a target analyte is detected in the blank, but the concentration of the contaminant in the samples is greater than 10 times the blank concentration, then the data may be reported, unless otherwise directed by the client. Note the action in the narrative.

9.2.4.4. Method blank contamination of non-target analytes (i.e., non-2,3,7,8-substituted isomers) does not require corrective action,

but a non-conformance memo is generated explaining the contamination and impact on sample data. "Totals" concentrations are not flagged to reflect blank contamination because totals are considered estimated values.

9.2.4.5. If the method blank is contaminated with any 2,3,7,8-substituted target analyte above the lower calibration limit (other than the exception noted above for OCDD), and the associated sample contains a positive result for that same analyte above the LCL and less than 10 times the blank concentration. Re-extraction of the associated sample is required, unless otherwise stipulated by the client, where the occurrence shall be documented in the non-conformance memo.

9.2.5. If new batches of reagents or solvents contain interfering contaminants, purify or discard them.

9.3. A Laboratory Control Sample (LCS) must be extracted with every process batch of similar matrix, not to exceed twenty (20) samples. The LCS is an aliquot of laboratory matrix (e.g. water, Ottawa sand, sodium sulfate, etc.) spiked prior to extraction with analytes of known identity and concentration. The LCS is also spiked prior to extraction with the same amount of $^{13}C_{12}$-labeled internal standards as added to the method blank and samples. The LCS must be processed in the same manner and at the same time as the associated samples. Corrective actions must be documented on a Non-Conformance memo, then implemented when recoveries of any spiked analyte is outside control limits provided on the LIMS or by the client. Re-extraction of the blank, other batch QC and all associated samples are required if the LCS is deemed unacceptable. Update the accuracy assessment for each analyte on a periodic basis. Keep control charts for each matrix.

9.4. A second control sample must be prepared for batches containing drinking water samples for the State of Arizona. This will be identified as the laboratory fortified blank (LFB) to differentiate it from the LCS. The LFB is an aliquot of water spiked prior to extraction with analytes at the minimum reporting level (MRL). This level is 5 pg/L for 2,3,7,8-TCDD. The LFB must be prepared with each batch containing drinking waters or once per day, whichever is less. The LFB is also spiked prior to extraction with the same amount of $^{13}C_{12}$-labeled internal standards as added to the method blank and samples. The LFB must be processed in the same manner and at the same time as the associated samples. Corrective actions must be documented on a Non-Conformance memo, then implemented when recoveries of any spiked analyte is outside control limits provided on the LIMS or by the client. Re-extraction of the blank, other batch QC and all associated samples are required if the LCS is deemed unacceptable. Update the accuracy assessment for each analyte on a periodic basis. Keep control charts for each matrix.

9.5. The assessment of matrix effects on method performance, as required by NELAP, is met in Method 1613, as in all isotope dilution techniques, with the use of isotopically labeled compounds. These isotopically labeled compounds are analogs of target analytes and are spiked into each sample. Therefore, matrix effects on method performance can be judged by the recovery of these analogs. Sample analysis acceptance is controlled by the performance of these analogs in each sample. A Matrix Spike/Matrix Spike Duplicate (MS/MSD or MS/SD) pair is extracted at the client's request only and is not required by Method 1613B. An MS/MSD pair are aliquots of a selected field sample spiked with analytes of known identity and concentration. The MS/MSD are also spiked prior to extraction with the same $^{13}C_{12}$-labeled internal standards as the method blank, laboratory control sample, and field samples. The MS/MSD pair shall be processed in the same manner and at the same time as the associated samples. The results obtained from the MS and MSD samples (percent recovery and concentrations of 2,3,7,8-substituted PCDDs/PCDFs) should agree within 50 percent relative difference. Report all results, flag any outliers, and file a non-conformance memo for any outliers. Re-extraction is not required when a MS/MSD pair fail to meet one or more QC criteria. An LCS is extracted to show precision of the extraction and analysis process. (An LCS/LCSD pair may be requested by the client, in which case, these usually replace requests for an MS/MSD pair)

9.6. Duplicates – Upon client request, duplicates may be processed. Locate the sample specified for duplicate analysis, and prepare and analyze a second 10 g soil or sediment sample portion or 1 L water sample, or an appropriate amount of the type of matrix under consideration. A duplicate injection of a sample extract may be performed at the clients request to display instrument precision. The results of the laboratory duplicates (percent recovery and concentrations of 2,3,7,8-substituted PCDD/PCDF compounds) should agree within 50 percent relative difference. Report all results and flag any outliers, re-extraction is not required when RPD limits are not met.

9.7. Field Blanks – Each batch of samples may contain a field blank sample of nominally uncontaminated soil, sediment or water that is to be processed for analysis. Treat this sample as all others.

9.8. Rinsate Samples – In addition to the field blank, a batch of samples may include a rinsate, which is a portion of the solvent (usually trichloroethylene) that was used to rinse sampling equipment. The rinsate is analyzed to assure that the samples were not contaminated by the sampling equipment. The rinsate sample must be processed like a regular sample. Take a 100 mL (± 0.5 mL) portion of the sampling equipment rinse solvent (rinsate sample), filter, if necessary, and add the appropriate amount of internal standard to yield 100 pg/µL in the final extract. Using appropriate methods, concentrate to approximately 10 mL. Before analysis, add the appropriate amount of recovery standard to yield 100 pg/µL in the final extract. Reduce the volume to a final volume of 20 µL, as necessary. No column chromatography is required.

9.9. Recommended Corrective Actions and Troubleshooting Steps

9.9.1. If possible, verify that no error was made while weighing the sample portions.

9.9.2. Review the analytical procedures with the performing laboratory personnel.

10. CALIBRATION AND STANDARDIZATION

10.1. On a daily basis, calibrate any balance to be used in accordance with SOP SAC-QA-0041.

10.2. On a monthly basis, calibrate any auropipettor to be used in accordance with SOP SAC-QA-0004.

11. PROCEDURE

The sample preparation process involves modifying the physical form of the sample so that the PCDDs and PCDFs can be extracted efficiently. In general, the samples must be in a liquid form or in the form of finely divided solids in order for efficient extraction to take place. Samples containing a solid phase and samples containing particle size larger than 1mm require preparation prior to extraction. Because PCDDs/PCDFs are strongly associated with particulates, the preparation of aqueous samples includes filtering, Soxhlet extraction and separatory funnel shakeout. For samples expected or known to contain high levels of the PCDDs and/or PCDFs, the smallest sample size representative of the entire sample should be used, and the sample extract should be diluted, if necessary.

11.1. Preparation of aqueous samples

The extraction procedure for aqueous samples involves filtering the sample, extracting the particulate phase and filtrate separately, and combining the extracts for analysis. The aqueous portion is extracted by shaking with methylene chloride in a separatory funnel. The particulate material is extracted using Soxhlet extraction with Dean-Stark.

Note- If the samples are noted as drinking water and no visible particulates are present, sample filtration is not required.

Note – Drinking water samples must be checked for pH using pH strips. The pH must be adjusted to pH 7-9 with sulfuric acid, as necessary. If any sample is below this range, the pH must be adjusted with sodium hydroxide.

11.1.1. Mark the original level of the sample on the sample bottle for reference. Weigh the sample in the bottle on the top loading balance to +1g.

11.1.2. For each sample, add 1 mL of daily internal standard solution into 2 mL of acetone. Spike the diluted solution into the sample bottle. Cap the bottle and mix the sample by carefully shaking. Allow the sample to equilibrate.

11.1.3. Assemble a Buchner funnel on top of a clean 1 L filtration flask. Apply a vacuum to the flask, and pour the entire contents of the sample bottle through a glass fiber filter in the Buchner funnel, swirling the sample remaining in the bottle to suspend any particulates.

Warning: The use of a vacuum system creates the risk of glassware implosions. Carefully inspect all glassware before each use, and discard or repair any that is cracked, chipped, scratched or otherwise damaged.

11.1.3.1. Rinse the sample bottle twice with 5 mL of $MeCl_2$. Shake to transfer any remaining particulates onto the filter.

11.1.3.2. Rinse any particulates off the sides of the Buchner funnel, with small quantities of $MeCL_2$.

11.1.3.3. Pour aqueous sample back into sample container.

11.1.4. For each sample or sample set (to a maximum of 20 samples) to be extracted during the same twelve hour shift, place two 1.0 liter aliquots of reagent water in 2 clean 1 liter sample bottles. One aliquot will serve as the blank and the other will serve as the laboratory control sample (LCS).

11.1.4.1. Into the blank, add 1mL of daily internal standard solution dissolved into approximately 2 mL of acetone.

11.1.4.2. Into the LCS, add 1 mL of daily internal standard solution and 50 µL of the precision and recovery standard dissolved into 2 mL of acetone.

11.1.5. Extract the filtrates using the procedures in Section 11.2.

11.1.6. Extract the particulates using the procedures in Section 11.3.

11.2. Extraction of filtrates

Extract the aqueous samples, blanks, and PAR aliquots according to the following procedure.

11.2.1. Pour the filtered aqueous sample from the sample bottle flask into a 2 L separatory funnel. Rinse the bottle twice with 5 mL of $MeCl_2$ and add these rinses to the separatory funnel. Add 100 mL methylene chloride to the sample bottle, seal, and shake 60 seconds to rinse the inner surface. Transfer the solvent to the separatory funnel. Weigh the empty bottle on a top loading balance, and compare to weight from Section 11.1.1 to determine initial volume.

11.2.2. Transfer the solvent to the separatory funnel and extract the sample by shaking the funnel for 2 minutes with periodic venting.

Warning: Separatory funnel extraction with DCM is a high-risk activity. Pressure may build rapidly in the funnel. It should be vented after several seconds of shaking, and often enough to prevent build-up of pressure. Chemist performing separatory funnel extraction must wear a face shield over their safety glasses/goggles. Alternatively, the extraction can be performed behind a closed fume hood sash.

11.2.3. Allow the organic layer to separate from the water phase for a minimum of 10 minutes. If the emulsion interface between the layers is more than one-third the volume of the solvent layer, employ mechanical techniques to complete this operation (e.g., a glass stirring rod or centrifuge). Drain the methylene chloride extract into a solvent rinsed glass funnel approximately one-half full of sodium sulfate. Set up the glass funnel so that it will drain directly into a solvent rinsed 500 mL round bottom.

NOTE: Experience with aqueous samples high in dissolved organic materials (e.g., paper mill effluents) has shown that acidification of the sample prior to extraction may reduce the formation of emulsions. Mechanical techniques may still be necessary to complete the phase separation. Refer to Section 11.3 for techniques to decrease or eliminate emulsions.

11.2.4. Extract the water sample two more times using 100 mL of fresh methylene chloride each time. Drain each extract through the funnel containing the sodium sulfate into the round bottom. After the third extraction, rinse the separatory funnel with at least 20 mL of fresh methylene chloride, and drain this rinse through the sodium sulfate into the round bottom, then add C_{14}.

11.2.5. Extract the filter portion according to Section 11.5.

11.2.6. Perform macro concentration as detailed in Section 11.13.

11.2.7. If the sample was filtered and the particulate fraction was also extracted, combine the concentrated extracts of filtrate and particulate prior to proceeding with cleanup or micro concentration steps.

11.3. Decreasing or Eliminating Emulsions

There are several useful methods to decrease or eliminate emulsion in aqueous samples when extracting with DCM. These methods may include stirring with a pipette to manually breakup the emulsions or to transfer the sample into centrifuge tubes and centrifuge at approximately 3000 RPM.

The most useful method is to use a 1:1 $NaOH/H_2O$ solution to change the pH enough to disrupt the emulsion phase, which works 90% of the time. The following procedure describes how to prepare and use the solution to decrease or eliminate emulsions in aqueous samples during the liquid/liquid extraction step.

11.3.1. Prepare the solution according to Section 7.2.4.

11.3.2. Check the pH of the sample to make sure pH is between 3 and 7. If pH is greater than 7, then consult supervisor and client for instructions. Pour approximately 100 mL of 1:1 $NaOH/H_2O$ into the 1:1 NaOH and let stand. Empty the aqueous waste in the LLE waste drum.

11.3.3. Pour the solution with DCM back into the same 2 L separatory funnel and drain the DCM phase through Na_2SO_4 into a 500 mL round bottom. Empty the aqueous waste into the LLE waste drum.

11.4. Preparation of pulp, paper and tissue samples which are subject to grinding, homogenization or blending.

The method of reducing particle size to less then 1 mm is matrix dependent. In general, hard particulates can be reduced by grinding with a mortar and pestle. Softer particulates can be reduced by grinding in a Whiley mill or meat grinder, by homogenization, or by blending.

11.4.1. Each size reducing preparation procedure on each matrix shall be verified by running the tests in Section 13, before the procedure is employed routinely.

11.4.2. The grinding, homogenization, or blending procedures shall be carried out in a fume hood to prevent particles from contaminating the work environment.

11.4.3. Grinding- Tissue samples, certain papers and pulps, slurries and amorphous solids can be ground in a heavy-duty grinder. In some cases, reducing the temperature of the sample to freezing or to dry ice or liquid nitrogen temperatures can aid in the grinding process. Do not allow the sample temperature to exceed 50ºC.

11.4.4. Homogenization or blending – Particles that are not ground effectively, or particles greater than 1 mm in size after grinding, can often be reduced in size by high-speed homogenization or blending.

11.4.5. Extract the aliquots using the procedures in Section 11.5.

11.5. Dean-Stark/Soxhlet (or alternative Soxtherm) extraction of solids – Extract the solid samples, particulates, blanks, and PAR aliquots using the following procedure.

11.5.1. Pre-extract the glassware by heating the flask until the toluene is boiling. When properly adjusted, 1-2 drops of toluene per second will fall from the condenser tip into the receiver. Extract the apparatus for four hours. (Minimum pre-cleaning time is 1 hour)

WARNING: Open the chiller supply valves about 15 minutes before turning on the heating element and ensure that all of the condensors are cold before you turn the heating element on. Check all of the condensors about 15 minutes after starting the heating process to ensure that they are still cold and functioning properly. If this cleaning cycle is to be left unattended (e.g., overnight) the first chemist to arrive the next morning is to check all condensers to ensure that they are still cold and functioning properly.

11.5.2. After pre-extraction, cool and disassemble the apparatus.

11.5.3. Weigh a well-mixed aliquot of each sample, generally 2 –10 g, (of the same matrix type) into a clean Soxhlet thimble. If the material to be extracted is the particulate matter from the filtration of an aqueous sample, add the filter paper to the thimble also.

11.5.4. Spike 1.0 mL of the daily internal standard spiking solution into the sample aliquot(s).

11.5.4.1. Do not spike filter/particulate samples from the aqueous filtration step, because theses extracts will be combined with those of the aqueous portion, and the aqueous portion is spiked already.

11.5.5. For each sample or sample set (to a maximum of 20 samples) to be extracted during the same 12-hour shift, weigh two aliquots of the appropriate reference matrix into clean Soxhlet thimbles. One aliquot will serve as the blank and the other will serve as the laboratory control sample (LCS).

11.5.5.1. Into the blank, add 1 mL of daily internal standard solution.

11.5.5.2. Into the LCS, add 1 mL of daily internal standard solution and 50 µL of the precision and recovery standard.

11.5.5.3. Normal solid samples are spiked with the appropriate daily internal standard solution (the LCS and MS/SD samples are spiked with the daily PAR solution) after the samples are loaded into the Soxhlet (or Soxtherm) apparatus.

11.5.6. Reassemble the pre-extracted apparatus and add a fresh charge of toluene (250 ml – 350 ml) to the receiver and reflux flask.

WARNING: Open the chiller supply valves about 15 minutes before turning on the heating element and ensure that all of the condensors are cold before you turn the heating element on. Check all of the condensors about 15 minutes after starting the heating process to ensure that they are still cold and functioning properly. If this cleaning cycle is to be left unattended (e.g., overnight) the first

chemist to arrive the next morning is to check all condensers to ensure that they are still cold and functioning properly.

11.5.7. Apply power to the heating mantle to begin refluxing. Adjust the reflux rate to match the rate of percolation of sand and silica beds until water removal lessens the restriction to toluene flow. Check the apparatus for foaming frequently during the first 2 hours of extraction. If foaming occurs, reduce the reflux rate until foaming subsides.

11.5.8. Drain the water from the receiver if the receiver fills with water. Check and drain when necessary.

Note: If the receiver holds 10 mL of liquid, and 20 g of a approximately 10% solid sample is being extracted, then approximately 9 mL of water will end up in the receiver. In this case, the receiver will not need to be emptied (insufficient liquid to overflow), but it should be checked. If the sample amount is 50, and the percent solids is still 10%, then 45 mL of water will end up in the receiver. In this case, frequent checking is required, and the receiver will need to be emptied at least 5 times.

11.5.9. Reflux the sample for a minimum of 16 hours. Cool and disassemble the apparatus.

11.5.9.1. Soxtherm uses 120 mL of toluene with a complete cycle time of 2 hours.

11.5.9.2. The solvent reservoir is emptied at the beginning of each shift (or when needed) by opening the reservoir spigot into a waste 2 L jug. This waste solvent is then transferred to the hazardous flammable waste barrel.

11.5.9.3. After the Soxtherm extraction, the solvent volume for each sample will be between 5 mL and 20 mL.

11.5.10. Remove the distilling flask. Drain the liquid from the Dean-Stark receiver.

11.5.10.1. The Soxtherm unit will drain all purged solvent and water into the waste solvent reservoir.

11.5.11. For solid samples, the extract must be concentrated to approximately 10 mL prior to additional cleanup. For the particulates filtered from an aqueous sample, the extract must be concentrated prior to combining with the extract of the filtrate. Therefore, add approximately 100 µL of C_{14} to the round bottom flask and Rotovap to volume of C_{14}.

11.5.11.1. The Soxtherm unit will have between 5 mL and 20 mL of solvent following extraction. Transfer the extract from the extract beaker to a 35 mL culture tube and add approximately 100 uL

C_{14} to each extract and add the Cleanup Recovery Standard as described in Section 11.9.2. Concentrate using a turbo-evaporator to the volume of C_{14}. Temperature setting should be 65ºC and time is dependent on the sample volume.

11.6. Tissue samples follow the same solid extraction procedure described in Section 11.3, except where % Lipids are needed, C_{14} is not added to the sample extract (only to the method blank and LCS). The matrix for the method blank consists of 9 g of pre-cleaned Ottawa sand and 1 g of a suitable oil.

11.6.1. Weigh the concentration vessel with label and boiling chips prior to extraction and record on the benchsheet.

Note: If Soxtherm was used, weigh the 35 mL culture tube.

11.6.2. Weigh the appropriate sample size into the glass fiber thimble and mix thoroughly with sodium sulfate. Extract according to Section 11.5. Concentrate the sample using a rotary evaporator until toluene has been completely removed. Add approximately 25 mL hexane and repeat the concentration via rotary-evaporation to ensure only lipids are present.

Note: If Soxtherm was used, transfer the sample to 35 mL culture tubes and turbo-evaporate to near dryness. Add approximately 5 mL hexane and repeat the concentration via turbo-evaporation until only lipids are present.

11.6.3. Dry the concentration vessel and let stand at room temperature. Re-weigh the concentration vessel and record on the benchsheet.

11.6.4. %Lipids are calculated by the following:

$$\%Lipids = \frac{Final\ Vessel\ Weight - Initial\ Vessel\ Weight}{Sample\ Size} \times 100$$

11.7. Wipe Extractions - Jar Shake Method

11.7.1. Place a pre-cleaned wipe in a French Square jar. This will be the method blank aliquot. Place an additional pre-cleaned wipe in yet another French Square. This will be the LCS aliquot.

11.7.2. Transfer each wipe sample and all accompanying liquid into separate French Square jars or appropriate sized containers

Note: If the container used to deliver the wipe to the laboratory can contain 100 ml of solvent, then the container can be used for the extraction.

11.7.3. Spike all samples, method blank and LCS with an appropriate amount of internal standard. Additionally, spike the LCS with the appropriate amount

of native standard.

11.7.4. Add 100 mL of toluene to each jar and secure with a Teflon-lined cap. Place the closed container onto the flatbed shaker and secure in place. Turn the shaker on such that the shaking motion is aggressive enough to move the liquid through the wipe. Shake for 4 hours.

11.7.5. Filter each sample through a filter funnel with a glasswool plug. Capture the sample into a 500 ml round bottom flask. Add approximately 100 µL of tetradecane and concentrate to approximately 100 µL on a rotary evaporator or TurboVap.

11.7.6. Add approximately 1 mL of hexane or toluene to rinse the sides of the round bottom flask. Using a pipette, withdraw the sample from the round bottom flask and transfer the liquid into a test-tube. Use additional amounts of solvents to rinse the flask. Transfer all the liquid into the test-tube. Insure that all traces of sample in the round bottom flask have been thoroughly rinsed from all surfaces. Bring the sample volume to 8.0 mL or 10.0 mL (or appropriate volume) with the addition of rinse solvent.

11.7.7. Upon completion of the rinsing, cap the test tube and shake vigorously. Take ½ of each sample (or an appropriate amount deemed from the client or other method) and transfer to a culture tube. Archive the remaining sample for future use.

11.7.7.1. If only one analysis is required, then ½ of the sample is archived and the other half is analyzed.

11.7.7.2. If two analyses are required, then 1/3 is archived, 1/3 is used for one test, and 1/3 is used for the second test. For additional analyses, adjust the fractions accordingly.

11.8. Wipe Extractions - Soxhlet Method

11.8.1. Place a pre-cleaned wipe in a pre-cleaned Soxhlet extraction apparatus. This will be the method blank aliquot. Place an additional pre-cleaned wipe in yet another pre-cleaned Soxhlet extraction apparatus. This will be the LCS aliquot.

11.8.2. Transfer each wipe sample and all accompanying liquid into separate precleaned Soxhlet extraction apparatus.

11.8.3. Spike all samples, method blank and LCS with an appropriate amount of internal standard. Additionally, spike the LCS with the appropriate amount of native standard.

11.8.4. Charge the Soxhlet with approximately 300 mL toluene and completely assemble the Soxhlet apparatus. Turn the temperature to the appropriate setting to cycle the toluene. Cycle for 16 hours.

WARNING: Open the chiller supply valves about 15 minutes before turning on the heating element and ensure that all of the condensors are cold before you turn the heating element on. Check all of the condensors about 15 minutes after starting the heating process to ensure that they are still cold and functioning properly. If this cleaning cycle is to be left unattended (e.g., overnight) the first chemist to arrive the next morning is to check all condensers to ensure that they are still cold and functioning properly.

11.8.5. After cycling is complete, turn the heat off and allow the glassware to cool. Remove the round bottom flask. Add approximately 100 µL of tetradecane and concentrate to approximately 100 µL on a rotary evaporator or TurboVap.

11.8.6. Add approximately 1 mL of hexane or toluene to rinse the sides of the round bottom flask. Using a pipette, withdraw the sample from the round bottom flask and transfer the liquid into a test tube. Use additional amounts of solvents to rinse the flask. Transfer all the liquid into the test tube. Insure that all traces of sample in the round bottom flask have been thoroughly rinsed from all surfaces. Bring the sample volume to 8.0 mL or 10.0 mL (or appropriate volume) with the addition of rinse solvent.

11.8.7. Upon completion of the rinsing, cap the test tube and shake vigorously. Take ½ of each sample (or an appropriate amount deemed from the client or other method) and transfer to a culture tube. Archive the remaining sample for future use.

11.8.7.1. If only one analysis is required, then ½ of the sample is archived and the other half is analyzed.

11.8.7.2. If two analyses are required, then 1/3 is archived, 1/3 is used for one test, and 1/3 is used for the second test. For additional analyses, adjust the fractions accordingly.

11.9. Extract cleanup

11.9.1. Cleanup may not be necessary for relatively clean samples (e.g., drinking water). If a cleanup procedure is required, the analyst may use any or all of the procedures below or any other appropriate procedure. Before using a cleanup procedure, the analyst must demonstrate that the requirements of Section 13 can be met using the cleanup procedure. Cleanup may include: back extraction with H_2S0_4 and H_2O, acid, neutral and basic silica gel and alumina are used to remove nonpolar and polar interferences, and/or 5%

Carbon/Silica is used to remove nonpolar interferences.

11.9.2. Spike 1.0 mL of the Cleanup Recovery Standard (CRS) prior to any cleanup into the round bottom flasks containing the samples and QC extracts.

11.10. Back extraction with acid (if required).

11.10.1. Partition the extract against approximately 50 mL of concentrated sulfuric acid. Shake for 2 minutes, periodically venting into a hood. Remove and discard the acid layer. Repeat the acid washing until no color is visible in the aqueous layer, to a maximum of 4 washings. (Minimize contact time between the extract and the acid to prevent dehydration of the PCDDs and PCDFs).

WARNING: The use of separatory funnels during these cleanups is a high-risk activity. A face shield must be worn over safety glasses or goggles.

11.10.2. Repeat the partitioning against DI water and discard the aqueous layer. Most samples will not need the base partition and Sections 11.10.3 and 11.10.4 can be skipped. Consult with department manager or lead analyst if unsure.

11.10.3. Partition the extract against 50 mL of sodium hydroxide in the same way as with the acid. Repeat with base washing until no color is visible in the aqueous layer, to a maximum of four washings.

11.10.4. Repeat the partitioning against DI water and discard the aqueous layer.

11.10.5. Pour each extract through a filling funnel column containing 7 to 10 cm of anhydrous sodium sulfate. Rinse the separatory funnel with 30-50 mL of hexane and pour through the filling funnel. Collect and cleanup the samples and QC aliquots.

11.10.6. See Section 11.13 for macro-concentration procedure.

11.11. IFB Column Cleanup

If further cleanup is necessary, proceed with the following cleanup steps: For NON paper pulp mill solids & effluents proceed with clean-up step exhibit “A”.

Exhibit A

IFB COLUMN CLEANUP

Use 20 mm column for upper column
Use 15 mm column for lower column

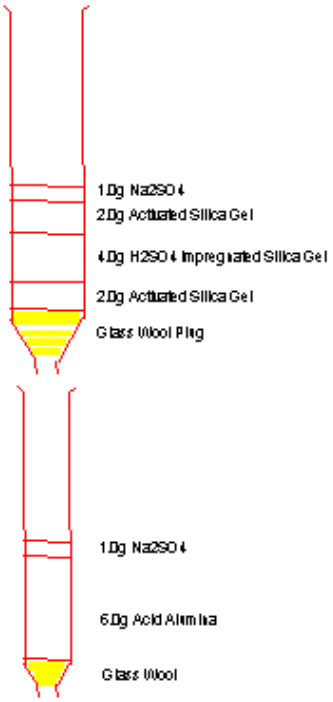

11.11.1. Pre-rinse both columns with hexane 40 mL Top and 20 mL Bottom.

11.11.2. Put one column above the other.

11.11.3. Add extract to the top column - rinse the extract vessel 2 times with 1 mL each of hexane and add to column.

11.11.4. Elute the top column directly onto the bottom column with 50 mL hexane.

11.11.5. Disconnect the upper column from the lower column and elute the lower column with 10 mL of 20/80% $MeCl_2$/hexane. Discard the 20/80% $MeCl_2$/hexane.

11.11.6. Elute the lower column with 30 mL of 65/35% $MeCl_2$/hexane into a 35 mL culture tube and save as the final extract eluate.

11.11.7. Use tetradecane as appropriate. See Section 11.14 for micro-concentration procedure.

11.12. Carbon Column Cleanup - Prepare an Activated Carbon on Silica Gel column as described below.

11.12.1. Use a pre-cut D2 column made from vendor

11.12.2. Push a glasswool plug down to the 3 inch mark.

11.12.3. Add 1 g of 5% Activated Carbon/silica and top with another glasswool plug.

11.12.4. Pre-elute with 5 mL 1:1 MeCl2: Cyclohexane. Direction " A" (carbon on lower end of the column)

11.12.5. Turn column over to the “B” direction (carbon on the top end of the column) and pre-elute with 5 mL 1:1 MeCl2: Cyclohexane.

11.12.6. Discard pre-eluates.

11.12.7. Dilute extract to 1 mL with hexane and transfer to the column.

11.12.8. Rinse sample vial onto the column with 2 x 2 mL 1:1 MeCl2: Cyclohexane.

11.12.9. Elute with: 6 mL 1:1 MeCl2:Cyclohexane then with 5 mL 75:20:5 MeCl2:MeOH:Benzene.

11.12.10. Discard eluates.

11.12.11. Turn the column over to the “A” Direction and elute with 25 mL toluene.

11.12.12. See Section 11.14 for micro-concentration procedure.

11.12.13. See Section 11.15 for N2 concentration procedure.

11.13. Macro-concentration

Concentrate the extracts in separate 100 mL round bottom flasks on rotary evaporator.

11.13.1. Assemble the rotary evaporator according to manufacture’s instructions, and warm the water bath (60° C for DCM and 75° C for toluene and hexane). On a daily basis, preclean the rotary evaporator by solvent rinsing. Between samples, 2-3 rinses of toluene followed by a 2-3 mL rinse of hexane should be rinsed down the feed tube into a waste beaker.

11.13.2. Attach the round bottom flask containing the sample extract to the rotary evaporator. Slowly apply vacuum to the system, and begin rotating the sample flask.

11.13.3. Lower the flask into the water bath and adjust the speed of rotation and the temperature as required. At the proper rate of concentration, the flow of solvent into the receiving flask will be steady, but no bumping or visible boiling of the extract will occur.

NOTE: If the rate of concentration is too fast, analyte loss may occur.

11.14. Micro-concentration

Concentrate the extracts in 35 mL culture tubes in a turbo-evaporator. The turbo-evaporator model that the laboratory uses can hold up to 50-35 mL culture tubes. Other turbo-evaporator models can be used that may or may not have the same culture tube sizes and/or capacity. Adjust temperature according to solvent (65ºC for toluene and 50ºC for hexane or hexane/DCM mixtures)

11.14.1. The evaporating times are dependent on sample volume and solvent. The following are examples and can change from sample to sample. Each sample should be checked in intermittent intervals to make sure samples do not go dry.

11.14.2. When evaporating 30 mL toluene, it will normally take approximately 30-50 minutes with the temperature setting described above.

11.14.3. When evaporating 30 mL hexane/DCM, it will normally take approximately 10-20 minutes with the temperature setting described above.

11.15. N_2 concentration

11.15.1. Transfer extracts to a micro concentration vial (test tubes and other small vessels may also be used)

11.15.2. Fit a glass concentration apparatus (or equivalent – apparatus can also be made of alternative material free from interferences) with multiple ports.

11.15.2.1. If the concentration apparatus has large orifices for each port, an interference free tube can be placed on each tube fitted with a Pasteur pipette to reduce the size of each port.

11.15.3. Apply a gentle stream of N_2 to the samples making sure turbulence is kept to a minimum.

11.15.4. Concentrate the sample to the necessary volume. Standard volume is 20 µL. Alternative final volumes may be used with client request and/or approval.

12. CALCULATIONS/DATA REDUCTION

12.1. Not applicable

13. METHOD PERFORMANCE

13.1. The group/team leader has the responsibility to ensure that this procedure is performed by an associate, who has been properly trained in its use and has the required experience.

13.2. Method validation information (where applicable) in the form of laboratory demonstrations of capabilities is maintained for this method in the laboratory QC files.

14. POLLUTION CONTROL

14.1. Standards should be prepared in volumes consistent with laboratory use to minimize the volume of expired standards that must be discarded.

14.2. The use of Roto-vaps and Turbo-vaps for some concentration steps, rather than Kuderna-Danish reduction, allows extraction solvents to be collected and disposed of rather than released to the atmosphere.

14.3. All waste will be disposed of in accordance with Federal, State and Local regulations. Where reasonably feasible, technological changes have been implemented to minimize the potential for pollution of the environment.

14.4. Do not allow waste solvent to vent into the hoods. All solvent waste is stored in capped containers unless they are being filled.

14.5. Transfer waste solvent from collection cups (tri-pour and similar containers) to jugs and/or carboys as quickly as possible to minimize evaporation.

15. WASTE MANAGEMENT

The following waste streams are produced when this method is carried out.

15.1. Extracted aqueous/leachate samples contaminated with methylene chloride are collected at the fume hood in a 5-gallon or smaller carboy. If the samples are not at a neutral pH, add small quantities of sodium bicarbonate to bring the waste to neutral. Stir well. Once neutralized, immediately pour the carboy contents into a blue plastic LLE drum in the H3 closet. When full to between one and four inches of the top, or after no more than 75 days, move the LLE drum to the waste collection area for shipment.

15.2. Extracted soil samples and thimbles, paper funnel filters, glass wool, sodium sulfate, assorted disposable glassware, fish/crawfish/paper pulp or similar materials contaminated with methylene chloride and/or other organic solvents. Silica gel, alumina, carbon and sodium sulfate, from column clean-ups, contaminated with various solvents and eluates. Dump the materials into a contaminated lab trash bucket. When the bucket is full or at the end of the day, tie the plastic bag liner shut and put the lab trash into the steel collection drum in the H3 closet. When the drum is full or after no more than 75 days, move it to the waste collection area for shipment.

15.3. Flammable solvent waste generated during glassware and sodium sulfate cleaning. Flammable solvent waste collected during roto-vap/turbo-vap reduction of extracted samples. Keep waste flammable solvents separated from waste methylene chloride. Collect the waste flammable solvents in tripours during use. Empty the tripours into a 1-liter to 4-liter carboy at the fume hood. When the carboy is full, or at the end of your shift, whichever comes first, empty the carboy into the steel flammable solvent drum in the H3 closet. When full to between one and four inches of the top, or after no more than 75 days, move the steel drum to the waste collection area for shipment.

15.4. Waste methylene chloride generated during glassware rinsing and sodium sulfate pre-rinsing. Waste methylene chloride collected during roto-rap/turbo-vap reduction of extracted samples. Keep waste methylene chloride separated from waste flammable solvents. Collect the waste methylene chloride in tripours during use. Empty the tripours into a 1-liter to 4-liter carboy at the fume hood. When the carboy is full, or at the end of your shift, whichever comes first, empty the carboy into the steel methylene chloride drum in the H3 closet. When the drum is full to between one and four inches of the top, or after no more than 75 days, move the steel drum to the waste collection area for shipment.

15.5. Contaminated sulfuric acid used during extract cleanup. Collect the used sulfuric acid in empty, 2.5-liter, plastic coated jars. When full or after one year, whichever comes first, transfer these jars to the waste collection area for shipment.

15.6. Contaminated sodium hydroxide used during extract cleanup. Collect the used sodium hydroxide in empty, 2.5-liter, plastic coated jars. When full or after one year, whichever comes first, transfer these jars to the waste collection area for shipment.

15.7. Contaminated distilled water used during extract cleanup. Collect the contaminated water in a 1-liter to 4-liter carboy at the fume hood. When the carboy is full, or at the end of your shift, whichever comes first, empty the carboy into the plastic LLE drum in the H3 closet. When full to between one and four inches of the top, or after no more than 75 days, move the plastic drum to the waste collection area for shipment.

16. REFERENCES/CROSS REFERENCES

16.1. EPA Method 1613, Revision A, October 1990.

16.2. EPA Method 1613, Revision B, October 1994.

16.3. Federal Register, 40 CFR Part 136 App. A (July 2005).

17. METHOD MODIFICATIONS

18. ATTACHMENTS

19. REVISON HISTORY

19.1. WS-IDP-0007, Revision 1, 02/28/2008

19.1.1. The SOP format was updated to TestAmerica format.

19.1.2. Sample preparation was removed to a separate SOP from SAC-ID-0007.

19.1.3. Added Laboratory Fortified Blank for Arizona drinking water samples (Section 9.4.4).

Table 1
Analyte List

CDD/CDF
2,3,7,8-TCDF
2,3,7,8-TCDD
1,2,3,7,8-PeCDF
2,3,4,7,8-PeCDF
1,2,3,7,8-PeCDD
1,2,3,4,7,8-HxCDF
1,2,3,6,7,8-HxCDF
1,2,3,7,8,9-HxCDF
2,3,4,6,7,8-HxCDF
1,2,3,4,7,8-HxCDD
1,2,3,6,7,8-HxCDD
1,2,3,7,8,9-HxCDD
1,2,3,4,6,7,8-HpCDF
1,2,3,4,7,8,9-HpCDF
1,2,3,4,6,7,8-HpCDD
OCDF
OCDD

Table 2
Concentration of Stock and Spiking Solutions Containing CDDS/CDDFs and Labeled Compounds

Analyte	Type	Labeled Compound Stock Solution (ng/mL=pg/uL)	Labeled Compound Spiking Solution[a] (ng/mL=pg/uL)	PAR Stock Solution (ng/mL=pg/uL)	PAR Spiking Solution[b] (ng/mL=pg/uL)
Internal Standard					
$^{13}C_{12}$-2,3,7,8-TCDD	IS	100	2	--	--
$^{13}C_{12}$-1,2,3,7,8-PeCDD	IS	100	2	--	--
$^{13}C_{12}$-1,2,3,4,7,8-HxCDD	IS	100	2	--	--
$^{13}C_{12}$-1,2,3,6,7,8-HxCDD	IS	100	2	--	--
$^{13}C_{12}$-1,2,3,4,6,7,8-HpCDD	IS	100	2	--	--
$^{13}C_{12}$-OCDD	IS	100	4	--	--
$^{13}C_{12}$-2,3,7,8-TCDF	IS	100	2	--	--
$^{13}C_{12}$-1,2,3,7,8-PeCDF	IS	100	2	--	--
$^{13}C_{12}$-2,3,4,7,8-PeCDF	IS	100	2	--	--
$^{13}C_{12}$-1,2,3,4,7,8-HxCDF	IS	100	2	--	--
$^{13}C_{12}$-1,2,3,6,7,8-HxCDF	IS	100	2	--	--
$^{13}C_{12}$-2,3,4,6,7,8-HxCDF	IS	100	2	--	--
$^{13}C_{12}$-1,2,3,7,8,9-HxCDF	IS	100	2	--	--
$^{13}C_{12}$-1,2,3,4,6,7,8-HpCDF	IS	100	2	--	--
$^{13}C_{12}$-1,2,3,4,7,8,9-HpCDF	IS	100	2	--	--
Recovery Standard					
$^{13}C_{12}$-1,2,3,4-TCDD	RS	200	100[d]	--	--
$^{13}C_{12}$-1,2,3,7,8,9-HxCDD	RS	200	100[d]	--	--
Cleanup Recovery Standard					
$^{37}Cl_4$-2,3,7,8-TCDD	CRS	200	0.8[c]	--	--
Native Standard					
2,3,7,8-TCDD	NS	--	--	40	4
1,2,3,7,8-PeCDD	NS	--	--	200	20
1,2,3,4,7,8-HxCDD	NS	--	--	200	20
1,2,3,6,7,8-HxCDD	NS	--	--	200	20
1,2,3,7,8,9-HxCDD	NS	--	--	200	20
1,2,3,4,6,7,8-HpCDD	NS	--	--	200	20
OCDD	NS	--	--	400	40
2,3,7,8-TCDF	NS	--	--	40	4
1,2,3,7,8-PeCDF	NS	--	--	200	20
2,3,4,7,8-PeCDF	NS	--	--	200	20
1,2,3,4,7,8-HxCDF	NS	--	--	200	20
1,2,3,6,7,8-HxCDF	NS	--	--	200	20
2,3,4,6,7,8-HxCDF	NS	--	--	200	20
1,2,3,7,8,9-HxCDF	NS	--	--	200	20
1,2,3,4,6,7,8-HpCDF	NS	--	--	200	20
1,2,3,4,7,8,9-HpCDF	NS	--	--	200	20
OCDF	NS	--	--	400	40

(a) typical spike amount is 1.0 mL
(b) typical spike amount is 50 uL
(c) typical spike amount is 1.0 mL
(d) typical spike amount is 20 uL

Table 3
Suggested Sample Quantities to be Extracted for Various Matrices [1]

Sample Matrix [1]		**Example**	**Percent Solids**	**Phase**	**Quantity**
Single-Phase					
	Aqueous	Drinking water	<1% Solid	[3]	1000mL
		Ground water	<1% Solid	[2]	1000mL
		Treated wastewater	<1% Solid	[2]	1000mL
	Solid	Dry Soil	>20% Solid	Solid	10g
		Compost	>20% Solid	Solid	10g
		Ash	>20% Solid	Solid	10g
	Organic	Waste solvent	<1% Solid	Organic	0.1g
		Waste oil	<1% Solid	Organic	0.1g
		Organic polymer	<1% Solid	Organic	0.1g
	Tissue	Fish & Wildlife		Organic	10g
		Food stuff		Organic	10g
		Human adipose		Organic	10g
Multi-Phase					
Liquid/Solid	Aqueous/Solid	Wet soil	1% Solid<x<30% Solid	Solid	10g
		Untreated effluent	1% Solid<x<30% Solid	Solid	10g
		Digested municipal sludge	1% Solid<x<30% Solid	Solid	5g
		Paper pulp	Dry and homogenize	Solid	10g
		Paper pulp-Sludge	Dry and homogenize	Solid	5g
	Organic/Solid	Industrial sludge	All	All	5g
		Oily waste	All	All	1g
Liquid/Liquid	Aqueous/Organic	In-process effluent	<1% Solid	Organic	1g
		Untreated effluent	<1% Solid	Organic	1g
		Drum waste	<1% Solid	Organic	1g
	Aqueous/Organic /Solid	Untreated effluent	>1% Solid	Organic/Solid	1g
		Drum waste	>1% Solid	Organic/Solid	1g

(1) The sample matrix may be amorphous for some samples. In general, when the CDDs/CDFs are in contact with a multiphase system in which one of the phases is water, they will be preferentially dispersed in or adsorbed on the alternate phase because of their low solubility in water.
(2) Aqueous samples are filtered after spiking with the labeled compounds. The filtrate and the solid phase trapped on the filter are extracted separately, and the extracts are combined for cleanup and analysis.
(3) Drinking water is filtered only if there are particulates and or have color.

Revised by CF1, 10/16/06
Reviewed 12/11/06

Revised by CF2, 12/26/06
Revised by CF3, 3/12/07

Title: Sample Receipt and Procedures

Approvals (Signature/Date):

1/17/2008	1/17/08
Mike Flournoy Technical Manager Date	Joe Schairer Health & Safety Manager / Coordinator Date
1/17/08	1/17/08
Pamela Schemmer Quality Assurance Manager Date	Karla Buechler Laboratory Director Date

This SOP was previously identified as SAC-QA-0003.

Any reference within this document to Severn Trent Laboratories, Inc. or STL, should be understood to refer to TestAmerica Laboratories, Inc. (formerly known as Severn Trent Laboratories, Inc.)

Copyright Information:
This documentation has been prepared by TestAmerica Laboratories, Inc. and its affiliates ("TestAmerica"), solely for their own use and the use of their customers in evaluating their qualifications and capabilities in connection with a particular project. The user of this document agrees by its acceptance to return it to TestAmerica upon request and not to reproduce, copy, lend, or otherwise disclose its contents, directly or indirectly, and not to use if for any other purpose other than that for which it was specifically provided. The user also agrees that where consultants or other outside parties are involved in the evaluation process, access to these documents shall not be given to said parties unless those parties also specifically agree to these conditions.

THIS DOCUMENT CONTAINS VALUABLE CONFIDENTIAL AND PROPRIETARY INFORMATION. DISCLOSURE, USE OR REPRODUCTION OF THESE MATERIALS WITHOUT THE WRITTEN AUTHORIZATION OF TESTAMERICA IS STRICTLY PROHIBITED. THIS UNPUBLISHED WORK BY TESTAMERICA IS PROTECTED BY STATE AND FEDERAL LAW OF THE UNITED STATES. IF PUBLICATION OF THIS WORK SHOULD OCCUR THE FOLLOWING NOTICE SHALL APPLY:

©COPYRIGHT 2008 TESTAMERICA LABORATORIES, INC. ALL RIGHTS RESERVED.

1. PURPOSE

1.1. This SOP describes the procedures for laboratory chain-of-custody, including receipt and acceptance of sample shipments, storage requirements, generation of computer records, and corrective actions for sample receipt anomalies.

2. RESPONSIBILITIES

2.1. It is the responsibility of the employee to perform the procedure described here in full compliance with this SOP.

2.2. It is the responsibility of the Laboratory Director, QA Manager, and Departmental Supervisors of this facility to ensure that the analysis is performed in full compliance with this SOP. It is also their responsibility to supply adequate training, materials, and equipment to enable the employee to perform this SOP correctly.

3. DEFINITIONS

3.1. Refer to Glossary in the STL Sacramento LQM.

3.2. Legal chain of custody: Based on client request, legal chain of custody may be generated to support litigation. Legal chain of custody are generated per the Manual for the Certification of Laboratories Analyzing Drinking Water, Fifth edition, January 2005, Appendix A.

4. INTERFERENCES

4.1. Any checks on samples, or storage of samples, should be done to eliminate any cross contamination.

5. SAFETY

5.1. Employees must abide by the policies and procedures in the Corporate Safety Manual, Radiation Safety Manual, Sacramento Supplement to the CSM, and this document. All work must be stopped in the event of a known or potential compromise to the health or safety of an associate. The situation must be reported immediately to a supervisor, the EH&S Staff, or a senior manager.

5.2. SPECIFIC SAFETY CONCERNS OR REQUIREMENTS

5.2.1. Eye protection that satisfies ANSI Z87.1, laboratory coat, and chemically resistant gloves must be worn while samples, standards, solvents, and reagents are being handled. Latex, vinyl and nitrile gloves all provide sufficient protection when handling closed sample containers.

5.2.2. Exposure to chemicals must be maintained **as low as reasonably achievable**; therefore all samples must be opened, transferred, sub-sampled and prepared in a fume hood. Solvent and waste containers will be kept closed unless transfers are being made.

5.2.3. Laboratory procedures such as repetitive use of pipettes, repetitive subsampling, moving heavy shipping containers, unloading shipping containers, and manipulation of glassware represent a significant potential for repetitive motion or other ergonomic injuries. Laboratory associates performing these procedures are in the best position to realize when they are at risk for these types of injuries. Whenever a situation is found in which an employee is performing the same repetitive motion, the employee shall immediately bring this to the attention of their supervisor, manager, or the EH&S staff. The task will be analyzed to determine a better means of accomplishing it.

5.2.4. Safety policies apply to ALL sample administration visitors, including auditors, employees, couriers or clients who deliver samples.

5.2.5. Some types of biological samples may present special hazards. Refer to Appendix 11 of this document for more information.

5.2.6. Samples containing or potentially containing chemical warfare agents or degredates present a special hazard. Review Appendix 10 of this document before opening any coolers containing these types of samples.

5.3. PRIMARY MATERIALS USED

5.3.1. The following is a list of the materials used to preserve samples that are received in sample administration, which have a serious or significant hazard rating. Samples arrive at sample administration preserved in the field; these materials are not found or used in the sample administration area outside of samples. NOTE: This list does not include all hazards that may be present in samples. The table contains a summary of the primary hazards listed in the MSDS for each of the materials listed in the table. Employees must review the information in the MSDS for each material before using it for the first time or when there are major changes to the MSDS.

Material (1)	Hazards	Exposure Limit (2)	Signs and symptoms of exposure
Sulfuric Acid (1)	Corrosive Oxidizer Dehydra-dator	1 mg/m^3	This material will cause burns if comes into contact with the skin or eyes. Inhalation of vapors will cause irritation of the nasal and respiratory system.
Sodium Hydroxide	Corrosive Poison	2 ppm, 5 mg/m^3	This material will cause burns if comes into contact with the skin or eyes. Inhalation of Sodium Hydroxide dust will cause irritation of the nasal and respiratory system.
Hydrochloric Acid (1)	Corrosive Poison	5 ppm-Ceiling	Inhalation of vapors can cause coughing, choking, inflammation of the nose, throat, and upper respiratory tract, and in severe cases, pulmonary edema, circulatory failure, and death. Can cause redness, pain, and severe skin burns. Vapors are irritating and may cause damage to the eyes. Contact may cause severe burns and permanent eye damage.
Isopropyl Alcohol	Flammable	400 ppm - TWA	Flammable liquid and vapor. Inhalation of vapors or ingestion can have narcotic effect, with dizziness, drowsiness, and headache. Exposing eyes to either vapors or splashed liquid can result in severe irritation, corneal burns and eye damage.
Nitric Acid (1)	Corrosive Oxidizer Poison	2 ppm-TWA 4 ppm-STEL	Nitric acid is extremely hazardous. Inhalation of vapors can cause breathing difficulties and lead to pneumonia and pulmonary edema, which may be fatal. Other symptoms may include coughing, choking, and irritation of the nose, throat, and respiratory tract. Can cause redness, pain, and severe skin burns. Concentrated solutions cause deep ulcers and stain skin a yellow or yellow-brown color. Vapors are irritating and may cause damage to the eyes. Contact may cause severe burns and permanent eye damage.
Sodium Bisulfate	Corrosive	None listed	Contact may cause skin/eye burns. Inhalation can cause irritation of the respiratory tract with burning pain in the nose and throat, coughing, wheezing and shortness of breath. Causes chemical burns to the respiratory tract. May cause fatal spasms, inflammation or pulmonary/respiratory edema.
Zinc Acetate	Irritant	None Listed	Symptoms of skin or eye contact include redness, itching and pain.
1 – Always add acid to water to prevent violent reactions.			
2 – Exposure limit refers to the OSHA regulatory exposure limit.			

6. EQUIPMENT AND SUPPLIES

6.1. IR thermometer calibrated at a minimum of once per quarter against an NIST reference.

6.2. Filament thermometer calibrated at a minimum of once annually against an NIST reference.

6.3. Probe thermometer capable of reading to 0.1°C calibrated at a minimum of once annually against an NIST reference.

6.4. pH paper (Range pH 2 to pH 12 or equivalent)

6.5. Pipette

6.6. Calibrated balance capable of reading 0.1g

6.7. Packing material including wet ice

7. STANDARDS AND REAGENTS

7.1. Not applicable. Use of preserves or other reagents is performed in laboratory areas.

8. SAMPLE COLLECTION, PRESERVATION, AND STORAGE

8.1. This SOP does not address sample collection.

8.2. Preservation and storage of samples is determined by each method. See method SOPs, and section

9. QUALITY CONTROL

9.1. Not applicable.

10. CALIBRATION

10.1. Thermometers are calibrated according to SAC-QA-0016.

10.2. All electronically operated thermometers (including IR thermometers) must have their calibration verified each day of use (see SAC-QA-0016, Thermometer Calibration for further details). IR thermometers are to be calibrated quarterly against a " NIST" reference.

11. PROCEDURE

11.1. Any unauthorized deviations from this procedure must also be documented as a nonconformance, with a cause and corrective action described (see SAC-QA-0023, Nonconformance and Corrective Action Systems for further details).

11.2. Before samples are received, the laboratory should provide the client's sample collection personnel the STL Sacramento Sample Receiving Acceptance Policy (see appendix 1). It is sent along with the bottle order.

11.3. Receiving shipment

11.3.1. Verify accuracy of each shipping container's delivery address. Note if the custody seal number is present and the seal's condition.

11.3.2. Record each delivery received in the computer entry SRL (Sample Receipt Logbook), see appendix 2 for screen-print. A single shipping container may be listed as one or several lots. Record the client and/or shipper name(s), receipt date and time. If the lot number is generated for the shipment at this time, record the number in the far-left column. If a single shipment is subdivided into multiple lots at a later time, all lot numbers are listed on the original logbook entry. In the event of multiple package deliveries, the receipt time is the carrier's time of arrival, not the time when each package is handled. This document is required for legal chain of custody.

11.3.3. Initiate a LRC (Lot Receipt Checklist) for each sample shipment (see appendix 3). Each person who completes an entry must also enter initials and dates in the corresponding columns. For non-applicable items, enter " N/A" , with initials and dates. The initiator must complete entries A, B, and F-K, unless responsibility for the shipment is immediately passed to another technician.

11.3.3.1. Item A: Enter client and assigned PM.

11.3.3.2. Item B: Enter SRL number as generated by the SRL program.

11.3.3.3. Item F: Enter date shipment is received and initial.

11.3.3.4. Item G: Enter time shipment is received.

11.3.3.5. Item H: Enter carrier (method of delivery). " Over the counter" indicates a delivery made directly to the laboratory

by a client.

11.3.3.6. Item I: Enter condition of custody seal (if present). Enter pre-printed custody seal number or " N/A" . Custody seals are defined by the presence of the shipper's signature accompanied with date/time. Note the presence of custody tape (which will have no space for entries and crumbles when removed). This is also required for legal chain of custody.

11.3.3.7. Item J: Record ownership/disposition of shipping container. Non-company containers must be returned to client if possible.

11.4. Opening shipment

11.4.1. Following safety policies, open the shipping container and remove paper work. Bechtel, Navy Clean or Clean 3 projects must all be opened in the hood. In addition, shipments accompanied by MSDS documentation, shipments of concentrated product, or exhibiting strong, noxious odors must be opened in the hood. If a shipment contains broken or leaking samples, place the container in fume hood and notify the project manager via e-mail. Digital pictures may be taken of the broken samples and the files attached to the project manager’s email. Dispose of broken samples according to the facility hazardous waste procedures. The Hazardous Waste Specialist or Environmental Health and Safety Coordinator should be contacted if additional information is required.

11.4.2. Assume custody of the samples by signing and dating the COC in the section marked " Received for Lab By" or " Received By" . This is also required for legal chain of custody. Immediately after opening, ascertain if ice or artificial coolants are present. Measure temperature and record results under item K of the LRC.

11.4.2.1. Use the infrared thermometer by directing the thermometer at sample containers making sure no labels or packaging materials are interfering with the direct contact of the infrared beam and the sample container. If the COC lists a temperature blank, or one is present in the shipping container, locate the blank and measure the temperature. Take temperatures of random samples in the cooler to determine the average temperature. Measure temperature and record results under item K of the LRC.

11.4.2.2. A non-conformance memo must be entered if the temperature reading is below 2°C or above 6°C. This notifies the project manager via email and provides a hard copy to include with the lot folder. In the non-conformance memo software, be sure to include the client ID for all samples that are associated with a temperature exceedance.

Note: Wisconsin compliant samples must be maintained at temperatures $\leq$4ºC.

11.4.2.3. Some sample matrices do not require cooling during transit. Situations where acceptable temperature range exceedance may be expected include, but are not limited to:

- Samples delivered within six hours of close of daily sampling event; a non-conformance memo must be filed in this case, indicating sampling and receipt time.
- Paperboard and dry pulp samples; non-conformance memo not necessary.
- Dry incinerator ashes; non-conformance memo not necessary.
- Samples for metals analysis only; non-conformance memo not necessary. Note: This does not apply to soil samples for mercury analysis. Such samples must be shipped on ice at 4 ºC, and narrated with a non-conformance memo if not on ice.
- Dry product samples; non-conformance memo not necessary.

11.4.3. Verify that the sample collector's name appears on the COC. Record the result under item K. Record the pre-printed COC number (if a COC is present) and the sequential document number under item K of the LRC. Examine accompanying documentation. If documentation is absent and the shipment arrival was unexpected, contact the lead project manager for assistance.

11.5. Prioritizing workload

11.5.1. Examine the analyses requested and the sampling dates/times. Be aware of any notation for expected Turn-Around-Time (TAT), or a due date that is less than 14 days, or hold times that will expire within 72 hours. Most aqueous organic analyses require extraction within seven days of sampling. If three days or less are remaining, consider the lot to be a priority and file in a manila folder (Methods 8280 and 8290 dioxin/furan

analyses are an exception, requiring extraction within thirty days).

11.5.2. Any analysis that has a standard holding time of forty-eight hours or less is considered a " Short-Holding Time" (SHT) analysis. These are reported to the affected department immediately with the Short Holding Time Test notification (see appendix 4). The receiving chemist initials and dates item O of the LRC. Any requested TAT of fourteen days or less is also considered a priority.

11.5.3. Prioritize the shipment according to the TAT, while ensuring extraction holding times have not been exceeded. " RUSH" projects are placed in a red folder, SHT analyses are processed immediately, projects requiring shipment of subcontracted out samples are placed in purple folders, projects requiring project manager's immediate attention are placed in blue folders while all other projects are placed in manila folders. If a project with a short TAT also includes SHT analyses, file in a red folder.

11.6. Sample processing

11.6.1. Select the project with the highest priority:

1. Short holds are processed immediately.
2. Blue folder; (requires project manager's immediate attention)
3. Red folder; (rush)
4. Purple folders; (to be shipped out)
5. Manila folder; (normal TAT)

11.6.2. Read shipment documentation. Ideally, samples are to have possession documented on a COC form. The COC will identify samples individually by alphanumeric designators, list sampling dates/times for each sample, requested analyses and document possession. Signatures of possession qualify samples as having been " received under Chain-of-Custody" . A Letter-of-Transmittal is also accepted as definitive documentation. Other forms of documentation include Request for Analysis, Shipping Order, Purchase Order, and various computer listings of sample information. If no documentation that lists sample identifications exists, complete a COC when accepting the samples.

11.6.3. Check the samples against the COC for accuracy (e.g., sample ID, collection date/time, etc.). If the samples have not been received in good

condition, it must be noted on the LRC and an NCM must be filed. All discrepancies must be noted as well, including the lack of a relinquishing signature from the shipper.

NOTE: Good condition is loosely defined as all containers intact with no obvious discrepancies present. The shipment is estimated at this time to be viable; what is being requested coincides with what has been received. Temperature exceedances and minor discrepancies become issues when so specified by contract or client instruction. The presence of bubbles in volatile containers is documented. All such observations must be documented on custody chains, the LRC (item Q), and by using the non-conformance memo software.

11.6.4. Complete the bottle inventory on the project receipt checklist (see appendix 5). Compare the containers and their state of preservation with the list of analyses requested. Although some exceptions are permitted regarding particular clients, container types must compare to those listed in the STL Sacramento Laboratory Quality Manual tables 8.5-1, 8.5-2 and 8.5-3. Discrepancies of this nature must also be annotated on the COC and a non-conformance memo filed. Complete item P and Q.

11.6.5. For all work sampled at or concerning government property, any federal projects, or as specified in client QAPjPs, the pH of the preserved aqueous samples must be checked and recorded, except for the VOA vials. The pH is noted as < 2 or > 12 with the preservative type following (example: pH< 2 H_2SO_4). Complete item L on LRC.

11.6.5.1. After placing the samples in the hood, invert the sample container three times, remove the cap, insert a clean pipette into the sample container and remove a small amount. Release a droplet of the aliquot on a fresh piece of pH indicator paper. Compare against the pH color grid table located on the pH strip container. Do not reuse the pipette. Use a clean pipette for each container. Recheck readings that indicate samples were unpreserved when they should have been. Note discrepancies on the COC. Notify the project manager and file a non-conformance memo for the concerned sample. Transport samples to the general chemistry or metals departments when sample preservation is necessary as a corrective action. Complete item L and O on LRC.

11.6.6. Obtain a lot number and quote number. Complete items C and D of LRC.

11.6.7. Note storage location in item E of LRC. Designate a storage location using the following guide:

11.6.7.1. V - volatile containers awaiting transfer to the VOA group refrigerators.

11.6.7.2. F2 - any samples requiring freezing, including plant/animal tissues;

11.6.7.3. R2 - any samples where secondary containment in Ziploc bags is deemed necessary due to smells, spillage, degradation of container exterior or suspected high concentration of analytes.

11.6.7.4. C1 - dry pulp or paper samples;

11.6.7.5. EPA1 - soil samples received from the Environmental Protection Agency, solvents, air toxics projects for method 29 or clients requiring dioxin work under SOW DFLM01.1.

11.6.7.6. WR1/WF1 - refrigerator/freezer storage dedicated to explosives & specialty chemicals projects.

NOTE: Location selections (specify shelf by letter, Example: W4A).

NOTE: Dioxin soil samples received in clear glass jars must be stored in boxes to protect from light.

11.6.8. Label sample containers. Be certain the labels adhere to containers. Attempt to leave all client label information exposed. However, when impossible to do so, affix label so that at least the client ID, sampling date/time, and preservative are showing. Preprinted laboratory names may be covered with no consequence. If label adhesive is insufficient, use cellophane tape to secure label. Place sample in Ziploc bag when storage location is R2. Initial/date the LRC item M. Labeling may be peer reviewed whenever the complexity of the project warrants a second check to ensure accuracy. A peer compares the order of the samples to the documentation and ensures that all containers of a sample have the same sample number and are sequential. The reviewer then initials/dates the LRC (item N). If no review is performed, the labeler completes item N.

11.6.9. Circumstances where a review is warranted include:

11.6.9.1. A large number of samples are present;

11.6.9.2. Many containers per sample are present;

11.6.9.3. VOA containers are present;

11.6.9.4. Client identifications are illegible or confusing;

11.6.9.5. A review is requested by a STL Sacramento employee;

11.7. Shipping container return

11.7.1. Broken samples and packing material contaminated with spilled samples MUST be disposed of as hazardous lab trash. Shipping containers must be decontaminated before being put back into use. Decontamination procedures will depend on what was spilled. See EH&S staff for specific instructions.

11.7.2. Except when discarded, shipping containers are cleaned in sample administration and either taken to bottle prep or returned to the client. Containers belonging to STL Sacramento are marked with a permanent marker with an easily identified tracking number. If the container belongs to a client, be certain the return address is recorded before stripping the container of used tape and labels. All hazardous materials labeling must **be removed or defaced** in some way. Dry the interior of the container if wet, replace packing and return to bottle prep.

11.7.3. Packing, artificial ice and temperature blanks are returned to the client. Packing which is deemed re-usable may be returned. Packing which resembles trash or is ruined during unpacking is disposed as trash. Drain any water from the container before sealing it closed. Due to partially frozen artificial ice, client containers may not be perfectly dry when returned. Complete a return-mailing label. Secure it with cellophane tape and seal the container.

11.8. Disposal of ice

11.8.1. When ice is present, it is often enclosed in plastic bags. A basin used for dumping ice is located in sample administration. Open the bags and dump ice into the basin. Water should not be left running in the basin as the basin drains into a closed system. When excessive amounts of ice are received, collect the ice in an ice chest and dump it over the storm drains

outside the building. **This is permissible only if the ice and coolers are uncontaminated and the amounts disposed in this way are recorded. Additionally, ice used to ship any soil samples may not be disposed down the storm drain. It may only be disposed of down the basin in sample administration.**

11.9. Lot generation

11.9.1. Lots are created by using quotes that are provided by the project manager. Determine the appropriate quote number by using the “Quote Search” program, via either the client name or project manager. If the quote cannot be determined, send an email to the project manager by using the Review Login Data of the Sample Receipt Logbook program. If the quote information is not available and must be set-up from scratch, determine the name and location of client. This information can be found on the COC, or shipping labels and forward this information to the project manager so they can create a quote.

11.10. Sample login

11.10.1. Refer to the QuantIMS E-Z Login sheet.

11.10.2. Record lot number in SRL on the line corresponding to the shipment's arrival. Complete Lot Review Checklist # 1 (see appendix 7). File an HTV, if necessary, by entering " Anomaly" and the lot number at your prompt. Answer the queries, and be certain to mail the HTV to the department supervisor and project manager involved. The HTV is filed by sample administration when a holding time is expired upon receipt. If the holding times have not completely expired for a project, the department handling the analysis in question files the HTV. Place the project manager folder in the project manager's tray and the internal tracking folder in the checkout boxes (both located in sample administration).

11.11. Project manager folder assembly

11.11.1. Place in an appropriately colored folder (see section 5.6.1.):

11.11.1.1. Lot Receipt Checklist # 1 and bottle inventory; (yellow page)

11.11.1.2. Lot Review Checklist # 1 (green page)

11.11.1.3. Original COC

11.11.1.4. Air bill and secondary documentation

11.11.1.5. Sample confirmation report, (QuantIMS) (white page)

11.11.2. In-house COC folder assembly

11.11.2.1. Align folder (any color) with the tab on right-hand side. On the right-hand side of the folder, staple the in-house COC form (see appendix 6). On the left-hand side, staple a copy of the inventory sheet. If the entire bottle inventory for any sample is not complete on the sample confirmation report, include a copy of the bottle inventory (reverse side of LRC). If an MSDS is provided in shipment, place a copy on the right-hand side of the folder.

11.12. Refrigerator and freezer temperatures

11.12.1. Refrigerator and freezer temperatures will be monitored and recorded once daily Monday through Saturday. Any temperature below 2°C or above 6°C for the refrigerators and above -10°C for the freezer will need corrective action. Refer to SAC-QA-0005, Temperature Monitoring and Corrective Action for Refrigerators and Freezers. Temperatures will be recorded on the appropriate charts. Temperature charts will then be stored in the temperature logbook. All charts for a particular refrigeration unit will be stored together in chronological order.

11.13. Internal sample tracking

11.13.1. Analyst selects sample checkout folder for the lot of interest and ascertains storage location. Analyst removes appropriate containers from storage unit and organizes them by lot and sample number. Analyst completes checkout portion of internal COC. For a legal chain of custody, a sample custodian must verify the record and container labels and initial under the witness field on the internal COC. For non-legal COCs, “NA” may be entered in the witness field.

11.13.2. If a sample is completely used up in the extraction laboratory, then the disposition of the container must be documented. The code DIT (destroyed in testing) may be used. All empty containers not returned to sample administration must be recorded on the Internal COC. If the containers are not to be returned and will enter the waste stream through the extraction lab, the analyst will also enter this information during checkout.

11.13.3. Analyst files the checkout folder before leaving the room. At return, the analyst completes the check-in portion of the Internal COC. Analyst returns samples to their storage location. If subsampling or aliquoting is

performed, whether outside the area or not, containers must be checked out by the analyst. The original containers' whereabouts and those of any other containers generated must be documented. Transfer of volatile containers from VOA to RD and RF do not require verification.

11.14. Sending out subcontracted work

11.14.1. In the event samples require being subcontracted out to another lab, the samples will be processed in the very same manner as all other samples. Samples should be received and processed as described in sections 5.1 to 5.13 of this SOP. The project manager should notify the sample receiving staff as to all samples they require to be shipped out.

11.14.2. Using QuantIMS, generate a new STL Sacramento chain of custody for the subcontracted samples. The destination for the samples should be entered on the COC. Contact the project manager for assistance if any difficulties are encountered.

11.14.3. Log samples to be subcontracted out onto a sample receiving shipping log. In addition, use the in house COC (see appendix 6) to check out the samples from sample control. In the sample check-in section, document that the sample was subcontracted and its' destination.

11.14.4. Samples should be packaged in a manner in accordance with STL Sacramento Receiving Acceptance Policy. Samples are packaged in a plastic bag to insure labels do not get wet. Additional packing may be used to insure samples have adequate protection from breakage. Samples are subsequently packaged in a bag containing copious amounts of wet ice. There should be sufficient ice to maintain the samples within the temperature range of 2°C to 6°C throughout transit. The ice packed samples are stored in the appropriate sized insulated container.

11.14.5. Relinquish custody of the samples by signing the appropriate space on the STL Sacramento COC. A copy should be included with the samples. Insure that it is packed in the shipping container and that it is protected from moisture from ice and or samples (in the event any containers become compromised). The original should be filed in the project manager purple colored folder.

11.14.6. The packed container is then sealed with a generous amount of shipping tape to ensure the contents remain secured. Samples are now ready for shipment. Ensure they are labeled with the appropriate shipping labels and delivered to the courier.

11.15. Client deliveries (" over the counter")

11.15.1. Samples received “over the counter” are samples hand delivered by the client, sampler or courier directly employed by the client's company. The pivotal question in such deliveries is whether the person possessing the shipment is in custodial possession of the samples or merely transporting the shipment. If in custodial possession, the deliverer will need to relinquish custody to you before departing and will probably retain a copy of the documentation. To determine the matter, simply ask the deliverer if they had signed any of the sample documents.

11.15.2. If the client, sampler or courier does not wish to remain while the samples are unpacked and verified, sign the COC in the " Received By" section. Include a statement that only the shipping container was received (example: One cooler received from Company X in good condition. MMDDYY/ Initials).

11.15.3. Mention any discrepancies and allow corrections to be made by the client, sampler or courier. Also ask for any special instructions or important aspects of the project (i.e. rush turn-around times, impending hold-time violations, sample matrix specifics, etc.). Solicit the client’s needs such as shipping containers, bottle orders, to speak with a project manager or any other requests. After the client's departure, complete any aspects of sections 5.1 through 5.15 left unfinished. Prioritize the new project within the existing workload and proceed with the highest priority.

11.16. After hours sample receipt instructions for non-sample administrative personnel (see Appendix 12)

12. CALCULATIONS

12.1. Not applicable

13. METHOD PERFORMANCE

13.1. Not applicable

14. POLLUTION PREVENTION

14.1 All waste will be disposed of in accordance with Federal, State and Local regulations. Where reasonably feasible, technological changes have been implemented to minimize the potential for pollution of the environment. Employees will abide by this method and the policies in section 13 of the Corporate Safety Manual for “Waste Management and Pollution Prevention.”

14.2 All ice, or melted ice, that has been used to store or ship any soil samples, or in any

container with soil samples, must be allowed to melt through a 100 mesh screen, in order to comply with our USDA soil permit.

14.3 Ice chests that have been used to ship soil samples must be decontaminated with isopropyl alcohol during the cleaning process before being re-used.

15. WASTE STREAMS PRODUCED BY THE METHOD

15.1 The following waste streams are produced when this SOP is followed:

- Uncontaminated packing materials such as vermiculite, bubble wrap, foam inserts, plastic bags, paperwork, etc. These are collected in the uncontaminated lab trash cans, and are disposed of to the dumpster at the end of the day.

- Contaminated solid packing materials, including broken glass, caused by the breakage of sample containers during shipment. Dump the solid waste into a contaminated lab trash bucket. When the bucket is full, tie the plastic bag liner shut and put the lab trash into the steel collection drum in the H3 closet. When the drum is full or after no more than 75 days, move it to the waste collection area for shipment.

- Contaminated melted ice and aqueous samples of unknown hazards, spilled when their sample container breaks during shipment. These materials are collected and disposed of in accordance with instructions from the Hazardous Waste Specialist, depending on the type of sample that was spilled.

- Contaminated melted ice and solid or soil samples of unknown hazards, spilled when their sample container breaks during shipment. These materials are collected and disposed of in accordance with instructions from the Hazardous Waste Specialist, depending on the type of sample that was spilled.

16. REFERENCES

16.1. Manual for the Certification of Laboratories Analyzing Drinking Water, Fifth edition, January 2005, Appendix A.

17. MISCELLANEOUS (TABLES, APPENDICES, ETC...)

17.1. Revision from previous version

17.1.1. Revised to include legal chain of custody

17.1.2. Reformatted.

17.2. Appendix 1 - STL Sacramento Sample Receiving Acceptance Policy

17.3. Appendix 2 - Sample Receipt Logbook

17.4. Appendix 3 - Lot Receipt Checklist

17.5. Appendix 4 – Short Hold Test Notification

17.6. Appendix 5 – Project Receipt Checklist

17.7. Appendix 6 – In House Chain of Custody

17.8. Appendix 7 – Lot Review Checklist # 1

17.9. Appendix 8 – Lot Review Checklist # 2

17.10. Appendix 9 – Flow chart

17.11. Appendix 10 – Chemical Warfare Degradates – Potential Hazards in Sample Receipt

17.12. Appendix 11 – Handling of Blood or Other Potential Infectious Materials

APPENDIX 1

STL SACRAMENTO
SAMPLE RECEIVING ACCEPTANCE POLICY

NELAC and STL Sacramento have specific requirements under which all samples will be received by the laboratory for analysis. STL Sacramento will review your sample shipment against those requirements as listed below, and will communicate any discrepancies to you. Your project manager will assist you in the appropriate resolution of any issues related to sample receipt. Please contact your project manager with any questions.

STL Sacramento requirements are as follows:

- ✓ Proper, full and complete documentation, which includes sample identification, the location, date and time of collection, the collector's name, the preservation type, the sample matrix type, the requested testing method, and any special remarks concerning the samples, shall be provided.
- ✓ Samples must be accompanied by written disclosure of the known or suspected presence of any hazardous substances, as defined by applicable federal or state law.
- ✓ Each sample shall be collected in the appropriate sample container and labeled with unique, durable and indelible identification.
- ✓ Drinking waters samples for Method 1613B that may have residual chlorine must be checked and treated in the field, or collected in sodium thiosulfate preserved containers.
- ✓ The samples shall arrive at the laboratory with adequate remaining holding time for the analyses requested.
- ✓ Sufficient sample volume must be available to perform the requested analyses.
- ✓ Received samples must not exhibit obvious signs of damage, contamination or inadequate preservation.
- ✓ For samples undergoing chemical warfare degradate analysis, the sample must be screened for agent prior to shipment in accordance with appendix 10 of our Sample Receipt Procedure (SAC-QA-0003).
- ✓ Samples containing mammalian tissue will not be accepted without prior coordination with a project manager. Additional conditions for receipt and handling of tissue are outlined in appendix 11 of our Sample Receipt Procedure (SAC-QA-0003).

The laboratory will notify the client/Project Manager upon sample receipt if the samples fail to meet any of the above requirements.

When completing the chain of custody form, please do not forget to sign your name in the " relinquished by" box.

APPENDIX 2

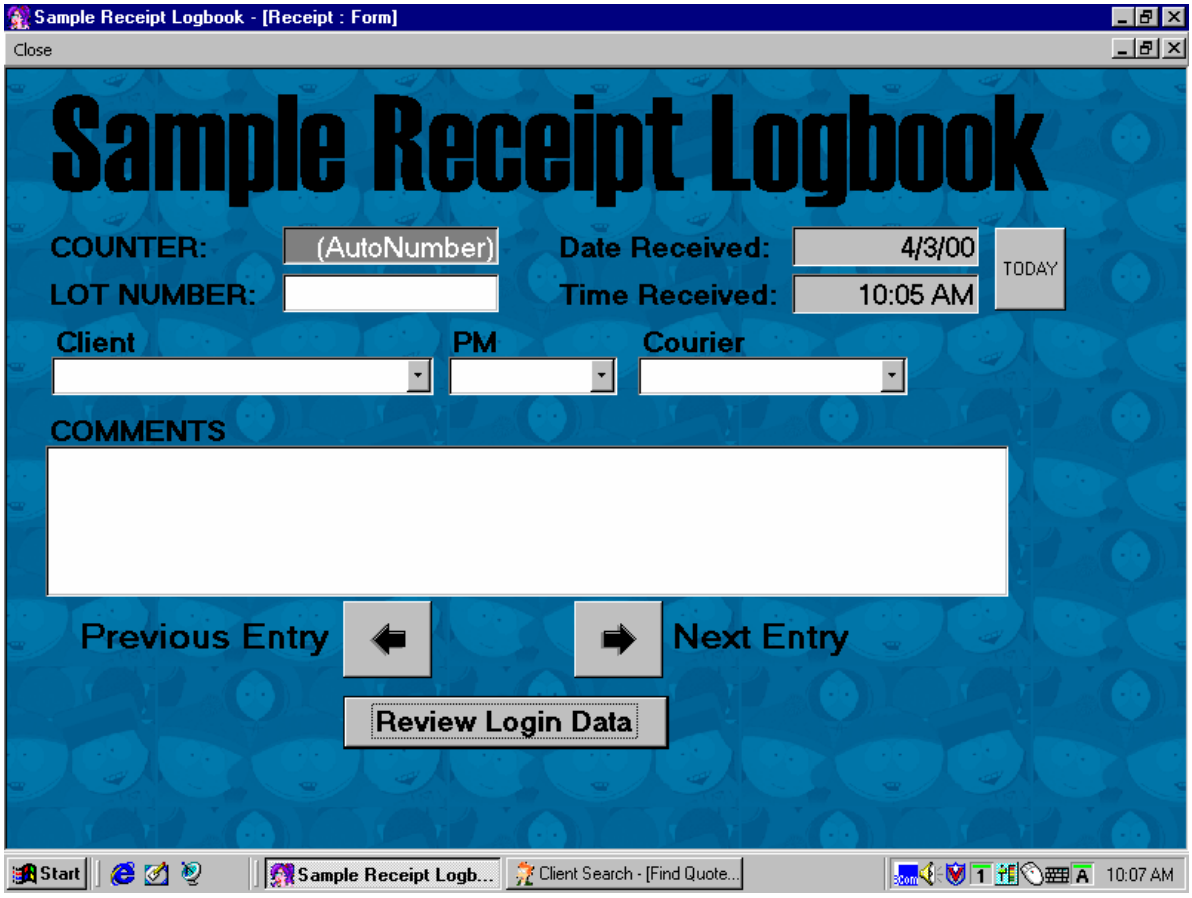
Sample Receipt Logbook - [Receipt : Form]
Close
Sample Receipt Logbook
COUNTER:
(AutoNumber)
Date Received:
4/3/00
TODAY
LOT NUMBER:
Time Received:
10:05 AM
Client
PM
Courier
COMMENTS
Previous Entry
Next Entry
Review Login Data
Start
Sample Receipt Logb...
Client Search - [Find Quote...
10:07 AM

APPENDIX 3

SEVERN TRENT STL

LOT RECEIPT CHECKLIST
STL Sacramento

CLIENT _____ PM_____ LOG # _____

LOT# (QUANTIMS ID) _____ QUOTE#_____ LOCATION_____

	Initials	Date
DATE RECEIVED _____ TIME RECEIVED _____	_____	_____
DELIVERED BY ☐ FEDEX ☐ CA OVERNIGHT ☐ CLIENT ☐ AIRBORNE ☐ GOLDENSTATE ☐ DHL ☐ UPS ☐ BAX GLOBAL ☐ GO-GETTERS ☐ STL COURIER ☐ COURIERS ON DEMAND ☐ OTHER	_____	_____
CUSTODY SEAL STATUS ☐ INTACT ☐ BROKEN ☐ N/A	_____	_____
CUSTODY SEAL #(S) _____		
SHIPPPING CONTAINER(S) ☐ STL ☐ CLIENT ☐ N/A	_____	_____
TEMPERTURE RECORD (IN °C) IR 1☐ 3 ☐ ☐ OTHER_____	_____	_____
COC #(S) _____	_____	_____
TEMPERATURE BLANK Observed:_____ Corrected:_____		
SAMPLE TEMPERATURE Observed:_____ _____ _____ Average:_____ Corrected Average:_____		
COLLECTOR'S NAME: ☐ Verified from COC ☐ Not on COC	_____	_____
pH MEASURED ☐ YES ☐ ANOMALY ☐ N/A	_____	_____
LABELED BY.....	_____	_____
LABELS CHECKED BY.....	_____	_____
PEER REVIEW _____ ☐ NA		
SHORT HOLD TEST NOTIFICATION SAMPLE RECEIVING	_____	_____
WETCHEM ☐ N/A	_____	_____
VOA-ENCORES ☐ N/A	_____	_____
☐ METALS NOTIFIED OF FILTER/PRESERVE VIA VERBAL & EMAIL ☐ N/A	_____	_____
☐ COMPLETE SHIPMENT RECEIVED IN GOOD CONDITION WITH APPROPRIATE TEMPERATURES, CONTAINERS, PRESERVATIVES ☐ N/A	_____	_____
☐ Clouseau ☐ TEMPERATURE EXCEEDED (2 °C – 6 °C)*1 ☐ N/A	_____	_____
☐ WET ICE ☐ BLUE ICE ☐ GEL PACK ☐ NO COOLING AGENTS USED ☐ PM NOTIFIED		

Notes:_____

*1 Acceptable temperature range for State of Wisconsin samples is ≤ 4°C.
LEAVE NO SPACES BLANK. USE "N/A" IF NOT APPLICABLE. INITIAL AND DATE ALL "N/A" ENTRIES.

QA-185 5/05 EM, Page 1

APPENDIX 4

STL Sacramento
SHORT HOLDING TEST NOTIFICATION

SEVERN TRENT STL

CLIENT _____ ☐ SHT ANALYSIS
LOT ID _____ ☐ PENDING HTV (ROUTINE TESTS)
DATE & TIME RECEIVED BY SAMPLE CONTROL _____ ☐ RUSH (24 - 48 - 72 HR TAT)
DATE & TIME RECEIVED IN GEN CHEM _____ ☐ SEE ATTACHED

CHEMIST NOTIFIED _____ QAS # _____

GENERAL ANALYSIS	SAMPLE #	ASSIGNED CHEMIST
☐ pH ☐ Alkalinity	_____	_____
☐ $Cr6^+$ ☐ EC	_____ _____	_____
☐ Turbidity ☐ Color	_____ _____	_____
☐ SS ☐ SO_3	_____ _____	_____
☐ pH-Soils	_____ _____	_____
Lachat		
☐ NO_2+NO_3	_____	_____
☐ NO_2	_____	_____
☐ NO_3	_____	_____
Method 365.3		
☐ OPO_4	_____	_____
Method 300.0		
☐ NO_3 ☐ NO_2 ☐ OPO_4	_____	_____
☐ Br ☐ Cl ☐ SO_4 ☐ F	_____	_____
Metals		
☐ Dissolved Metals, Filter & Pres	_____	_____
☐ OTHER _____	_____	_____
_____	_____	_____
_____	_____	_____

Holding time already violated? ☐ Yes ☐ No

HTV filed? ☐ Yes ☐ No

☐ MS/MSD required on sample # ____ ☐ MS/DU required on sample # ___

Comments: _____

QA-356 ERS 7/13/05

APPENDIX 5 (BOTTLE LOT INVENTORY)

SEVERN TRENT STL

Bottle Lot Inventory

Lot ID:_____

	1	2	3	4	5	6	7	8	9	10	11	12	13	14	15	16	17	18	19	20
VOA*																				
VOAh*																				
AGB																				
AGBs																				
250AGB																				
250AGBs																				
250AGBn																				
500AGB																				
____AGJ																				
500AGJ																				
250AGJ																				
125AGJ																				
____CGJ																				
500CGJ																				
250CGJ																				
125CGJ																				
PJ																				
PJn																				
500PJ																				
500PJn																				
500PJna																				
500PJzn/na																				
250PJ																				
250PJn																				
250PJna																				
250PJzn/na																				
Acetate Tube																				
_____"CT																				
Encore																				
Folder/filter																				
PUF																				
Petri/Filter																				
XAD Trap																				
Ziploc																				
	1	2	3	4	5	6	7	8	9	10	11	12	13	14	15	16	17	18	19	20

h = hydrochloric acid **s** = sulfuric acid **na** = sodium hydroxide **n** = nitric acid **zn** = zinc acetate

Number of VOAs with air bubbles present / total number of VOA's

QA-185 5/05 EM
Page 3

APPENDIX 6

SEVERN TRENT STL

IN-HOUSE CHAIN OF CUSTODY

STL Sacramento

LOT # _____

LOCATION _____

SAMPLE CHECK OUT							SAMPLE CHECK IN						
SAMPLE (S)	CONTAINER	INIT	TEST	DATE	TIME	W	SAMPLE(S)	CONTAINER	INIT	DATE	TIME	Return Location	COMMENTS

1. Sample # (ex: 1,2,4-10)
2. Container (ex: AGB)
3. Init: your initials
4. Test: analysis sample is for
5. Date: date taken/returned
6. Time: time taken/returned
7. W: peer witness of checkout ("NA" unless legal COC)
8. Rtrn Loc: location samples returned to
9. Comments: (ie: empty, subsampled)

QA-188 DAW 10/16/06

PAGE _____

APPENDIX 7

LOT REVIEW CHECKLIST #1

Lot # _____

SEVERN TRENT SERVICES

SHIPMENT RECEIPT:

____ COC/Letter of Transmittal signed and dated with time of receipt
____ Condition of samples noted on COC
____ Lot Receipt Checklist completed
____ COC generated for undocumented samples (from label information)

LOT FOLDER:

____ Means of delivery present on yellow sheet
____ Correct receipt date and time recorded
____ Sample ID(s) and collection date(s)/time(s) match COC or discrepancies noted on COC
____ Lot# labels are correct
____ Lot # entered in Excel spread sheet
____ Log # noted on yellow sheet

NOTIFICATION:

____ Anomaly sent via Clouseau
____ Wetchem notified of Short Holding tests
____ Metals notified of filtering and/or preservation
____ Rush E-Mail notification sent to PM and appropriate department(s)
____ HTV Filed for sample with expired hold times upon receipt (if applicable)
____ Subcontracted Samples

IN-HOUSE COC FOLDER:

____IN-HOUSE COC stapled to right side of folder
____ Bottle checklist stapled to the left side of folder
____ Folder filed

INITIAL/DATE _____

QA-235 EM 8/19/02

APPENDIX 8

SEVERN TRENT SERVICES

LOT REVIEW
CHECKLIST #2
STL Sacramento

LOT # _____ DATE RECEIVED _____

SECTION I

LOG RELEASE

___ Verified Correct Quantims Quote
___ Verified Contact name/Report copy
___ Verified Billing name/address
___ Verified P.O. #
___ Verified Mail to address
___ Verified prices
___ Verified SAC's assigned properly
___ Verified sample Ids and date/time sampled
___ Client specific QC assigned
___ Lot Receipt Checklist complete
___ COC discrepancies resolved and documented
___ Verified TAT or due date
___ Confirmation sent to client
___ QAS assigned
___ Report Production Form completed
___ Log released
___ Verified Short Holding Time Notification

SUBCONTRACTED WORK

___ Confirmation of shipment (chain of custody of samples shipped)
___Expected Due Date entered in Target List system

SECTION I REVIEWED INITIAL/DATE _____

SECTION II

REPORT REVIEW

___ Signature page variables correct
___ Preliminaries documented
___ Table of contents correct
___ Correct TEQ Summary Sheet included
___ Data for all requested analyses
___ QA/QC data in control or anomalized
___ Case Narrative/Anomalies documented
___ EDD generated and completed

INVOICING

___ Additional costs added
___ Revenue Centers correct for additional items

SECTION II REVIEWED INITIAL/DATE _____

QA-235A EM 8/19/02

APPENDIX 9

Flow Diagram

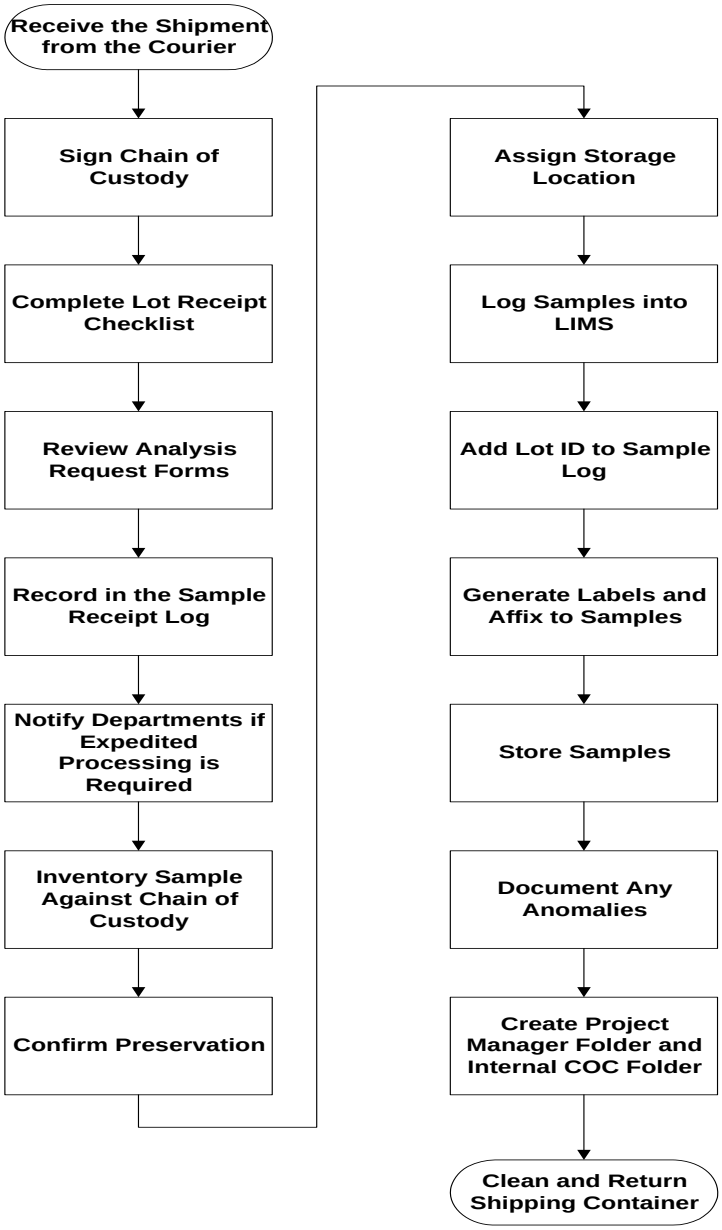

APPENDIX 10

Chemical Warfare Degradates - Potential Hazards in Sample Receipt

Background

STL Sacramento regularly receives samples to be analyzed for degradates of chemical warfare agents. These degradates generally are no more toxic than most of the compounds we deal with every day. The fact that these compounds are degradates of chemical warfare agents does, however, present a different type of potential hazard for us. We have developed policies regarding the handling of such samples. The purpose of this document is to discuss these compounds and the potential hazards involved in handling them.

Please note that STL Sacramento does NOT analyze samples for actual chemical warfare agents such as mustard, lewisite, Sarin, GD, VX, phosgene and tear gas. Parent compounds are analyzed by laboratories that have specialized personnel training, security, and handling procedures.

The toxicity of the by-products of some chemical warfare materials are more than the parent compound. An example of this is VX and EA 2192. Testing protocol for degradates is not necessarily specific for the analyte being screened for and the scientific community has not come to consensus on what "positive" test results actually mean. For this reason, in all cases where positive screening data is received for the parent compounds, Corporate EH&S, the Project Manager, local EH&S staff and senior management must be consulted before deciding to accept and proceed with handling such samples.

Review of Agent Compounds

Chemical warfare agents fall into a wide variety of categories, ranging from relatively mild chemicals such as tear gas to lethal nerve agents such as Sarin. The two types of agents we are most concerned with are **nerve agents** and **blistering agents**. Other lethal agents have been developed and tested for use in chemical warfare; however, these other compounds are either extremely volatile and reactive (and therefore highly unlikely to be present in an environmental sample) or were never produced in significant quantities in the U.S.

Nerve agents

These are members of the organophosphate class of compounds. They are similar to many common household pesticides such as diazinon. The difference is that nerve agents are far more toxic to humans. The first nerve agent, Tabun, was discovered prior to World War I by a German pesticide company during the process of screening new compounds for use as pesticides. Once the toxicity of Tabun was determined, various governments began screening many related compounds. Out of this effort have come five established (non-classified, i.e. public domain) agents. --- **Tabun (or GA), Sarin (or GB), GD, GF, and VX.**

All of these compounds are toxic via inhalation, ingestion, skin contact, or just about any other route of entry into the body.

A **characteristic of these compounds is their volatility**. A more volatile nerve agent will disperse in air more effectively than a less volatile one.

Less volatile agents, on the other hand, will remain around on soil, vegetation, clothing, etc. and will therefore last longer. Out of these various agents, the only two produced in significant quantities in the U.S. are Sarin and VX. **Sarin is the most volatile** of the above agents while VX is the least volatile. Both are extremely toxic - a drop of pure VX barely visible to the naked eye is enough to kill a person through skin contact.

Blistering agents

These were the first of the modern agents developed specifically for military purposes. Unlike nerve agents, blistering agents are different mixtures of one compound, sulfur mustard, with other non-toxic chemicals which affect its dispersion characteristics.

The primary hazard with sulfur mustard involves skin contact. The term "blistering agents" is somewhat of a misnomer - it will kill you if you inhale enough of it, but this is not likely to occur as it is not particularly volatile under normal conditions. Significant quantities of sulfur mustard (a.k.a. HD or HT) have been produced in the U.S.

Chemical Agents in the Environment

It is unlikely (but never impossible) that we at STL Sacramento will receive a sample that contains a dangerous concentration of active agent. We **should not** receive samples from any areas known to be contaminated with active chemical agent (areas with buried drums, old munitions, etc.) because the Army policy for such sites is to destroy the agent onsite.

Additionally, most of the areas in which degradate analysis is required are areas in which agent was used decades ago - all active agent is likely to have degraded. Nonetheless, it is imperative that we know as much as possible regarding the compounds and the samples in order to protect ourselves against any potential hazard.

The behavior of these compounds in the environment has been extensively studied. Most of the information we have is from a study titled **Environmental Chemistry and Fate of Chemical Warfare Agents**. This study was prepared for the Army Corps of Engineers by Southwest Research Institute in 1994.

Sites containing chemical warfare related material or chemical warfare materials are divided into **"stockpile" and "non-stockpile" sites**. Stockpile sites are where the vast majority of CWM's are stored. Non-stockpile sites are where smaller amounts of CWM's are located. Non-stockpile sites may contain: buried CWM, chemical weapon production facilities, binary chemical weapons and miscellaneous CWM.

What is important to realize is that based on the **Survey and Analysis Report** prepared by the US Army Chemical Material Destruction Agency (11/93), there are "potential burials at 82 locations in 33 states, the US Virgin Islands and the District of Columbia.....Some of the 82 locations have multiple burial sites." Given this wide span of impacted areas, for every shipment received by STL Sacramento for CWM analysis, adherence to procedures listed in this document and the Corporate Safety Manual is strictly required.

Nerve Agents

Both of the compounds we are concerned with (Sarin and VX) undergo **hydrolysis in the presence of water**. This hydrolysis proceeds at different rates, depending upon the compound. At worst (cool temperature, normal pH, no dissolved ions, no microbes), either of these compounds getting into water would be degraded to extremely low levels ($< 1 \times 10^6$ of the original concentration) within a couple of years. It is more likely that this level of degradation would occur much more quickly.

Degradation in soil is a far more complex issue. The rate of hydrolysis will depend upon a variety of factors, including soil moisture, pH, mineral content, microbes, temperature, etc. Most available studies show that these compounds last no more than a few days in the tested soil types.

Sulfur Mustard

In some ways, sulfur mustard behaves in a fashion similar to the nerve agents - i.e. it hydrolyzes rapidly in the presence of water. There is, however, an important difference. Under the right conditions, **the hydrolysis products of mustard can polymerize and form bubbles containing active mustard**. The mustard inside of these bubbles is shielded from further hydrolysis by the hydrolysis products. This has turned out to be a problem in areas where large amounts of mustard were dumped at sea. Fishermen in such areas have been injured when pulling up nets contaminated with blobs of active mustard. An indication that this may have occurred would be a biphasic sample. This situation can also occur in soil.

Potential Hazards to STL Sacramento Personnel

Following steps listed in this appendix and other safety policies will help reduce hazards to the greatest degree possible. However, such policies are no substitute for educated, observant personnel.

As always, you must think about what you are doing when you handle these materials. No policy can account for every potential situation. Staff are expected to follow all sample handling policies identified in the Corporate Safety Manual and steps following sample receipt listed in this appendix.

Soil and water samples will be screened for agent prior to their shipment to STL Sacramento, unless an exception has been granted by the Corporate Director of EH&S. Data should be reviewed at the project management and EH&S staff level to ensure samples are “safe” for handling. If the screening status is unknown (i.e. no data is available), project management personnel should be consulted. Samples will **not** be handled. If staff are unavailable, the cooler will be left in cold storage until the situation is resolved. The expiration of analytical holding times will not be considered as sufficient reason to handle/process CWM samples prior to receipt of screening data.

Positive “hits” on samples containing by-products of agents (like EA 2192) must also be reviewed at the project management and EH&S staff level to ensure samples are “safe” for staff to handle.

When in doubt, seek assistance from project management, operations manager, or EH&S staff. Corporate EH&S staff are also a resource which must be consulted before deciding to proceed with any “questionable” samples received.

Sample Receipt Procedures

⇒ Follow SAC-QA-003

⇒ Review screening data BEFORE opening the cooler if soil samples.

Note: Double gloves are required when handling chemical warfare degradate samples.

⇒ Following established safety policies, open the cooler, remove any paperwork, and check the interior condition.

⇒ All coolers from CWM sites will be initially opened in a fume hood. Once you have determined that there are no broken or leaking sample containers, the cooler may be moved to a bench top for further processing.

⇒ If a sample contains a broken or leaking sample, isolate the cooler in the hood and IMMEDIATELY contact the project manager, operation manager and/or EH&S staff.

⇒ Any sample which appears to be biphasic in appearance must be isolated. Immediate notification to project management, operation manager and/or EH&S staff is required.

⇒ When in doubt, get help regarding sample receipt. Worker health and safety is **paramount** to sample analysis.

⇒ Regardless of screening data, any cooler containing samples for degradate analysis (or any other samples from an area suspected of potential agent contamination) **should be inspected carefully** upon receipt. Anyone inspecting the samples, logging them in, or handling them for any other reason should observe all of STL Sacramento's regular safety procedures.

In addition, **two pairs of gloves** will be worn in order to minimize any potential for skin contact with toxic compounds. Please note that **skin contact appears to be the most likely potential route of exposure.** This is based on the fact that nerve agents are likely to have degraded leaving sulfur mustard as the most likely potential contaminant and due to the likelihood that the samples will be cold. The temperature in the cooler is important from the standpoint of safety as well as sample integrity - cold samples mean a significantly lower potential for any kind of toxic vapor formation. Coolers containing broken jars or bottles should be placed in a hood immediately and left there until the client has been contacted. EH&S staff and/or the project managers will give instructions regarding return to client or disposal based on the screening data.

In conclusion, it must be emphasized that these samples must be handled with the appropriate level of care. Observant, educated personnel are our best defense against exposure to any kind of toxic materials found in our samples.

APPENDIX 11
Handling of Blood or Other Potentially Infectious Material

Background

STL Sacramento has, upon occasion, received a variety of biological samples for various environmental analyses. Biological samples present a very different type of hazard than "typical" environmental samples. Depending on the type of sample delivered for analysis, and the types of analyses requested, a variety of additional precautions and protective measures may be required when receiving, processing and storing these samples.

Types of Biohazard Samples

There are many types of biohazard samples. Not all biological samples are necessarily biohazard samples. Some of the types of biohazard samples that have been received at STL Sacramento in the past include:

Human blood
Human tissue
Human breast milk
Rodent or other mammalian tissue
Human waste products, usually samples from municipal sewage treatment plants

While fish, crawfish, clams, plant tissue, grasses and such are all biological samples, they are not generally considered to be a biohazard threat.

Specific Hazards Associated with Biohazard Samples

The unique threat associated with biohazard samples is infectious diseases. Typically, these are Human Immuno Virus (HIV) and Hepatitis B. Other potential hazards include (but are not limited to) rabies, bubonic plague and the Hanta virus. Some of these hazards we are prepared to work with effectively, and others we are not.

Samples potentially infected with rabies, bubonic plague, or the Hanta virus require engineering controls that are not in place at STL Sacramento. Accordingly, we will not accept samples potentially infected by these diseases. These samples include whole rodents or other mammals, mammal parts, or homogenized mammal tissue. Mammal tissue samples that are known NOT to be infected with these diseases may be accepted for analysis under certain conditions. These samples must be homogenized and the sample tissue must be "fixed" in a 4% or higher formalin solution. The outside of the sample container must have been disinfected with a Centers for Disease Control (CDC) approved disinfectant after the sample was placed in the container but before it was shipped to us. Examples of this disinfectant solution are a 10% bleach solution or a 5% Lysol solution.

General Procedures

Universal precautions: All human and mammal blood, fluid and tissue samples are assumed to be infectious. All staff members will wear two pair of protective gloves when handling or working with biohazard samples. Safety glasses and a face shield are required. Fume hood sashes will be closed as far as possible, consistent with safe work practices. Lab coats will always be worn, buttoned up. Lab coats worn when handling biohazard samples will not be worn outside of the laboratory. When work is finished with biohazard samples, lab coats worn during the process will be sent out for cleaning. If they have been splashed or contaminated with any infectious sample, they will be disposed of as biohazardous waste. Workers will exercise caution to avoid injury with tools possibly infected from biohazard work, such as glass pipettes, metal spatulas, broken glass, etc. All waste material will be disposed of in appropriately marked containers as biohazardous waste. Workers with open wounds, sores or broken skin shall not handle biohazardous samples. Pregnant workers shall be especially familiar with and adhere to precautions to minimize the risk of transmission. Employees involved with handling human blood or tissue samples will be offered the opportunity to receive the Hepatitis

B vaccination series. This may be accepted, declined, or accepted at a later date.
Engineering and administrative controls: Signs will be posted on all doorways leading into areas where biohazardous samples are being handled. These signs will be clearly visible and will identify that biohazard work is in progress. When these signs are posted, personnel not involved in the work will stay out of the work area. If this is impractical, the biohazard work will be performed an isolated area that is clearly marked. No one may enter this area without permission from the sample administration technician or chemist doing the work. Personal protective equipment will be removed immediately upon leaving the area and disposed of or cleaned properly. Eating, drinking, use of tobacco products, gum, hard candy, applying cosmetics or lip balm and use of contact lenses are all prohibited in any areas where biohazard samples are being handled. Employees working with biohazard samples will thoroughly wash their hands with disinfectant soap when finished work and before leaving the lab. Work areas will be thoroughly cleaned and disinfected when biohazard work is complete. This includes properly disposing of bench paper and used equipment such as pipets, disinfecting all reusable equipment such as glassware, metal spatulas, and disinfecting work surfaces. Broken glassware that is potentially infected must not be picked up directly with the hands. Any trash cans or containers that may have been contaminated will inspected, cleaned and disinfected with an appropriate disinfecting solution.

Sample Receipt Procedures

Follow SAC-QA-0003
If advance notification is provided of incoming biohazard samples, contact EH&S, review this appendix and ensure that you are familiar with the safety procedures involved. Ensure that you have a clear workspace, that you know in advance where the samples will be stored, and that there is space available to store them.
Note: All potential biohazard samples must be kept in locked storage, either WR1 or WF1.
Note: Double gloves and a face shield are required when handling biohazard samples.

Biohazard samples shall be opened in a fume hood.
Following established procedures, open the cooler, remove any paperwork and check the interior condition.
If a shipping container has a broken or leaking sample, isolate the cooler in a fume hood and IMMEDIATELY contact the project manager and EH&S staff.
Note any comments or warnings on sample containers (including shipment paperwork) regarding specific threats or hazards.
When in doubt, get help regarding sample receipt. Your health and safety is of paramount importance.

The most likely methods of transmission of disease when handling biohazard samples are splashing infected blood or tissue onto an open cut or sore or into your eyes, mucous membranes or mouth. The likelihood of transmission via these routes can be almost completely eliminated by following proper procedures.

Exercise care when handling samples so that they do not drop or get knocked over.
Wear two pair of protective gloves – latex, vinyl or nitrile.
Don’t work around biohazard samples with open cuts or sores.
Wear your safety glasses with a face shield.
Ensure that all skin is covered, such as your wrists and forearms
Wear your lab coat, properly fastened.

APPENDIX 12

After Hours Sample Receipt Procedures for Non-Sample Administrative Personnel

Normal business hours for receiving samples are Monday through Friday, 8:00 am to 6:00 pm, and Saturday, 8:00 am to 12:00 pm. In the event that samples are delivered outside of normal operating hours, and only non-Sample Administrative personnel are available to accept the delivery, the following procedures should be followed:

• If samples are delivered directly by a client, have him/her relinquish the COC, sign your name on the "Received By" line, note the time received, and make a copy of the signed COC for the client. Keep the original COC with the samples.

•If samples are delivered by a courier, and the COC is taped inside a cooler, note who delivered the samples and what time they arrived.

•Start a Lot Receipt Checklist (LRC), form QA-185, and complete the date/time received section and the custody seal section. Open the cooler/container and measure the temperature of the samples and/or temperature blank (if easily accessible) using the IR thermometer. Do not take the temperature of ice or packing material. Record the temperature(s) in the appropriate fields on the LRC. For clarity on which sections to complete, see the highlighted sections on the sample LRC posted next to these instructions.

•If samples are not contained in a cooler, document what kind of cooling agents were used, if any. Leave a note with this information with the COC.

•Place cooler/samples on a cart and store in the walk-in refrigerator.

•Send an email to "SACSC" to notify them that samples were received outside of normal hours, and include any pertinent information (i.e. when received, who delivered the samples, where they are located, sample receipt temperatures, etc.) to assist them in processing the samples when they return.

APPENDIX C

EXAMPLE CHAIN-OF-CUSTODY FORM AND SEAL

U.S. ENVIRONMENTAL PROTECTION AGENCY
REGION V
OFFICIAL SEAL
№ 180297

Superfund ERB
START, Okemos, MI
EPA Contract Number: EP-S5-06-04

CHAIN OF CUSTODY RECORD
Site #: B5KQ
Contact Name: Tonya Balla
Contact Phone: 847-918-4094

No: B5KQ-08/02/07-0001
DateShipped: 8/2/2007
Lab: Cornerstone Laboratories LLC
Lab Phone: 901-398-4001

Lab #	Sample #	Location	Analyses	Matrix	Collected	Numb Cont	Container	Preservative	MS/MSD
	NE-1044-001-080207	Front yard	Herbicide	Soil	8/2/2007	1	Jar	None	
	NE-1044-001-080207	Front yard	Pesticides, organophosphourous	Soil	8/2/2007	1	Jar	None	
	NE-1044-001-080207	Front yard	Tebuthiuron	Soil	8/2/2007	1	Jar	None	
	NE-1044-002-080207	Front yard	Tebuthiuron	Soil	8/2/2007	1	Jar	None	
	NE-1044-002-080207	Front yard	Herbicide	Soil	8/2/2007	1	Jar	None	
	NE-1044-002-080207	Front yard	Pesticides, organophosphourous	Soil	8/2/2007	1	Jar	None	
	NE-1044-004-080207	Side Yard	Tebuthiuron	Soil	8/2/2007	1	Jar	None	
	NE-1044-004-080207	Side Yard	Herbicide	Soil	8/2/2007	1	Jar	None	
	NE-1044-004-080207	Side Yard	Pesticides, organophosphourous	Soil	8/2/2007	1	Jar	None	
	NE-1044-005-080207	Side yard	Tebuthiuron	Soil	8/2/2007	1	Jar	None	
	NE-1044-005-080207	Side yard	Herbicide	Soil	8/2/2007	1	Jar	None	

Special Instructions: Please Send electronic copy to Dan Capone at Dan.Capone@westonsolutions.com and send a hard copy to Tonya Balla at 750 E. Bunker Ct., Suite 500, Vernon Hills, MI 60061 847-918-4094. Samples are for 24 hour TAT

SAMPLES TRANSFERRED FROM
CHAIN OF CUSTODY #

Items/Reason	Relinquished by	Date	Received by	Date	Time		Items/Reason	Relinquished By	Date	Received by	Date	Time

Superfund ERB
START, Okemos, MI
EPA Contract Number: EP-S5-06-04

CHAIN OF CUSTODY RECORD
Site #: B5KQ
Contact Name: Tonya Balla
Contact Phone: 847-918-4094

No: B5KQ-08/02/07-0001
DateShipped: 8/2/2007
Lab: Cornerstone Laboratories LLC
Lab Phone: 901-398-4001

Lab #	Sample #	Location	Analyses	Matrix	Collected	Numb Cont	Container	Preservative	MS/MSD
	NE-1044-005-080207	Side yard	Pesticides, organophosphourous	Soil	8/2/2007	1	Jar	None	
	NE-1044-005-080207	Side yard	Volatiles - TCLP	Soil	8/2/2007	1	Jar	None	
	NE-1044-005-080207	Side yard	Semivolatiles - TCLP	Soil	8/2/2007	1	Jar	None	
	NE-1044-005-080207	Side yard	Metals	Soil	8/2/2007	1	Jar	None	
	NE-1044-005-080207	Side yard	RCN + RS	Soil	8/2/2007	1	Jar	None	
	W-23330-003-080207	Front yard	Tebuthiuron	Soil	8/2/2007	1	Jar	None	
	W-23330-003-080207	Front yard	Herbicide	Soil	8/2/2007	1	Jar	None	
	W-23330-003-080207	Front yard	Pesticides, organophosphourous	Soil	8/2/2007	1	Jar	None	

Special Instructions: Please Send electronic copy to Dan Capone at Dan.Capone@westonsolutions.com and send a hard copy to Tonya Balla at 750 E. Bunker Ct., Suite 500, Vernon Hills, MI 60061 847-918-4094. Samples are for 24 hour TAT

SAMPLES TRANSFERRED FROM
CHAIN OF CUSTODY #

Items/Reason	Relinquished by	Date	Received by	Date	Time	Items/Reason	Relinquished By	Date	Received by	Date	Time

APPENDIX D

PROJECT PERSONNEL RESUMES

LORI A. KOZEL

Qualifications Summary

- More than 7 years of professional experience in environmental consulting
- Knowledgeable in computer programs including: Microsoft Office, AutoCAD, and Adobe Acrobat
- Authorized and experienced user of Niton and Innov-X XRF Spectrum Analyzer.
- Experienced user of Forms II Lite and RCMS 2000.
- Experienced with CLP sampling and validation procedures.
- Trained and experienced in use of many monitoring instruments.
- Conduct emergency response investigations/site characterizations; experience working in levels C and D of protection; develop/implement cleanup strategies/sampling plans; cost monitoring/cost estimating; technical oversight of contractors; develop/ implement site safety plans

Fields of Competence

Conducting field activities for groundwater, soil, and sediment sampling, monitoring well installation, Phase I and Phase II site assessments, remediation oversight, time-critical assessments and removals; Conducting Health and Safety OSHA compliance Audits and administrative/technical assistance for projects. .

Credentials

B.S., Earth Science-Michigan State University (2001)
40 Hour Hazardous Waste Safety and Emergency Response Course, OSHA 29 CFR 1910.120 (e) (3), Metro Occupational Trainers (2001)
Site Health and Safety Coordinator Course, OSHA 29 CFR 1910.120(e) (4), WESTON (2001)
10-Hour OSHA Training Course in Construction Safety and Health, WESTON (2001)
Radiation Safety Course, WESTON (2001)
Niton XRF Spectrum Analyzer Certified, NITON Corp. (2001)
8-Hour OSHA Refresher Course, WESTON (2008)
Certified in First Aid, CPR, and AED, American Red Cross (2008)
Bloodborne Pathogens Training, WESTON (2008)
Dangerous Goods Shipping and Transportation Training, WESTON (2007)
Incident Command System (ICS) 100 and ICS 200 Training. (2006)

Employment History

2001-Present WESTON

Key Projects

Superfund Technical Assistance Response Team Member, Detroit, MI USEPA-START, Project Leader. Provides emergency response assistance to USEPA when on call. Response time to the incident is within one hour for incidents located in the city of Detroit and two hours for incidents located outside the City.

Key Projects (Continued)

Commodity Metals Site and Medbury Neighborhood Site Time-Critical Removal Action, Detroit/Hamtramck MI, U.S. Environmental Protection Agency, Emergency Response Branch, Project Leader. Served as project leader for time-critical assessment and removal of lead contaminated soil from over 100 residential properties. Provided on site support to U.S. EPA On-Scene Coordinator.

Downriver Soil Assessment Project, Ecorse and River Rouge, MI, MDEQ, Project Scientist. Conducted initial data investigation of four possible sources by reviewing US EPA Toxic Release Inventorty, MDEQ Air Quality Data, and and previous environmental reports. Lead sample team by collecting 205 surface soil samples from city owned properties and using GPS to log each sample location. Authored final report with findings.

Michigan Pollution Incident Prevention Plan (PIPP) and Stormwater Pollution Prevention Plan (SWPPP) Review, Battle Creek, MI, Confidential Client, Project Scientist. Reviewed the existing plan for compliance with the Part 5 Michigan standards for volume/storage/spill prevention of PIPP materials on-site. Conducted a site walk-through to observe all changes in the plant operations. Reviewed the current plan against the NPDES permit. Authored new plan based on the new processes the plant currently operates.

Winchester Disposal Landfill, Port Huron, MI, MDEQ, Project Scientist. Scientist in charge of data analysis and report QA/QC. Worked with team to prepare for site work including ordering of equipment, laboratory set-up, and prepared Health and Safety Plan.

Former Statler Hilton Hotel, Time Critcal Removal Action, Detroit, MI USEPA-START, Associate Project Scientist. Conducted oversight for removal and remediation of PCB contaminated equipment and building materials in a former hotel basement. Collected concrete core, air, water, solid, and wipe samples to be analyzed for PCBs, provided written and photo documentation of all site activites, tracked costs in RCMS program, provided real time air monitoring during all activites, and authored final report for client.

Former W.R Grace (NForcer), Time Critcal Removal Action, Dearborn, MI USEPA-START, Project Scientist. Conducted oversight for removal and remediation of Asbestos contaminated soil found outside of the property. Collected samples to be analyzed for asbestos, provided written and photo documentation of all site activites, tracked costs, and authored final report for client.

City of Detroit Water and Sewerage Department (DWSD), Detroit, MI, Assistant Project Scientist. Conducted OSHA compliance audits for DWSD water and wastewater facilities including wastewater treatment plant, pumping stations, water plants and booster stations. Generated detailed reports stating findings and recommendations for proper corrective action. Responsible for updating website with all documents, reports, meeting minutes, safety procedures, etc. provided to DWSD.

Key Projects (Continued)

Detroit Lead Data Investigation, Detroit, MI, MDEQ, Associate Project Scientist. Conducted initial Phase I investigation of 16 possible smelter sites in the City of Detroit by reviewing Sanborn maps, aerial photos, Bresser's Directory, and previous environmental reports. Prepared final report with findings.

Detroit Lead Deposition Project, Phase II, Detroit, MI, USEPA- START, Associate Project Scientist. Managed on-site XRF laboratory. Duties included, logging in all soil samples, compositing discrete samples, drying and sieving samples, calibration of the XRF, and analyzing the samples using the XRF. Provided accurate data within 1 day turnaround time. Analyzed more than 554 samples in 20 days.

Pine River, St. Louis, MI, Michigan Department of Environmental Quality, Assistant Project Scientist. Worked with team to collect sediment samples using Lexan tubes. Assisted in sample preparation and documentation of activites. Authored Health and Safety Plan for scheduled activites including boating tasks. Assisted in logging of sample cores and preparing samples for lab analysis.

Detroit Lead Deposition Project, Phase I, Detroit, MI, USEPA-START, Assistant Project Scientist. Conducted soil sampling within the City of Detroit using powered augers. Used WESTON-designed FieldFast program to log samples, created automated sample bottle labels, and chain of custody records in the field. Used Trimble GPS unit to obtain exact sample locations.

Superfund Remedial Investigation and Feasibility Study, St. Louis, MI, Michigan Department of Environmental Quality, Assistant Project Scientist. Worked with team on mutli-phase remedial investigation and feasibility study. Provided technical and administrative support to other field team members when needed. Produced analytical tables for numerous reports. Validated and managed all site data from numerous labs using Enviro-Data program. Presented large volumes of data in comparison with MDEQ Part 201 Standards. Worked with EPA and MDEQ labs to provide data in proper formatting for data management system. Managed site database containing past and present data. Worked with numerous sub-contractors. Used Forms II Lite software for samples and chain of custody forms. Packed and shipped samples to numerous labs for analysis. Prepared photo logs for all activities that took place on site. Prepared HASP and amendments for various phases. Ensured all personnel were current with proper training.

Jefferson North Assembly Plant, Daimler-Chrysler (JNAP), Detroit, MI, Assistant Project Scientist. Conducted quarterly groundwater sampling at site using peristaltic pump and disposable bailers. Water level meter and field parameter meter (ph, conductivity, and temperature) were both used. Completed Chain of Custody and shipped samples to lab. Generated quarterly reports presenting data to client.

Key Projects (Continued)

BEA, Waterfront Reclamation and Casino Development Project (WRCDP), City of Detroit, MI, Assistant Project Scientist. Worked as a team member to prepare reports for the client. Analyzed data from soil and groundwater samples to provide accurate tables in comparison to State criteria.

Phase I and II ESA, Waterfront Reclamation and Casino Development Project (WRCDP), City of Detroit, MI, Assistant Project Scientist. Worked as a team member to conduct Phase I ESA including site visit and assessment survey. Activities included; site inspections, historical research, preparation of chemical or hazardous materials inventories, and identification of potential environmental liabilities associated with subject properties.

Huron Landfill, Marine City, MI, Assistant Project Scientist. Responsibilities included soil sampling, air monitoring using MultiRae, and recording all information/data that was collected. Packed, preserved, and shipped all samples to lab.

Gateway Initiative, East St. Louis, IL, Army Corps. of Engineers, Assistant Project Scientist. Worked with sampling team to investigate 12 abandoned industrial sites and surrounding properties. Performed surface soil sampling using XRF to determine level of metals in the soil. Collected subsurface soil samples using hand augers. Prepared Chain of Custody, packed, and shipped samples to lab. Used Trimble GPS to log each sample location.

AFL-Automotive, Dearborn, MI, Assistant Project Scientist. Worked with client to obtain discharge permits for waste streams within facility. Sampled waste streams and generated reports to determine which locations did not meet criteria for City of Detroit.

Carrier Creek Watershed Renewal Project, Eaton County, MI, Michigan State University, MI, Undergraduate Student. Responsibilities included researching the present and future land uses of the watershed area along with analyzing the soil and groundwater samples for contaminants. Worked with community on ways to renew the watershed area.

TONYA C. BALLA

Qualifications Summary

- Sixteen years of professional experience.
- Experience with Superfund emergency response, removal, and remedial sites, including project management; subcontractor management; preparation of quality assurance project plans (QAPPs); field sampling plans (FSPs); expanded, focused, and screening site inspection reports; feasibility studies; and cost estimating for alternatives and remedial design/remedial action (RD/RA) oversight.
- Over 14 years of U.S. EPA Contract Laboratory Program (CLP) experience as Sample Management Coordinator for ARCs, RAC, and START contracts.
- Over nine years of experience as the WESTON Illinois and Wisconsin Health and Safety Officer.
- Implemented corporate health and safety programs; conducted safety inspections; reviewed, commented, and approved site Health and Safety Plans (HASPs); provided training; assisted with medical monitoring program and ergonomics program.
- Experience in conducting due diligence Phase I and Phase II environmental assessments.

Fields of Competence

Civil/environmental engineering; field oversight and quality assurance/quality control (QA/QC) for environmental construction and site remediation; hazardous waste site assessments, including Hazard Ranking System (HRS) scoring with PRESCORE; environmental sampling; sample management; data validation/review and QA; Phase I audits; computer aided design (CAD).

Credentials

B.S., Environmental Engineering—Michigan Technological University (1991)
Professional Certificate in Watershed Management – Michigan State University (2006)
Project Manager Training, WESTON (2001)
40-Hour Health and Safety Training Course, OSHA 29 CFR 1910.120, University of Illinois (1992)
Incident Command System – Level 100 Training (2006)
8-Hour Managers and Supervisors Course (SHSC), OSHA 29 CFR 1910.120(e)(4), WESTON (1995)
8-Hour Hazardous Waste Refresher Course, OSHA 29 CFR 1910.120(e)(8), WESTON (2008)
10-Hour OSHA Construction Safety Training (1999)
First Aid/CPR/AED Training, WESTON (2008)
Hazardous Waste Management and Shipping for Environmental Professionals, 40 CFR 265.16, Eduwhere (2001)
Bloodborne Pathogens Training, OSHA 29 CFR 1910.1030, (1995); Refresher (2008)
Weston Solutions, Inc., Manual of Procedures for Shipping and Transporting Dangerous Goods Training Course, 49 CFR 172 Subpart H, WESTON (2008)

Employment History

1995-Present WESTON
1992-1995 BLACK & VEATCH Waste Science

Key Projects

U.S. Environmental Protection Agency (EPA) Region 5 Superfund Technical Assessment and Response Team (START), Various Locations, Project Manager. Currently managing numerous projects and multiple personnel under the EPA Region 5 START contract. Projects include emergency response support; removal site assessments; removal action oversight; potentially responsible party (PRP) removal oversight; oil spill investigations; emergency response activities; and BioWatch air monitoring support and response planning. Activities include organizing multidisciplinary teams to provide the necessary technical support; close communication with U.S. EPA On-Scene Coordinators (OSCs) to discuss project scope and status; coordinating, training, and managing site personnel; preparing and managing project budgets; and reviewing and preparing project deliverables (SAPs, HASPs, monthly progress reports, site assessment reports, and OSC reports). Sites are located throughout Region 5 with a focus on Illinois and Minnesota.

Data Evaluation and Feasibilty Study (FS), Muskegon, Michigan, Great Lakes National Program Office (GLNPO)/EPA, Ryerson Creek and Division Street Outfall, Project Manager. Prepared QAPP and Field Sampling Plan (FSP) for sediment and surface water chemical testing for polyaromatic hydrocarbons (PAHs), polychlorinated byphenols (PCBs), metals, and sediment toxicity testing (2005 and 2007). Researched and procured laboratories to conduct the sediment toxicity and specialized PAH testing. Lead the preparation and performed technical review of the data evaluation summary report detailing the sampling activities and findings. Coordinated the 2007 field and data collection activities to determine contaminants of concern and horizontal/vertical extent of contamination. Coordinating current data evaluation and focused feasibility study activities with GLNPO and Michigan Department of Environmental Quality (MDEQ).

Minneapolis I-35 Bridge Response, EPA, Minneapolis, Minnesota, Project Manager. Serves as the Project Manager for the START response to the Bridge Collapse. Coordinated the internal WESTON personnel and equipment and coordinated the START subcontractor resources. Procured emergency laboratory services, prepared sampling and analysis plans, coordinated air sampling and monitoring equipment, and coordinated overall field resources. Performed data review for all of the analytical laboratory results, prepared data summary tables, and assisted with the preparation of two field summary reports.

Bio-Terrorism Support, Confidential Projects, EPA, Various Region 5 Cities, Project Manager. Coordinate daily collection of air samples analyzed for biological and viral agents. Prepared Environmental Sampling Plans for outdoor, indoor, and special event air monitoring locations throughout EPA Region 5 cities in the event of a biological event or biological terrorist event. Coordinated and evaluated environmental sampling and response drills for multiple Region V cities. Attended multiple regional meetings and National Conferences on sampling media, sampling objectives, and determining public health risk.

Waste Management Survey, Chicago, IL, Department of Aviation (CDOA), Chicago, IL, O'Hare International Airport, Project Manager. Performed an assessment of hazardous materials, hazardous waste, special waste, universal waste, and solid waste assessments for the various trades throughout O'Hare. This assessment included an inventory of materials stored in the various trade buildings, interviews with airport personnel, and a report summarizing findings.

The report also highlighted the reduction in hazardous material usage and the increase in recycling that the CDOA has implemented. Tracked budget and prepared monthly progress reports.

Hazardous Waste Storage Facility (HWSF) Compliance Audit and Manifest Review, University Park, IL, Severn Trent Laboratory, Project Manager. Conducted an on-site inspection of the laboratory HWSF and reviewed records for compliance with 40 Code of Federal Regulations (CFR) Parts 262 and 265 pertaining to Resource Conservation and Recovery Act (RCRA) generators. Prepared a findings and observations summary report. Completed project on an accelerated schedule and under budget.

Phase I Environmental Audit, Des Plaines and Chicago, IL, CDOA, O'Hare International Airport, Project Manager. Prepared multiple Phase I environmental audits identifying potential environmental liabilities and hazards, and regulatory compliance issues for properties (commercial and residential) sought by O'Hare as part of the runway expansion.

Superfund Feasibility Study (FS), EPA, Evergreen Manor Site, Roscoe, IL, Senior Project Leader. Prepared an FS report for a site containing trichloroethane-(TCE) and tetrachloroethane-(PCE) contaminated groundwater. Evaluated process options (i.e., institutional controls and deed restrictions) based on effectiveness, implementability, and cost. Developed remedial alternatives for TCE and PCE contamination, including no action and pump-and-treat remedies, and monitored natural attenuation. Due to decreasing level of contaminants, monitored natural attenuation was recommended. Also prepared multiple QAPP/FSP amendments to support FS data collection activities.

Hazardous Material Assessment and Environmental Training, CDOA, O'Hare and Midway Airports, Chicago, IL, Project Leader. Assisted with hazardous materials assessment of chemicals stored at O'Hare International Airport, Midway Airport, and Meigs Field. This assessment included an inventory of materials stored in the airports, interviews with airport personnel, and a summary of the assessment findings and recommendations. Resulting activities included coordinating environmental training of CDOA personnel and creating a spreadsheet to track environmental and health and safety training. Training included hazardous communications (HAZCOM), asbestos awareness, lead-based paint awareness, first responders training, and respiratory protection training. Activities also included preparing a HAZCOM plan for Midway Airport, a potentially Infectious Waste SOP for use at O'Hare and Midway Airports, and a respiratory protection plan for O'Hare and Midway Airports.

Blood-Lead Study, Confidential Client, Coffeyville, KS, Project Leader. Researched laboratories that could support a pediatric blood-lead study so that blood-lead levels could be compared to lead levels in site soils. Procured two laboratories to analyze several hundred blood-lead samples. Reviewed the data against QC criteria, and reported on the data's usability.

Superfund Remedial Design (RD), Perham Arsenic Burial Site, EPA, Perham, MN, Associate Engineer. Prepared QAPP and FSP for groundwater monitoring of arsenic and lead. QAPP/FSP preparation included developing the analytical procedure specifications for arsenic and lead using drinking water requirements, ensuring adequate number and type of QC samples to emit regulatory requirements, and describing chain-of-custody procedures to ensure proper documentation. Prepared a laboratory scope-of-work package and procured a laboratory to perform the required analysis. Participated in multiple rounds of groundwater sampling, with 33

monitor wells per round. Performed a compliance check on the data using the EPA Functional Guidelines for Evaluating Inorganic Data.

Sample Management and Data Validation, Various Industrial and Superfund Sites, Multiple Clients, Senior Project Engineer. Performed sample management duties, including sample projections and confirmations, laboratory procurement, proficiency sample evaluation, laboratory audits, laboratory assignments, chain-of-custody paperwork and documentation, and sample tracking. Provided data compliance check for Superfund sites following the latest EPA Functional Guidelines for Evaluating Inorganic Data. Provided data validation for Pre-notice Program and other industrial projects.

Environmental Media Sampling, Various Industrial and Superfund Sites, Multiple Locations, Associate Engineer. Performed environmental media sampling, including soil, groundwater, surface water, sediment, leachate, and waste samples. Sample collection techniques included Geoprobe®, soil borings, and monitor well installation. Sample parameters included Target Compound List/Target Analyte List (TCL/TAL); benzene, toluene, ethylbenzene, and xylenes (BTEX); polychlorinated biphenyls (PCBs); and dioxins/furans. Participated in International Air Transportation Association (IATA) and Department of Transportation (DOT) training for environmental samples and hazardous wastes shipping.

Spill Prevention Control and Countermeasures (SPCC) Plan, Confidential Client, Illinois and Missouri, Associate Engineer. Prepared five SPCC Plans under a Licensed Professional Engineer's (P.E.) supervision. SPPC plans were prepared to comply with oil storage requirements. Plans were prepared for various Western Illinois and Missouri rail yards.

Waste Stream Analysis Reports, United States Postal Service (USPS), Central Illinois, Project Engineer. Performed field visits to USPS processing and distribution centers, and vehicle maintenance facilities in Central Illinois to gather information on recycling and material reuse and reduction. Prepared reports documenting current recycling and waste procedures. Recommendations for increased recycling, reuse, and reduction were incorporated into the report. Completed eight waste stream analysis reports.

Tank Removal Specifications, United States Postal Service (USPS), Chicago, IL, Project Engineer. Prepared tank removal bid specifications for a site containing four underground storage tanks (USTs) and a second site containing four aboveground storage tanks (ASTs). Provided AST cleaning, dismantling, and removal oversight.

Blue Bag Recycling Program, City of Chicago Department of the Environment (CDOE), Chicago, IL, Project Engineer. Cooperated with the CDOE on their blue bag recycling program study. This included segregrating blue bags from general refuse at a material recovery recycling facility. Blue bag condition, content, and weight were recorded for a 3-week period. Also assisted with field data collection of blue bag participation by household and street/neighborhood basis. Data were compiled in a spreadsheet format for client submittal.

Superfund Remedial Investigation (RI), EPA, Organic Chemical, Inc., Grandville, MI, Associate Engineer. Performed sample management duties for surface soil samples and approximately 80 monitor well samples during two sampling rounds. Duties included sample collection, chain-of-custody sample tracking, sample shipping, and data compliance check

assistance. In addition, assisted in monitor well installation, including several dense nonaqueous phase liquid (DNAPL) wells, and vertical groundwater sampling.

Due Diligence Investigation at Oil Refinery, Confidential Client, Port Arthur, TX, Associate Engineer. Participated in Southeastern Texas Safety Association Training (SETSA) covering site health and safety and emergency action procedures, lockout/tagout procedures, entrance procedures to hydrofluoric and sulfuric operable units (OUs), and site-specific benzene training. Collected more than 75 soil samples in areas of known contamination near site transformers and substations. Collected soil borings and water samples using a Geoprobe® sampling device. Sample analysis included TCL compounds, TAL analytes, PCBs, and limited dioxin samples near site cokers.

Superfund RA Oversight, Wheeler Pit, EPA, Janesville, WI, Associate Engineer. Performed technical oversight for more than 35,000 cubic yards (yd^3) of fly ash and paint waste materials waste consolidation; landfill cap construction, including installation of a fabric geomembrane; monitor well abandonment of two wells; and installation of four new monitor wells. Participated in quarterly groundwater sampling, and provided data compliance check. Provided technical review of construction completion reports and technical groundwater memorandum.

National Priorities List (NPL) HRS PRESCORE and Site Implementation Plan (SIP), Illinois and Pennsylvania, EPA, Associate Engineer. Evaluated site data for input into the PRESCORE model. Suggestions and recommendations were made to fully characterize and confirm existing site conditions. Overall site conditions were summarized.

LINDA J. KOROBKA

Qualifications Summary

- Twenty years of experience in environmental compliance evaluation and laboratory analysis.
- Sixteen years experience in organic laboratory data validation and nineteen years experience in inorganic data validation using U.S. EPA protocols.
- Nineteen years of U.S. EPA CLP sample management experience for U.S. EPA FIT, ESAT, ARCS, START and RACS contracts.
- Developed U.S. EPA CLP SAS program including SOPs for lab procurement, P.E protocols and laboratory audits.
- Audited over ten laboratories for U.S. EPA CLP SAS program using EPA audit protocols.
- Performed six DOE audits for EG&G Mound using DOE audit protocols.
- Twelve years experience in reviewing and writing QAPPs for U.S. EPA ARCS, RACS, START and RCRA contracts.
- Performed as U.S. EPA START contract quality assurance officer, lead chemist and project manager.
- Accredited and registered Asbestos Building Inspector in Michigan.

Registrations

Certified and Registered AHERA Asbestos Building Inspector, State of Michigan

Fields of Competence

Analytical chemistry, Environmental Project Management, Quality Assurance Project Plan (QAPP) development; data review; environmental analysis; sample management; field sampling; laboratory quality control; and laboratory SOP development.

Credentials

B.S., Chemistry-Saginaw Valley State University (1979)
40-Hour Hazardous Waste Site Training Course, OSHA 29 CFR 1910.120(e)(3), WESTON (1988)
8-Hour Hazardous Waste Refresher Course, OSHA 29 CFR 1910.120(e)(8), WESTON (2008)
24-Hour Asbestos Building Inspector Course, USEPA 40 CFR 763(E) AHERA; USEPA 40 CFR 61, A&M NESHAPS AHERA/ASHARA Amendments and MI P.A. 440 (Amended)

Employment History

1988-Present	WESTON
1987-1988	The Bionetics Corporation
1986-1987	G.D. Searle (Temporary)
1986	Eli's Cheesecake (Consultant)
1985	Charlotte Charles
1979-1985	Kraft, Inc.

Key Projects

Kraft, Inc., R&D facility, Glenview, Illinois. Analytical Chemist. Performed inorganic and wet chemistry analytical methods on food samples including GFAA metals, AA metals, ash content, Total Kjeldahl nitrogen, acidity, alkalinity, nitrate, nitrite, sulfate, sulfite, chloride, and pH tests.

Key Projects (Continued)

Kraft, Inc., Corporate Headquarters, Glenview, Illinois. QA/QC Chemist/Laboratory Methods Specialist. Researched HACH and other types of field-test kits for use in food plant laboratories for in-process-control and finished product compliance tests. Issued and amended plant laboratory methods for monitoring raw materials, in-process control product status and final product characteristics for compliance with FDA standards of identity. Audited plant labs against company SOPs and for FDA compliance. Assisted plant labs with lab equipment problems and implementation of new analytical methods.

Kraft, Inc., Stockton, Illinois. Laboratory Supervisor. Supervised four laboratory technicians. Responsible for raw material, in-process control and final product testing of natural cheese produced in the plant. Wrote daily, weekly and monthly reports summarizing analytical results. Acted as the plant manager and QC manager during weekend rotating schedule.

G. D. Searle, R & D facility, Skokie, Illinois. Analytical Chemist. Trained to perform liquid chromatography on standards used to monitor research compounds produced at the facility.

The Bionetics Corporation, Chicago, Illinois. QA/QC Coordinator. U.S. EPA Great Lakes National Program Office (GLNPO) contractor. Responsible for laboratory QA/QC program for data generated by GFAA-metals, ICP-metals, GC-volatile organic compounds (VOCs), GC/MS-semivolatiles, pesticides and PCBs and water quality analyses on water samples collected during U.S. EPA GLNPO Great Lakes sampling cruises. Responsible for implementation of biannual inter-laboratory performance evaluation program required for all chemical water quality parameters. Continually monitored quality control markers of water quality parameters and wrote quarterly reports summarizing the quality control program of the Great Lakes water quality monitoring contract. Acted as a back-up Project Manager and worked with GLNPO managers as needed. Assisted GLNPO with laboratory Standard Operating Procedure amendments and validated water quality final data deliverables. Assisted with the preparation of the GLNPO water quality summary report generated from the water quality data provided by the contract chemists and biologists.

Data Validation, Resource, Conservation, and Recovery Act (RCRA) Facility Investigation (RFI), Reserve Environmental Services, Inc., Project Scientist. Coordinated and validated environmental data collected during RFI including soil, waste, dense non-aqueous phase liquid (DNAPL), groundwater, surface water, and sediment samples. Managed data validation team and coordinated with data base management team. Prepared data quality reports for incorporation into the RFI report.

Data Validation, Various Locations, Multiple Clients, Project Scientist. Coordinated and implemented data validation system for all analytical data used by office. Trained data validators. Assisted in setup of databases to track sampling, analysis, data validation, and final entry of data points into system. Interfaced with laboratory on daily basis regarding sampling/analysis discrepancies. Worked with Project Managers, Project Directors, geologists, and engineers to ensure smooth implementation of system.

ESAT Contract, Chicago, IL, Region V, U.S. EPA, Associate Project Scientist. Reviewed approximately 180 inorganic data packages for Superfund CLP compliance; analyzed

Key Projects (Continued)

approximately 10 data sets of Superfund samples for GFAA metals, cyanide and mercury using Region V CRL protocols.

Analytical Analyses, Various Locations, EG&G Mound, DOE, Lab Liaison. Managed sample analytical analyses and validation coordination for operable unit. Assisted Team Leader with laboratory invoice completeness, lab performance audit, and data validation completeness.

Analytical Data and Quality Control Audits, Various Locations, EG&G Mound, DOE, Auditor. Trained as DOE auditor. Assisted on DOE audits. Advanced to DOE lead auditor. Analysis of data and quality control audits from sampling tasks for final reports.

CRL, ESAT Contract, Michigan, Region V, U.S. EPA, RSCC Chemist. Scheduled U.S. EPA Region V's CLP laboratory space for up to 10 engineering firms plus MDEQ, MPCA, WDNR, IEPA, and OEPA. Managed sample coordination with engineering firms, SMO and the U.S. EPA Region V. Interacted with U.S. EPA RPMs, QAO, CRL, SMO, ESAT, and engineering firms regarding all stages of Superfund projects (i.e., RIFs, SIs, RDs, O and Ms) performed in Region V. Wrote and reviewed Region V CLP SAS documents for Superfund projects in the region.

ARCS Program, Indiana, Region V, U.S. EPA, Sample Management Coordinator. Scheduled CLP samples for WESTON's Mason County Landfill site (MI). Assisted in management of sampling activity. Validated organic and inorganic data from sampling activities.

ARCS Program, Indiana, Region V, U.S. EPA, Project Scientist. Mobilized and performed as team leader for on-site reconnaissance for a number of the SSI sites and ESI sites in Indiana. Wrote screening site inspection reports and sampling plans for some of these SSI sites.

Scored a number of sites using the U.S. EPA Prescore computer program in preparation for HRS package. Evaluated site inspection reports to prioritize site for HRS. Wrote site inspection prioritization reports. Mobilized and sampled SSI sites using CLP protocol and according to SSI QAPP.

RACS Contract, Region V, U.S. EPA, Senior Project Scientist. Performed three laboratory audits for U. S. EPA Remedial Alternative Contracting Strategy (RACS) Special Analytical Services (SAS) laboratory contracts. Laboratories audited were: APL, Milwaukee, Wisconsin; ChemTech, Englewood, New Jersey; and Southwest Research Institute, San Antonio, Texas.

Sampling Plans, EG&G Mound, DOE, Senior Project Scientist. Wrote six sampling plans for investigative environmental projects to be performed on site.

Mixed Waste Contract Laboratory, B&W Mound, DOE, Transition team member. Wrote a Scope of Work for mixed waste contract laboratory to replace existing on-site laboratory. Audited on-site radioactive and chemistry laboratory.

QAPP Development, Confidential Client, International Creosoting Site, Beaumont, TX, Senior Project Scientist. Assisted in QAPP development including analytical and quality control requirements and data validation tables.

Key Projects (Continued)

QAPP Development, TNRCC, State Lead Superfund Sites, Senior Project Scientist. Assisted with QAPP development for two sites. Designed quality control, analytical and data validation tables.

Asbestos Surveys/Abatement, Ausco, D&B, Midwest Aluminum, and Viking Die Cast, MDEQ, Act 210 sites, Senior Project Scientist. Performed asbestos surveys. Provided oversight of demolition and asbestos abatement activities. Performed air monitoring during demolition activities. State licensed as Asbestos Building Inspector.

Multiple Projects, USPS, Greater Michigan District, Senior Project Scientist. Performed the following activities at various USPS facilities:

- Set up and organized environmental file systems. Obtained documentation to complete environmental records.
- Performed Quality Assurance Review (QAR) audits and wrote QAR reports.
- Set up and completed MSDS systems.
- Performed utility/energy audits.
- Performed a Phase I Environmental Site Assessment with a limited soil investigation for the Flint, Michigan, Processing and Distribution Center. Wrote the Phase I report.

Asbestos Air Monitoring and Asbestos Sampling, City of Detroit, Senior Project Scientist.

During demolition of buildings, collected cartridge samples for asbestos analysis. Collected samples of suspect asbestos containing material for confirmatory analysis during building inspections.

Data Validation for Environmental Assessments, Daimler Chrysler, Various Facilities in Michigan, Senior Project Scientist. Validated data for investigative samples collected for Environmental Assessments, Remedial Investigations and Treatability Studies. Sampled at two facilities in southern Michigan.

MDEQ, Oliver Machinery Company Site, Project Manager. Responsibilities and duties included: open job, set budget, write work plan, set up bid specs for construction contractor, award contracts to subcontractors; monitor implementation of work plan, review and approve deliverables, write monthly progress reports to MDEQ project manager, interface with MDEQ project manager through life of project and perform job close out activities.

START Contract, Region V, U.S. EPA, Quality Assurance Officer. Responsible for development and implementation of QA program for U.S. EPA, Region V, START contract. Wrote program QAPP; developed, updated and implemented SOPs for contract.

START Contract, Region V, U.S. EPA, Lead Chemist. Responsibilities and duties included: set up lab subcontracts for analysis of environmental samples, validate laboratory data, track timeliness and quality of data deliverables, approve laboratory invoices, approve and develop sampling plans, develop data quality objectives and quality objectives for sampling, write analytical TDD amendments for change of scope events.

Key Projects (Continued)

START Contract, Region V, U.S. EPA, Project Manger. Responsibilities and duties included: set up project with U.S. EPA OSC (obtain scope, write sampling plan, assign personnel, write and review health and safety plan, order field equipment, and procure analytical laboratory), perform project (oversee site assessment, removal action or sampling event, assure proper procedures and documentation, write required report, write monthly forecasts, write monthly progress reports and write TDD amendments as necessary), close out TDD (write close out amendment, review files for deliverables and transfer files for closure), manage three START personnel (schedule assignments, supervise daily activities, assist with assignments, write emergency response duty schedule, monitor emergency response van and equipment status, evaluate START personnel performance for annual review).

Weston Solutions, Inc., Michigan Operations Safety Officer. Responsibilities and duties include: implementation of company health and safety program, ensure H&S training and certifications are up to date for all Michigan personnel, write and review site specific Health and Safety Plans, review subcontractor site specific Health and Safety Plans, assist with annual 8 Hour HAZWOPER Refresher training course, perform field audits at job sites to ensure operations are following site specific Health and Safety Plans, assist personnel with health and safety issues and concerns, work with Midwest Health and Safety Manager and Corporate Health and Safety Director to implement new Health and Safety programs and training courses as required.

Weston Solutions, Inc., Technical Manager. Responsibilities and duties include: act as a resource (chemist) for all Michigan projects, validate and review analytical data for various Michigan environmental projects, write and review analytical sampling plans and technical memorandum, perform evaluations of project analytical data for quality control summary reports.

ALEXANDRA L. CLARK

Qualifications Summary

- Over ten years of diverse experience in the environmental industry.
- Experienced in the management and oversight of remedial construction including structure demolition, contaminated materials removal, and site restoration.
- Experienced in field investigation, sampling, and analytical protocols for air, sediment, soil, groundwater, and surface water.
- Experienced in management and coordination of field sampling teams, strategies, and time-critical assessments and removals.

Fields of Competence

Project management, site investigations and remediation; remediation construction oversight; time-critical assessments and removals; regulatory guidance; and community relations.

Credentials

BS., Environmental Studies and Applications—Michigan State University (1998)
40 Hour Hazardous Waste Site Operation Course, OSHA 29 CFR 1910.120 (e) (3)
8 Hour Hazardous Waste Refresher Course, OSHA 29 CFR 1910.120 (e) (8)
8 Hour Site Health and Safety Officer Training Course
10 Hour OSHA Construction Health and Safety Training
30 Hour OSHA Construction Health and Safety Training
Department of Transportation/International Air Transport Association Certified
Bloodborn Pathogen Trained
CPR Certified
First Aid Certified

Employment History

1998-Present	WESTON
1997-1998	Michigan Department of Environmental Quality (Student Assistant)

Key Projects

Torch Lake Area Assessment, U.S. Environmental Protection Agency, Technical Support. Provided technical support for the time-critical assessment of shoreline, buildings, and other properties affected by former copper mining operations. Assessment preparation included development of a Work Plan and Incident Action Plans for the Areas of Interest. Fourteen Areas of Interest were investigated for contamination that could pose an imminent and substantial threat to human health and the environment.

Key Projects (Continued)

Florida Gas Plant Site, U.S. Environmental Protection Agency, Project Manager. Served as project manager during the time-critical removal action that included removal of coal-tar contaminated soil from a residential drainage ditch; installation of a sheet piling barrier to prevent off-site migration of coal tar; and installation of a network of monitoring wells and recovery wells for future monitoring/removal efforts. Preparation for the removal included assessment of the subsurface conditions to determine the suitability, lengths, and distances of vinyl sheet piling; and preparation of a drilling/well installation scope of work for the site.

Huron Development Landfill Site, Michigan Department of Environmental Quality, Project Manager. Served as project manager for assessment of abandoned landfill. Assessment actions included installation and sampling of perimeter monitoring points, installation of methane vent wells, and performance of a leachate pumping test. The overall objective was to determine any on-going threats to human health and the environment posed by the abandoned landfill.

Commodity Metals Site and Medbury Neighborhood Site Time-Critical Removal Action, U.S. Environmental Protection Agency, Emergency Response Branch, Project Manager. Served as project manager for time-critical assessment and removal of lead contaminated soil from over 100 residential properties.

Detroit Lead Assessments Project, Michigan Department of Environmental Quality, Project Manager. Served as project manager during the second phase of the project that entailed evaluation of suspected former lead smelting facilities to determine the presence of an on and off-site risk to human health.

Ryerson Creek/Division Street Outfall Sites, Michigan Department of Environmental Quality and U.S. EPA, Great Lakes National Program Office, Project Manager. Served as co-project manager for evaluation of the nature and extent of sediment contamination within target areas of the Muskegon Lake Area of Concern. WESTON used the sediment analytical data collected by the agencies under the Project Agreement to determine the risks posed to the environment by contaminants of concern in the sediment. Data evaluation was followed by preparation of a Focused Feasibility Study to determine the most feasible alternative for sediment remediation near the Division Street Outfall.

Inland Stamp Sands, Michigan Department of Environmental Quality, Senior Project Scientist. Served as technical lead and provided coordination, planning, and management for the project. The project entailed evaluation of stabilization alternatives for six inland surface water bodies affected by stamp sand erosion. WESTON performed a field investigation at each of the six sites that included collection of global positioning system (GPS) survey data; advancement of soil borings and test pitting to determine the vertical extent of stamp sand within the riparian zone; stream flow measurements; and collection of samples for geotechnical analysis. The field investigations supported development of a Focused Feasibility Study (FFS) that provided alternatives for stream bank and stamp sand stabilization including costs.

Migrating Stamp Sands, Michigan Department of Environmental Quality, Senior Project Scientist. Served as technical lead and provided coordination, planning, and management for the project. The project entailed performing a risk assessment to evaluate five re-use scenarios for

Key Projects (Continued)

the Gay and Point Mills, Michigan stamp sand deposits. The risk assessment concluded that the stamp sands may pose unacceptable risks to aquatic organisms. Therefore, WESTON performed a stamp sands bioassessment to assess the effects of stamp sand on benthic organisms for specific re-use scenarios. WESTON also provided coastal engineering services to evaluate alternatives for mitigation of the stamp sand migration at Gay, Michigan to preclude further erosion of the original stamp sand deposit and affected Lake Superior shoreline. The alternatives, including costs, were presented in a Technical Evaluation (TE) document.

Old Charcoal Iron Site, Michigan Department of Environmental Quality, Project Scientist. Provided technical review and support, project coordination, planning, and management for the investigation Phase II Response Action at the site. The RI activities at the site included test pitting, soil boring advancement, monitoring well installation, and groundwater monitoring. Based on the results of the RI, the Phase II Response Action was implemented in winter 2004/2005 and included removal and off-site disposal of grossly contaminated soil and wood tar. WESTON provided management and oversight of the Phase II Response Action.

The Bay de Noc Site, U.S. Environmental Protection Agency, Emergency Response Branch, Project Scientist. Served as technical lead for the time-critical investigation and removal of creosote-related contamination at the site which is located on the shoreline of Little bay de Noc of Lake Michigan. Investigation measures included soil boring installation, temporary monitoring installation, beach and off-shore soil/sediment sampling, and surface water sampling. The project was time-critical due to the severe migration of contaminants into Lake Michigan and the potential for exposure to residents from grossly contaminated sediment.

Delta Chemical & Iron Company Site, Michigan Department of Environmental Quality, Project Scientist. Served as technical lead for the investigation and remediation of the properties associated with the former United States Air Force (USAF) defense fuel supply point and Delta Chemical & Iron Company Site. Technical support activities included development of several work plans and associated budgets; planning, management, and execution of field activities including soil boring/monitoring well installation, collection of field samples including soil, groundwater, surface water, slag, and sediment; and investigation reporting. A sediment evaluation was also performed using existing sediment quality guidelines from various regulating agencies. The evaluation subsequently lead to the full-scale sampling of sediments at the site and performance of 10-day sediment toxicity tests. Reporting for the site was performed in various phases including an initial RI Report and three subsequent addendums. In 2004, WESTON performed oversight and management of the Interim Response (IR) activities at the site on behalf of MDEQ. The IR included removal and off-site disposal of grossly contaminated soil, wood tar, and sawdust.

Kinross Manufacturing Corporation Site, URS Corporation, Project Scientist. Developed work plan for RI activities; executed field activities; and provided technical support for the RI report for the former USAF and munitions facility.

Sodergren's Store Site Site, Michigan Department of Environmental Quality, Project Scientist. Provided on-going technical support for the investigation of the former UST site. Support activities included work plan and budget development; execution of field activities

Key Projects (Continued)

including soil gas survey, bedrock monitoring well installation, groundwater monitoring, indoor air sampling, and single well permeability testing; and investigation reporting.

Residential Wells-Eben Junction Site, Michigan Department of Environmental Quality, Project Scientist. Provided on-going technical support for the investigation and remediation of the former UST site. Support activities included work plan and budget development; execution of field activities including bedrock monitoring well installation, groundwater monitoring, indoor air sampling, and free product bail down testing; and investigation reporting.

Various Projects, Michigan Department of Environmental Quality, Project Management Contract, Project Scientist. Provided on-going technical support and oversight of professional service contractors and trade contractors related to site investigation and clean-up efforts.

Aboveground Storage Tank Guidebook, Royal Oak District, United States Postal Service, Project Scientist. Developed a guidebook on procedures associated with the storage of combustible liquids in aboveground storage tanks at various Postal facilities.

Mobile Fleet Fueling Report, United States Postal Service, Project Scientist. Conducted a review of the environmental concerns, health and safety issues, and costs associated with on-site mobile fleet fueling for Postal Service vehicles in Michigan, Indiana and Illinois. The review was made into a comprehensive report outlining the associated requirements and costs to be used by the client in deciding if on-site mobile fleet fueling was appropriate for their operations. The report then was put into presentation format to be presented to various Postal Service facilities.

Florida Gas, Laurium, MI, Michigan Department of Environmental Quality, Project Scientist. Provided technical and oversight assistance for Project Management of investigation and remediation activities at the site where coal tar was the primary contaminant of concern as a result of a former manufactured gas plant. Technical assistance activities included review and evaluation of historical site data, development of the Scope of Work activities for additional Remedial Investigation activities at the site. Oversight activities included oversight of Remedial Investigation activities in March 1999, and the 10-week Drainage Ditch Remediation Project in Summer, 1999.

Pointe Mouillee Former Shooting Range Site, South Rockwood, MI, Michigan Department of Natural Resources, Project Scientist. Provided construction oversight of lead remediation activities at the site. Oversight activities include daily tracking of the treatment and disposal of lead-contaminated soils, and general trade contractor oversight for six months of the ten month project.

Key Projects (Continued)

Qualifications Summary

- U.S. EPA Region V START Deputy Program Manager for Michigan projects including hazardous spill response, counter terrorism response, removals, and site assessments.
- 20 years of experience in the environmental consulting field including managing and participating in hazardous waste management, facility decommissioning, chemical and biological emergency response, remedial investigation and remediation projects and biological studies.
- Project Manager for Project Management contract with Michigan Department of Management and Budget. Task assignments included preliminary site assessment, remedial investigation, facility decommissioning and demolition, accelerated removal action, and remedial action planning and implementation.
- Project Manager for numerous Michigan Part 201 sites under LOE contract to the Michigan Department of Environmental Quality. Sites included RI/FS, remedial design, and O&M.
- Project Manager for USPS contracts in MI, including UST management, waste stream analysis reports, and AHERA asbestos surveys.
- Managed site assessments, removals and emergency responses at numerous hazardous waste sites for U.S. EPA Emergency Response/Removal Program in Region V.
- Field Biologist and Field Team Leader for acid precipitation research project. Responsibilities included coordinating and conducting fisheries, macroinvertebrate, water chemistry, and limnological surveys in lakes and streams.

DANIEL M. CAPONE

Fields of Competence

Program and project management, hazardous waste management, emergency response to chemical and biological releases, investigations at uncontrolled hazardous waste sites and leaking underground storage tank (UST) sites, RI/FS studies, facility decommissioning and demolition, brownfield redevelopment, health assessment studies, real estate transfer environmental assessments, environmental compliance audits, UST management and compliance; CERCLA-funded site cleanup projects including cleanup design, implementation, and oversight, hydrogeological studies, and preparation of bid documents for removal actions. Freshwater aquatic studies focusing on fisheries, sediment, macroinvertebrate, water chemistry, and flora surveys.

Credentials

B.A., Biology—Hamilton College (1983)
Graduate Certificate, Hazardous Waste Management—Wayne State University (1993)
Hazardous Materials Incident Response Operations Course, U.S. Environmental Protection Agency (U.S. EPA) (1998)
Incident Command System (ICS) Training (Levels100, 200, and 300, 700) – FEMA 2005
4-Hour Radiation Protection Training, WESTON (2005)
8-Hour Air Monitoring and Sampling Training, WESTON (2007)
Advanced Radiation Awareness Training - 2006
Environmental Chemical Hazard Assessment Course, NOAA (1987)
40-Hour Hazardous Waste Site Training Course, OSHA 29 CFR 1910.120(e)(3), WESTON (1987)
8-Hour Hazardous Refresher Course, OSHA 29 CFR 1910.120(e)(8), WESTON (2004)
Site Health and Safety Coordinator Course, OSHA 29 CFR 1910.120(E)(4), WESTON
ASTM Risk-Based Corrective Action (RBCA) Training, Standards Technology Training (1995)

Employment History

1987-Present WESTON

Key Projects (Continued)

1984-1987 EA Engineering, Science, and Technology

Key Projects

U.S. EPA Region V START Contract, Michigan START Manager, Deputy Program Manager. Manager for Michigan START projects including emergency chemical and biological spill response, site assessments, CERCLA funded removal actions, and other technical support. Responsible for management of staff and projects, training, preparedness for emergency response, and client communication.

Louisiana Hurricane Response, New Orleans, LA, United States Environmental Protection Agency (U.S. EPA), Region 6-START 2, START Operations Section Chief, START Incident Commander. Coordinated efforts of 300+ START personnel, under the direction of the U.S. EPA, for activities involving multiple federal, state, and local agencies directly involved in the emergency response efforts for Hurricanes Katrina and Rita. Activities included reconnaissance (land, water, and aerial), environmental and damage assessments of various hurricane-affected facilities, debris collection (orphan containers and household hazardous waste), multimedia environmental sampling, and emergency responses after initial landfall of the hurricanes.

Coordinated daily staffing for field assignments as Operation Section Chief. As Incident Commander, responsible for daily coordination of all START activities across the ICS structure and directly coordinated with U.S. EPA Command Staff.

Operation River City, Louisville, KY, U.S. EPA Region V, Project Manager (Controller). Prepared for and participated in U.S. EPA's largest counterterrorism exercise in Louisville, KY. During the 72-hour long exercise, served as an event Controller, assisting with setup and directing of dirty bomb explosion event response.

Emergency Response to Potential Anthrax Releases, U.S. EPA Region V START, Detroit, MI, Responder. Collected samples at sites in the Detroit area where anthrax contamination was suspected following bioterrorism threats. Used the Bio Threat Analyzer and conducted HazCat field analysis to evaluate samples in the field regarding the presence of anthrax spores.

Carl's Retreading Removal Action, U.S. EPA Region V START, Grawn, MI, Project Manager. Project Manager for removal support during excavation of pyrolytic oil contaminated soil resulting from large tire fire. Prepared and implemented comprehensive air monitoring program to collect real-time air monitoring data during removal action to insure protection of nearby residences and businesses. Utilized real-time MonitorFast and AreaRAE monitoring systems which allowed for continuous collection of VOC air monitoring data from multiple monitoring stations utilizing an on-site data management system. Managed daily START activities during the removal including air monitoring, contractor oversight and documentation, directing and documenting extent of soil excavation, cost tracking, sampling, and data management.

Key Projects (Continued)

Columbia Shuttle Recovery Project, U.S. EPA Region VI START, Palastine and Nacogdoches, Texas, Team Leader. Led team of up to 65 technical field personnel at the Palestine and Nacogdoches, Texas, field office on hazard screening and documentation of material recovered after the Space Shuttle Columbia incident. Duties included generation and management of work schedules, implementation of WESTON health and safety policies, training of field personnel on procedures for hazmat screening and data collection, ensuring quality control of collected data, logistical support to EPA, and coordination with EPA, Federal Emergency Management Agency (FEMA), the National Aeronautics and Space Administration (NASA), U.S. Forest Service, and other federal, state, and local agency officials within the established unified command system.

Project Management Services - Various Sites in MI, MDEQ/MDMB Project Management Contract, Project Manager. Project Manager for PM contract with MDEQ/MDMB. Sites include large-scale demolition and impaired property redevelopment, RI/FS design, remedial action, construction management and O&M. Mr. Capone manages all aspects of project assignments including project planning development of work plan outlines and requests for proposal, professional services contractor solicitation, procurement and management, construction contractor solicitation, procurement, and management and technical review of all project reports and deliverables. Example sites include:

- **Former Auto Specialties Company (AUSCO) site, St. Joseph, MI**. Activities included removal and on-site crushing of over 450,000 ft^2 of concrete building slabs and foundation removal and disposal of contaminated storm sewer, and abatement of free-product areas on site.
- **Buchanan Steel Site, Buchanan, MI.** Activities include asbestos survey and abatement, PCB transformer removal and disposal demolition of 100,000 ft^2 steel foundry buildings, and RI of soil and groundwater.
- **Edgewater Development Site, Benton Harbor, MI.** Activities include pre-demolition assessment of multiple former steel foundry buildings, asbestos abatement, removal and disposal of hazardous materials and USTs, building demolition, and RI subsequent to demolition.
- **Former Fletcher Paper Mill Site, Watervliet, MI.** Activities include pre-demolition assessment of 400,000 ft^2 former paper mill facility, asbestos abatement, removal and disposal of hazardous materials and USTs, building demolition, and other activities associated with the facility decommissioning.

Decommissioning and Demolition Management, D&B Buildings site, Buchanan, MI, MDEQ/MDMB Project Management Contract, Project Manager. The D&B Buildings site consisted of 20 abandoned industrial buildings slated for demolition and subsequent redevelopment by the City of Buchanan. WESTON managed the implementation of the limited investigation activities, design and implementation of interim response actions, and building demolition phases of the project to the point where the identified environmental hazards were eliminated and the site was prepared for redevelopment. Management services included coordinating investigations and pre-demolition hazard abatement activities, assembling bidding documents, soliciting bids, and entering into contracts for all required pre-demolition and

Key Projects (Continued)

demolition construction services. Subsequent to the completion of the demolition activities, WESTON planned and managed a test pit investigation to determine the extent of subsurface soil and groundwater contamination beneath the former building slabs. WESTON completed all the above activities within twelve months from receipt of project assignment, well under the budget established by the State. Mr. Capone was responsible for the management of all facets for the project including planning, procurement and management of subcontractors, client contact, management of field personnel, and reporting. Subsequent to the test pit investigation activities, WESTON planned and managed free phase liquid recovery activities at the site and is currently managing recovery events at the site. Additionally, WESTON managed RI activities throughout the McCoy Creek Industrial Park (MCIP) area and assisting the MDEQ with potentially responsible party (PRP) negotiations regarding the MCIP site.

Remedial Investigations for Numerous Part 201 Sites Under LOE Contract, Various MI Locations, MDEQ, Project Manager. Scope of work for projects has included work plan and sampling and analysis plan development for investigations, field investigation implementation, review and evaluation of field investigation results relating to Party 201cleanup criteria, report preparation, and bid document preparation for site cleanups. All work performed in compliance with State of Michigan Act 64 and Act 451 regulations and federal RCRA, CERCLA, and OSHA regulations.

Remedial Investigation and Groundwater Modeling Support, Sundstrand Heat Transfer Site, Dowagiac, MI, MDEQ, Project Manager. WESTON was tasked to prepare a comprehensive Work Plan for completion of a RI, FS, and Remedial Action Plan for the Sundstrand Heat Transfer site. Site contains high concentrations of chlorinated volatile organic compounds in the groundwater. Upon completion of the Work Plan, WESTON implemented some of the RI tasks and conducted oversight of PRP conducted RI tasks. WESTON implemented a site-wide geophysical survey at the site utilizing DC Resistivity and Electromagnetic Offset Logging methods. WESTON subsequently prepared a groundwater flow model and capture zone evaluation for the site. WESTON assisted MDEQ throughout the project with technical review of PRP report submittals and PRP negotiations.

Phase I ESA/Phase II Investigation, Anchors Way Site, St. Joseph, MI, MDEQ, Project Manager. Planned and conducted Phase I environmental assessment, Phase II soil and groundwater investigation, and preparation of preliminary Baseline Environmental Assessment (BEA) report for impaired property redevelopment of site on Industrial Island in St. Joseph River.

RI, Design, and O&M Oversight of Groundwater Treatment System, Manistee Plating Site, Manistee, MI, MDEQ, Project Manager. Planned and conducted soil and groundwater investigation at historic plating facility along the bank of the Manistee River. Determined the extent of hexavalent chromium contamination and conducted groundwater modeling to determine optimum pumping rates and recovery well placement for treatment system. Designed infiltration gallery to be utilized in conjunction with groundwater treatment system. Prepared performance based bid specifications for installation and O&M of hexavalent chromium groundwater treatment system. Assisted client during contractor procurement activities and provided oversight of system installation and O&M. Subsequently managed treatability study to

Key Projects (Continued)

evaluate in-situ soil fixation remedial options for enhancing the treatment system. Subsequently implemented the soil fixation enhancement to the treatment system to speed up site closure.

RI/FS and Interim Response Action, Henco Site, Niles, MI, MDEQ, Project Manager. Managed multi-phased RI to determine extent of soil, sediment, and groundwater contamination resulting from historical plating waste discharges. FS conducted to evaluate options for soil/sediment treatment and disposal. Prepared bid specifications to address excavation on-site fixation and off-site disposal of 6,000 yd^3 of contaminated soil and creek bed sediments. Assisted client with procurement of contractor and provided technical review on contractor submittals. Managed oversight of interim response contractor and provided technical assistance to client in resolving numerous problems with contractor throughout interim response cleanup. Managed multi-phased groundwater investigation during which several contaminated residential wells were identified. Successfully determined extent of two groundwater plumes and prepared FS and design of groundwater treatment system. Conducted oversight of installation of treatment system and O&M activities.

RI, Aurora Refinery, Elsie, MI, MDEQ, Project Manager. Developed and implemented Phase I Work Plan to determine approximate boundaries of multiple groundwater contamination plumes resulting from historical oil refining operations across 40-acre site. Conducted soil gas survey across the site to determine potential source areas and migration pathways. Subsequently developed and implemented Phase II Work Plan to determine the vertical and aerial extent of groundwater contamination involving the installation of approximately 30 additional monitoring wells. Responsible for technical management of project staff and subcontractors and for management of project budget and schedule.

RI, Industrial Plating Area Site, Ludington, MI, MDEQ, Project Manager. Designed and implemented Phase I, II, and III hydrogeological investigation Work Plans to evaluate extent of hexavalent chromium and cyanide plumes resulting from historic plating waste releases. Installed monitoring wells to 100+ feet and conducted vertical profiling of aquifer in 10-foot intervals during installation. Collected, field screened, interval samples, and supervised well installation, development and sampling. Responsible for technical management of project staff and subcontractors and for management of project budget and schedule. Worked extensively with MDEQ staff in developing alternative sampling and well installation methods.

RI and Interim Response Action, Aurora II Site, Ashley, MI, MDEQ, Project Manager. Designed and implemented extent of soil contamination investigation across a rural 1.5-acre site contaminated with metals and petroleum constituents. Developed bid document for excavation, treatment, and disposal of contaminated soil. Provided technical assistance to MDEQ in review of awarded cleanup contractor documents (work plan, health and safety plan, and schedules). Managed oversight of interim response action and developed cleanup verification sampling plan to comply with MDEQ requirements. Conducted follow-up remedial investigation to determine extent of remaining groundwater contamination. Managed project staff, subcontractors, project budget and schedule throughout the duration of the project.

RI and Interim Response Action, Woodland Oil Site, Frankfort, MI, MDEQ, Project Manager. Designed and implemented extent of soil contamination investigation at bulk oil storage facility. Developed bid document for excavation and disposal of contaminated soil.

Key Projects (Continued)

Provided technical assistance to MDEQ in review of awarded contractor documents. Conducted cleanup contractor oversight for MDEQ during implementation of soil excavation and disposal, including collection of cleanup verification soil samples. Subsequently developed and implemented Phase II RI Work Plan addressing characterization and extent of groundwater contamination at the site. Also prepared feasibility and cost analysis addressing remediation area of grossly contaminated saturated soils.

PCB Superfund Removal Project, Detroit, MI, U.S. EPA Emergency Response Branch, Region V, Project Leader. Provided technical assistance to U.S. EPA during all aspects of cleanup of a PCB-contaminated building. Developed and implemented extent-of-contamination and cleanup verification sampling plans. Cleanup involved decontamination and/or removal of metal surfaces, concrete building surfaces, soil, drain line and sewer line sediment, as well as treatment of PCB-contaminated water.

Phase I Environmental Assessment, Saginaw, MI, Confidential Client, Site Manager. Conducted environmental assessments at three industrial facilities involved in metal component fabrication. Identified actual and potential environmental liabilities associated with past and present operations relating to RCRA, CERCLA, SARA, TSCA, and CAA and state specific regulations.

Phase I and II Environmental Assessment, Detroit, MI, Confidential Client, Site Manager. Conducted Phase I environmental assessment at small manufacturing facility. Environmental liability concerns identified during Phase I led to Phase II investigation and subsequent excavation and disposal of soil contaminated area outside facility.

Leaking UST Initial Assessment and Closure, Center Line, MI, Confidential Client, Project Manager. Planned, coordinated, and oversaw initial assessment activities resulting from a confirmed UST release. Initial assessment activities indicated that site closure could be obtained using Risk Based Corrective Action (RBCA) Tier I screening levels. Subsequently prepared leaking UST Closure Report CUSTP for project.

Numerous Environmental Projects, Various Locations, U.S. EPA Emergency Response Branch, Region V, Technical Assistance Team (TAT) Contract, Project Leader. Field Project Coordinator managing over 15 hazardous waste emergency responses involving transportation accidents, abandoned drums, chemical releases, and landfill fires. Field Project Coordinator managing over 30 site assessments at uncontrolled hazardous waste sites. Extensive environmental sampling experience including collection of surface water, groundwater, sediment, soil, sludge, air, and industrial waste samples. Conducted several Spill Prevention Control and Countermeasures (SPCC) inspections of oil storage facilities in accordance with 40 CFR Part 112 and provided on-site technical assistance during oil spill cleanups. Instructor for First Responder Training Course for hazardous materials incident response given to firemen, policemen, county, and state health personnel. Provided technical and on-site consulting to U.S. EPA personnel at CERCLA-funded removal sites involving PCB-contaminated soils, heavy metal-contaminated soils, drum excavation and removal, mercury vapor releases, PCB-contaminated buildings, groundwater contamination, low level radiation, UST removals, and plating wastes. Also conducted alternative technology screening for Superfund sites, developed site-specific health and safety plans per all applicable OSHA regulations, developed and

Key Projects (Continued)

implemented site-specific extent of contamination and post cleanup sampling plans, geophysical investigations, and air monitoring.

Numerous Environmental Services, Michigan, USPS, Project Manager. Project Manager for Basic Pricing Agreement (BPA) contracts with three USPS districts in Michigan. Managed various environmental services provided under these contracts including UST Control Plans, Waste Stream Analysis surveys, AHERA asbestos surveys and operations and maintenance plan development, hazardous waste manifest training and UST compliance testing for USPS personnel and air emissions inventory surveys. As Project Manager, was responsible for the technical direction of the project team, including subcontractors, maintenance of budget and schedule, and maintaining routine client contact.

Various Environmental Services, New Boston, MI, Confidential Client, Project Manager. Provided various environmental services to manufacturing facility in preparation for facility wide environmental audit. Services provided included preparation of Stormwater Pollution Prevention Plan, drinking water sampling for lead and copper, MSDS file review and update, waste stream, sampling and characterization, and technical assistance. Work was completed on a fast track basis in order to prepare facility for scheduled corporate environmental audit. Maintained routine contact with client representative to complete assigned tasks on time.

Groundwater In-Situ Bioremediation Pilot Study, Benton Harbor, MI, Confidential Client, Project Manager. Project included evaluation of existing groundwater investigation information, design of in-situ bioremediation pilot system to evaluate effectiveness of methanol enhanced anaerobic biodegradation of chlorinated VOCs, installation of pilot system, and start-up and monitoring of system. System is currently operating with monthly sampling and evaluation. Worked with client to train facility personnel on the routine service and maintenance of system, resulting in a considerable cost savings to client. Six month pilot study is on schedule and significantly under budget.

Leaking UST Initial Assessment, Flint, MI, USPS, Project Manager. Planned, coordinated, and oversaw initial assessment activities resulting from confirmed release from a gasoline UST. Initial assessment identified free product and free product recovery system was subsequently implemented. Certified UST Professional (CUSTP) for project.

SPCC Inspections, Various Locations. Conducted numerous SPCC inspections at oil storage facilities to determine compliance with U.S. EPA Oil Pollution Prevention Regulations (40 CFR Part 112).

First Responders Hazardous Materials Incident Course, EPA, Various Locations, Instructor. Assisted U.S. EPA in presentation of numerous First Responders Courses to public safety and state agency personnel designed to provide basic training for dealing with chemical and hazardous materials incidents.

Acid Precipitation Research Project, Adirondack Mountain State Park Area, New York, Field Team Leader. Conducted extensive fisheries, macroinvertebrate, and water chemistry studies on over 100 ponded waters in upstate New York. Studies included sampling and identification of fish populations using gill netting, trap netting, and electroshocking, collection of surface water samples for water chemistry evaluation, collection of pond and lake sediment

Key Projects (Continued)

samples for the purpose of assessing aquatic macroinvertebrate populations, watershed mapping, and bathymetric mapping. Responsible for overseeing all field operations of assigned team, including training, scheduling, field sampling activities, data compilation, and public relations.