ENVIRON

EPA Region 5 Records Ctr.
299604

LETTER OF TRANSMITTAL

Date: January 28, 2008

To: Matthew Ohl
USEPA Region 5
77 West Jackson Boulevard
Mail Code SR-6J
Chicago, IL 60604

cc: Thomas Krueger – USEPA
Bruce Hamilton – IDEM
Tim Harrison – CH2M HILL
Catherine Schripsema – CH2M HILL
Norman Bernstein – N.W. Bernstein & Associates, LLC
W. C. Blanton – Blackwell Sanders, LLC

Re: Contractor Submittals
ECC, Zionsville, Indiana

In accordance with the Design Report of the Attachment Z-1 Remedy, (Section 6.0 of Revision 2, dated June 2007 with September 2007 and November 2007 revised pages) the contractor submittals listed below are being submitted:

- Spill Control and Contingency Plan, dated 1/8/2008.
- Augmented SVE Trench Construction Plan, dated 1/22/2008.
- Manhole/Vault Specifications, dated 11/29/2007.
- Contractor Quality Control Plan, dated 1/22/2008.
- Grain Size Certification for Free-Draining Trench Backfill Gravel, dated 11/29/2007.
- Geomembrane and Geotextile Material Certification, dated 1/7/2008 and 1/18/2008.

If you have any questions, please contact Stan Popelar at (847) 685-9277.

From: Ronald E. Hutchens/robbie

Project No. 21-6585M

If enclosures are not as noted, please notify us immediately.

740 Waukegan Road, Suite 401, Deerfield, IL 60015 Tel: (847) 444-9200 Fax: (847) 444-9420 www.environcorp.com

Spill Control and Contingency Plan

Spill Control and Countermeasures Plan

ENVIRO-CHEM SUPERFUND SITE
ATTACHMENT Z-1 REMEDY
985 SOUTH U.S. HIGHWAY 421
ZIONSVILLE, INDIANA

Prepared for:

Environ International Corporation
740 Waukegan Road, Suite 401
Deerfield, IL 60015

Submitted by:

HIS Constructors, LLC.
5150 E 65th Street, Suite B
Indianapolis, IN 46220

January 8, 2008

Table of Contents

1.0 Introduction

2.0 Facility Information

- 2.1 Site Location
- 2.2 Facility Description
- 2.3 Stormwater Management
- 2.4 Material Storage

3.0 Plan Review and Record of Amendments [112.5 (a) and (b)]

4.0 Spill Prevention Control and Countermeasures Plan [112.7 (a) and (b)]

5.0 Prevention Measures [112.7 (c) through (e)(i)(i-v)]

6.0 Bulk Storage Tanks/Secondary Containment [112.7(e)(2)(i-xi)]

7.0 Facility Transfer Operations [112.7(e)(i-v)

8.0 Facility Tank Car and Truck Loading/Unloading Operations [112.7(e)(4)(i-iv)]

9.0 Inspections and Record Keeping [112.7(e)(8)]

10.0 Site Security [112.7(e)(9)(i-v)]

11.0 Personnel Training & Briefings and Spill Prevention Procedures [112.7(e)(10)(i-iii)]

12.0 Emergency Contacts [40CFR Part 110]

- 12.1.1 Internal Reporting

13.0 Emergency Procedures/Spill Response

- 13.1 General
- 13.2 Discovery of a Release
- 13.3 Containment of a Release
- 13.4 Spill Cleanup

13.5 Post Clean-up Procedures

13.6 Internal Report

13.7 Communications

13.8 Spill, Fire, and Safety Equipment

13.9 Liaison with Local Authorities

Figures

Figure 1 Site Location Map

List of Appendices

Appendix A SPCC Regulations
Appendix B Notice to Tank Truck Drivers
Appendix C Emergency Personnel and Duties
Appendix D Inspection Record and Incident Report Form
Appendix E Spill, Fire, and Safety Equipment

Spill Prevention Control and Countermeasures Compliance Inspection Plan

In accordance with 40 CFR 112.5(b), a review and evaluation of this SPCC Plan will be conducted at least once every three years. As a result this review and evaluation, HIS Constructors, LLC will amend the SPCC plan within six months of the review to include more effective prevention and control technology if:

- Such technology will significantly reduce the likelihood of a spill event from the facility
- If such technology has been field proven at the time of the review.

Any amendment to the SPCC Plan shall be certified by a Professional Engineer with in six months after a change in the facility design, construction, operation, or maintenance occurs which materially affects the facility's potential for the discharge of oil into or upon the navigable waters of the United States or adjoining shorelines.

Review	Dates	Signatures
1.		
2.		
3.		
4.		
5.		
6.		
7.		
8.		
9.		
10.		

Name of Facility:	**ENVIRO-CHEM Superfund Site**
Type of Facility:	**Superfund Site**
Year of Initial Facility Operation:	**Construction Site – 2007 to 2008**
Location of Facility:	**Zionsville, Indiana**
Name and Address of Owner	**Environ International Corporation** **740 Waukegan Road, Suite 401** **Deerfield, IL 60015**

Designated Person Responsible for SPCC Plan (SPCC Coordinator):

Name: Kieran Hosey
Title: Project Manager
Phone: (317) 509-3235

Assistant SPCC Coordinator:

Name: Fred Arvin
Title: Superintendent
Phone: (317) 695-1734

Management Approval

This SPCC Plan has been reviewed and approved by management at a level with the authority to commit necessary resources for implementing the plan. The programs and procedures outlined in the plan will be implemented and periodically reviewed and updated in accordance with 40 CFR Part 112, as amended, an applicable state and local requirements. HIS Constructors, LLC, is committed to the prevention of discharges of oil to navigable waters and the environment, and maintains the highest standards for spill prevention control and countermeasures through regular review, updating and implementation of this SPCC Plan for ENVIRO-CHEM Super Fund Site.

HIS Constructors, LLC

Signature: Brian Keeney **Date** 1-8-08
Name: Brian Keeney
Title: Ops. Manager

Spill Prevention, Control and

Countermeasures Plan

ENVIRO-CHEM Superfund Site
Zionsville, Indiana

Engineer Certification

I hereby certify that I have examined the facility, and being familiar with the provisions of 40 CFR, Part 112, and attest that this SPCC plan has been prepared in accordance with good engineering practices.

_____
Signature, Registered Professional Engineer

Steve Ahlersmeyer, PE

Printed Name, Registered Professional Engineer

Date 1/8/08 **Registration No.** 19727 **State** INDIANA

Emergency Contacts {40 CFR Part 110}
(See Section 13.0 for Details)

1. **SPCC Coordinator**
   Kieran Hosey
   (317) 509-3235
2. **Assistant SPCC Coordinator**
   Fred Arvin
   (317) 695-1734
3. **Environmental Manager**
   Ralph Hospodarsky
   (317) 695-2992
4. **Zionsville Fire Department**
   911
5. **Boone County Sheriff**
   911
6. **IDEM Emergency 24 hour**
   (888) 233-7745
7. **National Response Center (US Coast Guard)**
   (800) 424-8802
8. **US Environmental Protection Agency Region 5**
   (312) 353-2000
   (800) 621-8431 (24 hours)
9. **Local Hospital Emergency Center**
   Witham Memorial Hospital
   2605 N Lebanon Street
   Lebanon Indiana 46052
   (765) 482-2700

1.0 Introduction

Note: HIS will not be storing fuel onsite in excess of the 1320 gal capacity, and therefore is not required by 40 CFR 112 to implement this SPCC Plan. However, this plan is required by specification section 01065 of the approved Design Specification. The format adapted for this plan follows that used for 40 CFR 112 of the Federal Regulations.

The intention of a Spill Prevention, Control and Countermeasure (SPCC) Plan is to establish the procedures and equipment required to prevent discharge of oil and hazardous substances in quantities that violate applicable water quality standards, cause a sheen upon or discoloration of the surface of navigable water or adjoining shorelines, or causes a sludge or emulsion to be deposited beneath the surface of the water or adjoining shorelines. The Plan also establishes the activities required to mitigate such discharges should they occur. Oil is defined in 40 CFR, Part 112.2 as "oil of any kind or in any form, including, but not limited to petroleum, fuel, oil, sludge, oil refuse, and oil mixed with wastes other than dredged spoil". EPA's SPCC requirements (40 CFR 112.1 through 112.7) apply to non-transportation related fixed facilities that could reasonably be expected to discharge oil into or upon navigable water of the US or adjoining shorelines, and that have: (1) a total underground buried capacity of more than 42,000 gallons, or a total oil storage of more than 1,320 gallons; or an aboveground oil storage capacity more than 660 gallons in a single container.

This SPCC plan has been prepared for HIS pursuant to 40 CFR, Part 112. A copy of the current 40 CFR Part 112 regulations is presented in Appendix A. A complete copy of the SPCC plan shall be maintained at the HIS construction office trailer and be made available to the USEPA Regional Administrator and their agents, upon request, for onsite review during normal business hours.

Employees at the facility shall become familiar with the contents of the plan. The SPCC Coordinator shall be responsible for implementation of emergency spill response activities. In addition, a second full time employee shall be trained to assume the SPCC Coordinator's responsibilities in the Coordinators absence.

This Plan shall be amended whenever there is a change in facility design, construction, operation, or maintenance, which affects the facilities potential for the discharge of oil to navigable waters. This plan must be recertified by a registered PE whenever revised and at a minimum interval of three years.

This plan cover HIS and its authorized subcontractors who will be made familiar with this plan as required during the construction phase of the remedial action work. It is not intended for the facility in general, which may have its own SPCC Plan.

2.0 Facility Information

Note: The facility information in this section is not required by 40CFR part 112. However, it is provided to give an overview of the facility.

2.1 Site Location

The ECC site is located in Boone County, north of Zionsville, Indiana, approximately 10 miles northwest of Indianapolis, in an area that is primarily agricultural but also contains some areas of commercial and industrial land use.

2.2 Facility Description

The ECC site has no current operations and has been inactive since approximately 1983. Between 1987 and 1990, field investigations were performed at the site by Environmental Resources Management-North Central, Inc. (ERM) on behalf of the ECC potential responsible parties, and CH2M Hill. The results of the field investigations showed the primary significant chemical constituents in the soil and water at the ECC site were chlorinated volatile organic compounds (VOC's). Remediation activities, including the excavation of the Southern Concrete Pad area and the installation of the SVE system on the north and central treatment areas were conducted from 1997 through 2000.

2.3 Storm Water Management

The storage tanks onsite will have containment to prevent any spilled material from reaching storm water areas. Also the mobile diesel refueling truck will be placed accordingly to prevent any release of diesel fuel into the storm drainage system. Any potential releases from the mobile truck will also drain towards the Unnamed Creek or adjacent wetlands. In the event of a spill from the truck or tanks, the petroleum product will prevented from reaching a navigable water source (or an area classified as "Waters of the US") and will be retained onsite by use of temporary berms or barriers. Captured petroleum product will be removed by absorbing product using oil absorbent booms and other absorbent materials.

2.4 Material Storage

Mechanical repair, fueling and maintenance of facility equipment takes place onsite at various locations. Various lubricants and fluids are changed on site via a mobile service truck, which delivers and removes all fluids required hydraulically. At no time are fluids drained via gravity to pans or other receptacles. And at no time will fueling or maintenance be performed within 100 feet of unnamed ditch. All spent fluids are removed immediately.

3.0 Plan Review and Records of Amendments {112.5 (a) and (b)}

***112.5 (a) Amendment of SPCC Plan*:**

As set forth in 40 CFR Part 112.5 (a) this SPCC plan shall be amended, if necessary, whenever:

- There is a change in design of the facility, construction, operations, or maintenance, which materially affects the facilities potential for the discharge of regulated material.

Amendments to the plan shall be fully implemented as soon as possible, but no later than six months after the change occurs.

112.5 (b) SPCC Plan Review and Evaluation:

The plan will be reviewed and re-certified at least once every three years. As a result this review and evaluation, the SPCC plan will be amended within 6 months of review to include more effective control and prevention technology if (1) the technology will significantly reduce the likelihood of a spill event from the facility, and (2) the technology has been field proven at the time of the review.

4.0 Spill Prevention Control and Countermeasures Plan {112.7(a)(b)}

112.7(a) Spill History

There have been no significant releases of petroleum products within the last three years at the site.

112.7(b) Potential Spill Predictions, Volumes, Rates, and Control

An inventory of tanker trucks and their contents, capacities, spill containment structure capacities, potential spill predictions, volumes, rates, and control for all fueling areas are listed in Table 4.1

Table 4-1

Spill Containment Capacity Spill Prediction Table

Truck Loading/Unloading Operations and Other Equipment/Storage

Area	Type of Failure	Volume (Gallons)	Rate (gallon/hr)	Direction of Flow	Containment Capacity (gallons)	Integrity/Visual Testing
Tank Truck Loading/Unloading Area	Rupture; piping failure; valve failure	500	500	Varies depending on location of truck	500+	N/A

*See Section 8 and 9 for additional information.

5.0 Prevention Measures {112.7(c) through (e)(i)(i-v)}

5.0 Prevention Measures {112.7(c) through (e)(i)(i-v)}

112.7(c)(1) Drainage Control Diversionary Structures and Containment for Onshore Facilities:

HIS uses a number of preventative systems to appropriately contain petroleum substances, which prevent the accidental discharge of oil from reaching a navigable watercourse. HIS uses an offsite mobile fuel/grease truck containing diesel fuel, engine oil, waste oil, antifreeze and other lubricants inside. The tank truck loading and unloading area drains to the Unnamed Creek.

The constructed features of and management practices for the stationary storage facilities shall be used to minimize the possibility of a release to the environment. Spill control equipment on site shall include granular absorbent, empty drums, brooms, and shovels. Spill equipment is stored on the fuel truck as well as at the stationary tanks.

Portable fire extinguishers are located in the temporary office trailers, pickup trucks, and by the temporary storage tanks. Records are kept on fire extinguishers, spill, and safety equipment in service and regular testing is performed in accordance with established procedures. A list of fire extinguishers, spill, and safety equipment is included in Appendix E.

112.7(c)(2) Drainage Control Diversionary Structures and Containment for Offshore Facilities:

Not Applicable

112.7(d) Impracticability of Constructing Appropriate Containment or Diversionary Structures

All tanks used onsite shall have dual containment, capable of holding the entire tank capacity.

112.7(e)(1)(i) Drainage from diked storage areas:

The drainage from diked storage area will always be plugged off and not allowed for open dumping, until deemed safe to dump onsite. If not able to be dumped onsite the water will be disposed of appropriately.

112.7(e)(1)(ii) Valves used on diked area storage

Not applicable all containment will be plugged off, so no direct dumping will occur.

112.7(e)(1)(iii) Plant drainage systems from undiked areas:

Not applicable. (See Section 2.4 for a discussion on surface water drainage).

112.7(e)(1)(iv) Final Discharge of drainage:

This section is not applicable to this facility.

112.7(e)(1)(v) Facility Drainage Systems and Equipment;

This section is not applicable to this facility. The facility does not treat drainage water as part of their operation.

6.0 Bulk Storage Tanks/Secondary Containment {112.7(e)(2)(i-xi)

112.7(e)(2)(i) Tank Compatibility with its contents:

The mobile fuel/service trucks and temporary tanks are constructed of welded steel in accordance with API Standards 620 and 651 and are compatible with the contents that they hold.

112.7(e)(2)(ii) Diked area construction and containment volume for storage tanks:

The containment will be constructed with welded steel in accordance with API standards 620 and 651 and will hold temporary tank capacity.

112.7(e)(2)(iii) Diked area inspection and drainage of rainwater into storm drain or open watercourse:

The tank dike will be inspected after rain event and water will be drained if water is not contaminated with fuel. If water has presence of fuel the fuel will be absorbed off water and then drained.

112.7(e)(2)(iv) Corrosion Protection of buried metallic storage tank:

This section not applicable, there are no buried tanks at Enviro-Chem Superfund Site for the construction operations by HIS.

112.7(e)(2)(v) Corrosion protection of partially buried metallic tanks:

This section in not applicable, there is no partially buried tanks at Enviro-Chem Superfund Site for the construction operations by HIS.

112.7(e)(2)(vi) aboveground tank periodic integrity testing:

Not applicable: there are not fuel/petroleum aboveground storage tanks.

The mobile fuel/service truck (including drums and temporary storage tanks) containing oil/fuel or hazardous substances will be examined visually to verify the integrity of the truck, drums, and tanks to assess the need for maintenance on a scheduled periodic basis. Such examination will include tires and chassis. The outside of the trucks/drums/tanks will be observed for signs of deterioration; and leaks from seams, rivets, bolts, and gaskets; and accumulation of oil or hazardous substances inside containment structures.

112.7(e)(2)(vii) Control of leakage through internal heating coils:

Not applicable, there are no internal heating coils in any tanks.

112.7(e)(2)(viii) Tank installation fail-safe engineered:

Not applicable, there are no permanent storage tanks.

112.7(e)(2)(ix) Observation of disposal facilities for effluent discharge;

The facility currently has effluent discharge as part of waste water treatment operations. All storm water is discharged into Unnamed Ditch or the surrounding area.

112.7(e)(2)(x) Visible oil leak corrections from tanks seams and gaskets:

Visible oil leaks which result in a loss of oil from truck or tank seams, gaskets, rivets, and bolts will be reported to the Facility Manager and promptly corrected. Any spilled oil will be cleaned up immediately.

112.7(e)(2)(xi) Appropriate position of mobile or portable oil storage tanks:

The mobile fuel/service truck and tanks will not be stored within 100 feet of Unnamed Ditch or the other outfalls within the site.

7.0 Facility Transfer Operations {112.7(e)(3)(i-v)

112.7(e)(3)(i) Buried piping installation protection and examination:

Buried piping on site consists of wastewater transfer piping. All piping will be identified and protected as depicted in Figure C-9, Vehicle Crossover Protection.

112.7(e)(3)(ii) Not in service and standby service terminal connections:

Not applicable. The facility does not have any pipelines not in service, or in standby service.
112.7(e)(3)(iii) Pipe supports design:

Not applicable. The facility does not have any petroleum pipes requiring supports.

112.7(e)(3)(iv) Aboveground valve and pipeline examination:

Aboveground valves and piping at the mobile diesel fuel truck will be examined on a scheduled periodic basis for general condition of items such as supports, flange joints, expansion joints, valve glands, and bodies. Periodic visual inspections will be performed. These inspections will be documented using the forms in Appendix D.

112.7(e)(3)(v) Aboveground piping protection from vehicular traffic:

Not applicable.

8.0 Facility Tank Car and Truck Loading/Unloading Operations {112.7(e)(4)(i-iv)}

112.7(e)(4)(i) Loading/Unloading Procedures meet DOT regulations:

HIS will require drivers to comply with DOT regulations in 49 CFR, Part 177 and facility standard operation procedures.

112.7(e)(4)(ii) Secondary containment for tank truck loading and unloading areas:

All fuel tanks will have secondary containment and will have spill equipment present during loading and unloading in case of a spill event.

112.7(e)(4)(iii) Warning or barrier system for vehicles:

The temporary fuel tanks will have caution tape outlining the protection area for unloading and loading areas. A secondary containment system will be provided with the temporary fuel tanks.

112.7(e)(4)(iv) Vehicles examined for lowermost drainage outlets before leaving:

Tank truck drivers loading and unloading materials at the facility shall adhere to the following guidelines.

- Remain with the vehicle while loading/unloading.
- Drain the loading/unloading lines to the vehicle and close the drain valves before disconnecting lines.
- Inspect the vehicle before departure to verify loading/unloading lines have been disconnected and drain and vent valves are closed.
- Immediately report any leakage or spillage, including quantity, to the SPCC Coordinator.

The instructions listed above are to be documented using the sample notice to tank drivers found in Appendix B.

Oil production facilities 40 CFR 112.7(e)(5) and oil drilling and work over facilities (onshore and offshore) 40 CFR 112.7(e)(6) and (7) are not applicable to ENVIRO-CHEM Superfund Site.

9.0 Inspections and Record Keeping {112.7(e)(8)}

112.7(e)(8) Inspections:

HIS personnel shall inspect the facility for malfunctions, deterioration, operator errors, and discharge, which may be causing, or may lead to, spills of oil and hazardous substances. The inspection shall be conducted often enough to identify problems in time to correct them before a

spill occurs. The SPCC Coordinator or his designee will perform inspections at the ENVIRO-CHEM Superfund Site.

INSPECTIONS

The temporary diesel fuel storage tank shall be visually inspected for the following items on each time the tank is refilled, a minimum of once a week. All onsite equipment will be inspected prior to days use.

- Connections shall be checked for leakage, drainage, tightness, and appropriate capping.
- Piping shall be checked for dripping, loose joints, damage to supports, and pipe deflection.
- Pumps shall be checked for evidence of leakage, proper operation, and damage.
- Evidence of spillage or leakage on ground surfaces.

If a problem is detected during inspection, the SPCC Coordinator shall be notified and the appropriate action initiated.

PERIODIC INSPECTIONS

The temporary diesel fuel storage tank and all onsite equipment will be examined visually for condition and the need for maintenance on a scheduled periodic basis. The outside of the truck, tanks, and drums will be observed for signs of deterioration; leaks from seams, rivets, bolts, and gaskets; and accumulation of oil or hazardous substances inside the truck compartments.

CONTAINMENT STRUCTURES

Secondary containment for will be utilized for the temporary diesel fuel storage tank. The storage tank will be able to contain material equal to the compactly of the tank. Sorbent booms and pads will be readily available at the site.

112.7(e)(8) Inspections Records

Inspections will be documented and a written record of inspection, signed by SPCC Coordinator, will be kept on file. Appendix D contains the form that must be used for recording inspections on a monthly basis. These forms shall be kept on file at the facility or HIS headquarters office for a period of three years.

10.0 Site Inspection {112.7(e)(9)(i-v)}

112.7(e)(9)(i) Fencing:

Site security measures are designed to prevent unauthorized persons from entering the site, to protect the facility and its equipment from possible damage caused by trespassers, and to prevent disruption of facility operations caused by unauthorized site entry.

Unauthorized entry into the site is minimized by controlling access to the facility. "No Trespassing" signs are posted at the site property line.

A gate secures the site entrance during construction hours. Outside operating hours, the gate to the site will be locked.

Entry to the site is restricted to designated personnel and properly identified persons whose entry is authorized by site management. Visitors may be allowed on the construction area only when accompanied by a site representative.

112.7(e)(9)(ii) Fuel Island Dispensers Locked:

Not applicable. The facility does not have Fuel Island Dispensers.

112.7(e)(9)(iii) Starter controls locked

Not applicable. The facility does not have starter controls.

112.7(e)(9)(iv) Pipeline loading/un loading connections securely capped:

Not applicable. The facility does not have inactive transfer pipeline connections.

112.7(e)(9)(v) Lighting Adequate to detect spills:

The fuel truck will only be used during daytime hours. The tanks will be used during daytime hours as well. If needed the appropriate lighting will be onsite prior to fueling any equipment.

11.0 Personnel Training &Briefings and Spill Prevention Procedures {112.7(e)(10)(i-iii)}

112.7(e)(10)(i) Personnel Instructions:

Facility personnel will participate in initial and annual training to allow site personnel to perform their duties in such a way as to prevent the discharge of harmful quantities of oil or hazardous substances. This training will include familiarization with material safety data sheets (MSDS's) appropriate to the job assignment and emergency response procedures, equipment, and systems.

Facility personnel will be instructed annually and at the start of construction as to their responsibilities for compliance with the requirements of the spill laws and emergency response regulations applicable to the facility.

New personnel will be trained within one week after entering the facility. Transient personnel will be advised of applicable spill prevention measures upon entering the facility.

Appropriate facility personnel will be trained annually in spill and emergency response procedures. This training includes reporting, stopping, containing, cleaning up, and disposing of spill materials, emergency communications, etc.

Accurate records will be maintained of personnel emergency response training. Personnel training will be recorded on the form located in Appendix C. Sign In sheets, which include the topics of discussion at each meeting will be maintained for documentation.

Initial training will be conducted by, or under the supervision of the SPCC Coordinator or their designated representative chosen by the General Manager or Environmental Manager. Supervisors may then conduct training for facility workers. Tailgate meetings will be the primary method training.

112.7(e)(10)(ii) Designated Person Accountable for Spill Prevention:

The HIS SPCC Coordinator or his designated representative will be accountable for spill prevention at the ENVIRO-CHEM Superfund Site.

112.7(e)(10)(iii) Spill Prevention Briefings:

Briefings will be scheduled at intervals frequent enough (typically monthly) for facility personnel to assure adequate understanding of the SPCC Plan. The briefing will highlight and describe known spill events or failures, malfunctioning components, recently developed precautionary measures, and a general overview of the requirements of the SPCC plan. Briefing events will be recorded on the personnel training from included in Appendix C.

12.0 Emergency Contacts {40 CFR Part 110}

In the event of an accident or chemical spill at the Facility, the manager with direct responsibility for the day to day construction will contact at least one of the individuals listed below as soon as practical after the incident has occurred. Contact preference is in the order listed. If spill discharge to surface waters is imminent, the regulatory emergency agencies should be notified of the potential immediately as described below.

12.1.1 Internal Reporting

In the event of a spill less than 25 gallons on dry land or in onsite surface water drainage that is contained and recovered, no outside contacts to regulatory authorities are required; however, the following internal contacts shall be made:

- SPCC Coordinator: Kieran Hosey
- Assistant SPCC Coordinator: Fred Arvin
- Environmental Manager: Ralph Hospodarsky
- Project Coordinator: Kieran Hosey

110.10 Reporting to Outside Agencies:

After the SPCC Coordinator (or designee) has been notified, he will conduct reporting to outside agencies, as required.

Releases/Spills to Land, Air, Navigable or Other Waters

If a spill threatens to reach offsite waterway, and the spill cannot be contained and recovered by HIS personnel, then the following contacts shall be made in addition to the ENVIRO-CHEM Landfill Superfund Site Contacts above:

- Zionsville Fire Department 911
- National Response Center (US Coast Guard) (800) 424-8802
- US Environmental Protection Agency Region 5 (312) 353-2000
  (800) 621-8431 (24hours)

Reporting Procedures

- Name, title, telephone number, and address of reporter
- Name, telephone number, and address of facility/Spill
- Time, type, and amount of materials involved
- Extent of injuries/illness, if known
- Possible hazards to human health and environment
- Any body of water involved
- The cause of accident/spill
- The action taken or proposed by the facility/personnel

Other Emergency Contacts

- Witham Memorial Hospital (765) 482-2700

13.0 Emergency Procedures/Spill Response

This section is not required by 40 CFR 112.7, but is included so as to describe the emergency procedures and response of a spill event.

13.1 General

This plan is designed to prevent and control spills of oil and petroleum products. Hazardous chemical spills are not covered under this plan. For chemical spills, refer to the HASP.

EPA regulations define a spill event as the discharge of oil onto, or upon, the navigable waters of the US or adjoining shorelines, in harmful quantities. Harmful quantities are defined as a discharge that violates applicable water quality standards or causes a sheen upon, or discoloration of, the surface of the water or the adjoining shorelines. Contaminated ground water may also have the potential to seep, leach, or flow into navigable water, which would be included in this definition. Storm sewers are considered to fall under the definition of a "navigable waterway" since most storm sewers discharge into a navigable waterway.

An important facet of an effective response procedure during an oil or substance release incident is to keep the material separated from water to minimize migration and the resulting potential increase in human and environmental exposure. Every effort should be made to prevent spills and emphasize substance containment at the source rather than resort to separation of the material from expanded portions of the environment or downstream waters.

13.2 Discovery of a Release

The person discovering a release of material from a container, fuel truck, tank, drum, and operating equipment should initiate the following immediately.

- *Extinguish any sources of ignition.* Until the material is identified as nonflammable and noncombustible, all potential sources of ignition in the area should be removed. Vehicles should be turned off. If ignition source is stationary, attempt to move spilled material away from the ignition source. Avoid sparks and movement creating static electricity.
- *Attempt to stop release at its source.* Assure that no danger to human health exists first. Simple procedures (turning valves, plugging leaks, etc.) may be attempted by the discoverer if there is no health or safety hazard and there is a reasonable certainty of the origin of the leak. All efforts to control leaks must be under the supervision of the SPCC Coordinator or Assistant SPCC Coordinator.
- *Initiate spill notification and reporting procedures.* Reporting the incident immediately to the Supervisor and the SPCC Coordinator. If there is an immediate threat to human life (e.g. a fire in progress or fumes overcoming workers), an immediate alarm should be sounded to evacuate the building, and the fire department should be called. Request the assistance of the Fire Departments hazardous materials response team if an uncontrolled spill has occurred and/or if the spill has migrated beyond the ENVIRO-CHEM Superfund Site boundaries (see section 12) Refer to the Site's Emergency Response Plan.

13.3 Containment of a Release

If material is released outside the containment areas, it is critical that the material is accurately identified and appropriate control measures are taken in the safest possible manner. Consult MSDS file in the office trailer for petroleum products used at the facility. To contain a release, the following procedure should be followed.

- *Attempt to stop the release at the source.* If the source of the release has not been found; if special PPE is necessary to approach the release area; or if assistance is required to stop the release, the fire department should be called to halt the discharge at its source. HIS personnel should be available to guide the fire departments efforts.
- *Contain the material released into the environment.* Following proper safety procedures, the spill should be contained by absorbent materials and dikes using shovels and brooms. A spill kit that includes absorbent materials, containment socks, rags, plastic, and a salvage drum is located on the tool trailer. Consult applicable MSDS's for material compatibility, safety, and environmental precautions.
- *Continue the notification procedure.* Inform the SPCC Coordinator of the release (the coordinator shall perform immediate notification as appropriate). Obtain outside contractors to clean up the spill, if necessary.

13.4 Spill Cleanup

Appropriate PPE and clean up procedures can be found on MSDS's. Care must be taken when cleaning up spills in order to minimize the generation of waste. The HIS Environmental Manager can provide assistance for the issues discussed below. The Environmental Manager must be made aware of all cleanups of spills over 25 gallons.

- Recover or cleanup the material spilled- as much material as possible should be recovered and reuse when appropriate. Material, which cannot be reused, must be declared waste. Liquids absorbed by solid materials shall be shoveled into an open top, 55 gallon drum; or if the size warrants, into a roll off container(s). When drums are filled up after a cleanup, the drum lids shall be secured and the drums shall be appropriately labeled (or relabeled) identifying the substance(s), the date of the spill/cleanup, and the facility name and location. Combining non-compatible materials can cause potentially dangerous chemical and/or physical reactions or may severely limit disposal options. Compatibility information can be found on MSDS's.
- Cleanup of the spill area- surfaces that are contaminated by the release shall be cleaned by the use of appropriate substance or water. Cleanup water must be minimized, contained, and properly disposed. Occasionally, porous materials such as wood, soil, or oil dry may be contaminated; such materials will require special handling for disposal.
- Decontaminate tools and equipment used in cleanup-even if dedicated to cleanup efforts, tools and equipment that have been used must be decontaminated before replacing them in the spill kit.

13.5 Post Cleanup Procedures

- Notification and reports to outside agencies-the SPCC Coordinator shall determine if a reportable spill has occurred (see Section 13.1 and 12). Verbal notifications to government agencies and emergency planning committees shall be executed, if necessary. Where verbal notification is given, a confirming written report shall be sent to the same entity. At this time both verbal and written notification will be given to ECC Trustees and the Trust Engineer.
- Arrange for proper disposal of any waste materials-the waste material from the cleanup must be characterized for contents prior to disposal. The Environmental Manager must approve the disposal outlet. Representative sampling and analysis may be necessary to make this determination. In any case the SPCC Coordinator shall assure that the waste is transported and disposed of in compliance with the applicable laws and regulations. When manifests are needed the SPCC Coordinator shall see that they are prepared and when appropriate returned in the allotted time by the disposal facility.
- Review the contingency and spill plans-management and operating personnel shall review spill response efforts, notification procedures, and cleanup equipment usage to evaluate their adequacy during the episode. Where deficiencies are found the plan shall be revised and amended.

13.6 Internal Reporting

Spills that are regulated per this plan must be documented using the HIS Incident Report form, (See Appendix D). The SPCC Coordinator shall prepare the report. At a minimum the report will document the following items:

- Date, time, and duration of release
- Source and total volume of the release
- Spill cleanup procedures
- Personnel who discovered and/or participated in the spill remediation
- Equipment used during the cleanup
- Waste disposal method
- Unusual events, injuries, or agency inspections

13.7 Communications

In case of a fire, spill, or other emergency, paging systems and two-way radios can be used to contact personnel. Telephones are located in the construction office trailers.

13.8 Spill, Fire, and Safety Equipment

Portable fire extinguishers are located in the office trailers and pickup trucks; the trucks are well marked, easily accessible. Records are kept on fire equipment in service and have regular testing performed in accordance with established good procedures. A list of fire extinguishers spill and safety equipment is included in Appendix E.

13.9 Liaison with Local Authorities

Copies of this plan will be available to the local fire department, police department, and hospital as requested or needed by them. In addition, familiarization sessions will be held with personnel from these organizations, as they feel necessary. It is important that personnel responding to an emergency be familiar with chemicals used, the possibilities for releases of hazardous materials, and the location of the fire equipment such as hydrants, etc.

FIGURE 1

SITE MAP

List of Appendices

Appendix A SPCC Regulations
Appendix B Notice to Tank Truck Drivers
Appendix C Emergency Personnel and Duties
Appendix D Inspection Record and Incident Report Forms
Appendix E Spill, Fire, and Safety Equipment

Appendix A

SPCC Regulations

Appendix B

Notice to Tank Truck Drivers

Notice to Tank Truck Drivers

Tank Truck Drivers

To prevent the release of substances hazardous to the environment, tank truck drivers entering this facility are to comply with the following rules:

- Exercise caution when maneuvering to avoid damage to containment berms
- Inspect fuel truck, fittings, and liquid level indicator prior to filling
- Block truck wheels before starting to unload/load
- Remain with the vehicle while loading/unloading
- Drain loading/unloading line to storage tank
- Verify that drain valves are closed before disconnecting loading/unloading lines
- Inspect vehicle before departure to be sure loading/unloading lines have been disconnected and vent valves are closed
- Immediately report leakage or spillage to the facility Emergency and Spill Coordinator or other management personnel

_____

HIS Constructors, LLC

Appendix C

Emergency Personnel and Duties

Emergency Personnel and Duties

Responsibilities are assigned to individuals by name. Keep in mind, however those responsibilities are designated primarily by position/title/description. If individuals are not available due to vacations, trips, transfers, terminations, etc., the person filling the position automatically assumes the responsibility. Also keep in mind this plan is flexible and personnel must work together to minimize the effects of an emergency.

Management and supervisory persons must review this plan annually to ensure that they are familiar with it. There is no time to do so after the emergency occurs. Direct coordination between persons is encouraged to help eliminate problems.

Suggestions for improvement or modifications should be directed to the SPCC Coordinator for review and inclusion in the next revision. Managers and Supervisors will assist the SPCC Coordinator in training their personnel as necessary and training will be held at least annually.

Individuals are responsible for notifying the SPCC Coordinator of any changes in home or office telephone numbers and position so the call list can be updated regularly and accurately.

SPCC Coordinator	Kieran Hosey	(317) 509-3235
Asst. SPCC Coordinator	Fred Arvin	(317) 695-1734

The SPCC Coordinator will direct and coordinate emergency plan activities and will advise management and company officers as to the extent of the emergency and possible consequences. The SPCC Coordinator will be familiar with environmental control devices and hazard response firms/teams. This person also will be responsible for coordination of first aid to injured persons and will probably be one of the first responders to the emergency.

After the emergency is under control, this person will direct the salvage and restart operations and approve any information release to the news media as applicable. The SPCC Coordinator assures the establishment of liaison and communications as necessary with appropriate agencies and allocates resources necessary to carry out the duties of the plan. They also direct emergency maintenance utility and electrical work to prevent injury and minimize damage to property, product, and the environment. Maintenance personnel are responsible for the safe shutdown of the facility.

Personnel Training and Briefing Record

SPCC Plan

HIS Constructors, LLC

Description of Training_____

Instructor_____ Date_____

Employees Names

Printed Names	Signature

Appendix D

Inspection Record and Incident Report Forms

Incident Report Form

HIS Constructors, LLC
ENVIRO-CHEM Superfund Site

Time problem discovered_____ Date_____

Time problem stopped_____ Date_____

Approximate Location and type of accident (e.g. fire, explosion, and spill)

_____

Material Spilled_____

Approximate amount_____

Extent of Injuries (if any)_____

What damage to people or environment is likely_____

Estimated amount of material recovered_____

What was done with recovered material_____

Action taken to control problem and prevent further problems_____

Signature (Manager)_____

Date_____

Drainage Discharge Report Form

HIS Constructors, LLC
ENVIRO-CHEM Superfund Site

Date_____

Inspector_____

Location _____

Oil Sheen Yes_____ No_____

Foam Yes_____ No_____

Discharge of Storm water Yes_____ No_____

Appearance of water at time pumping or discharge_____

Signature _____

Date_____

Appendix E

Spill, Fire, and Safety Equipment

Spill, Fire, and Safety Equipment List

The following safety equipment is available in order to protect employees and provide containment of contaminants in the event of a spill:

- Spill Control/Containment Materials (stored in tool trailer)
- Drum
- Oil dry (or equivalent)
- Absorbent Socks/Booms
- Shovels
- Brooms
- Drain Pans
- Fire Extinguishers (ABC Universal Extinguishers located on trucks, and trailers)

Augmented SVE Trench Construction Plan

AUGMENTED SVE TRENCH CONSTRUCTION PLAN FOR ATTACHMENT Z-1 REMEDY

ENVIRO-CHEM SUPERFUND SITE
ATTACHMENT Z-1 REMEDY
985 SOUTH U.S. HIGHWAY 421
ZIONSVILLE, INDIANA

Prepared for:

Environ International Corporation
740 Waukegan Road, Suite 401
Deerfield, IL 60015

Submitted by:

HIS Constructors, LLC.
5150 E 65th Street, Suite B
Indianapolis, IN 46220

January 22, 2008

TABLE OF CONTENTS

1.0 DRAFT CONSTRUCTION WORK PLAN 1
1.1 Statement of Commitment 1
1.2 Purpose 1
1.3 Project Objectives 1
1.4 Plan Outline 2
1.5 Mobilization/Site Preparation and Support Activities 2
1.5.1 *Submittals* 2
1.5.2 *Pre-Construction Meeting* 3
1.5.3 *Safety Meeting* 3
1.5.4 *Health & Safety / Air Monitoring* 3
1.5.5 *Mobilization* 5
1.5.6 *Site Preparation* 5
1.5.6.1 *Traffic Control* 5
1.5.6.2 *Designation of Equip. / Vehicle Staging Area / Temporary Utilities* 5
1.5.6.3 *Site Zone Delineation* 6
1.5.6.3.1 *Support Zone* 6
1.5.6.3.2 *Contamination Reduction Zone* 6
1.5.6.3.3 *Exclusion Zone* 7
1.5.6.4 *Site Control Measures* 7
1.5.6.4.1 *Dust Control* 7
1.5.6.4.2 *Noise Control* 8
1.5.6.4.3 *Erosion Control* 8
1.5.6.4.4 *Control of Excavation and Decontamination Water* 8
1.5.6.4.5 *Control of Spillage During Soil Transfer* 9
1.5.6.5 *Clearing & Fence Installation* 10
1.5.6.6 *Site Security* 10
1.5.6.7 *Site Survey* 10
1.5.6.8 *Personnel and Equipment Decontamination Areas* 11
1.5.6.9 *Soil Stockpile & Loadout Area* 11
1.5.6.10 *Existing Sheetpile* 12
1.6 Trench Construction 12
1.6.1 *Responsible Organizations and Contacts* 12
1.6.2 *Trenching Scope of Work* 13
1.6.3 *General Sequence of Trench Operations* 13
1.6.4 *Materials* 14
1.6.5 *Work Platform* 14
1.6.6 *Trench Excavation Equipment* 14
1.6.7 *Bio-Polymer Slurry Mixing Equipment* 14
1.6.8 *Gravel Backfill Placement Equipment* 15
1.6.9 *Trench Excavation Method* 15
1.6.9.1 *Thin Barrier Curtain Wall Consideration* 16
1.6.10 *Evaluation of Trench* 16
1.6.11 *Slurry Preparation and Maintenance* 16
1.6.11.1 *Bio-Polymer Slurry Use* 16
1.6.11.2 *Degradation of BP Slurry* 17
1.6.12 *Backfill Placement* 18
1.6.13 *Slotted SVE Screen and PRGS Conveyance Pipe Installation* 19
1.6.13.1 *Pipe Preparation* 19
1.6.13.2 *Pipe Installation* 19
1.6.14 *Dewatering Well Installation* 20
1.7 Trench Cap 20
1.8 Site Restoration 20
1.9 Water Storage and Disposal 21

TABLE OF CONTENTS (Continued)

1.10 Construction Demobilization 21
1.11 Post-Project Submittals 21
1.12 Trench Quality Control 22
1.12.1 *Quality Control Equipment* 22
1.12.2 *General Sequence of Quality Control Operations* 22
1.12.3 *Test and Sampling Procedures* 22
1.12.4 *Trench Quality Control Forms* 23
1.12.5 *Trench Non-Conformance* 23
1.12.6 *Trench Performance Testing* 23
1.13 Excavation Sloping Requirements 23
1.14 Excavation Safety Procedures and Equipment Requirements 24
1.15 Daily Excavation Progress Reports 24

ATTACHMENTS

Attachment 1 Pipe Weight Design Drawing

APPENDICES

Appendix A Slurry Specialist Resume
Appendix B Trench Quality Control Forms
Appendix C Excavation Progress Report
Appendix D Biopolymer Viscosifier Material Specification

SECTION 1.0 AUGMENTED SVE TRENCH CONSTRUCTION PLAN

HIS Constructors, LLC. (HIS) is pleased to present this Augmented SVE Trench Construction Plan to the Environmental Conservation and Chemical Corporation Site Trust Fund (TRUST). The required services will be for the successful completion of the Attachment Z-1 Remedy at the Enviro-Chem Superfund Site located at 985 South US Highway 421in Zionsville, Indiana.

1.1 Statement of Commitment

HIS will dedicate its company resources to the TRUST in providing quality environmental services with commitment to safety. We are committed to providing effective low cost environmental solutions for our clients that incorporate hands-on involvement and innovative thinking. We are committed to providing the TRUST with the range of resources necessary to provide a safe, cost effective and expedient completion of this project.

1.2 Purpose

The TRUST has a need for the construction of an augmented soil vapor extraction (SVE) trench to be installed by trench method. The trench installation will include excavation under a biopolymer-based viscosifier slurry, backfill with free-draining gravel, installation of high-density polyethylene (HDPE) SVE screen, and permeable reactive gate system (PRGS) piping. The trench will also include dewatering wells, and surface backfill.

The Augmented SVE Trench Construction will be completed in accordance with the contract between HIS and the TRUST, November 14, 2007 (the "Contract") and the Design Report as referenced in the Contract. The Design Report utilized historical information and physical information including soil borings, temporary monitoring well installations, surface water evaluations, and laboratory analysis of various soil, vapor and water samples.

Attachment Z-1 Remedy activities are intended to addressed the concerns of the United States Environmental Protection Agency (USEPA) and Indiana Department of Environmental Management (IDEM).

1.3 Project Objectives

Upon review of the specifications, the site visit, discussions with the oversight engineer, and our experience with similar SVE trenching projects, HIS has identified the following key tasks:

- Prepare and finalize the work plan(s) and submittals for the project.
- Mobilize to the site.
- Identify boundaries of work and trench alignment.
- Install erosion, sediment, storm water and dust controls at perimeter of the work areas, and establish an exclusion zone with a decontamination area and water storage areas.
- Establish office trailer and support facilities.
- Install new SVE trench sections.
- Install a permeable reactive gate.
- Upgrade the existing ECC SVE vacuum system.
- Operate and Maintain the SVE system to achieve cleanup criteria specified in section 1.1.4 of the contract.
- *Perform general site restoration including new fence along eastern property line.*
- Demobilize from site after achievement of all cleanup criteria specified in 1.1.4 of the contract.
- Prepare and submit as-built drawings after completion of construction and a Final Completion Report after cleanup criteria have been achieved.

1.4 Plan Outline

We have structured this plan to be responsive to the TRUST and have addressed the key issues in our Augmented SVE Trench Construction plan as follows:

- **Mobilization/Site Preparation, and Support Activities**
- **Trench Construction**
- **Trench Cap**
- **Site Restoration and Grading**
- **Water Storage and Disposal**
- **Demobilization**
- **Post-Project Submittals**
- **Trench Quality Control**
- **Excavation Sloping Requirements**
- **Excavation Safety Procedures and Equipment Requirements**
- **Daily Excavation Progress Reports**

1.5 Mobilization/Site Preparation and Support Activities

1.5.1 Submittals

Prior to mobilization, HIS will prepare the required submittals for the TRUST review and approval. The submittals will include Insurance Certificates, Bonds, and Plans such as the

Site Specific Health and Safety Plan (HASP), Augmented SVE Trench Construction Plan, as well as the Project Schedule and those submittals listed on the Table found in Section 01010-6.

HIS expects that the pre-construction submittals will take five (5) to ten (10) days after award of contract to complete based upon an expedient review by the TRUST. Additional submittals will be prepared and provided to the TRUST as work progresses.

HIS will also contact any subcontractors or vendors and arrange for delivery of equipment and execute the appropriate subcontractor agreements and shop drawing submittals. Prior to any construction activities commencing, HIS will identify any utilities located on the site by contacting the Indiana One-Call local utility location system.

1.5.2 Pre-Construction Meeting

A pre-construction meeting will be held with HIS and its team members and the TRUST's site personnel to familiarize everyone with the site conditions and the project. The following items will be reviewed during this meeting: Health and Safety Plan, Schedule and other issues specific to the project.

1.5.3 Safety Meeting

As a part of the pre-construction meeting, the Project Specific Health and Safety Plan will be reviewed by HIS and our subcontractors, and a pre-activity site safety meeting will be held. Each person gaining access to the site will be required to verify that they have reviewed and understand the plan with a signature. Emergency procedures will be discussed and outlined at this time. In addition, each person will sign the substance abuse policy as provided within the contract as Attachment #5 and also shown as Appendix F in the HASP.

1.5.4 Health and Safety / Air Monitoring

HIS will address Health and Safety on the site by having a designated Site Health and Safety Officer (SSO). HIS's SSO will also act as the on-site Superintendent. This person will be responsible for monitoring noise, dust, and ensuring proper PPE use and documenting daily weather conditions. HIS's SSO will also perform any ambient excavation air monitoring required by HIS's Health & Safety Plan. Contamination and reduction zones will be established, monitored and maintained by the safety officer.

Daily tailgate meetings will be held to ensure the Health and Safety Plan is being followed, and to review the previous day's events and the upcoming day's schedule. Holding meetings daily will be important in maintaining safety on this site.

Potential emissions from the remedial activities include dust, nuisance odors, and vapors associated with excavation and material handling of impacted soil.

HIS does not expect to provide continuous air monitoring instrumentation at the perimeter of the site, outside the of the exclusion zone, but will visually monitor the excavation area as well as periodically monitor the excavation area perimeter with air monitoring instrumentation. Real-time air monitoring will be conducted to identify if or when additional emission control measures, work practice revisions, or contingency measures need to be implemented. Action levels established for the real-time air monitoring will be used to determine when these work practice revisions and emission control measures are needed and ultimately when work shut-down is required in accordance with the Health & Safety Plan.

In the event that air quality action levels specified in the HASP are reached, based on the real-time air monitoring, the on-site superintendent will be notified immediately and additional real-time monitoring will be performed in accordance with the HASP. Abatement actions will be implemented immediately when any of the real-time monitoring action levels is first exceeded while the additional monitoring is performed in accordance with the HASP. If necessary, excavation or material-handling work may be suspended while the actions are taken. Abatement actions may include:

- Temporarily relocating work to an area with lower emissions.
- Applying water to haul roads and activity areas to suppress dust.
- Applying Rusmar AC-645 long duration VOC-suppressant foam to surfaces of exposed materials.
- Covering stockpiles with tarps or sheeting.
- Slowing the pace of material excavation and handling; or ceasing work and re-assessing the work activities.

If the abatement measures do not reduce emissions below the action levels specified in the HASP when continued monitoring in accordance with the HASP specifies work shutdown, work will be suspended. HIS will evaluate work practices and emission abatement procedures for alteration prior to restarting work.

Real-time air monitoring will be performed at locations downwind of the active work area. A field technician using hand-held monitoring instruments will perform periodic monitoring as remediation activities proceed throughout the workday. The total particulate matter concentrations will be measured using a MiniRam or equivalent. The total volatile organic concentrations will be measured using a PID or equivalent. The real-time sampling equipment will be zeroed prior to each run and operated and maintained in proper working condition according to the manufacturer's specifications.

The real-time monitoring data will be recorded on field data sheets by the field technician. Readings exceeding action levels established for the project will be reported directly to the remediation contractor supervisor. The assessment of the real-time monitoring data to evaluate exceedance of the action levels will be an ongoing daily process during remediation.

1.5.5 Mobilization

Upon approval of the submittals, HIS will mobilize personnel and HIS owned equipment from its office based out of Indianapolis, Indiana. Additional construction equipment will be delivered from local rental companies. The mobilization phase will dovetail into the site preparation phase of the project. Administrative support, exclusion zones, decontamination areas, and staging areas will be identified and established.

1.5.6 Site Preparation

Once the equipment and personnel have mobilized to the site, site preparation will begin. The preparation will consist of the following sub-tasks:

- **Traffic Control**
- **Designation of Equipment and Vehicle Staging Area / Temporary Utilities**
- **Site Zone Delineation**
- **Site Control Measures**
- **Clearing & Fence Installation**
- **Site Security**
- **Site Survey**
- **Personnel and Equipment Decontamination Areas**
- **Soil Stockpile and Loadout Area.**
- **Existing Sheetpile**

1.5.6.1 Traffic Control

HIS recognizes that the site is located within a residential and commercial area. In an effort to minimize disruption, and to provide a safe surrounding, HIS will establish the known points of entry and exit for site personnel and delivery vehicles. HIS will inspect the site gates on a daily basis to ensure proper security and working condition.

1.5.6.2 Designation of Equipment and Vehicle Staging Area / Temporary Utilities

HIS will utilize the pre-construction meeting with the TRUST to designate construction equipment staging areas, mix plant location, load out staging areas, and personal vehicle parking. Only authorized personnel will be allowed to park personnel vehicles in the designated areas. All unauthorized vehicles will be towed without warning and at the owner's expense. Overnight delivery trucks waiting to be off-loaded will be staged at an off-site location and not at the Recycling Center Parking Lot. HIS will install #53 commercial stone within the parking areas, temporary access roads and the laydown area shown on Drawing C-2.

At the completion of the project, the installed #53 stone will be removed and placed along the existing support zone circulation road. An area approximately 75' x 75' will be established for the slurry plant location.

HIS will install a 10'x50' trailer for office resources. HIS will locate the trailer along the support zone fence to utilize the existing power source at the site. An approved electrician will connect electrical service within the trailer area. Electrical service at the decontamination pad will be provided with an appropriately sized diesel or gas powered generator.

Temporary utilities such as phone service will also be established within the contractors designated staging area. HIS's on-site Superintendent will also have a cellular phone for contact and emergency purposes. HIS will obtain water usage from a fire hydrant on-site, an adjacent pond or HIS will arrange to have water delivered to the site. Water will be stored in poly tanks for use at the decontamination pads. HIS will provide a drinking water cooler, a rubbish container and portable toilets within the trailer support area.

1.5.6.3 Site Zone Delineation

Prior to excavation activities beginning, the site will be delineated into the proper safety and work zones. Orange construction fencing or barrier tape will be established as a divider for each delineated area.

Within the actual boundaries of the work site, varying levels of protection will be required in different areas of the site. These levels of protection are determined by the type of activity being performed at a specific location and the potential for exposure at that location. Zones will be identified as the site is set up and these zones will be adjusted as conditions dictate. These zones will consist of:

1.5.6.3.1 Support Zone

This area will consist of the offices, equipment and material staging areas, and break areas. HIS and TRUST personnel will utilize the office trailer staged onsite. Potentially contaminated equipment or materials from the exclusion zone will not be allowed into this area without first going through the Contamination Reduction Zone (CRZ)/Decontamination Area.

1.5.6.3.2 Contamination Reduction Zone (CRZ) And Decontamination Area

These two zones are adjacent to each other and are usually not delineated separately. The CRZ is the zone in which reduction of gross contamination of the equipment will take place. This will include the removal of mud and any material possible prior to entering the actual decontamination area.

The Decontamination Zone is the area in which the actual decontamination of equipment and personnel will take place.

The decontamination (decon) pad has already been constructed on site to contain the various fluids, which will be generated in the interim and final removal of the potentially contaminated material. Upon completion of the decontamination activities, equipment and trucks will be free to exit the decon area and proceed to the support zone.

1.5.6.3.3 Exclusion Zone

The exclusion zone is that area where contaminated/hazardous material may be located and the potential for worker exposure exists. The exclusion zones for the site will be marked with the use of barrier tape or construction fencing. All equipment and personnel exiting the exclusion zone will be required to pass through a single point at the CRZ to the decon area prior to entering the support zone.

1.5.6.4 Site Control Measures

Site control measures detail the methods utilized to control emissions of dust, organic vapors, as well as manage noise, storm water, and other potential contaminant/nuisance emissions associated with the proposed excavation and piping installation. The following will provide details relating to the implemented site controls.

1.5.6.4.1 Dust Control

Prior to remedial activities beginning within the site property. HIS will install a water hookup at a fire hydrant currently located at the site or on an adjacent street. If no hydrant is available HIS will make arrangements with the Recycling Center to obtain water from their on-site pond. If no water arrangement can be made HIS will make arrangements to have water delivered to the site. Dust will be controlled through the use of clean water and material management practices. Dust generated from site activities will be suppressed through watering from the spray bar of an on-site water truck or fire hose. Haul roads will be maintained in a damp condition to eliminate the generation of dust from on-site vehicle traffic. Dust generated from excavation equipment will be controlled through material management practices and/or water mists, if necessary.

On-site transportation vehicles will be loaded via direct placement within the bed of the vehicles, as opposed to dropping the materials into the bed. The use of plastic sheeting over stockpiles will eliminate the generation of dust from stockpiles.

Visual observations of visible dust will be utilized to determine the necessity for dust control measures. The presence of visible dust leaving the work area will be the trigger for dust control measures being implemented.

The previously described dust control measures are also applicable to the control of Organic Vapors. Water sprayed on the soil will reduce the interface between the atmosphere and the organic constituents, thereby reducing the organic compounds ability to volatilize. Additionally, vapor suppression foam can be utilized at the site as an additional dust control measure. HIS will utilize and apply Rusmar AC-645 Long Duration Foam to the face of the excavation or stockpiles whenever evidence of organic volatilization occurs as evidenced by air monitoring procedures described in the HASP.

1.5.6.4.2 Noise Control

Construction projects utilizing heavy equipment can result in higher than normal noise levels. Noise control for this project will be achieved by establishing hours for equipment operation at the site. HIS plans on working ten (10) hours per day, five (5) days per week. HIS's equipment will arrive at the site in good working condition with mufflers and back up alarms on all pieces of equipment.

Each piece of equipment will be maintained throughout the project to ensure that the noise reduction plan is being followed. Safe speed limits will be established to minimize the noise and dust. Also, the use of jake brakes by delivery vehicles will be banned on this project. In addition, delivery hours will be established and every attempt will be made to schedule shipments during normal business hours.

1.5.6.4.3 Erosion Control

Prior to intrusive work beginning at the site, erosion control measures will be implemented. Erosion control will be achieved by establishing silt fence along the eastern edge of the proposed trench alignment, to prevent water run-off from entering the Unnamed Ditch. HIS will also repair or install silt fence along the Southern Support Diversion Channel as shown on Figure C-2.

Additional erosion controls will include the installation of approved, diversion berms and ditches, or check dams if necessary.

1.5.6.4.4 Control of Excavation, Storm and Decontamination Waters

Storm water run-on will be managed by constructing a barrier around open excavations to minimize entry into the excavation of the water created during a rain event. Additionally, plastic sheeting will be used to cover the active trench excavation stockpiles to minimize surface water contact with the impacted soil.

Trench excavation and decontamination waters will be collected and stored in an approved storage container (Frac Tank).

All water transfer lines and storage vessels will be water tight and inspected on a daily basis. Sumps (low points) will be maintained within the excavation and within the equipment decontamination pad. Pumps within these sumps will pump the water to the storage container.

Saturated soil and waste material accumulated within the equipment decontamination pad will be contained within the pad and removed as required to maintain a clean and orderly decontamination facility.

Solid waste materials generated in the equipment decontamination pad will be transported to the active soil trench excavation stockpile area. The waste materials will be mixed with similar materials prior to sampling. Pumps or a skid-mounted vacuum unit will be placed within the areas from which the waters will be generated. Accumulated waters will be pumped from the areas through piping or hoses to the storage containers, or removed via the skid-mounted vacuum unit and off-loaded into the storage container.

It is anticipated that the stored liquids, during construction, will subsequently be transferred to Tank T-2 prior to future treatment and discharge into Unnamed Ditch.

1.5.6.4.5 Control of Spillage During Soil Transfer

Spillage of waste materials will be controlled through the use of competent equipment operators and a liner placed at a location between excavation activities and material loading. A hydraulic excavator or rubber-tired loader will be responsible for the loading of the on-site transportation vehicles. Transportation vehicles will not be lined or tarped. The transport vehicle will be loaded full; however, not to the point of spillage over the sides of the vehicle. Prior to the movement of the transport vehicle the perimeter of the vehicle will be inspected and any visible soil that is adhering to the exterior of the vehicle will be removed.

Additionally, the plastic liner will be inspected and cleaned, to prevent the truck tires from coming into contact with the impacted material. An on-site speed limit of 10 mph will be strictly enforced for all vehicles so that spillage does not occur as a result of rough terrain, excessive speed or wind blowing over the bed of the truck.

All spills will be removed immediately through the use of absorbent pads, oil dry and scraping with heavy equipment.

1.5.6.5 Clearing and Fence Installation

HIS does not anticipate trees or brush having to be removed prior to or during trench excavation activities, but there is a possibility that the trees and brush along the Unnamed Ditch property may be affected during the new fence installation. Installation of the new fence will be completed at the completion of the construction phase and prior to the beginning of the Active Phase of the project. Trees and brush that may interfere with fence installation activities will be removed or trimmed. Cut trees will be stripped of branches and stacked in a staging area. Remaining logs will be cut into manageable sections that are acceptable at the Recycling Center. The material generated from clearing will be stockpiled on site for future load out and disposal at the Recycling Center.

1.5.6.6 Site Security

The inclusion of additional site security beyond the existing perimeter fence has not been included in the bid estimate. HIS employees will remain aware of the surroundings and be on the look out for unauthorized personnel entering the site during the workday. Gates to the site will be left closed during work hours to prevent potential truck traffic to and from the Recycling Center making their way on to the site accidentally.

1.5.6.7 Site Survey

Location control during this project will be accomplished in three steps as follows:

1. For control survey services, HIS will employ, USI Consultants, Inc. (USI), a subcontract surveyor that has previous experience and knowledge of the site and its many features.

   Tasks for the surveyor will include establishment of starting and ending points, corner locations, and line and grade stations at 100 ft intervals. Elevations to be established are those of the trench work platform.

   Upon completion of the trench, USI will be recalled to develop a record drawing of the entire project.
2. For operating layout work that occurs almost daily, HIS will perform survey work using tape measurements from the previously-surveyed monuments installed by the USI survey crew including:

   - Offsets of corner monuments,
   - Intermediate stations, with offsets

- Levels for control of working platform for measuring elevation of the bottom of the trench.
- Level and width of the cap over the trench.

3. For measuring trench depths, the Slurry trench specialist will perform the survey using a sounding cable. These depths will be measured several times each day. The depth of the trench will be measured from the previously-surveyed work platform as follows:

    - Depth to the bottom of the trench after excavation.
    - Depths of the advancing backfill slopes and/or to the bottom of the trench immediately prior to backfilling.
    - Pipe elevations.

1.5.6.8 Personnel and Equipment Decontamination & Spill Contingency Areas

Personnel Protective Equipment (PPE) for this project is expected to be Level D. Site personnel are not expected to come in direct contact with impacted soil. Personnel decontamination, when needed, will be by dry decontamination methods adjacent to the equipment decontamination pad. PPE utilized, (i.e., disposable boot, tyvek, and etc.), will be removed and placed in drums. Hand wash facilities will be provided through the use of a pressurized sprayer and plastic rinse container. Eye wash facilities will also be available at this location.

A personnel and equipment decontamination pad has already been constructed. The decontamination pad will be used to decontaminate equipment prior to leaving the Contamination Reduction Zone (CRZ).

Decontamination water will be transferred to a water storage tank or drum and transferred to Tank T-2 during construction for future treatment and discharge. At this time HIS anticipates that excessive mud or tar build-up will not be a concern since the on-site transport vehicles will be traveling on the existing gravel haul roads, and will not be in contact with the existing moist soil cap. As previously detailed, the transport trucks will be inspected prior to leaving the stockpile area and any soil adhering to the exterior of the truck, including the tires, will be removed. This will prevent the migration of impacted materials from the exclusion zone to non-impacted areas.

Absorbent pads and boom will be maintained and stored at the site for possible spill clean up, and a spill contingency area will be constructed for this phase of work between the treatment building and the decontamination pad.

1.5.6.9 Soil Stockpile and Loadout Area

A soil stockpile and loadout area will be required. Material will be direct placed at the

trench excavation area into a stockpile for each trench segment. Upon receiving the analytical results of the stockpile will determine the disposition of the soil material. The installation of a clean backfill stockpile may be required to facilitate the trench cap installation services at the site.

An impermeable liner will be installed prior to soil being stockpiled adjacent to the trench excavation. It is anticipated that hay bales or an equivalent would be installed around the perimeter of stockpiled materials and a daily impermeable liner would cover the stockpiled soils during non-working hours.

1.5.6.10 Existing Sheetpile

Prior to trench excavation activities beginning, HIS will expose the existing sheetpile previously installed during the Barrier Wall construction. HIS will hydro-excavate along the proposed trench alignment to find the sheetpile. Soils removed during the hydro-excavation will be stockpiled and covered with visqueen. The stockpiled soil will then be tested along with the soils removed from the closest trench segment to determine its final disposition.

Upon encountering the sheetpile, HIS will remove or lower those sections interfering with trench excavation activities. Sheetpile not in the trench alignment will remain and sheetpile removed will not be re-installed. HIS will clean the sheetpile removed and submit the pieces for recycling.

1.6 Trench Construction

This section describes the construction of the augmented SVE trenches utilizing the biopolymer slurry excavation method. The section includes descriptions of equipment, excavation methods, mixing methods, slurry usage, piping installation, and stone backfill placement. This section provides a description of material, quality control (QC) equipment, tests, sampling, and QC forms as per Specification Section 02210. Since all trench segments will be handled virtually in the same manner, we have not addressed the physical remediation of each separate segment area as shown on the Figures presented in the Project Drawings.

The objective of this section is to provide the TRUST with a description of work methods, general sequence and layout of operations for the trench construction. In addition, this section provides the construction team with a guide for measuring performance, controlling quality and documenting the work.

1.6.1 Responsible Organizations and Contacts

HIS is the general contractor for this project. The HIS project manager is Kieran Hosey. Geo-Solutions, Inc. (GSI) is under subcontract to HIS to share in the contract activities described in this submittal. GSI is a firm specializing in providing on-site technical services and specialty

equipment for slurry trench construction. HIS will provide engineering, labor, standard construction equipment, and overall supervision for the trench construction. GSI will report to the HIS Project Manager.
GSI will serve as the slurry trench subcontractor. The staff of GSI have designed, constructed and supervised over 500 slurry walls of all types for a combined total of more than 100 years. Specially, the staff of GSI has supervised the construction of more than 60 biopolymer trench installations. GSI will provide supervision, quality control and specialty equipment for the construction. Key contact at GSI is Mr. Bob Schindler at 412-825-5165. Mr. Schindler will serve as the GSI Project Manager.

Mr. Keith Kilpatrick of GSI will serve as the on-site slurry trench specialist. The slurry trench specialist's resume is provided in Appendix A. Mr. Kilpatrick has been engaged in the construction of slurry walls for more than 20 years. His experience includes successful management and supervision of slurry trench construction including the methods for: controlling, mixing, placing, cleaning and maintaining slurry; supervising alignment, verticality, and depth of slurry trenching; controlling blending, mixing, and placement of slurry wall backfill; and a thorough knowledge of slurry trench construction equipment and material testing. If Mr. Kilpatrick is not available for reasons beyond the control of GSI, other personnel with suitable qualifications will be submitted for approval.

1.6.2 Trenching Scope of Work

The scope of trench activities includes the planning, construction, and testing of 7 trench segments as part of an augmented SVE system. The segments total 978 linear feet, 2 feet wide, and up to 14 feet deep. The trenches will be constructed by the biopolymer (BP) slurry trench method and backfilled with a gravel and pipe.

1.6.3 General Sequence of Trench Operations

Slurry trench construction relies upon an excavator digging the trench, a slurry mixing plant located at the staging area, and an earthen working platform alongside the trench for staging and installation of the materials that are subsequently placed in the trench. The slurry trench construction generally consists of three major operations, all executed simultaneously and coordinated with each other. The first is slurry mixing. Slurry mixing in this case will be accomplished with a slurry mixer furnished by Geo-Solutions. This mixer consists of a colloidal mixer, re-circulation pump and storage tanks. Slurry will be prepared from biopolymer and water and then pumped to the trench heading through lay-flat hose, as required.

The second operation is excavation. This is accomplished with a hydraulic excavator capable of reaching the design depths. It is our intent to keep the backfill operation as close as possible to the excavation at all times.

The third operation is the backfilling operation. The backfilling operation will consist of pipe

and gravel backfill placement. As the trench is excavated, the soil will be staged on visqueen adjacent to the mixing platform, away from the work or placed directly in an on-site transport vehicle to be hauled to a central spoils staging area.
Once approximately 50 linear feet of trench has been excavated, pipe installation will be initiated, followed directly by backfill stone placement.

1.6.4 Materials

The basic materials for construction include: water for slurry, biopolymer (a mixture of guar gum and preservatives), pipe, and backfill gravel. A critical resource for slurry trenching is water for slurry mixing. As described previously, water is being provided from an on-site location via a water truck. Water will be delivered to the batch plant area via hose or piping. Water usage is expected to peak at 50,000 gallon per day. Water will be piped to the slurry mixing plant where the biopolymer ingredients are added, and then pumped to the trench

Guar materials are being provided in 100 # sacks and/or 5 gallon pales. Pipe will be delivered in 40-foot lengths from the distributor Forrer Supply. Backfill stone will be provided by HIS from a local quarry operated by Martin Marietta and it will be trucked to the site in on-road dump trucks.

1.6.5 Work Platform

Based on the trench locations, the existing ground surface will be used as the working platform. Some minor grading may be required to provide a flat, level, and stable working surface. Any buried or overhead utilities that interfere with the trench construction will be temporarily removed from service or rerouted during construction. Abandoned pipes will be plugged to avoid filling with slurry and backfill.

1.6.6 Trench Excavation Equipment

The slurry trench will be excavated with a Caterpillar 330 excavator or equivalent. The excavator has the capability to excavate at least twenty- feet (20') deep. The excavator will be equipped with a 2-foot wide bucket. If necessary due to working pad conditions, the excavator will be supported on wooden mats when working or traveling.

When construction equipment is not in use it will be moved away from potential hazards, locked and secured. All keys and devices required to engage equipment will be locked in the construction office trailer or removed from the project site at the end of the work shift. Heavy equipment will be maintained on site by HIS's mechanic. The local heavy construction rental equipment vendor will provide additional maintenance service.

1.6.7 Bio-Polymer Slurry Mixing Equipment

The BP slurry will be mixed in a 2.5 CY digester and a frac tank. Ingredients are added in

both the mixer and the frac tank. The tank is continually agitated with a re-circulating pump during working hours. The mixing operation is supported by a forklift for handling ingredients and operated by one worker.

1.6.8 Gravel Backfill Placement Equipment

The backfill gravel will be placed with a front-end loader or an equivalent piece of equipment with acceptable bucket size and reach. A bucket size of 2-4 CY will be used for backfill placement.

1.6.9 Trench Excavation Method

The trench will be excavated under slurry with a hydraulic excavator. The standard procedure for excavation is as follows:

Begin a new excavation on the centerline by digging a trench less than 4 feet deep and about 15 to 20 feet long (a.k.a. one "panel" or "cut") without slurry. A small earthen dike is left between the previously completed slurry-filled panel and the new, dry panel. The dry soil from the excavation is used to create berms around the work area as needed. Providing the trench sidewalls are stable, this initial dry cut can be taken deeper, allowing spoils to be recovered in a dry condition. Should sidewalls appear unstable at any time at the discretion of the slurry specialist, the cut will be filled with slurry.

Introduce slurry into the excavation by removing the small earthen dike, or by pumping in fresh slurry. Continue the excavation to depth and remove the soil between the newly excavated trench (new "panel") and the previous trench (previous "panel") so that the trench is continuous. Excavate by removing soil in layers from the bottom of the excavation. Remove any loose soil on either side at the surface of the trench for at least 3 ft laterally in both directions to minimize material that may fall into the trench.

At a minimum, excavate to the elevations as shown on the plan drawings. Excavation will not exceed 0.3 feet greater in depth than indicated in the Design Report. Sound the final depth and record.

Clean the bottom of the excavation by repeated passes of the bucket along the bottom of the trench. When no more loose materials are removed, place the bucket on the bottom of the trench in an open position in the previous panel. Using only the excavator tracks, move the excavator backward scraping the bucket along the bottom of the new panel. Remove the bucket and if a minimal amount of loose materials are in the bucket proceed to the next new panel or repeat as necessary until the bottom of the trench is cleaned. Sound the final depth of the trench at least every 10 lineal feet. Note any significant loose materials on the bottom and re-clean the bottom as necessary.

1.6.9.1 Thin Barrier Curtain Wall Consideration

To avoid any damage to the Thin Barrier Curtain Wall the following steps will be taken during installation of the SVE trench. A surveyed mark out of the Thin Barrier Curtain Wall will be conducted prior to any trenching activities. The trench will begin 4 feet from these marks, making the center line of the trench 5 feet from the Thin Barrier Curtain Wall. As an added precaution, HIS will unearth the geotextile that separates the Thin Barrier Curtain Wall from the native fill that was used to cap the top 2 feet. This will be done by scraping the top 1 foot of material above the Thin Barrier Curtain Wall with an excavator and hand digging the additional foot until the geotextile has been identified. The excavator will scrape a maximum of 6 inches in a pass. If the geotextile is not unearthed within the top 2 feet of material, the location will be backfilled and a new location will be selected.

1.6.10 Evaluation of Trench

The success of the above measures will be evaluated by the slurry trench specialist and HIS project manager on a daily basis. Trench measurements will be used to prepare a computer-generated profile of the slurry-filled trench and backfill. Any areas of obvious concern will be re-cleaned, as needed.

1.6.11 Slurry Preparation and Maintenance

The BP slurry will be mixed in a digester. Mixing is accomplished by adding dry powder from bags and/or in liquid form from 5-gallon pales to high-velocity water in the mixer. With the slurries, the discharge from the mixer will be directed to the storage tank for additional mixing and hydration. Circulation is maintained with a separate pump and a distribution system.

1.6.11.1 Bio-Polymer Slurry Use

Biopolymer slurry will be used for supporting the trench walls and degraded after trenching. BP slurry will be made by batch mixing. The BP slurry is sampled from the tank circulation system and tested as required. In general, viscosity and pH are the quickest and most usable indicators of workability and quality, so frequent tests of viscosity and pH will be conducted. Marsh Funnel Tests will be used to test viscosity. Tests of the BP slurry will be conducted a minimum of twice daily. If the fresh slurry does not comply with the specification, more guar gum, additives or a longer mixing time will be employed, additional testing will be conducted to ensure that slurry complies with specifications.

The procedure to be employed when mixing fresh slurry will be as follows:

Adjust flow of water through mixer for maximum mixing efficiency.
Pour guar gum powder from bags and/or liquid guar from 5-gallon pales into mixer.
Adjust flow of guar gum for maximum mixing efficiency.
Pump slurry to storage tank.
Obtain sample of slurry from storage tank.
Test slurry: Marsh Funnel and pH tests.
Add preservatives and adjust slurry properties, as necessary.
Retest slurry.
Sample and test slurry from storage tank.

Slurry will improve with continued time, mixing, and hydration. Generally, a batch of BP slurry reaches optimum properties in 20 to 60 minutes.

The in-trench slurry will be sampled from the trench and tested at a minimum of twice daily. Sampling from the top and/or mid-depth or surface of the trench usually provides the most representative samples. A Marsh Funnel test and pH test will be used as indicators of workability and stability. If the in-trench slurry does not comply with the specifications adjustments will be made to the additives in fresh slurry and fresh slurry will be introduced into the trench. When necessary, additives will be introduced directly into the trench and mix with excavator.

1.6.11.2 Degradation of BP Slurry

At the completion of the trench installation, or portions thereof, there will be excess BP slurry in the trench and within the pore space of the gravel backfill material. In order to re-establish the permeability of the surrounding soils and to permit groundwater to flow into and through the trench, it is necessary to breakdown the BP slurry. The slurry breakdown process will be completed by circulating the slurry/water in the trench. If further modification is required to reduce the BOD to less than 1,000 mg per liter, the trench will be pumped to the existing treatment system.

The breakdown of the BP slurry is accomplished by; 1) breaking down the polymer slurry to simple carbohydrates (sugars), and 2) encouraging native soil microbes to consume the carbohydrates, 3) polishing. There are steps that are taken to ensure breakdown of the BP slurry and these are described below.

Pumps are set up to withdraw slurry from the temporary wells and discharge the slurry over the surface of the backfill. The set up of the pump permits circulating slurry from the well over the backfill and back to the well. The opposite circulation direction (from slurry into well) may be equally as effective. Each well is pumped in turn and multiple pumps may be used. The wells are typically placed at 50 to 100 foot spacing.

The pH of the slurry is adjusted to match the optimum range of the enzyme breaker. Controlled amounts of muriatic acid or lime or soda ash may be added to the slurry for pH adjustment. Additives are diluted with water or slurry prior to adding to the trench while continuously pumping.

After the pH of the slurry is satisfactory, the liquid enzyme breaker is added while continuing to circulate the slurry. Enzyme breaker is added at a rate necessary to break the slurry based on the slurry specialist's observations, but generally in the range of 1-gallon enzyme breaker per 4,000 to 20,000 gallons slurry.

A bio-starter may be added to help initiate microbe activity. The bio-starter is a mixture of natural materials, e.g. peat moss, compost, etc, added to introduce beneficial natural microbes.

The above measures are generally adequate to break the slurry. A Marsh Funnel Viscosity < 30 seconds indicates the slurry is broken. Also, the BOD will be reduced to 1,000 mg per liter or less.

In some cases polishing is performed using hydrogen peroxide as an aid in breaking the slurry. Peroxide is added while circulating slurry at the rate of up to 500 ppm.

The pumping and re-circulation continues until a minimum of 2 pore volumes of the trench is circulated to flush and develop the trench.

The degraded slurry should show greatly reduced turbidity, but may retain some "sticky feel", which will be later consumed by natural microbes. Cold weather, variable groundwater pH, and sterile conditions may reduce the efficiency of the slurry breakdown.

1.6.12 Backfill Placement

Following excavation of approximately 30 feet of trench to design depth, the backfill stone will then placed. This will be accomplished by simply dropping the stone into the trench from the material handling equipment (typically a front-end loader bucket). Backfill placement will continue until it is placed to the invert elevation of the slotted SVE screen and/or the PRGS

conveyance pipe. The pipe will then placed as described below in section 2.6.12. Once the screen is installed, backfill stone placement then resumes until it is brought up to within 2 feet of the work pad surface.

1.6.13 Slotted SVE Screen and PRGS Conveyance Pipe Installation

Following the placement of backfill gravel to the design invert elevation of the PRGS conveyance pipe or SVE screen, pipe installation will begin. The pipe installation is comprised of pipe preparation and installation.

1.6.13.1 Pipe Preparation

Pipe preparation is comprised of the following steps:

- 40-foot sections of 4" HDPE pipe are fusion welded together, including cleanouts and risers at the correct locations, to form a continuous run of pipe. Pipe is staged adjacent to the trench.
- Pre-fabricated concrete weights are then attached around the pipe using all thread or similar. Weights are to be attached on approximately 15-foot spacing.
- Cables are then attached to the pipe weights. The cables are cut to the appropriate length to allow the pipe to descend to the invert elevation. See Attachment 1, Pipe Weight Design Drawing.

1.6.13.2 Pipe Installation

Pipe installation is as follows:

- In trench segments that have both PRGS conveyance pipe and SVE pipe, backfill gravel is placed to the pipe invert elevation of the PRGS conveyance pipe. The PRGS conveyance pipe is the lower pipe and SVE will be above it with spacers installed between to maintain required spacing. In segments that require only SVE pipe, the backfill is placed to the invert elevation of the SVE pipe.
- The pipe (or both pipes where required) is placed into the trench with a forklift or other lifting device.
- A 4"x4" lumber is slid through a loop at the top of the cables. The 4"x4" is placed to span across the trench. The pipe is then suspended by the cables.
- Each section of cable will be measured above grade to ensure that proper elevation is met for each segment. This will be confirmed by HIS S.C.Q. Manager and GSI project manager and documented.
- The pipe is verified to be at the proper invert elevation by assuring that the cables are taught when the pipe is laid into the trench. In addition a known length of cable will be added around the pipe, with a marker point above grade. This marker point will be "shot" using a level from a benchmark onsite with a known

elevation. The process of using a known elevation to confirm the invert elevation of the pipe(s) will be carried out at a minimum of every 15 feet and where the PRGS conveyance and SVE pipes enter each manhole and as the PRGS conveyance pipe exits each manhole.

- Backfill material is to be carefully placed into the trench, bedding the pipe(s) in place.
- This process is to be repeated as trench construction progresses.

1.6.14 Dewatering Well Installation

The dewatering wells, including the temporary wells installed for trench development, will be installed directly into the trench prior to backfill stone placement. Weight, if/as needed, will be attached to the wells to overcome the buoyancy of the biopolymer slurry. The permanent wells will be checked for verticality prior to and during backfill stone placement.

1.7 Trench Cap

After the trench is backfilled to with two-feet (2') of the proposed surface, the trench will be capped. Capping activities include placing the geotextile, geomembrane, and compacted trench cover, and removing excess backfill and soil materials. Any excess materials will hauled to a stockpile after analytical results determine its final disposition.

Standing water within the trench will be removed via pumping or vacuum, as is practical/possible, prior to the placement of clean backfill. In addition, a non-woven geotextile followed by a geomembrane will be placed above the gravel, extending to the widest portion of the trench. The pieces of geotextile and geomembrane along the trench length will be overlapped a minimum of three-feet. Sewing of the geotextile or seaming of the geomembrane will not be required.

Imported clayey backfill of the trench cap will conform to the requirements set forth in the Contract Documents for clean backfill. The required acceptance testing and geotechnical testing will be performed on the clean fill material. Backfill will be delivered to the excavation via off-site delivery vehicles that will follow a pre-determined on-site haul route adjacent to the immediate trench segment area being backfilled.

A bulldozer, or equivalent, will be used to place the material into the trench in loose 8-inch to 12-inch lifts. The excavations will be backfilled from the "bottom up" in continuous horizontal lifts and placed as required to achieve the final design grade in a manner that will promote positive surface drainage away from the area. HIS assumes the clayey fill will be placed in at least three lifts. A sheepsfoot roller or smooth vibratory roller will suffice for compaction standards on the lifts. The clayey backfill will be compacted to 95% Standard compaction as determined by the soil proctor.

1.8 Site Restoration

Once it has been determined that trenching activities are complete and the site has been finish graded to the proper elevation, HIS will install the final surface restoration. This may include an aggregate, surface, or appropriate seeding. At two locations, at least 6 inches of #53 stone will be placed and compacted at the surface for a roadway crossing. Graded areas will be made to blend with remaining ground surfaces. Once restoration activities are complete, temporarily relocated structures will be returned to their original condition. In addition HIS will construct an eight-foot (8') tall fence along the eastern edge of the property line.

1.9 Water Storage & Disposal

The wastewater storage area will be located in and around Tank T-2. All water that comes in contact with exposed waste will be conveyed to the primary containment storage tank for gravity settlement of solids. The primary component of the wastewater storage system will include a 150,000-gallon storage container for wastewater storage and surge capacity. Solids accumulating in the settling tank may be transferred to the soil stockpile area after suitable dewatering and drainage.

Pumps or a skid-mounted vacuum unit will be placed within the areas from which the waters will be generated. Accumulated waters will be pumped from the areas through piping or hoses to Tank T-2, or removed via the skid-mounted vacuum unit and off-loaded into Tank T-2. It is anticipated that the liquids will not need filtration and treatment to remove the suspended particles prior to storage of the water. A visual inspection of the accumulated water, for suspended particles, will take place before water is transferred to Tank T-2 to ensure the treatment plant is not damaged.

Prior to off-site discharge to Unnamed Ditch, stored water will be treated in the on-site treatment system and delivered into Tank T-4 for subsequent analytical testing per the requirements of the Specifications. Upon acceptance of the treated material, the water will be discharged into Unnamed Ditch.

1.10 Construction Demobilization

Once restoration and grading activities are complete, HIS will make a final walkthrough with the TRUST's engineer. Any discrepancies will be addressed at this time prior to demobilization of personnel and equipment.

Upon completion of the punch list, HIS will demobilize its construction personnel and equipment from the site and begin continuative operation of the SVE system to achieve the cleanup criteria specified in section 1.1.4 of the Contract. As built drawings will be provided after completion of construction in accordance with Design Report and the Contract.

1.11 Post-Project Submittals

Upon completion of site activities, HIS will submit to the owner those project documents necessary to

complete the project. These documents may include final lien waivers, bill-of-lading copies, weight ticket receipts, and final completion report.

1.12 Trench Quality Control

1.12.1 Quality Control Equipment

The following equipment will be employed in measuring, testing and sampling the slurry trench materials at the site:

No. Units	Equipment	Test	Standard Method
1	Marsh Funnel & Cup	Viscosity	API RP 13B
1	Mud balance	Density	API RP 13B
2	Weighted Tape Measure	Trench Depth	None

1.12.2 General Sequence of Quality Control Operations

The typical day of QC activities performed each morning and afternoon include:

Sound bottom of trench, compare to previous day's sounding.
Test fresh and in-trench slurry.
Inspect backfill placement.
Inspect pipe and dewatering well installation.
Observe trench excavation measurements.

The next morning's activities are included for comparison with the previous day's results as follows:

Sound trench and backfill. Compare with previous afternoon's soundings.
Complete QC forms and submit to QC supervisor.
Continue with daily inspections.

1.12.3 Test and Sampling Procedures

Standards for testing and sampling procedures are listed in the table above. Additional details are given below.

Sounding Instrument – The sounding instrument (a.k.a. sounding cable) consists of a fiberglass surveyor's tape with a heavy metal weight attached. The weight hangs below the tape when measuring, and the length of the weight is subtracted (or the end of the tape is modified) from the measurement to give a true reading. Several designs for the weight are

available. The sounding cable is used to measure the depth of the trench. In order to obtain the elevation of the bottom of the trench, the work platform is surveyed and the depth from the work platform is subtracted from the elevation of the work platform.

Slurry Sampling – Sampling shall use either of two methods. The most common method is to remove slurry by dipping the backhoe bucket through a zone in the trench. This method requires the operator to trap the slurry with a rapid action and may not be successful at all depths. The alternate method is to use a rope-type slurry bailer. Slurry bailers are custom-made and can obtain about one quart per sample.

1.12.4 Trench Quality Control Forms

Copies of QC forms are included in Appendix B. These forms are completed daily, maintained on-site, and presented to the QC supervisor the following day. A computer-generated cross-section of the trench and backfill is produced from the BACKFILL SLOPE data. The forms and data are maintained on-site in hard copy and on a laptop computer.

1.12.5Trench Non-Conformance

During the course of almost every construction project, there will be occurrences, observations, measurements, etc. that indicate anticipated conditions or intended designs are not quite what is actually seen or what is actually accomplished. These "non-conformances" can consist of either non-conforming site conditions that are discovered during the work, as well as non-conforming methods, materials, or installation quality that are observed by the inspectors or supervisors.

1.12.6 Trench Performance Testing

Upon completion of each trench segment, before the trench cap is installed, the BP slurry break down process will begin followed by development and flushing. This process will take place concurrently with trenching additional segments. Once the BP slurry breakdown process has been completed the performance test will be conducted. The performance test will be conducted by pumping from the dewatering well at a rate of 5 gallons per minute until the trench is dewatered.

1.13 Excavation Sloping Requirements

Workers are not anticipated to enter any open excavations. All work associated with intrusive activities will be accomplished using the excavators. The primary concern with excavation sloping requirements will be that of sidewall stability and maintaining a safe excavation for the ground personnel working adjacent to the excavation.

As the excavation progresses vertically, excavation sidewall slope monitoring will be accomplished concurrently with the active excavation. Should sidewalls appear unstable at any time at the discretion

of the slurry specialist, the cut will be filled with slurry. HIS does not anticipate on decontaminating the excavator bucket prior to removing clean overburden soils after each trench segment is completed. Excavated trench spoils will be stockpiled adjacent to the excavations a minimum of four (4) feet back from the edge of the trench. Stockpile erosion controls (straw bales, berms, silt fence) will be implemented, as necessary, to control clean sediments from washing back into the trench. The use of an excavation support system will not be necessary.

1.14 Excavation Safety Procedures and Equipment Requirements

Personal safety is the primary concern for any operation on-site. At a minimum, the following procedures and equipment will be utilized:

- The site will be divided into three zones. The exclusion zone, contamination reduction zone and the support zone. No one except OSHA, 40 hour trained personnel will be permitted inside the exclusion zones. All personnel must check in with the excavation supervisor prior to entering or leaving the exclusion zone.

- All open excavations will be marked with caution tape, construction fencing or rope.

- Excavation sidewalls will be cut back to a 1H: 1V slope, or to the angle of repose at which the soil will remain stable and at rest. (Areas other than augmented SVE trench)

- Excavation sidewalls will be inspected daily by a certified Competent Person for structural stability. If the possibility of a cave-in or slide exists, all employees will exit the immediate area until corrective measures have been taken, such as removing the unstable soil, increasing the angle of the cut back, or installing a support system.

- No employees are anticipated to be required to enter the excavations. All subsurface excavation and sampling work will be performed with an excavator. In the event it becomes necessary for an employee to enter the excavation all the requirements contained in 29 CFR Subpart P 1926.65, 1926.651 and 1926.652 OSHA Safety and Health for Constructions will be satisfied.

- Stockpiles constructed adjacent to the excavation will be held a minimum of four (4) feet from the edge of the excavation.

- All loose materials and soils will be removed from the heavy equipment before it moves to the next trench segment. All heavy equipment will be washed and decontaminated before it leaves the site.

1.15 Daily Excavation Progress Reports

The HIS Superintendent will generate and distribute an Excavation Progress Report on a daily basis. The report will include the names and classification of on-site HIS personnel and subcontractors. This report will also provide a summary of equipment or material deliveries, the days activities, the limits

of the excavation area, the status of related construction and water control). Summary information will include a summary of challenges or changed site conditions encountered, corrective measures implemented to address previous challenges or conditions.

See Appendix C for a sample Excavation Progress Report.

ATTACHMENT 1

PIPE WEIGHT DESIGN DRAWING

GEO-SOLUTIONS

PIPE WEIGHT DESIGN

ZIONSVILLE, IN PROJECT

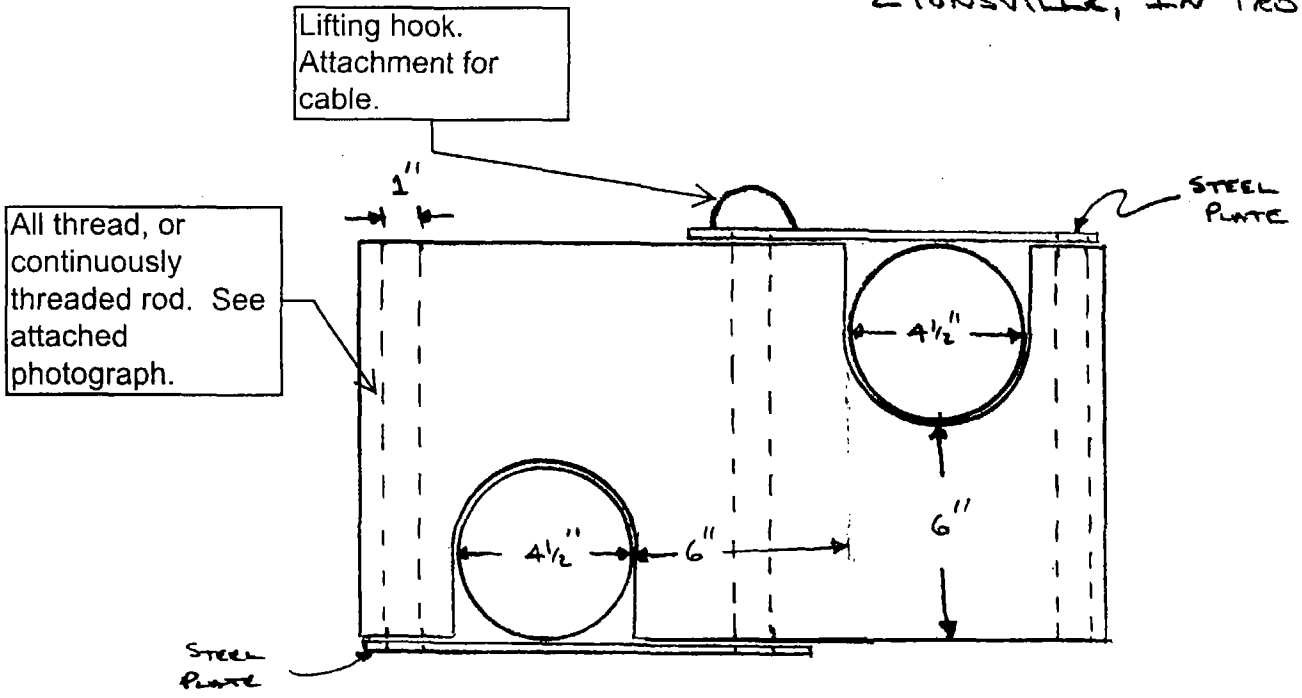

* Reinforce as Needed

AMPAD 22-141 50 SHEETS 22-142 100 SHEETS 22-144 200 SHEETS

APPENDIX A

SLURRY SPECIALIST RESUME

R. Keith Kilpatrick
Slurry Specialist

INTRODUCTION

Mr. Kilpatrick has had a long career in construction, management and quality control. For the last twenty years, he has worked in the construction field, with the last ten years being involved in slurry wall construction. He has worked for specialty contractors where he served as field manager and operator for slurry wall and soil mixing projects.

CREDENTIALS

Education
Mississippi Gulf Coast Junior College 1976-1978
Hazwoper Course 40 hours plus annual updates

Experience Synopsis
Mr. Kilpatrick has in excess of 20 years experience in construction management and site operations. A significant portion of his experience has related to specialty environmental and geotechnical construction. His background includes multiple projects in each of the following areas:

Slurry cut-off walls	Bio-polymer slurry trench drains
Reactive Barrier Walls	In situ Soil Mixing

His initial work with in the specialty construction industry began as an operator and progressed to on-site foreman, then project manager, and now as Slurry Specialist. He previously has worked for the firms of Geo-Con, DD-M and ECC in the specialty construction field. He is computer-literate and *produces field reports on a personal computer.*

PROJECT EXPERIENCE (Selected Examples)

Riverview, MI (2007) – Supervisor for the construction of a 13,000 CY soil-cement-bentonite barrier. The barrier was installed in the Detroit River as part of a composite sheet pile and soil-cement-bentonite barrier wall. The SCB material was remote mixed, hauled to the river's edge, and placed on the landside of the sheet pile wall with a crane. The performance criteria of the SCB included permeability and unconfined compressive strength.

Brisbane Australia (2007)—On site supervisor and slurry specialist for 2000 ft long, 50 ft deep slurry wall with embedded plastic panels. The wall was to create a barrier against water and air inflow into a site during a vacuum consolidation program.

Marysville CA (2006)—On site supervisor and slurry specialist for approximately 300,000 sf of 70 ft deep SCB slurry wall. This wall was installed through a degraded levee to improve its foundation to stop underseepage during flood events.

Nyack, NY (2006) - Former MGP Site – On-Site Supervisor and SSM operator on this site where SSM was used to stabilize 2,500 CY of impacted soil. Both 5 and 8-foot diameter columns were installed to bedrock at depths ranging from 10 to 20 feet below ground surface. Treatment criteria included UCS and permeability.

Tiskilwa, IL (2005) - On-Site Supervisor and SSM operator on this project where in-situ stabilization was used to improve the strength of the backfill soil that was placed around 20 newly installed wind turbines. After the turbines were initially installed, unacceptable movement occurred at one of the turbines. Further investigation determined that the backfill material around 20 turbine foundations was unacceptable. The most cost effective means of remediating the backfill was to utilize soil mixing. A cement grout was mixed with the existing backfill soil, with cured unconfined compressive strengths greater than 250 psi. Soil mix depths ranged from 15 to 29 feet below ground surface.

Lynn, MA (2005) – On-Site Supervisor for the construction of this 4,500 sf cement-bentonite slurry wall. The project was constructed under extremely tight space constraints. The wall was 250 feet long and up to 20 feet deep.

L-8 Canal Seepage Barrier, West Palm Beach County, FL (2004)
Slurry specialist for the construction of a soil-bentonite slurry wall of 270,000 sf up to 35 ft deep. Hard rock excavation and the remote location in sugar cane fields were special features of this project. Owner: South Florida Water Management District.

Building 360 PRB, Kelly USA, TX (2003)
QC specialist for the construction of the largest PRB constructed to date. The biopolymer slurry trench installation of zero-valent iron was 900 ft long, up to 32 ft deep, and up to 10 ft wide. Construction was in urban area with numerous underground utilities. Owner: USAF

Cherokee NW Dam, Denver, CO (2003)
Slurry wall specialist for the construction of a soil-bentonite slurry wall 2400 ft long and up to 32 ft deep. Slurry wall serves as a foundation cutoff wall beneath new earthen dike. Owner: Excel Energy Corporation

FGD Pond # 2 Expansion, Point of Rocks, WY (2002-3)
Slurry wall specialist for the construction of a soil-cement-bentonite slurry wall 10,000 ft long and up to 27 ft deep. Slurry wall serves as a foundation cutoff wall beneath new earthen dike. Parts of slurry wall were constructed up to 10 ft below water level of adjoining dam by means of dewatering trench and special procedures. Owner: Pacific Power Corporation

25th Avenue SCB Slurry Wall, Greeley, CO (2002)
Slurry wall specialist for the construction of a soil-cement-bentonite slurry wall 8600 ft long and up to 70 ft deep. Slurry wall impounds a former sand and gravel pit that is being converted into a water reservoir for the City of Greeley.

Stennis Space Center, MS – NASA (2001-2002)
On site lead operator and foreman for the installation of five soil-bentonite slurry walls and three biopolymer trench drains that form a funnel and gate system to treat Agent Orange, PCB, and TCE contaminated groundwater. The trenches were over 2000 lf and up to 50 ft deep. Project is phase 2 of a site closure for NASA.

Yuba City, CA - USACE (2001)
On-site supervision for the construction of a soil-bentonite slurry wall up to 65 ft deep and over mile long for a flood protection dike. Project was designed and managed by the Army Corp of Engineers.

Sacramento, CA – USACE (2000)
Project Manager with subcontractor to Inquip. Responsible for seven miles of levee restoration after completion of SCB slurry wall. Project was designed and managed by the Army Corp of Engineers.

Corpus Christi, TX – TECO (2000)
Served as operator, foreman, and slurry trench specialist for the construction of soil-bentonite slurry wall around hazardous waste landfill. Slurry wall was over 60 ft deep and one mile long.

Dumas, AR – USACE (1999)
Operator, foreman, and slurry trench specialist for one soil-bentonite slurry wall and three cement-bentonite slurry walls for the White River lock and dam. Project was constructed as a part of the lock and dam for navigation on the Arkansas River.

Bruce W. George
Slurry Specialist/Quality Control Technician

INTRODUCTION

Mr. George has had a long career in quality control, construction management and health and safety. For the last fifteen years, he has had significant involvement in slurry wall, biopolymer drain, and in-situ soil mixing construction.

CREDENTIALS

Education

B.S. Business Administration-Bowling Green State University	1973
First Aid - Instructors Course - American Red Cross	1984
40-Hour Hazardous Materials Certification	1990
8-Hour Hazardous Materials Supervisor Course	1990
8-Hour Hazardous Materials Refresher Course	Yearly
Radiological Worker II Training-Department of Energy	1993, 2000

Experience Synopsis

Mr. George has in excess of 25 years experience in quality control and safety aspects of specialty environmental and geo-technical construction. His background includes multiple projects in each of the following areas:

- Slurry cut-off walls (SB and SCB)
- Vertical HDPE Liners
- Deep soil mixing
- Jet Grouting
- Bio-Polymer Slurry Trench Drains
- Permeable Reactive Barriers

His role has varied from quality control supervisor to on-site project manager. Mr. George has been approved by the Army Corp of Engineers as a Slurry Trench Specialist. He previously had worked for the firm of Geo-Con. He is computer-literate and produces all field reports on a personal computer.

PROJECT EXPERIENCE (Selected Examples)

Slurry Walls and Bio-Polymer Drains

Suncor Oil Fields Project, Fort McMurray, Alberta, Canada (2007)

Slurry trench supervisor for the construction of a soil-bentonite slurry wall. The slurry wall was 900 meters long and up to 35 meters deep. The trench excavation was completed using Geo-Solutions custom Long Stick Excavator and Geo-Solutions Clam Shell.

Palm Beach Aggregates, Loxatchee, FL (2005-2006)
Slurry trench supervisor for the construction of a soil-bentonite slurry wall. The slurry wall was 10,500 feet long and up to 75 feet deep.

Mayfield Closure Area, New South Wales, Australia (2006)-Regional Lands Management Corp.-
Slurry trench supervisor for the construction of a soil-bentonite slurry wall. The slurry wall was 1500 meters long and up to 48 meters deep. Slurry wall excavation completed using a combination of Long Stick Excavator and Crane mounted clamshell

Piute Dam, Richfield, UT (2004) – Piute Reservoir and Irrigation Company
Slurry trench specialist for the construction of a biopolymer slurry drainage trench at the toe of a rural irrigation dam system. The installation included a HDPE vertical liner with filter fabric backing and 10 inch HDPE collection pipe with cleanouts, all installed under slurry. The trench was 575 ft long, 30 ft deep and 3 ft wide

Marysville, CA Emergency Level Repair (2004) - Yuba county Levee District
Slurry trench specialist for the construction of a soil-cement-bentonite slurry wall. The slurry wall was 2600 feet long and up to 45 ft deep

Tempe Landfill, Sydney, Australia (2004) – Sanitary Waste Authority
Slurry trench specialist for the construction of a soil-bentonite slurry wall near the international airport. The slurry wall was 16 m deep and 1400 m long. A full-scale test trench was completed as a part of the project design.

Former MGP Site, Sunbury, PA (2003) – PP&L
Slurry trench specialist for the construction of a biopolymer slurry drainage trench. The installed included a HDPE collection pipe with cleanouts installed under slurry. The trench was 265 ft long, 12 ft deep and 3 ft wide

25th Avenue SCB Slurry Wall, Greeley, CO (2002) - City of Greeley
Slurry trench specialist for the construction of a soil-cement-bentonite slurry wall keyed 3 ft into hard rock. The slurry wall was nearly 2 miles long and up to 65 ft deep. Special drilling methods were used to key into the rock.

Area A, Stennis Space Center, MS (2002) – NASA
Slurry trench specialist for the construction of a large permeable treatment wall. The wall consists of 5 soil-bentonite slurry walls and 3-biopolymer trench drains backfilled with iron/sand. Maximum depth was 55 ft.

PEC Site, North Vancouver, BC (2001) – Confidential
Slurry specialist and quality control technician for the construction of a very large permeable reactive barrier wall constructed by the biopolymer slurry method. The barrier consisted of 5 sections 6.5 to 8 ft wide and up to 60 ft deep.

Skinner Landfill, Cincinnati, OH (2001) - Superfund
Slurry specialist for the installation of a soil-bentonite slurry wall and biopolymer trench drain. The slurry wall was 20,000 sf up to 30 ft deep. The biopolymer drain was 15,000 sf and included a filter fabric envelope.

LD1 Slurry Wall, Yuba City, CA (2000) – Army Corp of Engineers
Night shift Slurry Trench Specialist and QC Supervisor for the construction of a soil-cement-bentonite slurry wall. The slurry wall was up to 60 ft deep and nearly two miles long.

Manchester Superfund Site, Kitsap County, WA (2000) – US EPA
Slurry specialist and QC duties for a soil-bentonite slurry wall. Slurry wall was up to 30 ft deep and 1400 ft long.

Marysville, CA (2000) – Army Corp of Engineers
QC manager and assistant slurry wall specialist for soil-bentonite slurry wall. Slurry wall was up to 45 ft deep and 4300 ft long.

West Sacramento, CA (1999) – Army Corp of Engineers
Night shift supervisor, QC Manager and a slurry specialist on this 306,000 sf, 50 foot deep project

Coffeeville KS (1999) - Private
Site supervisor and slurry specialist for a slurry wall that was 100,000 sf and 40 ft deep to funnel contaminated groundwater to a reactive barrier gates.

Yuba City, CA (1998) – Army Corp of Engineers
Served as on-site QC Manager and Assistant Superintendent and slurry specialist for this 350,000 sf soil-cement-bentonite slurry wall that was constructed to create a seepage barrier in a dike and its foundation.

Marysville, CA (1998) – Army Corp of Engineers
Served as on-site QC Manager and Assistant Superintendent and slurry specialist for this 700,000 sf, 72 ft deep soil-bentonite slurry wall constructed as a seepage barrier under an existing flood control levee.

Aurora, CO (1997) – City of Denver
Served as on-site quality control shift supervisor for this 75 ft deep, 500,000 sf slurry wall and site closure. Performed all field slurry quality tests and monitored required depth measurements on this large project that had machines working on two headings.

Sunset City, UT (1996) – US Air Force
Served as on site supervisor on this 25,000 sf aeration curtain wall project installed with the biopolymer drain method. The installation included HDPE pipe and a filter fabric installed under slurry in the trench.

Franklin, KY (1996) - Private
Served as the on-site QC inspector on this 20,000 sf groundwater collection trench installed with the

biopolymer drain method.

Denver, CO (1996) - Private
On-site inspector for the installation of an 8,000 sf air-sparging/vapor extraction trench system installed with the biopolymer drain method. The installation included a HDPE pipe installed under slurry.

Colorado Springs, CO (1995) - Private
Installation of a soil-bentonite cut-off wall and a biopolymer drain. Approximately 20,000 sf.

Des Moines, IA (1995) - Private
Installation of an 80,000 sf soil-bentonite slurry cut-off wall around a contaminated site.

Insitu Soil Mixing

Cresant-Ridge Wind Farm- Tower Stabilization- Princeton, Illinois (2005)
Served as an on-site supervisor and technician for the stabilization of wind-farm tower structures utilizing shallow soil mixing techniques. Supervised and trained grout-plant personnel, as well as operated crane and man-lifts in support of SSM operations.

West Memphis, AR (2000) – Superfund/US EPA
Served as on-site supervisor and technician for the stabilization of 40,000 CY of acid-petroleum contaminated soil and sludge up to 25 ft deep. Mixing methods employed included crane with 8 ft diameter auger/mixer and backhoe mixing. Pretreatment of some of the soil and sludge was performed with lime neutralization, followed by cementitious stabilization.

Sacramento, CA (1995) – City of Sacramento
Served as construction supervisor for the installation of a 40,000 sf soil-cement-bentonite groundwater barrier up to 60 ft deep using deep soil mixing. Mixing method employed crane mounted 4-auger/mixer rig and cement-bentonite grout.

Piketon, OH (1994) – US DoE
Served as safety officer for treatment of TCE contaminated soil using heated air and auger mixing. Over 25,000 CY treated with mixing and SVE. First full scale use of this technology at a DoE facility.

Whiting, IN (1993) - AMOCO
Served as safety officer and quality control technician for stabilization of over 100,000 CY of petroleum sludge up to 25 ft deep. Mixing methods employed included crane mounted 12 ft diameter auger/mixer and backhoe mixing using dry cement.

APPENDIX B

TRENCH QUALITY CONTROL FORMS

DAILY QUALITY CONTROL REPORT
AUGMENTED SVE TRENCH INSTALLATION
ENVIRO-CHEM SUPERFUND SITE
ZIONSVILLE, IND

SLURRY EXCAVATION

DAILY QC RESULTS

SLURRY: BIO-POLYMER

DATE: _____ SHIFT NO. _____

INSPECTOR: Geo-Solutions

BUCKET WIDTH: _____

SLURRY LEVEL ok / monitor

TRENCH VERTICALITY ok / monitor

MEASURE EXCAVATION PRIOR TO BACKFILLING (Every 10 lf)

DATE	STATION NO.	SURFACE ELEVATION (ft)	TRENCH DEPTH (ft)	BOTTOM ELEVATION (ft)	PANEL LENGTH (ft)	PANEL AREA EXCAVATED (sf)	COMMENTS

Geo-Solutions

						SQ FT TODAY	
						SQ FT TODATE	

COMMENTS: _____

SIGNED: _____
Contractor's QC Oversite

SIGNED: _____
Owner's Representative

APPENDIX C

EXCAVATION PROGRESS REPORT

EXCAVATION PROGRESS REPORT
Enviro-Chem Superfund Site
Attachment Z-1 Remedy
Zionsville, Indiana

Date: _____ Weather Conditions: _____

On-Site Personnel:

_____

_____

Equipment/Materials Delivered to or Removed from the Site:

_____

_____

Activity Performed:

_____

_____

Volume of Material Removed for the Excavation: _____

Location: _____

Status of Related Construction and Water Control: _____

Problems or Conditions Encountered:

_____

_____

Resolution of Problems or Conditions:

_____

_____

I certify that the information contained in or accompanying this report is true, accurate and complete. As to the identified portions of this plan for which I cannot personally verify its truth and accuracy, I certify as the Contractor's official having supervisory responsibility for the persons who, acting under my instructions, made the verification, that this information is true, accurate and complete. All areas not in conformance or which differ shall be highlighted or otherwise noted.

By. _____
HIS Constructors, LLC

APPENDIX D

BIOPOLYMER VISCOSIFIER MATERIAL SPECIFICATION

RANTEC CORPORATION

P.O. BOX 729,
HWY 14 WEST, RANCHESTER, WY 82839
PH 307-655-9565 FAX 307-655-9528

Product Specifications
Superior Biopolymer Products

RANTEC G150

Rantec G150 is a coarse granulation medium viscosity product designed for use in drilling fluids and liquid shoring slurry for trenching, as well as flocculent and depressant applications in the mining industry. G150 is generally characterized as a 100 mesh powder which *typically* yields a cold water viscosity of 3800-4500 cps after hydrating for 2 hours. *Minimum* product specifications ensured by Rantec are listed below.

Product Specifications		Analysis Method
Moisture	8.0-12%	B-M-2.01
Protein	5.8% Maximum	B-P-2.01
pH	5.2 to 6.5	C-P-2.01
Granulation		
Through 100 mesh	85% Minimum	B-M-1.03
Through 200 mesh	30-40%	
Through 325 mesh	20% Maximum	
Viscosity minimums		
15 Minutes	2000 cps	B-V-1.03B
30 Minutes	2800	
1 Hour	3500	
2 Hours	3800	
24 Hours	90% Minimum of 2 Hour Value	

Revised 11/4/94 Copyright Rantec Corporation
Specifications warranted are attached as Rantec G150 Product specifications.

Storage and Handling
Store in cool, dry place. Keep container closed to avoid moisture pick-up. Properly cover material and retest after extended storage to assure quality prior to use.

Packaging
Standard packing is 25 kilo or 50 pound value pack, five-ply paper bag with a polyethylene barrier.

Spillage and Waste Disposal
Please note that Rantec G150 Biopolymer becomes very slippery when wet. First, sweep up dry and vacuum area. Flush area with soap and water to remove traces. Repeat if necessary. Do not dump down sewers or drains as this may cause blockage.

Handling and Hazard Considerations
Rantec G150 Biopolymer is not toxic and is not considered to be hazardous to handle. We suggest using dust masks, gloves, and appropriate safety glasses if dust becomes a problem when emptying bags. Rantec G150 Biopolymer con be removed from skin with soap and water and from the eyes by flushing with water. Consult your doctor immediately if any skin, eye, respiratory or other irritations occur after handling.

Food Ingredient Status
The United States Food and Drug Administration, the European Economic Community, and the World Health Organization accept Rantec G150 Biopolymer (food grade only) as a food additive/ingredient providing it meets specified purity standards and dosage limitations. Procol products are tested by the manufacturer to ensure that purity requirements are met. Maximum usage levels permitted may vary from country to country. Industrial grades sold by Polypro International Inc. and Rantec Corporation are *not tested* to ensure complete food ingredient status.

Notice
INFORMATION CONTAINED IN THE COMPANY'S TECHNICAL LITERATURE IS BELIEVED TO BE ACCURATE AND THE COMPANY WARRANTS THAT ANY RANTEC G150 BIOPOLYMER DELIVERED WILL COMPLY WITH THE COMPANY'S PUBLISHED SPECIFICATIONS FOR QUALITY. IT IS A CONDITION TO ANY SALE THAT BUYER CONDUCT AN EXAMINATION OF THE PRODUCTS UNDER ITS OWN OPERATING CONDITIONS AND DETERMINE TO ITS OWN SATISFACTION THAT THE PRODUCTS DELIVERED HEREUNDER ARE OF ACCEPTABLE QUALITY AND ARE SUITABLE FOR BUYER'S CONTEMPLATED USE. EXCEPT AS EXPRESSLY PROVIDED HEREIN, THE COMPANY MAKES NO REPRESENTATION OR WARRANTY OF ANY KIND, EXPRESS OR IMPLIED, WITH RESPECT TO ITS PRODUCTS OR TO THE USE OF ITS PRODUCTS THE BUYER IN COMBINATION WITH OTHER SUBSTANCES, WHETHER AS TO MERCHANTABILITY, FITNESS FOR A PARTICULAR PURPOSE, OR ANY OTHER MATTER. THE COMPANY SHALL HAVE NO LIABILITY TO ANY PERSON FOR ANY CLAIM TO SPECIAL, CONSEQUENTIAL, INCIDENTAL OR PENAL DAMAGES OF ANY KIND RESULTING FROM BREACH OF CONTRACT, WARRANTY, TORT (INCLUDING NEGLIGENCE AND STRICT LIABILITY) OR OTHERWISE IN CONNECTION WITH THE SALE OR USE OF PRODUCTS PROVIDED HEREUNDER. STATEMENTS CONCERNING THE POSSIBLE USE OF THE COMPANY'S PRODUCTS ARE NOT INTENDED AS RECOMMENDATIONS TO USE THE COMPANY'S PRODUCTS IN THE INFRINGEMENT OF ANY PATENT.

Manhole/Vault Specifications

TRANSMITTAL OF CONTRACTOR'S SUBMITTAL
(ATTACH TO EACH SUBMITTAL)

DATE: NOVEMBER 29, 2007

TO: N.W. Bernstein & Associates, LLC
800 Westchester Ave., Suite N319, Rye Brook, NY 10573
Attn: Mr. Norman W. Bernstein (Trustee)
P: (914) 358-3500; F: (914) 701-0707
E-Mail: nwbernstein@nwbllc.com

TO: ENVIRON International Corp.
740 Waukegan Rd., Suite 401, Deerfield, IL 60015
Attn: Mr. Ron Hutchens, P.E.
P: (847) 444-9200 Ext. 211; F: (847) 444-9240
E-Mail: rhutchens@environcorp.com

FROM: HIS Constructors, LLC
Contractor
5150 East 65th Street, Suite B, Indianapolis, IN 46220
Attn: Mr. Brian Keeney
E-Mail: Brian.Keeney@hisconstructors.com
P: (317) 541-9290; F: (317) 541-9436

ENVIRON Submittal No.:

HIS Internal Submittal No.: 070047-10

☒ New Submittal ☐ Resubmittal

Enviro-Chem Superfund Site Attachment Z-1 Remedy

HIS Project No.: 070047

Specification Section No.: Section 02730 Vaults and Manholes
(Cover only one section with each transmittal)

Schedule Date of Submittal:
November 29, 2007

SUBMITTAL TYPE: ☒ Shop Drawing ☐ Sample ☐ Informational

The following items are hereby submitted:

Number of Copies	Description of Item Submitted (Type, Size, Model Number, Etc.)	Spec. and Para. No.	Drawing or Brochure Number	Contains Variation to Contract	
				No	Yes
1	PRGS Manhole 1 to 7 Shop Drawings	02730 1.03B	C-3 & C-5 to C-8 & C-10 and C-12	X	
1	PRGS Collection Manhole	02730 1.03B	C-3 & C-5 to C-8 & C-10 and C-12	X	
1	Manhole Casting Cut Sheet	02730 2.04B 1		X	
1	Pipe to Manhole Connectors	02730 2.03E		X	

CONTRACTOR hereby certifies that it has complied with the requirements of Subcontract Documents in preparation, review, and submission of designated Submittal and (ii) the Submittal is complete and in accordance with the Subcontract Documents and requirements of laws and regulations and governing agencies.

By: Brian Keeney
CONTRACTOR (Authorized Signature)

REV 02/02 FORM 295

PRGS MANHOLES
1 THROUGH 7

Job Name: Enviro Chem Superfund
Quote ID: 2007110014

Independent Concrete Pipe Company

Structure ID: 1

Spec: Storm - Manhole - Booted
Type: Standard
Size: 48"

Rim: 888.1'
Invert: 880.5'
Rim to Invert: 7.6'

Overall Height: 9.667'
Catch: 17"

1) 24" - Casting 30" Round (not supplied)
1) 48" - 048FT30
1) 48" - 048MH-Inc-43"
1) 48" - 048MHPB52
2) 48" - JTMKS
2) 7" - S106-7S
6) STEPS

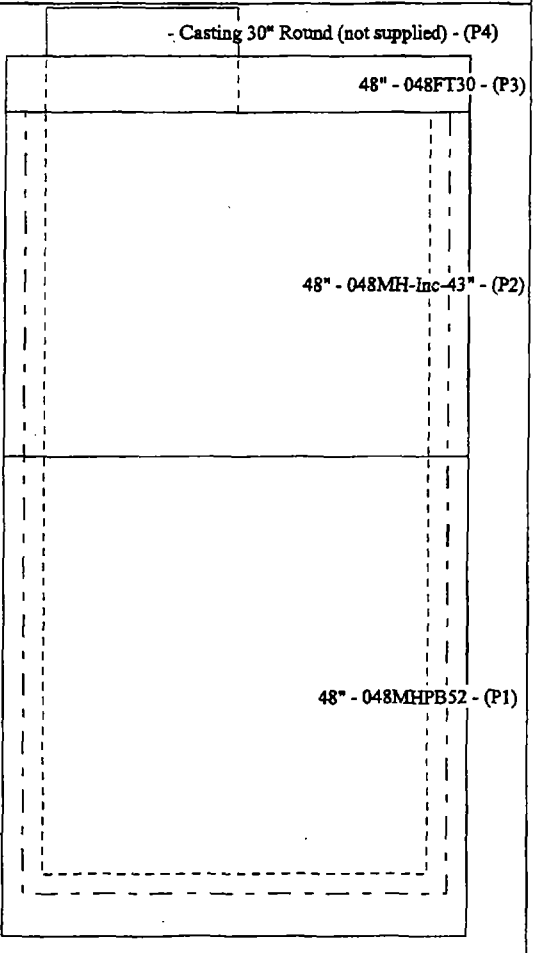

Position	Elev	Angle	Pipe	Connector	Hole
Rim	888.1'				
Reducer					
Invert 1	880.5'	0°	4" N-12 (HDPE)	7" K-N-S S106-7S	7"
Invert 2	881.5'	180°	4" N-12 (HDPE)	7" K-N-S S106-7S	7"
Invert 3					
Invert 4					
Invert 5					
Invert 6					

Normal

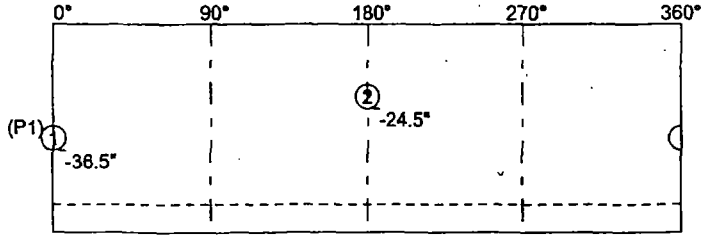

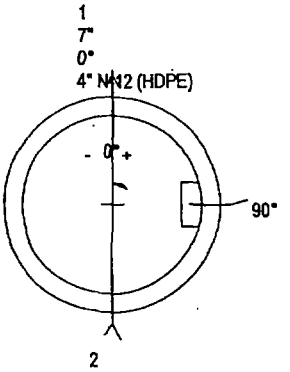

(P1) - 48" - 048MHPB52

Job Name: Enviro Chem Superfund
Quote ID: 2007110014

Independent Concrete Pipe Company

Structure ID: 2

Spec: Storm - Manhole - Booted
Type: Standard
Size: 48"

Rim: 887.9'
Invert: 880'
Rim to Invert: 7.9'

Overall Height: 9.917'
Catch: 17"

1) 24" - Casting 30" Round (not supplied)
1) 48" - 048FT30
1) 48" - 048MH-Inc-46"
1) 48" - 048MHPB52
2) 48" - JTMKS
3) 7" - S106-7S
6) STEPS

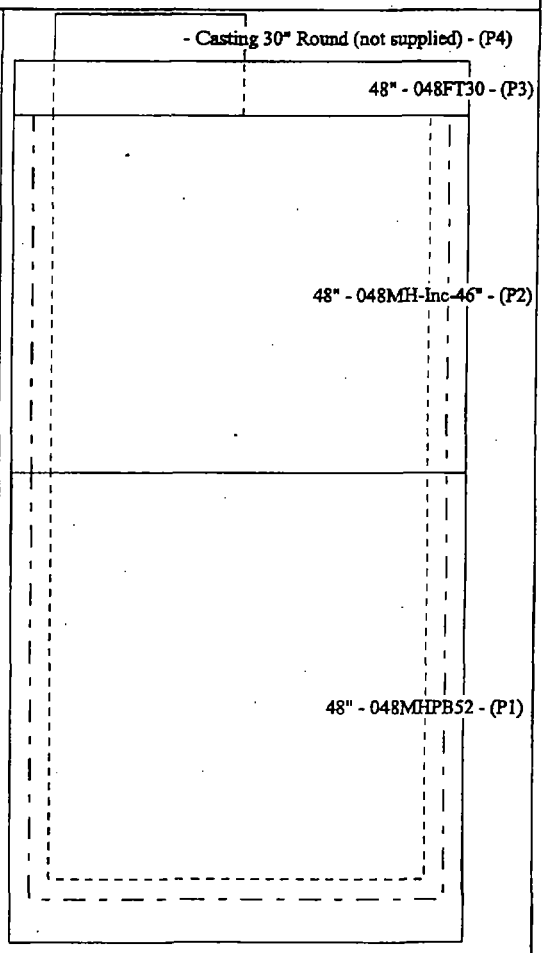

Structure Notes: All holes are tangential.

Position	Elev	Angle	Pipe	Connector	Hole
Rim	887.9'				
Reducer					
Invert 1	880'	19°	4" N-12 (HDPE)	7" K-N-S S106-7S	7"
Invert 2	880.5'	161°	4" N-12 (HDPE)	7" K-N-S S106-7S	7"
Invert 3	881'	199°	4" N-12 (HDPE)	7" K-N-S S106-7S	7"
Invert 4					
Invert 5					
Invert 6					

Normal

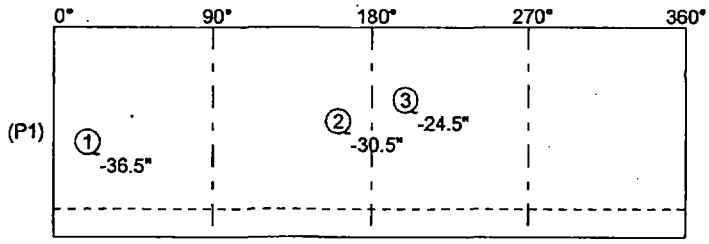

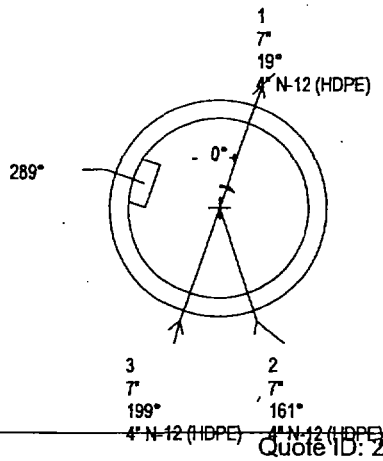

(P1) - 48" - 048MHPB52

Job Name: Enviro Chem Superfund
Quote ID: 2007110014

Independent Concrete Pipe Company

Structure ID: 3
Spec: Storm - Manhole - Booted
Type: Standard
Size: 48"

Rim: 887.9'
Invert: 879.5'
Rim to Invert: 8.4'

Overall Height: 10.417'
Catch: 17"

1) 24" - Casting 30" Round (not supplied)
1) 48" - 048FT30
1) 48" - 048MH-Inc-52"
1) 48" - 048MHPB52
2) 48" - JTMKS
3) 7" - S106-7S
6) STEPS

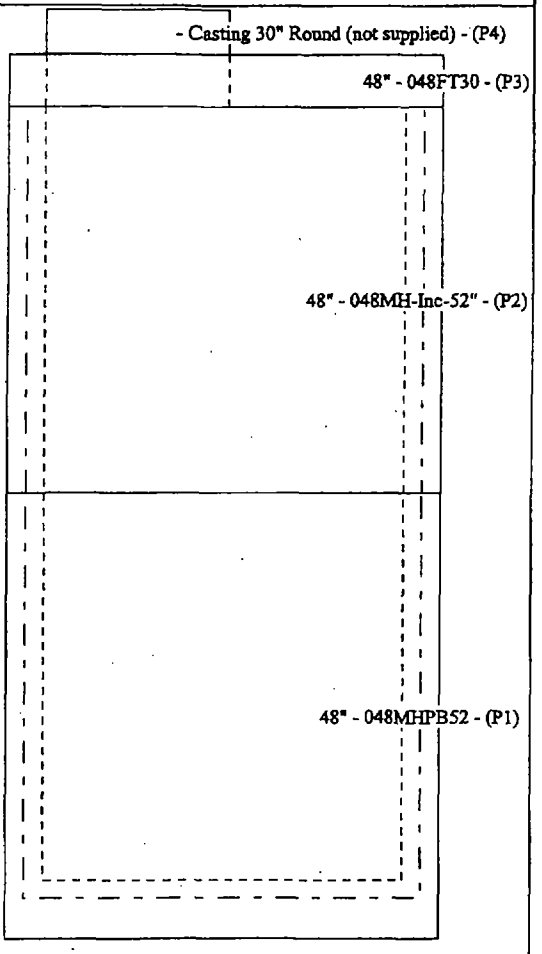

Structure Notes: All holes are tangential.

Position	Elev	Angle	Pipe	Connector	Hole
Rim	887.9'				
Reducer					
Invert 1	879.5'	19°	4" N-12 (HDPE)	7" K-N-S S106-7S	7"
Invert 2	880'	161°	4" N-12 (HDPE)	7" K-N-S S106-7S	7"
Invert 3	880.5'	199°	4" N-12 (HDPE)	7" K-N-S S106-7S	7"
Invert 4					
Invert 5					
Invert 6					

Normal

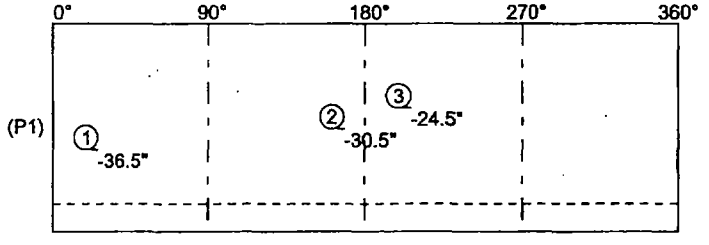

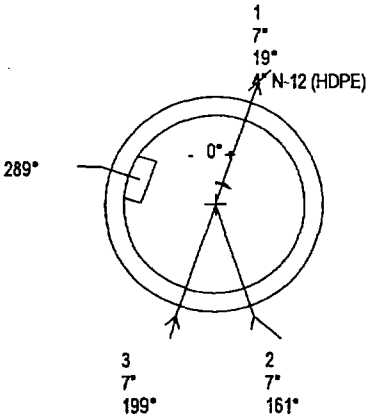

(P1) - 48" - 048MHPB52

Job Name: Enviro Chem Superfund
Quote ID: 2007110014

Independent Concrete Pipe Company

Structure ID: 4

Spec: Storm - Manhole - Booted
Type: Standard
Size: 48"

Rim: 886.9'
Invert: 878.5'
Rim to Invert: 8.4'

Overall Height: 10.417'
Catch: 17"

1) 24" - Casting 30" Round (not supplied)
1) 48" - 048FT30
1) 48" - 048MH-Inc-52"
1) 48" - 048MHPB52
2) 48" - JTMKS
3) 7" - S106-7S
6) STEPS

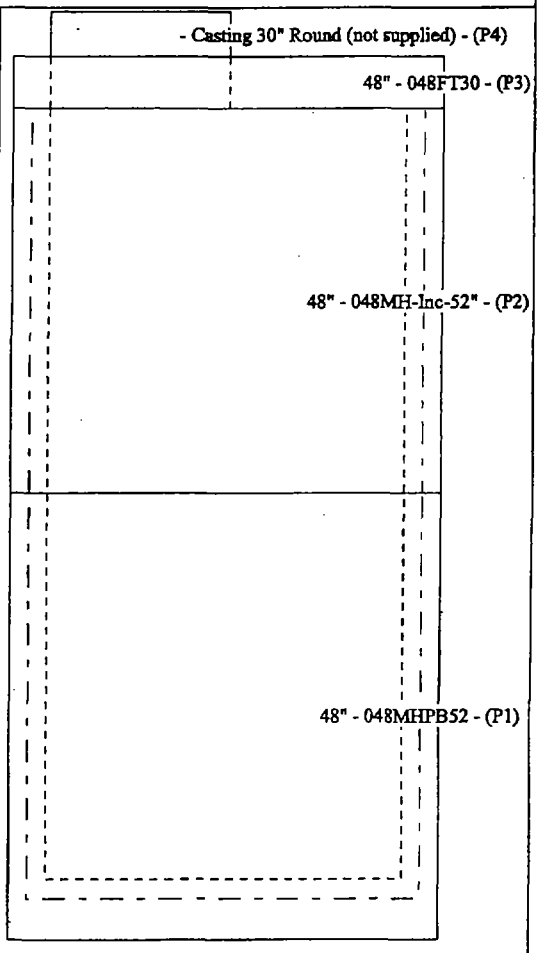

Structure Notes: All holes are tangenital.

Position	Elev	Angle	Pipe	Connector	Hole
Rim	886.9'				
Reducer					
Invert 1	878.5'	19°	4" N-12 (HDPE)	7" K-N-S S106-7S	7"
Invert 2	879.5'	161°	4" N-12 (HDPE)	7" K-N-S S106-7S	7"
Invert 3	880'	199°	4" N-12 (HDPE)	7" K-N-S S106-7S	7"
Invert 4					
Invert 5					
Invert 6					

Normal

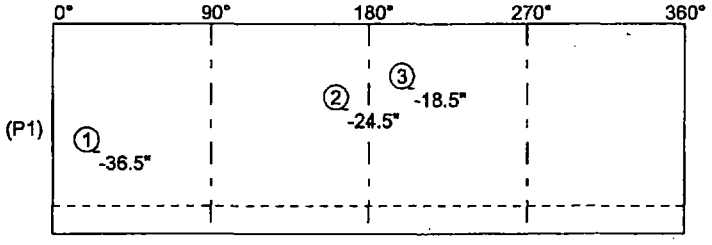

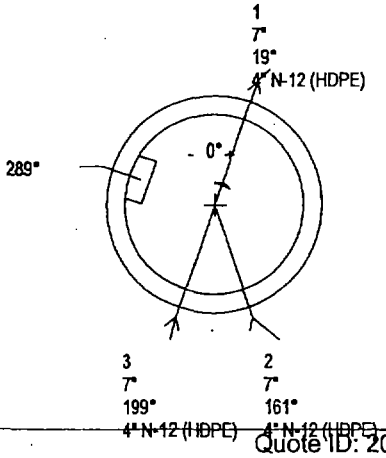

(P1) - 48" - 048MHPB52

Job Name: Enviro Chem Superfund
Quote ID: 2007110014

Independent Concrete Pipe Company

Structure ID: 5

Spec: Storm - Manhole - Booted
Type: Standard
Size: 48"

Rim: 884.7'
Invert: 878.25'
Rim to Invert: 6.45'

Overall Height: 8.417'
Catch: 17"

1) 24" - Casting 30" Round (not supplied)
1) 48" - 048FT30
1) 48" - 048MH32
1) 48" - 048MH48
1) 48" - 048B
3) 48" - JTMKS
3) 7" - S106-7S
6) STEPS

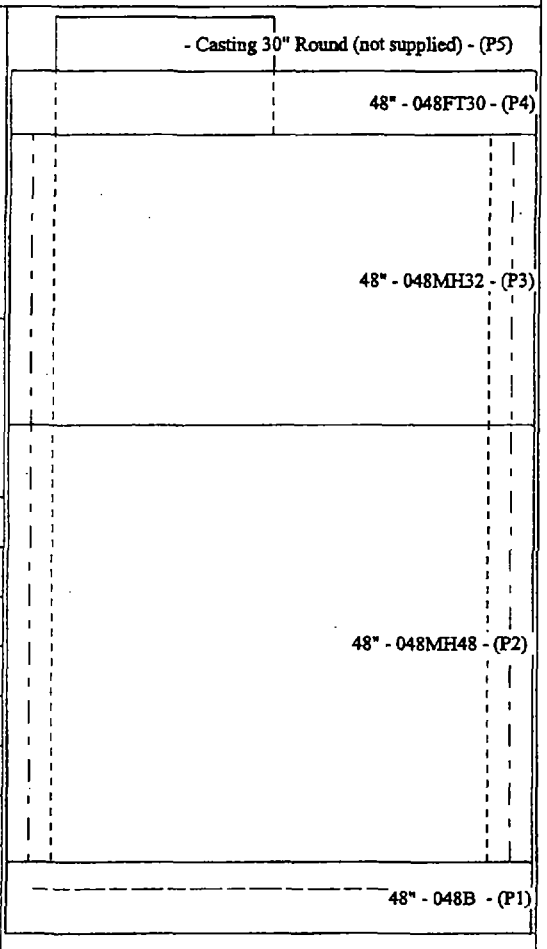

Structure Notes: All holes are tangenital.

Position	Elev	Angle	Pipe	Connector	Hole
Rim	884.7'				
Reducer					
Invert 1	878.25'	19°	4" N-12 (HDPE)	7" K-N-S S106-7S	7"
Invert 2	878.5'	161°	4" N-12 (HDPE)	7" K-N-S S106-7S	7"
Invert 3	879'	199°	4" N-12 (HDPE)	7" K-N-S S106-7S	7"
Invert 4					
Invert 5					
Invert 6					

Normal

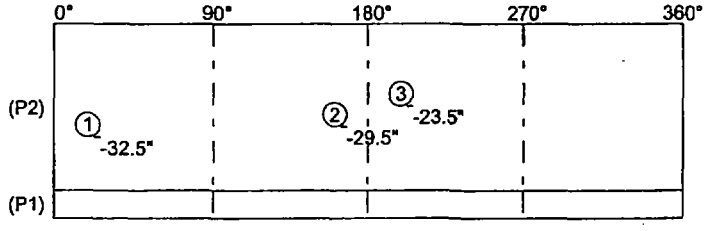

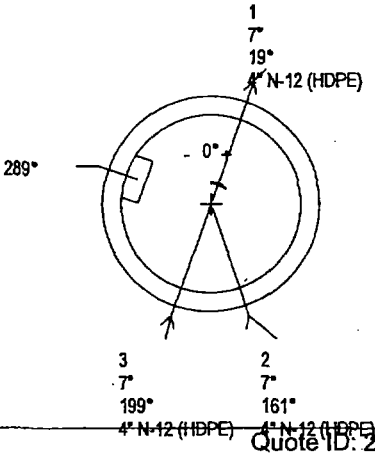

(P2) - 48" - 048MH48
(P1) - 48" - 048B

Job Name: Enviro Chem Superfund
Quote ID: 2007110014

Independent Concrete Pipe Company

Structure ID: **6**

Spec: Storm - Manhole - Booted
Type: Standard
Size: 48"

Rim: 882.6'
Invert: 874.25'
Rim to Invert: 8.35'

Overall Height: 10.417'
Catch: 17"

1) 24" - Casting 30" Round (not supplied)
1) 48" - 048FT30
1) 48" - 048MH-Inc-52"
1) 48" - 048MHPB52
2) 48" - JTMKS
3) 7" - S106-7S
6) STEPS

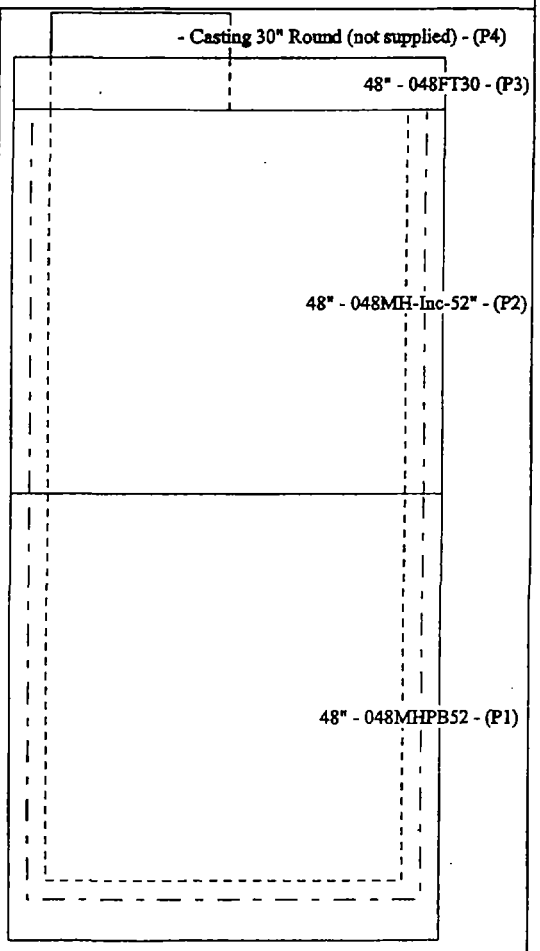

Structure Notes: **All holes are tangential.**

Position	Elev	Angle	Pipe	Connector	Hole
Rim	882.6'				
Reducer					
Invert 1	874.25'	19°	4" N-12 (HDPE)	7" K-N-S S106-7S	7"
Invert 2	874.5'	161°	4" N-12 (HDPE)	7" K-N-S S106-7S	7"
Invert 3	875'	199°	4" N-12 (HDPE)	7" K-N-S S106-7S	7"
Invert 4					
Invert 5					
Invert 6					

Normal

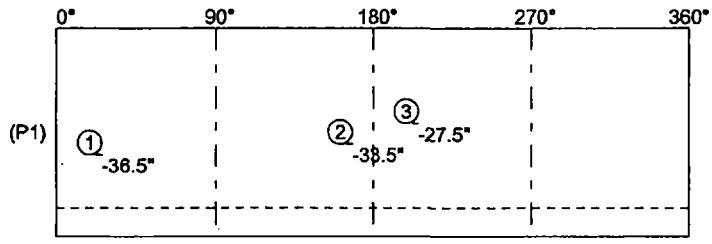

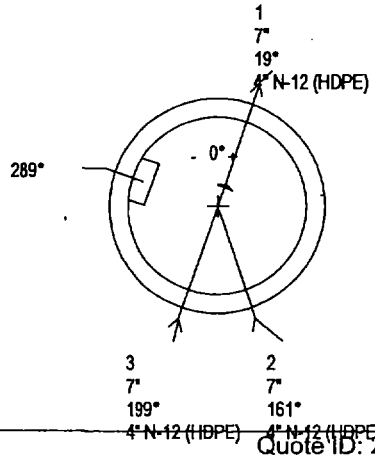

(P1) - 48" - 048MHPB52

Job Name: Enviro Chem Superfund
Quote ID: 2007110014

Independent Concrete Pipe Company

Structure ID: 7

Spec: Storm - Manhole - Booted
Type: Standard
Size: 48"

Rim: 884.5'
Invert: 874.5'
Rim to Invert: 10'

Overall Height: 12.083'
Catch: 17"

1) 24" - Casting 30" Round (not supplied)
1) 48" - 048FT30
1) 48" - 048MH-Inc-40"
1) 48" - 048MH-Inc-48"
1) 48" - 048MHPB36
3) 48" - JTMKS
2) 7" - S106-7S
8) STEPS

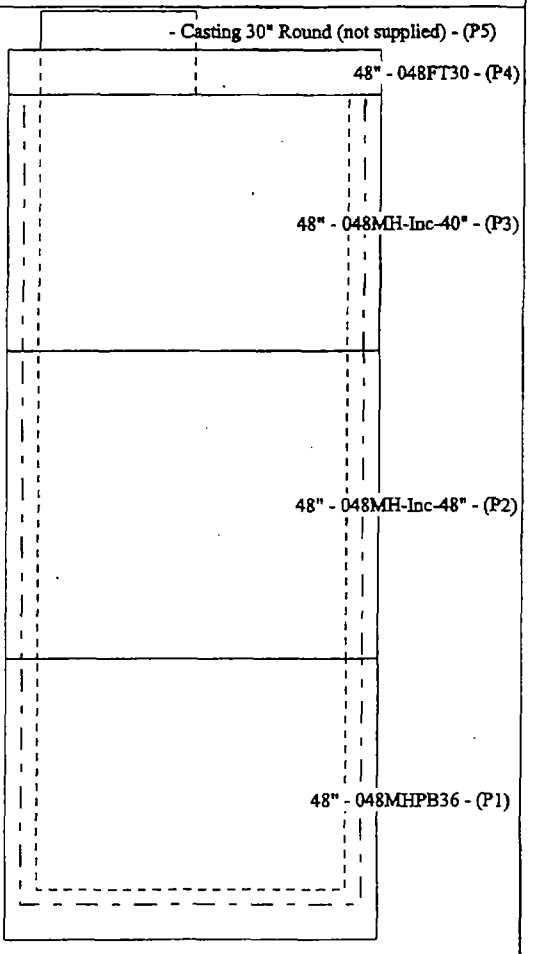

Structure Notes: All holes are tangential.

Position	Elev	Angle	Pipe	Connector	Hole
Rim	884.5'				
Reducer					
Invert 1	874.5'	0°	4" N-12 (HDPE)	7" K-N-S S106-7S	7"
Invert 2	875'	180°	4" N-12 (HDPE)	7" K-N-S S106-7S	7"
Invert 3					
Invert 4					
Invert 5					
Invert 6					

Normal

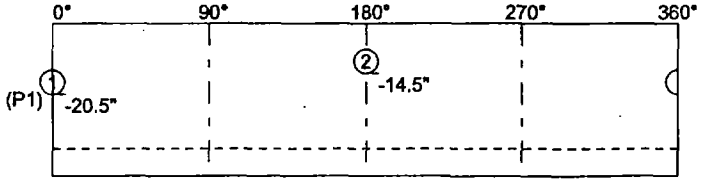

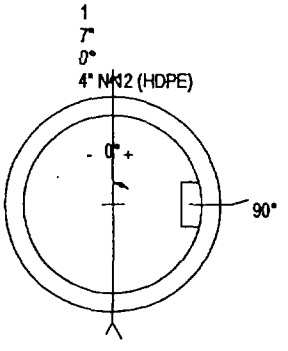

(P1) - 48" - 048MHPB36

PRGS COLLECTION MANHOLE

Job Name: Enviro Chem Superfund
Quote ID: 2007110014

Independent Concrete Pipe Company

Structure ID: **CMH**

Spec: Storm - Manhole - Booted
Type: Standard
Size: 48"

Rim: 883'
Invert: 874'
Rim to Invert: 9'

Overall Height: 11.083'
Catch: 17"

1) 24" - Casting 30" Round (not supplied)
1) 48" - 048FT30
1) 48" - 048MH-Inc-32"
1) 48" - 048MH-Inc-44"
1) 48" - 048MHPB36
3) 48" - JTMKS
3) 7" - S106-7S
7) STEPS

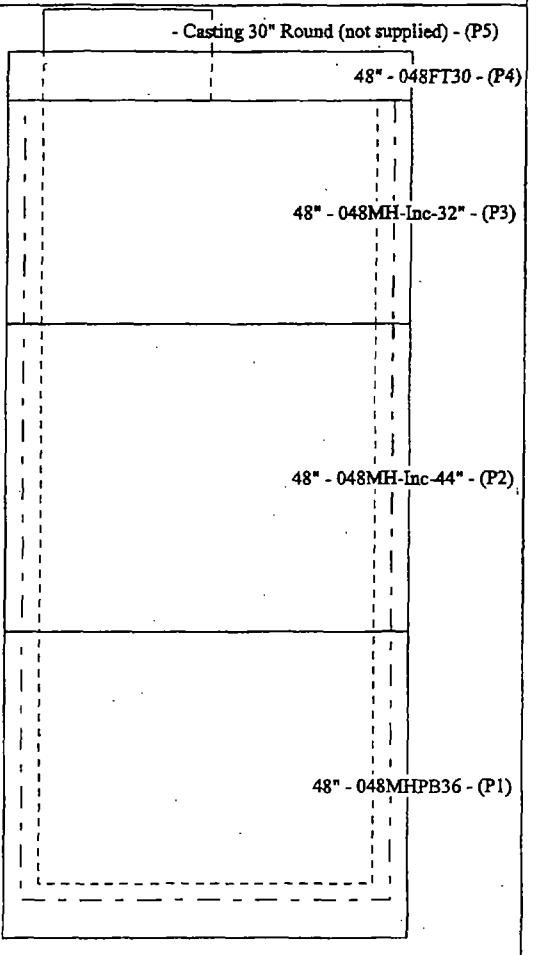

Structure Notes: All holes are tangenital.
Invert #3 is 1 1/2" HDPE & booted.

Position	Elev	Angle	Pipe	Connector	Hole
Rim	883'				
Reducer					
Invert 1	874'	0°	4" N-12 (HDPE)	7" K-N-S S106-7S	7"
Invert 2	877'	251°	4" N-12 (HDPE)	7" K-N-S S106-7S	7"
Invert 3	880'	289°	2" N-12 (HDPE)	7" K-N-S S106-7S	7"
Invert 4					
Invert 5					
Invert 6					

Normal

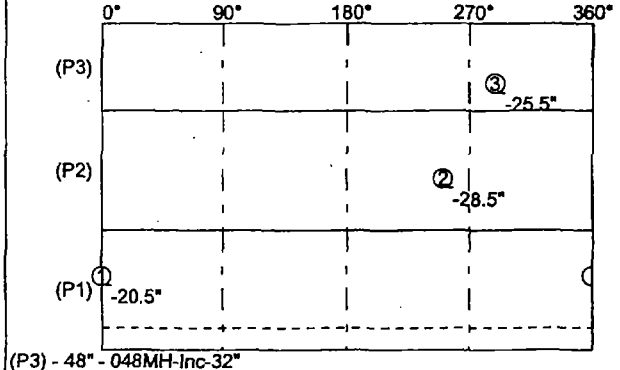

(P3) - 48" - 048MH-Inc-32"
(P2) - 48" - 048MH-Inc-44"
(P1) - 48" - 048MHPB36

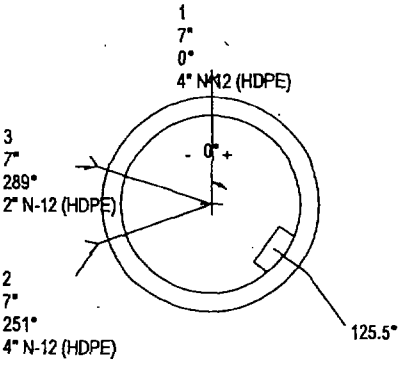

MANHOLE CASTING CUT SHEET

R-1573
Manhole Frame, Vented Lid

Heavy Duty

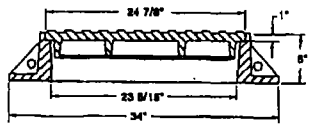

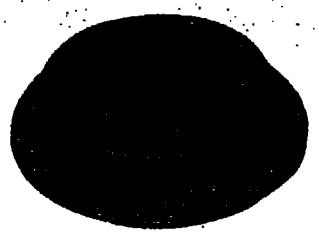

R-1574
Manhole Frame, Solid Lid

Heavy Duty

Cover locking lugs and frame lug guides are standard.

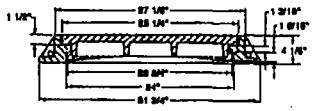

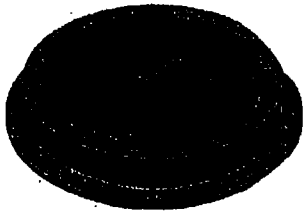

R-1575
Manhole Frame, Solid Lid

Heavy Duty

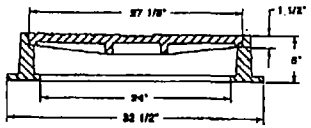

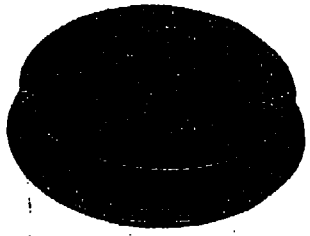

R-1576
Manhole Frame, Solid Lid

Heavy Duty

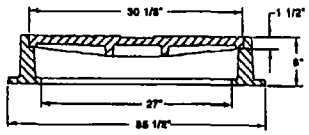

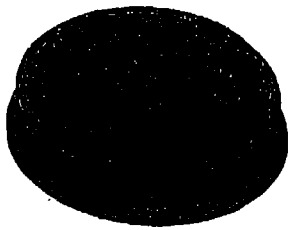

PIPE TO MANHOLE CONNECTORS

KOR-N-SEAL® I & II
FLEXIBLE PIPE-TO-MANHOLE CONNECTORS

SPECIFICATION SHEET

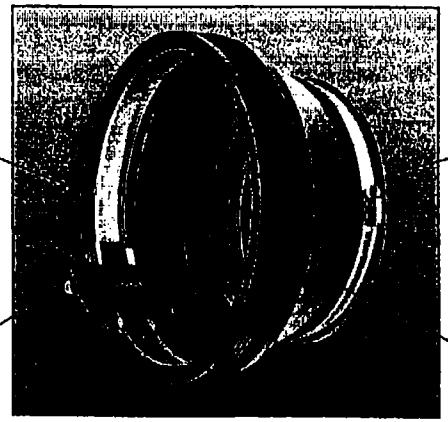

KOR-N-SEAL I - WEDGE KORBAND CONNECTOR ASSEMBLY

Install Kor-N-Seal I - Wedge Korband
with Socket Wrench & Torque Limiter

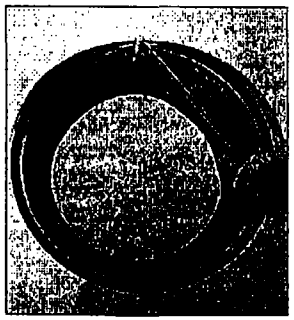

Install Kor-N-Seal II - Wedge Korband
with Standard Torque Wrench

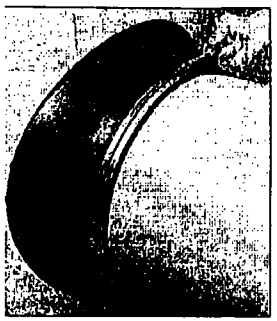

Install Pipe Clamp(s)
with T-Handle Torque Wrench

www.npc.com
250 Elm Street • P.O. Box 301
Milford, NH 03055, U.S.A.
Tel: 603-673-8680 • 800-626-2180 • Fax: 603-673-7271

02/06

KOR-N-SEAL® I & II

Flexible Pipe-to-Manhole Connectors

SPECIFICATION SHEET

PERFORMANCE

[illegible]	[illegible]	[illegible]	[illegible]
Head Pressure	C923 - 7.1	0° - 13 psi (30 ft) for 10 min. 7° - 10 psi (23 ft) for 10 min.	+13 psi for 10 min. +10 psi for 10 min.
Deflection Test	C923 - 7.2.2	7° in any direction	Over 7° in any direction
Load Test	C923 - 7.2.3	150 lbs/in. pipe dia.	Over 150 lbs/in. pipe dia.

Performed on all standard sizes of Kor-N-Seal Connectors.

RESILIENT EPDM OR POLYISOPRENE RUBBER

Conforms to ASTM C923

[illegible]	[illegible]	[illegible]	[illegible]
Chemical Resistance	D543, at 22°C for 48 h		
1 *N* Sulfuric Acid		No weight loss	No weight loss
1 *N* Hydrochloric Acid		No weight loss	No weight loss
Tensile Strength	D412	1200 psi	1560 psi
Elongation at Break		350% min.	500%
Hardness	D2240 (shore A durometer)	± 5 from the manufacturer's specified hardness	48 ± 5
Accelerated Oven-Aging	D573 70 ± 1°C for 7 days	Decrease of 15%, max. of original tensile strength, decrease of 20% max. of elongation	10.1% tensile decrease 14.0% elongation decrease
Compression Set	D395, method B, at 70°C for 22 h	Decrease of 25%, max. of original deflection	13% decrease
Water Absorption	D471, immerse 0.75 by 2-in. specimen in distilled water at 70°C for 48 h	Increase of 10%, max. of original by weight	.8% increase
Ozone Resistance	D1171	Rating 0	Rating 0
Low-temperature Brittle Point	D746	No fracture at -40°C	No fracture at -40°C
Tear Resistance	D624, method B	200 lbf/in.	No tear at 210 lbf/in.

INTERNAL KORBAND

Conforms to ASTM C923, ASTM A666, and A240

- Korband Assembly is manufactured of 300 series stainless steel.
- Toggle Expander is made of 300 series stainless steel.
- The 108/408 series Wedge Expander is made from reinforced nylon or 300 series stainless steel.
- The 208/308 series Wedge Expander is made from 300 series stainless steel.

EXTERNAL PIPE CLAMP

Conforms to ASTM C923, ASTM A666, and A240

External take-up clamps are manufactured of 300 series stainless steel.

www.npc.com
250 Elm Street • P.O. Box 301
Milford, NH 03055, U.S.A.
Tel: 603-673-8680 • 800-626-2180 • Fax: 603-673-7271

Contractor Quality Control Plan

Site Specific Quality Management Plan
FOR
ATTACHMENT Z-1 REMEDY

ENVIRO-CHEM SUPERFUND SITE
ATTACHMENT Z-1 REMEDY
985 SOUTH U.S. HIGHWAY 421
ZIONSVILLE, INDIANA

Prepared for:

Environ International Corporation
740 Waukegan Road, Suite 401
Deerfield, IL 60015

Submitted by:

HIS Constructors, LLC.
5150 E 65th Street, Suite B
Indianapolis, IN 46220

January 22, 2008

Table of Contents

1.0 Introduction..... 3
2.0 Site Description and History..... 4
3.0 Scope of Work..... 5
4.0 SSQM Project Organization and Management..... 6
5.0 Construction Quality Control Program..... 7
6.0 Mobilization/Site Preparation..... 10
7.0 Construction Quality Assurance Applications 12
8.0 EX SITU Soil Vapor Extraction Cell (If Necessary).....14
9.0 Testing 15

List of Attachments

Attachment A - Laboratory Certifications
- Pace Analytical Testing
- PSI Geotechnical Testing

Attachment B – Augmented SVE Trench Excavation Form
Attachment C – Polymer Slurry QC From
Attachment D – Augmented SVE Trench Slope Backfill Form

List of Tables

Table 1 - SQA Applications
Table 2 – Environmental Monitoring
Table 3 – Geotechnical Testing

List of Figures

Figure 1- Organization Chart

LIST OF ACRONYMS AND ABBREVIATIONS

ASTM	American Society for Testing and Materials
AAMP	Ambient Air Monitoring Plan
bgs	below ground surface
cu ft	cubic foot (feet)
cu yd	cubic yard
CLP	Contract Laboratory Program
COI(s)	compounds of interest
COC(s)	compounds of concern
DOT	Department of Transportation
EC	Site Emergency Coordinator
ECC	Enviro-Chem
ENVIRON	ENVIRON International Corporation
ft	feet, foot
ft2	square foot
GPM	gallons per minute
HASP	Health and Safety Plan
HIS	HIS Constructors, LLC
HDPE	high-density polyethylene
IDEM	Indiana Department of Environmental Management
in	inch
MSL	mean sea level
mg/kg	milligram per kilogram
mg/l	Milligram per liter
MS/MSD	matrix spike/matrix spike duplicate
NAPL	non-aqueous phase liquid
OSHA	Occupational Safety and Health Administration
PID	photoionization detector
PPE	personal protective equipment
QAPP	Quality Assurance Project Plan
QA/QC	Quality Assurance/Quality Control
RCRA	Resource Conservation and Recovery Act
SOP	Standard Operating Procedure
SQC	Site Quality Control
SVOC(s)	semi-volatile organic compound(s)
TCLP	Toxicity Characteristic Leaching Procedure
UST	underground storage tank
USCS	Unified Soil Classification System
USEPA	United States Environmental Protection Agency
VOC(s)	Volatile Organic Compound(s)

1.0 Introduction

HIS Constructors, LLC (HIS) has prepared this Site Specific Quality Management Plan (SSQMP) in accordance with the contract dated November 14, 2007 between HIS and the Enviro-Chem Site Trust Fund (the "Contract"). This SSQMP under the direction of the Contract will outline the practices and procedures for the quality assurance in the implementation of the Contract Technical Specifications for the Enviro-Chem Superfund Site (ECC) Attachment Z-1 Remedy in Zionsville Indiana.

2.0 Site Description and History

The ECC site is located in Boone County, north of Zionsville, Indiana, approximately 10 miles northwest of Indianapolis, in an area that is primarily agricultural but also contains some areas of commercial and industrial land use.

The ECC site has no current operations and has been inactive since approximately 1983. Between 1987 and 1990, field investigations were preformed at the site by Environmental Resources Management-North Central, Inc. (ERM) on behalf of the ECC potential responsible parties, and CH2M Hill on behalf of the USEPA. The results of the field investigations showed the primary significant chemical constituents in the soil and water at the ECC site were chlorinated volatile organic compounds (VOC's). Remediation activities, including the excavation of the Southern Concrete Pad area and the installation of the SVE system on the north and central treatment areas were conducted from 1997 through 2000.

The installed SVE system as currently configured at the ECC site hasn't achieved the subsurface water cleanup standards in the till. The USEPA and IDEM are concerned that failure to achieve those cleanup standards may, over time have an adverse effect on water quality in Unnamed Ditch. The ditch is located adjacent to the eastern portion of the site. For this reason the Consent Decree (CD) and the amended Record of Decision (ROD) provide for specific additional work to be performed if USEPA determines that those standards were not met with the 5 year period, unless the parties agreed otherwise. The standards were not met within the 5 year period provided in the CD and the agreed upon "Additional Work" is presented in Attachment Z-1.

3.0 Scope of Work

In general the scope of work for ECC Site consists of, but is not limited to, the following:

- Site Preparation.
- Installation of Erosion Control Measures
- Site Layout
- Strip and Stockpile Overburden
- Excavation and Installation of Augmented SVE/PRGS system
- Upgrade the SVE system
- Install Trench Cap
- Active Phase to achieve SVE shut down criteria

As discussed in the Augmented SVE Trench Construction Plan, the following activities will be implemented to meet the project objectives:

- Mobilization
- Security
- Site Preparation
- Subgrade Preparation
- Stormwater Management Systems
- Installation of Collection Systems
- Structural Fill Placement
- Final Cover Construction
- Topsoil and Revegetation
- Soil Erosion and Sediment pollution Control
- Demobilization of construction personnel

4.0 SSQM Project Organization and Management

Project organization, responsibilities, lines of communication, and reporting procedures to be implemented during the execution of this project are described in the following subsections.

4.1. Project Organizational Chart

Figure 1 includes the SSQM Project Organizational Chart. This report outlines the path of authority for the Project Team for overseeing and implementing the Z-1 Remedy Plan for Enviro-Chem Superfund Site in Zionsville, Indiana. The overall Quality Assurance communication is between the S.Q.C. Manager with the Client and the Project Manager.

4.2. Project Team Responsibilities

The following are descriptions for the HIS Constructors, LLC, personnel for the project and their corresponding responsibilities.

4.2.1. Operations Manager (Off Site), Brian Keeney

The Overall project responsibility for HIS at the senior management level is the Operations Manager who will be on site as needed and will attend project progress meetings periodically. The Operations Manager ensures that the Project Team recognizes the findings, opinions and control of the S.Q.C. Manager.

4.2.2. S.Q.C. Site Manager (On Site), Kieran Hosey

The S.Q.C Site Manager reports directly to the Operations Manager and the S.Q.C. Site Manager and is responsible for the preparation and implementation of the Site Specific Quality Management Plan. The S.Q.C Site Manager will be on site and will be responsible for all preparation and submittal of SSQM reports, other quality related submittals and testing, schedule revisions, reports, inspections and other project related submittals as needed or directed.

4.2.3. S.Q.C Technicians, Craft Foreman and Craft Personnel (On Site as Needed),

All required/present S.Q.C. Technicians, Craft Foreman and Craft Personnel are under the direction of the S.Q.C. Manager. The roles and responsibilities of these personnel to assist the S.Q.C. Manager will in no way impact the overall QC of the Project. The personnel that will assist the S.Q.C. Manager may perform activities such as photo documentation, onsite scale weight collection and Assist the S.Q.C. Manager with "two person" QC activities (i.e., help with transportation of testing equipment and when applicable, work under the "buddy system"). The assistants shall not be responsible for QC inspections, reporting, and submittal preparation and submittal review. The S.Q.C. Manager will be 100% responsible for any assistance requested of site personnel to assist with Q.C. activities.

5.0 Construction Quality Control Program

Following are the primary components that will be enforced for each phase/portion of the Site work when applicable. The components are:

5.1. Documentation

The S.Q.C. Site Manager shall prepare a Daily Activity Report as part of all daily reporting. The reports will include current records, on appropriate forms (when applicable), of quality control operations, inspections and tests performed including the work of suppliers and subcontractors. These records shall include factual evidence that the required inspections or tests have been performed, including but not limited to the following:

- The Date
- Summary of weather conditions
- Summary of locations where construction is occurring
- Summary of work performed on that date with location, description and whom
- Equipment and personnel working on the project
- Sampling performed and personnel conducting sampling acquisition
- Written instructions from S.Q.C. Site Manager for retesting or change of work
- Level of PPE during work performed
- Summary of any meetings held and attendees
- Job safety evaluations stating what is checked, results, corrective action
- Description of all materials used and references or results of testing and documentation
- Contractor's verification statement that equipment, materials an workmanship comply with the contract
- Description of materials received w/statement for acceptability and storage
- Review of submittals with contract reference, whom and action taken
- Calibration and recalibration of test equipment
- Inspection data sheets
- Corrective measures reports
- Acceptance reports
- Impacts to schedule if applicable
- Exceptions reports

5.2. Inspections

The following four phases of inspection will be employed by or under the direction of the S.Q.C. Site Manager for each of the major components of the construction project. At anytime throughout the inspections listed below, any changes in the method of inspection or notice of failures of conformance should be conveyed to all interested parties including, but not limited to, the Operations Manager and the Onsite S.Q.C. Site Manager. The applicable inspections will include a Preparatory Inspection, Follow-up Inspection, Completion Inspection and Post-Construction Care Inspection. Descriptions of each Inspection type are listed in the following subsections.

5.2.1.1. Preparatory Inspection

This inspection performed by the S.Q.C. Site Manager, shall include a review of contract requirements, an assurance that materials and equipment have been approved, and an assurance of providing for required control tests. This inspection shall also include examination of the work area for actual completion of preliminary work and physical check of materials and equipment for conformance to plans, specifications and approved shop drawings or submitted data and determination that required materials are on hand and properly stored. Preparatory inspections will be conducted by the S.Q.C. Site Manager and shall include, but not be limited to the following:

- Review requirements of the Contracted Specifications and Drawings to check for special reports and tests to be made, material certificates and shop drawing requirements.
- Review submittal of all materials and shop drawings necessary for the accomplishment of the Work.
- Check materials against approved samples and tests and assure they conform to the Contractual requirements.
- Check that approved equipment is maintained in satisfactory working order.
- Discuss plans for application and installation of materials with Site Personnel.
- Check handling and storage of all materials and equipment.
- Check that conditional approvals have been complied with.
- Check that work will be done under proper weather conditions. No work will be performed during conditions that will directly affect the quality of the work.
- Check that personnel doing work understand contract requirements, including workmanship and techniques according to the Contracted Specifications.
- Check that the project area is staked-out so that locations of sampling and testing points can be readily discernible.
- A review of the appropriate activity hazard analysis to assure safety requirements are met

5.2.2. Follow-up Inspection

Follow-up inspections shall be performed daily by the S.Q.C. Site Manager to assure continuous contract compliance, including quality assurance and control requirements, throughout the Work. These inspections shall include an examination of workmanship quality, a review of test results, and notation as to defective or damaged materials, omissions, and compliance with dimensional requirements. The follow-up inspections shall include, but no be limited to the following:

- Check that all test results conform to the Contractual requirements
- Check that all materials meet specified Contractual requirements
- Check that defective areas are identified and repair procedures are determined
- Maintain an up to date list of deficiencies including correction dates
- Check all testing equipment and devices for damage or defects
- Check that exposed subgrade, embankments and excavations are protected during construction
- Check that material was placed as per the Contact Specifications and Drawings
- Check for all component-specific elements as specified in this Quality Management Plan

5.2.3. Completion Inspection

At the completion of the work, the S.Q.C. Site Manager shall conduct a joint completion inspection with applicable personnel. The work shall be inspected, quality control records shall be reviewed, and a list shall be developed of work not conforming to Plans and Specifications. This list shall be included in the quality control documentation with an estimated date for correction of each deficiency. A final inspection shall be made to check that deficiencies have been corrected.

5.2.4. Post-Construction Care Inspection

Post-Construction Care is a system of activities and inspections performed to maintain the integrity of components of the constructed systems. This post construction care includes operation management and general maintenance responsibilities. While on the ECC Site the S.Q.C. Site Manager will observe that proper post construction care is provided to protect each component from damage after component completion. Individual post construction care inspection requirements are listed within the individual sections that follow.

5.3. Verification and Peer Review

Verification of the implementation of this plan will be provided through the following mechanisms:

5.3.1. Supervision

All phases of construction will be monitored by trained personnel under the direction of the S.Q.C. Site Manager who is listed in the project organization section of this Plan.

5.3.2. Documentation

Field notes will be maintained under direction of the S.Q.C. Site Manager documenting daily activities, field analysis conduced, and any problems requiring corrective action. Chain-of-Custody forms and laboratory test reports will document laboratory test data. Field equipment will be calibrated at the required frequency to provide quality assurance. Additional documentation includes Daily Activity Reports, Non-Conformance Reports, submittals & reviews and meeting minutes. Upon completion of construction, under the direction of the S.Q.C. Site Manager, a report will be prepared. This report shall include:

- A brief summary of sampling and analytical procedures, noting any deviation from the approved procedures described in Table 1 included under Section 17 of this SSQMP
- A consolidation and summary of HIS Daily Activity Reports
- Analytical results, including detection limits, in tabular format
- An outline of QC practices employed including problems encountered and corrective action taken
- Conclusions and recommendations describing the impact of analytical results on disposal of materials removed from the project site.

6.0 Mobilization/ Site Preparation

The contract plans illustrates the approximate location of support facilities, staging, parking, access roads, loading, etc. that will be initiated during mobilization activities. HIS Constructors, LLC, will mobilize the appropriate equipment and personnel to implement the required tasks within the scheduled timeframe. HIS will mobilize a crew large enough to be divided into smaller crews if necessary to allow multiple tasks to occur simultaneously.

Mobilization and site preparation activities will also include the activities described below.

6.1. Site Security

An existing chain link security fence with locking gates surrounds the project site, as required with the contracted scope of work. This perimeter security fence location is depicted in on the site plans and will be maintained per the Site Specifications and Site Drawings. The intent of the Site Security Fence is to limit Site access to authorized personnel during, before and after work hours. Upon completion of the project, unless directed otherwise, the security fence will remain.

Site visitors will be required to read the HASP and wear the appropriate personal protective equipment (PPE) before entering work areas. All Site visitors will be required to sign the logbook maintained by the HIS Project Superintendent or an assigned Site equivalent.

6.2. Establishment of Work Zones

HIS will establish work zones on the Site prior to commencement of Site activities. The zones will be delineated as appropriate. The C.Q.A. Manager shall perform inspections to determine the effectiveness of work zones and to assure that cross contamination is not occurring. The work zones include the following:

Exclusion Zone:
The exclusion zone will encompass the areas where work is being performed. It will include areas of the Site where personnel may be exposed to Site contaminants or demolition hazards. The exclusion zone may be adjusted in size, as work in a specific area is complete.

Decontamination Zone:
The Decontamination Zone will encompass a designated area outside the exclusion zone where work is being performed. The Decontamination Zone provides a location for all personnel to don the appropriate PPE prior to entering the Exclusion Zone and a location for all personnel to properly doff their impacted PPE for proper storage and/or disposal. The maintenance of the Decontamination zone will be performed to ensure effective usage as a "Decontamination Zone". The location of the Decontamination Zone in relation to the remainder of the Site is displayed within attachment 1 of the Operations Plan.

Support Zone:
The areas outside the Exclusion Zone and Decontamination area will be used as the Support Zone and will include areas for HIS personnel and other site visitors to park vehicles and conduct activities outside of the demolition and Site work areas. The support zone will also act as the area for daily planning, Health and Safety meetings and communication and coordination center for emergency situations.

7.0 Construction Quality Assurance Applications

Following the initial Mobilization and Preparation, HIS will implement the remaining contracted scope of work. The following Table 1 lists out the Site Quality Control applications for various aspects of the project scope:

Table 1: Site Quality Control Applications

Scope of Work	SQC Application
Mobilization and Site Preparation	• Applicable Construction Submittals as required in the Contract Specifications • Verification that work zones and set up activities preserve the integrity of the Site and ensure the safe work practices as intended • Inspection as required in this Plan • Conduct area air monitoring utilizing a PID, CGI and Dust or equivalent to verify the air quality within the designated Non-Hazardous zones • Document and report all findings as described in Section 5.0 of this Plan • Verify existing conditions, grades, slopes, and utility locations
Installation of Erosion Control Measures	• Identify removal and stockpiling areas • Evaluation of existing conditions to enforce the applicable application for control based on Erosion Control Plan • Proper documentation of findings, observations and actions taken • Proper presentation of information and corrective action.
Site Layout	• Determine Surveyor is Accepted • The S.Q.C. Manager and Superintendent shall review layout by Surveyor prior to work starting. • Verification that all control points are clearly marked and reviewed
Strip and Stockpile Overburden	• Verify that all Erosion Control Measures are installed. • Layout Stockpile area for earthen berm to be constructed with material from stripping. • Verify that top 2' of trench stripping is

	placed in earthen berm.
Excavation and Installation of Augmented SVE/PRGS system	• Preparation and distribution of all applicable Construction Submittals perSpecification 02200/02206/02210 • Ensure thorough review, proper Survey locations of elevation and topographic conditions • Monitor Soils being removed from trench and sampling • Verify sounding of trench bottom with Slurry Specialist at approved intervals. • Verify Fresh and In trench slurry testing has been completed and accurate. • Inspect SVE/PRGS pipe installation per specifications. • Inspect backfill placement. • Observe trench excavation elevations and verify documentation • Documentation of all SQC activity, findings and observations • Presentation of SQC activity, findings and observations with daily reporting • As to each trench segment, verify and document each of the cable lengths used in lowering pipe into each trench segment.
Trench Capping	• Preparation and distribution of all applicable Construction Submittals 02200/2210 • Verify Lift thickness, soil characteristics and other observations • Schedule and collect all Geotechnical daily reports • Verify that Geomembrane is placed 1' beyond each side plus the trench width.
Upgrade SVE system and Piping	• Preparation and distribution of all applicable Construction Submittals • Verify that all upgrades are per approved submittals and specifications

8.0 EX SITU Soil Vapor Extraction Cell (If Necessary)

As designated within the Contract Documents, HIS Constructors LLC if necessary will be placing an EX SITU SVE Extraction Cell based on the quantity of soil determined during the Augmented SVE Trench excavation.

8.1. Materials

In order to meet the contracted specifications for the EX SITU SVE Extraction Cell the following materials will be utilized:

- Geomembrane above and below waste soils.
- A 4 inch diameter lateral piping that is slotted within the cell and solid along the alignment to treatment building.
- A 2 inch diameter slotted ambient air inlet piping
- One vapor monitoring point.

8.2. Material Submittals and Delivery

All material previously identified and described shall be approved for use on the site prior to accepting delivery. Approvals are based on the submittals provided and the referenced contract specifications identified.

8.3. Cell Construction

Once cell construction starts the S.Q.C. Manager will verify the following in his reports:

- Sub-grade for geomembrane is acceptable to prevent damage.
- That all SVE piping has been carefully covered to prevent damage.
- Make sure all geomembrane penetrations are checked for leakage.
- That all work is installed per the plan and specifications

9.0 Testing

The S.Q.C. Manager in conjunction with the on-site Health Safety Officer will perform environmental monitoring in accordance with the contract documents to satisfy the Contract Specifications. Table 2. Lists the testing frequency and methods as described within the Site Specific HASP, and Attachment A of this Plan contains the certificates for the laboratories that will perform the Specified analytical testing.

Table 3. Describes the geotechnical testing that will be performed by the HIS local subcontractor PSI.

Table 2: Environmental Monitoring

Combustible Gas Indicator	Prior to initial operation, Periodic during intrusive activities, work beginning in a new work area, changes in weather conditions.
Oxygen Monitor	Prior to initial operation, Periodic during intrusive activities, work beginning in a new work area, changes in weather conditions.
Organic Vapor Analyzer (Photo Ionization Detector)	Prior to initial operation, Periodic during intrusive activities, work beginning in a new work area, changes in weather conditions.
Ambient Dust Monitor	Prior to initial operation, Periodic during intrusive activities, work beginning in a new work area, changes in weather conditions

Table 3: Geotechnical Testing

ASTM D422	Particle Size Analysis of Soils
ASTM D698	Moisture Density Relations of Soils and Soil Aggregate Mixtures Using 5lb Rammer and 12" Drop
ASTM D1557	Moisture Density Relations of Soils and Soil Aggregate Mixtures Using 10lb Rammer and 118" Drop
ASTM D2487	Classification of Soils for Engineering Purposes
ASTM D2922	Density of Soil and Soil Aggregate In Place by Nuclear Methods (Shallow Depth)
ASTM D2974	Test Methods for Moisture, Ash, and Organic Matter of Peat and Other Organic Soils
ASTM D3017	Moisture Content of Soil and Soil Aggregate In Place by Nuclear Methods (Shallow Depth)
ASTM C143-90	Standard Test Method for Slump of Hydraulic Cement Concrete
ASTM D1140-90	Standard Test Method for Amount of Material in Soils Finer Than The #200 Sieve
ASTM D2217-85	Standard Test Methods for Wet Preparation of Soil Samples for Particle Size Analysis and Determination of Soil Constants
ASTM A48	Gray Iron Castings
ASTM A1 85	Welded Deformed Steel Wire Fabric

ASTM C185	Standard Test Method for Air Content of Hydraulic Cement Mortar
ASTM C478	Standard Specification for Precast Reinforced Concrete Manhole Sections
ASTM A615	Deformed and Plain Steel Bars for Concrete Reinforcement
ASTM C923	Resilient Connectors for Reinforced Concrete Manhole Structures and Pipes

ATTACHMENT A
LABORATORY CERTIFICATIONS

PACE ANALYTICAL-QUALITY ASSURANCE MANUAL
STATEMENT OF QUALIFICATIONS

PSI LABORATORY TESTING-STATEMENT OF QUALIFICATIONS (GEOTECHNICAL)

QUALITY ASSURANCE MANUAL

Quality Assurance/Quality Control
Policies and Procedures

Pace Analytical Services – Indianapolis
7726 Moller Road
Indianapolis, IN 46268
(317) 875-5894

CORPORATE APPROVAL

9-21-07

Steve A. Vanderboom
President, CEO
1700 Elm Street SE, Suite 200
Minneapolis, MN 55414
(612) 607-1700

Date

09/21/07

Brad A. Meadows
Director of Quality, Safety, and Technology
1700 Elm Street SE, Suite 200
Minneapolis, MN 55414
(612) 607-1700

Date

© 2002 - 2007 Pace Analytical Services, Inc. This Quality Assurance Manual may not be reproduced, in part or in full, without written consent of Pace Analytical Services, Inc. Whether distributed internally or as a "courtesy copy" to customers or regulatory agencies, this document is considered confidential and proprietary information.

Any printed documents in use within a Pace Analytical Services, Inc. laboratory have been reviewed and approved by the persons listed on the cover page. They can only be deemed official if proper signatures are present.

This is COPY#_____ distributed on _____ by _____ and is _____CONTROLLED or _____UNCONTROLLED.

PACE ANALYTICAL SERVICES – INDIANAPOLIS
LOCAL APPROVAL

This document has been approved as the Quality Assurance Manual, effective _____, as indicated by the following signatures:

Laboratory General Manager (317) 875-5894 extension 119	10-22-07 Date
Laboratory Quality Manager (317) 875-5894 extension 116	9/25/07 Date

Additional Signatures- Technical Directors

Signature	Title	Date
Signature	Title	Date
Signature	Title	Date

Table of Contents

1.0 INTRODUCTION AND ORGANIZATIONAL STRUCTURE 5

1.1 INTRODUCTION TO PASI 5
1.2 STATEMENT OF PURPOSE 5
1.3 QUALITY POLICY STATEMENT AND GOALS OF THE QUALITY SYSTEM 5
1.4 PACE ANALYTICAL SERVICES CORE VALUES 5
1.5 CODE OF ETHICS 6
1.6 STANDARDS OF CONDUCT 6
1.7 LABORATORY ORGANIZATION 7
1.8 LABORATORY JOB DESCRIPTIONS 8
1.9 TRAINING AND ORIENTATION 12
1.10 LABORATORY SAFETY 13
1.11 SECURITY AND CONFIDENTIALITY 13

2.0 SAMPLE CUSTODY 15

2.1 SAMPLING SUPPORT 15
2.2 PROJECT INITIATION 15
2.3 CHAIN-OF-CUSTODY 15
2.4 SAMPLE ACCEPTANCE POLICY 16
2.5 SAMPLE LOG-IN 17
2.6 SAMPLE STORAGE 18
2.7 SAMPLE PROTECTION 19
2.8 SUBCONTRACTING ANALYTICAL SERVICES 19
2.9 SAMPLE RETENTION AND DISPOSAL 20

3.0 ANALYTICAL CAPABILITIES 21

3.1 ANALYTICAL METHOD SOURCES 21
3.2 ANALYTICAL METHOD DOCUMENTATION 21
3.3 ANALYTICAL METHOD VALIDATION 21
3.4 DEMONSTRATION OF CAPABILITY (DOC) 21
3.5 REGULATORY AND METHOD COMPLIANCE 22

4.0 QUALITY CONTROL PROCEDURES 23

4.1 DATA INTEGRITY SYSTEM 23
4.2 METHOD BLANK 23
4.3 LABORATORY CONTROL SAMPLE 24
4.4 MATRIX SPIKE/MATRIX SPIKE DUPLICATE (MS/MSD) 25
4.5 SURROGATES 25
4.6 SAMPLE DUPLICATE 26
4.7 INTERNAL STANDARDS 26
4.8 FIELD BLANKS 26
4.9 TRIP BLANKS 26
4.10 LIMIT OF DETECTION (LOD) 26
4.11 LIMIT OF QUANTITATION (LOQ) 27
4.12 ESTIMATE OF UNCERTAINTY 27
4.13 PROFICIENCY TESTING (PT) STUDIES 27
4.14 ROUNDING AND SIGNIFICANT FIGURES 28

5.0 DOCUMENT MANAGEMENT AND CHANGE CONTROL 30

5.1 DOCUMENT MANAGEMENT 30
5.2 DOCUMENT CHANGE CONTROL 31

6.0 EQUIPMENT AND MEASUREMENT TRACEABILITY 32

6.1 STANDARDS AND TRACEABILITY 32
6.2 GENERAL ANALYTICAL INSTRUMENT CALIBRATION PROCEDURES 32
6.3 SUPPORT EQUIPMENT CALIBRATION PROCEDURES 35
6.4 INSTRUMENT/ EQUIPMENT MAINTENANCE 36

7.0 CONTROL OF DATA 38

7.1 ANALYTICAL RESULTS PROCESSING 38
7.2 DATA VERIFICATION 38
7.3 DATA REPORTING 39
7.4 DATA SECURITY 40
7.5 DATA ARCHIVING 40
7.6 DATA DISPOSAL 40

8.0 QUALITY SYSTEM AUDITS AND REVIEWS 41

8.1 INTERNAL AUDITS 41
8.2 EXTERNAL AUDITS 42
8.3 QUARTERLY QUALITY REPORTS 43
8.4 ANNUAL MANAGERIAL REVIEW 43

9.0 CORRECTIVE ACTION 44

9.1 CORRECTIVE ACTION DOCUMENTATION 44
9.2 CORRECTIVE ACTION COMPLETION 45

10.0 GLOSSARY 47

11.0 REFERENCES 53

12.0 REVISIONS 54

ATTACHMENT I (QC CALCULATIONS) 56

ATTACHMENT IIA (INDIANAPOLIS ORG CHART) 58

ATTACHMENT IIB (CORPORATE ORG CHART) 59

ATTACHMENT III (EQUIPMENT LIST) 60

ATTACHMENT IV (FLOOR PLAN) 61

ATTACHMENT V (SOP LIST) 62

ATTACHMENT VI (CERTIFICATION LIST) 63

ATTACHMENT VII (CHAIN-OF-CUSTODY) 66

ATTACHMENT VIII (CONTAINER PRESERVATION GUIDE) 66

ATTACHMENT IX (EMPLOYEE ROSTER) 67

ATTACHMENT X (NELAC CERTIFICATE AND SCOPE) 69

1.0 INTRODUCTION AND ORGANIZATIONAL STRUCTURE

"Working together to protect our environment and improve our health"

Pace Analytical Services Inc. - Mission Statement

1.1 Introduction to PASI

Pace Analytical Services, Inc. (PASI) is a privately held, full-service analytical testing firm operating a nationwide system of laboratories. PASI offers extensive services beyond standard analytical testing, including: bioassay for aquatic toxicity, air toxics, industrial hygiene testing, explosives, high resolution mass spectroscopy (including dioxins, furans and coplanar PCB's), radiochemical analyses, product testing, pharmaceutical testing, field services and mobile laboratory capabilities. PASI has implemented a consistent Quality System in each of its laboratories and service centers. In addition, the company utilizes an advanced data management system that is highly efficient and allows for flexible data reporting. Together, these systems ensure data reliability and superior on-time performance. This document defines the Quality System and QA/QC protocols.

Our goal is to combine our expertise in laboratory operations with customized solutions to meet the specific needs of our customers.

1.2 Statement of Purpose

To meet the business needs of our customers for high quality, cost-effective analytical measurements and services.

1.3 Quality Policy Statement and Goals of the Quality System

The PASI management is committed to maintaining the highest possible standard of service for our customers by following a documented quality system. The overall objective of this quality system is to provide reliable data through adherence to rigorous quality assurance policies and quality control procedures as documented in this Quality Assurance Manual.

All personnel within the PASI network are required to be familiar with all facets of the quality system and implement these policies and procedures in their daily work. This daily focus on quality is applied with initial project planning, continued through all field and laboratory activities, and is ultimately included in the final report generation.

PASI management demonstrates its commitment to quality by providing the resources, including facilities, equipment and personnel to ensure the adherence to these documented policies and procedures and to promote the continuous improvement of the quality system. All PASI personnel comply with all current applicable state, federal, and industry standards (such as the NELAC and ISO 17025 standards).

1.4 Pace Analytical Services Core Values

- **INTEGRITY**
- **VALUE EMPLOYEES**
- **KNOW OUR CUSTOMERS**
- **HONOR COMMITMENTS**
- **FLEXIBLE RESPONSE TO DEMAND**
- **PURSUE OPPORTUNITIES**
- **CONTINUOUSLY IMPROVE**

1.5 Code of Ethics

PASI's fundamental ethical principles are as follows:

- Each PASI employee is responsible for the propriety and consequences of his or her actions.
- Each PASI employee must conduct all aspects of Company business in an ethical and strictly legal manner, and must obey the laws of the United States and of all localities, states and nations where PASI does business or seeks to do business.
- Each PASI employee must reflect the highest standards of honesty, integrity and fairness on behalf of the Company with customers, suppliers, the public, and one another.

Strict adherence by each PASI employee to this Code of Ethics and to the Standards of Conduct is essential to the continued vitality of PASI.

Failure to comply with the Code of Ethics and Standards of Conduct will result in disciplinary action up to and including termination and referral for civil or criminal prosecution where appropriate. An employee will be notified of an infraction and given an opportunity to explain, as prescribed under current disciplinary procedures.

1.6 Standards of Conduct

1.6.1 Data Integrity

The accuracy and integrity of the analytical results produced at PASI are the cornerstones of the company. Lack of data integrity is an assault on our most basic values and puts PASI and its employees at grave financial and legal risk. Therefore, employees are to accurately prepare and maintain all technical records, scientific notebooks, calculations and databases. Employees are prohibited from making false entries or misrepresentations of data (e.g., dates, calculations, results or conclusions).

Managerial staff must make every effort to ensure that personnel are free from any undue pressures that may affect the quality or integrity of their work; including commercial, financial, over-scheduling and working condition pressures.

1.6.2 Confidentiality

PASI employees must not (directly or indirectly) use or disclose confidential or proprietary information except when in connection with their duties at PASI. This is effective over the course of employment and for a period of two years thereafter.

Confidential or proprietary information, belonging to either PASI and/or its customers, includes but is not limited to test results, trade secrets, research and development matters, procedures, methods, processes and standards, company-specific techniques and equipment, marketing and client information, inventions, materials composition, etc.

1.6.3 Conflict of Interest

PASI employees must avoid situations that might involve a conflict of interest or appear questionable to others. The employee must be careful in two general areas:

- Participation in activities that conflict or appear to conflict with PASI responsibilities.

- Offering or accepting anything that might influence the recipient or cause another person to believe that the recipient may be influenced. This includes bribes, kickbacks or illegal payments.

Employees are not to engage in outside business or economic activity relating to a sale or purchase by the Company. Other questionable activities include service on the Board of Directors of a competing or supplier company, significant ownership in a competing or supplier company, employment for a competing or supplier company or participation in any outside business during the employee's work hours.

1.6.4 Compliance

All employees are required to read, understand and comply with the various components of the standards listed in this document. As confirmation that they understand this responsibility, each employee is required to sign an acknowledgment form annually that becomes part of the employee's permanent record. Employees will be held accountable for complying with the Quality Systems as summarized in the Quality Assurance Manual.

1.7 Laboratory Organization

The PASI Corporate Office centralizes company-wide accounting, business development, financial management, human resources development, information systems, marketing, quality, safety, and training activities. PASI's Director of Quality, Safety & Technology is responsible for assisting the development, implementation and monitoring of quality programs for the company. See Attachment IIB for the Corporate Organizational structure.

Each laboratory within the system operates with local management, but all share common systems and all receive support from the Corporate Office.

A General Manager (GM) supervises each regional laboratory. Some operations may have an Assistant General Manager (AGM) in situations where the General Manager is responsible for multiple laboratory facilities and is not necessarily in the facility on a regular basis. Quality Managers (QM) at each lab report directly to their General Manager (or Assistant General Manager) but receive guidance and direction from the Director of Quality, Safety & Technology.

The General Manager bears the responsibility for the laboratory operations and serves as the final, local authority in all matters. In the absence of the General Manager (and an Assistant General Manager), the Quality Manager serves as the next in command. He or she assumes the responsibilities of the GM until the GM is available to resume the duties of their position. In the absence of the GM and QM, management responsibility of the laboratory is passed to the Technical Director – provided such a position is identified – and then to most senior department manager until the return of the GM or QM. The most senior department manager in charge may include the Client Services Manager or the Administrative Business Manager at the discretion of the General Manager.

A Technical Director who is absent for a period of time exceeding 15 consecutive calendar days shall designate another full-time staff member meeting the qualifications of the technical director to temporarily perform this function. The laboratory General Manager or Quality Manager has the authority to make this designation in the event the existing Technical Director is unable to do so. If this absence exceeds 65 consecutive calendar days, the primary accrediting authority shall be notified in writing.

The Quality Manager has the responsibility and authority to ensure the Quality System is implemented and followed at all times. In circumstances where a laboratory is not meeting the established level of quality or following the policies set for in this Quality Assurance Manual, the Quality Manager has the authority to halt laboratory operations should he or she deem such an action necessary. The QM will immediately communicate the halting of operations to the GM and keep him or her posted on the progress of corrective

actions. In the event the GM and QM are not in agreement as to the need for the suspension, the Chief Operating Officer and Director of Quality, Safety and Technology will be called in to mediate the situation.

Under the direction of the General Manager, the technical staff of the laboratory is generally organized into the following functional groups:

- Organic Sample Preparation
- Wet Chemistry Analysis
- Metals Analysis
- Volatiles Analysis
- Semi-volatiles Analysis
- Radiochemical Analysis
- Product Testing
- Equipment Maintenance
- Microbiology

Appropriate support groups are present in each laboratory. The actual organizational structure for PASI – Indianapolis is listed in Attachment IIA. In the event of a change in General Manager, Quality Manager or Technical Director(s), the laboratory will notify its accrediting authorities and revise the organizational chart in the Quality Assurance Manual (QAM) within 30 days. For changes in Department Managers or Supervisors or other laboratory personnel, no notifications will be sent to the laboratory's accrediting agencies; changes to the organizational chart will be updated during or prior to the annual review process. Changes or additions in these key personnel will also be noted by the additional signatures on the QAM Local Approval page. In any case, the QAM will remain in effect until the next scheduled revision.

1.8 Laboratory Job Descriptions

1.8.1 General Manager

1. Oversees all functions of the operations.
2. Authorizes personnel development including staffing, recruiting, training, workload scheduling, employee retention and motivation.
3. Prepares budgets and staffing plans.
4. Monitors the Quality Systems of the laboratory and advises the Quality Manager accordingly.
5. Ensures compliance with all applicable state, federal and industry standards.

1.8.2 Assistant General Manager / Operations Manager

1. In the absence of the GM, performs all duties as listed above for the General Manager.
2. Oversees the daily production and quality activities of the department.
3. Manages department and works with staff to ensure department objectives are met.
4. Works with other departments to ensure capacity and client expectations are accurately understood and met.
5. Works with General Manager to prepare appropriate budget and staffing plans for the department.
6. Responsible for prioritizing personnel and production activities within the department.
7. Performs formal and informal performance reviews of departmental staff.

1.8.3 Quality Manager

1. Oversees the laboratory Quality Systems while functioning independently from laboratory operations. Reports directly to the General Manager.

2. Monitors Quality Assurance policies and Quality Control procedures to ensure that the laboratory achieves established standards of quality.
3. Maintains records of quality control data and evaluates data quality.
4. Conducts periodic internal audits and coordinates external audits performed by regulatory agencies or client representatives.
5. Reviews and maintains records of proficiency testing results.
6. Maintains the document control system
7. Assists in development and implementation of appropriate training programs.
8. Provides technical support to laboratory operations regarding methodology and project QA/QC requirements.
9. Maintains certifications from federal and state programs.
10. Ensures compliance with all applicable state, federal and industry standards.
11. Maintains the laboratory training records.

1.8.4 Technical Director

1. Monitors the standards of performance in quality assurance and quality control data
2. Monitors the validity of analyses performed and data generated.
3. Reviews tenders, contracts and QAPPs to ensure the laboratory can meet the data quality objectives for any given project
4. Serves as the general manager of the laboratory in the absence of the GM, AGM and QM.
5. Provides technical guidance in the review, development and validation of new methodologies.

1.8.5 Administrative Business Manager

1. Responsible for financial and administrative management for the entire facility.
2. Provides input relative to tactical and strategic planning activities.
3. Organizes financial information so that the facility is run as a fiscally responsible business.
4. Works with staff to confirm that appropriate processes are put in place to track revenues and expenses.
5. Provide ongoing financial information to the General Manager and the management team so they can better manage their business.
6. Utilizes historical information and trends to accurately forecast future financial positions.
7. Works with management to ensure that key measurements (mileposts) are put in place to be utilized for tread analysis—this will include personnel and supply expenses, and key revenue and expense ratios.
8. Works with General Manager to develop accurate budget and track on an ongoing basis.
9. Works with entire management team to submit complete and justified capital budget requests and to balance requests across departments.
10. Works with project management team and administrative support staff to ensure timely and accurate invoicing.

1.8.6 Client Services Manager

1. Oversees all the day to day activities of the Client Services Department which includes Project Management and, possibly, Sample Control.
2. Responsible for staffing and all personnel management related issues for Client Services.
3. Serves as the primary senior consultant to clients on all project related issues such as set up, initiation, execution and closure.
4. Performs or is capable of performing all duties listed for that of Project Manager.

1.8.7 Project Manager

1. Coordinates daily activities including taking orders, reporting data and analytical results.

2. Serves as the primary technical and administrative liaison between customers and PASI.
3. Communicates with operations staff to update and set project priorities.
4. Provides results to customers in the requested format (verbal, hardcopy, electronic, etc.).
5. Works with customers, laboratory staff, and other appropriate PASI staff to develop project statements of work or resolve problems of data quality.
3. Responsible for solicitation of work requests, assisting with proposal preparation and project initiation with customers and maintain client records.
4. Mediation of project schedules and scope of work through communication with internal resources and management.
5. Responsible for preparing routine and non-routine quotations, reports and technical papers.
6. Interfaces between customers and management personnel to achieve client satisfaction.
7. Manages large-scale complex projects.
8. Supervises less experienced project managers and provide guidance on management of complex projects.
6. Arranges bottle orders and shipment of sample kits to customers.
7. Verifies login information relative to project requirements and field sample Chains-of-Custody.

1.8.8 Project Coordinator

1. Responsible for preparation of project specifications and provides technical/project support.
2. Coordinates project needs with other department sections and assists with proposal preparation.
3. Prepares routine proposals and invoicing.
4. Responsible for scanning, copying, assembling and binding final reports.
5. Other duties include filing, maintaining forms, process outgoing mail, maintaining training database and data entry.

1.8.9 Department Manager/Supervisor

1. Oversees the day-to-day production and quality activities of their assign department.
2. Ensures that quality assurance and quality control criteria of analytical methods and projects are satisfied.
3. Assesses data quality and takes corrective action when necessary.
4. Approves and releases technical and data management reports.
5. Ensures compliance with all applicable state, federal and industry standards.

1.8.10 Group Supervisor/Leader

1. Trains analysts in laboratory operations and analytical procedures.
1. Organizes and schedules analyses with consideration for sample holding times.
2. Implements data verification procedures by assigning data verification duties to appropriate personnel.
3. Evaluates instrument performance and supervises instrument calibration and preventive maintenance programs.
4. Reports non-compliance situations to laboratory management including the Quality Manager.

1.8.11 Laboratory Analyst

1. Performs detailed preparation and analysis of samples according to published methods and laboratory procedures.
2. Processes and evaluates raw data obtained from preparation and analysis steps.
3. Generates final results from raw data, performing primary review against method criteria.

4. Monitors quality control data associated with analysis and preparation. This includes examination of raw data such as chromatograms as well as an inspection of reduced data, calibration curves, and laboratory notebooks.
5. Reports data in LIMS, authorizing for release pending secondary approval.
6. Conducts routine and non-routine maintenance of equipment as required.
7. Performs or is capable of performing all duties associated with that of Laboratory Technician.

1.8.12 Laboratory Technician

1. Prepares standards and reagents according to published methods or in house procedures.
2. Performs preparation and analytical steps for basic laboratory methods.
3. Works under the direction of a Laboratory Analyst on complex methodologies.
4. Assists Laboratory Analysts on preparation, analytical or data reduction steps for complex methodologies.
5. Monitors quality control data as required or directed. This includes examination of raw data such as chromatograms as well as an inspection of reduced data, calibration curves, and laboratory notebooks.

1.8.13 Field Technician

1. Prepares and samples according to published methods, PASI Quality Assurance Manual and/or client directed sampling objectives.
2. Capable of the collection of representative environmental or process related air samples.
3. Use computer software to compile, organize, create tables, create graphics and write test reports.
4. Reviews project documentation for completeness, method compliance and contract fulfillment.
5. Train less experienced environmental technicians and provide guidance on sampling and analysis.
6. Responsible for project initiation and contact follow-up.
7. Develop sampling plans and prepare test plan documents.

1.8.14 Field Analyst

1. Analyzes field samples according to published methods, PASI Quality Assurance Manual and/or client directed sampling objectives.
2. Capable of the collection and analysis of representative environmental or process related air samples.
3. Proficient in a variety of analytical tests; specifically on-site gas-phase organic and inorganic compounds by extractive fourier transform infrared spectroscopy (FTIR).
4. Train less experienced staff and provide guidance on FTIR sampling and analysis.
5. Assist in reporting tasks and project management responsibilities.
6. Perform back-up support for manager tasks such as reporting needs and client concerns.

1.8.15 Sample Management Personnel

1. Signs for incoming samples and verifies the data entered on the Chain-of-Custody forms.
2. Enters the sample information into the Laboratory Information Management System (LIMS) for tracking and reporting.
3. Stages samples according to EPA requirements.
4. Assists Project Managers and Coordinators in filling bottle orders and sample shipments.

S

1.8.16 Systems Administrator or Systems Manager

1. Assists with the creation and maintenance of electronic data deliverables (EDDs).
2. Coordinates the installation and use of all hardware, software and operating systems.
3. Performs troubleshooting on all aforementioned systems.
4. Trains new and existing users on systems and system upgrades.
5. Maintains all system security passwords.
6. Maintains the electronic backups of all computer systems.

1.8.17 Safety/Chemical Hygiene Officer

1. Maintains the laboratory Chemical Hygiene Plan.
2. Plans and implements safety policies and procedures.
3. Maintains safety records.
4. Organizes and/or performs safety training.
5. Performs safety inspections and provides corrective/preventative actions.
6. Assists personnel with safety issues (e.g. personal protective equipment).

1.9 Training and Orientation

Each new employee receives a five part orientation: human resources, ethics and data integrity, safety, Quality Systems, and departmental.

The human resources orientation includes benefits, salary, and company policies. All records are stored with Human Resources.

The ethics and data integrity training covers the obligations of each employee to ensure the defensibility of laboratory data. Employees are provided with general policies related to ethics in the laboratory and specific examples of improper practices that are unacceptable in any PASI facility. The employee is trained to make the right decisions with regards to laboratory practices and where to go for answers in circumstances where they may be unclear as to the correct protocol.

The safety orientation includes an in-depth review of the PASI Chemical Hygiene Plan/Safety Plan, which are consistent with the requirements of OSHA's Hazard Communication Program (29 CFR 1910.1200) and other pertinent regulations.

The Quality Systems orientation provides the new employee with information through an introduction to the Quality Assurance Manual and SOPs, acceptable record keeping practices, and the individual's responsibility to data quality. Quality Systems training is reinforced with the new employee as specific topics are covered during the departmental or analytical method training. Quality Systems training will address policies and practices that ensure the quality and defensibility of the analytical data. These topics include but are not limited to traceability of measurements, method calibration, calibration verification, accuracy, precision and uncertainty of measurements, corrective actions, documentation and root cause analysis.

The new employee's Department Supervisor provides the employee with a basic understanding of the role of the laboratory within the structure of PASI and the basic elements of that individual's position.

Supervised training uses the following techniques:

- Hands-on training
- Training checklists
- Lectures and training sessions
- Method-specific training

- Conferences and seminars
- Short courses
- Specialized training by instrument manufacturers
- Proficiency testing programs.

Group Supervisors/Leaders are responsible for providing documentation of training and proficiency for each employee under their supervision. The employee's training file indicates what procedures an analyst or a technician is capable of performing, either independently or with supervision. The files also include documentation of continuing capability (see Section 3.4 for details on Demonstration of Capability requirements). Training documentation files for each person are kept in a central location.

All procedures and training records are maintained and available for review during laboratory audits. These procedures are reviewed/updated annually by lab management. Additional information can be found in SOP **S-IN-Q-153 Training Procedures** or its equivalent revision or replacement.

1.10 Laboratory Safety

It is the policy of PASI to make safety and health an integral part of daily operations and to ensure that all employees are provided with safe working conditions, personal protective equipment, and requisite training to do their work without injury. Each employee is responsible for his/her own safety by complying with established company rules and procedures. These rules and procedures as well as a more detailed description of the employees' responsibilities are contained in the corporate Safety Manual and Chemical Hygiene Plan.

1.11 Security and Confidentiality

Security is maintained by controlled access to laboratory buildings. Exterior doors to laboratory buildings remain either locked or continuously monitored by PASI staff. Keyless door-lock combinations (and computer access codes/logins) are changed whenever employees quit or they are terminated. Posted signs direct visitors to the reception office and mark all other areas as off limits to unauthorized personnel. All visitors to the facility must sign the Visitor's Logbook maintained by the receptionist. A staff member will accompany them during the duration of their stay on the premises unless the GM, QM or TD specify otherwise. In this instance, the staff member will escort the visitor back to the reception area at the end of his/her visit where he/she signs out. The last staff member to leave their department for the day should ensure that all outside access points to that area are secure.

Additional security is provided where necessary, e.g., specific secure areas for sample, data and client report storage, as requested by customers or cases where national security is of concern. These areas are lockable within the facilities, or are in secure offsite storage. Access is limited to specific individuals or their designees. Security of sample storage areas is the responsibility of the Sample Custodian. Security of samples and data during analysis and data reduction is the responsibility of Group Supervisors. Security of client report archives is the responsibility of the Client Services Manager. These secure areas are locked whenever these individuals or their designees are not present in the facility.

Access to designated laboratory sample storage locations is limited to authorized personnel only. Provisions for lock and key access are provided. No samples are to be removed without proper authorization. If requested by client or contract, samples are not to be removed from secure storage areas without filling out the associated internal Chain-of-Custody records.

Standard business practices of confidentiality are applied to all documents and information regarding client analyses. Specific protocols for handling confidential documents are described in PASI SOPs. Additional protocols for internal identification of samples and data by number only are implemented as required under contract-specific Quality Assurance Project Plans (QAPPs).

All information pertaining to a particular client, including national security concerns will remain confidential. Data will be released to outside agencies only with written authorization from the client or where federal or state law requires the company to do so (i.e. federal or state subpoena).

2.0 SAMPLE CUSTODY

2.1 Sampling Support

Each individual PASI laboratory provides shipping containers, sample containers (including applicable chemical preservatives), custody documents, and field quality control samples (e.g., trip blanks) to support field-sampling events. Guidelines for sample container types, preservatives, and holding times for a variety of methods are listed in Attachment VIII. Note that all analyses listed are not necessarily performed at all PASI and there may be additional laboratory analyses performed that are not included in these tables. PASI - Indianapolis may provide pick-up and delivery services to their customers when needed.

2.2 Project Initiation

Prior to accepting new work, the laboratory reviews performance capability. The laboratory establishes that sufficient resources (personnel, equipment capacity, analytical method capability, etc.) are available to complete the required work. The client needs and data quality objectives are defined and appropriate environmental test methods are assured to meet client's requirements by project managers or sales representative. Project Managers review laboratory certifications. Members of the management staff review current instrument capacity, personnel availability and training, analytical procedures capability and projected sample load. Management then informs the sales and client services personnel whether or not the laboratory can accept the new project via written correspondence, email, and/or daily operations meetings.

The laboratory maintains records of all such reviews, including discussions with customers. Routine analytical project documentation of quotes, notes, dates, initials and/or recordings is maintained in a project folder by project management. Conditions for new and more complex contracts are determined by the General Managers and sales representatives. Quality Management is consulted on technical requirements and operations staff provides input on volume capacities. Evidence of these reviews is maintained in the form of awarded Request for Proposals (RFPs), signed quotes or contracts, and a Customer Relationship Management (CRM) database. If a review identifies a potential mismatch between customer requirements and laboratory capabilities and/or capacities, Pace will specify its level of commitment by listing these exceptions to the requirements within the RFP, quote or contract.

2.3 Chain-Of-Custody

A chain-of-custody (COC) (see Attachment VII) document provides the legal documentation of samples from time of collection to completion of analysis. Importance is stressed on completeness of COCs. PASI has implemented Standard Operating Procedures to ensure that sample custody traceability and responsibility objectives are achieved for every project.

Field personnel or client representatives complete a chain-of-custody form for all samples. Samples are received by the laboratory accompanied by these forms.

If sample shipments are not accompanied by the correct documentation, the Sample Receiving department notifies a Project Manager. The Project Manager then obtains the correct documentation/information from the client in order for analysis of samples to proceed.

The sampler is responsible for providing the following information on the chain-of-custody form:

- Client project name
- Project location or number
- Field sample number/identification
- Date and time sampled
- Sample type (matrix)
- Preservative
- Requested analyses
- Sampler signature
- Relinquishing signature
- Date and time relinquished
- Sampler remarks (if applicable)
- Custody Seal Number (if applicable)
- Regulatory Program Designation
- The state where the samples were collected to ensure all applicable state requirements are met
- Turnaround time requested
- Purchase order number

The record is filled out completely and legibly with indelible ink. Errors are corrected by drawing a single line through the initial entry and initialing and dating the change. All transfers of samples are recorded on the chain-of-custody in the "relinquished" and "received by" sections. All information except signatures is printed.

Additional information can be found in SOP *S-ALL-C-001* ***Sample Management*** or its equivalent revision or replacement.

2.4 Sample Acceptance Policy

In accordance with regulatory guidelines, PASI complies with the following sample acceptance policy for all samples received.

If the samples do not meet the sample receipt acceptance criteria outlined below, the laboratory is required to document all non-compliances, contact the client, and either reject the samples or fully document any decisions to proceed with analyses of samples which do not meet the criteria. Any results reported from samples not meeting these criteria are appropriately qualified on the final report.

All samples must:

- Have unique client identification that are clearly marked with durable waterproof labels on the sample containers and that match the chain of custody.
- Have clear documentation on the chain of custody related to the location of the sampling site with the time and date of sample collection.
- Have the sampler's name and signature
- Have the requested analyses clearly marked
- Have clear documentation of any special analysis requirements (data deliverables, etc.);
- Be in appropriate sample containers with clear documentation of the preservatives used.
- Be correctly preserved unless method allows for laboratory preservation.
- Be received within holding time. Any samples with hold times that are exceeded will not be processed without prior client permission.
- Have sufficient sample volume to proceed with the analytical testing. If insufficient sample volume is received, analysis will not proceed without client approval.

- Be received within appropriate temperature ranges - not frozen but ≤6°C (See Note 1), unless program requirements or client contractual obligations mandate otherwise (see Note 2). The cooler temperature is recorded directly on the COC and the SCUR. Samples that are delivered to the lab immediately after collection are considered acceptable if there is evidence that the chilling process has been started, for example by the arrival of the samples on ice. If samples arrive that are not compliant with these temperature requirements, the client will be notified. The analysis will NOT proceed unless otherwise directed by the client. If less than 72 hours remain in the hold time for the analysis, the analysis may be started while the client is contacted to avoid missing the hold time. Data will be appropriately qualified on the final report.

  Note 1: Temperature will be read and recorded based on the precision of the measuring device. For example, temperatures obtained from a thermometer graduated to 0.1°C will be read and recorded to ±0.1°C. Measurements obtained from a thermometer graduate to 0.5°C will be read to ±0.5°C. Measurements read at the specified precision are not to be rounded down to meet the ≤6°C limit (i.e. 6.2°C rounded and recorded as 6°C).

  Note 2: Some microbiology methods allow sample receipt temperatures of up to 10°C. Consult the specific method for microbiology samples received above 6°C prior to initiating corrective action for out of temperature preservation conditions.

Upon sample receipt, the following items are also checked and recorded:

- Presence of custody seals or tapes on the shipping containers
- Sample condition: Intact, broken/leaking
- Sample holding time
- Sample pH when required
- Appropriate containers

Samples for drinking water analysis that are improperly preserved, or are received past holding time, are rejected at the time of receipt, with the exception of VOA samples that are tested for pH at the time of analysis.

Additional information can be found in SOP S-IN-C-001 **Sample Management** or its equivalent revision or replacement.

2.5 Sample Log-in

After sample inspection, all sample information on the chain-of-custody is entered into the Laboratory Information Management System (LIMS).

This permanent record documents receipt of all sample containers including:

- Client name and contact
- Client number
- Pace Analytical project number
- Pace Analytical Project Manager
- Sample descriptions
- Due dates
- List of analyses requested
- Date and time of lab receipt
- Field ID code
- Date and time of collection
- Any comments resulting from inspection for sample rejection

All samples received are logged into the LIMS system within one working day of receipt. Sample login may be delayed due to client clarification of analysis needed, corrective actions for sample receipt non-conformance, or other unusual circumstances. If the time collected for any sample is unspecified and Pace is unable to obtain this information from the customer, the laboratory will use 08:00 as the time sampled. All hold times will be based on this sampling time and qualified accordingly if exceeded.

The Laboratory Information Management System (EPIC Pro) automatically generates a unique identification number for each sample created in the system. The LIMS sample number follows the general convention of 50XXXXYYY; where 50 is the code for Indianapolis, XXXX is the project number (referred to as work order number and YYY is the number of sample in the project. Therefore 504433001 would represent the first sample in project 4433 in the Indianapolis lab. This unique identification number is placed on the sample container as a durable label and becomes the link between the laboratory's sample management system and the client's field identification; it will be a permanent reference number for all future interactions.

Sample labels are printed from the LIMS system and affixed to each sample container.

Samples with hold times that are near expiration date/time may be sent directly to the laboratory for analysis at the discretion of the Project Manager and/or General Manager.

Additional information can be found in SOP **S-IN-C-001 Sample Management** or its equivalent revision or replacement.

2.6 Sample Storage

2.6.1 Storage Conditions

Samples are stored away from all standards, reagents, or other potential sources of contamination. Samples are stored in a manner that prevents cross-contamination (e.g. volatile samples are stored separate from other samples). All sample fractions, extracts, leachates and other sample preparation products are stored in the same manner as actual samples or as specified by the analytical method

2.6.2 Temperature Monitoring

Samples are taken to the appropriate storage location (ambient, refrigerator, freezer) immediately after sample receipt and check-in procedures are completed. All sample storage areas are located in limited access areas and are monitored to ensure sample integrity.

The temperature of each refrigerated storage area is maintained at ≤6°C unless state or program requirements differ. The temperature of each freezer storage area is maintained at <0°C unless state or program requirements differ. The temperature of each storage area is monitored and recorded each workday. If the temperature falls outside the acceptable limits, the following corrective actions are taken and appropriately documented:

- The temperature is rechecked after two hours to verify temperature exceedance. Corrective action is initiated if necessary.
- The Quality Manager and/or laboratory management are notified if the problem persists.
- The samples are relocated to a proper environment if the temperature cannot be maintained after corrective actions are implemented.
- The affected customers are notified.
- Documentation is provided on analytical report.

2.6.3 Hazardous Materials

Pure product or potentially heavily contaminated samples are tagged as "hazardous" or "lab pack" and are stored separately from other samples.

2.6.4 Foreign/Quarantined Soils

Depending on the soil disposal practices of the laboratory, foreign soils and soils from USDA regulated areas are segregated. The USDA requires these samples to be incinerated or sterilized by an approved treatment procedure.

Additional information can be found in SOP **S-IN-C-001 Sample Management** or its equivalent revision or replacement.

2.7 Sample Protection

PASI laboratory facilities are operated under controlled access to ensure sample and data integrity. Visitors must register at the front desk and be properly escorted.

Samples are removed from storage areas by designated personnel and returned to the storage areas, if necessary, immediately after the required sample quantity has been taken.

Upon client request, additional and more rigorous chain-of-custody protocols for samples and data can be implemented. For example, some projects may require complete documentation of sample custody within the secure laboratory.

Additional information can be found in SOP **S-IN-C-001 Sample Management** or its equivalent revision or replacement.

2.8 Subcontracting Analytical Services

Every effort is made to perform chemical analyses for PASI customers within the laboratory that receives the samples. When subcontracting to a laboratory other than the receiving laboratory (inside or outside the PASI network) becomes necessary, a preliminary verbal communication with an appropriate laboratory is undertaken. Customers are notified in writing of the lab's intention to subcontract any portion of the testing to another laboratory. Work performed under specific protocols may involve special considerations.

Prior to subcontracting samples to a laboratory outside Pace Analytical, the potential sub-contract laboratory will be pre-qualified by verifying that the subcontractor meets the following criteria:

- All certifications required for the proposed subcontract are in effect,
- Sufficient professional liability and other required insurance coverage is in effect, and
- Is not involved in legal action by any federal, state, or local government agency for data integrity issues and has not been convicted in such investigation at any time during the past 5 years.

The contact and preliminary arrangements are made between the PASI Project Manager and the appropriate subcontract laboratory personnel. The specific terms of the subcontract laboratory agreement include :

- Method of analysis
- Number and type of samples expected
- Project specific QA/QC requirements
- Deliverables required
- Laboratory certification requirement
- Price per analysis

- Turn around time requirements

Chain-of-custody forms are generated for samples requiring subcontracting to other laboratories. Sample receiving personnel re-package the samples for shipment, create a transfer chain-of-custody form and record the following information:

- Pace Analytical Laboratory Number
- Matrix
- Requested analysis
- Special instructions (quick turn-around, required detection or reporting limits, unusual information known about the samples or analytical procedure).
- Signature in "Relinquished By"

All subcontracted sample data reports are sent to the PASI Project Manager.

Any Pace Analytical work sent to other labs within the PASI network is handled as subcontracted work (also known as inter-regional) and all final reports are labeled clearly with the name of the laboratory performing the work. Any non-NELAC work is clearly identified. PASI will not be responsible for analytical data if the subcontract laboratory was designated by the Client.

Additional information can be found in SOP **S-ALL-Q-017 Subcontracting Samples** or its equivalent revision or replacement.

2.9 Sample Retention and Disposal

Samples (and sample by-products) must be retained by the laboratory for a period of time necessary to protect the integrity of the sample or sample by-product (e.g. method holding time) and to protect the interests of the laboratory and the client.

Unused portions of samples are retained by each laboratory based on program or client requirements for sample retention and storage. The sample retention time is a minimum of 45 days from receipt of the samples. Samples requiring storage beyond this time due to special requests or contractual obligations will not be stored under temperature controlled conditions unless the laboratory has sufficient capacity and their presence does not compromise the integrity of other samples.

After this period expires, non-hazardous samples are properly disposed of as non-hazardous waste.
The preferred method for disposition of hazardous samples is to return the excess sample to the client. If it is not feasible to return samples, or the client requires PASI to dispose of excess samples, PASI will arrange for proper disposal by an approved contractor.

Additional information can be found in SOPs **S-ALL-S-002 Waste Handling** and **S-IN-C-001 Sample Management** or their equivalent revisions or replacements.

3.0 ANALYTICAL CAPABILITIES

3.1 Analytical Method Sources

PASI laboratories are capable of analyzing a full range of environmental samples from a variety of matrices, including air, surface water, wastewater, groundwater, soil, sediment, biota, and other waste products. The latest valid edition of methodologies are applied from regulatory and professional sources including EPA, ASTM, USGS, NIOSH, and State Agencies. Section 11 (References) is a representative listing of general analytical protocol references. PASI discloses in writing to its customers and regulatory agencies any instances in which modified methods are being used in the analysis of samples.

In the event of a client specific need, instrumentation constraint or regulatory requirement, PASI laboratories reserve the right to use valid versions of methods that may not be the most recent edition available.

3.2 Analytical Method Documentation

The primary form of documentation of analytical methods is the Standard Operating Procedure (SOP). SOPs contain pertinent information as to what steps are required by an analyst to successfully perform a procedure. The required contents for the SOPs are specified in the company-wide SOP **S-ALL-Q-001 SOP for Preparation of SOPs.**

The SOPs may be supplemented by other training materials that further detail how methods are specifically performed. This training material will undergo periodic, documented review along with the other Quality System documentation.

3.3 Analytical Method Validation

In some situations, PASI develops and validates methodologies that may be more applicable to a specific problem or objective. When non-standard methods (e.g. methods other than EPA, NIOSH, ASTM, AOAC, etc.) are required for specific projects or analytes of interest, or when the laboratory develops a method, or modifies a standard method, the laboratory validates the method prior to applying it to client samples. Method validity is established by meeting criteria for precision and accuracy as established by the data quality objectives specified by the end user of the data. The laboratory records the validation procedure, the results obtained and a statement as to the usability of the method. The minimum requirements for method validation include determination of the limit of detection and limit of quantitation, evaluation of precision and bias, and evaluation of selectivity of each analyte of interest.

3.4 Demonstration of Capability (DOC)

Analysts complete an initial demonstration of capability (IDOC) study prior to performing a method or when there is a change in instrument type, personnel or test method (when a defined 'work cell' is in operation, the entire work cell must meet the criteria). The mean recovery and standard deviation of each analyte, taken from 4 replicates of a quality control standard is calculated and compared to method criteria (if available) or established lab criteria for evaluation of acceptance. Each laboratory maintains copies of all demonstrations of capability and corresponding raw data for future reference and must document the acceptance criteria prior to the analysis of the DOC. Demonstrations of capability are verified on an annual basis.

For Continuing Demonstrations of Capability, the laboratories may use Performance Testing (PT) samples in lieu of the 4 replicate approach listed above. For methods or procedures that do not lend themselves to the "4 replicate" approach, the demonstration of capability requirements will be specified in Section 14 – Method Performance of the applicable SOP.

3.5 Regulatory and Method Compliance

PASI understands that expectations of our customers commonly include the assumption that laboratory data will satisfy specific regulatory requirements. Therefore PASI attempts to ascertain, prior to beginning a project, what applicable regulatory jurisdiction, agency, or protocols apply to that project. This information is also required on the Chain-of-Custody submitted with samples.

PASI makes every effort to detect regulatory or project plan inconsistencies, based upon information from the client, and communicate them immediately to the client in order to aid in the decision-making process. PASI will not be liable if the client chooses not to follow PASI recommendations.

It is PASI policy to disclose in a forthright manner any detected noncompliance affecting the usability of data produced by our laboratories. The laboratory will notify customers within 30 days of fully characterizing the nature of the nonconformance, the scope of the nonconformance and the impact it may have on data usability.

4.0 QUALITY CONTROL PROCEDURES

4.1 Data Integrity System

The data integrity system at PASI provides assurances to management that a highly ethical approach is being applied to all planning, training and implementation of methods. Data integrity is crucial to the success of our company and Pace Analytical is committed to providing a culture of quality throughout the organization. To accomplish this goal, PASI has implemented a data integrity system that encompasses the following four requirements:

1. A data integrity training program: standardized training is given to each new employee and a yearly refresher is presented to all employees. Key topics within this training include:
   - Need for honesty in analytical reporting
   - Process for reporting data integrity issues
   - Specific examples of unethical behavior and improper practices
   - Documentation of non-conforming data that is still useful to the data user
   - Consequences and punishments for unethical behavior
   - Examples of monitoring devices used by management to review data and systems
2. Signed data integrity documentation for all employees: this includes a written quiz following the Ethics training session and written agreement to abide by the Code of Ethics and Standards of Conduct explained in the employee manual
3. In-depth, periodic monitoring of data integrity: including peer data review and validation, internal data audits, proficiency testing studies, etc.
4. Documentation of any review or investigation into possible data integrity infractions. This documentation, including any disciplinary actions involved, corrective actions taken, and notifications to customers must be available for review for lab assessors and must be retained for a minimum of five years.

PASI management makes every effort to ensure that personnel are free from any undue pressures that affect the quality of their work including commercial, financial, over-scheduling, and working condition pressures.

Corporate management also provides all PASI facilities a mechanism for confidential reporting of data integrity issues that ensures confidentiality and a receptive environment in which all employees are comfortable discussing items of ethical concern. The anonymous message line is monitored by the Corporate Director of Quality, Safety and Technology who will ensure that all concerns are evaluated and, where necessary, brought to the attention of executive management and investigated. **The message line voice mail box is available at 612-607-6427.**

4.2 Method Blank

A method blank is used to evaluate contamination in the preparation/analysis system. The method blank is processed through all preparation and analytical steps with its associated samples.

A method blank is processed at a minimum frequency of 1 per preparation batch. In the case of a method that has no separate preparation step (e.g. volatiles), a method blank is processed with no more than 20 samples of a specific matrix performed by the same analyst, in the same method, using the same standards or reagents.

The method blank consists of a matrix similar to the associated samples that is known to be free of the analytes of interest. Laboratories will characterize a representative matrix as "clean" if the matrix contains contaminants at less than ½ the laboratory's reporting limit.

Each method blank is evaluated for contamination. The source of any contamination is investigated and documented corrective action is taken when the concentration of any target analyte is detected above the reporting limit and is greater then 1/10 of the amount of that analyte found in any associated sample.

Corrective actions include the re-preparation and re-analysis of all the samples (where possible) along with the full set of required quality control samples. Data qualifiers must be applied to any result reported that is associated with a contaminated method blank.

Deviations made from this policy must be approved by the Quality Manager prior to release of the data.

For Ohio VAP projects, the lab must minimize the use of qualified data. In the case of method blank contamination, the lab is required to rerun the associated samples with an acceptable blank (no reportable contamination) if there is sufficient sample remaining. The lab must make every effort to take the appropriate corrective actions and resolve any anomalies regarding method blanks for Ohio VAP projects.

4.3 Laboratory Control Sample

The Laboratory Control Sample (LCS) is used to evaluate the performance of the entire analytical system including preparation and analysis.

An LCS is processed at a minimum frequency of 1 per preparation batch. In the case of a method that has no separate preparation step (e.g. volatiles), an LCS will be processed with no more than 20 samples of a specific matrix performed by the same analyst, in the same method, using the same standards or reagents.

The LCS consists of a matrix similar to the associated samples that is known to be free of the analytes of interest that is then spiked with known concentrations of target analytes.

The LCS contains all analytes specified by a specific method or by the client or regulatory agency. In the absence of specified components, the lab will spike with the following compounds:

- For multi-peak analytes (e.g. PCBs), a representative standard will be processed.
- For methods with long lists of analytes, a representative number of target analytes may be chosen. The following criteria is used to determine the number of LCS compounds used:
    - For methods with 1-10 target compounds, the lab will spike with all compounds
    - For methods with 11-20 target compounds, the lab will spike with at least 10 compounds or 80%, whichever is greater
    - For methods with greater than 20 compounds, the lab will spike with at least 16 compounds.

The LCS is evaluated against the method default or laboratory-derived acceptance criteria. Method default control limits will be used until the laboratory has a minimum of 20 (preferably greater than 30) data points from which to derive internal criteria. See SOP **S-IN-Q-126 QC Limit Generation and Implementation** for specific procedures in producing lab-generated limits. Any compound that is outside of these limits is considered to be 'out of control' and must be qualified appropriately. Any associated sample containing an 'out-of-control' compound must either be re-analyzed with a successful LCS or reported with the appropriate data qualifier.

For LCSs containing a large number of analytes, it is statistically likely that a few recoveries will be outside of control limits. This does not necessarily mean that the system is out of control, and therefore no corrective action would be necessary (except for proper documentation). NELAC has allowed for a minimum number of marginal exceedances, defined as recoveries that are beyond the LCS control limits (3X the standard deviation) but less than the marginal exceedance limits (4X the standard deviation). The number of allowable exceedances depends on the number of compounds in the LCS. If more analyte recoveries exceed the LCS control limits than is allowed (see below) or if any one analyte exceeds the marginal exceedance limits, then the LCS is considered non-compliant and corrective actions are necessary. The number of allowable exceedances is as follows:

- >90 analytes in the LCS- 5 analytes
- 71-90 analytes in the LCS- 4 analytes
- 51-70 analytes in the LCS- 3 analytes
- 31-50 analytes in the LCS- 2 analytes
- 11-30 analytes in the LCS- 1 analyte
- <11 analytes in the LCS- no analytes allowed out)

A matrix spike (MS) can be used in place of a non-compliant LCS in a batch as long as the MS passes the LCS acceptance criteria (this is a NELAC allowance). When this happens, full documentation must be made available to the data user. If this is not allowed by a client or regulatory body, the associated samples must be rerun with a compliant LCS (if possible) or reported with appropriate data qualifiers.

Deviations made from this policy must be approved by the Quality Manager prior to release of the data.

For **Ohio VAP** projects, the lab must minimize the use of qualified data. In the case of LCS failures, the lab is required to rerun the associated samples with an acceptable LCS (all applicable recoveries within acceptable limits) if there is sufficient sample remaining. The lab must make every effort to take the appropriate corrective actions and resolve any anomalies regarding LCSs for Ohio VAP projects.

4.4 Matrix Spike/Matrix Spike Duplicate (MS/MSD)

A matrix spike (MS) is used to determine the effect of the sample matrix on compound recovery for a particular method. The information from these spikes is sample or matrix specific and is not used to determine the acceptance of an entire batch (see LCS).

A **Matrix Spike/Matrix Spike Duplicate** (MS/MSD) set is processed at a frequency specified in a particular method or as determined by a specific client. This frequency will be specified in the applicable method SOP or client QAPP. In the absence of such requirements, an MS/MSD set is routinely analyzed once per every 20 samples per general matrix (i.e. soil, water, biota, etc.) per method.

The MS and MSD consist of the sample matrix that is then spiked with known concentrations of target analytes. Lab personnel spike client samples that are specifically designated as MS/MSD samples or, when no designated samples are present in a batch, randomly select samples to spike that have adequate sample volume or weight. Spiked samples are prepared and analyzed in the same manner as the original samples and are selected from different customers if possible.

The MS and MSD contain all analytes specified by a specific method or by the client or regulatory agency. In the absence of specified components, the lab will spike with the same number of compounds as previously discussed in the LCS section.

The MS and MSD are evaluated against the method or laboratory-derived criteria. Any compound that is outside of these limits is considered to be 'out of control' and must be qualified appropriately. Batch acceptance, however, is based on method blank and LCS performance, not on MS/MSD recoveries. The spike recoveries give the data user a better understanding of the final results based on their site-specific information.

A matrix spike and sample duplicate will be performed instead of a matrix spike and matrix spike duplicate when specified by the client or method.

Deviations made from this policy must be approved by the Quality Manager prior to release of the data.

For **Ohio VAP** projects, the lab must minimize the use of qualified data. In the case of MS/MSD failures, the lab is required to rerun the associated samples only when the associated LCS also fails acceptance criteria and if there is sufficient sample remaining. When an LCS is acceptable and the MS results are

outside of criteria, and no system anomaly is detected, the samples will be qualified as being affected by the sample matrix and the sample data can be reported. The end user can then determine the extent of the matrix effect on their sample results. The lab must make every effort to take the appropriate corrective actions and resolve any anomalies regarding LCSs for Ohio VAP projects.

4.5 Surrogates

Surrogates are compounds that reflect the chemistry of target analytes and are typically added to samples for organic analyses to monitor the effect of the sample matrix on compound recovery.

Surrogates are added to each client sample (for organics), method blank, LCS and MS prior to extraction or analysis. The surrogates are evaluated against the method or laboratory-derived acceptance criteria. Any surrogate compound that is outside of these limits is considered to be 'out of control' and must be qualified appropriately. Samples with surrogate failures are typically re-extracted and/or re-analyzed to confirm that the out-of-control value was caused by the matrix of the sample and not by some other systematic error. An exception to this would be samples that have high surrogate values but no reportable hits for target compounds. These samples would be reported, with a qualifier, because the implied high bias would not affect the final results.

Deviations made from this policy must be approved by the Quality Manager prior to release of the data.

For **Ohio VAP** projects, the lab must minimize the use of qualified data. In the case of surrogate failures, the lab is required to rerun the associated samples to confirm that a matrix effect is present (if there is sufficient sample remaining). The lab must make every effort to take the appropriate corrective actions and resolve any anomalies regarding surrogate failures for Ohio VAP projects.

4.6 Sample Duplicate

A sample duplicate is a second portion of sample that is prepared and analyzed in the laboratory along with the first portion. It is used to measure the precision associated with preparation and analysis. A sample duplicate is processed at a frequency specified by the particular method or as determined by a specific client.

The sample and duplicate are evaluated against the method or laboratory-derived criteria for relative percent difference (RPD). Any duplicate that is outside of these limits is considered to be 'out of control' and must be qualified appropriately.

Deviations made from this policy must be approved by the Quality Manager prior to release of the data.

For **Ohio VAP** projects, the lab must minimize the use of qualified data. In the case of duplicate samples exceeding the RPD criteria, the lab is required to rerun the associated sample and duplicate as long as no sampling error was detected (if there is sufficient sample remaining). If the sample and duplicate still do not agree, a comment would be made stating there is a sample anomaly (i.e. non-homogeneous). The lab must make every effort to take the appropriate corrective actions and resolve any anomalies regarding sample duplicates for Ohio VAP projects.

4.7 Internal Standards

Internal Standards are method-specific analytes added to every standard, method blank, laboratory control sample, matrix spike, matrix spike duplicate, and sample at a known concentration, prior to analysis for the purpose of adjusting the response factor used in quantifying target analytes. At a minimum, the

laboratory will follow method specific guidelines for the treatment of internal standard recoveries as they are related to the reporting of data.

Deviations made from this policy must be approved by the Quality Manager prior to release of the data.

For **Ohio VAP** projects, samples with internal standard failures (outside the method criteria already established for CCV internal standards) must be rerun to confirm sample matrix effect. The lab must make every effort to take the appropriate corrective actions and resolve any anomalies regarding internal standards for Ohio VAP projects.

4.8 Field Blanks

Field blanks are blanks prepared at the sampling site in order to monitor for contamination that may be present in the environment where samples are collected. These field quality control samples are often referenced as field blanks, rinseate blanks, or equipment blanks. The lab analyzes these field blanks as normal samples and informs the client if there are any target compounds detected above the reporting limits.

4.9 Trip Blanks

Trip blanks are blanks that originate from the laboratory as part of the sampling event and are used to monitor for contamination of samples during transport. These blanks accompany the empty sample containers to the field and then accompany the collected samples back to the lab. These blanks are routinely analyzed for volatile methods where ambient background contamination is likely to occur.

4.10 Limit of Detection (LOD)

PASI laboratories are required to use a documented procedure to determine a limit of detection (LOD) for each analyte of concern in each matrix reported. All sample-processing steps of the preparation and analytical methods are included in this determination. For any test that does not have a valid LOD, sample results below the lowest calibration standard cannot be reported.

The LOD is initially established for the compounds of interest for each method in a clean matrix with no target analytes present and no interferences at a concentration that would impact the results. The LOD is then determined every time there is a change in the test method that affects how the test is performed or when there has been a change in the instrument that affects the sensitivity. The LOD is, at a minimum, verified on an annual basis. If required by client or accreditation body, the LOD will be reestablished annually for all applicable methods.

Unless otherwise noted, the method used by PASI laboratories to determine LODs is based on the Method Detection Limit (MDL) procedure outlined in 40 CFR Part 136, Appendix B. Where required by regulatory program or client, the above referenced procedure will be followed.

Additional information can be found in SOP **S-ALL-Q-004 Method Detection Limit Studies** or its equivalent revision or replacement.

For **Ohio VAP** projects, a valid MDL must be in place prior to sample analysis. MDLs must be spiked at least at the reporting limit (not higher).

4.11 Limit of Quantitation (LOQ)

A limit of quantitation (LOQ) for every analyte of concern must be determined. For PASI laboratories, this LOQ is referred to as the PRL, or Pace Reporting Limit. This PRL is based on the lowest calibration standard concentration that is used in each initial calibration. Results below this level are not allowed to be reported without qualification since the results would not be substantiated by a calibration standard.

For methods with a determined LOD, results can be reported out below the LOQ but above the LOD if they are properly qualified (e.g. J flag).

There must be a sufficient buffer between the LOD and the limit of quantitation (LOQ). The LOQ must be higher than the LOD.

To verify the LOQ, the laboratory will prepare a sample in the same matrix used for the LCS. The sample will be spiked with target analytes at the concentration(s) equivalent to or less than the PRL(s). This sample must undergo the routine sample preparation procedure including any routine sample cleanup steps. The sample is then analyzed and the recovery of each target analyte determined. The recovery for each target analyte must meet the laboratories current control limits.

Additional information can be found in SOP **S-ALL-Q-004 Method Detection Limit Studies** or its equivalent revision or replacement.

4.12 Estimate of Uncertainty

PASI laboratories can provide an estimation of uncertainty for results generated by the laboratory. The estimate quantifies the error associated with any given result at a 95% confidence interval. This estimate does not include bias that may be associated with sampling. The laboratory has a procedure in place for making this estimation. In the absence of a regulatory or client specific procedure, PASI laboratories base this estimation on the recovery data obtained from the Laboratory Control Spikes. The uncertainty is a function of the standard deviation of the recoveries multiplied by the appropriate Student's t Factor at 95% confidence.

The measurement of uncertainty is provided only on request by the client, as required by specification or regulation and when the result is used to determine conformance within a specification limit.

4.13 Proficiency Testing (PT) Studies

PASI laboratories participate in the NELAC-defined proficiency testing program. PT samples are obtained from NIST-approved providers and analyzed and reported at a minimum of two times per year for the relevant fields of testing per matrix.

The lab initiates an investigation whenever PT results are deemed 'unacceptable' by the PT provider. All findings and corrective actions taken are reported to the Quality Manager. A corrective action plan (including re-analysis of similar samples) is initiated and this report is sent to the appropriate state accreditation agencies for their review.

PT samples are treated as typical client samples, utilizing the same staff, methods, equipment, facilities, and frequency of analysis. PT samples are included in the laboratory's normal analytical processes and do not receive extraordinary attention due to their nature.

Comparison of analytical results with anyone participating in the same PT study is prohibited prior to the close of the study.

Additional information can be found in SOP **S-ALL-Q-010 PE/PT Program** or its equivalent revision or replacement.

4.14 Rounding and Significant Figures

In general, the PASI laboratories report data to no more than three significant digits. Therefore, all measurements made in the analytical process must reflect this level of precision. In the event that a parameter that contributes to the final result has less than three significant figures of precision, the final result must be reported with no more significant figures than that of the parameter in question.

Rounding

PASI- Indianapolis follows the odd / even guidelines for rounding numbers.

- If the figure following the one to be retained is less than five, that figure is dropped and the retained ones are not changed (with three significant figures, 2.544 is rounded to 2.54).
- If the figure following the one to be retained is greater than five, that figure is dropped and the last retained one is rounded up (with three significant figures, 2.546 is rounded to 2.55).
- If the figure following the one to be retained is five and if there are no figures other than zeros beyond that five, then the five is dropped and the last figure retained is unchanged if it is even and rounded up if it is odd (with three significant figures, 2.525 is rounded to 2.52 and 2.535 is rounded to 2.54).

Significant Digits

PASI- Indianapolis follows the following convention for reporting to a specified number of significant figures. Unless specified by federal, state or local requirements or on specific request by a customer, the laboratory reports:

- Values > 10 – Reported to 3 significant digits
- Values ≤ 10 – Reported to 2 significant digits

5.0 DOCUMENT MANAGEMENT AND CHANGE CONTROL

5.1 Document Management

Additional information can be found in SOP **S-ALL-Q-002 Document Management.**

Pace Analytical Services, Inc. has an established procedure for managing documents that are part of the quality system. The list of managed documents includes, but is not limited to, Standard Operating Procedures, Quality Assurance Manuals, quality policy statements, training documents, work-processing documents, charts, posters, memoranda, notices, forms, software, and any other procedures, tables, plans, etc. that have a direct bearing on the quality system.

A master list of all managed documents is maintained at each facility identifying the current revision status and distribution of the controlled documents. This establishes that there are no invalid or obsolete documents in use in the facility. All documents are reviewed periodically and revised if necessary. Obsolete documents are systematically discarded or archived for audit or knowledge preservation purposes.

Each managed document is uniquely identified to include the date of issue, the revision identification, page numbers, the total number of pages and the issuing authorities. For complete information on document numbering, refer to SOP **S-ALL-Q-003 Document Numbering.**

As an alternative to the hard copy system of controlled documents, secured electronic copies of controlled documents may be maintained on the local or wide-area network (LAN or WAN). These document files must be read-only for all personnel except the Quality Department and system administrator. Other requirements for this system are as follows:

- Electronic documents must be readily accessible to all facility employees.
- Electronic documents must explicitly indicate that copies are not to be printed from the electronic file. All hardcopy SOPs must be obtained from the Quality Assurance Department.

5.1.1 Quality Assurance Manual (QAM)

The Quality Assurance Manual is the company-wide document that describes all aspects of the quality system for PASI. The base QAM template is distributed by the Corporate Quality Department to each of the regional Quality Managers. The regional management personnel modify the necessary and permissible sections of the base template and submit those modifications to the Corporate Director of Quality for review. Once approved and signed by both the CEO and the Director of Quality, the General Manager, Quality Manager and Technical Director(s) sign the Quality Assurance Manual. Each regional Quality Manager is then in charge of distribution to employees, external customers or regulatory agencies and maintaining a distribution list of controlled document copies. The Quality Assurance Manual template is reviewed on an annual basis by all of the PASI Quality Managers and revised accordingly by the Director of Quality, Safety and Technology.

5.1.2 Standard Operating Procedures (SOPs)

SOPs fall into two categories: company-wide documents (starting with the prefix ALL-) and facility-specific documents (starting with the individual facility prefix).

The purpose of the company-wide (ALL) SOPs is to establish policies and procedure that are common and applicable to all PASI facilities. Company-wide (ALL) SOPs are document-controlled by the corporate quality office and signed copies are distributed to each of the regional Quality Managers. The regional management personnel sign the company-wide (ALL) SOPs.

The regional Quality Manager is then in charge of distribution to employees, external customers or regulatory agencies and maintaining a distribution list of controlled document copies.

Regional PASI facilities are responsible for developing facility-specific SOPs applicable to their respective facility. The regional facility develops these facility-specific SOPs based on the corporate-wide (ALL) SOP template. This template is written to incorporate a set of minimum method requirements and PASI best practice requirements. The regional facilities may add to or modify the corporate-wide (ALL) SOP template provided there are no contradictions to the minimum method or best practice requirements. Facility-specific SOPs are controlled by the regional Quality Manager according to the corporate document management policies.

SOPs are reviewed every year at a minimum (a more frequent review may be required by state or federal agencies or customers). A review of the document does not necessarily constitute a re-issue of a new revision. Documentation of this review and any applicable revisions are made in the last section of each SOP. This provides a historical record of all revisions.

All copies of superseded SOPs are removed from general use and the original copy of each SOP is archived for audit or knowledge preservation purposes. This ensures that all PASI employees use the most current version of each SOP and provides the Quality Manager with a historical record of each SOP.

Additional information can be found in SOP **S-ALL-Q-001 Preparation of SOPs** or its equivalent revision or replacement.

For Ohio VAP certification, it is required by the Ohio Administrative Code that the lab must seek Ohio VAP review and approval of all SOPs and modified SOPs prior to implementation.

5.1.3 Other Documentation

Other quality system documents are controlled in a similar manner (i.e. Chemical Hygiene Plan, forms, logbooks, instrument manuals, etc.) by the Quality Manager. Retired copies of all quality system documents are archived for historical purposes.

5.2 Document Change Control

Changes to managed documents are reviewed and approved in the same manner as the original review. Any revision to a document requires the approval of the applicable signatories. After revisions are approved, a revision number is assigned and the previous version of the document is officially retired. Copies may be kept for audit or knowledge preservation purposes.

All controlled copies of the previous document are replaced with controlled copies of the revised document and the superseded copies are destroyed or archived. All affected personnel are advised that there has been a revision and any necessary training is scheduled.

6.0 EQUIPMENT AND MEASUREMENT TRACEABILITY

Each PASI facility is equipped with sufficient instrumentation and support equipment to perform the relevant analytical testing or field procedures performed by each facility. Support equipment includes chemical standards, thermometers, balances, disposable and mechanical pipettes, etc. This section details some of the procedures necessary to maintain traceability and perform proper calibration of instrumentation and support equipment.

6.1 Standards and Traceability

Each PASI facility retains all pertinent information for standards, reagents and chemicals to assure traceability to a national standard. This includes documentation of purchase, receipt, preparation and use.

Upon receipt, all purchased standard reference materials are recorded into a standard logbook or database and assigned a unique identification number. The entries include the facility's unique identification number, the chemical name, manufacturer name, manufacturer's identification numbers, receipt date and expiration date. Vendor's certificates of analysis for all standards, reagents, or chemicals are retained for future reference.

Subsequent preparations of intermediate or working solutions are also documented in a standard logbook or database. These entries include the stock standard name and lot number, the manufacturer name, the solvents used for preparation, the solvent lot number and manufacturer, the preparation steps, preparation date, expiration dates, preparer's initials, and a unique PASI identification number. This number is used in any applicable sample preparation or analysis logbook so the standard can be traced back to the standard preparation record. This process ensures traceability back to the national standard.

All prepared standard or reagent containers include the PASI identification number, the standard or chemical name, the date of preparation, the date of expiration, the concentration with units, and the preparer's initials. This ensures traceability back to the standard preparation logbook.

If a second source standard is required to verify an existing calibration or spiking standard, this standard is purchased from a different supplier. If no second source is available, a second standard from a different lot may be purchased from the same supplier if the lot can be demonstrated as prepared independently from other lots.

Additional information concerning standards and reagent traceability can be found in the SOP S-IN-P-009 **Standard and Reagent Preparation and Traceability** or its equivalent revision or replacement.

6.2 General Analytical Instrument Calibration Procedures

All types of support equipment and instrumentation are calibrated or checked before use to ensure proper functioning and verify that the laboratory's requirements are met. All calibrations are performed by, or under the supervision of, an experienced analyst at scheduled intervals against either certified standards traceable to recognized national standards or reference standards whose values have been statistically validated.

Calibration standards for each parameter are chosen to establish the linear range of the instrument and must bracket the concentrations of those parameters measured in the samples. The lowest calibration standard is the lowest concentration for which quantitative data may be reported. Data reported below this level is considered to have less certainty and must be reported using appropriate data qualifiers (e.g. J flag) or explained in a narrative. The highest calibration standard is the highest concentration for which quantitative data may be reported. Data reported above this level is considered to have less certainty and must be reported using appropriate data qualifiers (e.g. E flag) or explained in the narrative. Any specific method requirement for number and type of calibration standards supersedes the general requirement. Instrument and method specific calibration criteria are explained within the specific analytical standard operating procedures for each facility.

Instrumentation or support equipment that cannot be calibrated to specification or is otherwise defective is clearly labeled as out-of-service until it has been repaired and tested to demonstrate it meets the laboratory's specifications. All repair and maintenance activities including service calls are documented in the maintenance log. Equipment sent off-site for calibration testing is packed and transported to prevent breakage and is in accordance with the calibration laboratory's recommendations.

In the event that recalibration of a piece of test equipment casts doubt on the validity of test results already transmitted to the client, the client is notified in writing by the laboratory within 3 business days from the time of discovery. This allows for sufficient investigation and review of documentation to determine the impact on the analytical results. Instrumentation found to be consistently out of calibration is either repaired and positively verified or replaced.

Raw data records are retained to document equipment performance. Sufficient raw data is retained to reconstruct the instrument calibration and explicitly connect the continuing calibration verification to the initial calibration.

6.2.1 General Organic Calibration Procedures

Calibration standards are prepared at a minimum of five concentrations for organic analyses. Results from all calibration standards must be included in constructing the calibration curve with the following exceptions:

- The lowest level calibration standard may be removed from the calibration as long as the remaining number of concentration levels meets the minimum established by the method and standard operating procedure. For multi-parameter methods, this may be done on an individual analyte basis. The reporting limit must be adjusted to the lowest concentration included in the calibration curve.
- The highest level calibration standard may be removed from the calibration as long as the remaining number of concentration levels meets the minimum established by the method and standard operating procedure. For multi-parameter methods, this may be done an individual analyte basis. The upper limit of quantitation must be adjusted to the highest concentration included in the calibration curve.
- Multiple points from either the high end or the low end of the calibration curve may be excluded as long as the remaining points are contiguous in nature and the minimum number of levels remains as established by method or standard operating procedure. The reporting limit or quantitation range, which is appropriate, must be adjusted accordingly.
- Results from a concentration level between the lowest and highest calibration levels can be excluded from the calibration curve for an acceptable cause with approval from the responsible department supervisor if the results for all analytes are excluded and the point is replaced by re-analysis. Re-analysis must occur within the same 12 hour tune time period for GC/MS methodologies and within 8 hours of the initial analysis for non-GC/MS methodologies. All samples analyzed prior to the re-analyzed calibration curve point must be re-analyzed after the calibration curve is completed.

Initial calibration curves are evaluated against appropriate statistical models as required by the analytical methods. Curves that do not meet the appropriate criteria require corrective action that may include re-running the initial calibration curve. All initial calibrations are verified with a standard obtained from a second manufacturer or second lot from the same manufacturer if the lot can be demonstrated as prepared independently from other lots prior to the analysis of samples. Sample results are quantitated from the initial calibration unless otherwise required by regulation, method, or program.

The calibration curve is periodically verified by the analysis of a mid-level continuing calibration verification (CCV) standard during the course of sample analysis. Calibration verification is performed at the beginning and end of each analytical batch (except if an internal standard is used

only one verification at the beginning of the batch is needed), whenever it is expected that the analytical system may be out of calibration, if the time period for calibration has expired, or for analytical systems that contain a calibration verification requirement. This verification standard must meet acceptance criteria in order for sample analysis to proceed.

In the event that the CCV does not meet the acceptance criteria, a second CCV may be injected as part of the diagnostic evaluation and corrective action investigation. If the second CCV is acceptable, the analytical sequence is continued. If both CCVs fail, the analytical sequence is terminated. All samples analyzed since the last compliant CCV are re-analyzed for methodologies utilizing external calibration.

When instruments are operating unattended, the autosamplers may be programmed to inject consecutive CCVs as a preventative measure against CCV failure with no corrective action. In this case, both CCVs must be evaluated to determine potential impact to the results. A summary of the decision tree and necessary documentation are listed below:

- If both CCVs meet the acceptance criteria, the analytical sequence is allowed to continue without corrective action. (The 12 hour clock begins with the injection of the second CCV.)
- If the first CCV does not meet the acceptance criteria and the second CCV is acceptable, the analytical sequence is continued and the results are reported.
- If the first CCV meets the acceptance criteria and the second CCV is out of control, the samples preceded by the out of control CCV must be re-analyzed in a compliant analytical sequence.
- If both CCVs are out of control, all samples since the last acceptable CCV must be re-analyzed in a compliant analytical sequence.

Some analytical methods require that samples be bracketed by passing CCVs analyzed both before and after the samples. This is specific to each method but, as a general rule, all external calibration methods require bracketing CCVs. *Most internal standard calibrations do not* require bracketing CCVs.

Some analytical methods require verification based on a time interval; some methods require a frequency based on an injection interval. The type and frequency of the calibration verifications is dependent on both the analytical method and possibly on the quality program associated with the samples. The type and frequency of calibration verification will be documented in the method specific SOP employed by each laboratory.

For **Ohio VAP** projects, the lab must minimize the use of qualified data. In the case of calibration verification standard failures, the lab is required to rerun the CCV and the associated samples so as not to report qualified data (sample data may only be reported if the failure produces a high bias and the samples are non-detect). The lab must make every effort to take the appropriate corrective actions and resolve any anomalies regarding calibration verification standard failures for Ohio VAP projects.

6.2.2 General Inorganic Calibration Procedures

The instrument is initially calibrated with standards at multiple concentrations to establish the linearity of the instrument's response. A calibration blank is also included. Initial calibration curves are evaluated against appropriate statistical models as required by the analytical methods. The number of calibration standards used depends on the specific method criteria or client project requirements, although normally a minimum of three standards is used.

The ICP and ICP/MS can be standardized with a zero point and a single point calibration if:

- Prior to analysis, the zero point and the single point calibration are analyzed and a linear range is established,

- Zero point and single point calibration standards are analyzed with each batch
- A standard corresponding to the LOQ is analyzed with the batch and meets the established acceptance criteria
- The linearity is verified at the frequency established by the method or manufacturer.

All initial calibrations are verified with a standard obtained from a second manufacturer or second lot from the same manufacturer if the lot can be demonstrated as prepared independently from other lots prior to the analysis of samples. Sample results are quantitated from the initial calibration unless otherwise required by regulation, method, or program.

During the course of analysis, the calibration curve is periodically verified by the analysis of calibration verification standards. A calibration verification standard is analyzed within each analytical batch at method/program specific intervals to verify that the initial calibration is still valid. The CCV is also analyzed at the end of the analytical batch.

A calibration blank is also run with each calibration verification standard to verify the cleanliness of the system. All reported results must be bracketed by acceptable CCVs. Instrument and method specific calibration acceptance criteria are explained within the specific analytical standard operating procedures for each facility.

Interference check standards are also analyzed per method requirements and must meet acceptance criteria for metals analyses.

6.3 Support Equipment Calibration Procedures

All support equipment is calibrated or verified at least annually using NIST traceable references over the entire range of use. The results of calibrations or verifications must be within the specifications required or the equipment will be removed from service until repaired. The laboratory maintains records to demonstrate the correction factors applied to working thermometers.

Prior to use on each working day, balances, ovens, refrigerators, freezers, and water baths are checked in the expected use range with NIST traceable references in order to ensure the equipment meets laboratory specifications.

6.3.1 Analytical Balances

Each analytical balance is checked and (if necessary) calibrated annually by a qualified service technician. The calibration of each balance is checked each day of use with weights traceable to NIST. Calibration weights are ASTM Class 1 (replaces Class S designation) and are re-certified annually against a NIST traceable reference. Some accrediting agencies may require more frequent checks. If balances are calibrated by an external agency, verification of their weights must be provided. All information pertaining to balance maintenance and calibration is recorded in the individual balance logbook and/or is maintained on file in the Quality department.

6.3.2 Thermometers

Certified, or reference, thermometers are maintained for checking calibration of working thermometers. Reference thermometers are provided with NIST traceability for initial calibration and are re-certified, at a minimum, yearly with equipment directly traceable to NIST.

Working thermometers are compared with the reference thermometers annually according to corporate metrology procedures. Each thermometer is individually numbered and assigned a correction factor based on the NIST reference source. In addition, working thermometers are visually inspected by laboratory personnel prior to use and temperatures are documented.

Laboratory thermometer inventory and calibration data are maintained in the Quality department.

6.3.3 pH/Electrometers

The meter is calibrated before use each day, and once after each four hours of continuous use using fresh buffer solutions.

6.3.4 Spectrophotometers

During use, spectrophotometer performance is checked at established frequencies in analysis sequences against initial calibration verification (ICV) and continuing calibration verification (CCV) standards.

6.3.5 Mechanical Volumetric Dispensing Devices

Mechanical volumetric dispensing devices including bottle top dispensers, pipettes, and burettes, excluding Class A volumetric glassware, are checked for accuracy on a quarterly basis. The accuracy of glass microliter syringes is verified and documented prior to use.

Additional information regarding calibration and maintenance of laboratory support equipment can be found in SOP **S-ALL-Q-013 Support Equipment.**

6.4 Instrument/ Equipment Maintenance

The objectives of the Pace Analytical maintenance program are twofold: to establish a system of instrument care that maintains instrumentation and equipment at required levels of calibration and sensitivity, and to minimize loss of productivity due to repairs.

The Laboratory Operations Manager and department manager/supervisors are responsible for providing technical leadership to evaluate new equipment, solve equipment problems and coordinate instrument repair and maintenance. The analysts have a primary responsibility to perform routine maintenance.

To minimize downtime and interruption of analytical work, preventative maintenance is routinely performed on each analytical instrument. Up-to-date instructions on the use and maintenance of equipment are available to staff in the department where the equipment is used.

Department manager/supervisors are responsible for maintaining an adequate inventory of spare parts required to minimize equipment downtime. This inventory includes parts and supplies that are subject to frequent failure, have limited lifetimes, or cannot be obtained in a timely manner should a failure occur.

All major equipment and instrumentation items are uniquely identified to allow for traceability. Equipment/instrumentation are, unless otherwise stated, identified as a system and not as individual pieces. The laboratory maintains equipment records that include the following:

- The name of the equipment and its software
- The manufacturer's name, type, and serial number
- Approximate date received and date placed into service
- Current location in the laboratory
- Condition when received (new, used, etc.)
- Copy of any manufacturer's manuals or instructions
- Dates and results of calibrations and next scheduled calibration (if known)
- Details of past maintenance activities, both routine and non-routine
- Details of any damage, modification or major repairs

All instrument maintenance is documented in maintenance logbooks that are assigned to each particular instrument or system.

When maintenance is performed to repair an instrument problem, depending on the initial problem, demonstration of return to control may be satisfied by the successful analysis of a reagent blank or continuing calibration standard. The entry must include a summary of the results of that analysis and verification by the analyst that the instrument has been returned to an in-control status. In addition, each entry must include the initials of the analyst making the entry, the dates the maintenance actions were performed, and the date the entry was made in the maintenance logbook, if different from the date(s) of the maintenance.

Any equipment that has been subjected to overloading or mishandling, or that gives suspect results, or has been shown to be defective, is taken out of service and clearly identified. The equipment shall not be used to analyze client samples until it has been repaired and shown to perform satisfactorily.

7.0 CONTROL OF DATA

Analytical results processing, verification and reporting are procedures employed that result in the delivery of defensible data. These processes include, but are not limited to, calculation of raw data into final concentration values, review of results for accuracy, evaluation of quality control criteria and assembly of technical reports for delivery to the data user.

All analytical data undergo a well-defined, well-documented multi-tier review process prior to being reported to the customer. This section describes procedures used by PASI for translating raw analytical data into accurate, final sample reports and PASI data storage policies.

7.1 Analytical Results Processing

When analytical, field, or product testing data is generated, it is either recorded in a bound laboratory logbook (e.g. Run log or Instrument log) or copies of computer-generated printouts are appropriately labeled and filed. These logbooks and other laboratory records are kept in accordance with each facility's Standard Operating Procedure for documentation storage and archival.

The primary analyst is responsible for initial data reduction and review. This includes confirming compliance with required methodology, verifying calculations, evaluating quality control data, noting discrepancies in logbooks and as footnotes or narratives, and uploading analytical results into the LIMS.

The primary analyst then compiles the initial data package for verification. This compilation must include sufficient documentation for data review. It may include standard calibrations, chromatograms, manual integration documentation, electronic printouts, chain-of-custody forms, and logbook copies.

Some agencies or customers require different levels of data reporting. For these special levels, the primary analyst may need to compile additional project information, such as initial calibration data or extensive spectral data, before the data package proceeds to the verification step.

7.2 Data Verification

Data verification is the process of examining data and accepting or rejecting it based on pre-defined criteria. This review step is designed to ensure that reported data are free from calculation and transcription errors, that quality control parameters are evaluated and that any discrepancies are properly documented.

Analysts performing the analysis and subsequent data reduction have primary responsibility for quality of the data produced. The primary analyst initiates the data verification process by reviewing and accepting the data, provided QC criteria have been met for the samples being reported. Data review checklists are used to document the data review process. The primary analyst is responsible for the initial input of the data into the LIMS.

The completed data package is then sent to a designated qualified reviewer (this cannot be the primary analyst). The following criteria have been established to qualify someone as a data reviewer. To performed secondary data reviewer, one must:

1. Have a current Demonstration of Capability (DOC) study on file.[See Note]
2. Have a DOC on file for a similar method/technology (i.e. GC/MS) and they have an SOP Acknowledgment form on file for the method/procedure being reviewed.[See Note]
3. Supervise or manage a Department and have an SOP Acknowledgment form on file for the method/procedure being reviewed.
4. Have significant background in the department/methods being reviewed through education or experience and have an SOP Acknowledgment form on file for the method/procedure being reviewed

Note: Secondary reviewer status must be approved personally by the Quality Manager or General Manager in the event that this person has no prior experience on the specific method or general technology (i.e. GC/MS).

This reviewer provides an independent technical assessment of the data package and technical review for accuracy according to methods employed and laboratory protocols. This assessment involves a quality control review for use of the proper methodology and detection limits, compliance to quality control protocol and criteria, presence and completeness of required deliverables, and accuracy of calculations and data quantitation. The reviewer also validates the data entered into the LIMS.

Once the data have been technically reviewed and approved, authorization for release of the data from the analytical section is indicated by initialing and dating the data review checklist or otherwise initialing and dating the data. The Operations or Project Manager examines the report for method appropriateness, detection limits and QC acceptability. Any deviations from the referenced methods are checked for documentation and validity, and QC corrective actions are reviewed for successful resolution.

Prior to the release of the report, the Project Manager uses a program known as Data Checker to display warnings or errors. Warnings are items brought to the attention of the Project Manager (such as surrogate values outside of acceptance limits) so the Project Manager can verify that the report has been qualified/footnoted properly. Errors normally require some form of corrective action by lab personnel (such as compounds missing from a multi-analyte report, QC limits missing, etc.). Results of the Data Checker program are filed with each report folder.

7.3 Data Reporting

All data segments pertaining to a particular PASI project number are delivered to the Client Services Department (Project Manager) for assembly into the final report. All points mentioned during technical and QC reviews are included in a case narrative if there is potential for data to be impacted.

Final reports are prepared according to the level of reporting required by the client. A standard PASI final report consists of the following components:

1. A title which designates the report as "Final Report", "Laboratory Results", "Certificate of Results", etc.
2. Name and address of laboratory (or subcontracted laboratories, if used).
3. Phone number and name of laboratory contact where questions can be referred.
4. A unique number for the report (project number). The pages of the report shall be numbered and a total number of pages shall be indicated (usually in the cover letter).
5. Name and address of client and name of project (if applicable).
6. Unique identification of samples analyzed (including client sample numbers).
7. Identification of any sample that did not meet acceptable sampling requirements (from NELAC or other governing agency), such as improper sample containers, holding times missed, sample temperature, etc.
8. Date and time of collection of samples, date of sample receipt by the laboratory, dates of sample preparation and analysis, and times of sample preparation and analysis when the holding time for either is 72 hours or less.
9. Identification of the test methods used.
10. Identification of sampling procedures if sampling was conducted by the laboratory.
11. Deviations from, additions to, or exclusions from the test methods. These can include failed quality control parameters, deviations caused by the matrix of the sample, etc., and can be shown as a case narrative or as defined footnotes to the analytical data.
12. Identification of whether calculations were performed on a dry or wet-weight basis.
13. Reporting limits used.
14. Final results or measurements, supported by appropriate chromatograms, charts, tables, spectra, etc.
15. A signature and title of person accepting responsibility for the content of the report (can be an equivalent electronic identification) and date report was issued.
16. A statement clarifying that the results of the report relate only to the samples tested or to the samples as they were received by the laboratory.

17. If necessary, a statement indicating that the report must not be reproduced except in full, without the written approval of the laboratory.
18. Identification of all test results provided by a subcontracted laboratory or other outside source.
19. Identification of results obtained outside of quantitation levels.

Any changes made to a final report shall be designated as "Revised" or equivalent wording. The laboratory must keep sufficient archived records of all lab reports and revisions. For higher levels of data deliverables, a copy of all applicable raw data is sent to the client along with a final report of results. When possible, the PASI facility will provide electronic data deliverables (EDD) as required by contracts or upon client request.

Client data that requires transmission by telephone, telex, facsimile or other electronic means undergoes appropriate steps to preserve confidentiality.

7.4 Data Security

All data including electronic files, logbooks, extraction/digestion/distillation worksheets, calculations, project files and reports, and other information used to produce the technical report are maintained secured and retrievable by the PASI facility.

7.5 Data Archiving

All records compiled by PASI are maintained legible and retrievable and stored secured in a suitable environment to prevent loss, damage, or deterioration by fire, flood, vermin, theft, and/or environmental deterioration. Records are retained for a minimum of five years unless superseded by federal, state, contractual, and/or accreditation requirements. These records may include, but are not limited to, client data reports, calibration and maintenance of equipment, raw data from instrumentation, quality control documents, observations, calculations and logbooks. These records are retained in order to provide for possible historical reconstruction including sampling, receipt, preparation, analysis and personnel involved. NELAP-related records will be made readily available to accrediting authorities. Access to archived data is documented and controlled by the Quality Manager or a designated Data Archivist.

Records that are computer-generated have either a hard copy or electronic write-protected backup copy. Hardware and software necessary for the retrieval of electronic data is maintained with the applicable records. Archived electronic records are stored protected against electronic and/or magnetic sources.

In the event of a change in ownership, accountability or liability, reports of analyses performed pertaining to accreditation will be maintained by the acquiring entity for a minimum of five years. In the event of bankruptcy, laboratory reports and/or records will be transferred to the client and/or the appropriate regulatory entity upon request.

7.6 Data Disposal

Data that has been archived for the facility's required storage time may be disposed of in a secure manner by shredding, returning to customer, or utilizing some other means that does not jeopardize data confidentiality. Records of data disposal will be archived for a minimum of five years unless superseded by federal, contractual, and/or accreditation requirements.

8.0 QUALITY SYSTEM AUDITS AND REVIEWS

8.1 Internal Audits

8.1.1 Responsibilities

The Quality Manager is responsible for designing and/or conducting internal audits in accordance with a predetermined schedule and procedure. Since internal audits represent an independent assessment of laboratory functions, the auditor must be functionally independent from laboratory operations to ensure objectivity. The auditor must be trained, qualified and familiar enough with the objectives, principles, and procedures of laboratory operations to be able to perform a thorough and effective evaluation. The Quality Manger evaluates audit observations and verifies the completion of corrective actions. In addition, a periodic corporate audit will be conducted by the Director of Quality, Safety & Technology and/or designee. The corporate audits will focus on the execution of the Quality System as outlined in this manual but may also include other quality programs applicable to each laboratory.

8.1.2 Scope and Frequency of Internal Audits

Internal systems audits are conducted yearly at a minimum. The scope of these audits includes evaluation of specific analytical departments or a specific quality-related system as applied throughout the laboratory.

Examples of system-wide elements that can be audited include:

- Quality Systems documents, such as Standard Operating Procedures, training documents, Quality Assurance Manual and all applicable addenda
- Personnel and training files.
- General laboratory safety protocols.
- Chemical handling practices, such as labeling of reagents, solutions, standards, and associated documentation.
- Documentation concerning equipment and instrumentation, calibration/maintenance records, operating manuals.
- Sample receipt and management practices.
- Analytical documentation, including any discrepancies and corrective actions.
- General procedures for data security, review, documentation, reporting and archiving.
- Data integrity issues such as proper manual integrations.

When the operations of a specific department are evaluated, a number of additional functions are reviewed including:

- Detection limit studies
- Internal chain-of-custody documentation
- Documentation of standard preparations
- Quality Control limits and Control charts.

Certain projects may require an internal audit to ensure laboratory conformance to site work plans, sampling and analysis plans, QAPPs, etc.

A representative number of data audits are completed annually. The report format of any discrepancy is similar to that of other internal audits.

The laboratory, as part of their overall internal audit program, ensures that a review is conducted with respect to any evidence of inappropriate actions or vulnerabilities related to data integrity. Discovery of potential issues are handled in a confidential manner until such time as a follow up evaluation, full investigation, or other appropriate actions are completed and the issues clarified. All investigations that result in finding of inappropriate activity are documented and include any disciplinary actions involved, corrective actions taken, and all appropriate notifications of customers.

8.1.3 Internal Audit Reports and Corrective Action Plans

Additional information can be found in SOP **S-IN-Q-154 Audits and Inspections.**

A full description of the audit, including the identification of the operation audited, the date(s) on which the audit was conducted, the specific systems examined, and the observations noted are summarized in an internal audit report. Although other personnel may assist with the performance of the audit, the Quality Manager writes and issues the internal audit report identifying which audit observations are deficiencies that require corrective action.

When audit findings cast doubt on the effectiveness of the operations or on the correctness of validity of the laboratory's environmental test results, the laboratory will take timely corrective action and notify the client in writing within 3 business days, if investigations show that the laboratory results may have been affected.

Once completed, the internal audit report is issued jointly to the Laboratory General Manager and the manager(s)/supervisor(s) of the audited operation at a minimum. The responsible manager(s)/supervisor(s) responds within 14 days with a proposed plan to correct all of the deficiencies cited in the audit report. The Quality Manager may grant additional time for responses to large or complex deficiencies (not to exceed 30 days). Each response must include timetables for completion of all proposed corrective actions.

The Quality Manager reviews the audit responses. If the response is accepted, the Quality Manager uses the action plan and timetable as a guideline for verifying completion of the corrective action(s). If the Quality Manager determines that the audit response does not adequately address the correction of cited deficiencies, the response will be returned for modification.

To complete the audit process, the Quality Manager performs a re-examination of the areas where deficiencies were found to verify that all proposed corrective actions have been implemented. An audit deficiency is considered closed once implementation of the necessary corrective action has been verified. If corrective action cannot be verified, the associated deficiency remains open until that action is completed.

8.2 External Audits

PASI laboratories are audited regularly by regulatory agencies to maintain laboratory certifications, and by customers to maintain appropriate specific protocols.

Audit teams external to the company review the laboratory to assess the existence of systems and degree of technical expertise. The Quality Manager and other QA staff host the audit team and assist in facilitation of the audit process. Generally, the auditors will prepare a formalized audit report listing deficiencies observed and follow-up requirements for the laboratory. In some cases, items of concern are discussed during a debriefing convened at the end of the on-site review process.

The laboratory staff and supervisors develop corrective action plans to address any deficiencies with the guidance of the Quality Manager. The Laboratory General Manager provides the necessary resources for staff to develop and implement the corrective action plans. The Quality Manager collates this information

and provides a written report to the audit team. The report contains the corrective action plan and expected completion dates for each element of the plan. The Quality Manager follows-up with the laboratory staff to ensure corrective actions are implemented.

8.3 Quarterly Quality Reports

The Quality Manager is responsible for preparing a quarterly report to management summarizing the effectiveness of the laboratory Quality Systems. This status report will include:

- Results of internal systems or performance audits
- Corrective action activities
- Discussion of QA issues raised by customers
- Results of third party or external audits
- Status of laboratory certifications
- Proficiency Testing Study Results
- Results of internal laboratory review activities
- Summary of holding time violations
- Method detection limit study status
- Training activity summary
- SOP revision summary
- 3P Implementation summary (internal program)
- Other significant Quality System items

The Corporate Director of Quality, Safety & Technology utilizes the information from each laboratory to make decisions impacting the Quality Systems of the company as a whole. Each General Manager utilizes the quarterly report information to make decisions impacting Quality Systems and operational systems at a local level.

Additional information can be found in SOP **S-ALL-Q-014 Quality System Review** or its equivalent revision or replacement.

8.4 Annual Managerial Review

A managerial review of Quality Systems is performed on an annual basis at a minimum. This allows for assessing program effectiveness and introducing changes and/or improvements.

The managerial review must include the following topics of discussion:

- Policy and procedure suitability
- Manager/Supervisor reports
- Internal audit results
- Corrective and preventative actions
- External assessment results
- Proficiency testing studies
- Sample capacity and scope of work changes
- Client feedback, including complaints

This managerial review must be documented for future reference by the Quality Manager and copies of the report are distributed to laboratory staff. The laboratory shall ensure that any actions identified during the review are carried out within an appropriate and agreed timescale.

9.0 CORRECTIVE ACTION

Additional information can be found in SOP S-ALL-Q-012 Corrective Action/Preventative Action Process.

During the process of sample handling, preparation and analysis, certain occurrences may warrant the necessity of corrective actions. These occurrences may take the form of analyst errors, deficiencies in quality control, method deviations, or other unusual circumstances. The Quality System of PASI provides systematic procedures for documentation, monitoring and completion of corrective actions. This can be done using Pace's LabTrack system that lists among other things, the deficiency by issue number, the deficiency source, responsible party, root cause, resolution, due date, and date resolved.

9.1 Corrective Action Documentation

The following items are examples of laboratory deviations or non-conformances that warrant some form of documented corrective action:.

- Quality Control data outside of acceptance criteria
- Sample Acceptance Policy deviations
- Missed holding times
- Instrument failures (including calibration failure)
- Sample preparation or analysis errors
- Sample contamination
- Errors in client reports
- Audit findings (internal and external)
- Proficiency Testing (PT) sample failures
- Client complaints or inquiries

Documentation of corrective actions may be in the form of a comment or footnote on the final report that explains the deficiency (e.g. matrix spike recoveries outside of acceptance criteria) or it may be a more formal documentation (either paper system or computerized spreadsheet). This depends on the extent of the deficiency, the impact on the data, and the method or client requirements for documentation.

The person who discovers the deficiency or non-conformance initiates the corrective action documentation on the Non-Conformance Corrective/ Preventative Action report and/or LabTrack. The documentation must include the affected projects and sample numbers, the name of the applicable Project Manager, the client name and the sample matrix involved. The person initiating the corrective action documentation must also list the known causes of the deficiency or non-conformance as well as any corrective/preventative actions that they have taken. Preventive actions must be taken in order to prevent or minimize the occurrence of the situation.

In the event that the laboratory is unable to determine the cause, laboratory personnel and management staff will start a root cause analysis by going through an investigative process. During this process, the following general steps must be taken into account: defining the non-conformance problem, assigning responsibilities, determining if the condition is significant, and investigating the root cause of the nonconformance problem. General non-conformance investigative techniques follow the path of the sample through the process looking at each individual step in detail. The root cause must be documented within Lab Track or on the Corrective/Preventative Action Report.

After all the documentation is completed, the routing of the Corrective/Preventative Action Report and /or Lab Track will continue from the person initiating the corrective action, to their immediate supervisor or the Project Manager and finally to the Quality Manager, who is responsible for final review and signoff of all formal corrective/preventative actions.

9.2 Corrective Action Completion

9.2.1 Quality Control outside of acceptance criteria

The analyst that is generating or validating Analytical data is responsible for checking the results against established acceptance criteria (quality control limits). The analyst must immediately address any deficiencies discovered. Method blank, LCS or matrix spike failures are evaluated against method, program, and client requirements and appropriate footnotes are entered into the LIMS system. Some deficiencies may be caused by matrix interferences. Where possible, matrix interferences are confirmed by re-analysis.

Quality control deficiencies must be made known to the client on the final report for their review of the data for usability. If appropriate, the supervisor is alerted to the QC failure and if necessary a formal corrective action can be initiated. This may involve the input of the Quality Manager or the General Manager.

The department supervisor and/or Operations Manager are responsible for evaluating the source of the deficiency and for returning the analytical system to control. This may involve instrument maintenance, analytical standard or reagent evaluation, or an internal audit of the analytical procedure.

9.2.2 Sample Acceptance Policy deviations

Any deviation from the Sample Acceptance Policy listed in this Manual must be documented on the Chain-of-Custody or other applicable form by the sample receiving personnel or by the Project Manager. Analysts or supervisors that discover such deviations must contact the sample receiving personnel or appropriate Project Manager so they can initiate the proper documentation and client contact. If a more formalized corrective action must be documented, the Quality Manager is made aware of the situation.

The client is notified of these deviations as soon as possible so they can make decisions on whether to continue with the sample analysis or re-sample. Copies of this documentation are included in the project file.

9.2.3 Missed holding times

In the event that a holding time requirement has been missed, the analyst or supervisor must complete a formal corrective action form. The Project Manager and the Quality Manager must be made aware of these hold time exceedances.

The Project Manager must contact the client for appropriate decisions to be made with the resolution documented and included in the client project file. The Quality Manager includes a list of all missed holding times in their Quarterly Report to the corporate office.

9.2.4 Instrument Failures

In the event of an instrument failure that either causes the necessity for re-analysis or questions the validity of generated results, a formal corrective action must be initiated. The analyst and supervisor evaluate any completed data for validity and usability. They are also responsible for returning the instrument to valid operating condition and for documenting that the system is in control (e.g. acceptable calibration verification).

9.2.5 Sample Preparation or Analysis errors

When there is an error in the preparation or analysis of samples, the analyst evaluates the impact on the usability of the analytical data with the assistance of the supervisor or manager. The affected samples will be re-processed or re-analyzed under acceptable conditions. In the event that no additional sample is available for re-analysis, the client must be contacted for their decision on how to proceed. Documentation may take the form of footnotes or a formal corrective action form.

9.2.6 Errors in client reports

When an error on the client report is discovered, the Project Manager is responsible for initiating a formal corrective action form that describes the failure (e.g. incorrect analysis reported, reporting units are incorrect, reporting limits do not meet objectives). The Project Manager is also responsible for revising the final report if necessary and submitting it to the client.

9.2.7 Audit findings

The Quality Manager is responsible for documenting all audit findings and their corrective actions. This documentation must include the initial finding, the persons responsible for the corrective action, the due date for reporting back to the auditing body, the root cause of the issue, and the corrective action taken to resolve the findings. The Quality Manager is also responsible for providing any back-up documentation used to prove that a corrective action has been completed.

9.2.8 Proficiency Testing failures

Any PT result returned to the Quality Manager as "not acceptable" requires an investigation and applicable corrective actions. The operational staff is made aware of the PT failures and they are responsible for reviewing the applicable raw data and calibrations and list possible causes for error. The Quality Manager reviews their findings and initiates another external PT sample or an internal PT sample to try and correct the previous failure. Replacement PT results must be monitored by the Quality Manager and reported to the applicable regulatory authorities.

9.2.9 Client Complaints

Project Managers are responsible for issuing corrective action forms for client complaints. As with other corrective actions, the possible causes of the problem are listed and the form is passed to the appropriate analyst or supervisor. After the corrective actions have been listed, the Project Manager reviews the corrective action to determine if the client needs or concerns are being addressed.

10.0 GLOSSARY

3P Program	The Pace Analytical continuous improvement program that focuses on Process, Productivity and Performance. Best Practices are identified that can be used by all PASI labs.
Accuracy	The agreement between an observed value and an accepted reference value. Accuracy includes a combination of random error (precision) and systematic error (bias) components that are due to sampling and analytical operations; a data quality indicator.
Aliquot	A portion of a sample taken for analysis.
Analyte	The specific chemical species or parameter an analysis seeks to determine.
Batch	Environmental samples that are prepared and/or analyzed together with the same process and personnel, using the same lot(s) of reagents. A preparation batch is composed of one to 20 environmental samples of the same NELAC-defined matrix, meeting the above-mentioned criteria and with a maximum time between the start of processing of the first and last sample in the batch to be 24 hours. An analytical batch is composed of prepared environmental samples (extracts, digestates or concentrates) that are analyzed together as a group. An analytical batch can include prepared samples originating from various environmental matrices and can exceed 20 samples. **Ohio VAP**: analytical batch is limited to 20 samples or less to match EPA SW-846 definition of batch.
Blank	A sample that has not been exposed to the analyzed sample stream in order to monitor contamination during sampling, transport, storage or analysis. The blank is subjected to the usual analytical and measurement process to establish a zero baseline or background value and is sometimes used to adjust or correct routine analytical results.
Blind Sample	A sample for submitted for analysis with a composition known to the submitter. The analyst/laboratory may know the identity of the sample but not its composition. It is used to test analyst or laboratory proficiency in the execution of the measurement process.
Calibration	To determine, by measurement or comparison with a standard, the correct value of each scale reading on a meter, instrument, or other device. The levels of the applied calibration standard must bracket the range of planned or expected sample measurements.
Calibration Curve	The graphic representation of known values, such as concentrations for a series of calibration standards and their instrument response.
Chain-of-Custody (COC)	A record that documents the possession of samples from the time of collection to receipt in the laboratory. This record generally includes the number and type of containers, mode of collection, collector, time of collection, preservation, and requested analyses.
Confirmation	Verification of the identity of a component through the use of an alternate scientific approach from the original method. These may include, but are not limited to: • second-column confirmation • alternate wavelength • derivatization derivative • mass spectral interpretation • additional cleanup procedures
Contract Required Detection Limit (CRDL)	Detection limit that is required for EPA Contract Laboratory Program (CLP) contracts.
Contract Required Quantitation Limit (CRQL)	Quantitation limit (reporting limit) that is required for EPA Contract Laboratory Program (CLP) contracts.
Comparability	An assessment of the confidence with which one data set can be compared to another. Comparable data are produced through the use of standardized procedures and techniques.

Completeness	The percent of valid data obtained from a measurement system compared to the amount of valid data expected under normal conditions. The equation for completeness is: % Completeness = (Valid Data Points/Expected Data Points)*100
Calibration Verification	The process of verifying a calibration by analysis of standards and comparing the results with the known amount.
Control Chart	A graphic representation of a series of test results, together with limits within which results are expected when the system is in a state of statistical control (see definition for Control Limit)
Control Limit	A range within which specified measurement results must fall to verify that the analytical system is in control. Control limit exceedances may require corrective action or require investigation and flagging of non-conforming data.
Corrective Action	The action taken to eliminate the causes of a non-conformity, defect, or other undesirable situation in order to prevent recurrence.
Corrective and Preventative Action (CAPA)	The primary management tools for bringing improvements to the quality system, to the management of the quality system's collective processes, and to the products or services delivered which are an output of established systems and processes.
Data Quality Objective (DOQ)	Systematic strategic planning tool based on the scientific method that identifies and defines the type, quality, and quantity of data needed to satisfy a specified use or end user.
Data Reduction	The process of transforming raw data by arithmetic or statistical calculations, standard curves, concentration factors, etc., and collation into a more usable form.
Demonstration of Capability	A procedure to establish the ability of the analyst to generate acceptable accuracy.
Detection Limit (DL)	General term for the lowest concentration or amount of the target analyte that can be identified, measured and reported with confidence that the analyte concentration is not a false positive value. See definitions for Method Detection Limit and Limit of Detection.
Document Control (Management)	Procedures to ensure that documents (and revisions thereto) are proposed, reviewed for accuracy, approved for release by authorized personnel, distributed properly and controlled (managed) to ensure use of the correct version at the location where the prescribed activity is performed.
Dry Weight	The weight after drying in an oven at a specified temperature.
Duplicate or Replicate Analysis	The identically performed measurement on two or more sub-samples of the same sample within a short interval of time
Environmental Sample	A representative sample of any material (aqueous, non-aqueous, or multimedia) collected from any source for which determination of composition or contamination is requested or required. Environmental samples can generally be classified as follows: • Non Potable Water (Includes surface water, ground water, effluents, water treatment chemicals, and TCLP leachates or other extracts) • Drinking Water - Delivered (treated or untreated) water designated as potable water • Water/Wastewater - Raw source waters for public drinking water supplies, ground waters, municipal influents/effluents, and industrial influents/effluents • Sludge - Municipal sludges and industrial sludges. • Soil - Predominately inorganic matter ranging in classification from sands to clays. • Waste - Aqueous and non-aqueous liquid wastes, chemical solids, and industrial liquid and solid wastes
Equipment Blank	A sample of analyte-free media used to rinse common sampling equipment to check effectiveness of decontamination procedures.
Field Blank	A blank sample prepared in the field by filling a clean container with reagent water and appropriate preservative, if any, for the specific sampling activity being undertaken.

Field Measurement	Determination of physical, biological, or radiological properties, or chemical constituents that are measured on-site, close in time and space to the matrices being sampled/measured, following accepted test methods. This testing is performed in the field outside of a fixed-laboratory or outside of an enclosed structure that meets the requirements of a mobile laboratory.
Holding Time	The maximum time that samples may be held prior to preparation and/or analysis as defined by the method.
Homogeneity	The degree to which a property or substance is uniformly distributed throughout a sample.
Initial Calibration (ICAL)	The process of analyzing standards, prepared at specified concentrations, to define the quantitative response relationship of the instrument to the analytes of interest. Initial calibration is performed whenever the results of a calibration verification standard do not conform to the requirements of the method in use or at a frequency specified in the method.
Internal Standards	A known amount of standard added to a test portion of a sample as a reference for evaluating and controlling the precision and bias of the applied analytical method.
Intermediate Standard Solution	Reference solutions prepared by dilution of the stock solutions with an appropriate solvent.
Laboratory Control Sample (LCS)	A blank sample matrix, free from the analytes of interest, spiked with known amounts of analytes or a material containing known amounts of analytes. It is generally used to establish intra-laboratory or analyst-specific precision and bias or to assess the performance of all or a portion of the measurement system. Sometimes referred to as Laboratory Fortified Blank, Spiked Blank or QC Check Sample.
Limit of Detection (LOD)	An estimate of the minimum amount of a substance that an analytical process can reliably detect. An LOD is analyte and matrix specific and may be laboratory-dependent.
Limit of Quantitation (LOQ) .	The minimum levels, concentrations or quantities of a target variable (e.g. target analyte) that can be reported with a specified degree of confidence
Laboratory Information Management System (LIMS)	A computer system that is used to maintain all sample information from sample receipt, through preparation and analysis and including sample report generation.
Lot	A quantity of bulk material of similar composition processed or manufactured at the same time.
Matrix	The component or substrate that contains the analyte of interest. For purposes of batch and QC requirement determinations, the following matrix distinctions are used: • **Aqueous or Non-Potable Water**: any aqueous sample excluded from the definition of Drinking Water matrix or Saline/Estuarine source. Includes surface water, groundwater, effluents, and TCLP or other extracts. • **Drinking Water**: any aqueous sample that has been designated a potable or potentially potable water source. • **Saline/Estuarine**: any aqueous sample from an ocean or estuary, or other saltwater source. • **Non-aqueous liquid**: any organic liquid with <15% settleable solids. • **Biological Tissue**: any sample of a biological origin such as fish tissue, shellfish or plant material. Such sample can be grouped according to origin. • **Solid**: includes soils, sediments, sludges, and other matrices with >15% settleable solids. • **Chemical Waste**: a product or by-product or an industrial process that results in a matrix not previously defined • **Air and Emissions**: whole gas or vapor samples including those contained in flexible or rigid wall containers and the extracted concentrated analytes of interest from a gas vapor that are collected with a sorbent tube, impinger solution, filter, or other device.

Matrix Spike (MS)	A sample prepared by adding a known quantity of target analyte to a specified amount of matrix sample for which an independent estimate of target analyte concentration is available. Matrix spikes are used to determine the effect of the matrix on a method's recovery efficiency. (sometimes referred to as Spiked Sample or Fortified Sample)
Matrix Spike Duplicate (MSD)	A second replicate matrix spike prepared in the laboratory and analyzed to obtain a measure of precision of the recovery of each analyte. (sometimes referred to as Spiked Sample Duplicate or Fortified Sample Duplicate)
Method Blank	A sample of a matrix similar to the batch of associated samples (when available) that is free from the analytes of interest and is processed simultaneously with and under the same conditions as samples through all steps of the analytical procedures: and in which no target analytes or interferences are present at concentrations that impact the analytical results for sample analyses.
Method Detection Limit (MDL)	One way to establish a Limit of Detection (LOD); defined as the minimum concentration of a substance that can be measured and reported with 99% confidence that the analyte concentration is greater than zero and is determined from analysis of a sample in a given matrix containing the analyte.
Performance Based Measurement System (PBMS)	An analytical system wherein the data quality needs, mandates or limitations of a program or project are specified and serve as criteria for selecting appropriate test methods to meet those needs in a cost-effective manner.
Precision	The degree to which a set of observations or measurements of the same property, obtained under similar conditions, conform to themselves. Precision is usually expressed as standard deviation, variance or range, in either absolute or relative terms.
Preservation	Refrigeration and/or reagents added at the time of sample collection (or later) to maintain the chemical and/or biological integrity of the sample.
Proficiency Testing	A means of evaluating a laboratory's performance under controlled conditions relative to a given set of criteria through analysis of unknown samples provided by an external source.
Protocol	A detailed written procedure for field and/or laboratory operation that must be strictly followed.
Quality Assurance Project Plan (QAPP)	A formal document describing the detailed quality control procedures required by a specific project.
Quality Assurance (QA)	An integrated system of activities involving planning, quality control, quality assessment, reporting and quality improvement to ensure that a product or service meets defined standards of quality with a stated level of confidence.
Quality Control (QC)	The overall system of technical activities whose purpose is to measure and control the quality of a product or service so that it meets the needs of users.
Quality Control Sample	A sample used to assess the performance of all or a portion of the measurement system. QC samples may be Certified Reference Materials, a quality system matrix fortified by spiking, or actual samples fortified by spiking.
Quality Assurance Manual	A document stating the management policies, objectives, principles, organizational structure and authority, responsibilities, accountability, and implementation of an agency, organization, or laboratory, to ensure the quality of its product and the utility of its product to its users.
Quality System	A structured and documented management system describing the policies, objectives, principles, organizational authority, responsibilities, accountability, and implementation plan of an organization for ensuring quality in its work processes, products (items), and services. The quality system provides the framework for planning, implementing, and assessing work performed by the organization and for carrying out required QA and QC.
Random Error	The EPA has established that there is a 5% probability that the results obtained for any one analyte will exceed the control limits established for the test due to random error. As the number of compounds measured increases in a given sample, the probability for statistical error also increases.

Raw Data	Any original factual information from a measurement activity or study recorded in a laboratory notebook, worksheets, records, memoranda, notes, or exact copies thereof that are necessary for the reconstruction and evaluation of the report of the activity or study. Raw data may include photography, microfilm or microfiche copies, computer printouts, magnetic media, including dictated observations, and recorded data from automated instruments. If exact copies of raw data have been prepared (e.g. tapes which have been transcribed verbatim, dated and verified accurate by signature), the exact copy or exact transcript may be submitted.
Reagent Grade	Analytical reagent (AR) grade, ACS reagent grade, and reagent grade are synonymous terms for reagents that conform to the current specifications of the Committee on Analytical Reagents of the American Chemical Society.
Reference Standard	A standard, generally of the highest metrological quality available at a given location, from which measurements made at that location are derived.
Reporting Limit (RL)	The level at which method, permit, regulatory and client specific objectives are met. The reporting limit may never be lower than the Limit of Detection (i.e. statistically determined MDL). Reporting limits are corrected for sample amounts, including the dry weight of solids, unless otherwise specified. There must be a sufficient buffer between the Reporting Limit and the MDL.
Representativeness	A quality element related to the ability to collect a sample reflecting the characteristics of the part of the environment to be assessed. Sample representativeness is dependent on the sampling techniques specified in the project work plan.
Sample Delivery Group (SDG)	A unit within a single project that is used to identify a group of samples for delivery. An SDG is a group of 20 or fewer field samples within a project, received over a period of up to 14 calendar days. Data from all samples in an SDG are reported concurrently.
Sample Tracking	Procedures employed to record the possession of the samples from the time of sampling until analysis, reporting and archiving. These procedures include the use of a Chain-of-Custody Form that documents the collection, transport, and receipt of compliance samples to the laboratory. In addition, access to the laboratory is limited and controlled to protect the integrity of the samples.
Sensitivity	The capability of a method or instrument to discriminate between measurement responses representing different levels (concentrations) of a variable of interest.
Standard	A substance or material with properties known with sufficient accuracy to permit its use to evaluate the same property in a sample.
Standard Blank	A calibration standard consisting of the same solvent/reagent matrix used to prepare the calibration standards without the analytes. It is used to construct the calibration curve by establishing instrument background.
Standard Operating Procedure (SOP)	A written document which details the method of an operation, analysis, or action whose techniques and procedures are thoroughly prescribed and which is accepted as the method for performing certain routine or repetitive tasks
Stock Standard	A concentrated reference solution containing one or more analytes prepared in the laboratory using an assayed reference compound or purchased from a reputable commercial source.
Surrogate	A substance with properties that mimic the analyte of interest. It is unlikely to be found in environmental samples and is added to them for quality control purposes.
Systems Audit	An on-site inspection or assessment of a laboratory's quality system.
Traceability	The property of a material or measurement result defining its relationship to recognized international or national standards through an unbroken chain of comparisons.
Training Document	A training resource that provides detailed instructions to execute a specific method or job function.

Trip Blank	This blank sample is used to detect sample contamination from the container and preservative during transport and storage of the sample. A cleaned sample container is filled with laboratory reagent water and the blank is stored, shipped, and analyzed with its associated samples.
Uncertainty Measurement	The parameter associated with the result of a measurement that characterized the dispersion of the values that could be reasonably attributed to the measurand (i.e. the concentration of an analyte).

11.0 REFERENCES

- "Guidelines Establishing Test Procedures for the Analysis of Pollutants Under the Clean Water Act." Federal Register, 40 CFR Part 136.
- "Test Methods for Evaluating Solid Wastes: Physical/Chemical Methods." SW-846.
- "Methods for Chemical Analysis of Water and Wastes", EPA 600-4-79-020, 1979 Revised 1983, U.S. EPA.
- U.S. EPA Contract Laboratory Program Statement of Work for Organic Analysis
- U.S. EPA Contract Laboratory Program Statement of Work for Inorganic Analysis
- "Standard Methods for the Examination of Water and Wastewater." Current Edition APHA-AWWA-WPCF
- "Annual Book of ASTM Standards", Section 4: Construction, Volume 04.04: Soil and Rock; Building Stones, American Society of Testing and Materials.
- "Annual Book of ASTM Standards", Section 11: Water and Environmental Technology, American Society of Testing and Materials.
- "NIOSH Manual of Analytical Methods", Third Edition, 1984, U.S. Department of Health and Human Services, National Institute for Occupational Safety and Health.
- "Methods for the Determination of Organic Compounds in Finished Drinking Water and Raw Source Water", U.S. EPA, Environmental Monitoring and Support Laboratory – Cincinnati (September 1986).
- Quality Assurance of Chemical Measurements, Taylor, John K.; Lewis Publishers, Inc. 1987
- Methods for Non-conventional Pesticides Chemicals Analysis of Industrial and Municipal Wastewater, Test Methods, EPA-440/1-83/079C
- Environmental Measurements Laboratory (EML) Procedures Manual, HASL-300, US DOE, February, 1992.
- Requirements for Quality Control of Analytical Data, HAZWRAP, DOE/HWP-65/R1, July, 1990.
- Requirements for Quality Control of Analytical Data for the Environmental Restoration Program, Martin Marietta, ES/ER/TM-16, December, 1992.
- Quality Assurance Manual for Industrial Hygiene Chemistry, AIHA, 1988
- National Environmental Laboratory Accreditation Conference, Constitution, Bylaws, and Standards. Most recent
- ISO/IEC 17025:2005, General requirements for the competence of testing and calibration laboratories.

12.0 REVISIONS

The PASI Corporate Quality and Safety Manager files both a paper copy and electronic version of a Microsoft Word document with tracked changes detailing all revisions made to the previous version of the Quality Assurance Manual. This document is available upon request. All revisions are summarized in the table below.

Document Number	Reason for Change	Date
Quality Assurance Manual Revision 11.0	Overall conversion to template format. Removed all references to Addenda. Changes required based on conversion are not explicitly noted unless change represents a significant policy change. SECTION 1: • Add comment to address continuous improvement to quality system. • Changed statement of purpose in Section header to "Mission Statement". • Added requirements for appointment when Technical Director absent. • Added requirements for notification to AA's and updates to organizational charts when management changes. • Added Client Services Manager job description. SECTION 2: • Changed temperature requirements to "Not Frozen but ≤6°C". • Added flexible section concerning default sampling time in absence of client specified time. • Added flexible section to address sample and container identification by the LIMS. • Changed sample retention requirement to 45 days from receipt of samples. Added comment allowing for storage outside of temperature controlled conditions. SECTION 3: • Inserted allowance for use of older methods. • Changed references to work processing and training documents to allow for use of LMS and other types of training media. • Inserted allowance for alternative DOCs where spiking not possible. SECTION 4: • Inserted reference to Anonymous Message line. • Inserted reference to the use of default control limits. • Inserted allowance for release of data without corrective action for obvious matrix interferences. • Inserted reference to the treatment of internal standards. • Inserted allowance for use of MDL annual MDL verification in lieu of full 40 CFR Part 136 annual MDL studies. • Inserted general procedure for LOQ verification SECTION 5: • Added general process for approval and use of QAM template. • Removed specific reference of Work Process Manuals. Left flexible section to include all other controlled documentation. SECTION 6: • No changes noted. SECTION 7: • Added qualifications for secondary reviewers. SECTION 8: • Changed frequency listing for Corporate Audits. SECTION 9: • Changed references from QA Track to Lab Track – left flexible to	September 17th, 2007

Document Number	Reason for Change	Date
	accommodate information still in QA Track. SECTION 10: • No changes noted. SECTION 11: • No changes noted. ATTACHMENTS: • Standardized format for Attachments.	
	Indianapolis revisions: 1. General: added references to Indianapolis facility. 2. General: removed addendum and replaced with specific attachments. 3. Section 1.11: entered in frequency of door code changes 4. Section 2.5: detailed the sample numbering system at the Indianapolis lab (EPIC Pro). 5. General revision (corporate): changed several words such as "may" and "should" to "will" and "must" (this was a corrective action to a NELAC audit finding). 6. General: revised SOP references throughout to match actual SOPs in use. 7. Section 4.3, fifth paragraph: added SOP reference for more information on lab-generated QC limits, 8. Section 4.12: removed sentence about lab having uncertainty SOP. 9. Section 5.1.2: added last paragraph regarding Ohio VAP SOP requirements. 10. Section 5.1.3: added language about other quality document control practices. 11. Section 7.2: added last paragraph about Data Checker. 12. Sections 4.2, 4.3, 4.4, 4.5, 4.6, 4.7, 6.2.1: added in required language for Ohio VAP projects regarding QC outliers. 13. Section 4.10: added in language for Ohio VAP MDL requirements. 14. Glossary: added note to definition of batch regarding Ohio VAP batch requirement.	30Sep2007

ATTACHMENT I

Quality Control Calculations

PERCENT RECOVERY (%REC)

$$\%REC = \frac{(MSConc - SampleConc)}{TrueValue} * 100$$

NOTE: The SampleConc is zero (0) for theLCS and Surrogate Calculations

PERCENT DIFFERENCE (%D)

$$\%D = \frac{MeasuredValue - TrueValue}{TrueValue} * 100$$

where:
TrueValue = Amount spiked (can also be the $\overline{CF}$ or $\overline{RF}$ of the ICAL Standards)
Measured Value = Amount measured (can also be the CF or RF of the CCV)

PERCENT DRIFT

$$\%Drift = \frac{CalculatedConcentration - TheoreticalConcentration}{TheoreticalConcentrtion} * 100$$

RELATIVE PERCENT DIFFERENCE (RPD)

$$RPD = \frac{|(R1 - R2)|}{(R1 + R2)/2} * 100$$

where:
R1 = Result Sample 1
R2 = Result Sample 2

CORRELATION COEFFICIENT (R)

$$CorrCoeff = \frac{\sum_{i=1}^{N} W_i * (X_i - \overline{X}) * (Y_i - \overline{Y})}{\sqrt{\left(\sum_{i=1}^{N} W_i * (X_i - \overline{X})^2\right) * \left(\sum_{i=1}^{N} W_i * (Y_i - \overline{Y})^2\right)}}$$

With:	N	Number of standard samples involved in the calibration
	i	Index for standard samples
	Wi	Weight factor of the standard sample no. i
	Xi	X-value of the standard sample no. i
	X(bar)	Average value of all x-values
	Yi	Y-value of the standard sample no. i
	Y(bar)	Average value of all y-values

ATTACHMENT I (CONTINUED)

Quality Control Calculations (continued)

STANDARD DEVIATION (S)

$$S = \sqrt{\sum_{i=1}^{n} \frac{(X_i - \overline{X})^2}{(n-1)}}$$

where:
n = number of data points
X_i = individual data point
$\overline{X}$ = average of all data points

AVERAGE ($\overline{X}$)

$$\overline{X} = \frac{\sum_{n=1}^{i} X_i}{n}$$

where:
n = number of data points
X_i = individual data point

RELATIVE STANDARD DEVIATION (RSD)

$$RSD = \frac{S}{\overline{X}} * 100$$

where:
S = Standard Deviation of the data points
$\overline{X}$ = average of all data points

INDIANAPOLIS

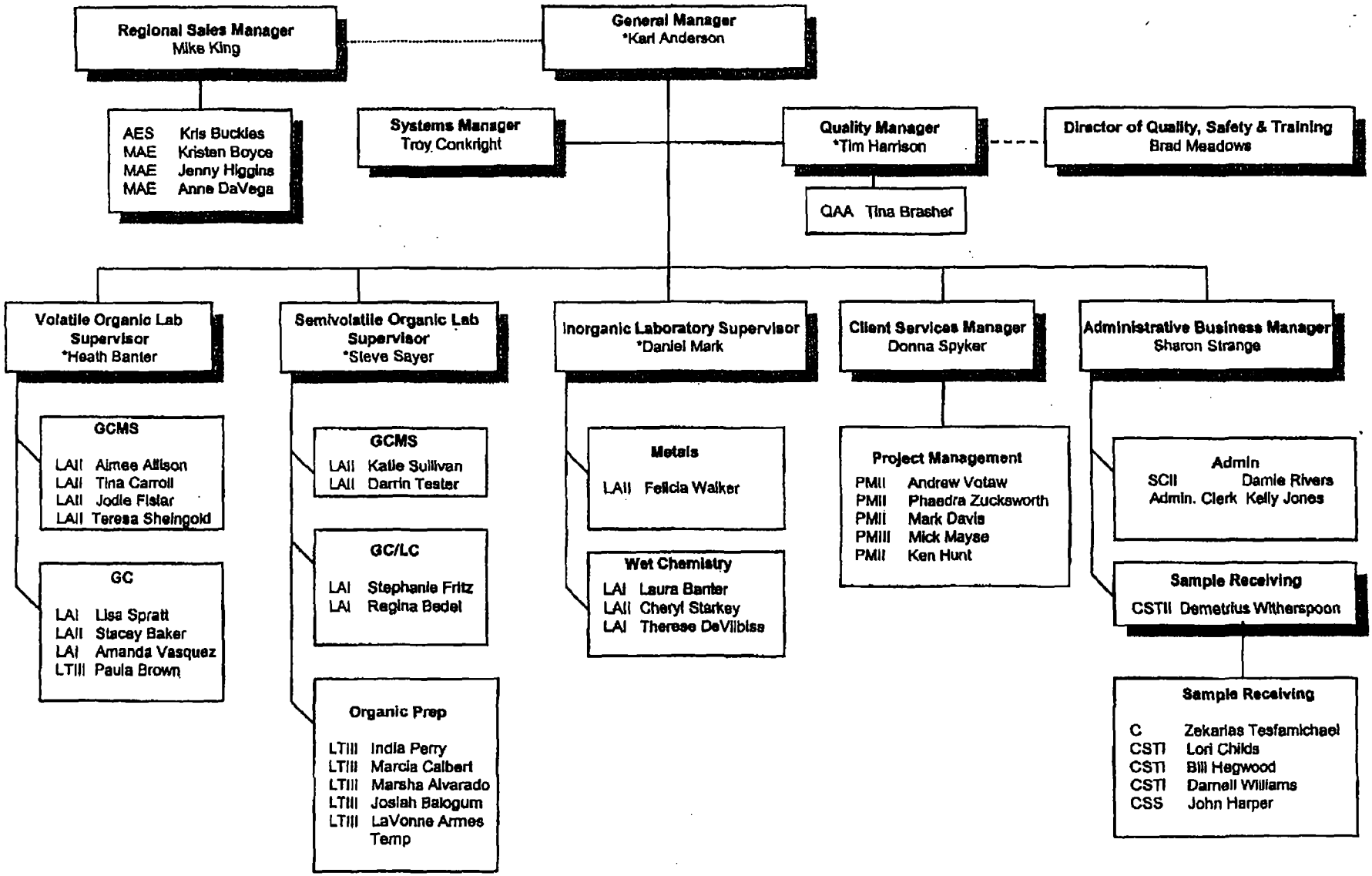

*NELAC TECHNICAL DIRECTOR

Last Revised Sept. 18, 2007

ATTACHMENT IIB

PASI – CORPORATE ORGANIZATIONAL CHART

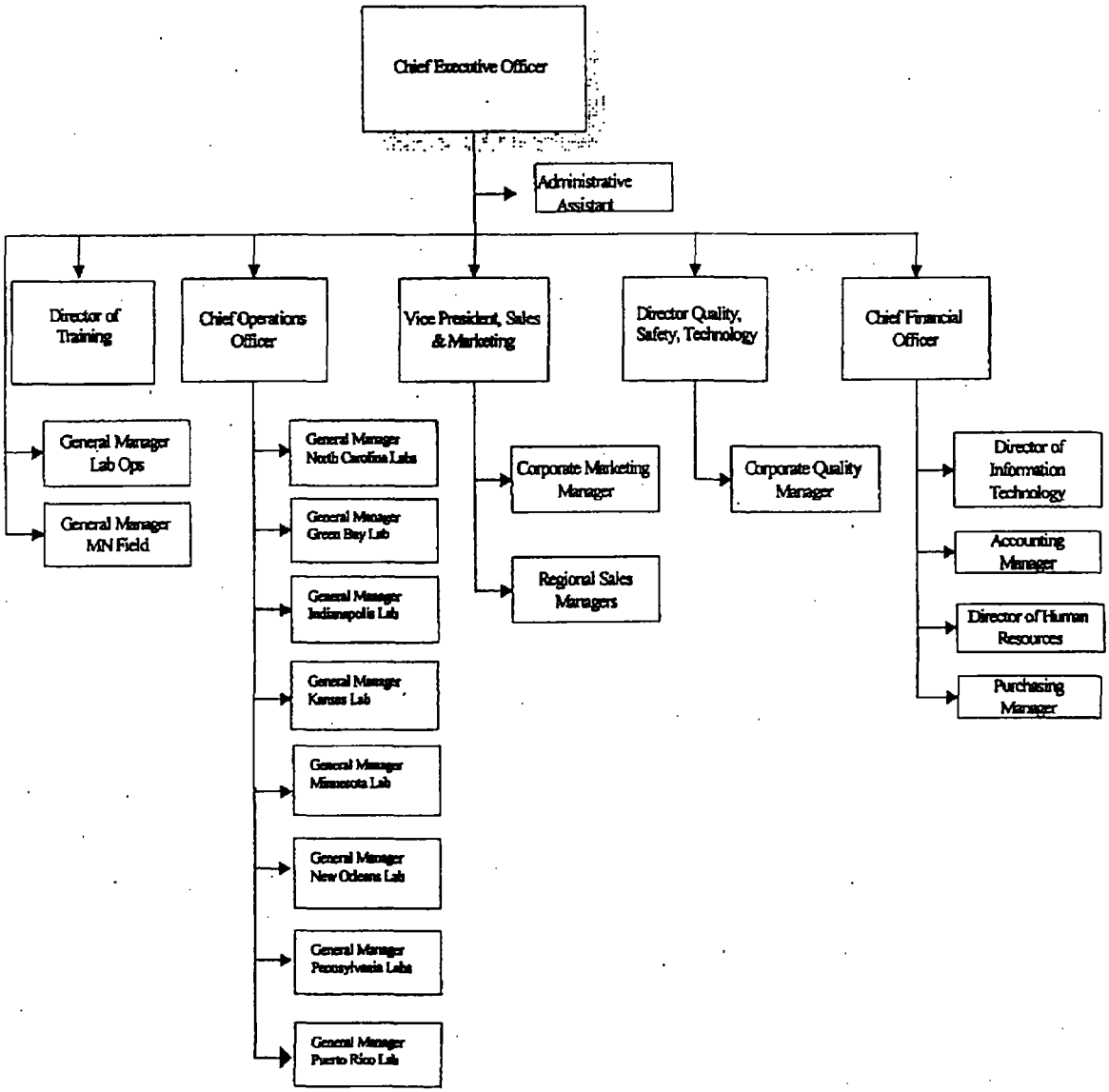

Pace Indianapolis Equipment/Instrumentation List

INSTRUMENT	MANUFACTURER	MODEL NUMBER	DETECTOR	AUTOSAMPLER	SERVICE ANALYSIS	AGE (yrs)
GC/MS (50MSV1)	Hewlett-Packard	6890	MS (5973)	Archon	8260/624/5035	5
GC/MS (50MSV2)	Hewlett-Packard	5890	MS (5971A)	Centurion	8260/624/5035	9
GC/MS (50MSV3)	Hewlett-Packard	6890	MS (5973)	Archon/PT2	8260/624/5035/524.2	6
GC/MS (50MSV4)	Agilent	6850	MS (5975B)	Centurion	8260/624/5035	<1
GC/MS (50MSV5)	Hewlett-Packard	6890	MS (5973)	Archon/PT2	8260/624/5035	5
GC/MS (50MSS1)	Hewlett-Packard	6890	MS (5973)	HP 7683	8270/SIM	5
GC/MS (50MSS2)	Hewlett-Packard	5890	MS (5972)	HP 7673	8270	9
GC/MS (50MSS3)	Hewlett-Packard	5890	MS (5972)	HP 7673	8270	9
GC/MS (50MSS4)	Hewlett-Packard	6890	MS (5975)	HP 7683B	8270/SIM	2
Gas Chromatograph (50GCS4)	Hewlett-Packard	5890	ECD	HP 7673	8081/8082	15
Gas Chromatograph (50GCS5)	Hewlett-Packard	5890	ECD	HP 7673	8081/8082	15
Gas Chromatograph (50GCV5)	Hewlett-Packard	5890	PID	Archon	8021/602	9
Gas Chromatograph (50GCV6)	Hewlett-Packard	5890	PID	Archon/PT2	8021/602	9
Gas Chromatograph (50GCV7)	Hewlett-Packard	5890	PID	Archon	8021/602	9
Gas Chromatograph (50GCV2)	Hewlett-Packard	5890	FID	Archon	GRO(8015)	10
Gas Chromatograph (50GCS2)	Hewlett-Packard	5890	FID	HP 7673	DRO(8015)	9
Gas Chromatograph (50GCS3)	Hewlett-Packard	5890	FID (GC Express)	HP 7673	DRO(8015)	9
Gas Chromatograph (50GCS1)	Hewlett-Packard	5890	FID	HP 7673	IH / special projects	9
Trace ICP (50ICP1)	TJA	ICAP61E	n/a	n/a	6010/200.7	15
Trace ICP (50ICP2)	Thermo Scientific	iCAP 6000	n/a	n/a	6010/200.7	<1
Mercury Analyzer	Perkin Elmer	FIMS	n/a	n/a	7470/7471/245	8
Auto Analyzer	Lachat	Quick Chem	n/a	n/a	CN,NO3,Cl,Phenol, NH3	9
Graphite Furnace	Perkin Elmer	Zeeman 5100	n/a	n/a	7000/200 series	9
COD Reactor	Hach	n/a	n/a	n/a	COD	15
Ignitability Tester	Pensky-Martens	n/a	n/a	n/a	flashpoint	9
Spectrophotometer	Spec 20	Labtronics	n/a	n/a	COD, Hex Cr	7
Spectrophotometer	Hach	DR5000	n/a	n/a	wet chem	2
HPUX server (Target)	Thermolab systems	Target 3.4				
Procurve HP switch	Hewlett-Packard	4000M				
Adtran CSU/DSU	Adtran	TSU 600				
Cisco Router	Cisco	2500 series				
Linux Bridge Server	n/a	n/a				
Novell Netware IBM eServer	IBM eserver	xSeries220				
VPN Server	IBM eserver	xSeries232				
EPIC Server	IBM clone	n/a				
Oracle Server	IBM clone	n/a				

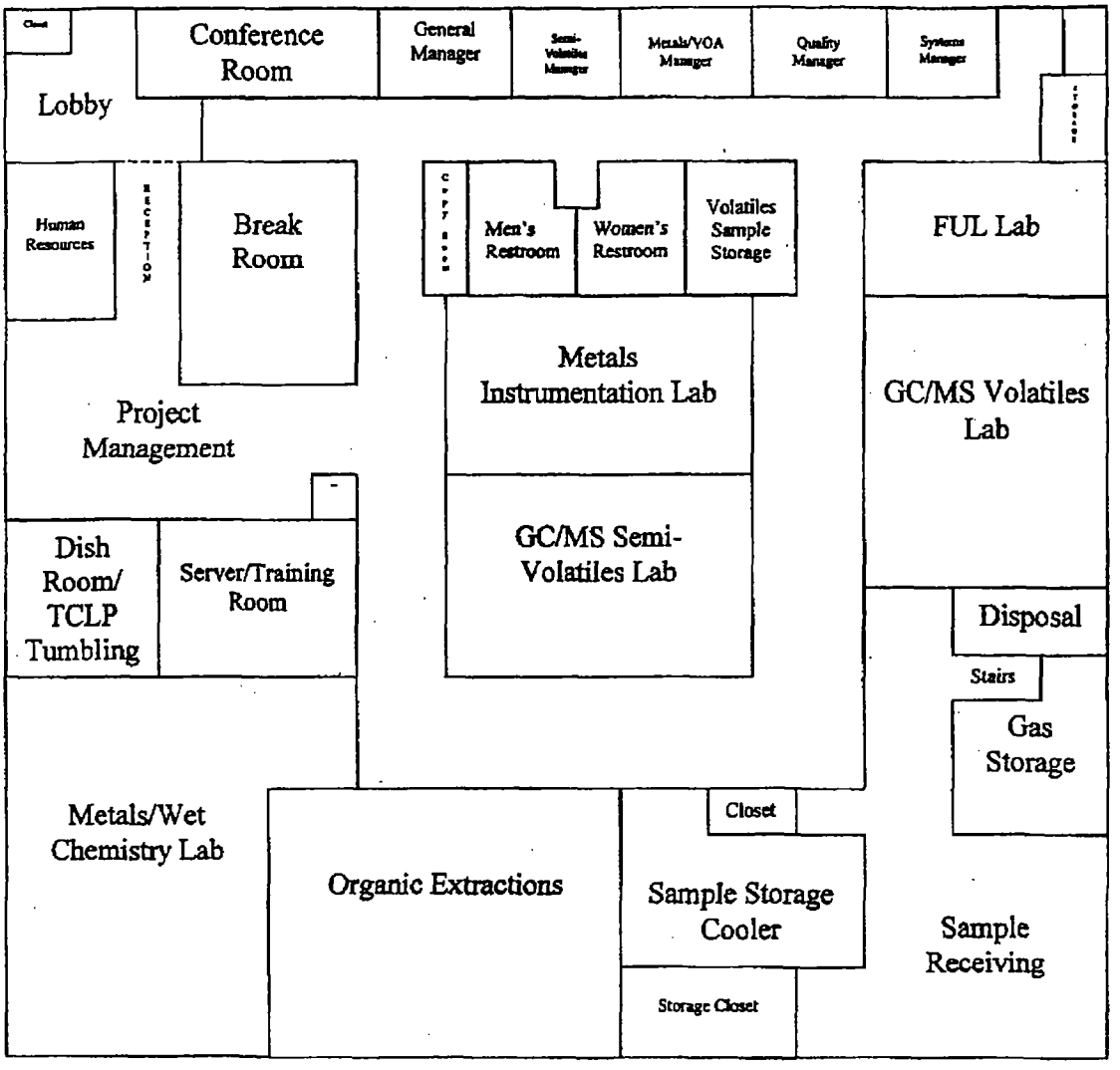

Pace Analytical Services, Inc.
7726 Moller Road
Indianapolis, IN 46268
(317)875-5894
www.pacelabs.com

Standard Operating Procedures

Pace Indianapolis Standard Operating Procedure (SOP) Summary

Title	SOP Number	Rev	Method	Eff Date
Alkalinity	IN-I-003	7	310.1/ SM2320B	1/17/2007
Metals by GFAA	IN-I-004	5	7000 series/200.9	9/13/2005
Volatiles by GC	S-IN-O-006	8	8021/602	2/22/2007
Biochemical Oxygen Demand (BOD)	IN-I-007	6	SM 5210B/ 405.1	7/11/2006
Chloride	IN-I-008	10	325.2	9/22/2006
Chloride (Ohio VAP only)	S-IN-VAP-I-008	10	325.2	5/11/2007
Standard and Reagent Preparation	S-IN-P-009	7	none	2/22/2007
Total Residual Chlorine (TRC)	IN-I-010	5	Hach 8167	1/11/2007
Glassware Cleaning	S-IN-P-011	7	none	2/22/2007
Chemical Oxygen Demand	IN-I-012	5	410.4/8000	11/28/2006
Acidity	IN-I-013	7	305.1	1/10/2007
Total Cyanide	IN-I-015	8	335.4	9/22/2006
Data Review, Validation and Approval	S-IN-Q-016	9	none	8/23/2007
ICP Metals	IN-I-019	6	6010	1/11/2007
ICP Metals (Ohio VAP only)	S-IN-VAP-I-019	2	6010	in progress
Diesel Range Organics (DRO)	S-IN-O-020	8	8015	3/6/2007
Diesel Range Organics (DRO) (Ohio VAP only)	S-IN-VAP-O-020	6	8015	in progress
Laboratory Housekeeping	IN-P-023	5	none	9/14/2006
pH in waters	IN-I-024	5	150.1	10/4/2006
Fluoride	IN-I-027	7	340.2	10/11/2006
Fluoride (Ohio VAP only)	S-IN-VAP-I-027	6	340.2	5/11/2007
Volatiles by GC/MS (8260)	S-IN-O-029	11	8260	2/22/2007
Volatiles by GC/MS (8260) (Ohio VAP only)	S-IN-VAP-O-029	10	8260/624/524	9/7/2005
Acid Digestion of ICP/GFAA samples (liquids)	S-IN-I-030	6	3010/3020	8/22/2007
Acid Digestion of ICP/GFAA samples (liquids) (VAP only)	S-IN-VAP-I-030	6	3010/3020	6/18/2007
Acid Digestion of ICP/GFAA samples (solids)	IN-I-031	6	3050	6/24/2005
Acid Digestion of ICP/GFAA samples (solids) (VAP only)	S-IN-VAP-I-031	7	3050	6/18/2007
Hardness	IN-I-032	7	130.2	1/10/2007
Sulfite	IN-I-034	4	377.1	7/14/2006
Oxidation-Reduction Potential in Soils	IN-I-035	4	SM2580B	1/10/2007
Flashpoint	IN-I-038	5	1010	1/10/2007
Mercury in water and soil samples	IN-I-040	9	7470/7471	3/16/2007
Mercury in water and soil samples (Ohio VAP only)	S-IN-VAP-I-040	1	7470/7471	in progress
Nitrate/ Nitrite	IN-I-042	10	353.2	1/18/2007
Nitrate/ Nitrite (Ohio VAP only)	S-IN-VAP-I-042	10	353.2	5/11/2007
Ammonia Nitrogen	IN-I-043	8	350.1	9/22/2006
Ammonia Nitrogen (Ohio VAP only)	S-IN-VAP-I-043	8	350.1	5/11/2007
Metals in air samples	IN-I-046	4	NIOSH 7303	9/22/2006
Mercury in air samples	S-IN-I-047	4	NIOSH 6009	8/22/2007
Organochlorine Pesticides	IN-O-049	7	8081	10/4/2006
Organochlorine Pesticides (Ohio VAP only)	S-IN-VAP-O-049	7	8081	in progress
Polychlorinated Biphenyls (PCBs)	IN-O-050	7	8082	10/4/2006
Polychlorinated Biphenyls (PCBs) (Ohio VAP only)	S-IN-VAP-O-050	7	8082	in progress
Total and Respirable Dust	IN-I-052	4	0500 & 0600	1/10/2007
Separatory Funnel Extraction	IN-O-054	6	3510	10/5/2006
Separatory Funnel Extraction (Ohio VAP only)	S-IN-VAP-O-054	2	3510	in progress
Internal Chain-of-Custody	S-IN-P-055	4	none	2/22/2007
Lead in air samples	S-IN-I-057	4	40CFR appG	8/22/2007
Laboratory Power Failure	S-IN-P-058	6	none	8/23/2007

Total Phenolics	S-IN-I-059	9	420.2	in progress
Total Phenolics (Ohio VAP only)	S-IN-VAP-I-059	9	420.2	5/17/2007
Phosphorus	S-IN-I-060	7	SM4500PE/365.2	7/11/2006
Phosphorus (Ohio VAP only)	S-IN-VAP-I-060	8	365.2	5/11/2007
Electronic Data Management	S-IN-P-061	6	none	8/23/2007
TCLP Extraction	IN-I-062	5	1311	7/11/2006
Hexavalent Chromium	IN-I-063	8	7196	9/22/2006
Hexavalent Chromium (Ohio VAP only)	S-IN-VAP-I-063	7	7196	8/15/2005
Automated Pipet Calibration	IN-P-065	6	none	6/16/2006
Charcoal Tube Analysis	S-IN-H-067	4	NIOSH 1003, 1500, 1501	5/3/2007
Semi-volatiles by GC/MS	S-IN-O-068	8	8270	3/6/2007
Semi-volatiles by GC/MS (Ohio VAP only)	S-IN-VAP-O-068	8	8270	6/18/2007
pH in solids	IN-I-069	5	9045	9/22/2006
Alkaline Digestion for Hexavalent Chromium	S-IN-I-070	5	3060A	5/3/2007
Specific Conductance	S-IN-I-071	4	120.1	8/23/2007
Sulfate- turbidimetric	IN-I-073	6	375.4	9/22/2006
Sulfate- turbidimetric (Ohio VAP only)	S-IN-VAP-I-073	6	375.4	in progress
Cyanide soil distillation	S-IN-I-074	5	9012	5/9/2006
Silica Gel Cleanup	S-IN-O-075	4	3630	5/9/2006
Total Sulfide (methylene blue method)	IN-I-076	3	376.2	3/16/2007
Total Kjeldahl Nitrogen	IN-I-080	5	351.2	9/22/2006
Total Kjeldahl Nitrogen (OhioVAP only)	S-IN-VAP-I-080	5	351.2	6/18/2007
Measurement of Solids	IN-I-084	1	160 methods	9/22/2006
Turbidity (nephelometric method)	IN-I-090	6	180.1	3/16/2007
Percent Moisture	S-IN-I-094	4	ASTM	8/22/2007
Deionized Water Quality testing	IN-Q-096	3	none	1/10/2007
Settleable Solids	IN-I-098	5	160.5	3/16/2007
Ultrasonic Extraction	IN-O-100	6	3550	10/5/2006
Ultrasonic Extraction (Ohio VAP only)	S-IN-VAP-O-100	5	3550	6/7/2005
Gasoline Range Organics	S-IN-O-109	6	8015	5/17/2007
Free Liquids	IN-I-114	5	9095	3/16/2007
Ignitability of Solids	S-IN-I-116	4	1030	3/16/2007
Density/ Specific Gravity	S-IN-I-117	4	SM2710F	3/16/2007
Resistivity in soils (AASHTO method)	IN-I-118	5	T288-91	1/10/2007
Operation of Waste Disposal Equipment	IN-P-119	2	none	2/5/2007
Volatiles by GC/MS (624)	IN-O-120	1	624	4/20/2006
Volatiles by GC/MS (524.2)	IN-O-121	1	524.2	6/30/2006
Volatiles by GC (Ohio VAP only)	IN-VAP-O-122	1	8021	9/28/2005
TSP and PM-10 analyses	S-IN-I-123	2	none	6/18/2007
Gasoline Range Organics (Ohio VAP only)	IN-VAP-O-124	1	8015	9/28/2005
QC Limit Generation and Implementation	IN-Q-126	0	none	6/5/2006
Laboratory Spreadsheet Validation	IN-Q-127	0	none	5/19/2006
Ferrous Iron	IN-I-128	0	SM3500Fe	10/4/2006
Extraction for Free Cyanide	S-IN-I-129	0	9014	in progress
Microwave Extraction	IN-O-130	0	3546	10/24/2006
ICP Metals (200.7)	IN-I-131	0	200.7	in progress
Mercury in waters (245.1)	IN-I-132	0	245.1	3/16/2007
Semi-volatiles by GC/MS (SIM)	S-IN-O-133	0	8270 SIM	in progress
Semi-volatiles by GC/MS (SIM) (Ohio VAP only)	S-IN-VAP-O-133	0	8270 SIM	in progress
Alcohols by GC (modified 8015)	S-IN-O-134	0	8015 mod	in progress
Phenol by GC (NCASI method CI/WP-98.01	S-IN-O-135	0	CI/WP-98.01	in progress
Sulfuric Acid Clean-up for PCBs	IN-O-150	1	3665	3/30/2006
Copper Clean-up for PCBs	IN-O-151	1	3660	3/30/2006
Receipt of Lab Supplies	S-IN-P-152	0	none	8/23/2007

Pace Company-wide Standard Operating Procedure (ALL-SOP) Summary

Title	SOP Number	Rev	Method	Eff Date
Sample Management	ALL-C-001	1	none	7/25/2005
Addendum: Sample Management	ALL-IN-C-001	2	none	10/4/2006
Bottle Order Database	S-ALL-C-002	0	none	10/17/2006
Subcontracting Samples	S-IN-C-003	1	none	**in progress**
Bottle Preparation	S-IN-C-004	0	none	**in progress**
Determination of Phenolics, Spectrophometric, Manual or Automated	ALL-I-003	0	420, 9065	8/15/2006
System Security and Integrity	ALL-IT-001	1	none	4/15/2005
Server Back-up	S-ALL-IT-002	1	none	1/4/2007
The Determination of Mercury by CVAAS (**Ohio VAP only**)	ALL-M-001	0	7470/7471	1/21/2005
Addendum: Determination of Mercury by CVAAS (**Ohio VAP only**)	ALL-IN-M-001	3	7470/7471	8/15/2005
The Determination of Metals by ICP (**Ohio VAP only**)	ALL-M-002	1	6010	9/24/2004
Addendum: Determination of Metals by ICP (**Ohio VAP only**)	ALL-IN-M-002	3	6010	8/15/2005
Separatory Funnel Extraction (**Ohio VAP only**)	ALL-O-003	1	3510	8/17/2005
Addendum: Separatory Funnel Extraction (**Ohio VAP only**)	ALL-IN-O-003	3	3510	9/12/2005
Preparation of SOPs	S-ALL-Q-001	6	none	11/28/2006
Document Management	S-ALL-Q-002	1	none	11/28/2006
Document Numbering	S-ALL-Q-003	1	none	11/28/2006
Method and Instrument Detection Limit Studies	S-ALL-Q-004	4	none	6/18/2007
Purchasing of Laboratory Supplies	ALL-Q-005	2	none	8/22/2006
Receipt and Storage of Laboratory Supplies	ALL-Q-006	1	none	4/10/2006
Acode Validation: EPIC PRO	ALL-Q-007	0	none	8/15/2005
Acode Addition/Modification: EPIC PRO	ALL-Q-008	0	none	8/15/2005
Laboratory Documentation	ALL-Q-009	0	none	1/21/2005
Addendum: Laboratory Documentation	ALL-IN-Q-009	1	none	3/1/2005
PE/PT Program	S-ALL-Q-010	1	none	1/10/2007
Audits and Inspections	ALL-Q-011	0	none	3/1/2005
Corrective Action/ Preventative Action Process	ALL-Q-012	0	none	8/8/2005
Support Equipment	ALL-Q-013	0	none	4/28/2005
Addendum: Support Equipment	ALL-IN-Q-013	0	none	10/11/2006
Quality System Review	ALL-Q-014	0	none	3/1/2005
Manual Integration	S-ALL-Q-016	0	none	3/4/2005
Addendum: Manual Integration	ALL-IN-Q-016	1	none	9/13/2005
Subcontracting Samples	ALL-Q-017	1	none	7/28/2005
Monitoring Storage Units	ALL-Q-018	0	none	6/14/2005
Addendum: Monitoring Storage Units	ALL-IN-Q-018	0	none	9/14/2006
Training Procedures	ALL-Q-020	0	none	7/25/2005
Sub-sampling (Sample Homogenization)	S-ALL-Q-021	1	none	12/12/2006
3P Program: Continuous Process Improvement	ALL-Q-022	1	none	2/22/2007
Software Validation in the Laboratory	ALL-Q-026	0	none	**in progress**
Use and Operation of Lab Track System	S-ALL-Q-028	0	none	6/18/2007
Hazard Assessment	ALL-S-001	0	none	3/1/2005
Waste Handling	ALL-S-002	0	none	5/26/2005
Addendum: Waste Handling	ALL-IN-S-002	0	none	5/26/2005

ATTACHMENT VI

PASI – INDIANAPOLIS CERTIFICATION LIST

State or Agency	Status	Comments/Changes/Activity
Indiana DOH	Current; expires 5/13/2008	DW only
Illinois EPA (NELAC)	Current; expires 10/12/2008	NELAC (DW, CWA, RCRA)
Pennsylvania	Current; expires 7/31/2008	RCRA, CWA
West Virginia	Current; expires 10/31/2008	RCRA, CWA
Kentucky	Current; expires 1/24/2009	RCRA (UST)
Kansas	Current; expires 4/30/2008	RCRA & CWA metals only
Ohio VAP	Current: expires 10/13/2008	RCRA, CWA only

ATTACHMENT VII

PASI – CHAIN OF CUSTODY

Pace Analytical

CHAIN-OF-CUSTODY / Analytical Request Document

The Chain-of-Custody is a LEGAL DOCUMENT. All relevant fields must be completed accurately.

Page: of

Section A Required Client Information:	Section B Required Project Information:	Section C Invoice Information:
Company:	Report To:	Attention:
Address:	Copy To:	Company Name:
		Address:
Email To:	Purchase Order No.:	Pace Quote Reference:
Phone: Fax:	Project Name:	Pace Project Manager:
Requested Due Date/TAT:	Project Number:	Pace Profile #:

REGULATORY AGENCY

☐ NPDES ☐ GROUNDWATER ☐ DRINKING WATER

☐ UST ☐ RCRA OTHER _____

Site Location STATE: _____

Requested Analysis Filtered (Y/N)

Section D Required Client Information

Matrix Codes MATRIX / CODE: Drinking Water DW; Water WT; Waste Water WW; Product P; Soil/Solid SL; Oil OL; Wipe WP; Air AR; Tissue TS; Other OT

SAMPLE ID (A-Z, 0-9 / ,) Sample IDs MUST BE UNIQUE

ITEM #	SAMPLE ID	MATRIX CODE (see valid codes to left)	SAMPLE TYPE (G=GRAB C=COMP)	COLLECTED: COMPOSITE START DATE	COMPOSITE START TIME	COMPOSITE ENDING DATE	COMPOSITE ENDING TIME	SAMPLE TEMP AT COLLECTION	# OF CONTAINERS	Preservatives: Unpreserved	H_2SO_4	HNO_3	HCl	NaOH	$Na_2S_2O_3$	Methanol	Other	Analysis Test ↓	Y/N											Residual Chlorine (Y/N)	Pace Project No./ Lab I.D.
1																														
2																														
3																														
4																														
5																														
6																														
7																														
8																														
9																														
10																														
11																														
12																														

ADDITIONAL COMMENTS	RELINQUISHED BY / AFFILIATION	DATE	TIME	ACCEPTED BY / AFFILIATION	DATE	TIME	SAMPLE CONDITIONS			

SAMPLER NAME AND SIGNATURE

PRINT Name of SAMPLER:

SIGNATURE of SAMPLER: DATE Signed (MM/DD/YY):

Temp in °C	Received on Ice (Y/N)	Custody Sealed Cooler (Y/N)	Samples Intact (Y/N)

ATTACHMENT VIII
METHOD HOLD TIME, CONTAINER AND PRESERVATION GUIDE

PASI - INDIANAPOLIS

Parameter	Matrix	Container	Preservative		Max Hold Time
2, 3, 7, 8-TCDD	Soil	4oz Glass Jar			90/40 Days
2, 3, 7, 8-TCDD	Water				90/40 Days
Acidity	Water				14 Days
Alkalinity	Water				14 Days
Alpha Emitting Radium Isotopes	Water		HNO_3		180 days
Anions by IC, including Br, Cl, F, NO_2, NO_3, SO_4	Water				Br, Cl, F, SO_4 (28 Days) NO_2, NO_3 (48 Hours)
Aromatic and Halogenated Volatiles	Soil	5035 vial kit or 4oz jar			14 days
Aromatic and Halogenated Volatiles	Water		HCl, $Na_2S_2O_3$		14 Days
Bacteria, Total Plate Count	Water		$Na_2S_2O_3$		24 Hours
Base/Neutrals and Acids	Soil	4oz Glass Jar			14/40 Days
Base/Neutrals and Acids	Water		HCl, $Na_2S_2O_3$		7/40 Days
Base/Neutrals, Acids & Pesticides	Water		HCl, $Na_2S_2O_3$		7/30 Days
BOD/cBOD	Water				48 hours
BTEX/Total Hydrocarbons	Air	Summa Canister			14 Days
BTEX/Total Hydrocarbons	Air	Tedlar Bag			48 Hours
Chloride	Water				28 Days
Chlorinated Herbicides	Soil	4oz Glass Jar			14/40 Days
Chlorinated Herbicides	Water		HCl, $Na_2S_2O_3$		14/28 Days
Chorine, Residual	Water				Analyze within 15 minutes
COD	Water		H_2SO_4		28 Days
Color	Water				48 Hours
Condensable Particulate Emissions	Air	Solutions			6 Months
Cyanide, Reactive	Water				28 Days
Cyanide, Total and Amenable	Water		NaOH		14 Days, 24 Hours if Sulfide present
Diesel Range Organics	Soil	4oz Glass Jar			14/40 Days
Diesel Range Organics	Water				7/40 Days
Dioxins & Furans	Air	PUF			30/45 Days
EDB & DBCP	Water		HCl, $Na_2S_2O_3$		14 Days
Explosives	Water				7/40 Days
Explosives	Soil	4oz Glass Jar			14/40 Days
Ferrous Iron	Water				Immediate
Flashpoint/Ignitability	Water				28 Days
Fluoride	Water				28 Days
Gamma Emitting Radionuclides	Water		HNO_3		180 days
Gas Range Organics	Water		HCl		14 Days
Gasoline Range Organics	Soil	5035 vial kit or 4oz jar			14 days
Gross Alpha (NJ 48Hr Method)	Water		HNO_3		48 Hrs
Gross Alpha and Gross Beta	Water		HNO_3		180 days
Haloacetic Acids	Water		NH_4Cl		14/7 Days
Hardness, Total ($CaCO_3$)	Water		HNO_3		6 Months
Hexavalent Chromium	Water		50% NaOH		24 Hours
Hydrogen Halide & Halogen Emissions	Air	Solutions			6 Months
Lead Emissions	Air	Filter/Solutions			6 Months
Low Level Mercury	Water		BrCl		90 days (if preserved and oxidized)
Mercury	Soil	4oz Glass Jar			28 days
Mercury	Water		HNO_3		28 Days
Metals	Air	Filters			6 Months
Metals	Soil	4oz Glass Jar			6 months
Metals (and other ICP elements)	Water		HNO_3		6 Months
Methane, Ethane, & Ethene	Water		HCl		14 Days
Methane, Ethane, Ethene	Air	Summa Canister			14 Days
Methane, Ethane, Ethene	Air	Tedlar Bag			48 Hours
Nitrogen, Ammonia	Water		H_2SO_4		28 Days

Parameter	Matrix	Container	Preservative	Max Hold Time
Nitrogen, Kjeldahl	Water		H_2SO_4	28 Days
Nitrogen, Nitrate	Water			48 Hours
Nitrogen, Nitrate & Nitrite	Water		H_2SO_4	28 Days
Nitrogen, Nitrite	Water			48 Hours
Nitrogen, Organic	Water		H_2SO_4	28 Days
Non-Methane Organics	Air	Summa Canister		14 Days
Non-Methane Organics	Air	Tedlar Bag		48 Hours
Odor	Water			24 Hours
Oil and Grease/HEM	Water		H_2SO_4	28 Days
Organchlorine Pesticides and PCB's	Water		HCl, $Na_2S_2O_3$	7/40 Days
Organochlorine Pesticides & PCBs	Air	PUF		7/40 Days
Organochlorine Pesticides and PCB's	Water		HCl, $Na_2S_2O_3$	7/40 Days
Organochlorine Pesticides and PCBs	Soil	4oz Glass Jar		14/40 Days
Organophosphorous Pesticides	Soil	4oz Glass Jar		14/40 Days
Organophosphorous Pesticides	Water		HCl, $Na_2S_2O_3$	7/40 Days
Oxygen, Dissolved (Probe)	Water			Analyze within 15 minutes
Paint Filter Liquid Test	Water			N/A
Particulates	Air	Filters		6 Months
Permanent Gases	Air	Summa Canister		14 Days
Permanent Gases	Air	Tedlar Bag		48 Hours
pH	Water			Analyze within 15 minutes
Phenol, Total	Water		H_2SO_4	28 Days
Phosphorus, Orthophosphate	Water			Filter within 15 minutes, Analyze within 48 Hours
Phosphorus, Total	Water		H_2SO_4	28 Days
Polynuclear Aromatic Hydrocarbons	Air	PUF		7/40 Days
Polynuclear Aromatic Hydrocarbons	Soil	4oz Glass Jar		14/40 Days
Polynuclear Aromatic Hydrocarbons	Water		HCl, $Na_2S_2O_3$	7/40 Days
Radioactive Strontium	Water		HNO_3	180 days
Radium-228 Radon Emanation Technique	Water		HNO_3	180 days
Radium-228	Water		HNO_3	180 days
Silica, Dissolved	Water			28 Days
Solids, Settleable	Water			48 Hours
Solids, Total	Water			7 Days
Solids, Total Dissolved	Water			7 Days
Solids, Total Suspended	Water			7 Days
Solids, Total Volatile	Water			7 Days
Specific Conductance	Water			28 Days
Stationary Source Dioxins & Furans	Air	XAD Trap		30/45 Days
Stationary Source Mercury	Air	Filters		6 Months, 28 Days for Hg
Stationary Source Metals	Air	Filters		6 Months, 28 Days for Hg
Stationary Source PM10	Air	Filters		6 Months
Stationary Source Particulates	Air	Filter/Solutions		6 Months
Sulfate	Water			28 Days
Sulfide, Reactive	Water			28 Days
Sulfide, Total	Water		NaOH,ZnOAc	7 Days
Sulfite	Water			Analyze within 15 minutes
Surfactants	Water			48 Hours
Total Organic Carbon (TOC)	Water		H_2SO_4 or HCl	28 Days
Total Organic Halogen (TOX)	Water			14 Days
Tritium	Water		HNO_3	180 days
Turbidity	Water			48 Hours
Uranium Radiochemical Method	Water		HNO_3	180 days
Volatiles	Air	Summa Canister		14 Days
Volatiles	Air	Tedlar Bag		48 Hours
Volatiles	Air	Summa Canister		14 Days
Volatiles	Air	Tedlar Bag		48 Hours
Volatiles	Air	Summa Canister		14 Days
Volatiles	Soil	5035 vial kit or 4oz jar		14 days
Volatiles	Water		HCl	14 Days
Volatiles	Water		HCl	14 Days (7 unpreserved)

ATTACHMENT IX
EMPLOYEE ROSTER AND HIRE DATES

Name	Position	Dept.	Hire Date
Karl Anderson	General Manager	GM	May 20, 1998
Tim Harrison	Quality Manager	QA/QC	May 20, 1998
Daniel Mark	Inorganic Manager	Inorganic	October 25, 1999
Steve Sayer	SVOA Manager	SVOA	May 20, 1998
Heath Banter	VOA Manager	VOA	February 1, 1999
Donna Spyker	Client Services Manager	PM	May 20, 1998
Sharon Strange	Admin Business Manager	Admin	June 24, 1998
Tina Brasher	QA Analyst/Safety Officer	QA/QC	February 28, 2002
Troy Conkright	IT Systems Manager	IT	June 20, 2007
Aimee Allison	Lab Analyst II	VOA	September 25, 2002
Jodie Fislar	Lab Analyst II	VOA	June 24, 2002
Theresa Sheingold	Lab Analyst II	VOA	April 30, 2007
Tina Carroll	Lab Analyst II	VOA	April 25, 2007
Amanda Vasquez	Lab Analyst I	VOA	June 13, 2007
Stacey Baker	Lab Analyst II	VOA	February 22, 2007
Lisa Spratt	Lab Analyst I	VOA	February 20, 2005
Paula Brown	Lab Technician III	VOA	June 14, 1999
Katie Sullivan	Lab Analyst II	SVOA	May 10, 1999
Darrin Tester	Lab Analyst II	SVOA	September 5, 2002
Regina Bedel	Lab Analyst I	SVOA	February 25, 2002
Stephanie Fritz	Lab Analyst I	SVOA	December 13, 2004
India Perry	Lab Technician III	OEXT	February 22, 2005
Marcia Calbert	Lab Technician III	OEXT	March 1, 2004
Marsha Alvarado	Lab Technician III	OEXT	January 16, 2005
Josiah Balogum	Lab Technician III	OEXT	November 20, 2005
LaVonne Armes	Lab Technician III	OEXT	June 25, 2007
Rachel Long	Lab Technician	OEXT	Temp
Felicia Walker	Lab Analyst II	Metals	August 28, 2000
Laura Banter	Lab Analyst I	Wet Chem	May 21, 2004
Cheryl Starkey	Lab Analyst II	Wet Chem	June 9, 2000
Therese DeVilbiss	Lab Analyst I	Wet Chem	June 11, 2007
Andrew Votaw	Project Manager II	PM	June 9, 2004
Mick Mayse	Project Manager III	PM	September 29, 1998
Kenneth Hunt	Project Manager II	PM	October 23, 2006
Phaedra Zucksworth	Project Manager II	PM	May 18, 1999
Mark Davis	Project Manager II	PM	June 1, 1999
Demetrius Witherspoon	Client Services Tech II	Receiving	September 4, 2001
Bill Hegwood	Client Services Tech I	Receiving	October 14, 2002
Lori Childs	Client Services Tech I	Receiving	February 27, 2006
Zach Tesfamichael	Courier	Receiving	August 21, 2006
Darnell Williams	Client Services Tech I	Receiving	April 2, 2007
Damie Rivers	Support Coordinator II	Admin	March 29, 2007
Kelly Jones	Admin. Clerk	Admin	October 27, 2006

STATE OF ILLINOIS

ENVIRONMENTAL PROTECTION AGENCY
NELAP - RECOGNIZED

ENVIRONMENTAL LABORATORY ACCREDITATION

is hereby granted to

PACE ANALYTICAL SERVICES - IN

7726 MOLLER ROAD

INDIANAPOLIS, IN 46268-4163

NELAP ACCREDITED
ACCREDITATION NUMBER #100418

According to the Illinois Administrative Code, Title 35, Subtitle A, Chapter II, Part 186, ACCREDITATION OF LABORATORIES FOR DRINKING WATER, WASTEWATER AND HAZARDOUS WASTES ANALYSIS, the State of Illinois formally recognizes that this laboratory is technically competent to perform the environmental analyses listed on the scope of accreditation detailed below.

The laboratory agrees to perform all analyses listed on this scope of accreditation according to the Part 186 requirements and acknowledges that continued accreditation is dependent on successful ongoing compliance with the applicable requirements of Part 186. Please contact the Illinois EPA Environmental Laboratory Accreditation Program (IL ELAP) to verify the laboratory's scope of accreditation and accreditation status. Accreditation by the State of Illinois is not an endorsement or a guarantee of validity of the data generated by the laboratory.

Ron Turpin
Manager
Environmental Laboratory Accreditation Program

Scott D. Siders
Accreditation Officer
Environmental Laboratory Accreditation Program

Certificate No.: 001849
Expiration Date: 10/12/2008
Issued On: 09/14/2007

State of Illinois
Environmental Protection Agency

Certificate No.: 001849

Awards the Certificate of Approval

Pace Analytical Services - IN
7726 Moller Road
Indianapolis, IN 46268-4163

According to the Illinois Administrative Code, Title 35, Subtitle A, Chapter II, Part 186, ACCREDITATION OF LABORATORIES FOR DRINKING WATER, WASTEWATER AND HAZARDOUS WASTES ANALYSIS, the State of Illinois formally recognizes that this laboratory is technically competent to perform the environmental analyses listed on the scope of accreditation detailed below.

The laboratory agrees to perform all analyses listed on this scope of accreditation according to the Part 186 requirements and acknowledges that continued accreditation is dependent on successful ongoing compliance with the applicable requirements of Part 186. Please contact the Illinois EPA Environmental Laboratory Accreditation Program (IL ELAP) to verify the laboratory's scope of accreditation and accreditation status. Accreditation by the State of Illinois is not an endorsement or a guarantee of validity of the data generated by the laboratory.

Drinking Water, Inorganic

USEPA150.1

Hydrogen Ion (pH)

USEPA180.1

Turbidity

USEPA200.7R4.4

Aluminum	Arsenic	Barium
Beryllium	Cadmium	Calcium
Chromium	Copper	Iron
Magnesium	Manganese	Nickel
Silver	Sodium	Zinc

USEPA200.9R2.2

Antimony	Arsenic	Lead
Selenium	Thallium	

USEPA245.1R3.0

Mercury

USEPA335.4R1.0

Cyanide

USEPA353.2R2.0

Nitrate	Nitrite

Hazardous and Solid Waste, Inorganic

1010

Ignitability

1311

TCLP (Organic and Inorganic)

1312

Synthetic Precipitation Leaching Procedure

6010B

Aluminum	Antimony	Arsenic
Barium	Beryllium	Boron
Cadmium	Calcium	Chromium
Cobalt	Copper	Iron
Lead	Magnesium	Manganese
Molybdenum	Nickel	Potassium
Selenium	Silver	Sodium
Thallium	Tin	Titanium

State of Illinois
Environmental Protection Agency
Awards the Certificate of Approval

Certificate No.: 001849

Pace Analytical Services - IN
7726 Moller Road
Indianapolis, IN 46268-4163

Hazardous and Solid Waste, Inorganic	*6010B*	Vanadium
Zinc		
7196A		
Chromium VI		
7470A		
Mercury		
7471A		
Mercury		
9012A		
Cyanide		
9040B		
Hydrogen Ion (pH)		
9045C		
Hydrogen Ion (pH)		
9050A		
Specific Conductance		
9095A		
Paint Filter		
Hazardous and Solid Waste, Organic		
8015B		
Diesel range organics (DRO)	Gasoline range organics (GRO)	
8021B		
Benzene	Ethylbenzene	MTBE (Methyl-t-butyl ether)
m-Xylene	o-Xylene	p-Xylene
Toluene	Total Xylenes	
8081A		
4,4'-DDD	4,4'-DDE	4,4'-DDT
Aldrin	alpha-BHC	alpha-Chlordane
beta-BHC	delta-BHC	Dieldrin
Endosulfan I	Endosulfan II	Endosulfan sulfate
Endrin	Endrin aldehyde	Endrin ketone
gamma-BHC (Lindane)	gamma-Chlordane	Heptachlor
Heptachlor epoxide	Methoxychlor	Toxaphene
8082		
PCB-1016	PCB-1221	PCB-1232
PCB-1242	PCB-1248	PCB-1254
PCB-1260		
8260B		
1,1,1,2-Tetrachloroethane	1,1,1-Trichloroethane	1,1,2,2-Tetrachloroethane
1,1,2-Trichloroethane	1,1-Dichloroethane	1,1-Dichloroethene
1,1-Dichloropropene	1,2,3-Trichlorobenzene	1,2,3-Trichloropropane
1,2,4-Trichlorobenzene	1,2,4-Trimethylbenzene	1,2-Dibromo-3-chloropropane (DBCP)
1,2-Dibromoethane (EDB)	1,2-Dichlorobenzene	1,2-Dichloroethane
1,2-Dichloropropane	1,3,5-TCB	1,3,5-Trimethylbenzene

State of Illinois
Environmental Protection Agency

Certificate No.: 001849

Awards the Certificate of Approval

Pace Analytical Services - IN
7726 Moller Road
Indianapolis, IN 46268-4163

Hazardous and Solid Waste, Organic

8260B

1,3-Dichloropropane
1,4-Dichlorobenzene
1,2-Dichloropropane
2-Butanone (Methyl ethyl ketone, MEK)
2-Chloroethyl vinyl ether
2-Chlorotoluene
2-Hexanone
2-Methylnaphthalene
4-Chlorotoluene
4-Methyl-2-pentanone (Methyl isobutyl ketone, I
Acetone
Acetonitrile
Acrolein (Propenal)
Acrylonitrile
Benzene
Bromobenzene
Bromochloromethane
Bromodichloromethane
Bromoform
Bromomethane
Carbon disulfide
Carbon tetrachloride
Chlorobenzene
Chlorodibromomethane (Dibromochlorometha
Chloroethane
Chloroform
Chloromethane
cis-1,2-Dichloroethene
cis-1,3-Dichloropropene
Dibromomethane
Dichlorodifluoromethane
Dichloromethane (Methylene chloride)
Diethyl ether
Ethyl ether
Ethyl methacrylate
Ethylbenzene
Hexachlorobutadiene
Hexachloroethane
Isopropylbenzene
Methyl iodide (Iodmethane)
Methyl-t-butyl ether
m-Xylene
Naphthalene
n-Butylbenzene
n-Propylbenzene
o-Xylene
p-Isopropyltoluene
p-Xylene
sec-Butylbenzene
Styrene
t-Butyl alcohol
tert-Butylbenzene
Tetrachloroethene
Toluene
trans-1,2-Dichloroethene
trans-1,3-Dichloropropene
trans-1,4-Dichloro-2-butene
Trichloroethene
Trichlorofluoromethane
Trichlorotrifluoroethane
Vinyl acetate
Vinyl chloride
Xylenes (Total)

8270C

1,2,4-Trichlorobenzene
1,2-Dichlorobenzene
1,3-Dichlorobenzene
1,4-Dichlorobenzene
1-Chloronaphthalene
2,4,5-Trichlorophenol
2,4,6-Trichlorophenol
2,4-Dichlorophenol
2,4-Dimethylphenol
2,4-Dinitrophenol
2,4-Dinitrotoluene (2,4-DNT)
2,6-Dichlorophenol
2,6-Dinitrotoluene (2,6-DNT)
2-Chloronaphthalene
2-Chlorophenol
2-Methylnaphthalene
2-Nitroaniline
2-Nitrophenol
3,3'-Dichlorobenzidine
3-Nitroaniline
4,6-Dinitro-2-methylphenol
4-Bromophenyl phenyl ether
4-Chloro-3-methylphenol
4-Chloroaniline
4-Chlorophenyl phenyl ether
4-Nitroaniline
4-Nitrophenol
Acenaphthene
Acenaphthylene
Aniline
Anthracene
Benzidine
Benzo(a)anthracene
Benzo(a)pyrene
Benzo(b)fluoranthene
Benzo(g,h,i)perlyene
Benzo(k)fluoranthene
Benzoic acid
Benzyl alcohol
Bis(2-chloroethoxy) methane
Bis(2-chloroethyl) ether
Bis(2-chloroisopropyl) ether
Bis(2-ethylhexyl) phthalate
Butyl benzyl phthalate
Carbazole
Chrysene
Dibenz(a,h)anthracene
Dibenzofuran
Diethyl phthalate
Dimethyl phthalate
Di-n-butyl phthalate
Di-n-octyl phthalate
Fluoranthene
Fluorene
Hexachlorobenzene
Hexachlorobutadiene
Hexachlorocyclopentadiene
Hexachloroethane
Indeno(1,2,3-cd) pyrene
Isophorone
m-Cresol (3-Methylphenol)
Naphthalene
Nitrobenzene
N-Nitrosodi-n-propylamine
N-Nitrosodiphenylamine
o-Cresol (2-Methylphenol)
p-Cresol (4-Methylphenol)
Pentachlorophenol
Phenanthrene
Phenol
Pyrene
Pyridine

State of Illinois
Environmental Protection Agency

Certificate No.: 001849

Awards the Certificate of Approval

Pace Analytical Services - IN
7726 Moller Road
Indianapolis, IN 46268-4163

Wastewater, Inorganic

SM2130B,18Ed
Turbidity

SM2310B4a,18Ed
Acidity

SM2320B,18Ed
Alkalinity

SM2340B,18Ed
Hardness

SM2510B,18Ed
Specific Conductance

SM2540B,18Ed
Residue (Total)

SM2540C,18Ed
Residue (TDS)

SM2540D,18Ed
Residue (TSS)

SM2540F,18Ed
Residue (settleable)

SM2550B,18Ed
Temperature

SM4500CL-E,18Ed
Chloride

SM4500Cl-G,18Ed
Chlorine

SM4500CN-CG,18Ed
Cyanide-amenable to chlorination

SM4500F-C,18Ed
Fluoride

SM4500H-B,18Ed
Hydrogen Ion (pH)

SM4500NH3-H,18Ed
Ammonia

SM4500NO3F,18Ed
Nitrate | Nitrate-Nitrite (sum) | Nitrite

SM4500O-G,18Ed
Oxygen - Dissolved

SM4500P-E,18Ed
Phosphorus

SM4500S-D,18Ed
Sulfide

SM4500SO3B,18Ed

State of Illinois
Environmental Protection Agency

Certificate No.: 001849

Awards the Certificate of Approval

Pace Analytical Services - IN
7726 Moller Road
Indianapolis, IN 46268-4163

Wastewater, Inorganic	*SM4500SO3B,18Ed*	Sulfite
SM5210B,18Ed		
Biochemical Oxygen Demand (BOD)	Carbonaceous Biochemical Oxygen Demand (C	
USEPA120.1		
Specific Conductance		
USEPA130.2		
Hardness		
USEPA150.1		
Hydrogen Ion (pH)		
USEPA160.1		
Residue (TDS)		
USEPA160.2		
Residue (TSS)		
USEPA160.3		
Residue (Total)		
USEPA160.5		
Residue (Settable solids)		
USEPA170.1		
Temperature		
USEPA180.1R2.0		
Turbidity		
USEPA200.7R4.4		
Aluminum	Antimony	Arsenic
Barium	Beryllium	Boron
Cadmium	Calcium	Chromium
Cobalt	Copper	Lead
Magnesium	Manganese	Molybdenum
Nickel	Potassium	Selenium
Silver	Sodium	Thallium
Tin	Titanium	Vanadium
Zinc		
USEPA305.1		
Acidity		
USEPA310.1		
Alkalinity		
USEPA325.2		
Chloride		
USEPA330.5		
Chlorine		
USEPA335.4R1.0		
Cyanide		
USEPA340.2		
Fluoride		

State of Illinois
Environmental Protection Agency

Certificate No.: 001849

Awards the Certificate of Approval

Pace Analytical Services - IN
7726 Moller Road
Indianapolis, IN 46268-4163

Wastewater, Inorganic	*USEPA350.1R2.0*	
Ammonia		
USEPA351.2R2.0		
Total Kjeldahl Nitrogen		
USEPA353.2R2.0		
Nitrate (total)	Nitrate-Nitrite (sum)	Nitrite
USEPA360.1		
Oxygen		
USEPA365.2		
Orthophosphate (as P)	Phosphorus	
USEPA375.4		
Sulfate		
USEPA376.2		
Sulfide		
USEPA377.1		
Sulfite		
USEPA405.1		
Biochemical Oxygen Demand (BOD)	Carbonaceous Biochemical Oxygen Demand (C	
USEPA410.4R2.0		
Chemical Oxygen Demand (COD)		
USEPA420.2		
Phenolics		
Wastewater, Organic		
USEPA624		
1,1,1-Trichloroethane	1,1,2,2-Tetrachloroethane	1,1,2-Trichloroethane
1,1-Dichloroethane	1,1-Dichloroethene	1,2-Dichlorobenzene
1,2-Dichloroethane	1,2-Dichloropropane	1,3-Dichlorobenzene
1,4-Dichlorobenzene	2-Chloroethylvinyl ether	Acrylonitrile
Benzene	Bromodichloromethane	Bromoform
Bromomethane	Carbon tetrachloride	Chlorobenzene
Chloroethane	Chloroform	Chloromethane
cis-1,3-Dichloropropene	Dibromochloromethane	Dichloromethane (Methylene chloride)
Ethylbenzene	Methyl tert-butyl ether (MTBE)	Tetrachloroethene
Toluene	trans-1,2-Dichloroethene	trans-1,3-Dichloropropene
Trichloroethene	Trichlorofluoromethane	Vinyl chloride
Xylenes (total)		

Pace Analytical™

STATEMENT OF QUALIFICATIONS

Pace Analytical Services, Inc.
Indianapolis Laboratory
7726 Moller Road
Indianapolis, IN 46268

(317) 875-5894
fax (317) 872-6189
website: www.pacelabs.com

Revised 26Jan2007

Table of Contents

Section 1: Company Profile 3

Section 2: Capabilities & Services 6

Section 3: Project & Data Management 13

Section 4: Quality Assurance 17

Section 5: Experience 24

I.

Company Profile

Nationwide Laboratories with a history of the Highest Quality Analytical Service

Pace Analytical Services is a privately held, full service, environmental testing firm, operating eleven laboratories nationwide. Our core business is in providing analytical services. The Pace Analytical laboratory network has expertise in environmental analytical chemistry, with additional areas of expertise in field analysis and sampling. With this focus and our broad experience base, Pace Analytical can deliver the quality, service, and systems required to meet your specific needs.

Pace Analytical was formed in 1995, by the current President and CEO, Steve Vanderboom. The company is comprised of eleven laboratories with a long history of quality environmental services. Pace Analytical provides analytical services for clients ranging from federal and municipal government to industrial firms, environmental consulting groups, and waste management firms.

Over the years, Pace Analytical has developed and continues to develop a strict system of Quality Assurance/Quality Control protocols. Pace Analytical has also developed an advanced data management system, which allows for efficient, flexible data reporting. Together, the two systems ensure data reliability and timeliness.

Pace Analytical Services have experts throughout the company working together to form a national system of laboratories with a local presence. Our goal is to continuously combine our expertise in the laboratory with customized solutions to meet the specific needs of our clients. By providing the right chemistry and the right solution, Pace Analytical has become known as a leader in the industry with satisfied, long-term clientele.

The Pace Analytical Difference

The strength of our company comes from how we are organized. We understand how important it is to develop long-term, on-going communication with our clients. We have integrated local support teams in each lab that continuously seek to meet the needs of our clients. The corporate office provides support for the local labs with additional capacity, specialty services, and additional experts in all areas of the business, in order to ensure that client needs are met.

Leadership Through Expertise

Across the Pace Analytical system, you will find experts in many aspects of environmental analytical services. Pace Analytical makes these experts available to you via direct lab contacts or through the Pace Technical Network.

Pace Analytical has also made significant investments in quality at both a corporate and a local level. One of the most important initiatives at Pace Analytical is consistency throughout the network. Standard processes have been put in place in order to ensure that the labs in the network are not simply a confederation of laboratories with the name Pace Analytical on the door, but truly an integrated system of laboratories. At the corporate level, Pace Analytical has created universal SOPs and a corporate Quality Manual that can be appended at a local level. This helps to ensure consistency in project performance, in addition to providing flexibility at the lab level. Another tool that aids in consistency is the definition of analytical methods. Methods are defined in a way that clears up ambiguities or omissions, and together with the SOPs, they help to ensure methods are performed in the same consistent manner across the entire Pace Analytical system. It is ultimately important for our labs to understand the regulations and the methods as defined by the regulators. We invest in developing and maintaining method and regulation knowledge, and also have the expertise to develop specific methods for our clients that may help in unique situations.

Leadership Through Applied Technologies

Our commitment to technology is driven by our commitment to total quality. We continue to invest in order to give our clients faster results, enhanced quality, accurate packages, and easy to interpret results.

Environmental Project Information Control (EPIC) is the Laboratory Information Management System that is currently integrated into labs throughout the Pace Analytical network. It is based on an Oracle database, which gives the system the flexibility to adapt to many of your specific project requirements. It allows us to create standardized reports and invoices across the network. Regardless of which lab you are using, they will have a complete understanding of your expectations and requirements.

By continuously studying new technology and methods, we are able to customize methods for site-specific requirements and keep up to date with exact regulatory requirements. Understanding how technologies such as immunoassay and solid phase extraction can be used in the lab and in the field means that Pace Analytical has the best solution regardless of the situation.

Leadership Through Pace Analytical Personnel

Capabilities, capacity, and technology would mean nothing if we didn't have qualified, dedicated professionals throughout the network. Continuously updated training on quality and technical issues are provided to all Pace Analytical employees. As a result, Pace Analytical personnel are known as leaders throughout the industry. In addition to having the skills and training, our personnel are focused on you, the client. The goal is to have a continuous dialogue, from pre-project definition, to providing updates on the status in the labs, to the interpretation of the final results.

Corporate Philosophy

The criteria for selecting an analytical laboratory have changed significantly in recent years. Increased environmental liabilities have altered the attitudes of users and providers of laboratory services. Quality and the ability to implement innovative and cost effective ideas to achieve total customer satisfaction are now the primary criteria.

Our Statement of Purpose at Pace Analytical Services is to provide our customers with scientific information for the restoration and preservation of our environment. Providing analytical services is an important link to the preservation of our environment. We are building Pace Analytical Services on a foundation of our **Core Values** that guide our decisions each day.

Strict adherence to our Core Values, as we model our capabilities and services to meet our customer's needs, will be the primary key to our future success.

Pace Analytical Services, Inc. Statement of Purpose

To meet the business needs of our customers for high quality, cost-effective analytical measurements and services.

Core Values

- **Integrity**
- **Value Employees**
- **Know Our Customers**
- **Honor Commitments**
- **Flexible response to demand**
- **Pursue Opportunities**
- **Continuously Improve**

A Nationwide System of Local Laboratories

Today, the Pace Analytical system offers extensive capacity and a broad range of specialty services, allowing Pace Analytical to meet the environmental analytical needs of our clients. In addition, our investments in standardization provide us with the ability to maximize the capabilities and capacity of all the laboratories, providing extra assurance that clients' turn-around times are met.

Pace provides **Analytical Services** through an integrated network of modern, fully-equipped laboratories that can analyze a variety of sample matrices ranging from air, to water, to hazardous wastes. Capabilities in the network include the following:

- Full Organic and Inorganic analyses
- Air Toxics
- Aquatic Bioassay
- Explosives
- Ambient air sampling / Stack testing
- Industrial Hygiene
- Dioxin / furan analyses
- Mobile laboratories

Pace Analytical utilizes U.S. EPA, ASTM, Standard Methods, NIOSH, and other accepted test procedures and methods, in accordance with both federal and state environmental regulations.

Pace Analytical's nationwide laboratory network provides convenient service to all parts of the country. Our laboratories provide comprehensive analytical support to many Fortune 500 companies and engineering/consulting firms, as well as State and Federal agencies, including EPA, Army Corps, Air Force, and the Navy. Pace Analytical Services also have extensive state certifications.

II.

Capabilities & Services

The Pace Analytical laboratory system is fully equipped and expertly staffed to provide a full range of services for any environmental project:

- ***Analytical Services***
- ***Field Services***
- ***Specialty Services***

Pace Analytical's **Field Services,** based in our Minneapolis office, are provided by a staff of full-time, environmental professionals and technicians with years of experience sampling air, water, soil, and other matrices using a variety of EPA and proprietary methods. Our staff includes degreed chemists, environmental scientists, and experienced technicians who are trained to safely and accurately collect and analyze representative field samples. Pace Analytical has a fleet of specially-equipped vehicles to access areas where sample collection can present difficult or unusual problems. The field services Pace Analytical offers include:

- Ground Water Monitoring
- Waste Water Monitoring
- Hazardous Waste Monitoring
- Flow Monitoring
- Soil & Gas Sampling
- PCB Services
- Air Sampling

In addition to providing the services listed above, many Pace Analytical labs assist clients by setting up routine sampling and reporting schedules for required permit monitoring. Our chemists, environmental scientists and field technicians have years of experience combining the related fields of analytical laboratory and field sampling services to produce the highest quality, legally defensible data. The following is a list of industry related areas in which Pace Analytical has a strong experience base:

- Chemical/Pharmaceutical
- Waste Management/Landfills
- Pulp & Paper
- Petroleum
- Remediation Sites – Superfund Sites

Pace Analytical's **Federal Program** experience is extensive. As one of the first laboratories in the country performing DOD work, Pace Analytical has developed a tremendous amount of experience in all federal program arenas. Pace Analytical is one of a just a few laboratories to hold the following list of federal and national credentials:

- Air Force Center for Environmental Excellence (AFCEE)
- Army Corps of Engineers, Missouri River Division (ACO/MRD)
- Army Environmental Center (AEC)
- Naval Facilities Engineering Service Center (NFESC)-(formerly NEESA)
- DOE Hazardous Waste Remediation Action Program (HAZWRAP)
- EPA Contract Lab Program (CLP Routine & Special Analytical Services)
- Department of Agriculture Soil Import Permit

This extensive list of credentials reflects Pace Analytical's broad experience, as well as its capability to perform well on outside, rigorous audits. Pace Analytical has a strong quality assurance program that is managed by a separate, independent Corporate Quality office and laboratory Quality Assurance offices.

Specialty Services

Pace Analytical offers a broad variety of specialty services that are outlined in this section. It is in providing these services that we offer true comprehensive services, which can help you to streamline environmental projects.

Aquatic Toxicity/Bioassay

As the Pace Analytical National Aquatic Toxicity Laboratory, our lab in Asheville, NC, offers both fresh water and salt water bioassay testing, and is certified and approved in states across the nation. The lab also is skilled in performing site-specific toxicity studies. With this expertise, we are able to offer modified site-specific protocol, as well as approved EPA and state methods. Tests include a broad range of acute and chronic tests using a wide variety of fresh water and marine or estuarine species.

Air Sampling
Pace Analytical's Air Sampling Services were developed to assist industrial and public sector clients meet the increasing level of regulations covering air emissions. Through our Charlotte, and Minnesota labs, Pace Analytical offers a variety of air sampling services, including air pollution source testing and ambient air monitoring. Pace Analytical provides teams of experienced professionals to perform sampling for various criteria and non-criteria airborne pollutants, and can mobilize sampling teams to serve most areas of the country in a timely manner. We can set up long-term or short-term ambient air networks to monitor air pollutants, hydrocarbons, particulates, and meteorological conditions. Pace Analytical is proficient in a variety of sampling techniques, including passivated stainless steel (SUMMA™) sampling canisters. In addition, as needed, Pace Analytical staff can develop many unique sampling trains to accommodate more specialized sampling situations.

Air Toxics
Pace Analytical provides clients with analytical support for ambient air monitoring programs, source emission monitoring, landfill gas monitoring, soil gas characterization, as well as analytical measurements to satisfy requirements under state and federal government air monitoring programs. Laboratory personnel have extensive experience in air toxics measurements, and methods development; and our air sampling expertise gives us a higher level of in-lab knowledge. Pace Analytical has provided high quality data and project management to Fortune 500 companies, local, state and federal government agencies, and commercial consulting/engineering firms. Certified clean SUMMA™ canisters and sampling media are among the many quality control mechanisms Pace Analytical employs to ensure that results accurately reflect the true sample.

Mobile Analytical Laboratory
Mobile laboratory services are provided through our Minnesota laboratory to clients nationwide. These services can range from screening techniques to full EPA method compliant data packages with full QA/QC and electronic deliverables. Pace Analytical mobile labs are staffed with highly trained personnel and equipped with the same state-of-the-art instrumentation as our fixed labs. Our mobile labs utilize agency-approved methods as well as developing performance based methods, and immunoassay technology, incorporating more innovative techniques. Pace Analytical mobile labs offer the added benefits of reduced project duration and significant overall project savings.

Explosives
Through the Minnesota laboratory, Pace Analytical offers analytical testing for explosives and munitions, and their degradation products in water and soil. Pace Analytical has extensive experience in explosives testing, and is certified by the Army Environmental Center (AEC–formerly USATHAMA) for a broad list of compounds, including nitrotoluenes, nitrobenzenes, nitroglycerin, HMX, RDX, PETN, and TETRYL. Certified methods include UW-35 (water) and LW-32 (soil), which are both HPLC methods for the above compounds. Pace Analytical is also certified by the Missouri River Division of the Army Corps of Engineers for similar compounds using SW-846 methods 8330 and 8331. Pace Analytical's work with explosives at federal facilities throughout the U.S. provides clients with the analytical and technical base required for explosives analyses.

Dioxins and Furans

Pace Analytical laboratories have been providing dioxin/furan analysis for several years, in support of industrial compliance, federal regulatory/monitoring efforts, and the remedial activities of military and civilian engineering firms. Extensive experience with all USEPA methodologies, in demanding projects with difficult matrices has forged a "culture of quality" that insures precision, accuracy and data integrity. Pace Analytical's impressive list of dioxin clients includes the USEPA, The United States Army Corp of Engineers, and virtually every major federal, state and commercial entity involved in dioxin monitoring nationwide. Because, much of the rest of the world defers to the EPA's expertise in the area of dioxin/furan, Pace Analytical is able to serve global dioxin testing needs as well with EPA methodology and USDA sample import licensing. At the Minneapolis laboratory Pace Analytical maintains a state of the art dioxin testing facility with modern instrumentation, a talented, highly experienced scientific staff and significant dioxin analytical capacity. Trace level dioxin/furan analysis is performed on VG high-resolution mass spectrometers (HRGC/MS), while non-trace analysis is performed on Hewlett Packard quadrapole mass spectrometers (GC/MS). Pace Analytical maintains certifications in the majority of states where it is a requirement to perform analytical work.

Pace utilizes state-of-the-art analytical equipment to maintain a technologically advanced laboratory facility.

The Indianapolis laboratory's major instrumentation includes:

Organic Analysis

# of Units	Type of Equipment
8	Gas Chromatograph/Mass Spectrophotometers (GC/MS) ◊ 2 Hewlett Packard systems equipped with PT^2 linked Dual Concentrators with Archon autosamplers for Volatile Analyses ◊ 2 Hewlett Packard systems equipped with Archon autosamplers for Volatile Analyses ◊ 3 Hewlett Packard systems equipped with HP autosamplers for Semi-volatile Analyses ◊ 1 Hewlett Packard system equipped with HP autosamplers performing Selective Ion Monitoring (SIM) for Semi-volatile Analyses
9	Gas Chromatographs (GC) ◊ 2 Hewlett Packard systems with Dual Channel Electron Capture Detectors for PCB and Pesticide Analyses ◊ 2 Hewlett Packard systems with Flame Ionization Detectors for Fuel (Diesel) Analyses (with GC Express Heated Column) ◊ 3 Hewlett Packard systems with Photo Ionization Detectors for Volatile Analyses ◊ 1 Hewlett Packard system with Flame Ionization Detector for Fuel (Gasoline) Analyses ◊ 1 Hewlett Packard system with Flame Ionization Detector for Industrial Hygiene and air cartridge analyses ◊ Each GC system is equipped with Target Data Systems and autosampler capabilities

Organic Analysis, cont.

# of Units	Type of Equipment
3	Dual Horn Ultrasonic Extraction Units
2	TurboVap Sample Concentrators
2	TCLP Extractors ◊ 10 Individual Positions
8	Zero Head Space Extractors (ZHE) for TCLP analyses
2	TCLP Hazardous Waste Pressure Filter
1	Microwave Digestor (MARS)

Inorganic Analysis - Including Industrial Hygiene, Ambient Air Metals and Particulate Matter

# of Units	Type of Equipment
1	Inductive Coupled Plasma Atomic Emission TJA 61E Trace Analyzer (ICAP) ◊ 28 Simultaneous Metals ◊ Computer Controlled with Background Correction
1	Atomic Absorption Spectrophotometer ◊ Graphite Furnace, Autosampler, Zeeman Correction, EDL Power Supplies and computer control
1	Mercury Analyzer ◊ with Fluorescence and AA Detectors, computer driven, auto sampler
1	Auto Analyzer Lachat Quick Chem 8000 ◊ Dual Channel Analyzer ◊ Computer Driven
2	Spectrophotometers
5	pH Meters ◊ with various ion selective electrodes
1	Conductivity Meter
1	Dissolved Oxygen Meter
1	Flashpoint (Ignitability) Analyzer

III.

Project & Data Management

We believe that good communication is the key to the success of your analytical project.

- ***Approach to Project Management***
- ***Data Management:***

  Environmental Project & Information Control (EPIC)

Approach to Project Management

Clients who enlist Pace Analytical's services expect our diligence in understanding their needs so that we may produce high-quality data that addresses their regulatory compliance requirements. At Pace Analytical, we believe a critical component to satisfying this expectation is the investment in Technical Project Managers who plan and coordinate the execution of projects from inception to final review. Our investment in this technical project management staff assures that our human and capital resources will operate in an effective team effort with the singular purpose of satisfying our clients' needs.

All sampling and analytical projects are managed by the Project Managers in the laboratories. The Project Managers have several management functions at Pace Analytical, specifically with regard to quality data and timely delivery. The Project Manager is the person with overall responsibility for the completion of a project at Pace Analytical.

Project Management Process

Pace Analytical's Technical Project Manager's involvement begins at the proposal/project initiation stage, during which they provide technical and logistical input to craft a viable project management plan. Pre-project planning is critical to developing a mutual understanding of each project's Data Quality Objectives. Pace Analytical's other technical staff (*e.g.*, Quality Managers and Chemists) are utilized during the pre-project planning stages on an "as-needed" basis.

Upon initiation of the project, the Project Manager communicates directly with our clients, field consultants, regulators, and Pace Analytical's laboratory operations staff to coordinate the execution of all project requirements. The primary management tool utilized for project management is the computerized Laboratory Information Management System (LIMS) that organizes, plans, stores and disseminates project requirements throughout the project. Effective lines of communication between all project participants are

imperative to the successful completion of any project. The LIMS is a particularly important tool in assuring that effective lines of communication are maintained.

Our process begins with the development of the project scope according to the following parameters:

- Data Quality Objectives
- Site/Project History
- Location
- Timing (estimated receipt of samples)
- Sample Matrix (matrices)
- Methods/Detection Limits
- Project Size
- Project Duration
- QC Deliverables
- Prior Analytical Experience
- Expected Turnaround Times
- Sampling and Shipping Supplies

This information is generally gathered at the proposal stage of the project and entered into the LIMS. The initiation of a project includes the following steps:

- Project Awarded and Contract Signed
- Pace/Client Project Personnel Assigned
- Pre-project Coordination Meeting Held
- Quality Assurance Project Plan Developed
- Sampling, Shipping Supplies and Instructions Sent
- Project and Chain-of-Custody Received
- Sample Analysis Data Entry Form (SADEF) Generated
- Project Released for Analysis

The LIMS is capable of accessing the project and/or samples at any point of analysis. The Pace Analytical Project Manager monitors the progress of the project through the LIMS and notifies the client of any discrepancies.

Data Management

Introduction

Pace Analytical is among the leaders in our industry in developing and implementing advances in computer information systems. We are making these investments because we know ***our main job is to provide our clients with accurate and timely information.*** Our computer systems are the primary tools we use to pursue the quality and service goals of our company - and they help our clients to do their job better, too.

Our laboratories have implemented Laboratory Information Management Systems (LIMS) that provide them with the major functions listed below. Pace Analytical laboratories also utilize various forms generation software packages, which allow for automated routing of instrument-generated data directly into processors that then develop complex data deliverable packages. This helps to provide a consistent deliverable package to our clients, especially those involved in federal programs work.

LIMS – General Description

Pace Analytical's LIMS provides for a real-time, multi-user data collection and reporting system. The system provides for automatic preparation of sample receipt and check-in documents, preparation of work lists by laboratory and section, management reporting on laboratory performance, and flexible laboratory reporting, including selection of QC reporting options. Entry of results is also accomplished in real-time, and

the system provides a two-step results entry and validation process.

Support for our LIMS system is accomplished by combining a centralized corporate information systems staff, and skilled professionals in our laboratories. All Pace Analytical laboratories are inter- connected by leased telephone lines, providing for inter-laboratory sample status inquiry, remote access to centralized accounting applications, and file transfer of transactions and reports.

Major LIMS Functions
The major functions performed by the LIMS are outlined below:

Project Definition/Sample Pre-Check-In: This feature allows a Pace Analytical project manager to load into the LIMS the vast majority of the information that sample check-in will need.

Sample Check-in: All samples delivered to Pace Analytical's sample receiving areas are entered into the LIMS and organized by project number. All relevant project information accompanying samples is entered into the system at sample check-in, unless the project was "pre-defined", such as client name, client number, project name, project description, sample matrix, analytical method, QC level, due date, etc.

Scheduling: Each day, Pace Analytical department managers receive computer reports showing those projects which are still open within each analytical area. Based on these reports, managers set priorities and schedule work appropriately to meet client needs.

Project Management: Pace Analytical has established a separate client services area whose function is to manage all project aspects. An important element of this function is to coordinate the compilation of data on projects involving analyses in multiple departments. Other important functions of this area are to maintain client liaison, expedite report delivery, help laboratory managers schedule work, etc. For large project commitments, Pace Analytical designated a specific Project or Program Manager. Project Managers find the LIMS to be an effective tool for achieving project schedules, budgets and objectives, and maintaining client satisfaction.

Data Entry: All data generated within each analytical area are entered into the computer system according to project number. The data are not entered until all quality assurance and quality control checks have been made by the analytical personnel. Project management/client services staff routinely review outstanding projects to make sure appropriate progress is being made on the completion of required analyses.

Data Reporting: When all analyses have been completed and entered, a draft final report is generated from the computer system. The draft final report is reviewed by all appropriate management staff whose analytical areas have been involved on that project. In addition, the reports are validated by the quality department. Upon review, any corrections are made before issuing a final report, which is sent out to the client. In addition to the hard copy, the report can be made available as an electronic file that allows you to re-format data and/or print on your printer.

Management Information: The LIMS also provides information to management to aid in decision-making. Information concerning the numbers of samples analyzed, the number of specific analyses performed, holding time status, and other information is used by Pace Analytical management to track capacity,

efficiency and productivity and, ultimately, the need to add future capacity.

Invoicing: Automated invoicing is accomplished at the time of project initiation or by the input of pricing information during sample/project entry. This program serves to minimize invoicing errors.

Financial Reporting: The LIMS is used to produce monthly financial statements. Data is generated on revenues, expenses, and capital expenditures.

EPIC - our customized LIMS

Pace Analytical has completed the implementation of a standardized LIMS system for all of our laboratories. This custom-designed system is called EPIC (Environmental Project and Information Control). EPIC's primary goal is to provide fast, accurate, and timely information to our clients. It is based on an Oracle relational database, which gives the system the flexibility to adapt to many of your specific project and reporting requirements. Since EPIC had been installed in every Pace laboratory, we are all linked together to form a common database of information on single network.

EPIC is tailored to answer the needs of environmental laboratory operations. From sample check-in to invoicing, EPIC models the laboratory operations - eliminating redundant processes and data entry, and allowing for greater standardization in areas such as quality control batching, data reporting, and billing throughout the Pace Analytical system. The benefit to our clients will be that information can be stored and reported in a similar way regardless of which lab performs the work. You gain the advantage of local service across the country, and keep the efficiencies at a corporate level by dealing with a common set of reporting and invoicing formats, and consolidated data base management.

IV.

Quality Assurance

Pace Analytical has made significant investments to build a truly integrated laboratory system. Our Quality Assurance Office supports this effort by establishing standard processes that create the foundation of our total quality program

Pace Analytical is committed to providing the highest quality product to its client. The validity and reliability of the information generated is maximized by the adherence to documented quality control procedures and quality assurance protocols. Pace Analytical emphasizes the application of sound quality assurance/quality control principles beginning with the initial planning of the project through all the field and laboratory activities and ultimately to the generation of the final report. The principles of data quality objectives, representative data, completeness, comparability, precision and accuracy are applied.

Pace Analytical provides the resources, including facilities, equipment and personnel, to ensure the adherence to rigorous Quality Assurance/Quality Control protocols. Individual Quality Assurance Project Plans may be developed for monitoring analytical projects to conform to the established QA/QC protocols.

Quality Assurance Elements

Some elements of Pace Analytical's total quality program are:

- **Standard Laboratory Quality Manual applied to all Pace Analytical Laboratories**
- **Development and maintenance of Standard Operating Procedures:** The goal is consistency throughout the company yet allowing sufficient flexibility to account for regional regulatory differences that may be experienced by the client.
- **Training (Technical Programs)**
- **Training Module Development, Evaluation & Recognition**
- **Certification/Credential Management:** National, Federal, State, Local, Industry
- **Job Classification System Development**
- **Laboratory Audits:** Audits are performed to ensure uniformity and compliance with appropriate requirements. The audit process is technically oriented and involves all aspects of the laboratory operation.
- **Technical Programs:** Development, Coordination, & Implementation

- **Instrument Evaluation**
- **Efficiency, Productivity, & Capacity**
- **Quality Manager:** Each Laboratory has a Quality Manager responsible for the quality progress of the laboratory.
- **Professional Participation:** NELAC, INELA, ACIL, A2LA, EPA, ACS, etc.

Pace Analytical has developed into a network of local labs with a national presence. This development has necessitated the structuring and organization of operational policies and procedures to enable us to function in a contiguous fashion throughout all our locations. At Pace Analytical, we continually update our Standard Operating Procedures (SOPs) to accommodate improving technologies, and to remain in compliance with current regulatory requirements.

Organization

As shown below, the Quality Office in each laboratory is independent from operations and reports to the highest level within that structure. This reporting hierarchy allows autonomous quality assurance activities within the laboratory system. Pace Analytical also has a Corporate Quality Office to ensure consistent quality throughout our laboratory system.

Program Objectives

The major elements of the Laboratory Quality Assurance/Quality Control Program are summarized below:

- Use of appropriate methodologies by technically competent, well-trained personnel with state-of-the-art instrumentation and equipment.
- Adherence to well-defined standard operating procedures with emphasis on good laboratory and measurement practices.
- Analysis and assessment of quality control samples including (but not limited to) matrix spike samples, duplicate samples, surrogate spikes, blanks, and independent laboratory control standards.
- Participation in external quality evaluation programs including Water Pollution and Water Supply (WP & WS) Study Programs, DOD and numerous state programs.
- Maintenance of accreditation by State, Federal, and other applicable agencies for work performed.
- Monitor internal and external compliance to procedures and to assess the performance of the analytical methods.

Consistency/Standardization

To facilitate the integration of the quality systems program elements noted above, and to assure consistency in methods and practices in each of our labs, the Corporate Quality office has developed the following initiatives:

Work Processing and Training Documents: Pace Analytical has invested significant time in defining how processes are performed across all our labs. These documents ensure standardization of process completion and analyst training.

Standard Operating Procedures (SOPs): The Pace Analytical Corporate Office has developed standardized SOPs. The laboratory can then develop their specific addenda to reflect items specific to their laboratory. These standardized SOPs allow Pace Analytical to deliver a more consistent product to our clients. The Corporate Quality Office also issues company-wide Quality SOPs that are implemented in each laboratory. These include SOPs on data integrity, document control, safety, waste disposal, and other non-method-specific procedures.

Sample Containers: Pace Analytical has standardized its sample containers across the company. These sample containers are pre-cleaned and certified, satisfying the most stringent quality assurance requirements. Bottles are provided to Pace Analytical by its vendor with full QA/QC and Certificate of Analysis. This standardization provides our clients with another level of confidence. Our vendor's Quality Assurance Program guarantees strict adherence to proper methodology, accurate reporting of analytical results and traceability to full laboratory documentation.

Internal Audits: On a periodic basis, an internal audit is held at each of our laboratories. The purpose of these audits is the same as those performed by external auditors - to ensure that methods are followed, working environments are optimized, standard operating procedures, training procedures, and quality assurance plans are both documented and followed. These audits also help Pace Analytical to ensure company-wide consistency in basic Standard Operating Procedures.

Quality Program Organization

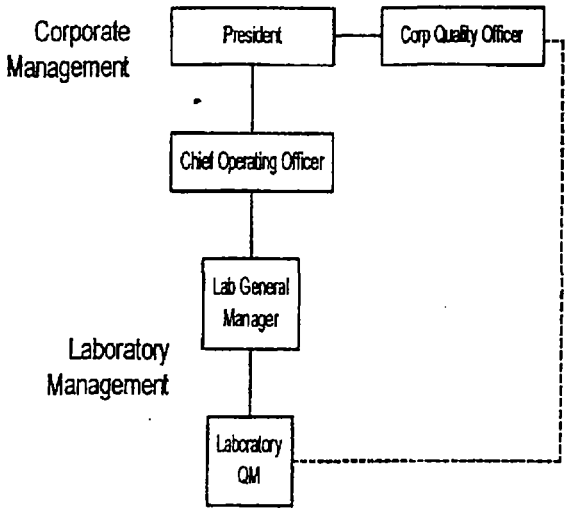

Quality Control Deliverables

Although the fundamentals of the laboratory quality control program are applied consistently, Pace Analytical Indianapolis offers several different levels of quality control deliverables. This is designed so the client may meet their quality reporting objectives.

LEVEL	DESCRIPTION
2	Report Data plus complete Quality Control (QC) data; blanks, spikes, duplicates (including matrix spike duplicates), laboratory control samples, relative percent difference (RPD), % recovery
3	Items in Level 2 plus calibration information and a narrative discussing quality issues
4	All items in Levels 2 & 3, plus the raw data sheets and chromatograms and a narrative discussing quality issues.

Certifications

On the following page is a list identifying the Federal and State credentials Pace Analytical's Indianapolis lab maintains. Third-party involvement assures you that our services are provided in a high-quality manner and that methodologies are standardized.

Indianapolis Laboratory Certifications

Environmental

Accreditations:

- NELAC: National Environmental Laboratory Accreditation Conference

State Certifications:

- Indiana
- Illinois (NELAC accreditation)
- Ohio VAP
- Kentucky UST
- West Virginia
- Kansas
- Pennsylvania

Certified to Work For:

- Indiana Department of Environmental Management (Contract Lab)

Quality Assurance Plan Overview

Pace Analytical has developed a Quality Manual (QM) written in compliance with the elements required in the US EPA "EPA Requirements for Quality Assurance Project Plans for Environmental Data Operations," EPA QA/R-5 (8/94). This manual defines the systems of quality control and quality assessment that constitute the comprehensive Quality Assurance Programs at Pace Analytical. Each laboratory within the system must, at a minimum, follow the requirements as outlined in the manual. In many instances, as a result of specific program requirements, the laboratories adhere to more rigorous standards than those outlined in the Quality Manual. Following is a list of the subjects covered in the Quality Manual:

- **Laboratory Organization & Responsibility:** As noted previously, the quality department operates autonomously from the operations.

- **Quality Assurance Objectives:** The objectives are to provide a uniform basis for sampling, sample handling, instrument maintenance and calibration, methods control, performance evaluation and analytical data generation and reporting.

- **Sampling Procedures:** The purpose of this section is to provide clear, consistent guidance on methods for preparing containers for sample collection, and where appropriate, sample collection methods.

- **Sample Custody:** Sample shipments are received at the sample receiving area. Sample custodians verify the quantity and condition of shipping containers received against the shipping manifest/chain-of-custody.

- **Calibration Procedures & Frequency:** Most measurements taken in the laboratory are based upon comparison to reference standards as analyzed by the standard method. The standard results are utilized to generate calibration curves or calibration factors.

- **Analytical Procedures:** Pace Analytical performs EPA, SW-846, ASTM, NIOSH, and various other regulated methodologies.

- **Data Reduction, Validation, & Reporting:** All data generated within each analytical area are entered into the computer system according to project number. The data are not entered until all quality assurance/quality control checks have been made by the analytical personnel. When all analyses have been completed and entered, a draft final report is generated from the computer system. The draft final report is reviewed by all appropriate management staff whose analytical areas have been involved in the project and validated by the quality department. Upon review, corrections are made before issuing a final report, which is sent out to the client.

- **Internal Quality Control:** The quality assurance practices consist of general quality control and assessment procedures that are adapted to the specific operating conditions within each section.

- **Performance and System Audits:** In addition to the internal audits performed by the Corporate Quality Office and external audits by outside agencies, Pace Analytical's records, logs, and data files are audited for completeness, accuracy, and adherence to standard operating procedures. The audit team members include the Quality Manager and any other associated personnel.

- **Preventive Maintenance:** Pace Analytical maintains service contracts or has strict maintenance schedules for most major analytical instrumentation, including all gas chromatographs, gas chromatograph/mass spectrometers, balances, atomic absorption, and inductively coupled plasma instruments.

- **Assessment of Precision, Accuracy, Completeness, Representativeness, & Comparability:** The Quality Control Program at Pace Analytical uses precision and accuracy data to determine the acceptability of analytical results.

- **Corrective Action:** If, as a result of audits or QC sample analyses, methods systems prove to be unsatisfactory, corrective action shall be implemented.

- **Quality Assurance Reports to Management:** Quarterly reports are provided by the Quality Manager to the Corporate Director of Quality and Laboratory General Manager. This report addresses the quarterly quality assurance activities including details of corrective actions implemented, audit results, and QC summary information. In addition to quarterly reports, senior management reviews weekly performance measurements.

- **SOPs/Document Control:** SOPs are also a standard part of the Pace Analytical QA Program. The SOPs provide the level of detail necessary for laboratory personnel to implement the QA program requirements in a uniform, coordinated manner. All QAPPs and SOPs are controlled documents. As such, all holders of controlled copies will be issued all revisions. This ensures possession of the current revision. Each laboratory employee working with a specific document or procedure has immediate access to a controlled copy. Controlled copies are maintained by the Quality Manager of each laboratory.

- **Personnel qualifications and training:** Pace Analytical has developed an extensive job classification system that identifies the minimum requirements of each job, educational requirements, practical laboratory experience, and major job responsibilities that are consistent with federal program requirements. The Corporate Quality department coordinates technical training module development for the company. Technical modules include instruction on proper use of instrumentation, quality practices, documentation requirements, data interpretation, and routine maintenance. Verification of technical training occurs periodically and during the internal audits held within each laboratory.

V.

Experience

Pace offers its multi-location clients the ability to contract under one set of terms and conditions through an integrated system of laboratories, while maintaining responsive service at a local basis.

Pace Analytical's laboratories have amassed a wealth of in-depth project experience through their years in the environmental laboratory industry. Pace Analytical has utilized its strong technical expertise to support a wide range of projects in environmental monitoring, assessment and remediation. Our client base includes industrial clients, consulting/engineering firms, and local, state and federal government agencies. Pace Analytical has also served clients directly and in support of numerous prime contractors under regulatory programs of various branches of the Department of Defense.

Our extensive national coverage, combined with comprehensive accreditations and capabilities, enables Pace Analytical to satisfy the needs of both local or single-location clients and multi-location clients, under a broad range of regulatory protocols.

Pace Analytical is committed to providing the necessary resources to maintain high standards of excellence and total quality in responding to a wide range of environmental market and client needs. Pace Analytical endeavors to develop and maintain long-term relationships with our clients.

The following profiles are representative of Pace Analytical's project experience.

U.S. EPA:

Contract Laboratory Program - Several Pace Analytical laboratories have participated in and met the stringent requirements under the EPA Contract Laboratory Program (CLP). Pace Analytical has provided services for both organic and inorganic routine analytical services contracts, as well as special analytical services for dioxin analyses. The expertise developed in these laboratories has been transferred to other Pace Analytical laboratories to enable CLP capabilities among a greater number of our locations. The Pace Analytical laboratories in Kansas City, Minnesota, and New Orleans have held one or more CLP contracts.

U.S. Army:
Some of the Pace Analytical laboratories have secured validation by the Army Corps of Engineers Missouri River Division (MRD) that has enabled us to support projects directly through the Army Corps as well as through prime contractors. Pace-Minnesota has also worked under the Army Environmental Center (AEC, formerly USATHAMA) program. Pace Analytical has developed expertise in specialty areas, including explosives, which leads to an offering of comprehensive services for Army Corps projects. The following is a brief description of representative projects:

- Pace Analytical is under direct contract with the Army Corps North Pacific Division to provide analytical support for various sites in that division.
- Pace Analytical is under direct contract with the Army Corps South Pacific Division to provide analytical support for various sites in that division.
- Pace Analytical provided analytical support for an Army Corps project at Crab Orchard National Wildlife Refuge which involved water and soil samples collected over a 3-week period. CLP VOA, SVOA, Pesticides & PCBs and inorganic analyses were performed. CLP Level IV data packages and client-specific electronic deliverables were provided.

Air Force:
Pace Analytical has several laboratories that have obtained Air Force Center for Environmental Excellence (AFCEE) approval and provided support to various prime contractors under the Installation Restoration Program (IRP). In addition, the AFCEE approval process is underway at several more Pace Analytical laboratories. Our expertise in the development of IRPIMS and client-specific electronic deliverables has positioned Pace Analytical well in this market. The following is a brief description of representative projects:

- Pace Analytical provided analytical support including fixed laboratory analysis of quarterly groundwater samples using CLP and SW-846 methods. Analyses included VOCs, SVOCs, PCB/Pesticides, Metals, and wet chemistry. Pace Analytical delivered an EPA Level IV data package accompanied with a client-specific (IRPIMS-like) electronic deliverable, with a 28 day turnaround time.
- Pace Analytical has provided support for groundwater and soil projects involving the analyses under methods 8082, 8260, 8270, Mod-8015, and California Title 22 metals in accordance with the IRPIMS 1991 Handbook. Five rounds were completed in 1992-1993; four rounds were completed in 1994.

U.S. Navy:
Pace Analytical laboratories have participated in the Navy CLEAN Program since 1990. Projects have been awarded under Basic Ordering Agreement and ID/IQ contracts with several prime contractors, as well as directly from the Naval Facility Engineering Commands. Pace Analytical has also supported prime contractors in their cleanup efforts via our mobile laboratory capabilities. Project requirements included NEESA Level C and D data packages, quick turnaround time full data packages, and client-specific electronic deliverables. The following is a brief description of representative projects:

- Pace Analytical provided analytical services to a prime contractor in support of the Navy CLEAN Southeastern Division. Projects have included the analysis of soil and water samples for volatiles, semi-volatiles, pesticides and PCBs, and metals under the CLP SOW.

- Pace Analytical is providing analytical services to the Navy CLEAN Western Division through a prime contractor and subcontractors for RI/FS, environmental and ecological assessments, groundwater monitoring, and bioremediation projects under a Basic Ordering Agreement. Project requirements involve the analysis of soil, water, sludge, tissue and sediment samples for volatiles, semi-volatiles, pesticides and PCBs, and metals under the CLP SOW.
- Pace Analytical provided TCLP analysis for sludge samples from the Naval Air Station, New Orleans, LA. Analyses included TCLP volatiles, TCLP semi-volatiles, and RCRA metals under the Land Ban regulations.

Engineering/Consulting Firms:

Pace Analytical has supported hundreds of engineering/consulting firms, some with Master Services Agreements to utilize Pace Analytical nationwide. The scope of work for these projects span a wide range of analytical and deliverables requirements. Successful execution for many of these projects is based primarily on strong technical project management, method compliance and expertise in client-specific electronic deliverables and data packages. The following is a brief description of representative projects:

- Pace Analytical has provided on-going laboratory services to an engineering/consulting firm in support of industrial wastewater, water quality, groundwater monitoring, hazardous waste and remedial investigation programs. Projects were from commercial sites and many Department of Defense sites.
- Pace Analytical has provided analytical support to a community development agency. Pace Analytical is characterizing waste to determine the need for remediation or landfill acceptability. When the project is complete, Pace Analytical will have utilized RCRA method 8080 to determine PCB content in over 300 wipe and solid samples. Pace Analytical provides a standard commercial report on a one-week turnaround.
- Pace Analytical is contracted by an engineering/ consulting firm to provide analytical services for all of their clients' landfill contracts. Projects include quarterly groundwater monitoring, leachate collection and storm water monitoring events. Analytical requirements include Appendix I/II, Subtitle D method protocols for organics, inorganics and metals.

Industrial Firms:

Pace Analytical is well positioned to serve single- and multi-location industrial firms in support of a number of regulatory monitoring programs, site investigations, and remediation projects. The following is a brief description of representative projects:

- Pace Analytical was awarded a national contract agreement by a major petroleum company to provide routine analytical monitoring of its marketing outlets, as well as for analytical and field sampling services for all Louisiana sites, including refining, lube oil, chemical, pipeline, and offshore divisions. Contractual terms are defined at the corporate level, and individual environmental managers in locations throughout the eastern part of the U.S. are linked to specific Pace Analytical laboratory project managers to fulfill their analytical needs. Analyses include routine UST (SW-846) and CLP method protocols.

- Pace Analytical has been under a Master Services Agreement with a major manufacturing firm for several years to provide analytical services for multiple locations in the U.S. Projects include the analyses of soil, water and waste samples for routine EPA/RCRA organics and inorganics involving wet chemistry, GC, GC/MS and HPLC techniques. Pace Analytical also performs air stack sampling and analysis for this client.
- Pace Analytical has a number of national and regional contracts with major landfill operators in the U.S. who are served through multiple Pace Analytical laboratories. Projects include quarterly groundwater monitoring, leachate collection and storm water monitoring events. Analytical requirements include Appendix I/II, Subtitle D method protocols for organics, inorganics, and metals.

Personnel Experience:

The remaining pages of this document include employee information sheets that define years of experience, job experience, and current duties and responsibilities.

Pace Analytical Services
7726 Moller Road
Indianapolis, IN 46268

Employee Information Sheet

Karl Anderson

Job Title: General Manager I

Education: Bachelor of Science 1992; University of Indianapolis, Indianapolis, IN

Major: Chemistry **Minor:** Biology

Employment History:

- **General Manager I**: Pace Analytical Services, Indianapolis, IN; June 2000 to present
- **Laboratory Operations Manager I**: Pace Analytical Services, Indianapolis, IN; March 2000 to June 2000
- **Inorganic Lab Supervisor**: Pace Analytical Services, Indianapolis, IN; May 1998 to March 2000
- **Metals/Inorganic Chemist**: ATC Associates, Indianapolis, IN; April 1997 to May 1998
- **Inorganic Chemist**: ATC Associates, Indianapolis, IN; May 1996 to April 1997
- **Chemist**: Environmental Services Group (ESG), Indianapolis, IN; January 1996 to May 1996
- **Chemist**: Colorado Interstate Gas, Pueblo, CO; October 1994 to January 1996
- **Chemist**: Environmental Services Group (ESG), Indianapolis, IN; October 1990 to September 1994

Current Job Responsibilities:

Karl is responsible for the laboratory operations of the Indianapolis facility of Pace Analytical. His responsibilities include expense management, technical leadership, and development of operating staff. He is also responsible for workload scheduling, budget preparation, staff proficiency, and staff management, including recruiting, retention and motivation.

Pace Analytical Services
7726 Moller Road
Indianapolis, IN 46268

Employee Information Sheet

Tim Harrison

Job Title: Quality Manager I

Education: Bachelor of Science 1988; Rose-Hulman Institute of Technology, Terre Haute, IN

Major: Chemistry **Minor:** Political Science

Employment History:

- **Quality Manager I**: Pace Analytical Services, Indianapolis, IN; December 1998 to present
- **Project Manager**: Pace Analytical Services, Indianapolis, IN; May 1998 to December 1998
- **GC/MS Volatile Analyst**: ATC Associates, Indianapolis, IN; May 1996 to May 1998
- **GC/MS Volatile Analyst**: ATEC Associates, Indianapolis, IN; November 1989 to May 1996
- **GC Volatile and Semi-volatile Analyst**: ATEC Associates, Indianapolis, IN; March 1989 to November 1989
- **Organic Extraction Chemist**: ATEC Associates, Indianapolis, IN; September 1988 to March 1989
- **Quality Control Lab Technician**: Quemetco Inc., Indianapolis, IN; June 1988 to August 1988

Current Job Responsibilities:

Tim is responsible for the independent monitoring and assessment of the overall quality assurance (QA) activities of the Indianapolis facility of Pace Analytical. This includes implementing and monitoring lab QA/QC programs and developing appropriate documentation trails. He is responsible for developing project specific QA plans, maintaining certification activities, and assisting and coordinating with internal and external audits. He also assists in training employees in QA procedures and ethics policies.

Pace Analytical Services
7726 Moller Road
Indianapolis, IN 46268

Employee Information Sheet

Daniel Mark

Job Title: Laboratory Services Manager I (Inorganic Manager)

Education: Bachelor of Science 1986; Indiana University, Bloomington, IN

Major: Chemistry and Geology (double major)

Employment History:

- **Laboratory Services Manager I**: Pace Analytical Services, Indianapolis, IN; January 2000 to present
- **Operations Manager/Senior Analyst**: NET/Testamerica Inc, Indianapolis, IN; 1994 to January 2000
- **Technical Sales Representative**: W.R. Grace, Boca Raton, FL; 1990-1994
- **Captain**: United States Army; 1986 to 1990

Current Job Responsibilities:

Daniel is responsible for providing technical guidance and support to laboratory operations. He performs complex method development activities and evaluates new instrumentation or methodology. He also works independently on complex projects that require advanced analytical skills and has supervisory responsibilities for the inorganic department. Daniel is responsible for chemical analysis involving knowledge in a specialized field (Inorganics and metals) and independent evaluation, selection and adaptation of standard methods and techniques. He performs non-routine analyses of substantial variety and complexity and directs laboratory projects from set-up through data interpretation to reporting results.

Current Methods: ICP 6010; GFAA (7000 and 200 series); Turbidity 180.1; Hexavalent Chromium 7196; Residual Chlorine 330.5; NIOSH methods; Alcohols 8015; Ferrous Iron SM3500; Nitrate 353.2

Pace Analytical Services
7726 Moller Road
Indianapolis, IN 46268

Employee Information Sheet

Steve Sayer

Job Title: Semi-volatile Organic Lab Manager

Education: completing degree at Indiana University/Purdue University of Indianapolis (IUPUI)

Intended Major: Geology

Employment History:

- **Semi-volatile Organic Lab Manager**: Pace Analytical Services, Indianapolis, IN; March 2003 to present
- **Laboratory Analyst III (Semi-volatiles)**: Pace Analytical Services, Indianapolis, IN; May 1998 to March 2003
- **Extraction Analyst**: ATC Environmental, Indianapolis, IN; September 1997 to May 1998
- **Laboratory Technician**: Center for Applied Engineering (division of Jim Walters Research), St. Petersburg, FL; May 1994 to September 1996

Current Job Responsibilities:

Steve is responsible for providing technical guidance and support to laboratory operations. He performs complex method development activities and evaluates new instrumentation or methodology. He also works independently on complex projects that require advanced analytical skills and has supervisory responsibilities for the inorganic department. Steve is responsible for chemical analysis involving knowledge in a specialized field (GC/MS semi-volatiles) and independent evaluation, selection and adaptation of standard methods and techniques. He performs non-routine analyses of substantial variety and complexity and directs laboratory projects from set-up through data interpretation to reporting results.

Current Methods: Semi-volatiles 8270 and SIM 8270

Pace Analytical Services
7726 Moller Road
Indianapolis, IN 46268

Employee Information Sheet

Heath Banter

Job Title: Laboratory Supervisor III (GC and GC/MS Volatiles)

Education: Bachelor of Science 1997; Purdue University, West Lafayette, IN

Major: Biological Studies

Employment History:

- **Laboratory Supervisor III (GC and GC/MS Volatiles):** Pace Analytical Services, Indianapolis, IN; March 2004 to present
- **Laboratory Analyst II (GC/MS Volatiles):** Pace Analytical Services, Indianapolis, IN; March 2003 to March 2004
- **Laboratory Analyst III (metals/mercury):** Pace Analytical Services, Indianapolis, IN; February 2000 to February 2003
- **Dioxin Analyst:** Pace Analytical Services, Indianapolis, IN; September 1998 to February 2000
- **Seasonal Naturalist:** Turkey Run State Park, Marshall, IL; 1997

Current Job Responsibilities:

Heath is responsible for providing technical guidance and support to laboratory operations. He performs complex method development activities and evaluates new instrumentation or methodology. He also works independently on complex projects that require advanced analytical skills and has supervisory responsibilities for the volatile department. Heath is responsible for chemical analysis involving knowledge in a specialized field (GC and GC/MS volatiles) and independent evaluation, selection and adaptation of standard methods and techniques. He performs non-routine analyses of substantial variety and complexity and directs laboratory projects from set-up through data interpretation to reporting results.

Current methods: Volatiles 8260, 8021, 624 and 524; GRO 8015

Pace Analytical Services
7726 Moller Road
Indianapolis, IN 46268

Employee Information Sheet

Donna Spyker

Job Title: Client Services Manager II

Education: Bachelor of Science 1983; State University of New York, Stony Brook, NY

Major: Biology

Employment History:

- **Client Services Manager II:** Pace Analytical Services, Indianapolis, IN; July 2000 to present
- **Project Manager III:** Pace Analytical Services, Indianapolis, IN; January 1999 to July 2000
- **GC Lab Supervisor:** Pace Analytical Services, Indianapolis, IN; May 1998 to January 1999
- **GC Group Leader:** ATC Associates, Indianapolis, IN; May 1996 to May 1998
- **GC Group Leader:** ATEC Associates, Indianapolis, IN; September 1989 to May 1996
- **GC Team Leader:** NYTEST Environmental Inc, Port Washington, NY; August 1987 to August 1989
- **GC Analyst:** NYTEST Environmental Inc, Port Washington, NY; February 1985 to August 1987 and July 1983 to May 1984
- **Biology/Chemistry Tutor:** Suffolk County Community College, NY; 1979 to 1980

Current Job Responsibilities:

Donna provides leadership and guidance to project management and client services staff. She is responsible for overall implementation of client services and project management activities and prepares reports and manages large-scale complex projects. She serves as the interface between clients and laboratory management to achieve client satisfaction with delivery of analytical results within budget, on schedule and to the requested level of quality.

Pace Analytical Services
7726 Moller Road
Indianapolis, IN 46268

Employee Information Sheet

Tina Brasher

Job Title: Quality Analyst/ Safety Officer

Education: Bachelor of Science 1999; Ball State University, Muncie, IN

Major: Secondary Education (Primary: Chemistry; Supporting: Physical Science)

Employment History:

- **Quality Analyst/ Safety Officer:** Pace Analytical Services, Indianapolis, IN; January 2007 to present
- **Laboratory Analyst II:** Pace Analytical Services, Indianapolis, IN; February 2002 to January 2007
- **Analytical Chemist:** Reilly Industries, Indianapolis, IN; January 2001 to February 2002
- **Chemistry/Physics Teacher:** Cardinal Ritter High School, Indianapolis, IN; August 1999 to December 2000

Current Job Responsibilities:

Tina is responsible for assisting the Quality Manager with tasks associated with level data package deliverables, quality project and lab reviews, documentation revision, data archiving, and corrective action completion. In addition she is the laboratory's Safety Manager. In this role, she is responsible for maintaining the Chemical Hygiene plan and safety SOPs as well as the training of staff in safety protocols.

Pace Analytical Services
7726 Moller Road
Indianapolis, IN 46268

Employee Information Sheet

Aimee Allison

Job Title: Laboratory Analyst I (GC and GC/MS Volatiles)

Education: Associate of Applied Science 2002; ITT Technical Institute, Indianapolis, IN

Major: Chemical Technology

Employment History:

- **Laboratory Analyst I**: Pace Analytical Services, Indianapolis, IN: November 2003 to present
- **Laboratory Technician III**: Pace Analytical Services, Indianapolis, IN; September 2002 to November 2003
- **Lab Analyst**: Kelly Scientific- assignment: Micronutrients, Indianapolis, IN; April 2002 to September 2002

Current Job Responsibilities:

Aimee is responsible for chemical analysis involving knowledge in a specialized field (GC and GC/MS volatiles) and independent evaluation, selection and adaptation of standard methods and techniques. She performs non-routine analyses of substantial variety and complexity and directs laboratory projects from set-up through data interpretation to reporting results.

Current methods: Volatiles 8260, 8021 and 624

Pace Analytical Services
7726 Moller Road
Indianapolis, IN 46268

Employee Information Sheet

Regina Bedel

Job Title: Laboratory Analyst I (GC Semi-volatiles)

Education: Bachelor of Science 1999; Purdue Univ., West Lafayette, IN

Major: Biology **Minor:** Psychology

Employment History:

- **Laboratory Analyst I:** Pace Analytical Services, Indianapolis, IN; May 2005 to present
- **Electroneurodiagnostic Technician**: University Ear, Nose and Throat Specialists, Cincinnati, OH; October 2003 to April 2005
- **Laboratory Analyst**: Pace Analytical Services, Indianapolis, IN; May 2003 to October 2003
- **Laboratory Technician (extractions)**: Pace Analytical Services, Indianapolis, IN; February 2002 to May 2003
- **Toxicology Lab Technician**: Purdue University Animal Disease Diagnostic Laboratory, West Lafayette, IN; June 1999 to February 2002

Current Job Responsibilities:

Regina is responsible for chemical analysis involving knowledge in a specialized field (GC Semi-volatiles) and independent evaluation, selection and adaptation of standard methods and techniques. She performs non-routine analyses of substantial variety and complexity and directs laboratory projects from set-up through data interpretation to reporting results.

Current Methods: Pesticides 8081 and PCBs 8082

Pace Analytical Services
7726 Moller Road
Indianapolis, IN 46268

Employee Information Sheet

Lorraine Dougan

Job Title: Laboratory Analyst III (Wet chemistry and Metals)

Education: Bachelor of Science 1985; Ball State University, Muncie, IN

Major: Biology and Psychology **AS:** Chemical Technology

Employment History:

- **Laboratory Analyst III**: Pace Analytical Services, Indianapolis, IN; May 2001 to present
- **Technical Data Coordinator/Safety Officer:** TestAmerica Inc., Indianapolis, IN; September 1994 to March 2001
- **Wet Chemistry Analyst/Field Technician:** Water Pollution Control, Anderson, IN; March 1991 to March 1995
- **Chemist:** Sieco, Inc., Columbus, IN; July 1989 to February 1991
- **Laboratory Technician:** Elwood Wastewater Treatment Plant, Elwood, IN; July 1985 to June 1989

Current Job Responsibilities:

Lori is responsible for the preparation and analysis of a wide variety of analytes from different matrices using common instrumentation and standardized methods. She coordinates and executes detailed sample preparations and thoroughly documents procedures.

Current Methods: GFAA (7000 and 200 series); Alcohols 8015; Volatiles in air; Alkalinity 310.1; Acidity 305.1; pH (150.1 and 9045); Hardness 130.2; Sulfate 375.4; Hexavalent Chromium 7196; Ferrous Iron SM3500; COD 410.4; TSP; Turbidity 180.1

Pace Analytical Services
7726 Moller Road
Indianapolis, IN 46268

Employee Information Sheet

Jodie Fislar

Job Title: Laboratory Analyst I (GC and GC/MS Volatiles)

Education: Bachelor of Science 2002; University of Indianapolis, Indianapolis, IN

Major: Environmental Science and Earth/Space Science

Employment History:

- **Laboratory Analyst I (GC and GC/MS Volatiles):** Pace Analytical Services, Indianapolis, IN; April 2003 to present
- **Laboratory Technician III (organic extractions):** Pace Analytical Services, Indianapolis, IN; May 2002 to April 2003

Current Job Responsibilities:

Jodie is responsible for chemical analysis involving knowledge in a specialized field (GC and GC/MS volatiles) and independent evaluation, selection and adaptation of standard methods and techniques. She performs non-routine analyses of substantial variety and complexity and directs laboratory projects from set-up through data interpretation to reporting results.

Current Methods: Volatiles 8260 and 8021; GRO 8015

Pace Analytical Services
7726 Moller Road
Indianapolis, IN 46268

Employee Information Sheet

Stephanie Lack

Job Title: Laboratory Analyst I (GC Semi-volatiles)

Education: Bachelor of Science 2003; Indiana University/ Purdue University at Indianapolis (IUPUI), Indianapolis, IN

Major: Psychology

Employment History:

- **Laboratory Analyst I:** Pace Analytical Services, Indianapolis, IN; December 2004 to present
- **Laboratory Technician**: Eli Lilly and Co., Indianapolis, IN; July 2004 to December 2004
- **Laboratory Technician**: Pace Analytical Services, Indianapolis, IN; April 2004 to July 2004
- **Laboratory Technician**: Dow AgroSciences, Indianapolis, IN; April 2001 to August 2003

Current Job Responsibilities:

Stephanie is responsible for chemical analysis involving knowledge in a specialized field (GC Semi-volatiles) and independent evaluation, selection and adaptation of standard methods and techniques. She performs non-routine analyses of substantial variety and complexity and directs laboratory projects from set-up through data interpretation to reporting results.

Current Methods: DRO 8015 (including ERO and Ohio); Tennessee EPH

Pace Analytical Services
7726 Moller Road
Indianapolis, IN 46268

Employee Information Sheet

Laura Banter

Job Title: Laboratory Analyst I (Inorganic Wet Chemistry)

Education: Bachelor of Arts 1997; Purdue University, West Lafayette, IN

Major: Psychology

Employment History:

- **Laboratory Analyst I**: Pace Analytical Services, Indianapolis, IN; June 2004 to present
- **Mental Health Clinician**: Community Hospital North (In-patient Psychiatry), Indianapolis, IN; March 1999 to January 2004

Current Job Responsibilities:

Laura is responsible for the preparation and analysis of a wide variety of analytes from different matrices using common instrumentation and standardized methods. She coordinates and executes detailed sample preparations and thoroughly documents procedures.

Current Methods: TCLP Preparation 1311; Ferrous Iron SM3500; Sulfate 375.4; Sulfide 376.2; Hexavalent Chromium 7196; Fluoride 340.2; Residue (160.1, 160.2 and 160.3); pH (150.1 and 9045); Percent Moisture (ASTM D 2974-87)

Pace Analytical Services
7726 Moller Road
Indianapolis, IN 46268

Employee Information Sheet

Cheryl Starkey

Job Title: Laboratory Analyst II (Inorganic wet chemistry)

Education: Bachelor of Arts 1984; Indiana University/Purdue University of Indianapolis, Indianapolis, IN

Major: Geology (also has Hazardous Materials Management certificate)

Employment History:

- **Laboratory Analyst II**: Pace Analytical Services, Indianapolis, IN; June 1999 to present
- **Elementary Teacher**: Joy Tabernacle Christian Academy, Indianapolis, IN; August 1997 to June 1999
- **Lab Technician**: TestAmerica, Inc., Indianapolis, IN; June 1994 to July 1998

Current Job Responsibilities:

Cheryl is responsible for chemical analysis involving knowledge in a specialized field (Lachat analyses) and independent evaluation, selection and adaptation of standard methods and techniques. She performs non-routine analyses of substantial variety and complexity and directs laboratory projects from set-up through data interpretation to reporting results.

Current Methods: Nitrate 353.2; Cyanide (335.4 and 9012); Total Kjeldahl Nitrogen 351.2; Phenolics 420.2; Chloride 325.2; Ammonia 350.1; Phosphorus 365.2; Ferrous Iron SM3500; COD 410.4

Pace Analytical Services
7726 Moller Road
Indianapolis, IN 46268

Employee Information Sheet

Katie Sullivan

Job Title: Laboratory Analyst II (GC/MS Semi-volatiles)

Education: Bachelor of Science 1996; Tri-State University, Angola, IL

Major: Environmental Science **Minor:** Chemistry

Employment History:

- **Laboratory Analyst II**: Pace Analytical Services, Indianapolis, IN; May 1999 to present
- **Construction Field Technician**: Patriot Engineering, Indianapolis, IN; October 1998 to May 1999
- **Laboratory Technician**: Lab Support Temporaries, Indianapolis, IN; February 1997 to July 1998
- **Summer student worker**: Eli Lilly and Co., Indianapolis, IN; May 1994 to August 1994

Current Job Responsibilities:

Katie is responsible for chemical analysis involving knowledge in a specialized field (GC/MS semi-volatiles) and independent evaluation, selection and adaptation of standard methods and techniques. She performs non-routine analyses of substantial variety and complexity.

Current Methods: Semi-volatiles 8270

Pace Analytical Services
7726 Moller Road
Indianapolis, IN 46268

Employee Information Sheet

Darrin Tester

Job Title: Laboratory Analyst II (GC/MS Semi-volatiles)

Education: Bachelor of Science 2001; Butler University; Indianapolis, IN

Major: Biological Sciences

Employment History:

- **Laboratory Analyst I**: Pace Analytical Services, Indianapolis, IN; September 2002 to present
- **Laboratory Analyst**: American Analytical Laboratory, Inc., Indianapolis, IN; December 2000 to August 2002 (DRO, wet chem., organic prep, Lachat operator)

Current Job Responsibilities:

Darrin is responsible for chemical analysis involving knowledge in a specialized field (GC/MS semi-volatiles) and independent evaluation, selection and adaptation of standard methods and techniques. He performs non-routine analyses of substantial variety and complexity and directs laboratory projects from set-up through data interpretation to reporting results. He is able to select, modify, and adapt equipment to specific project needs.

Current Methods: Semi-volatiles SIM 8270

Pace Analytical Services
7726 Moller Road
Indianapolis, IN 46268

Employee Information Sheet

Felicia Walker

Job Title: Laboratory Analyst II (Metals analyses; Inorganics)

Education: Bachelor of Arts 2000; DePauw University, Greencastle, IN

Major: Biology

Employment History:

- **Laboratory Analyst II**: Pace Analytical Services, Indianapolis, IN; August 2000 to present
- **Laboratory Assistant**: DePauw University Biology Department, Greencastle, IN; January 1997 to May 2000
- **Research Intern**: Eli Lilly, Indianapolis, IN; June 1998 to August 1998

Current Job Responsibilities:

Felicia is responsible for chemical analysis involving knowledge in a specialized field (ICP Metals; Mercury analysis) and independent evaluation, selection and adaptation of standard methods and techniques. She performs non-routine analyses of substantial variety and complexity and directs laboratory projects from set-up through data interpretation to reporting results. She is able to select, modify, and adapt equipment to specific project needs.

Current Methods: ICP 6010; Mercury (7470 and 7471)

Pace Analytical Services
7726 Moller Road
Indianapolis, IN 46268

Employee Information Sheet

India Perry

Job Title: Laboratory Technician III (Organic Extractions)

Education:

Major:

Employment History:

- **Laboratory Technician III**: Pace Analytical Services, Indianapolis, IN: February 2005 to present

Current Job Responsibilities:

India is responsible for sample preparation involving knowledge in a specialized field (Organic Extractions) and independent evaluation, selection and adaptation of standard methods and techniques. She performs routine and non-routine preparation of substantial variety and complexity and provides sample extracts for further analytical testing.

Current methods: Ultrasonic Extraction 3550 and Separatory Funnel Extraction 3510

Pace Analytical Services
7726 Moller Road
Indianapolis, IN 46268

Employee Information Sheet

Marcia Calbert

Job Title: Laboratory Technician III (Organic Extractions)

Education:

Major:

Employment History:

- **Laboratory Technician III**: Pace Analytical Services, Indianapolis, IN: March 2004 to present

Current Job Responsibilities:

Marcia is responsible for sample preparation involving knowledge in a specialized field (Organic Extractions) and independent evaluation, selection and adaptation of standard methods and techniques. She performs routine and non-routine preparation of substantial variety and complexity and provides sample extracts for further analytical testing.

Current methods: Ultrasonic Extraction 3550 and Separatory Funnel Extraction 3510

RLTurner

SUBMITTAL COVER SHEET

Building Integrity Since 1976
General Contracting • Design-Build • Construction Management
1000 West Oak Street, Zionsville, Indiana 46077, 317.873.2712
www.rlturner.com

CONTRACT NUMBER/NAME: **Fuel Storage Facility F-05** DATE: November 19, 2007
CONTRACTOR PROJECT NUMBER: **07-25**

SUBCONTRACTOR / SUPPLIER	MFR / SPEC SECT / NO & TITLE	SUBMITTAL ITEMS
SUBCONTRACTOR: HIS Constructors, LLC 5150 E. 65th Street, Suite B Indianapolis, IN 46220-4817	**MANUFACTURER:** **Spec Section / Description** **Section 02510-1.04, D** **Section 02510-3.11, B-1** **[ ] First Submission** [x] Resubmittal	**1) Water Coordination drawing**
ARCHITECT	**CONSTRUCTION MANAGER**	**CONTRACTOR**
Gary Austerman Burns & McDonnell 9400 Ward Parkway Kansas City, MO 64114 Home: (816) 240-2606 Fax: (816) 822-3519	Jere Cox Turner / Trotter 2349 Aviation Drive Indianapolis, IN 46241 Tel: (317) 487-4148 Fax: (317) 487-4131	Dave Salamone, Project Manager **RL Turner Corporation** 1000 West Oak Street Zionsville, IN 46077 Ph: 317-873-2712 Fx: 317-873-1262 RLTC Project No.: 07-25
ARCHITECT STAMP:	**CONSTRUCTION MGR STAMP:**	**CONTRACTOR'S STAMP:**
[ ] See attached Shop Drawing Review Comment sheet. Log No. _____ [ ] Approved [ ] Approved as Noted [ ] Not Approved, Revise and Resubmit [ ] Action Not Required **Burns & McDonnell** By: _____ Date: _____	[ ] See attached Shop Drawing Review Comment sheet. Log No. _____ [ ] Forward to Architect/Engineer [ ] Revise and Resubmit _____ _____ _____ _____ **Turner / Trotter** By: _____ Date: _____	[ ] This product is a deviation from the Specifications; refer to attached letter describing Differences. THIS DRAWING EXCEPT AS NOTED BY THE GENERAL CONTRACTOR HAS BEEN CHECKED BY THEM AND IS APPROVED FOR GENERAL CONFORMITY WITH THE PLANS. THIS APPROVAL IS SUBJECT TO THE TERMS OF THE CONTRACT, AND TO THE DRAWINGS AND SPECIFICATIONS, WHICH ARE PART THEREOF AND DOES NOT AUTHORIZE ANY CHANGE THEREFROM. THE CONTRACTORS ARE TO BE RESPONSIBLE FOR VERIFYING ALL DIMENSIONS AND QUANTITIES AND FOR THE COORDINATION OF ALL THE WORK NO SUCH RESPONSIBILITY IS ASSUMED BY THE GENERAL CONTRACTOR IN CHECKING THIS DRAWING. **RL Turner Corporation** By: Dave Salamone Date: _____

PSI's Laboratory Testing Services

Indianapolis, Indiana

Quality laboratory testing is a vital component of PSI services. We invest a considerable amount of time, money and resources in maintaining our laboratory to the highest industry standards. Clients rely on us to provide quality, consistent, unbiased results... *every time.*

The Indianapolis laboratory is fully accredited by AASHTO and participates in sample proficiency programs by the Cement and Concrete Research Laboratories (CCRL) and the AASHTO Materials Reference Laboratory (AMRL). Our facility is also approved by the U.S. Army Corps of Engineers and the Indiana Department of Transportation (INDOT).

Our modern laboratory provides analysis for the full range of construction materials and complies with the following standards:

ASTM E329	**Specification for Agencies Engaged in the Testing and/or Inspection of Materials Used in Construction**
C 1077	**Laboratories Testing Concrete and Concrete Aggregates for Use in Construction and Criteria for Laboratory Evaluation**
D3666	**Practice for Evaluating and Qualifying Agencies Testing and Inspecting Bituminous Paving Materials**
D3740	**Minimum Requirements for Agencies Engaged in the Testing and/or Inspection of Soil and Rock as Used in Engineering Design and Construction**

One Company, One Call.

psi Information To Build On

psi Information To Build On
Engineering • Consulting • Testing

A sample of our services include:

Concrete

- Compression Testing of Concrete Cylinder Specimen
- Flexural Strength Testing of Concrete Beams
- Concrete Mix Designs
- Compression Strength Testing of Core Samples
- Slump, Air Content, Unit Weight, and Temperature of Fresh Concrete

Aggregates

- Unit Weight and Voids
- Organic Impurities
- Soundness of Aggregate
- Sieve Analysis
- Specific Gravity
- LA Abrasion
- Lightweight Particles in Aggregates
- Clay Lumps and Friable Particles in Aggregates

Asphalt

- Marshall Stability and Flow
- Maximum Theoretical Specific Gravity
- Extraction of Bitumen from Asphalt Concrete
- Sieve Analysis of Extracted Aggregates
- Air Void Determination of Bituminous Mixtures

www.psiusa.com

Soils

- Soil Classification
- Grain Size Analysis
- Atterburg Limits
- Specific Gravity
- Standard and Modified Proctors
- Moisture Content
- California Bearing Ratio (CBR)
- Unconfined Compressive Strength of Cohesive Soil
- Consolidation Testing
- Permeability Testing
- Relative Density

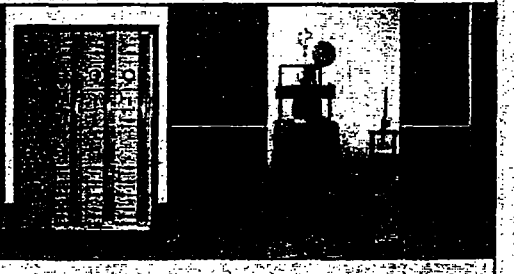

Masonry

- Compressive Strength Testing of Mortar/Grout Cubes/Prisms
- Absorption, Compressive Strength, Flexural Strength and Dimensional Analysis of Brick and CMU

Metals

- Welding Procedure/Performance Qualification (plate or pipe)
- Bolt Tension Testing
- Ultrasonic Testing
- Magnetic Particle Testing
- Liquid Penetration Testing
- Dimension Inspection
- Visual Weld Inspection

To learn more about the services listed above or for assistance, please contact Kevin Kessler at (317)876-7723 ext. 115 or kevin.kessler@psiusa.com

Login

AASHTO Materials Reference Laboratory

Home | AASHTO Accreditation | Laboratory Assessment | Proficiency Testing

AASHTO Accreditation Details*

Professional Service Industries, Inc.

Indianapolis, Indiana
Show This Entry Only
Kevin J. Kessler
5362 West 78th Street
Indianapolis, Indiana 46268

Phone: (317) 876-7723
Fax: (317) 876-8155
kevin.kessler@psiusa.com
http://www.psiusa.com

Hot Mix Asphalt - 8/15/1999
T30 T166 T209 T245 T269 - D1559 D2041 D2726 D3203 D3666 D5444

Aggregate - 4/24/2003
C40 C117 C127 C128 C136 C566 C702 C1077 E329

Soil - 5/15/2000
T87 T88 T89 T90 T99 T100 T146 T176 T180 T193 T208 T216 T265 T296 T297 T310 - D421 D422 D698 D854 D1140 D1557 D1883 D2166 D2216 D2217 D2419 D2435 D2487 D2488 D2850 D2922 D3017 D3740 D4318 D4767 D5084

Portland Cement Concrete - 4/24/2003
C31 (Cylinders) C39 C138 C143 C172 C173 C231 C617 C1064 C1077 C1231 E329

*This information is only valid as of 9/15/2004. Please visit http://www.amrl.net for current accreditation status.

Notice

Printouts may be outdated
Paper copies of this page may be outdated and/or altered. Current accreditation information (test methods, suspensions, and contact details) can only be found on the AMRL website. These changes aim to increase the accuracy of the accreditation status for each participating laboratory.

Please Note
The dates displayed beside the field of accreditation correspond to the year of initial accreditation in that field.

psi Information To Build On
Engineering • Consulting • Testing

Résumé

Leonard Bareford

District Manager, Indianapolis, Indiana

Year started with PSI: **2003**
Years experience with other firms: **17**

Education

Bachelor of Science in Construction Technology, Indiana State University, 1988

Certifications/Registrations/Technical Training

ACI Certified Concrete Inspector, Indiana, 1985
Certified Nuclear Density Gauge Operator, Indiana, 1985
EPA AHERA Asbestos Inspector, Indiana, *1990*
EPA AHERA Asbestos Management Planner, Indiana, 1990
Troxler Certified Nuclear/Density Gauge Operator, Indiana, 1985

Representative Construction Inspection and Testing Project Experience

- Chrysler IR 2000 – Project manager for new Foundry Line in Indianapolis, IN
- General Motors Facilities – Project manager for several projects at General Motors Facilities in Ft. Wayne, Marion, Indianapolis, and Bedford, Indiana. This experience includes small additions/renovations up to and including the original construction of the Ft. Wayne Assembly Plant.
- IP&L Generating Station; Petersburg, Indiana – Project manager for this three-year project that included adding two scrubber units, a 780-foot exhaust stack, and additional facility buildings.
- Indianapolis Motor Speedway and Bovis; Indiana – Project manager for Formula 1 improvements to the Indianapolis Motor Speedway.
- Cummins Engine Company; Columbus, Indiana – Project manager responsible for the reconstruction of diesel engine manufacturing facilities, including the use of an onsite laboratory.
- Opus North Corporation, Airwest Business Park; Plainfield, Indiana – Project manager for construction inspection and testing services for seven buildings in an industrial park, approximately five million square foot.

Representative Pavement and Subgrade Evaluation Experience

- Various Projects throughout Indiana, Ohio and Kentucky – Project Manager/Field Engineer responsible for the development and implementation of pavement investigation programs for private and public agencies. These programs included existing data review, site reconnaissance, documentation of existing conditions, site drainage characteristics, rigid and flexible pavement sampling for laboratory testing and analysis, pavement profile descriptions, subgrade condition assessment, and design/specification review. Data was collected, analyzed, and presented to clients along with recommendations for pavement repair based on intended use and anticipated life cycle. Pavement and/or subgrade improvements often have included the utilization of additional drainage, chemical stabilization, mechanical stabilization (grids and geotextiles), and stone application

Representative Nondestructive Examination and Testing Project Experience

- Indianapolis; Indiana – Project manager responsible for the construction of the Indianapolis Motor Speedway Pagoda project.

Representative Roof Evaluation and Consulting Project Experience

- Indiana State University; Terre Haute, Indiana – Project manager responsible for roof study and moisture survey for library on campus.

psi Information To Build On
Engineering • Consulting • Testing

Résumé

Kevin J. Kessler, CET
Department Manager, Construction Services, Indianapolis, Indiana

Education
BS, Civil Engineering Technology, Western Kentucky University, 1983

Years Experience in Construction Materials Testing: 24

Certifications/Registrations
- Engineering Technician CMT (NICET), Level III, #84675
- Certified Engineering Technologist, (NICET) #873
- Certified Concrete Technician (ACI/KRMCA), #0261
- Certified Welding Inspector (CWI/AWS/QC1), #94010421, 1988
- Radiation Safety Officer/Instructor for Nuclear Density Gauges
- Special Inspector, Reinforced Concrete (ICBO), #44918
- Special Inspector, Structural Masonry (ICBO), #55396

Affiliations/Memberships
Indiana Construction Roundtable (ICR)

Professional Experience
Mr. Kessler has over 21 years experience in quality assurance of construction materials and methods. He is familiar with national, state and local codes and standards pertaining to construction monitoring and material testing of concrete, soils, aggregates, asphalt, masonry, steel, bolting and welding. He has supervised and managed quality assurance services on thousands of construction projects ranging from small commercial improvements to complex, multi-million dollar heavy public works construction involving mass grading, deep foundations, reinforced concrete, pre/post-tensioned concrete, structural masonry, steel/welding/bolting, spray-applied fireproofing, asphaltic concrete, pavements, plant inspections, and underground utilities. His duties involve technical oversight, department staffing / training, business development, and financial performance. He also serves as the technical manager for the laboratory's Quality Assurance Program.

Significant Project Experience
The following is a partial list of projects that Mr. Kessler has served as the Sr. Project Manager for PSI services. Each of these projects spanned several years and many required on-site testing facilities. As the Sr. Project Manager, Mr. Kessler was responsible for the overall quality and delivery of PSI services including both technical and administrative items.
- Clarian's North Medical Campus, Carmel, Indiana (2003 – 2005).
- FAA Control Tower and Base Building, Indianapolis, Indiana (2003-2004)
- DaimlerChrysler's New Transmission Plant W5A580, Kokomo, IN. (2000 – 2003)
- New Indiana State Museum, Indianapolis, Indiana (2000-2002)
- New Avon High School (1997-1999)
- Chrysler's New Transmission Plant 545RFE, Kokomo, IN. (1996 – 1999)

Information To Build On
Engineering • Consulting • Testing

Résumé

R. Alexander Stanley
Project Engineer, Construction Services, Indianapolis, Indiana

Education
BS in Construction Technology/Structural Design, Purdue University, Indiana, 1998
AS in Architectural Technology, Purdue University, Indiana, 1996

Years Experience in Construction Materials Testing: 10

Certifications/Registrations/Technical Training
- Certified Nuclear Gauge Operator, 2003
- ACI Concrete Field Testing Technician - Grade I, 1996
- INDOT QA/QC Bituminous Technician, 1998
- NICET Level I, Soils, Concrete, 1998
- Third Party EIFS Inspector, 2001
- Confined Space Entry – Qualified Person, 2001
- Certified PSI Project Manager, 2002
- OSHA 10-hr Construction Industry Safety, 2002
- INDOT QA/QC Superstructures – Concrete Technician, 2003

Affiliations/Memberships
American Concrete Institute (ACI)
Associated General Contractors (AGC)

Professional Experience
Mr. Stanley has over 10 years experience in quality assurance of construction materials and methods. He is familiar with national, state and local codes and standards pertaining to construction monitoring and material testing of concrete, soils, aggregates, asphalt, masonry, steel, bolting and welding. He has supervised and managed quality assurance services on hundreds of construction projects ranging from small commercial improvements to complex, multi-million dollar heavy public works construction involving mass grading, deep foundations, reinforced concrete, pre/post-tensioned concrete, structural masonry, steel/welding/bolting, spray-applied fireproofing, asphalt pavements, plant inspections, and underground utilities. His duties involve daily scheduling of services, supervision and training of technicians, equipment calibrations, project management, client maintenance, and proposal preparation.

SIGNIFICANT PROJECT EXPERIENCE
The following is a partial list of projects that Mr. Stanley has served as the Project Manager for PSI services. As the Project Manager, Mr. Stanley was responsible for the overall quality and delivery of PSI services including both technical and administrative items.
1. Mississinewa Dam - Cut-Off Wall, Peru, Indiana, 2002 to 2005.
2. Trader's Point and Trader's Point II Development, Indianapolis, Indiana, 2003 to 2005.
3. Columbus Municipal Airport, Columbus, Indiana, 2002 to 2006.
4. Blue Sky Casino Projects, French Lick, Indiana, 2006

ATTACHMENT B
AUGMENTED SVE TRENCH EXCAVATION FORM

DAILY QUALITY CONTROL REPORT
AUGMENTED SVE TRENCH INSTALLATION
ENVIRO-CHEM SUPERFUND SITE
ZIONSVILLE, IND

SLURRY EXCAVATION

DAILY QC RESULTS

SLURRY: BIO-POLYMER

DATE: _____ SHIFT NO. _____

INSPECTOR: Geo-Solutions

BUCKET WIDTH: _____

SLURRY LEVEL ok / monitor

TRENCH VERTICALITY ok / monitor

MEASURE EXCAVATION PRIOR TO BACKFILLING (Every 10 lf)

DATE	STATION NO.	SURFACE ELEVATION (ft)	TRENCH DEPTH (ft)	BOTTOM ELEVATION (ft)	PANEL LENGTH (ft)	PANEL AREA EXCAVATED (sf)	COMMENTS

Geo-Solutions

						SQ FT TODAY	
						SQ FT TODATE	

COMMENTS: _____

SIGNED: _____
Contractor's QC Oversite

SIGNED: _____
Owner's Representative

ATTACHMENT C
POLYMER SLURRY QC FORM

Geo-Solutions

DAILY QUALITY CONTROL REPORT POLYMER SLURRY

AUGMENTED SVE TRENCH INSTALLATION
ENVIRO-CHEM SUPERFUND SITE
ZIONSVILLE, IND

DAILY QC RESULTS SPECIFICATION: BP Slurry Trench

DATE: _____ SHIFT NO. _____ INSPECTOR: _____
Geo-Solutions

FRESH POLYMER SLURRY

Time	Viscosity (>50 sec) (2 per shift)	pH (>9) (2 per shift)	Comments

TRENCH POLYMER SLURRY

Time	Station	Viscosity (>40 sec) (2 per shift)	pH (>8) (2 per shift)	Comments

COMMENTS:

_____
_____
_____
_____
_____

SIGNED: _____ SIGNED: _____
Contractor's QC Oversite

_____
Contractors Construction Manager

ATTACHMENT D
AUGMENTED SVE TRENCH SLOPE BACKFILL FORM

AUGMENTED SVE TRENCH INSTALLATION
ENVIRO-CHEM SUPERFUND SITE
ZIONSVILLE, IND

BACKFILL SLOPE

DAILY QC RESULTS

INSPECTOR: _____
Geo-Solutions

DATE: _____

BACKFILL SLOPE MEASUREMENTS (EVERY 10 FEET)

AM		PM	
STATION NO.	DEPTH	STATION NO.	DEPTH

SIGNED: _____

Contractor's Representative

FIGURE 1
SSQMP ORGANIZATIONAL CHART

Enviro-Chem Attachment Z-1 Remedy

S.Q.C Organization Chart

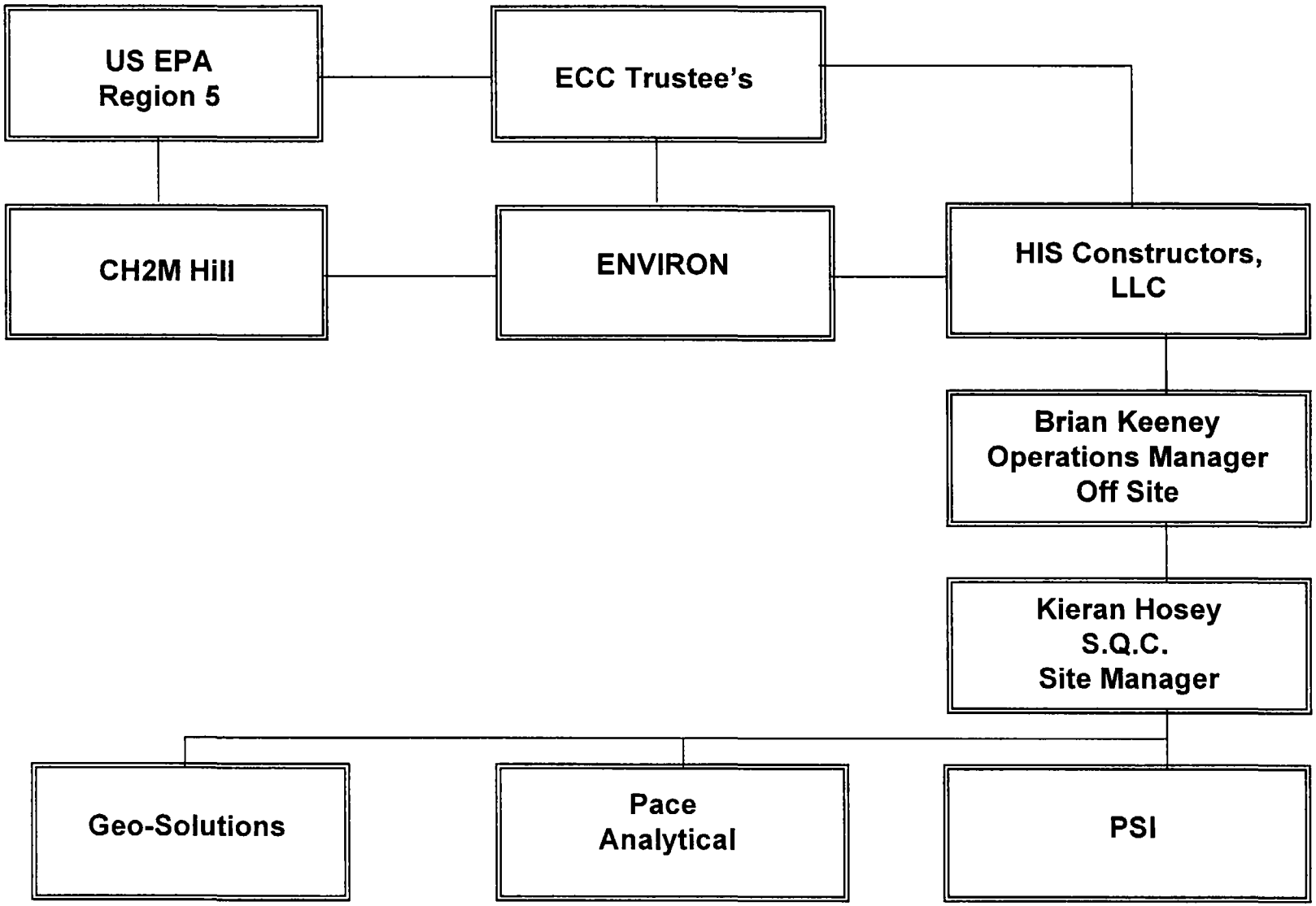

Grain-Size Certification for Free-Draining Trench Backfill Gravel

TRANSMITTAL OF CONTRACTOR'S SUBMITTAL
(ATTACH TO EACH SUBMITTAL)

DATE: NOVEMBER 29, 2007

TO: N.W. Bernstein & Associates, LLC
800 Westchester Ave., Suite N319, Rye Brook, NY 10573
Attn: Mr. Norman W. Bernstein (Trustee)
P: (914) 358-3500; F: (914) 701-0707
E-Mail: nwbernstein@nwbllc.com

TO: ENVIRON International Corp.
740 Waukegan Rd., Suite 401, Deerfield, IL 60015
Attn: Mr. Ron Hutchens, P.E.
P: (847) 444-9200 Ext. 211; F: (847) 444-9240
E-Mail: rhutchens@environcorp.com

FROM: HIS Constructors, LLC
Contractor
5150 East 65th Street, Suite B, Indianapolis, IN 46220
Attn: Mr. Brian Keeney
E-Mail: Brian.Keeney@hisconstructors.com
P: (317) 541-9290; F: (317) 541-9436

ENVIRON Submittal No.:

HIS Internal Submittal No.: 070047-11

☒ New Submittal ☐ Resubmittal

Enviro-Chem Superfund Site Attachment Z-1 Remedy

HIS Project No.: 070047

Specification Section No.: Section 02200 Excavation, Backfill, and Compaction; Section 02210 Augmented SVE Trench Construction; Section 02206 Permeable Reactive Gate Treatment System
(Cover only one section with each transmittal)

Schedule Date of Submittal:
November 29, 2007

SUBMITTAL TYPE: ☐ Shop Drawing ☒ Sample ☒ Informational

The following items are hereby submitted:

Number of Copies	Description of Item Submitted (Type, Size, Model Number, Etc.)	Spec. and Para. No.	Drawing or Brochure Number	Contains Variation to Contract	
				No	Yes
1	Coarse #8 Commercial Stone (Subbase Stone)	02200 1.03A; 1.03B 1; 2.01A		X	
1	Pea Gravel	02200 1.03A; 1.03B 1; 2.01B		X	
1	#23/24 Sand (B-Borrow)	02206 1.03A; 1.04C 1;	C-10 & C-12	X	
1	#53 Commercial Stone (Driveway Stone)	02200 1.03A; 1.03B 1; 2.01C		X	
1	Course L Aggregate (Free Draining Gravel)	02200 1.03A; 1.03B 1; 2.01E / 02210 1.03B		X	

CONTRACTOR hereby certifies that it has complied with the requirements of Subcontract Documents in preparation, review, and submission of designated Submittal and (ii) the Submittal is complete and in accordance with the Subcontract Documents and requirements of laws and regulations and governing agencies.

By: Brian Keeney
CONTRACTOR (Authorized Signature)

REV 02/02 FORM 295

Martin Marietta Materials

Quality Test Report

Plant 25109-Noblesville Stone
Product 0637-#8 com
Specification

Sample Information

Sample No 1905246662
Date Sampled 09/20/07 14:45
Date Completed 09/24/07 06:00
Sampled By Allen Harrison
Tested By Allen Harrison
Type Quality Monitoring
Method Load-out Face
Location
Process
Ledge 9-14
Other

Weather
Temp
Split Sample ☐
Resample ☐
Borehole
Depth Top/Bottom

Sequence Code

Test Note

Gradation Results

Unit	Moist Mass	Dry Mass	Wash Mass	Moisture %	Wash Loss %
g	6549.70	6276.60	6255.20	4.4	0.3

Sieve	Mass Retained	Cum Mass Retained	Ind % Retained	% Retained	% Passing	Target	Specification	Comment
1" (25 mm)	0.0	0.0	0.0	0.0	100.0			
3/4" (19 mm)	1462.5	1462.5	23.3	23.3	76.7			
1/2" (12.5 mm)	3099.4	4561.9	49.4	72.7	27.3			
3/8" (9.5 mm)	1164.5	5726.4	18.6	91.2	8.8			
#4 (4.75 mm)	459.4	6185.8	7.3	98.6	1.4			
#8 (2.36 mm)	6.8	6192.6	0.1	98.7	1.3			
PAN (0 mm)	44.0	6236.6	0.70	100.00	0.00			

Other Test Results

Test Name	Date Procedure	Result Lab	Unit	Target	Specification Tested By	Comment
% -#200	09/20/07 14:45	1.042	%		Allen Harrison	
Total Moisture	09/20/07 14:45	4.4	%		Allen Harrison	
Wash Loss %	09/20/07 14:45	0.3	%		Allen Harrison	

Martin Marietta Materials

Quality Test Report

Plant 25108-Noblesville Sand and Gravel
Product 0919-Pea gravel
Specification

Sample Information

Sample No	1807553253	**Weather**	
Date Sampled	08/31/07 07:45	**Temp**	
Date Completed	09/04/07 09:00	**Split Sample** ☐	**Sequence**
Sampled By	Allen Harrison	**Resample** ☐	**Code**
Tested By	Allen Harrison	**Borehole**	
Type	Quality Monitoring	**Depth Top/Bottom**	
Method	Load-out Face		
Location		**Test Note**	
Process			
Ledge			
Other			

Gradation Results

Unit	Moist Mass	Dry Mass	Wash Mass	Moisture %	Wash Loss %
g	2575.40	2467.30	2446.80	4.4	0.8

Sieve	Mass Retained	Cum Mass Retained	Ind % Retained	% Retained	% Passing	Target	Specification	Comment
1/2" (12.5 mm)	3.9	3.9	0.2	0.2	99.8			
3/8" (9.5 mm)	22.4	26.3	0.9	1.1	98.9			
#4 (4.75 mm)	1669.4	1695.7	67.7	68.7	31.3			
#8 (2.36 mm)	653.1	2348.8	26.5	95.2	4.8			
#16 (1.18 mm)								
#30 (0.6 mm)								
#50 (0.3 mm)								
#100 (0.15 mm)								
#200 (0.075 mm)								
PAN (0 mm)	95.8	2444.6	3.9	100.0	0.0			

Other Test Results

Test Name	Date Procedure	Result Lab	Unit	Target	Specification Tested By	Comment
% -#200	08/31/07 07:45	4.714	%		Allen Harrison	
Total Moisture	08/31/07 07:45	4.4	%		Allen Harrison	
Wash Loss %	08/31/07 07:45	0.8	%		Allen Harrison	

Martin Marietta Materials

Quality Test Report

Plant 25108-Noblesville Sand and Gravel
Product 0955-#23/24 Sand
Specification

Sample Information

Sample No 1713612059
Date Sampled 11/19/07 09:53
Date Completed 11/19/07 14:00
Sampled By Allen Harrison
Tested By Allen Harrison
Type Production
Method Production Cone
Location
Process
Ledge
Other

Weather
Temp
Split Sample ☐
Resample ☐
Borehole
Depth Top/Bottom

Sequence Code

Test Note

Gradation Results

Unit	Moist Mass	Dry Mass	Wash Mass	Moisture %	Wash Loss %
g	456.90	428.00	426.20	6.8	0.4

Sieve	Mass Retained	Cum Mass Retained	Ind % Retained	% Retained	% Passing	Target	Specification	Comment
3/8" (9.5 mm)	0.0	0.0	0.0	0.0	100.0		100-100	
#4 (4.75 mm)	1.7	1.7	0.4	0.4	99.6		95-100	
#8 (2.36 mm)	33.7	35.4	7.9	8.3	91.7		80-100	
#16 (1.18 mm)	87.6	123.0	20.5	28.7	71.3		50-80	
#30 (0.6 mm)	119.9	242.9	28.0	56.8	43.2		25-60	
#50 (0.3 mm)	139.9	382.8	32.7	89.4	10.6		7-30	
#100 (0.15 mm)	38.7	421.5	9.0	98.5	1.5		1-10	
#200 (0.075 mm)	4.2	425.7	1.0	99.5	0.5		0-3	
PAN (0 mm)	0.3	426.0	0.1	100.0	0.0			

Other Test Results

Test Name	Date / Procedure	Result / Lab	Unit	Target	Specification / Tested By	Comment
FM	11/19/07 14:00	2.82				
		Noblesville Sand and Gravel			Allen Harrison	
Total Moisture	11/19/07 14:00	6.8	%			
		Noblesville Sand and Gravel			Allen Harrison	
Wash Loss %	11/19/07 14:00	0.4	%			
		Noblesville Sand and Gravel			Allen Harrison	

Martin Marietta Materials

Quality Test Report

Plant 25109-Noblesville Stone
Product 0430-#53 com
Specification

Sample Information

Sample No 1714665284
Date Sampled 08/29/07 10:15
Date Completed 08/30/07 10:00
Sampled By Allen Harrison
Tested By Allen Harrison
Type Quality Monitoring
Method Load-out Face
Location
Process
Ledge 9-14
Other

Weather
Temp
Split Sample ☐
Resample ☐
Borehole
Depth Top/Bottom

Sequence Code

Test Note

Gradation Results

Unit	Moist Mass	Dry Mass	Wash Mass	Moisture %	Wash Loss %
g	7525.20	7091.00	6382.30	6.1	10.0

Sieve	Mass Retained	Cum Mass Retained	Ind % Retained	% Retained	% Passing	Target	Specification	Comment
1 1/2" (37.5 mm)								
1" (25 mm)	552.2	552.2	7.8	7.8	92.2			
3/4" (19 mm)	707.8	1260.0	10.0	17.8	82.2			
1/2" (12.5 mm)	1027.1	2287.1	14.5	32.3	67.7			
3/8" (9.5 mm)	503.3	2790.4	7.1	39.4	60.6			
#4 (4.75 mm)	998.8	3789.2	14.1	53.4	46.6			
#8 (2.36 mm)	923.6	4712.8	13.0	66.5	33.5			
#16 (1.18 mm)	764.3	5477.1	10.8	77.2	22.8			
#30 (0.6 mm)	361.8	5838.9	5.1	82.3	17.7			
#50 (0.3 mm)	232.2	6071.1	3.3	85.6	14.4			
#100 (0.15 mm)	147.4	6218.5	2.1	87.7	12.3			
#200 (0.075 mm)	122.9	6341.4	1.7	89.4	10.6			
PAN (0 mm)	30.5	6371.9	0.4	100.0	0.0			

Other Test Results

Test Name	Date Procedure	Result Lab	Unit	Target	Specification Tested By	Comment
% -#200	08/29/07 10:15	10.424	%		Allen Harrison	
Total Moisture	08/29/07 10:15	6.1	%		Allen Harrison	
Wash Loss %	08/29/07 10:15	10.0	%		Allen Harrison	

Last Thirty Points For
Course L
Noblesville INDOT#2389

Ledger Information

Date Sampled	01/23/04	08/24/06				
Time Sampled	09:45 am	01:15 pm				
Inspector #	11	ah				
Test #	014	1207			Indiana	
Test Type	L	L	Averages		Specifications	
			Historic	Current	Lower	Upper
Gradation Results						
1 1/2"	100.0	100.0	100.0	100.0	100	100
1"	25.2	64.8	45.0	45.0	25	55
3/4"	1.3	9.3	5.3	5.3	0	10
1/2"	0.7	1.1	0.9	0.9	0	10
3/8"	0.6	0.9	0.8	0.8	0	10
#4	0.5	0.8	0.7	0.7	0	10
#8	0.5	0.8	0.7	0.7	0	10
Decant	0.3		0.3	0.3	0	3

Historic Start Date 01/01/03

Geomembrane and Geotextile Material Certification

Geomembrane

DURA-SKRIM® J30, J36 & J45

PROPERTIES	TEST METHOD	J30BB		J36BB		J45BB	
		Min. Roll Averages	Typical Roll Averages	Min. Roll Averages	Typical Roll Averages	Min. Roll Averages	Typical Roll Averages
Appearance		Black/Black		Black/Black		Black/Black	
Thickness	ASTM D 5199	27 mil	30 mil	32 mil	36 mil	40 mil	45 mil
Weight Lbs Per MSF (oz/yd²)	ASTM D 5261	126 lbs (18.14)	140 lbs (20.16)	151 lbs (21.74)	168 lbs (24.19)	189 lbs (27.21)	210 lbs (30.24)
Construction		**Extrusion laminated with encapsulated tri-directional scrim reinforcement					
Ply Adhesion	ASTM D 413	16 lbs	20 lbs	19 lbs	24 lbs	25 lbs	31 lbs
1" Tensile Strength	ASTM D 7003	88 lbf MD 63 lbf DD	110 lbf MD 79 lbf DD	90 lbf MD 70 lbf DD	113 lbf MD 87 lbf DD	110 lbf MD 84 lbf DD	138 lbf MD 105 lbf DD
1" Tensile Elongation @ Break % (Film Break)	ASTM D 7003	550 MD 550 DD	750 MD 750 DD	550 MD 550 DD	750 MD 750 DD	550 MD 550 DD	750 MD 750 DD
1" Tensile Elongation @ Peak % (Scrim Break)	ASTM D 7003	20 MD 20 DD	33 MD 33 DD	20 MD 20 DD	30 MD 31DD	20 MD 20 DD	36 MD 36 DD
Tongue Tear Strength	ASTM D 5884	75 lbf MD 75 lbf DD	97 lbf MD 90 lbf DD	75 lbf MD 75 lbf DD	104 lbf MD 92 lbf DD	100 lbf MD 100 lbf DD	117 lbf MD 118 lbf DD
Grab Tensile	ASTM D 7004	180 lbf MD 180 lbf DD	218 lbf MD 210 lbf DD	180 lbf MD 180 lbf DD	222 lbf MD 223 lbf DD	220 lbf MD 220 lbf DD	257 lbf MD 258 lbf DD
Trapezoid Tear	ASTM D 4533	120 lbf MD 120 lbf DD	146 lbf MD 141 lbf DD	130 lbf MD 130 lbf DD	189 lbf MD 172 lbf DD	160 lbf MD 160 lbf DD	193 lbf MD 191 lbf DD
* Dimensional Stability	ASTM D 1204	<1	<0.5	<1	<0.5	<1	<0.5
Puncture Resistance	ASTM D 4833	50 lbf	64 lbf	65 lbf	83 lbf	80 lbf	99 lbf
Maximum Use Temperature		180° F	180° F	180° F	180° F	180° F	180° F
Minimum Use Temperature		-70° F	-70° F	-70° F	-70° F	-70° F	-70° F

MD = Machine Direction
DD = Diagonal Directions

Note: Minimum Roll Averages are set to take into account product variability in addition to testing variability between laboratories.

*Dimensional Stability Maximum Value

**DURA-SKRIM J30BB, J36BB & J45BB are a four layer reinforced laminate containing no adhesives. The outer layers consist of a high strength polyethylene film manufactured using virgin grade resins and stabilizers for UV resistance in exposed applications. DURA-SKRIM J30BB, J36BB & J45BB are reinforced with a 1300 denier (minimum) tri-directional scrim reinforcement.

Note: RAVEN INDUSTRIES MAKES NO WARRANTIES AS TO THE FITNESS FOR A SPECIFIC USE OR MERCHANTABILITY OF PRODUCTS REFERRED TO, no guarantee of satisfactory results from reliance upon contained information or recommendations and disclaims all liability for resulting loss or damage.

PLANT LOCATION
Sioux Falls, South Dakota

SALES OFFICE
P.O. Box 5107
Sioux Falls, SD 57117-5107
(605) 335-0174
(605) 331-0333 FAX
800-635-3456

RAVEN INDUSTRIES

08/06

Geotextile

MIRAFI®

TECHNICAL DATA SHEET

Mirafi® 180N

Mirafi® 180N is a nonwoven geotextile composed of polypropylene fibers, which are formed into a stable network such that the fibers retain their relative position. 180N is inert to biological degradation and resists naturally encountered chemicals, alkalis, and acids.

Mechanical Properties	Test Method	Unit	Minimum Average Roll Value	
			MD	CD
Grab Tensile Strength	ASTM D 4632	kN (lbs)	0.9 (205)	0.9 (205)
Grab Tensile Elongation	ASTM D 4632	%	50	50
Trapezoid Tear Strength	ASTM D 4533	kN (lbs)	0.36 (80)	0.36 (80)
Mullen Burst Strength	ASTM D 3786	kPa (psi)	2618 (380)	
Puncture Strength	ASTM D 4833	kN (lbs)	0.58 (130)	
Apparent Opening Size (AOS)	ASTM D 4751	mm (U.S. Sieve)	0.180 (80)	
Permittivity	ASTM D 4491	sec^{-1}	1.2	
Permeability	ASTM D 4491	cm/sec	0.21	
Flow Rate	ASTM D 4491	l/min/m² (gal/min/ft²)	3866 (95)	
UV Resistance (at 500 hours)	ASTM D 4355	% strength retained	70	

Physical Properties	Test Method	Unit	Typical Value
Weight	ASTM D 5261	g/m² (oz/yd²)	278 (8.2)
Thickness	ASTM D 5199	mm (mils)	2.3 (90)
Roll Dimensions (width x length)	--	m (ft)	4.5 x 91 (15 x 300)
Roll Area	--	m² (yd²)	418 (500)
Estimated Roll Weight	--	kg (lb)	124 (273)

Disclaimer: MIRAFI® Construction Products assumes no liability for the accuracy or completeness of this information or for the ultimate use by the purchaser. MIRAFI® disclaims any and all express, implied, or statutory standards, warranties or guarantees, including without limitation any implied warranty as to merchantability or fitness for a particular purpose or arising from a course of dealing or usage of trade as to any equipment, materials, or information furnished herewith. This document should not be construed as engineering advice.