EPA Region 5 Records Ctr.
200131

100% SPECIFICATIONS

HIMCO DUMP SUPERFUND SITE
FINAL LANDFILL CLOSURE
ELKHART, INDIANA

Prepared For:

EPA United States Enviromental Protection Agency

Region 5
Chicago, Illinois

Prepared By:

US Army Corps
of Engineers
Omaha District

APRIL 1998

SPECIFICATIONS FOR CONSTRUCTION OF

HIMCO DUMP SUPERFUND SITE
FINAL LANDFILL CLOSURE
ELKHART, INDIANA

TABLE OF CONTENTS

DIVISION 1 GENERAL REQUIREMENTS

01010	SUMMARY OF WORK
01040	AS-BUILT DRAWINGS
01110	SAFETY, HEALTH, AND EMERGENCY RESPONSE (HTRW/UST)
01300	SUBMITTAL PROCEDURES
01402	CHEMICAL QUALITY MANAGEMENT
01420	VEHICLE AND BULKY DEBRIS DECONTAMINATION
01430	ENVIRONMENT PROTECTION
01440	CONTRACTOR QUALITY CONTROL
01460	SECURITY
01500	DECONTAMINATION AND DISPOSAL
01510	TOPOGRAPHIC SURVEYS
01520	PHOTOGRAPHIC DOCUMENTATION
01570	DISPOSAL OF WATER
01600	PROJECT RECORD DOCUMENTS
01630	DEMOBILIZATION AND PROJECT COMPLETION
01730	SITE OPERATION, MAINTENANCE, AND MONITORING MANUAL
01800	SITE MAINTENANCE PLAN

DIVISION 2 SITE WORK

02110	CLEARING AND GRUBBING
02210	GRADING
02211	EXCAVATION, INITIAL GRADING, AND RANDOM AND FOUNDATION FILL FOR LANDFILL COVER SYSTEMS
02221	WIRE MESH GABIONS
02221A	EARTHWORK FOR BUILDINGS
02222	EXCAVATION, TRENCHING, AND BACKFILLING FOR UTILITIES SYSTEMS
02223	SELECT FILL AND TOPSOIL FOR LANDFILL COVER
02252	LANDFILL GAS EXTRACTION WELLS AND EXTRACTION TRENCHES
02253	LANDFILL GAS MONITORING PROBES
02271	GEOMEMBRANE
02273	GEOCOMPOSITE
02442	GEOSYNTHETIC CLAY LINER (GCL)
02513	CONCRETE DECONTAMINATION PAD
02552	BITUMINOUS PAVEMENT, PORTLAND CEMENTCONCRETE AND AGGREGATE BASE COURSES
02720	STORM-DRAINAGE SYSTEM
02730	SUBDRAINAGE SYSTEM FOR LANDFILL COVER SYSTEMS
02831	CHAIN LINK FENCE
02910	MONITORING WELL INSTALLATION
02915	WELL ABANDONMENT
02935	TURF
02945	WETLAND MITIGATION

DIVISION 3 CONCRETE

03300A CONCRETE FOR BUILDING CONSTRUCTION

DIVISION 4 NOT USED

DIVISION 5 METALS

05120 STRUCTURAL STEEL
05210 STEEL JOISTS
05300 STEEL DECKING

DIVISION 6 NOT USED

DIVISION 7 THERMAL AND MOISTURE PROTECTION

07413 METAL ROOFING

DIVISION 8 NOT USED

DIVISION 9 FINISHES

09900 PAINTING, GENERAL

DIVISION 10 NOT USED

DIVISION 11 EQUIPMENT

11240 GRANULAR ACTIVATED CARBON ADSORPTION SYSTEM-LIQUID PHASE
11241 GRANULAR ACTIVATED CARBON ADSORPTION SYSTEM-VAPOR PHASE
11373 BLOWERS, AFTERCOOLERS, & CONTROLS

DIVISION 12 NOT USED

DIVISION 13 SPECIAL CONSTRUCTION

13570 LANDFILL GAS FLARE SYSTEM

DIVISION 14 NOT USED

DIVISION 15 MECHANICAL

15250 THERMAL INSULATION FOR MECHANICAL SYSTEMS
15350 FLARE PILOT GAS PIPING SYSTEM
15370 PROCESS PIPING AND APPURTENANCES

DIVISION 16 ELECTRICAL

16415 ELECTRICAL WORK

SECTION 01010
SUMMARY OF WORK

1. SCOPE
2. GENERAL REQUIREMENTS
3. MATERIALS AND EQUIPMENT
4. WORK TO BE PERFORMED
5. CONTRACTORS USE OF SITE

1. SCOPE

This section includes a brief description of the major construction activities included under this contract. Individual activities are more thoroughly described in subsequent sections of the Specifications. The Contractor shall be responsible for ensuring that sufficient equipment, labor, and materials, including health and safety and quality control provisions, are supplied to execute all work activities for final acceptance by the Contracting Officer.

2. GENERAL REQUIREMENTS

As minimum requirements, the Contractor shall observe and follow all appropriate and relevant procedures identified in applicable Federal, State, and local rules and regulations in conducting the work. Other applicable regulations not explicitly included in these Specifications shall be adhered to in conducting the work. The Contractor shall be responsible for contacting and informing the proper Federal, State, and Local agencies of the nature and timing of work on-site and for securing all necessary and applicable permits required to construct the work covered by this contract.

2.1. EXISTING FEATURES

The Contractor shall protect and maintain survey and grid stakes, existing monitoring wells, fences, roads, and any other items as directed in the field by the Contracting Officer against damage from equipment and vehicular traffic. Any damage shall be repaired by the Contractor at no additional cost.

2.2. UTILITIES

The Contractor shall protect utility lines or appurtenances that are to remain. Utility locations have been shown on the contract drawings based on record information and have not been field verified. It is the Contractor's responsibility to locate or verify existing utilities on-site. Any damage shall be repaired by the Contractor at no additional cost.

3. MATERIALS AND EQUIPMENT

Materials and equipment shall be provided in sufficient quantities for required construction activities. Materials and equipment shall not be stored or used in such a manner as to create unsafe conditions, and shall meet requirements of applicable codes and the approval of the Contracting Officer.

4. WORK TO BE PERFORMED

The project includes construction of the following: a multilayered cover system over the existing landfill, stormwater detention ponds/borrow area/wetlands development, access roads, a crushed rock decontamination facility, landfill gas collection system and treatment facility, hauling, and disposal of decontamination water, monitoring well installation, existing monitoring well abandonment, ditches, culverts, gabions, survey monuments, new chain link fence, and utility relocations and extensions. During the site grading, municipal wastes and construction debris will be encountered. The Contractor shall be required to excavate, regrade and compact landfill waste. The Contractor is required to submit work plans to include waste excavation and regrading, chemical quality management, air monitoring, and all other plans required to meet State, Local, and Federal Regulatory Requirements. The Contractor is responsible for providing all analytical services, temporary facilities and related materials and equipment for the performance of the described work. The major construction activities included are summarized below.

4.1. TEMPORARY SITE FACILITIES

Preparation and maintenance of temporary site facilities including staging areas, Contractor offices, security and communication operations, personnel and equipment decontamination facilities, project signs during the performance period of the Contract, and removal of same at the completion of remedial activities.

4.2. TEMPORARY SITE UTILITIES

This provision includes the operation, and maintenance of all temporary site utilities including telephone, electricity, water, and sanitation.

4.3. SITE OPERATIONAL PLANS

Development and implementation of the following plans, to include but not limited to the following, as identified in subsequent sections of the specifications.

Site-Specific Safety and Health Plan (SSHP).
Dust Migration Control Plan.
Spill and Discharge Control Plan.
Quality Control Plan.
Air Monitoring Plan.
Operations, Maintenance, and Monitoring Plan.
Landfill Excavation and Regrading Plan.

The Contractor shall also develop and implement all other plans required under this Contract and under applicable Federal, State, and local laws.

4.4. CLEARING AND GRUBBING

Activities associated with landfill clearing and clearing and grubbing of the site and with removal and disposal of debris either on-site or off-site, as required.

4.5. COVER SYSTEM

Construction of a multilayered cover systems, which includes landfill excavation and grading, compaction, random fill, foundation fill, select fill, topsoil, turf establishment, gas collection system, settlement monuments, a geosynthetic clay liner (GCL), a geomembrane liner, and a geocomposite drainage layer.

4.6. LANDFILL GAS COLLECTION SYSTEM AND TREATMENT FACILITY

Construction of an active landfill gas collection system and treatment facility.

4.7. DITCHES

Construction of perimeter drainage ditches, cover system subdrain ditches, and drainage ditches along access roads.

4.8. ROAD CONSTRUCTION

Excavation, grading, and an aggregate surface course for access roads.

4.9. GROUNDWATER MONITORING WELL ABANDONMENT AND CONSTRUCTION

Abandonment of selected existing groundwater monitoring wells and installation of new groundwater monitoring well in accordance with State of Indiana regulations.

4.10. LANDFILL GAS MONITORING PROBES

Installation of landfill gas monitoring probes around the perimeter of the landfill.

4.11. ANALYTICAL SERVICES

Perform all specified and necessary sampling and testing of soil, air and water.

4.12. SECURITY

Provide the necessary security for control of the site.

4.13. QUALITY CONTROL

Maintain a quality control program to ensure that all operations performed by the Contractor and all subcontractors are completed in accordance with the provisions of this Contract.

4.14. HEALTH AND SAFETY

Provide required health and safety including personnel and equipment.

4.15. PROJECT CLOSEOUT

Activities include, but are not limited to: removal of all Contractor and Contracting Officer equipment, removal of all temporary construction facilities as directed by the Contracting Officer, disconnection and restoration of all temporary utilities, and transfer of all records, drawings, and other project-related material to the Contracting Officer.

All other activities to satisfactorily complete all work covered by the specifications, any drawings not specifically discussed but necessary for the project construction and final acceptance.

All other work required by the Contracting Officer under the terms of this contract.

5. CONTRACTOR'S USE OF SITE

The Contractor will not have complete and exclusive use of the site for execution of the work. The Contractor shall share the site with USEPA and State of Indiana personnel or their designated representatives.

5.1. CONTRACTOR RESPONSIBILITY

The Contractor shall assume full responsibility for the protection and safekeeping of equipment and materials located on-site.

SECTION 01040

AS-BUILT DRAWINGS

1/95

INDEX

PART 1 GENERAL
- 1.1. SUMMARY (Not Applicable)
- 1.2. DEFINITIONS
- 1.3. GENERAL REQUIREMENTS
- 1.4. TRANSMITTAL OF RED-LINE DRAWINGS
- 1.5. PROCEDURE
- 1.6. PROCEDURES FOR POSTING MODIFICATION CHANGES TO DRAWINGS
- 1.7. WORD ABBREVIATIONS
- 1.8. LEGEND SHEETS
- 1.9. CONTRACTOR SHOP DRAWINGS
- 1.10. TOPOGRAPHIC SURVEY DRAWINGS

PART 2 PRODUCTS (Not Applicable)

PART 3 EXECUTION
- 3.1. GENERAL
- 3.2. SITE WORK
- 3.3. STRUCTURAL
- 3.4. MECHANICAL
- 3.5. ELECTRICAL

SECTION 01040

AS-BUILT DRAWINGS
1/95

PART 1. GENERAL

1.1. SUMMARY (Not Applicable)

1.2. DEFINITIONS

The definitions listed below form a part of this specification.

1.2.1. Red-Line Drawings

Contract drawings marked-up to show actual work performed to include necessary sketches, modification drawings, shop drawings and notes. Green ink is used to indicate work deleted from the contract. Red ink is used for additions and deviations from the contract.

1.2.2. As-Built Drawings

Professionally finished Mylar Drawings developed from the original contract drawings that include all of the information from the Red-Line Drawings and suitable for half-size reproduction.

1.2.3. Mylar Drawings

Drawings on 3 or 5 mil frosted mylar, similar or equal to K & E Stabilene.

1.2.4. Black-Line Drawings

Paper drawings reproduced from mylar drawings and suitable for microfilming.

1.2.5. Full-Size Drawings

28" x 40" nominal size (D size) drawings with all details visually readable.

1.2.6. Half-Size Drawings

14" x 20" nominal size drawings with all details visually readable.

1.2.7. Modification Circle

A circle with a horizontal line through the center of the circle. The top half will contain the letter "P" with the bottom half containing the Modification number. The lettering standard will be 120/6 WRICO or similar.

1.3. GENERAL REQUIREMENTS

The work includes creation of two sets of Red-Line Drawings that will be used by the Contracting Officer to develop the permanent record As-Built Drawings of the construction. The Contractor is responsible for the development of the Red-Line Drawings. The Red-Line Drawings shall include all major features of the work and all details to the same level of detail as the original contract set of drawings. All changes from the contract drawings, including but not limited to modifications, letters of clarification, changes which were made during construction, and/or additional information which was uncovered during construction, shall be accurately and neatly recorded on the Red-Line Drawings using the same symbology, terminology, and general quality as the original set of contract drawings. All sheets affected by a change will be revised. The transmittal requirement for Red-Line Drawings shall be shown as a separate activity on the Contractor prepared progress chart or network analysis system whichever is applicable. The Contractor shall also develop topographic survey drawings in accordance with specification section \=01510=\ TOPOGRAPHIC SURVEY.

1.4. TRANSMITTAL OF RED-LINE DRAWINGS

The Red-Line Drawings shall include all changes up to the time of acceptance of the project, unless otherwise directed by the Contracting Officer. The Contractor shall provide a Red-Line Drawing sheet for each sheet in the current contract drawing set. Two sets of the Red-Line Drawings shall be submitted to the Contracting Officer at the time of acceptance unless otherwise directed by the Contracting Officer. If Red-Line Drawings do not accurately depict all as-built conditions including all executed contract modifications and changes made during construction, the Red-Line Drawings will be returned to the Contractor for completion at no additional cost to the Contracting Officer.

1.5. PROCEDURE

The Contractor shall maintain two sets of full-size Red-Line Drawings to fully indicate as-built conditions. These drawings shall be maintained in a current condition at all times until the completion of the contract and shall be available for review by the Contracting Officer at all times. All as-built conditions shall be indicated on the Red-Line Drawings within (2) two days after work activity is complete or be entered as a deficiency on tracking system (see Section \=01440=\, CONTRACTOR QUALITY CONTROL).

1.6. PROCEDURES FOR POSTING MODIFICATION CHANGES TO DRAWINGS

1.6.1. Follow directions in the modification for posting descriptive changes.

1.6.2. A Modification Circle shall be placed at the location of each deletion.

1.6.3. For all new details or sections which are added to a drawing, place a Modification Circle by the detail or section title.

1.6.4. For minor changes to a drawing, place a Modification Circle by the area changed on the drawing (each location).

1.6.5. For major changes to a drawing, place a Modification Circle by the title of the affected plan, section or detail (each location).

1.6.6. For changes to schedules on drawings, a Modification Circle shall be placed either by the schedule heading or by the change in the schedule.

1.6.7. The Modification Circle size shall be 1/2-inch diameter unless the area where the circle is to be placed is crowded. Use smaller size circle for crowded areas.

1.7. WORD ABBREVIATIONS

1.7.1. Abbreviations shown on the abbreviation sheet shall be used to describe all work items. Additional word abbreviations, not found on the abbreviation sheet but necessary to describe the work, shall be properly identified and incorporated with the other standard word abbreviations.

1.8. LEGEND SHEETS

1.8.1. Symbols which conflict with those on the original contract legend sheet shall not be used. Additional symbols, properly identified, necessary to depict any additional work items, shall be added to the legend sheet or supplemental legend. Those projects that do not have legend sheets may use supplemental legends on each sheet where symbol is shown.

1.9. CONTRACTOR SHOP DRAWINGS

Contractor shop drawings and/or fully developed project plans, prepared by others and furnished for a site adaptation, shall be carefully reviewed for technical adequacy and for conformance to criteria furnished. Design plans prepared by others shall identify it's designer's name on the Red-Line Drawings.

1.10. TOPOGRAPHIC SURVEY

The Contractor shall also develop topographic survey drawings in accordance with specification section \=01510=\ TOPOGRAPHIC SURVEY.

PART 2. PRODUCTS (Not Applicable)

PART 3. EXECUTION

Red-Line Drawings shall include as-built information to the same level of detail as shown on the original details, unless otherwise specified. The Contractor shall provide any additional Full-Size Drawings as required to display all the details.

3.1. GENERAL

Red-Line Drawings shall include the following:

3.1.1. All changes and modifications to the contract.

3.1.2. Where contract drawings or specifications allow for options, include only the option selected. The option selected and actually constructed shall be shown on the Red-Line Drawings.

3.1.3. Systems designed or enhanced by the Contractor shall be shown on the Red-Line Drawings.

3.2. SITE WORK

3.2.1. Utilities

All utilities, including piping for the landfill gas collection system, shall be shown whether active, inactive, on the original contract drawings and final topographic survey drawing. The type of utility, location, general direction, size, material make-up and depth shall be shown. The location and description of any utility line or other installations of any kind known to exist within the construction area shall be shown. The location shall include dimensions to permanent features.

3.2.2. Structures

All structures above and below ground shall be shown. The size, material make-up, location, height, and/or depth shall be shown. Manholes shall show rim elevation and invert elevations as applicable. Power poles shall show electrical equipment and voltage rating.

3.2.3. Grades

Grade or alignment of the cover system, roads, structures, or utilities shall be corrected if any changes were made from the contract drawings. Elevations shall be corrected if changes were made in site grading.

3.3. STRUCTURAL

Shop drawings that deviate from the contract drawings shall be incorporated in the Red-Line Drawings.

3.4. MECHANICAL

3.4.1. Equipment/Materials/Layout

Equipment, materials, piping, and layout shall be shown to reflect actual installation and size. Routing changes shall be shown.

3.4.2. Plumbing

Piping and fixtures shall be shown to reflect the type of material, size and the route or location.

3.5. ELECTRICAL

3.5.1. Electrical Panels

All contract drawing panel schedules shall be revised to show as-built conditions. Home-run circuit designations on electrical drawings shall accurately correspond to the as-built panel schedules.

3.5.2. Controls

All control diagrams in contract drawings shall be revised to reflect as-built conditions, and setpoints.

SECTION 01110

SAFETY, HEALTH, AND EMERGENCY RESPONSE (HTRW/UST)
04/94

Attachments: Tables 01110-1 thru 01110-11

INDEX

PART 1 GENERAL
1.1 REFERENCES
1.2 DESCRIPTION OF WORK
1.3 SUBMITTALS
1.4 REGULATORY REQUIREMENTS
1.5 PRECONSTRUCTION SAFETY CONFERENCE
1.6 SAFETY AND HEALTH PROGRAM
1.7 SITE SAFETY AND HEALTH PLAN
1.8 SITE DESCRIPTION AND CONTAMINATION CHARACTERIZATION
1.9 HAZARD/RISK ANALYSIS
1.10 ACTIVITY HAZARD ANALYSES
1.11 STAFF ORGANIZATION, QUALIFICATIONS, AND RESPONSIBILITIES
1.12 TRAINING
1.13 PERSONAL PROTECTIVE EQUIPMENT
1.14 MEDICAL SURVEILLANCE
1.15 NOT USED
1.16 EXPOSURE MONITORING/AIR SAMPLING PROGRAM
1.17 HEAT AND COLD STRESS MONITORING
1.18 SAFETY PROCEDURES, ENGINEERING CONTROLS AND WORK PRACTICES
1.19 SITE CONTROL MEASURES
1.20 PERSONAL HYGIENE AND DECONTAMINATION
1.21 EQUIPMENT DECONTAMINATION
1.22 EMERGENCY EQUIPMENT AND FIRST AID REQUIREMENTS
1.23 EMERGENCY RESPONSE AND CONTINGENCY PROCEDURES
1.24 CERTIFICATE OF WORKER/VISITOR ACKNOWLEDGEMENT
1.25 INSPECTIONS
1.26 SAFETY AND HEALTH PHASE-OUT REPORT

SECTION 01110

SAFETY, HEALTH, AND EMERGENCY RESPONSE (HTRW/UST)
04/94

PART 1. GENERAL

1.1. REFERENCES

The publications listed below form a part of this specification to the extent referenced. The publications are referred to in the text by basic designation only.

AMERICAN CONFERENCE OF GOVERNMENTAL INDUSTRIAL HYGIENISTS (ACGIH)

\-ACGIH-02-\	(1993) 1993-1994 Threshold Limit Values for Chemical Substances and Physical Agents and Biological Exposure Indices

AMERICAN NATIONAL STANDARDS INSTITUTE (ANSI)

\-ANSI Z358.1-\	(1990) Emergency Eyewash and Shower Equipment

CODE OF FEDERAL REGULATIONS (CFR)

\-CFR 29 Part 1904-\	Recording and Reporting Occupational Injuries and Illnesses
\-CFR 29 Part 1910-\	Occupational Safety and Health Standards
\-CFR 29 Part 1926-\	Safety and Health Regulations for Construction
\-CFR 49 Part 171-\	General Information, Regulations, and Definitions
\-CFR 49 Part 172-\	Hazardous Materials Table, Special Provisions, Hazardous Materials Communications, Emergency Response Information, and Training Requirements

NATIONAL INSTITUTE FOR OCCUPATIONAL SAFETY AND HEALTH (NIOSH)

\-NIOSH Pub No. 85-115-\	(1985) Occupational Safety and Health Guidance Manual for Hazardous Waste Site Activities

1.2. DESCRIPTION OF WORK

This section specifies a Site Safety and Health Plan (SSHP) and provides additional requirements for implementing the hazard analysis provisions of 29 CFR 1910.120(b)(4)(ii)(A). The requirements shall apply to work performed in both "contaminated" and "clean" areas.

1.3. SUBMITTALS

Contracting Officer(CO) approval is required for submittals with a "GA" designation; submittals having an "FIO" designation are for information only. The following shall be submitted in accordance with Section \=01300=\ SUBMITTAL PROCEDURES:

SD-04 Drawings\

Work Zones\; *FIO*\.

Drawings shall include initial work zone boundaries: Exclusion Zone (EZ), including restricted and regulated areas; Contamination Reduction Zone (CRZ); and Support Zone (SZ).

Decontamination Facilities\; *FIO*\.

Drawings shall show the layout of the personnel and equipment decontamination areas .

SD-09 Reports\

Monitoring/Sampling Results\; *FIO*\.

Personnel exposure monitoring/sampling results.

Site control log\; *FIO*\.

Record of each entry and exit into the site, as specified.

1.4. REGULATORY REQUIREMENTS

Work performed under this contract shall comply with applicable Federal, state, and local safety and occupational health laws and regulations. This includes, but is not limited to, Occupational Safety and Health Administration (OSHA) standards, \-CFR 29 Part 1910-\, especially Section .120, "Hazardous Waste Site Operations and Emergency Response" and \-CFR 29 Part 1926-\, especially Section .65, "Hazardous Waste Site Operations and Emergency Response". Matters of interpretation of standards shall be submitted to the appropriate administrative agency for resolution before starting work. Where the requirements of this specification, applicable laws, criteria, ordinances, regulations, and referenced documents vary, the most stringent requirements shall apply.

1.5. PRECONSTRUCTION SAFETY CONFERENCE

A preconstruction conference shall be scheduled prior to the beginning of site work at which time representatives of the CO will review and discuss requirements relative to planning and administration of the overall safety program.

1.6. SAFETY AND HEALTH PROGRAM

OSHA Standards \-CFR 29 Part 1910-\, Section .120 (b) and \-CFR 29 Part 1926-\, Section .65 (b) require employers to develop and implement a written Safety and Health Program for employees involved in hazardous waste operations. The site-specific program requirements of the OSHA Standards shall be integrated into one site-specific document, the Site Safety and Health Plan (SSHP). The SSHP shall interface with the employer's overall Safety and Health Program. Any portions of the overall Safety and Health Program that are referenced in the SSHP shall be included as appendices to the SSHP.

1.7. SITE SAFETY AND HEALTH PLAN

1.7.1. Preparation and Implementation

A Site Safety and Health Plan (SSHP) shall be prepared covering onsite work, including construction and 1 year Operation and Maintenance (O&M), to be performed by the Contractor and all subcontractors. The Safety and Health Manager shall be responsible for the development, implementation and oversight of the SSHP. The SSHP shall establish, in detail, the protocols necessary for the anticipation, recognition, evaluation, and control of hazards associated with each task performed. The SSHP shall address site-specific safety and health requirements and procedures based upon site-specific conditions. The level of detail provided in the SSHP shall be tailored to the type of work, complexity of operations to be performed, and hazards anticipated. Details about some activities may not be available when the initial SSHP is prepared and submitted. Therefore, the SSHP shall address, in as much detail as possible, anticipated tasks, their related hazards and anticipated control measures. Additional details shall be included in the activity hazard analyses as described in paragraph ACTIVITY HAZARD ANALYSES.

1.7.2. Acceptance and Modifications

Prior to submittal, the SSHP shall be signed and dated by the Safety and Health Manager and the Site Superintendent. The SSHP shall be submitted for review 21 days prior to the Preconstruction Safety Conference. Deficiencies in the SSHP will be discussed at the preconstruction safety conference, and the SSHP shall be revised to correct the deficiencies and resubmitted for acceptance. Onsite work shall not begin until the plan has been accepted. A copy of the written SSHP shall be maintained onsite. As work proceeds, the SSHP shall be adapted to new situations and new conditions. Changes and modifications to the accepted SSHP shall be made with the knowledge and concurrence of the Safety and Health Manager, the Site Superintendent, and the Contracting Officer. Should any unforeseen hazard become evident during the performance of the work, the Site Safety and Health Officer (SSHO) shall bring such hazard to the attention of the Safety and Health Manager, the Site Superintendent, and the Contracting Officer, both verbally and in writing, for resolution as soon as possible. In the interim, necessary action shall be taken to re-establish and maintain safe working conditions in order to safeguard onsite personnel, visitors, the public, and the environment. Disregard for the provisions of this specification or the accepted SSHP shall be cause for stopping of work until the matter has been rectified.

1.7.3. Availability

The SSHP shall be made available in accordance with \-CFR 29 Part 1910-\, Section .120 (b)(1)(v) and \-CFR 29 Part 1926-\, Section .65 (b)(1)(v).

1.7.4. Elements

Topics required by \-CFR 29 Part 1910-\, Section .120 (b)(4) \-CFR 29 Part 1926-\, Section .65 (b)(4) shall be addressed in the SSHP. Where the use of a specific topic is not applicable to the project, the SSHP shall include a statement to justify its omission or reduced level of detail and establish that adequate consideration was given the topic.

1.8. SITE DESCRIPTION AND CONTAMINATION CHARACTERIZATION

1.8.1. Project/Site Conditions

The following information is a record of site contaminants and a description of the site. This information is provided to assist in preparing the SSHP. Additional sources of information are available as listed below.

1.8.1.1. Site Information

The Himco site is a closed landfill located at the northwest corner of County Road 10 and the Nappanee Street extension in the town of Elkhart, in Elkhart County, Indiana. The site covers approximately 50 acres. The site is bounded on the north by a tree line and northernmost extent of the gravel pit pond: on the west by two excavated ponds; on the south by County Road 10 and private residences; and on the east by Nappanee Street extension. There is a sand access road into the southeast corner of the site near the intersection of County Road 10 and Nappanee Street extension. Although a locked gate is present across this road, vehicles can easily drive around the gate and enter the site.

There are remnants of a gravel pit operation in the northeast corner of the site. An old truck scale and concrete structures as a part of the gravel pit operation are present in this area. The gravel pit itself is filled with water which is approximately 30 feet deep. Two other smaller and shallower ponds, commonly referred to as the L pond and the small pond, exist on the west side of the site.

Himco Dump was privately operated by Himco Waste Away Service, Inc. between 1960 and September 1976. The area was initially a marsh and grassland. There was no liner, no leachate or gas recovery system constructed for the landfill. According to the former operator at the site, refuse was placed at ground surface across the site with the exception of trench filling in the eastern quarter of the site. Five trenches 10 to 15 feet deep and 30 feet long were excavated in this area. Paper refuse was dumped in these trenches and burned. The former operator also reported that essentially two-thirds of the waste present in the dump was calcium sulfate from Miles Laboratories. AS much as 360 tons/day were dumped over an unspecified duration. Sodium and potassium bromide compounds were also part of the industrial pharmaceutical wastes disposed of at the Himco site.

Other wastes known to be accepted at the landfill included hospital wastes and outdated drugs.

The landfill had no borrow source; the owners obtained sandy soil for daily cover from the gravel pit to the north, and excavated pond to the west and essentially anywhere around the perimeter of the site where sand was available. In 1976, the landfill was closed and a final cover was laid down consisting of approximately one foot of sand overlying six inches of calcium sulfate.

1.8.1.2. List of Available Documents

Further information is available from the Himco Superfund Repository; Final Remedial Investigation Report, Himco Dump, Remedial Investigation/Feasibility Study, Elkhart, Indiana, September 1992, by SEC Donohue.

Pre-Design Technical Memorandum by USACE Omaha District dated 12-95.

1.8.2. Plan Requirements

The SSHP shall include a site description and contamination characterization section that addresses the following elements:

a. Description of site location, topography, size and past uses of the site.

b. A list of contaminants which may present occupational health and safety hazards. This list shall be created by evaluating the analytical results in this section and by researching sources of information from past site investigation activities. Groundwater detections include: VOCs, SVOCs, and metals. See Tables 1110-4 - 01110-10 for specific compounds and concentrations. Surface soil detections included: VOCs, SVOCs, and metals. See Tables 01110-4 - 01110-10 for specific compounds and concentrations. Mass Gas VOC detections are found in Table 1110-11. Methane and Hydrogen sulfide gases are also chemical hazards. The contamination characterization shall be reviewed and revised if new chemicals are identified as work progresses.

1.9. HAZARD/RISK ANALYSIS

The SSHP shall include a safety and health hazard/risk analysis for each site task and operation to be performed. The hazard/risk analysis shall provide information necessary for determining safety and health procedures, equipment, and training to protect Contracting Officer onsite personnel, the environment, and the public. Available site information shall be reviewed when preparing the "Hazard/Risk Analysis" section of the SSHP. The following elements, at a minimum, shall be addressed.

1.9.1. Site Tasks and Operations (Workplan)

The SSHP shall include a comprehensive section that addresses the tasks and objectives of the site operations and the logistics and resources required to reach those tasks and objectives. Based on the type of remediation required, the

following is a list of anticipated major site tasks and operations to be performed:

Tasks:	Initial Minimum PPE Levels:
Site Mobilization	Level D
Site Regrading	Level B
Excavation of Contaminated Soils	Level B
Handling Contaminated Water	Level C
Installing Perimeter Monitoring Probes	Modified Leve D
Installing Landfill Gas Monitoring Probes	Modified Level D
Monitoring Well Installation	Modified Level D
Backfilling and Grading	Modified Level D
Demobilization	Level D

This is not a complete list of site tasks and operations, therefore, it shall be expanded and/or revised, during preparation of the SSHP as necessary.

1.9.2. Hazards

The following potential hazards may be encountered during site work. These are not complete lists, therefore, they shall be expanded and/or revised as necessary during preparation of the SSHP.

1.9.2.1. Safety Hazards

Use of power tools.
Open pits, trenches, and ditches.(29 CFR 1926.650-652)
Unguarded, improperly operated, moving equipment.
Slippery and unstable surfaces, steep grades, uneven terrain.
Speeding and improperly moving vehicles.
Slips, trips and falls.

1.9.2.2. Chemical Hazards

Potential chemical hazards that may be encountered during site work are discussed in paragraph SITE DESCRIPTION AND CONTAMINATION CHARACTERIZATION. See Tables 01110-4 - 01110-11 for specific compounds and concentrations. The Hazard/Risk Analysis section of the SSHP shall describe the chemical, physical, and toxicological properties of contaminants, sources and pathways of employee exposures, anticipated onsite and offsite exposure level potentials, and regulatory (including Federal, state, and local) or recommended protective exposure standards. The SSHP shall also address employee exposure to hazardous substances brought onsite, and shall comply with the requirements of \-CFR 29 Part 1910-\, Section .1200 and \-CFR 29 Part 1926-\, Section .59, Hazard Communication.

1.9.2.3. Physical Agents

Noise.
Buried utility lines and energized overhead and underground power lines.
Flammable materials in limited acces areas.
Dust.
Cold Stress.

Heat Stress.

1.9.2.4. Biological Hazards

Poisonous plants, insect bites/stings and animals.
Hospital and Medical Wastes.(29 CFR 1910.1030)

1.9.3. Action Levels

1.9.3.1. General

Action levels shall be established for the situations listed below, at a minimum. The action levels and required actions (engineering controls, changes in PPE, etc.) shall be presented in the SSHP in both text and tabular form.

a. Implementation of engineering controls and work practices.
b. Upgrade or downgrade in level of personal protective equipment.
c. Work stoppage and/or emergency evacuation of onsite personnel.
d. Prevention and/or minimization of public exposures to hazards created by site activities.

1.9.3.2. Confined Space Entry

Entry into and work in a confined space will not be allowed when oxygen readings are less than 19.5% or greater than 23.5% or if the Lower Flammable Limit (LFL) reading is greater than 10%, unless these conditions are adequately addressed in the confined space entry program. In addition, action levels for toxic atmospheres shall be determined.

1.10. ACTIVITY HAZARD ANALYSES

Prior to beginning each major phase of work, an Activity Hazard Analysis shall be prepared by the Contractor performing that work and submitted for review and acceptance. A major phase of work is defined as an operation involving a type of work presenting hazards not experienced in previous operations or where a new subcontractor or work crew is to perform. The analysis shall define the activities to be performed and identify the sequence of work, the specific hazards anticipated, and the control measures to be implemented to eliminate or reduce each hazard to an acceptable level. Work shall not proceed on that phase until the activity hazard analysis has been accepted and a preparatory meeting has been conducted by the Contractor to discuss its contents with everyone engaged in the activities, including the onsite representatives. The activity hazard analyses shall be continuously reviewed and when appropriate modified to address changing site conditions or operations, with the concurrence of the Safety and Health Manager, the Site Superintendent, and the Contracting Officer. Activity hazard analyses shall be attached to and become a part of the SSHP.

1.11. STAFF ORGANIZATION, QUALIFICATIONS, AND RESPONSIBILITIES

An organizational structure shall be developed that sets forth lines of authority (chain of command), responsibilities, and communication procedures concerning site safety, health, and emergency response. This organizational structure shall cover management, supervisors and employees of the Contractor and subcontractors.

The structure shall include the means for coordinating and controlling work activities of subcontractors and suppliers. The SSHP shall include a description of this organizational structure as well as qualifications and responsibilities of each of the following individuals. The Contractor shall obtain Contracting Officer's acceptance before replacing any member of the Safety and Health Staff. Requests shall include the names, qualifications, duties, and responsibilities of each proposed replacement.

1.11.1. Site Superintendent

A Site Superintendent, who has responsibility to implement the SSHP, the authority to direct work performed under this contract and verify compliance, shall be designated.

1.11.2. Safety and Health Manager

1.11.2.1. Qualifications

The services of an Industrial Hygienist certified by the American Board of Industrial Hygiene shall be utilized. The name, qualifications (education summary and documentation, ABIH certificate), and work experience summary shall be included in the SSHP. The Safety and Health Manager shall have the following additional qualifications:

a. A minimum of 3 years experience in developing and implementing safety and health programs at hazardous waste sites.

b. Documented experience in supervising professional and technician level personnel.

c. Documented experience in developing worker exposure assessment programs and air monitoring programs and techniques.

d. Documented experience in the development of personal protective equipment programs, including programs for working in and around potentially toxic, flammable and combustible atmospheres and confined spaces.

e. Working knowledge of state and Federal occupational safety and health regulations.

1.11.2.2. Responsibilities

The Safety and Health Manager shall:

a. Be responsible for the development, implementation, oversight, and enforcement of the SSHP.

b. Sign and date the SSHP prior to submittal.

c. Conduct initial site-specific training.

d. Be present onsite during the first 3 days of remedial activities and at the startup of each new major phase.

e. Visit the site as needed and at least once per month for the duration of activities, to audit the effectiveness of the SSHP.

f. Be available for emergencies.

g. Provide onsite consultation as needed to ensure the SSHP is fully implemented.

h. Coordinate any modifications to the SSHP with the Site Superintendent, the SSHO, and the Contracting Officer.

i. Provide continued support for upgrading/downgrading of the level of personal protection.

j. Be responsible for evaluating air monitoring data and recommending changes to engineering controls, work practices, and PPE.

k. Review accident reports and results of daily inspections.

l. Serve as a member of the Contractor's quality control staff.

1.11.3. Site Safety and Health Officer (SSHO)

1.11.3.1. Qualifications

An individual and one alternate shall be designated the Site Safety and Health Officer (SSHO). The name, qualifications (education and training summary and documentation), and work experience of the Site Safety and Health Officer and alternate shall be included in the SSHP. The SSHO shall have the following qualifications:

a. A minimum of 2 years experience in implementing safety and health programs at hazardous waste sites where Level C personal protective equipment was required.

b. Documented experience in construction techniques and construction safety procedures.

c. Working knowledge of Federal and state occupational safety and health regulations.

d. Specific training in personal and respiratory protective equipment program implementation, confined space program oversight, and in the proper use of air monitoring instruments, and air sampling methods.

1.11.3.2. Responsibilities

The Site Safety and Health Officer shall:

a. Assist and represent the Safety and Health Manager in onsite training and the day to day onsite implementation and enforcement of the accepted SSHP,

b. Be assigned to the site on a full time basis for the duration of field activities. The SSHO shall have no duties other than Safety and Health related duties. If operations are performed during more than one work shift per day, a site Safety and Health Officer shall be present for each shift.

c. Have authority to ensure site compliance with specified safety and health requirements, Federal, state and OSHA regulations and all aspects of the SSHP including, but not limited to, activity hazard analyses, air monitoring, use of PPE, decontamination, site control, standard operating procedures used to minimize hazards, safe use of engineering controls, the emergency response plan, confined space entry procedures, spill containment program, and preparation of records by performing a daily safety and health inspection and documenting results on the Daily Safety Inspection Log.

d. Have authority to stop work if unacceptable health or safety conditions exist, and take necessary action to re-establish and maintain safe working conditions.

e. Consult with and coordinate any modifications to the SSHP with the Safety and Health Manager, the Site Superintendent, and the Contracting Officer.

f. Serve as a member of the Contractor's quality control staff on matters relating to safety and health.

g. Conduct accident investigations and prepare accident reports.

h. Review results of daily quality control inspections and document safety and health findings into the Daily Safety Inspection Log.

i. In coordination with site management and the Safety and Health Manager, recommend corrective actions for identified deficiencies and oversee the corrective actions.

1.11.4. Occupational Physician

1.11.4.1. Qualifications

The services of a licensed physician, who is certified in occupational medicine by the American Board of Preventative Medicine, or who, by necessary training and experience is Board eligible, shall be utilized. The physician shall be familiar with this site's hazards and the scope of this project. The medical consultant's name, qualifications, and knowledge of the site's conditions and proposed activities shall be included in the SSHP.

1.11.4.2. Responsibilities

The physician shall be responsible for the determination of medical surveillance protocols and for review of examination/test results performed in compliance with

\-CFR 29 Part 1910-\, Section .120 (f) and \-CFR 29 Part 1926-\, Section .65 (f) and paragraph MEDICAL SURVEILLANCE.

1.11.5. Persons Certified in First Aid and CPR

At least two persons who are currently certified in first aid and CPR by the American Red Cross or other approved agency shall be onsite at all times during site operations. They shall be trained in universal precautions and the use of PPE as described in the Bloodborne Pathogens Standard of \-CFR 29 Part 1910-\, Section .1030. These persons may perform other duties but shall be immediately available to render first aid when needed.

1.11.6. Safety and Health Technicians

For each work crew in the exclusion zone, one person, designated as a Safety and Health technician, shall perform activities such as air monitoring, decontamination, and safety oversight on behalf of the SSHO. They shall have appropriate training equivalent to the SSHO in each specific area for which they have responsibility and shall report to and be under the supervision of the SSHO.

1.12. TRAINING

Personnel shall receive training in accordance with the Contractor's written safety and health training program and \-CFR 29 Part 1910-\ Section .120, \-CFR 29 Part 1926-\ Section .65, and \-CFR 29 Part 1926-\ Section .21. The SSHP shall include a section describing training requirements.

1.12.1. General Hazardous Waste Operations Training

Personnel entering the exclusion or contamination reduction zones shall have successfully completed 40 hours of hazardous waste instruction off the site; 3 days actual field experience under the direct supervision of a trained, experienced supervisor; and 8 hours refresher training annually. Onsite supervisors shall have completed the above training and 8 hours of additional, specialized training covering at least the following topics: the employer's safety and health program, personal protective equipment program, spill containment program, and health hazard monitoring procedures and techniques. Copies of current training certification statements shall be submitted prior to initial entry onto the work site.

1.12.2. Site-specific Training

Site-specific training sessions shall be documented, including the date, attendance, subjects discussed, and names of individual(s) who conducted the meeting. Documentation shall be maintained and copies furnished to the designated authority on request.

1.12.2.1. Initial Session (Preentry Briefing)

Prior to commencement of onsite field activities, all site employees, including those assigned only to the Support Zone, shall attend a site-specific safety and health training session of at least 4 hours duration. This session shall be

conducted by the Safety and Health Manager and the Site Safety and Health Officer to ensure that all personnel are familiar with requirements and responsibilities for maintaining a safe and healthful work environment. Procedures and contents of the accepted SSHP and site-specific training issues shall be thoroughly discussed. The Contracting Officer shall be notified at least 7 days prior to the initial site-specific training session so the Contracting Officer personnel involved in the project may attend.

1.12.2.2. Periodic Sessions

Periodic onsite training shall be conducted by the SSHO at least weekly for personnel assigned to work at the site during the following week . The training shall address safety and health procedures, work practices, any changes in the SSHP, activity hazard analyses, work tasks, or schedule; results of previous week's air monitoring, review of safety discrepancies and accidents. Should an operational change affecting onsite field work be made, a meeting prior to implementation of the change shall be convened to explain safety and health procedures. Site-specific training sessions for new personnel, visitors, and suppliers shall be conducted by the SSHO using the training curriculum outlines developed by the Safety and Health Manager.

1.12.2.3. Other Training

The Safety and Health Manager shall provide training as specified by \-CFR 29 Part 1910-\ Section .146, for employees who are required to supervise, standby, or enter permit-required confined spaces. Persons involved in any aspect of the transportation of hazardous materials shall be trained in accordance with \-CFR 49 Part 172-\ Subpart H.

1.13. PERSONAL PROTECTIVE EQUIPMENT

1.13.1. General

In accordance with \-CFR 29 Part 1910-\ Section .120 (g)(5) and \-CFR 29 Part 1926-\ Section .65 (g)(5), a written Personal Protective Equipment (PPE) program which addresses the elements listed in that regulation, and which complies with respiratory protection program requirements of \-CFR 29 Part 1910-\ Section .134, is to be included in the employer's Safety and Health Program. The Site Safety and Health Plan shall detail the minimum PPE ensembles (including respirators) and specific materials from which the PPE components are constructed for each site-specific task and operation to be performed, based upon the hazard/risk analysis. Components of levels of protection (B, C, D and modifications) must be relevant to site-specific conditions, including heat and cold stress potential and safety hazards. Only respirators approved by NIOSH shall be used. Onsite personnel shall be provided with appropriate personal protective equipment. Protective equipment and clothing shall be kept clean and well maintained. The PPE section of the SSHP shall include site-specific procedures to determine PPE program effectiveness and for onsite fit-testing of respirators, cleaning, maintenance, inspection, and storage of PPE.

1.13.2. Levels of Protection

The Safety and Health Manager shall establish appropriate levels of protection for each work activity based on review of historical site information, existing data, an evaluation of the potential for exposure (inhalation, dermal, ingestion, and injection) during each task, past air monitoring results, and a continuing safety and health monitoring program. The Safety and Health Manager shall also establish action levels for upgrade or downgrade in levels of PPE from the following specified minimum levels of protection. Protocols and the communication network for changing the level of protection shall be described in the SSHP. The PPE reassessment protocol shall address air monitoring results, potential for exposure, changes in site conditions, work phases, job tasks, weather, temperature extremes, individual medical considerations, etc.

1.13.2.1. Components of Levels of Protection

The following items constitute minimum protective clothing and equipment ensembles to be utilized during this project:

Level D
- Hard Hat
- Safety glasses
- Work clothes as prescribed by the weather.
- Steel toe and shank work boots.
- Hearing protection.

Modified Level D (same as Level D with):
- Disposable outer coveralls (chemical resistant).
- Stee toe and shank work boots, chemically resistant or used with disposable boot covers.
- Chemically protective (Nitrile) outer gloves.
- Surgical inner (Latex) gloves.

Level C (same as Modified Level D with):
- Full-face Air Purifying Respirator (APR) with combination organic vapor/HEPA cartridges.

Level B (same as Level C with):
- Positive Pressure Full-face Supplied Air SCBA or supplied air respirator with escape 5 minute SCBA.

1.13.2.2. Initial Minimum Levels of PPE by Task

Based on available information, the initial minimum protective equipment requirements for each major task and operation are listed below. Available site information shall be reviewed and the list of tasks and operations and these levels of protection shall be expanded and/or revised during preparation of the SSHP.

TASK/OPERATION	INITIAL LEVEL OF PROTECTION
Site Mobilization	Level D
Site Regrading	Level B
Excavation of Contaminated Soils	Level B
Handling Contaminated Water	Level C
Installing Perimeter Monitoring Probes	Modified Level D
Installing Landfill Gas Monitoring Probes	Modified Level D
Monitoring Well Installation	Modified Level D
Backfilling and Grading	Modified Level D
Demobilization	Level D

1.13.3. PPE for Contracting Officer Personnel

4 clean sets of personal protective equipment and clothing (excluding air-purifying negative-pressure respirators and safety shoes, which will be provided by individual visitors), as required for entry into the Exclusion Zone and/or Contamination Reduction Zone, shall be available for use by the Contracting Officer or official visitors. The items shall be cleaned and maintained by the Contractor and stored in the Contractor's trailer and clearly marked: "FOR USE BY CONTRACTING OFFICER ONLY." The Contractor shall provide basic training in the use and limitations of the PPE provided, and institute administrative controls to check prerequisites prior to issuance. Such prerequisites include meeting minimum training requirements for the work tasks to be performed and medical clearance for site hazards and respirator use.

1.14. MEDICAL SURVEILLANCE

The Safety and Health Manager, in conjunction with the Occupational Physician, shall detail, in the employer's Safety and Health Program and the SSHP, the medical surveillance program that includes scheduling of examinations, certification of fitness for duty, compliance with OSHA requirements, and information provided to the physician. Examinations shall be performed by or under the supervision of a licensed physician, preferably one knowledgeable in occupational medicine, and shall be provided without cost to the employee, without loss of pay and at a reasonable time and place. Medical surveillance protocols and examination and test results shall be reviewed by the Occupational Physician. The medical surveillance program shall contain the requirements specified below. Personnel working in contaminated areas of the site shall have been examined as prescribed in \-CFR 29 Part 1910-\ Section .120, and \-CFR 29 Part 1926-\ Section .65, and determined medically fit to perform their duties.

1.14.1. Frequency of Examinations

Employees shall have been provided with medical examinations as specified, within the past 12 months and shall receive exams annually thereafter (if contract duration exceeds 1 year); on termination of employment; reassignment in accordance with \-CFR 29 Part 1910-\ Section .120 (e)(3)(i)(C), and \-CFR 29 Part 1926-\ Section .65 (e)(3)(i)(C); if the employee develops signs or symptoms of illness related to workplace exposures; if the physician determines examinations need to be conducted more often than once a year; and when an employee develops a lost time injury or illness during the period of this contract. The supervisor

shall be provided with a written statement signed by the physician prior to allowing the employee to return to the work site after injury or illness resulting in a lost workday, as defined in \-CFR 29 Part 1904-\ Section .12 (f).

1.14.2. Content of Examinations

The following elements shall be included in the medical surveillance program. Additional elements may be included at the discretion of the occupational physician responsible for reviewing the medical surveillance protocols.

a. Complete medical and occupational history (initial exam only).

b. General physical examination of major organ systems.

c. Pulmonary function testing including FVC and FEV1.0.

d. CBC with differential.

e. Blood chemistry screening profile (e.g. SMAC 20/25).

f. Urinalysis with microscopic examination.

g. Audiometric testing (as required by Hearing Conservation Program).

h. Visual acuity.

i. Chest x-ray. (This test should be performed no more frequently than every 4 years, unless directed by Occupational Physician.)

j. Electrocardiogram (as directed by Occupational Physician).

k. Urine heavy metals (arsenic, cadmium, chromium, and mercury).

l. serum lead.

m. zinc protoporphyrin.

1.14.3. Information Provided to the Occupational Physician

The physician shall be furnished with the following:

a. Site information from paragraph, SITE DESCRIPTION AND CONTAMINATION CHARACTERIZATION.

b. information on the employee's anticipated or measured exposure.

c. a description of any PPE used or to be used.

d. A description of the employee's duties as they relate to the employee's exposures (including physical demands on the employee and heat/cold stress).

e. A copy of \-CFR 29 Part 1910-\ Section .120, or \-CFR 29 Part 1926-\ Section .65.

f. Information from previous examinations not readily available to the examining physician.

g. A copy of Section 5.0 of \-NIOSH Pub No. 85-115-\.

h. Information required by \-CFR 29 Part 1910-\ Section .134.

1.14.4. Physician's Written Opinion

Before work begins a copy of the physician's written opinion for each employee shall be obtained and furnished to the Safety and Health Manager; and the employee. The opinion shall address the employee's ability to perform hazardous remediation work and shall contain the following:

a. The physician's recommended limitations upon the employee's assigned work and/or PPE usage.

b. The physician's opinion about increased risk to the employee's health resulting from work; and

c. A statement that the employee has been informed and advised about the results of the examination.

1.14.5. Medical Records

Documentation of medical exams shall be provided as part of the Certificate of Worker or Visitor Acknowledgment. Medical records shall be maintained in accordance with \-CFR 29 Part 1910-\ Section .120, and \-CFR 29 Part 1926-\ Section .65.

1.15. NOT USED

1.16. EXPOSURE MONITORING/AIR SAMPLING PROGRAM

The Safety and Health Manager shall prepare and implement an exposure monitoring/air sampling program to identify and quantify safety and health hazards and airborne levels of hazardous substances in order to assure proper selection of engineering controls, work practices and personal protective equipment for affected site personnel. Minimum initial requirements for the program are delineated below. Available site information shall be reviewed and the exposure monitoring/air sampling program shall be expanded and/or revised for submittal as part of the SSHP.

1.16.1. Location. Monitoring/sampling shall be performed for employee(s) with the greatest potential for exposure (high risk employees) in all work zones (exclusion, contamination reduction, and support), in confined spaces, and at the site boundary for the purpose of controlling on-site operations. Action levels

for respiratory protection shall apply to persistent readings in the breathing zone of personnel conducting field construction/removal activities.

The Contractor shall conduct environmental monitoring as needed to ensure that the atmospheric hazard guidelines set forth in SSHP are not exceeded.

Initial Action Levels for inorganics. The Contractor shall first use engineering controls such as dust suppression, prior to PPE upgrades.

Total Dust < 5 mg/m^3* 19.5% < O_2 < 23.5% LEL $\leq$ 10%	Level D/Modified D PPE
10 mg/m^3 < Total Dust > 5 mg/m^3 19.5% < O_2 < 23.5% LEL $\leq$ 10%	Level C PPE
Total Dust > 10 mg/m^3 19.5% < O_2 < 23.5% LEL $\geq$ 10%	Level B PPE

* The action level for total dust is based upon one-half the OSHA PEL for total dust.

Initial Action Levels for Volatile Organic Compounds.

Level D/Modified D PPE

THC < 10 ppm above background or
Benzene < 0.5 ppm or
1,1,2-TCA < 5 ppm or
Vinyl Choride < 0.5 ppm or
19.5% < O_2 < 23.5% or
LEL $\leq$ 10%

Level C PPE

10 < THC > 100 ppm above background or
0.5 ppm $\leq$ Benzene < 5 ppm or
5 ppm $\leq$ 1,1,2-TCA < 50 ppm or
0.5 ppm < Vinyl Chloride < 5 ppm or
19.5% < O_2 < 23.5% or
LEL $\leq$ 10%

Level B PPE

THC $\geq$ 100 ppm above background or
Benzene $\geq$ 5 ppm or
1,1,2-TCA $\geq$ 50 ppm or
Vinyl Chloride $\geq$ 5 ppm or
19.5% < O_2 < 23.5% or
LEL $\leq$ 10%

1.16.2. Frequency and Duration. Frequency and duration of monitoring/sampling for background or baseline conditions and during general and specific site

operations shall be specified. Requirements for specific contaminants shall be addressed.

1.16.2.1. Background or baseline. Background air concentrations of volatile organic compounds and particulates shall be determined at a minimum three times a day: prior to the start of work each day, after lunch and at the end of the day's activities. Instrument readings shall be obtained at the site perimeter both downwind and upwind of the active work zone(s) and when the wind direction change is 90 degrees new instument readings shall be taken to document contribution of the site activities to air concentrations.

1.16.2.2. During Operations.

Initial frequency for monitoring for VOCs during use of intrusive activities such as site excavation, grading and hauling shall be at least once every 15 minutes. Monitoring for VOCs shall continue throughout activities which have the potential to produce volatile release.

Initial frequency and duration for air monitoring for explosive atmospheres and for oxygen, and in particular methane, in each active work zone shall be at least once every 15 minutes during site excavation activities and shall be continuous during confined space entry.

Real-time total particulate monitoring shall be required near the work zone during all earth-moving activities, including but not limited to, excavation, hauling and grading. Initial frequency shall be hourly.

1.16.3. Parameters

Concentrations of VOCs as expressed in PID meter units above background.

Concentrations of specific volatiles.

Levels of oxygen and explosive/flammable materials in the atmosphere -in particular the limit on the maximum allowable methane concentration should not exceed 25 percent of the LEL in open areas, and not to exceed 10 percent of the LEL in confined spaces.

Concentrations of total particulates.

1.16.4. Instruments and Equipment

The Contractor shall furnish and maintain, as a minimum, the following intrinsically-safe instruments and necessary calibration equipment for air monitoring during remediation activities:

Photo Ionization Detector/Flame Ionization Detector.

Combustible gas/Oxygen monitor.

Direct Reading Aerosol Monitor.

Colorimetric indicator tubes for specific compounds.
Instruments shall be protected from surface contamination during use to allow easy decontamination. All instrumentation shall be maintained and calibrated according to NIOSH analytical methods and/or manufacturers' recommendations. Such maintenance and calibration data shall be recorded and included in the project record documents. See Paragraph: Safety and Health Phase-Out Report. Calibration of all monitoring equipment and/or safety equipment will be performed at least three times a day; in the morning before work begins, after lunch and at the end of the day's activities.

1.16.5. Methods

The Contractor shall use real time monitors to sample breathing zone concentrations of contaminants to establish proper respirator and other PPE requirements and to document worker exposure.

1.16.6. Notification Procedures for BZ Monitoring Results

The CIH or SSHO shall immediately notify the Contractor and the CO/COR if any exposure exceeds the Action Levels set in the SSHP. The CIH or SSHO shall submit written reports of monitoring results to the Contractor and the CO within 3 working days of collection.

1.16.7. Sampling in Confined Spaces

The Contractor shall monitor for oxygen, explosive atmosphere, and toxic substances in confined spaces to determine respirator and ventilation requirements, if any, to ensure safe entry and occupancy (see Table 01110-1). The CIH or the SSHO shall follow these procedures for sampling confined spaces (as defined in 29 CFR 1910.146):

After sources of ignition and other contents of the confined space, where feasible, have been removed; after process lines leading to the confined space have been disconnected, blanked off, or valved off and locked; and after moving equipment that is part of the confined space is de-energized using lockout and tag-out procedures; trained and authorized employees are permitted to enter the confined space. Whenever possible, perform remote testing. If remote testing is not possible, the qualified person entering the space must wear respiratory equipment and other appropriate equipment approved for use in atmospheres immediately dangerous to life and health (see Paragraph 1.18.5 of this section). A qualified person shall test for oxygen, flammable gases, and contaminants using a calibrated direct reading instrument, after calibrating the instruments for use according to the manufacturer's instructions.

If testing indicates the presence of less than 19.5 or greater than 23.5 percent oxygen, more than 10 percent of the lower explosive limit (LEL), or other action levels in the SSHP, ventilate the confined space until testing shows the levels are within permissible limits. WARNING: The absence of an

oxygen deficient, an explosive, or a toxic atmosphere does not always indicate that the confined space is non-hazardous. The confined space may still contain vapors, liquids, gases, or solids of a toxic or corrosive nature. Continuous ventilation shall be maintained as long as the space is occupied.

If contaminant vapors are generated in the confined space, mechanical ventilation shall be provided to remove the vapors at the source and testing shall be repeated after ventilation is in use to establish that concentrations are within permissible limits. If mechanical ventilation does not control air contaminants to within the PEL's, employees must wear supplied air respirators.

1.16.8. Air Monitoring Documentation and Reporting

The Contractor shall maintain a complete chronological record for all air monitoring performed during construction. The record shall include the following documentation.

1.16.8.1. Calibration/Maintenance Record

A calibration/maintenance record form shall be filled out for each air monitoring/sampling instrument. The calibration/maintenance records shall be submitted to the CO/COR weekly as part of the Weekly Safety Reports. The calibration/maintenance records shall contain the following information:

Instrument brand, model, and identification number;

Date and time of calibration;

Targeted calibration point;

Pre- and post-sample calibration results;

Signature of calibrator.

1.16.8.2. Field Log

A field log shall be kept for all air monitoring and shall include:

Date sampled;

Locations;

Time and Temperature;

Wind Direction;

Sample identification number;

Type of sample;

Sampler's initials.

1.17. HEAT AND COLD STRESS MONITORING

The Safety and Health Manager shall develop a heat stress and cold stress monitoring program for onsite activities. Details of the monitoring program, including schedules for work and rest, and physiological monitoring requirements, shall be described in the SSHP. Personnel shall be trained to recognize the symptoms of heat and cold stress. The SSHO and an alternate person shall be designated, in writing, to be responsible for the heat and cold stress monitoring program.

1.17.1. Heat Stress

Physiological monitoring shall commence when the ambient temperature is above 70 degrees F. Monitoring frequency shall increase as the ambient temperature increases or as slow recovery rates are observed. An adequate supply of cool drinking water shall be provided for the workers. \-NIOSH Pub No. 85-115-\ may be consulted for guidance in determining protocols for prevention of heat stress.

1.17.2. Cold Stress

To guard against cold injury, appropriate clothing and warm shelter for rest periods shall be provided. Procedures to monitor and avoid cold stress shall be followed in accordance with the current TLVs for Cold Stress as recommended in \-ACGIH-02-\.

1.18. SAFETY PROCEDURES, ENGINEERING CONTROLS AND WORK PRACTICES

The SSHP shall describe the standard operating safety procedures, engineering controls and safe work practices to be implemented for the work covered. These shall include, but not be limited to, the following:

1.18.1. General Site Rules/Prohibitions

General site rules/prohibitions (buddy system, eating, drinking, and smoking restrictions, etc.).

1.18.2. Work Permit Requirements

Excavation, hot work, confined space, etc..

1.18.3. Material Handling Procedures

Soils, liquids.

1.18.3.1. Spill and Discharge Control

Written spill and discharge containment/control procedures shall be developed and implemented. These procedures shall address laboratory waste packs, drum and container handling, opening, sampling, shipping and transport. These procedures shall describe prevention measures, such as building berms or dikes; spill

control measures and material to be used (e.g. booms, vermiculite); location of the spill control material; personal protective equipment required to cleanup spills; disposal of contaminated material; and who is responsible to report the spill. Storage of contaminated material or hazardous materials shall be appropriately bermed, diked and/or contained to prevent any spillage of material on uncontaminated soil. If the spill or discharge is reportable, and/or human health or the environment are threatened, the National Response Center, the state, and the Contracting Officer shall be notified as soon as possible. Reporting requirements shall be in accordance with Section \=01600=\ PROJECT RECORD DOCUMENTS.

1.18.4. Drum and Container Handling

Procedures and Precautions (opening, sampling, overpacking).

1.18.5. Confined Space Entry Procedures

Personnel shall not be permitted to enter confined space as a part of this project at any time, until the provisions of \-29 CFR 1910-\ section .146 are satified.

1.18.6. Fire Protection and Prevention

1.18.7. Electrical Safety

1.18.8. Excavation and Trench Safety

1.18.9. Guarding of Machinery and Equipment

1.18.10. Lockout/Tagout

1.18.11. Fall Protection

1.18.12. Hazard Communication

1.18.13. Illumination

1.18.14. Sanitation

1.18.15. Engineering Controls

1.18.16. Process Safety Management

1.18.17. Signs and Labels

1.18.18. Waste Disposal

1.19. SITE CONTROL MEASURES

In order to prevent the spread of contamination and control the flow of personnel, vehicles, and materials into and out of work areas, site control measures shall be established and described in the SSHP. The SSHP shall describe

the methodology to be used by the Safety and Health Manager and SSHO in determining work zone designations and their modifications, and procedures to limit the spread of contamination. The SSHP shall include procedures for the implementation and enforcement of safety and health rules for all persons on the site, including employers, employees, outside Contractors, Contracting Officer representatives, and visitors.

1.19.1. *Work Zones*

Initial anticipated work zone boundaries are shown on the drawings. Utilizing this guidance, work zone boundaries (exclusion zone, including restricted and regulated areas; contamination reduction zone; and support zone) and access points shall be established and the boundary delineations shall be included on the drawings and in the SSHP. Delineation of work zone boundaries shall be based on the contamination characterization data and the hazard/risk analysis to be performed as described in paragraph: HAZARD/RISK ANALYSIS. As work progresses and field conditions are monitored, work zone boundaries may be modified with approval of the Contracting Officer. Work zones shall be clearly identified and marked in the field (using fences, tape, signs, etc.). A site map, showing work zone boundaries and locations of decontamination facilities, shall be posted in the onsite office. Work zones shall consist of the following:

a. Exclusion Zone (EZ): The exclusion zone is the area where hazardous contamination is either known or expected to occur and the greatest potential for exposure exists. Entry into this area shall be controlled and exit may only be made through the CRZ.

b. Contamination Reduction Zone (CRZ): The CRZ is the transition area between the Exclusion Zone and the Support Zone. The personnel and equipment decontamination areas shall be separate and unique areas located in the CRZ.

c. Support Zone (SZ): The Support Zone is defined as areas of the site, other than exclusion zones and contamination reduction zones, where workers do not have the potential to be exposed to hazardous substances or dangerous conditions resulting from hazardous waste operations. The Support Zone shall be secured against active or passive contamination. Site offices, parking areas, and other support facilities shall be located in the Support Zone.

1.19.2. *Site Control Log*

A log of personnel visiting, entering, or working on the site shall be maintained. The log shall include the following: date, name, agency or company, time entering and exiting site, time entering and exiting the exclusion zone (if applicable), and personal protective equipment utilized. Before visitors are allowed to enter the Contamination Reduction Zone or Exclusion Zone, they shall show proof of current training, medical surveillance and respirator fit testing (if respirators are required for the tasks to be performed) and shall fill out the Certificate of Worker or Visitor Acknowledgment. This visitor information, including date, shall be recorded in the log.

1.19.3. Communication

An employee alarm system that has adequate means of on and off site communication shall be provided and installed in accordance with \-CFR 29 Part 1910-\ Section .165. The means of communication shall be able to be perceived above ambient noise or light levels by employees in the affected portions of the workplace. The signals shall be distinctive and recognizable as messages to evacuate or to perform critical operations. This includes: air horn and/or walkie talkie and/or radio.

1.19.4. Site Security

The following site security shall be provided: Ensure employees use designated access points for movement of personnel and equipment between zones and on and off the site.

Signs shall be printed in bold large letters on contrasting backgrounds in English or where appropriate in the predominant language of workers unable to read English. Signs shall be visible from all points where entry might occur and at such distances from the restricted area that employees may read the signs and take necessary protective steps before entering.

1.20. PERSONAL HYGIENE AND DECONTAMINATION

Personnel entering the Exclusion or Contamination Reduction Zones or otherwise exposed or subject to exposure to hazardous chemical vapors, liquids, or contaminated solids shall adhere to the following personal hygiene and decontamination provisions. Decontamination shall be performed in the CRZ prior to entering the Support Zone from the Exclusion Zone. Chapter 10.0 of \-NIOSH Pub No. 85-115-\ shall be consulted when preparing decontamination procedures. A detailed discussion of personal hygiene and decontamination facilities and procedures to be followed by site workers shall be submitted as part of the SSHP. Employees shall be trained in the procedures and the procedures shall be enforced throughout site operations. Persons disregarding these provisions of the SSHP shall be barred from the site.

1.20.1. *Decontamination Facilities*\

The following facilities shall be provided:

A personnel decontamination facility in the CRZ. This facility shall be used by both Contractor personnel and Contracting Officer representatives. The decontamination facility shall provide for separation of street clothing and contaminated PPE and shall be equipped with hot and cold water, towels, soap in sufficient quantities for all anticipated personnel, and waste water storage facilities for controlling the disposal of used water. The Contractor shall also supply at least one toilet for employee usage during this project.

1.20.2. Procedures

Minimum decontamination procedures are listed below. Available site information shall be reviewed and these procedures shall be expanded and/or revised for submittal as part of the SSHP. Waste water generated at the personnel decontamination process shall be handled as specified in section \=01420=\

VEHICLE AND BULKY DEBRIS DECONTAMINATION. Disposable PPE shal be disposed of by the Contractor in accordance with State, Federal and local regulations.

1.21. EQUIPMENT DECONTAMINATION

Vehicles and equipment used in the EZ shall be decontaminated in the CRZ prior to leaving the site. The procedures for decontamination of vehicles and equipment shall be addressed in the SSHP. See Section \=01420=\ VEHICLE AND BULKY DEBRIS DECONTAMINATION.

1.21.1. *Decontamination Facilities*\

A vehicle/equipment decontamination station shall be provided within the CRZ for decontaminating vehicles and equipment leaving the EZ. The decontamination station is detailed in Section \=02513=\CONCRETE DECONTAMINATION PAD. and include high pressure, low volume, water wash area for equipment and vehicles. See section \=02513=\ CONCRETE DECONTAMINATION PAD.

1.21.2. Procedures

Procedures for equipment decontamination shall be developed and utilized to prevent the spread of contamination into the SZ and off-site areas. These procedures shall address disposal of contaminated products and spent materials used on the site, including containers, fluids, oils, etc. Any item taken into the EZ shall be assumed to be contaminated and shall be inspected and/or decontaminated before the item leaves the area. Vehicles, equipment, and materials shall be cleaned and decontaminated prior to leaving the site. Construction material shall be handled in such a way as to minimize the potential for contaminants being spread and/or carried offsite. Prior to exiting the site, vehicles and equipment shall be monitored to ensure the adequacy of decontamination.

1.22. EMERGENCY EQUIPMENT AND FIRST AID REQUIREMENTS

The SSHP shall describe the emergency and first aid equipment to be available onsite. The following items, as a minimum, shall be maintained onsite and available for immediate use:

a. First aid equipment and supplies approved by the consulting physician.

b. Emergency eyewashes and showers which comply with \-ANSI Z358.1-\.

c. Emergency-use respirators. For escape purposes, 5- to 15-minute emergency escape masks shall be supplied. For rescue purposes, 2 positive pressure self-contained breathing apparatus (SCBA) shall be supplied. These shall be dedicated for emergency use only and maintained onsite in the Contamination Reduction Zone.

d. Fire extinguishers with a minimum rating of 20-A:120-B:C shall be provided at site facilities and in all vehicles and at any other site locations where flammable or combustible materials present a fire risk.

1.23. EMERGENCY RESPONSE AND CONTINGENCY PROCEDURES

An Emergency Response Plan, that meets the requirements of \-CFR 29 Part 1910-\ Section .120 (l) and \-CFR 29 Part 1926-\ Section .65 (l), shall be developed and implemented as a section of the SSHP. In the event of any emergency associated with remedial action, the Contractor shall, without delay, alert all onsite employees that there is an emergency situation; take action to remove or otherwise minimize the cause of the emergency; alert the Contracting Officer; and institute measures necessary to prevent repetition of the conditions or actions leading to, or resulting in, the emergency. Employees that are required to respond to hazardous emergency situations shall be trained in how to respond to such expected emergencies. The plan shall be rehearsed regularly as part of the overall training program for site operations. The plan shall be reviewed periodically and revised as necessary to reflect new or changing site conditions or information. The following elements, as a minimum, shall be addressed in the plan:

a. Pre-emergency planning. The local emergency response agencies shall be contacted and met with during preparation of the Emergency Response Plan. Agencies to be contacted include local fire, police, and rescue authorities with jurisdiction and nearby medical facilities that may be utilized for emergency treatment of injured personnel. At these meetings, the agencies shall be notified of upcoming site activities and potential emergency situations. The response capabilities shall be ascertained and a response commitment obtained. The Contractor shall ensure the Emergency Response Plan for the site is compatible and integrated with the disaster, fire and/or emergency response plans of local, state, and Federal agencies.

b. Personnel roles, lines of authority, communications for emergencies.

c. Emergency recognition and prevention.

d. Site topography, layout, and prevailing weather conditions.

e. Criteria and procedures for site evacuation (emergency alerting procedures, employee alarm system, emergency PPE and equipment, safe distances, places of refuge, evacuation routes, site security and control).

f. Specific procedures for decontamination and medical treatment of injured personnel.

g. Route maps to nearest prenotified medical facility. Site-support vehicles shall be equipped with maps. At the beginning of project operations, drivers of the support vehicles shall become familiar with the emergency route and the travel time required.

h. Emergency alerting and response procedures including posted instructions and a list of names and telephone numbers of emergency contacts (physician, nearby medical facility, fire and police departments, ambulance service, Federal, state, and local environmental agencies; as well as Safety and Health Manager, the Site Superintendent, the Contracting Officer and/or their alternates).

i. Criteria for initiating community alert program, contacts, and responsibilities.

j. Procedures for reporting incidents to appropriate government agencies. In the event that an incident such as an explosion or fire, or a spill or release of toxic materials occurs during the course of the project, the appropriate government agencies shall be immediately notified. In addition, the Contracting Officer shall be verbally notified immediately and receive a written notification within 24 hours. The report shall include the following items:

(1) Name, organization, telephone number, and location of the Contractor.

(2) Name and title of the person(s) reporting.

(3) Date and time of the incident.

(4) Location of the incident, i.e., site location, facility name.

(5) Brief summary of the incident giving pertinent details including type of operation ongoing at the time of the incident.

(6) Cause of the incident, if known.

(7) Casualties (fatalities, disabling injuries).

(8) Details of any existing chemical hazard or contamination.

(9) Estimated property damage, if applicable.

(10) Nature of damage, effect on contract schedule.

(11) Action taken to ensure safety and security.

(12) Other damage or injuries sustained, public or private.

k. Procedures for critique of emergency responses and follow-up.

1.24. CERTIFICATE OF WORKER/VISITOR ACKNOWLEDGEMENT

A copy of a Contractor-generated certificate of worker/visitor acknowledgement shall be completed and submitted for each visitor allowed to enter contamination reduction or exclusion zones, and for each employee, following the example certificate at the end of this section.

1.25. INSPECTIONS

The SSHO shall perform daily inspections of the jobsite and the work in progress to ensure compliance with 29 CFR 1910.120, the Safety and Health Program, the SSHP and other occupational health and safety requirements of the contract, and to determine the effectiveness of the SSHP. Procedures for correcting deficiencies (including actions, timetable and responsibilities) shall be

described in the SSHP. Follow-up inspections to ensure correction of deficiencies shall be conducted and documented. Daily safety inspection logs shall be used to document the inspections, noting safety and health deficiencies, deficiencies in the effectiveness of the SSHP, and corrective actions taken. The SSHO's Daily Inspection Logs shall be attached to and submitted with the Daily Quality Control reports. Each entry shall include the following: date, work area checked, employees present in work area, PPE and work equipment being used in each area, special safety and health issues and notes, and signature of preparer. In the event of an accident, the Contracting Officer shall be notified according to 29 CFR 1910.120.

1.26. SAFETY AND HEALTH PHASE-OUT REPORT

A Safety and Health Phase-Out Report shall be submitted within 10 working days following completion of the work, prior to final acceptance of the work. The following minimum information shall be included:

a. Summary of the overall performance of safety and health (accidents or incidents including near misses, unusual events, lessons learned, etc.).

b. Final decontamination documentation including procedures and techniques used to decontaminate equipment, vehicles, and onsite facilities.

c. Summary of exposure monitoring and air sampling accomplished during the project.

d. Signatures of Safety and Health Manager and SSHO.

EXAMPLE CERTIFICATE OF WORKER/VISITOR ACKNOWLEDGMENT

PROJECT NAME CONTRACT NO.
PROJECT ADDRESS
CONTRACTOR'S NAME
EMPLOYEE'S/VISITOR'S NAME

The contract for the above project requires the following: that you be provided with and complete formal and site-specific training; that you be supplied with proper personal protective equipment including respirators; that you be trained in its use; and that you receive a medical examination to evaluate your physical capacity to perform your assigned work tasks, under the environmental conditions expected, while wearing the required personal protective equipment. These things are to be done at no cost to you. By signing this certification, you are acknowledging that your employer has met these obligations to you.

I HAVE READ, UNDERSTAND AND AGREE TO FOLLOW THE SITE SAFETY AND HEALTH PLAN FOR THIS SITE.

Name Date

--- ---

FORMAL TRAINING: I have completed the following formal training courses that meet OSHA's requirements:

Date Completed

40 hour: ....._____
8 hour supervisory:....._____
8 hour refresher:....._____

SITE-SPECIFIC TRAINING: I have been provided and have completed the site-specific training required by this Contract. The Site Safety and Health Officer conducted the training. _____

RESPIRATORY PROTECTION: I have been trained in accordance with the criteria in the Contractor's/my Employer's Respiratory Protection program. I have been trained in the proper work procedures and use and limitations of the respirator(s) I will wear. I have been trained in and will abide by the facial hair policy. _____

RESPIRATOR FIT-TEST TRAINING: I have been trained in the proper selection, fit, use, care, cleaning, and maintenance, and storage of the respirator(s) that I will wear. I have been fit-tested in accordance with the criteria in the Contractor's/my employer's Respiratory Program and have received a satisfactory fit. I have been assigned my individual respirator. I have been taught how to properly perform positive and negative pressure fit-check upon donning negative pressure respirators each time._____

MEDICAL EXAMINATION: I have had a medical examination within the last twelve months which was paid for by my employer. The examination included: health history, pulmonary function tests and may have included an evaluation of a chest x-ray. A physician made determination regarding my physical capacity to perform work tasks on the project while wearing protective equipment including a respirator. I was personally provided a copy and informed of the results of that examination. My employer's industrial hygienist evaluated the medical certification provided by the physician and checked the appropriate blank below. The physician determined that there:

were no limitations to performing the required work tasks;

were identified physical limitations to performing the required work tasks.

Date medical exam completed

Employee's/Visitor's Signature _____
Date _____

Printed Name _____

Social Security Number _____

Contractor's Site Safety and Health Officer Signature_____
Date _____

Printed Name _____

Social Security Number _____

TABLE 01110-1 VOLATILE RESPONSE CRITERIA

TOTAL HYDROCARBON (THC) CONCENTRATION USING PID and COLORIMETRIC TUBES	SAMPLE FREQUENCY	ACTION TAKEN**
THC < 10 ppm above background or Benzene < .5 ppm or 1,1,2-TCA < 5 ppm	At least every 15 minutes and when a change in operations occurs or at least every 30 min. Or when requested by workers involved in operations.	o Level D protection
10 ppm ≤ THC < 100 ppm above background or .5 ppm ≤ Benzene < 5 ppm or 5 ppm ≤ 1,1,2-TCA < 50 ppm	At least every 15 minutes and when a change in operations occurs or when requested by workers involved in operations	o Level C protection
100 ppm above background ≤ THC or Benzene ≥ 5 ppm or 1,12-TCA ≥ 50 ppm	Continuous	o Stop work operations

**Based on an Action Level of 10 ppm for Carbon Disulfide (PEL of 10 ppm)

TABLE 01110-2. ATMOSPHERIC HAZARD GUIDELINES

Monitoring Equipment	Hazard	Ambient Level	Action
Combustible gas indicator	Explosive atmosphere	< 5% (LEL)	Continue investigation with caution.
		5% - 10%	Continue on-site monitoring with caution as higher levels encountered.
		10% LEL	Potential explosion hazard; withdraw from area immediately.
Oxygen meter	Oxygen	<19.5%	Monitor wearing SCBA. Note: Combustible gas readings are not valid in atmospheres with <19.5% oxygen.
		19.5%-23.5%	Continue investigation with caution. SCBA not needed, based on oxygen content only.
		≥23.5%	Discontinue inspection; fire hazard potential. Consult specialist ist.
Real-Time Aerosol Monitor		< 1.5 mg/m³	Continue Work
and control		≥ 1.5 mg/m³	Evaluate Exposure need for Dust

TABLE 01110-3. OSHA RECORDS

	Section of 29 CFR	Period Maintained	Content
OSHA			
1. Occupational Injuries and Illnesses	1904	5 years	Information needed to complete the log (OSHA No. 200) and the supplementary record (OSHA No.101)
2. Training			
Hazardous Waste Operations	1926.65	Current	Written certification
3. Exposure Measurements			
Hazardous Waste Operations	1910.20 (d)(ii)	30 years	Not specified
4. Medical Surveillance			
Hazardous Waste Operations	1910.120 (f)(8)	30 years	Not specified

Table 01110 - 4 Himco VOCs' Results

Compound	Subsurface Soil (ug/Kg)	Deep Groundwater (ug/L)	Shallow Groundwater (ug/L)	Leachate (ug/L)	Surface Soil (ug/Kg)
Acetone	15 - 120	270	9 J - 240	85 - 1,300	8 BJ - 140
Benzene			0.9 J - 3	32 J - 97 J	
2-Butanone		0.7 J - 1 J	0.7 J	13 - 420	2 J - 8
Bromodichloromethane		0.7 J - 2 J			
Chlorobenzene			0.9 J		
Carbon Disulfide		0.013		4 J - 130	0.8 J
Chloroethane		12	2 J	3 BJ	
Chloroform		3 J - 4 J	1 J	76 J	
1,1-Dichloroethane			3 J	5 J - 220	
1,1-Dichloroethene	5 J - 12				5 J
1,2-Dichloroethene (total)			5 J - 6 J	66 - 410	
Dibromochloromethane		1 J			
Ethyl Benzene				0.15 - 6,400 **mg/L**	0.7 J - 2 J
Methylene Chloride	4 J	16 J	1 BJ - 19 J	18 - 550	3 J - 16
Styrene				3 J	0.8 J
Tetrachloroethene		0.6 J		48 J	6 J

1,1,1-Trichloroethane			0.8 J - 8	520	
Trichloroethene		2 J	2 J - 42	11 - 550 J	0.9 J - 4 J
Toluene	4 J	0.6 J		0.063 - 480,000 mg/L	2 J - 31
Xylenes (total)				77 J - 44,000 mg/L	0.7 J - 6
Vinyl Chloride				16 - 47 J	
DDT					12 - 64
DDE					4.1

J= Estimated Concentration
B= Also Detected in Blank

Table 01110 - 5 Himco - SVOCs' Results

Compound	Subsurface Soil (ug/kg)	Deep Groundwater (ug/L)	Shallow Groundwater (ug/L)	Leachate (ug/L)	Surface Soil (ug/Kg)
Naphthalene				4 J - 45 J	18 J
2-Methylnapthalene				10 J - 440 J	18 J
Dimethylphthalate		7 - 9			41 J
1,4-Dichlorobenzene	75 J - 120 J				120 J -210 J
Benzoic Acid				9 J	75 J
Acenaphthene				1 J	59 J -310 J
Dibenzofuran					23 J
Fluorene					43 J - 120 J
Phenanthrene				2 J	42 J -1,500
Anthracene					82 J-240 J
Di-n-butylphthalate					92 J-490 J
Fluoranthene				7 J	17 J-2,800
Pyrene				8 J	34 J-2,000
Butylbenzylpthalate			11		300 J
Benzo(a)anthracene					25 J-1,300
Chrysene				5 J	37 J-1,600
bis(2-Ethylhexyl)phthalate		3.0	8.6	22 J - 180 J	18 J-7,800 J

Benzo(b)fluoranthene				6 J	67 J-3,200
Benzo(k)fluoranthene				3 J	82 J-1,700
Benzo(a)pyrene				5 J	430 J-2,200
Indeno(1,2,3-cd)pyrene				2 J	230 J-3,700
Dibenzo(a,h)anthracene					94 J-550 J
Benzo(g,h,i)perylene				2 J	250 J-3,500
Di-n-octylphthalate			8		
Carbazole					36 J
Diethylphthalate		36 - 38	2	49 J	

J= estimated value

Table 01110 - 6 Himco - Inorganics and Nitrate/Nitrite Results				
Compound	Surface Soils (mg/Kg)	Leachate (mg/L)	Deep Groundwater (ug/L)	Shallow Wells (ug/L)
Aluminum		8.47 J - 356 N	138 B - 6,980	23.6(B) - 113,000
Antimony	3.1 BJ - 46.8	0.0726 J - 10.5	34.6 - 47	31.2(B) - 62.5
Arsenic	0.47 B - 5.8	0.019	4.7 B - 11.7	1.0(B) - 54.5
Barium		0.53 J - 4.7 B	100 B - 222	6.4(B) - 510
Beryllium	0.2 BJ - 0.91 BJ	1.5 BNJ* - 5.7 NJ*	2.1 BJ - 4.5 BJ	1.2(B) - 5.4
Calcium		0.55 - 288	44,400 - 145,000	14,100 - 217,000
Chromium	1.1 B - 13.2	0.0329 - 10 BNJ	4.3 - 23.8	4.3(BJ) - 354
Cobalt		3.3 BJ	5.2 B - 7.3 B	5.7(B) - 28.6(B)
Copper	1.3 B - 216	0.626 - 11.7 BJ	4.9 BJ - 10.7 BJ	3.7(B) - 139
Iron	9.8 BJ - 10,100	17.5 - 272	62 BJ - 7,890	56.5(BJ) - 39,300
Lead	0.5 BJ - 245 J	.505 J -28.3	1.8 BJ - 11.2 J	1.1(BJ) - 106(J)
Magnesium	14.6 BJ - 14,000	60.3 - 205 J*	17,200 - 50,400	2,650(B) - 41,700
Manganese	1.3 BJ - 561 J	3.15 - 9.6 B	18.2 J - 279	3.7(B) - 2,070
Mercury	0.13 J - 0.54 J	0.0013 J - 0.42 NJ	0.20	0.20(J) - 1.0(J)
Nickel		0.055	21.1 B	79.4 - 111
Potassium		27.2	758 B - 29,300	468(B) - 12,900

Selenium			2 B - 3.4 B	2.1(B) - 33.0
Silver			7.2 BJ - 12.4 J	6.9(B) - 18.4(J)
Sodium		83.4 - 415	2,960 B- 91,000	1,850(B) - 78,800
Vanadium		0.0321 B - 4.5 BNJ	7.5 B- 14.1 BJ	4.5(BJ) - 106
Zinc	1.7 B - 229	0.713 J - 18.4	4.9 BJ - 538 J	6.1(BJ) - 390(J)
Cyanide	1.3 - 24.3	0.108 - 48.4		
Nitrate/Nitrite			0.15 - 0.48 **mg/L**	0.14 - 1.76 **mg/L**

B= reported value is less than the contract required detection limit, but greater than the instrument detection limit
J= estimated value
N= spike sample recovery not within control limits
*= duplicate analysis not within control limits

Table 01110 - 7 Himco - Pesticides' Results	
Compound	Leachate (ug/L)
Aldrin	0.12 DJP - 0.13 DJP
alpha-BHC	0.017 DJ
beta-BHC	0.068 DJP - 0.097 DJP
alpha-Chlordane	0.22 DJP
gamma-Chlordane	0.028 DJP - 0.029 DJP
Dieldrin	0.073 DJP
DDT	0.29 DJP
Endosulfan II	0.048 DJP - 0.17 DJP
Heptachlor	0.023 DJP - 0.12 DJP

D= all compounds identified in an analysis at a secondary dilution factor
J= estimated value
P= pesticide/aroclor target analyte when there is greater than 25% difference between two gas chromatograph columns

Table 01110 - 8 Himco Waste Mass Gas - VOCs' Data	
Compound	Range of Concentrations Detected (mg/L)
Methyl Chloride	0.00110
Vinyl Chloride	0.00860
Methylene Chloride	0.00008
Acetone	0.00003
Carbon Disulfide	0.00030
1,1-Dichloroethene	0.00009
1,1-Dichloroethane	0.00015
1,2-Dichloroethene - TOTAL	0.00130
1,1,1-Trichloroethane	0.00030
Trichloroethene	0.00037
Benzene	0.00014
Tetrachloroethene	0.00140
Toluene	0.00060
Ethyl Benzene	0.00070
Styrene	0.00001
Xylenes	0.00130
TOTAL	0.01646

Table 01110 - 9 1995 Groundwater - VOCs' Results	
Compound	Range of Concentrations (ug/L)
Acetone	7 J
Benzene	1 J - 15 J
Bromodichloromethane	2 J - 7 J
Carbon Disulfide	0.7 J - 2 J
Chloroethane	6 J - 7 J
Chloroform	16 - 47
1,1-Dichloroethane	1 J - 7 J
1,2-Dichloroethene	1 J
Dichloropropane	1 J
Methylene Chloride	0.7 J - 9 J
Trichloroethene	0.8 J - 0.9 J

J= estimated value

Table 01110 - 10 1995 Groundwater - SVOCs' Results	
Compound	Range of Concentrations (ug/L)
Acenaphthene	3 J
Anthracene	0.3 J
Bis(2-Ethylhexyl)phthalate	13
Carbazole	6 J
Dibenzofuran	2 J
Diethylphthalate	11
Fluorene	3 J
2-Methylnaphthalene	0.5 J
Naphthalene	0.4 J
Phenanthrene	0.2 J - 0.3 J

J= estimated value

Table 01110 - 11 1995 Groundwater - Metals' Results	
Compound	Range of Concentrations (ug/L)
Arsenic	18.5 - 23.3
Barium	237 - 347
Chromium	14.4
Cyanide	11.4

J= estimated value

SECTION 01300

SUBMITTAL PROCEDURES
12/94

ATTACHMENTS: Submittal Register (ENG Form 4288)

INDEX

PART 1	GENERAL
1.1	CONTRACTOR RESPONSIBILITIES
1.2	SUBMITTAL DESCRIPTIONS
1.3	SUBMITTAL CLASSIFICATION
PART 2	PRODUCTS (Not Applicable)
PART 3	EXECUTION
3.1	GENERAL
3.2	SUBMITTAL REGISTER (ENG FORM 4288)
3.3	SCHEDULING
3.4	NOT USED
3.5	SUBMITTAL PROCEDURE
3.6	CONTROL OF SUBMITTALS
3.7	SUPERVISING CONTRACTOR APPROVED SUBMITTALS
3.8	NOT USED
3.9	STAMPS

SECTION 01300

SUBMITTAL PROCEDURES
12/94

ATTACHMENTS: Submittal Register (ENG Form 4288)

PART 1. GENERAL

This section of specifications supplements any requirments required by the Contracting Officer. Reference in the Technical Specificiations to "Contracting Officer" shall be construed to mean the "Owner's Designated Construction Management Representative."

1.1. CONTRACTOR RESPONSIBILITIES

The Contractor is responsible for total management of his work including scheduling, control, and certification of all submittals. The submittal management system provided in these specifications is intended to be a complete system for the Contractor to use to control the quality of materials, equipment and workmanship provided by manufacturers, fabricators, suppliers and subcontractors. The Contractor shall review each submittal for contract compliance. Submittals that do not conform will be returned to the originator to be corrected. The Submittal Register (ENG Form 4283) will be utilized to log and monitor all submittal activities. No construction or installation activities shall be performed prior to required approvals of applicable submittals. The Contractor shall perform a check to assure that all materials and/or equipment have been tested, submitted and approved during the preparatory phase of quality control inspections.

1.2. SUBMITTAL DESCRIPTIONS

Definitions of submittals used in specifications are as follows:

SD-01 Data\

Submittals which provide calculations, descriptions, or documentation regarding the work.

SD-04 Drawings\

Submittals which graphically show relationship of various components of the work, schematic diagrams of systems, details of fabrication, layouts of particular elements, connections, and other relational aspects of the work.

SD-06 Instructions\

Preprinted material describing installation of a product, system or material, including special notices and material safety data sheets, if any, concerning impedances, hazards, and safety precautions.

SD-07 Schedules\

Tabular lists showing location, features, or other pertinent information regarding products, materials, equipment, or components to be used in the work.

SD-08 Statements\

A document, required of the Contractor, or through the Contractor, from a supplier, installer, manufacturer, or other lower tier Contractor, the purpose of which is to confirm the quality or orderly progression of a portion of the work by documenting procedures, acceptability of methods or personnel, qualifications, or other verifications of quality.

SD-09 Reports\

Reports of inspections or tests, including analysis and interpretation of test results. Each report shall be properly identified. Test methods used shall be identified and test results shall be recorded.

SD-13 Certificates\

Statement signed by an official authorized to certify on behalf of the manufacturer of a product, system or material, attesting that the product, system or material meets specified requirements. The statement must be dated after the award of this contract, must state the Contractor's name and address, must name the project and location, and must list the specific requirements which are being certified.

SD-14 Samples\

Samples, including both fabricated and unfabricated physical examples of materials, products, and units of work as complete units or as portions of units of work.

SD-18 Records\

Documentation to record compliance with technical or administrative requirements.

SD-19 Operation and Maintenance Manuals\

Data which forms a part of an operation and maintenance manual.

1.3. SUBMITTAL CLASSIFICATION

Submittals are classified as follows:

1.3.1. GA Submittals

All submittals noted in the technical specifications and Submittal Register as "GA", "GA1" or GA2" are subject to approval by the Contracting Officer.

1.3.2. Information Only

All submittals not to be approved by the Contracting Officer will be for information only.

PART 2. PRODUCTS (Not Applicable)

PART 3. EXECUTION

3.1. GENERAL

The Contractor shall submit all items listed on the Submittal Register (ENG Form 4288) or as required by the specifications. Reference to "Government Action" shall be mean "Contracting Officer Action". Units of weights and measures used on all submittals shall be the same as those used in the contract drawings. Submittals shall be made in the respective number of copies and to the respective addresses set forth below. Each submittal shall be complete and in sufficient detail to allow ready determination of compliance with contract requirements. Prior to submittal, all items shall be checked and approved by the Contractor's Quality Control (CQC) representative. Proposed deviations from the contract requirements shall be clearly identified. Submittals shall include items such as: Contractor's, manufacturer's, or fabricator's drawings; descriptive literature including (but not limited to) catalog cuts, diagrams, operating charts or curves; test reports; test cylinders; samples; O&M manuals (including parts list); certifications; warranties; and other such required submittals. Submittals requiring approval shall be scheduled and made prior to the acquisition of the material or equipment covered thereby. Samples remaining upon completion of the work shall be picked up and disposed of in accordance with manufacturer's Material Safety Data Sheets (MSDS) and in compliance with existing laws and regulations.

3.2. SUBMITTAL REGISTER (ENG FORM 4288)

At the end of this section is one set of ENG Form 4288 listing items of equipment and materials for which submittals are required by the specifications; this list may not be all inclusive and additional submittals may be required.

3.3. SCHEDULING

Submittals covering component items forming a system or items that are interrelated shall be scheduled to be coordinated and submitted concurrently. Certifications to be submitted with the pertinent drawings shall be so scheduled.

3.4. NOT USED

3.5. SUBMITTAL PROCEDURE

Submittals shall be made as follows:

3.5.1. Procedures

3.5.1.1. GA Submittals

Submittals for approval shall be reviewed by a liscensed professional engineer in the the appropriate discipline. All items listed as GA, GA1 or GA2 submittals in the various sections or on the Submittal Register shall be mailed directly to the addressee shown below as directed.

Technical Reviewer

Contracting Officer to be supplied by the Owner

Each required submittal which is in the form of a drawing shall be submitted as one (1) reproducible and one (1) print of the drawing. Drawing prints shall be either blue or black line permanent-type prints on a white background or blueprint. Reproducibles shall be brownline diazo or sepia and shall be of such quality that prints made therefrom are sufficiently clear for microfilm copying.

All catalog and descriptive data shall be submitted in the number of copies as directed by the Contracting Officer. Catalog cuts and other descriptive data which have more than one model, size, or type or which shows optional equipment shall be clearly marked to show the model, size, or type and all optional equipment which is proposed for approval. Submittals on component items forming a system or that are interrelated shall be submitted at one time as a single submittal in order to demonstrate that the items have been properly coordinated and will function as a unit.

3.5.1.2. "FIO" Submittals

Except as noted below, data for all items listed as "FIO" in the various sections shall be submitted in the number of copies as directed by the Contracting Officer using the transmittal form.

3.5.1.3. Certificates of Compliance

Each certificate shall be signed by an official authorized to certify in behalf of the manufacturing company and shall contain the name and address of the Contractor, the project name and location, and the quantity and date or dates of shipment or delivery to which the certificates apply. Copies of laboratory test reports submitted with certificates shall contain the name and address of the testing laboratory and the date or dates of the tests to which the report applies. Certification shall not be construed as relieving the Contractor from furnishing satisfactory material, if, after tests are performed on selected samples, the material is found not to meet the specific requirements.

3.5.1.4. NOT USED

3.5.1.5. Operation and Maintenance Instructions and/or Manuals
Where required by various technical sections, operations and maintenance instructions and/or manuals with parts lists included shall be provided by the Contractor and shall be assembled in three-ring binders with index and tabbed section divider and having a cover indicating the contents by equipment or system name and project title and shall be submitted for approval 90 days prior to final tests of mechanical and electrical systems, unless otherwise specified. Each operation and maintenance manual shall contain a copy of all warranties . If field testing requires these copies to be revised, they shall be updated and resubmitted for approval within 10 calendar days after completion of tests.

3.5.2. NOT USED

3.6. CONTROL OF SUBMITTALS
The Contractor shall carefully control his procurement operations to ensure that each individual submittal is made on or before the Contractor scheduled submittal date.

3.7. CONTRACTING OFFICERAPPROVED SUBMITTALS
Upon completion of review of submittals requiring approval, the submittals will be identified as having received approval by being so stamped and dated.

3.8. NOT USED

3.9. STAMPS
Stamps used by the Contractor on the submittal data to certify that the submittal meets contract requirements shall be similar to the following:

CONTRACTOR

(Firm Name)

_____ Approved

_____ Approved with corrections as noted on submittal data and/or attached sheets(s).

SIGNATURE: _____

TITLE: _____

DATE: _____

SUBMITTAL REGISTER

SPECIFICATION SECTION

TITLE AND LOCATION

HIMCO DUMP SUPERFUND SITE FNL LNDFL CLSR ELKHART, IN

CONTRACTOR

CONTRACT NUMBER

ACTIVITY No a	TRANSMITTAL No b	ITEM No c	SPECIFICATION PARAGRAPH NUMBER d	DESCRIPTION OF ITEM SUBMITTED e thru n	CLASSIFICATION * o thru q	CONTRACTOR SCHEDULE DATES: SUBMIT r	APPROVAL NEEDED BY s	MATERIAL NEEDED BY t	CONTRACTOR ACTION: CODE u	DATE v	SUBMIT TO GOVERNMENT w	GOVERNMENT ACTION: CODE x	DATE y	REMARKS z
			01110	**SD-04 Drawings**										
			1.3.,	Work Zones	FIO									
			1.19.1.											
			1.3.,	Decontamination Facilities	FIO									
			1.20.1.,											
			1.21.1.											
			01110	**SD-09 Reports**										
			1.3.	Monitoring/Sampling Results	FIO									
			1.3.,	Site control log	FIO									
			1.19.2.											
			01402	**SD-01 Data**										
			1.3., 3.2.	Sampling and Analysis Plan	GA									
				(SAP)										
			01402	**SD-18 Records**										
			1.3., 3.3.	Laboratory Quality Management	FIO									
				Manual										
			01420	**SD-01 Data**										
			2.	Vehicle and Bulky Debris	GA									
				Decontamination Plan (VBDDP)										
			01430	**SD-01 Data**										
			1.3., 1.5.	Environmental Protection Plan	GA									

* Classification: GA: Con. Officer Apprvd, GA1: Con. Officer Apprvd, FIO: For Information Only

ENG FORM 4288-E, Mar 95 (Revised Sep 95)

SUBMITTAL REGISTER

SPECIFICATION SECTION

TITLE AND LOCATION
HIMCO DUMP SUPERFUND SITE FNL LNDFL CLSR ELKHART, IN

CONTRACTOR

CONTRACT NUMBER

ACTIVITY No a	TRANSMITTAL No b	ITEM No c	SPECIFICATION PARAGRAPH NUMBER d	DESCRIPTION OF ITEM SUBMITTED e thru n	CLASSIFICATION * o thru q	CONTRACTOR SCHEDULE DATES: SUBMIT r	APPROVAL NEEDED BY s	MATERIAL NEEDED BY t	CONTRACTOR ACTION: CODE u	DATE v	SUBMIT TO GOVERNMENT w	GOVERNMENT ACTION: CODE x	DATE y	REMARKS z
			01460	**SD-01 Data**										
			4.	Site Security Plan	FIO									
			01500	**SD-08 Statements**										
			1.3.	Personnel Decontamination	GA									
				Facility Location										
			1.3.	Personnel Decontamination	GA									
				Wastewater Plan										
			1.3.	Vehicle & Bulky Debris	GA									
				Decontamination Wastewater										
				Plan										
			01510	**SD-01 Data**										
			1.3.,	Supporting Documentation	GA									
			3.3.5.1.											
			1.3.,	CADD Files	GA									
			3.3.5.3.											
			1.3.,	Coordinate Listing	GA									
			3.1.2.4.,											
			3.3.5.4.											
			1.3.,	Reference Ties	GA									
			3.1.2.5.,											
			3.3.5.5.											

* Classification: GA: Con. Officer Apprvd, GA1: Con. Officer Apprvd, FIO: For Information Only

ENG FORM 4288-E, Mar 95 (Revised Sep 95)

SUBMITTAL REGISTER

SPECIFICATION SECTION

TITLE AND LOCATION
HIMCO DUMP SUPERFUND SITE FNL LNDFL CLSR ELKHART, IN

CONTRACTOR

CONTRACT NUMBER

ACTIVITY No a	TRANSMITTAL No b	ITEM No c	SPECIFICATION PARAGRAPH NUMBER d	DESCRIPTION OF ITEM SUBMITTED e thru n	CLASSIFICATION * o thru q	CONTRACTOR SCHEDULE DATES: SUBMIT r	CONTRACTOR SCHEDULE DATES: APPROVAL NEEDED BY s	CONTRACTOR SCHEDULE DATES: MATERIAL NEEDED BY t	CONTRACTOR ACTION: CODE u	CONTRACTOR ACTION: DATE v	CONTRACTOR ACTION: SUBMIT TO GOVERNMENT w	GOVERNMENT ACTION: CODE x	GOVERNMENT ACTION: DATE y	REMARKS z
			01510	**SD-01 Data (Continued)**										
			1.3.	As-Built Coordinates for	GA									
				Piping Systems										
			01510	**SD-04 Drawings**										
			1.3.,	Map Sheets	GA									
			3.3.5.2.											
			01520	**SD-18 Records**										
			2.	Prints with original negatives	FIO									
			2.	35 mm color slides	FIO									
			01570	**SD-01 Data**										
			1.1., 1.3.	Disposal plan	GA									
			01600	**SD-18 Records**										
			2.	Record Documents	GA									
			01730	**SD-19 Operation and Maintenance Manuals**										
			1.2.	Format and Outline	GA									
			1.2.	Draft Copies	GA									
			1.2.	Draft Manual for Review	GA									
			1.2.	Final Manual	GA									
			01800	**SD-09 Reports**										
			3.	Inspection Reports	FIO									

* Classification: GA: Con. Officer Apprvd, GA1: Con. Officer Apprvd, FIO: For Information Only

ENG FORM 4288-E, Mar 95 (Revised Sep 95)

SUBMITTAL REGISTER

SPECIFICATION SECTION

TITLE AND LOCATION
HIMCO DUMP SUPERFUND SITE FNL LNDFL CLSR ELKHART, IN

CONTRACTOR

CONTRACT NUMBER

ACTIVITY No a	TRANSMITTAL No b	ITEM No c	SPECIFICATION PARAGRAPH NUMBER d	DESCRIPTION OF ITEM SUBMITTED e thru n	CLASSIFICATION * o thru q	CONTRACTOR SCHEDULE DATES: SUBMIT r	APPROVAL NEEDED BY s	MATERIAL NEEDED BY t	CONTRACTOR ACTION: CODE u	DATE v	SUBMIT TO GOVERNMENT w	GOVERNMENT ACTION: CODE x	DATE y	REMARKS z
			02210	**SD-01 Data**										
			1.5., 3.2.	Disposal Facility	GA									
			02210	**SD-08 Statements**										
			1.5., 3.10.	Field Testing Control	FIO									
			02210	**SD-09 Reports**										
			1.4.1.,	Suitable Materials	FIO									
			1.5.											
			1.5., 3.10.	Field Testing Control	FIO									
			02211	**SD-08 Statements**										
			1.4., 1.5.	Qualifications	GA									
			1.4., 3.3.	Equipment	GA									
			02211	**SD-09 Reports**										
			1.4.,	Classification Testing	GA									
			2.1.2.											
			1.4.,	Chemical Quality Testing	GA									
			2.1.3.											
			1.4., 3.4.,	Landfill Excavation and	GA									
			3.4.1.,	Regrading Plan										
			3.4.2											
			1.4.,	Inspection Trench Logs	FIO									
			3.4.2.											

* Classification: GA: Con. Officer Apprvd, GA1: Con. Officer Apprvd, FIO: For Information Only

ENG FORM 4288-E, Mar 95 (Revised Sep 95)

SUBMITTAL REGISTER

SPECIFICATION SECTION

TITLE AND LOCATION
HIMCO DUMP SUPERFUND SITE FNL LNDFL CLSR ELKHART, IN

CONTRACTOR

CONTRACT NUMBER

ACTIVITY No a	TRANSMITTAL No b	ITEM No c	SPECIFICATION PARAGRAPH NUMBER d	DESCRIPTION OF ITEM SUBMITTED e thru n	CLASSIFICATION * o thru q	CONTRACTOR SCHEDULE DATES: SUBMIT r	APPROVAL NEEDED BY s	MATERIAL NEEDED BY t	CONTRACTOR ACTION: CODE u	DATE v	SUBMIT TO GOVERNMENT w	GOVERNMENT ACTION: CODE x	DATE y	REMARKS z
			02211	**SD-09 Reports (Continued)**										
			1.4., 3.8.	Field Testing Control	GA									
			02221	**SD-08 Statements**										
			5.1., 10.	GALVANIZED STEEL WIRE MESH	FIO									
				GABIONS										
			10.	TESTS AND SERVICE RECORDS OF	FIO									
				STONE										
			02221	**SD-13 Certificates**										
			5.3., 10.	ACCEPTANCE REQUIREMENTS	FIO									
			02221	**SD-14 Samples**										
			5.2.1., 10.	Stone Quality	FIO									
			02222	**SD-09 Reports**										
			1.4.,	Field Density Tests	GA									
			3.4.3.											
			1.4.,	Testing of Backfill Materials	FIO									
			3.4.2.											
			02223	**SD-04 Drawings**										
			1.4., 3.4.	Finished Grades	GA									
			02223	**SD-08 Statements**										
			1.3., 1.4.	EQUIPMENT	GA									
			1.4., 1.5.	Qualifications	GA									

* Classification: GA: Con. Officer Apprvd, GA1: Con. Officer Apprvd, FIO: For Information Only

ENG FORM 4288-E, Mar 95 (Revised Sep 95)

SUBMITTAL REGISTER

SPECIFICATION SECTION

TITLE AND LOCATION
HIMCO DUMP SUPERFUND SITE FNL LNDFL CLSR ELKHART, IN

CONTRACTOR

CONTRACT NUMBER

ACTIVITY No. a	TRANSMITTAL No b	ITEM No c	SPECIFICATION PARAGRAPH NUMBER d	DESCRIPTION OF ITEM SUBMITTED e thru n	CLASSIFICATION * o thru q	CONTRACTOR SCHEDULE DATES: SUBMIT r	APPROVAL NEEDED BY s	MATERIAL NEEDED BY t	CONTRACTOR ACTION: CODE u	DATE v	SUBMIT TO GOVERNMENT w	GOVERNMENT ACTION: CODE x	DATE y	REMARKS z
			02223	**SD-09 Reports**										
			1.4.,	Chemical Quality Testing	GA									
			3.3.2.											
			1.4.,	Classification Determinations	GA									
			3.3.3.											
			1.4.,	Other Tests	GA									
			3.3.4.											
			02252	**SD-01 Data**										
			1.4., 3.2.	Landfill Gas Extraction Well	GA									
				Installation										
			02252	**SD-04 Drawings**										
			1.4.,	Installation Diagrams	FIO									
			3.2.4.											
			1.4.,	Wellhead Completion Equipment	GA									
			2.1.7.											
			1.4.,	Manholes and Vaults	GA									
			2.1.6.											
			02252	**SD-08 Statements**										
			1.3., 1.4.	QUALIFICATIONS	FIO									
			1.4.	Drilling Method	FIO									

* Classification: GA: Con. Officer Apprvd, GA1: Con. Officer Apprvd, FIO: For Information Only

ENG FORM 4288-E, Mar 95 (Revised Sep 95)

SUBMITTAL REGISTER

SPECIFICATION SECTION

TITLE AND LOCATION
HIMCO DUMP SUPERFUND SITE FNL LNDFL CLSR ELKHART, IN

CONTRACTOR

CONTRACT NUMBER

ACTIVITY No a	TRANSMITTAL No. b	ITEM No c	SPECIFICATION PARAGRAPH NUMBER d	DESCRIPTION OF ITEM SUBMITTED e thru n	CLASSIFICATION * o thru q	CONTRACTOR SCHEDULE DATES: SUBMIT r	APPROVAL NEEDED BY s	MATERIAL NEEDED BY t	CONTRACTOR ACTION: CODE u	DATE v	SUBMIT TO GOVERNMENT w	GOVERNMENT ACTION: CODE x	DATE y	REMARKS z
			02252	**SD-09 Reports**										
			1.4.,	Granular Filter Pack	FIO									
			3.5.1.											
			1.4.	Testing of Backfill Materials	GA									
			02253	**SD-01 Data**										
			4.1., 5.	INSTALLATION DIAGRAMS	FIO									
			5., 6.3.	Granular Filter Pack	FIO									
			02271	**SD-01 Data**										
			1.5.,	Raw Materials	GA									
			2.1.1.											
			1.5.,	Sheet Materials	GA									
			2.1.2.											
			02271	**SD-04 Drawings**										
			1.5.,	Layout and Detail Drawings	GA									
			2.1.3.											
			1.5., 3.6.	As-built Drawings	GA									
			02271	**SD-06 Instructions**										
			1.5., 2.2.	Tests, Inspections, and	GA									
				Verifications										
			1.5., 3.3.	Field Seaming	GA									

* Classification: GA: Con. Officer Apprvd, GA1: Con. Officer Apprvd, FIO: For Information Only

ENG FORM 4288-E, Mar 95 (Revised Sep 95)

SUBMITTAL REGISTER

SPECIFICATION SECTION

TITLE AND LOCATION
HIMCO DUMP SUPERFUND SITE FNL LNDFL CLSR ELKHART, IN

CONTRACTOR

CONTRACT NUMBER

ACTIVITY No. a	TRANSMITTAL No b	ITEM No c	SPECIFICATION PARAGRAPH NUMBER d	DESCRIPTION OF ITEM SUBMITTED e thru n	CLASSIFICATION * o thru q	CONTRACTOR SCHEDULE DATES: SUBMIT r	APPROVAL NEEDED BY s	MATERIAL NEEDED BY t	CONTRACTOR ACTION: CODE u	DATE v	SUBMIT TO GOVERNMENT w	GOVERNMENT ACTION: CODE x	DATE y	REMARKS z
			02271	**SD-08 Statements**										
			1.4., 1.5.	QUALIFICATIONS	GA									
			02271	**SD-09 Reports**										
			1.5.,	Interface Direct Shear Testing	GA									
			2.2.1.											
			1.5.,	Non-Destructive Field Seam	GA									
			3.3.3.1.	Testing										
			1.5.,	Destructive Field Seam Testing	GA									
			3.3.3.2.											
			1.5.,	Destructive Seam Test Repairs	GA									
			3.3.4.1.											
			02273	**SD-01 Data**										
			1.2., 2.3.	Bond Properties	GA									
			02273	**SD-06 Instructions**										
			1.2., 2.4.	Sampling and Testing	GA									
			1.2., 3.3.	Penetrations	GA									
			02273	**SD-08 Statements**										
			1.2., 1.3.	Qualifications	GA									
			02273	**SD-09 Reports**										
			1.2., 2.1.	Geonet	GA									
			1.2.	Geotextile	GA									

* Classification: GA: Con. Officer Apprvd, GA1: Con. Officer Apprvd, FIO: For Information Only

ENG FORM 4288-E, Mar 95 (Revised Sep 95)

SUBMITTAL REGISTER

SPECIFICATION SECTION

TITLE AND LOCATION
HIMCO DUMP SUPERFUND SITE FNL LNDFL CLSR ELKHART, IN

CONTRACTOR

CONTRACT NUMBER

ACTIVITY No. a	TRANSMITTAL No b	ITEM No c	SPECIFICATION PARAGRAPH NUMBER d	DESCRIPTION OF ITEM SUBMITTED e thru n	CLASSIFICATION * o thru q	CONTRACTOR SCHEDULE DATES: SUBMIT r	APPROVAL NEEDED BY s	MATERIAL NEEDED BY t	CONTRACTOR ACTION: CODE u	DATE v	SUBMIT TO GOVERNMENT w	GOVERNMENT ACTION: CODE x	DATE y	REMARKS z
			02273	**SD-14 Samples**										
			1.2.,	Overlap and Fasteners	GA									
			3.1.2.1.											
			02442	**SD-01 Data**										
			1.2., 2.2.	GCL Properties	GA									
			02442	**SD-04 Drawings**										
			1.2.	Layout and Detail Drawings	GA									
			02442	**SD-06 Instructions**										
			1.2., 3.1.	Tests, Inspections, and	GA									
				Verifications										
			02442	**SD-08 Statements**										
			1.2., 1.3.	Qualifications	GA									
			02442	**SD-09 Reports**										
			1.2., 3.1.	Tests, Inspections, and	GA									
				Verifications										
			1.2.,	Interface Direct Shear Testing	GA									
			3.1.1.											
			1.2., 3.2.	Site Verification Sampling and	GA									
				Testing										
			02513	**SD-04 Drawings**										
			1.2., 1.4.	Alternate Design	GA									

* Classification: GA: Con. Officer Apprvd, GA1: Con. Officer Apprvd, FIO: For Information Only

ENG FORM 4288-E, Mar 95 (Revised Sep 95)

SUBMITTAL REGISTER

SPECIFICATION SECTION

TITLE AND LOCATION
HIMCO DUMP SUPERFUND SITE FNL LNDFL CLSR ELKHART, IN

CONTRACTOR

CONTRACT NUMBER

ACTIVITY No a	TRANSMITTAL No b	ITEM No c	SPECIFICATION PARAGRAPH NUMBER d	DESCRIPTION OF ITEM SUBMITTED e thru n	CLASSIFICATION * o thru q	CONTRACTOR SCHEDULE DATES: SUBMIT r	CONTRACTOR SCHEDULE DATES: APPROVAL NEEDED BY s	CONTRACTOR SCHEDULE DATES: MATERIAL NEEDED BY t	CONTRACTOR ACTION: CODE u	CONTRACTOR ACTION: DATE v	CONTRACTOR ACTION: SUBMIT TO GOVERNMENT w	GOVERNMENT ACTION: CODE x	GOVERNMENT ACTION: DATE y	REMARKS z
			02513	**SD-09 Reports**										
			1.2.	Mix Design and Test Results	GA									
			02513	**SD-13 Certificates**										
			1.2.	Cementitious Materials	FIO									
			1.2.	Admixtures	FIO									
			1.2.	Curing Materials	FIO									
			1.2.	Reinforcement	FIO									
			02552	**SD-09 Reports**										
			4.2.,	Portland Cement Concrete	GA									
			6.10.1.											
			4.2., 6.11.	Moisture-Density Relationships	GA									
			4.2., 6.4.	Bituminous Surface Course	GA									
			4.2., 6.7.	Aggregate Base Course	GA									
			4.2., 6.8.	Aggregate Subbase Course	GA									
			4.2., 6.9.	Aggregate Surfacing Course	GA									
			02552	**SD-13 Certificates**										
			4.2., 6.5.	Certified Refinery Analysis	GA									
			4.2.,	Certified Mill Certificate	GA									
			6.10.1.											
			4.2.,	Joint Materials	GA									
			6.10.1.											

* Classification: GA: Con. Officer Apprvd, GA1: Con. Officer Apprvd, FIO: For Information Only

SUBMITTAL REGISTER

SPECIFICATION SECTION

TITLE AND LOCATION
HIMCO DUMP SUPERFUND SITE FNL LNDFL CLSR ELKHART, IN

CONTRACTOR

CONTRACT NUMBER

ACTIVITY No a	TRANSMITTAL No b	ITEM No c	SPECIFICATION PARAGRAPH NUMBER d	DESCRIPTION OF ITEM SUBMITTED e thru n	CLASSIFICATION * o thru q	CONTRACTOR SCHEDULE DATES: SUBMIT r	APPROVAL NEEDED BY s	MATERIAL NEEDED BY t	CONTRACTOR ACTION: CODE u	DATE v	SUBMIT TO GOVERNMENT w	GOVERNMENT ACTION: CODE x	DATE y	REMARKS z
			02720	**SD-06 Instructions**										
			1.3., 3.3.	Placing Pipe	FIO									
			02720	**SD-13 Certificates**										
			1.3., 2.1.	Pipe For Culverts and Storm	FIO									
				Drains										
			1.3., 2.7.	Hydrostatic Test on Watertight	FIO									
				Joints										
			1.3.,	Frame and Cover or Gratings	FIO									
			2.4.3.											
			1.3.,	Precast Manhole Concrete Flat	FIO									
			2.3.1.	Tops										
			02730	**SD-09 Reports**										
			5.1., 11.	PLASTIC PIPE	FIO									
			11.	Granular Subdrain Material	FIO									
			02831	**SD-13 Certificates**										
			1.2.	Chain Link Fence	FIO									
			02910	**SD-08 Statements**										
			5.	Drilling and Installation Plan	GA									
			5.	Permits	GA									
			5.	Monitoring well geologic logs	GA									
			5.	Monitoring well installation	GA									

* Classification: GA: Con. Officer Apprvd, GA1: Con. Officer Apprvd, FIO: For Information Only

ENG FORM 4288-E, Mar 95 (Revised Sep 95)

SUBMITTAL REGISTER

SPECIFICATION SECTION

TITLE AND LOCATION
HIMCO DUMP SUPERFUND SITE FNL LNDFL CLSR ELKHART, IN

CONTRACTOR

CONTRACT NUMBER

ACTIVITY No a	TRANSMITTAL No b	ITEM No c	SPECIFICATION PARAGRAPH NUMBER d	DESCRIPTION OF ITEM SUBMITTED e thru n	CLASSIFICATION * o thru q	CONTRACTOR SCHEDULE DATES: SUBMIT r	CONTRACTOR SCHEDULE DATES: APPROVAL NEEDED BY s	CONTRACTOR SCHEDULE DATES: MATERIAL NEEDED BY t	CONTRACTOR ACTION: CODE u	CONTRACTOR ACTION: DATE v	CONTRACTOR ACTION: SUBMIT TO GOVERNMENT w	GOVERNMENT ACTION: CODE x	GOVERNMENT ACTION: DATE y	REMARKS z
			02910	**SD-08 Statements (Continued)**										
				diagrams										
			5.	Field note book	GA									
			5.	Monitoring well development	GA									
				records										
			5.	Gradation analysis of filter	GA									
				pack										
			5.	Photographs of final	GA									
				development water										
			5.	Catalog data	FIO									
			02915	**SD-09 Reports**										
			3., 6.	Reports and documentation	FIO									
				required by state and local										
				regulatory auth										
			3., 6.	Report of Well Abandonment	GA									
			3.	Well Abandonment Diagram	GA									
			02935	**SD-01 Data**										
			1.3.,	Erosion Control Material	GA									
			2.1.6.											
			1.3.,	Equipment	GA									
			3.3.2.											

* Classification: GA: Con. Officer Apprvd, GA1: Con. Officer Apprvd, FIO: For Information Only

SUBMITTAL REGISTER

SPECIFICATION SECTION

TITLE AND LOCATION
HIMCO DUMP SUPERFUND SITE FNL LNDFL CLSR ELKHART, IN

CONTRACTOR

CONTRACT NUMBER

ACTIVITY No a	TRANSMITTAL No b	ITEM No c	SPECIFICATION PARAGRAPH NUMBER d	DESCRIPTION OF ITEM SUBMITTED e thru n	CLASSIFICATION * o thru q	CONTRACTOR SCHEDULE DATES: SUBMIT r	APPROVAL NEEDED BY s	MATERIAL NEEDED BY t	CONTRACTOR ACTION: CODE u	DATE v	SUBMIT TO GOVERNMENT w	GOVERNMENT ACTION: CODE x	DATE y	REMARKS z
			02935	**SD-07 Schedules**										
			1.3.,	Delivery	FIO									
			1.4.1.											
			02935	**SD-08 Statements**										
			1.3.,	Maintenance Report	FIO									
			3.8.2.4.											
			1.3., 3.8.	Turf Establishment Period	FIO									
			1.3., 3.5.	Application of Pesticide	GA									
			02935	**SD-13 Certificates**										
			1.3.,	Seed	GA									
			2.1.1.											
			1.3.,	Fertilizer	GA									
			2.1.2.1.											
			1.3.	Pesticide	GA									
			1.3.,	Soil Test	GA									
			3.2.4.1.											
			03300A	**SD-13 Certificates**										
			1.2.	Cementitious Materials	GA									
			05120	**SD-04 Drawings**										
			1.3., 2.1.	Structural Steel Systems	GA									
			1.3.	Structural Connections	GA									

* Classification: GA: Con. Officer Apprvd, GA1: Con. Officer Apprvd, FIO: For Information Only

SUBMITTAL REGISTER

SPECIFICATION SECTION

TITLE AND LOCATION
HIMCO DUMP SUPERFUND SITE FNL LNDFL CLSR ELKHART, IN

CONTRACTOR

CONTRACT NUMBER

ACTIVITY No a	TRANSMITTAL No b	ITEM No c	SPECIFICATION PARAGRAPH NUMBER d	DESCRIPTION OF ITEM SUBMITTED e thru n	CLASSIFICATION * o thru q	CONTRACTOR SCHEDULE DATES: SUBMIT r	CONTRACTOR SCHEDULE DATES: APPROVAL NEEDED BY s	CONTRACTOR SCHEDULE DATES: MATERIAL NEEDED BY t	CONTRACTOR ACTION: CODE u	CONTRACTOR ACTION: DATE v	CONTRACTOR ACTION: SUBMIT TO GOVERNMENT w	GOVERNMENT ACTION: CODE x	GOVERNMENT ACTION: DATE y	REMARKS z
			05120	**SD-08 Statements**										
			1.3., 3.2.	Erection	FIO									
			05120	**SD-13 Certificates**										
			1.3.	Materials and Welders	FIO									
			1.3., 3.1.	Fabrication	FIO									
			1.3.	Shop Paint	FIO									
			05210	**SD-04 Drawings**										
			1.2.	Steel Joists	GA									
			05210	**SD-13 Certificates**										
			1.2.	Steel Joists	GA									
			05300	**SD-01 Data**										
			1.2., 2.1.	Deck Units	GA									
			05300	**SD-04 Drawings**										
			1.2., 2.1.	Deck Units	GA									
			1.2., 3.3.	Attachments	GA									
			05300	**SD-13 Certificates**										
			1.2., 2.1.	Deck Units	GA									
			1.2., 3.3.	Attachments	GA									
			05300	**SD-18 Records**										
			1.2., 3.3.	Attachments	GA									

* Classification: GA: Con. Officer Apprvd, GA1: Con. Officer Apprvd, FIO: For Information Only

ENG FORM 4288-E, Mar 95 (Revised Sep 95)

SUBMITTAL REGISTER

SPECIFICATION SECTION

TITLE AND LOCATION
HIMCO DUMP SUPERFUND SITE FNL LNDFL CLSR ELKHART, IN

CONTRACTOR

CONTRACT NUMBER

ACTIVITY No. a	TRANSMITTAL No b	ITEM No c	SPECIFICATION PARAGRAPH NUMBER d	DESCRIPTION OF ITEM SUBMITTED e thru n	CLASSIFICATION * o thru q	CONTRACTOR SCHEDULE DATES: SUBMIT r	CONTRACTOR SCHEDULE DATES: APPROVAL NEEDED BY s	CONTRACTOR SCHEDULE DATES: MATERIAL NEEDED BY t	CONTRACTOR ACTION: CODE u	CONTRACTOR ACTION: DATE v	CONTRACTOR ACTION: SUBMIT TO GOVERNMENT w	GOVERNMENT ACTION: CODE x	GOVERNMENT ACTION: DATE y	REMARKS z
			07413	**SD-04 Drawings**										
			1.3.	Metal Roofing	GA									
			07413	**SD-13 Certificates**										
			1.3., 2.1.	Roof Panels	GA									
			1.3., 3.1.	Installation	GA									
			1.3., 2.3.	Accessories	GA									
			07413	**SD-14 Samples**										
			1.3., 2.3.	Accessories	FIO									
			09900	**SD-01 Data**										
			1.2., 2.1.	Paint	FIO									
			09900	**SD-06 Instructions**										
			1.2., 3.3.	Mixing and Thinning	FIO									
			1.2., 3.4.	Application	FIO									
			09900	**SD-09 Reports**										
			1.2., 2.1.	Paint	FIO									
			09900	**SD-13 Certificates**										
			1.2.,	Lead	FIO									
			2.1.3.											
			1.2.,	Volatile Organic Compound	FIO									
			2.1.5.	(VOC) Content										
			1.2., 2.1.	Paint	GA									

* Classification: GA: Con. Officer Apprvd, GA1: Con. Officer Apprvd, FIO: For Information Only

SUBMITTAL REGISTER

SPECIFICATION SECTION

TITLE AND LOCATION
HIMCO DUMP SUPERFUND SITE FNL LNDFL CLSR ELKHART, IN

CONTRACTOR

CONTRACT NUMBER

ACTIVITY No a	TRANSMITTAL No b	ITEM No c	SPECIFICATION PARAGRAPH NUMBER d	DESCRIPTION OF ITEM SUBMITTED e thru n	CLASSIFICATION * o thru q	CONTRACTOR SCHEDULE DATES: SUBMIT r	CONTRACTOR SCHEDULE DATES: APPROVAL NEEDED BY s	CONTRACTOR SCHEDULE DATES: MATERIAL NEEDED BY t	CONTRACTOR ACTION: CODE u	CONTRACTOR ACTION: DATE v	CONTRACTOR ACTION: SUBMIT TO GOVERNMENT w	GOVERNMENT ACTION: CODE x	GOVERNMENT ACTION: DATE y	REMARKS z
			09900	**SD-13 Certificates (Continued)**										
			1.2.	Paint Chip Samples	GA									
			11240	**SD-01 Data**										
			1.4.	Spare Parts Data	FIO									
			1.4.	Activated Carbon Adsorption	GA1									
				Units										
			1.4.	Activated Carbon	GA									
			1.4.	Adsorption Battery Components	FIO									
			11240	**SD-04 Drawings**										
			1.4.	Shop Drawings	GA									
			11240	**SD-09 Reports**										
			1.4.	Performance Test Reports	GA									
			11240	**SD-13 Certificates**										
			1.4.	Activated Carbon	FIO									
			1.4.	Equipment	FIO									
			1.4.	Motors	FIO									
			11240	**SD-14 Samples**										
			1.4.	Special Tools	GA									
			11240	**SD-19 Operation and Maintenance Manuals**										
			1.4.	Operating Instructions	GA									
			1.4.	Maintenance Instructions	GA									

* Classification: GA: Con. Officer Apprvd, GA1: Con. Officer Apprvd, FIO: For Information Only

SUBMITTAL REGISTER

SPECIFICATION SECTION

TITLE AND LOCATION
HIMCO DUMP SUPERFUND SITE FNL LNDFL CLSR ELKHART, IN

CONTRACTOR

CONTRACT NUMBER

ACTIVITY No a	TRANSMITTAL No b	ITEM No c	SPECIFICATION PARAGRAPH NUMBER d	DESCRIPTION OF ITEM SUBMITTED e thru n	CLASSIFICATION * o thru q	CONTRACTOR SCHEDULE DATES: SUBMIT r	APPROVAL NEEDED BY s	MATERIAL NEEDED BY t	CONTRACTOR ACTION: CODE u	DATE v	SUBMIT TO GOVERNMENT w	GOVERNMENT ACTION: CODE x	DATE y	REMARKS z
			11240	**SD-19 Operation and Maint(Continued)**										
			1.4.	Framed Instructions	GA									
			11241	**SD-01 Data**										
			1.3.	Spare Parts Data	FIO									
			11241	**SD-04 Drawings**										
			1.3.	Shop Drawings	GA									
			11241	**SD-09 Reports**										
			1.3.	Performance Test Reports	GA									
			11241	**SD-13 Certificates**										
			1.3.	Granular Activated Carbon	GA									
				Certifications										
			11241	**SD-14 Samples**										
			1.3.	Special Tools	GA									
			11241	**SD-19 Operation and Maintenance Manuals**										
			1.3.	Operating Instructions	GA									
			1.3.	Maintenance Instructions	GA									
			1.3.	Framed Instructions	GA									
			11373	**SD-01 Data**										
			3., 6.1.	Blowers	GA									
			3., 6.2.	Aftercoolers	GA									
			3.	Controls	GA									

* Classification: GA: Con. Officer Apprvd, GA1: Con. Officer Apprvd, FIO: For Information Only

SUBMITTAL REGISTER

SPECIFICATION SECTION

TITLE AND LOCATION
HIMCO DUMP SUPERFUND SITE FNL LNDFL CLSR ELKHART, IN

CONTRACTOR

CONTRACT NUMBER

ACTIVITY No a	TRANSMITTAL No b	ITEM No c	SPECIFICATION PARAGRAPH NUMBER d	DESCRIPTION OF ITEM SUBMITTED e thru n	CLASSIFICATION * o thru q	CONTRACTOR SCHEDULE DATES: SUBMIT r	APPROVAL NEEDED BY s	MATERIAL NEEDED BY t	CONTRACTOR ACTION: CODE u	DATE v	SUBMIT TO GOVERNMENT w	GOVERNMENT ACTION: CODE x	DATE y	REMARKS z
			11373	**SD-04 Drawings**										
			3.	Controls	GA									
			11373	**SD-19 Operation and Maintenance Manuals**										
			3., 6.1.	Blowers	GA									
			3., 6.2.	Aftercoolers	GA									
			3.	Controls	GA									
			13570	**SD-01 Data**										
			2.	Flame Arrestor	GA									
			2.	Inlet Valve	GA									
			2.	Automatic Controls	GA									
			13570	**SD-04 Drawings**										
			2.	Flare System	GA									
			13570	**SD-09 Reports**										
			2.	Test Reports	GA									
			13570	**SD-19 Operation and Maintenance Manuals**										
			2.	Flare and associated equipment	GA									
				and accessories										
			15250	**SD-01 Data**										
			1.4.	Adhesives	GA									
			1.4.	Contact Adhesive	GA									
			1.4.	Jackets	GA									

* Classification: GA: Con. Officer Apprvd, GA1: Con. Officer Apprvd, FIO: For Information Only

ENG FORM 4288-E, Mar 95 (Revised Sep 95)

SUBMITTAL REGISTER

SPECIFICATION SECTION

TITLE AND LOCATION
HIMCO DUMP SUPERFUND SITE FNL LNDFL CLSR ELKHART, IN

CONTRACTOR

CONTRACT NUMBER

ACTIVITY No a	TRANSMITTAL No b	ITEM No c	SPECIFICATION PARAGRAPH NUMBER d	DESCRIPTION OF ITEM SUBMITTED e thru n	CLASSIFICATION * o thru q	CONTRACTOR SCHEDULE DATES: SUBMIT r	APPROVAL NEEDED BY s	MATERIAL NEEDED BY t	CONTRACTOR ACTION: CODE u	DATE v	SUBMIT TO GOVERNMENT w	GOVERNMENT ACTION: CODE x	DATE y	REMARKS z
			15250	**SD-01 Data (Continued)**										
			1.4.	Vapor Barrier Coating	GA									
			1.4.	Pipe Insulation Materials	GA									
			1.4.	Duct Insulation Materials	GA									
			1.4.	Equipment Insulation Materials	GA									
			15250	**SD-14 Samples**										
			1.4.	Thermal Insulation Materials	GA									
			15250	**SD-18 Records**										
			1.4.	Thermal Insulation Materials	GA									
			15350	**SD-01 Data**										
			3.	Names and Identification	GA									
				Symbols of Qualified Welders										
			3.	Storage Tanks Description,	GA									
				Supplier Information, & Pad										
			3.	Operating and Maintenance	GA									
				Instructions										
			15350	**SD-08 Statements**										
			3.	Welding Procedures	GA									
			15370	**SD-01 Data**										
			3.	Detailed isometric pipe system	GA									
				layout										

* Classification: GA: Con. Officer Apprvd, GA1: Con. Officer Apprvd, FIO: For Information Only

ENG FORM 4288-E, Mar 95 (Revised Sep 95)

SUBMITTAL REGISTER

SPECIFICATION SECTION

TITLE AND LOCATION
HIMCO DUMP SUPERFUND SITE FNL LNDFL CLSR ELKHART, IN

CONTRACTOR

CONTRACT NUMBER

ACTIVITY No a	TRANSMITTAL No b	ITEM No c	SPECIFICATION PARAGRAPH NUMBER d	DESCRIPTION OF ITEM SUBMITTED e thru n	CLASSIFICATION * o thru q	CONTRACTOR SCHEDULE DATES: SUBMIT r	APPROVAL NEEDED BY s	MATERIAL NEEDED BY t	CONTRACTOR ACTION: CODE u	DATE v	SUBMIT TO GOVERNMENT w	GOVERNMENT ACTION: CODE x	DATE y	REMARKS z
			15370	**SD-01 Data (Continued)**										
			3., 5.2.	Equipment	GA									
			3.	Condensate tank	GA									
			15370	**SD-04 Drawings**										
			3.	As-built drawings for all	GA									
				piping systems										
			3., 18.	Condensate tanks	GA									
			15370	**SD-13 Certificates**										
			3.	Valves, Fittings, hangers, and	GA									
				materials										
			16415	**SD-01 Data**										
			1.4.	Equipment and Devices for	GA									
				Other Than General Purpose										
				Areas										
			1.4.,	MOTOR CONTROL	GA									
			3.15.,											
			3.23.1.											
			1.4., 3.21.	AUTOMATIC TELEPHONE DIALER	GA									
			1.4.,	TRANSFORMERS	GA									
			2.1.29.,											
			3.17.											

* Classification: GA: Con. Officer Apprvd, GA1: Con. Officer Apprvd, FIO: For Information Only

ENG FORM 4288-E, Mar 95 (Revised Sep 95)

SUBMITTAL REGISTER

SPECIFICATION SECTION

TITLE AND LOCATION

HIMCO DUMP SUPERFUND SITE FNL LNDFL CLSR ELKHART, IN

CONTRACTOR

CONTRACT NUMBER

ACTIVITY No a	TRANSMITTAL No b	ITEM No c	SPECIFICATION PARAGRAPH NUMBER d	DESCRIPTION OF ITEM SUBMITTED e thru n	CLASSIFICATION * o thru q	CONTRACTOR SCHEDULE DATES: SUBMIT r	APPROVAL NEEDED BY s	MATERIAL NEEDED BY t	CONTRACTOR ACTION: CODE u	DATE v	SUBMIT TO GOVERNMENT w	GOVERNMENT ACTION: CODE x	DATE y	REMARKS z
			16415	**SD-01 Data (Continued)**										
			1.4.,	Heat Tape	GA									
			2.1.32.,											
			3.22.											
			1.4.,	Standard Lighting Fixtures	GA									
			2.1.15.											
			16415	**SD-04 Drawings**										
			1.4.	Supplementary Contractor's	GA									
				Drawings										
			16415	**SD-07 Schedules**										
			1.4.	List of Equipment and	FIO									
				Materials										
			16415	**SD-13 Certificates**										
			1.4.	Certificates of Compliance	GA									
			16415	**SD-19 Operation and Maintenance Manuals**										
			1.4.	Operation and Maintenance	GA									
				Manuals										

* Classification: GA: Con. Officer Apprvd, GA1: Con. Officer Apprvd, FIO: For Information Only

ENG FORM 4288-E, Mar 95 (Revised Sep 95)

SECTION 01402

CHEMICAL QUALITY MANAGEMENT

INDEX

PART 1
1.1. GENERAL
1.2. REGULATORY REQUIREMENTS AND APPLICABLE PUBLICATIONS.
1.3. SUBMITTALS.

PART 2 PRODUCTS (Not Applicable)

PART 3 EXECUTION
3.1. SITE MONITORING
3.2. SAMPLING AND ANALYSIS PLAN (SAP).
3.3. LABORATORY QUALITY MANAGEMENT MANUAL.

SECTION 01402

CHEMICAL QUALITY MANAGEMENT

PART 1.

1.1. GENERAL

1.1.1. SUMMARY

This section covers the specifications for routine sample collection, handling, monitoring, and analysis requirements established to ensure compliance with environmental regulations and all requirements for the Operational & Maintainance of the landfill off gas treatment system at the Himco Superfund Dumpsite. This treatment system consists of a Vapor Phase Adsorption System and a flare system. In conjunction with the Vapor Phase Adsorption System is the installation of a 15,000 gallon temporary UST for condensate collection.
The specifications also cover the sampling and analysis of a number of wells. This information shall be used by the Contractor as guidance in the development of a Sampling and Analysis Plan (SAP) which is to be part of the Operational & Maintainance Manual (O&M Manual). The SAP of the O & M Manual is to assure that the chemical data collected during this project are scientifically and legally defensible.

1.2. REGULATORY REQUIREMENTS AND APPLICABLE PUBLICATIONS.

The following listed publications form a part of this specification and where conflicts arise between regulatory requirements, the most restrictive requirements shall be followed.

1.2.1. EPA Methods of Organic Chemical Analysis of Municipal and Industrial Wastewater, EPA-600/4-82-057, July 1982.

1.2.2. EPA SW-846, Test Methods for Evaluating Solid Waste Physical/Chemical Methods, 3rd Edition, Final Update III, December 1996.

1.2.3. EPA Requirements for Quality Assurance Project Plans for Environmental Data Operations, EPA QA/R-5, Interim Final, August 1994.

1.2.4. Data Quality Objectives Process for Superfund, Interim Final Guidance, EPA540-R-93-071, September 1993.

1.2.5. EPA 40 CFR Part 261 Identification and Listing of Hazardous Waste

6. EPA 40 CFR Part 60 Vol. II Subchapter C- Air Programs

1.3. SUBMITTALS.

Contracting Officer approval is required for submittals with a "GA" designation; submittals having an "FIO" designation are for information only. The following shall be submitted in accordance with SECTION \=01300=\ SUBMITTAL PROCEDURES:

SD-01 Data\

Sampling and Analysis Plan (SAP)\; *GA*\.
(or workplan)

SD-18 Records\

Laboratory Quality Management Manual\; *FIO*\.

PART 2. PRODUCTS (Not Applicable)

PART 3. EXECUTION

3.1. SITE MONITORING

The Contractor shall provide all necessary sampling equipment required to accurately monitor construction operations and activities as specified below.

3.1.1. The Contractor shall operate, calibrate, and maintain all equipment in accordance with the equipment manufacturers' operation and maintenance instructions.

3.1.2. The Contractor shall provide all sample bottles, carriers, preservatives, containers, equipment and other related items necessary to properly carry out the sampling and analysis program as specified. The Contractor's personnel shall perform sample collection and sample preservation required for all off-site laboratory analysis.

3.1.3. The Contractor shall provide for prompt sampling and turn-around of analysis so as not to delay the project. Daily samples shall have a 72-hour turn-around time, weekly samples shall have a 10-day turn-around time and monthly samples shall have a two (2) week turn-around time.

3.1.4. The Contractor shall furnish labor, equipment and facilities to obtain and handle samples at the project site, to facilitate inspections and analyses, and to provide storage, preservation (including refrigeration) of the samples and instrument standards, as appropriate.

3.1.5. The Contractor shall ensure that transportation, chain of custody, and ultimate disposal of samples takes place in accordance with EPA procedures.

3.1.6. The Contractor shall provide for documentation and data management of the analytical results.

3.1.7. The Contractor shall comply with specified standards and ascertain compliance of materials with requirements of the Contract Documents.

3.1.8. The Contractor shall provide for laboratory QA/QC samples including blanks, duplicates, splits, and matrix spikes as appropriate.

3.1.9. The Contractor shall provide properly cleaned sample containers that contain the required preservatives.

3.1.10. The Contractor shall follow chain of custody requirements in accordance with EPA protocols as appropriate.

3.2. *SAMPLING AND ANALYSIS PLAN (SAP)*\.

The Sampling and Analysis Plan (SAP) shall consist of a Quality Assurance Project Plan (QAPP), and Field Sampling Plan (FSP). The QAPP shall outline the Contractor's quality control/quality assurance program and incorporate the following sections as outlined below. The FSP shall outline all work involving the collection of chemical data to be completed in the field and procedures to be used during the remediation and operation of the sites. The SAP shall be approved by the EPA prior to initiation of any field activities.
Remedial action Contractor will be required to modify this QAPP based on the elements of the QAPP, personnel and SOPs.

3.2.1. ELEMENTS OF THE QAPP

Elements of the QAPP shall include the following: (1) Title page, (2) Table of Contents, (3) Project Description, (4) Project Organization and Responsibilities, (5) Quality Assurance Objectives, (6) Sampling Locations and Procedures (or SOP and approach), (7) Sample Custody and Holding Times, (8) Analytical Procedures, (9) Calibration Procedures, (10) Internal QC Checks, (11) Calculation of Data Quality Indicators, (12) Corrective Actions, (13) Data Reduction, Review, Validation, and Reporting, (14) Preventive Maintenance, (15) Performance/System Audits, and (16) QA Reports to Management. Additional guidance is provided in the sections below, and in the EPA QA/R-5, Interim Final, August 1994 document.

3.2.2. QUALITY CONTROL (QC) PROGRAM

As part of the QC program the Contractor shall collect duplicate samples, split samples, and field blanks. Of these samples, those analyzed by the Contractor's laboratory are termed "QC samples."

3.2.2.1. QC samples, which shall be collected by the Contractor and analyzed by the Contractor's laboratory, shall include duplicate samples and field blanks. The Contractor shall describe in detail in the QAPP how QC samples will be collected, analyzed, recorded and evaluated. The QAPP shall describe corrective measures which the Contractor will take whenever QC results are outside acceptable limits. The Contractor shall maintain a bound logbook containing all QC data and document corrective actions. Individuals responsible for maintaining QC data shall sign the notebook.

3.2.2.1.1. At a minimum, the number of QC duplicate samples collected and analyzed by the Contractor shall equal ten percent (10%) of the number of analytical chemical samples collected each week for each matrix. The Contractor shall collect duplicate samples in exactly the same manner as the original samples, and shall use identical containers and methods of preservation, storage, transport, and analysis.

3.2.2.1.2. At a minimum, the number of QC field blanks collected and analyzed by the Contractor shall equal ten percent (10%) of the number of analytical chemical samples collected each week for each matrix. For the purposes of this contract the matrices requiring field blanks are the same as for duplicate samples above. Field blanks shall be rinsates of decontaminated sampling equipment and shall be collected at the sampling location. The water used for the rinsate shall be analyte-free or deionized water. The Contractor shall use identical containers and methods of preservation, storage, and transport for original samples and field blanks.

3.2.3. ORGANIZATION STRUCTURE AND QUALITY MANAGEMENT RESPONSIBILITIES

The Contractor shall provide an organizational chart outlining assigned individuals in the Quality Management (QM) hierarchy. Any subcontractors selected must also list personnel with QC responsibilities. The project organization must address Contractor-subcontractor QC interactions. All individuals listed must also be accompanied by a description of their QC responsibilities for this project. Also include the individuals names, resumes, authorities, and qualifications. The Contractor shall name a Project QC manager. The QC manager shall implement the SAP for the project. Specific supervision and inventory of the QC manager's responsibilities include, but are not limited to:

3.2.3.1. The Contractor's laboratory shall provide detailed resumes of the laboratory's QC personnel. The resumes shall describe relevant education, years and types of work experience, and specifically describe instrument experience. The personnel listed shall include all applicable technicians, chemists, supervisors and QC managers.

3.2.3.2. Coordinating with the analytical laboratory for the receipt of samples, the reporting of analytical results and recommending corrective actions to correct deficiencies in the sampling as appropriate;

3.2.3.3. The QC Manager shall have at least one year of experience in the review of chemical data. The QC Manager shall assess the data quality and implement corrective actions in situations where unacceptable data has been generated.

3.2.3.4. The Contractor's QC manager shall report to a Senior Company Officer (i.e., QC management shall be separate from project management). This officer shall provide a signed letter to the QC manager describing the QC manager's responsibilities and authorities in the QM program. A copy of this letter shall be included in the QAPP.

3.2.4. SAMPLE COLLECTION, PRESERVATION, TRANSPORTATION, AND CUSTODY PROCEDURES

All sampling activities shall be performed according to protocols, specific to each parameter of interest, promulgated by the EPA. Where such protocols have not been established by the EPA protocols established by some other recognized authority (i.e. ASTM) should be utilized. The SAP shall fully describe all sampling procedures including those below.

3.2.4.1. The Contractor shall furnish all information relative to the sampling process, including equipment used, sample volume, and sampling technique. The Contractor shall supply all references to the procedures used.

3.2.4.2. The types of containers and procedures used for cleaning these containers shall be consistent with EPA requirements for the specific parameters of interest.

3.2.4.3. During sampling activities, appropriate decontamination measures shall be taken to minimize sample contamination from external sources such as sampling equipment or sample containers. The sampling program established for this project shall include provisions for generating the appropriate field QA/QC samples to monitor the effectiveness of the specific procedures employed in controlling external contamination.

3.2.4.4. All samples collected shall be preserved according to EPA protocols established for the parameters of interest. Appropriate measures shall be taken to ensure that storage requirements with respect to temperature are maintained during transport to the laboratory, and prior to log-in and storage at the laboratory.

3.2.4.5. Environmental samples shall be transported to the Contractor laboratory via the most rapid means. All samples shall be packaged and transported according to EPA and DOT regulations.

3.2.4.6. Samples shall be collected, transported, and received under strict chain of custody protocols consistent with procedures established by the EPA. Upon receipt at the laboratory, the laboratory shall provide a specific mechanism through which the disposition and custody of the samples are accurately documented during each phase of the analytical process.

3.2.4.7. All information pertinent to the environmental samples, including specific field collection data and laboratory observations shall be recorded in permanently bound notebooks. The Contractor laboratory shall also employ a specific information management system to assist in tracking the progress of each sample through the analytical process.

3.2.4.8. The Contractor shall provide for prompt sampling and turn-around of analysis so as not to delay the project.

3.2.5. ANALYTICAL METHODS AND PROCEDURES.

The analytical methods used for sample analysis shall be in accordance with EPA 600/4-82-057 and EPA SW-846. Laboratory reporting shall be at least a factor of two below the applicable regulatory requirements.

3.2.6. Off Gas Collection Condensate. To characterize the influent and effluent condensate of the GAC system, the following analyses will be performed:

3.2.6.1. VOCs by EPA Method 8260B
3.2.6.2. Semi-VOCs by EPA Method 3550B/8270C
3.2.6.3. H_2S (Hach Kit or Equivalent)

3.2.7. Flare System. To characterize the influent and effluent of the GAC for the flare system, samples shall be analyzed for the following:

3.2.7.1. VOCs by EPA Method 8260B
3.2.7.2. Semi-VOCs by EPA Method 3550B/8270C
3.2.7.3. H_2S (Hach Kit or Equivalent)

3.2.8. Gas Collection Condensate. The condensate from the gas collection system shall be sampled to satisfy any discharge or TSD criteria, and/or POTW standards. Analytical requirements shall include the following:

3.2.8.1. VOCs by EPA Method 8260B
3.2.8.2. Semi-VOCs by EPA Method 3550B/8270C
3.2.8.3. Pest/PCBs by EPA Method 3550B/8081A
3.2.8.4. TAL metals by EPA Methods 3005A,3010A,3020A/6010,6020 & 7000
3.2.8.5. Dioxin 2,3,7,8-tetrachlorodibenzo-p-dicxin(TCDD) by EPA Method 8280A.
3.2.8.6. Oil & Grease by EPA Method 413.1
3.2.8.7. Total Suspended Solids by EPA Method 160.3
3.2.8.8. Carbonaceous Biochemical Oxygen (cBODs) by EPA Method 405.1
3.2.8.9. Ammonia (NH3-N) by EPA Method 350.2
3.2.8.10. Phosphorus by EPA Method 365.1
3.2.8.11. Surfactants
3.2.8.12. Phenolics by EPA Method 9066

3.2.9. Borrow Material. One sample from each borrow source shall be analyzed for the parameters outlined below:

3.2.9.1. VOCs by EPA Method 8260BA
3.2.9.2. Semi-VOCs by EPA Method 3550B/8270C
3.2.9.3. Pest/PCBs by EPA Method 3550B/8081A
3.2.9.4. TAL metals by EPA Methods3005A,3010A,3020A/6010,6020 & 7000

3.2.10. Wastewaters. One water sample of wastewater shall be analyzed for the parameters outlined below:

3.2.10.1. VOCs by EPA Method 8260B
3.2.10.2. Semi-VOCs by EPA Method 3550B/8270C
3.2.10.3. Pest/PCBs by EPA Method 3550B/8081A
3.2.10.4. TAL metals by EPA Methods 3005A,3010A, 3020A/6010,6020 & 7000

3.2.10.5. Dioxin 2,3,7,8-tetrachlorodibenzo-p-dioxin(TCDD) by EPA Method 8280A
3.2.10.6. Oil & Grease by EPA Method 413.1
3.2.10.7. Total Suspended Solids by EPA Method 160.3
3.2.10.8. Carbonaceous Biochemical Oxygen (cBODs) by EPA Method 405.1
3.2.10.9. Ammonia (NH3-N) by EPA Method 350.2
3.2.10.10. Phosphorus by EPA Method 365.1
3.2.10.11. Surfactants
3.2.10.12. Phenolics by EPA Method 9066

3.2.11. Groundwater Monitoring.Twenty three (23) groundwater samplescomprising of one sample from each of the 23 monitoring wells shall be collected and analyzed for the following:

3.2.11.1. VOCs by EPA Method 8260B
3.2.11.2. Semi-VOCs by EPA Method 3550B/8270A
3.2.11.3. Pest/PCBs by EPA Method 3550B/8081A
3.2.11.4. TAL metals by EPA Methods 3005A,3010A, 3020A/6010, 6020 & 7000

3.2.12. Point Source Emission Monitoring

3.2.12.1. NMOC by Method 25A (40CFR Part 60 Vol. II)

3.2.13. Real Time Landfill Gas Monitoring

Real time monitoring of the landfill gas monitoring probes shall be performed to gather data to aid in the operation of the landfill gas collection system. The landfill gas monitoring probes shall monitor the produciton of methane generated by the landfill.

3.2.14. Monitoring for Methane

3.2.14.1. Location of Landfill Gas Monitoring Probes

The construction and location of the landfill gas monitoring probes are shown on the drawings and specified in Section \=02253=\ LANDFILL GAS MONITORING PROBES. These probes shall be fitted in such a manner that gas colleciton or sampling instrumentation are capable of collecting landfill gas samples or landfill gas readings from a portable gas analyzer.

3.2.14.2. Frequency of Landfill Gas Readings

The Contractor shall sample all of the landfill gas monitoring probes at the frequency of: weekly after installation of geomembrane until 2 months after completion of the landfill construction (closure); two month intervals until the sixth month of post closure; and quarterly after the sixth month of post closure to the end of the contract.

3.2.14.3. Instrumentation for Landfill Gas Monitoring

The Contractor shall use a portable gas-analyzer capable of detecting Methane, and if possible Oxygen and Carbon Dioxide, from the landfill gas monitoring

probes. The Contractor will be responsible for providing a trained operator for the gas-analyzer. This person must be knowledgeable in the calibration, corrective action, and basic operation of the portable gas-analyzer.

3.2.15. POLLUTANTS OF CONCERN FOR CITY OF ELKHART NPDES PERMIT.

Contractor shall ensure that all discharge requirements, constituents and concentrations, for the City of Elkhart, IN and the State of Indiana are met. The following are but not limited to, are constituents of concern.

Constituent	
METALS & INORGANICS	Allowable Max. mg/L
Antimony	TBD
Arsenic	2.1
Beryllium	TBD
Cadmium	1.2
Total Chromium	7.0
Copper	4.5
Lead	0.60
Mercury	0.02
Nickel	4.1
Selenium	TBD
Silver	1.2
Thallium	TBD
Zinc	TBD
Asbestos	TBD
Cyanide	TBD
Phenolic Compounds	TBD
Volatiles by EPA Method 8260A	ug/L
Acrolein	10
Benzene	10
Carbon Tetrachloride	10
Chlorobenzene	10
Chloroethane	10
Chloroform	10
Chloromethane	10
1,2-Dichlorobenzene	10
1,3-Dichlorobenzene	10
1,4-Dichlorobenzene	10
1,1-Dichloroethane	10
1,2-Dichloroethane	10
1,1-Dichloroethene	10
trans-1,2-Dichloroethene	10
1,2-Dichloropropane	10

1,3-Dichloropropene	10
Ethylbenzene	10
Hexachlorobutadiene	10
Methylene chloride	10
Toluene	10
1,2,4-Trichlorobenzene	10
1,1,1-Trichloroethane	10
1,1,2-Trichloroethane	10
Trichloroethene	10
Vinyl chloride	10

The maximum allowable concentrations for the folllowing constituents shall be decided (TBD) after the preliminary analysis is submitted with the application for a discharge permit to the Public Works & Utilities of the City of Elkhart, IN

Semivolatiles by EPA Method 8270

Acenaphthene
Acenaphthylene
Anthracene
Benz(a)anthracene
Benzo(b)fluoranthene

Benzo(k)fluoranthene
Benzo(a)pyrene
Benzo(ghi)perylene
Bis(2-chloroethyl) ether
Bis(2-chloroethoxy)methane

Bis(2-chloroisopropyl) ether
Bis(2-ethylhexyl) phthalate
4-Bromophenyl phenyl ether
Butyl benzyl phthalate
2-Chloronaphthalene
2-Chlorophenol
4-Chlorophenyl phenyl ether

Chrysene
Dibenzo(a,h)anthracene
Di-n-butyl phthalate
1,3-Dichlorobenzene
1,4-Dichlorobenzene
3,3'-Dichlorobenzidine
2,4-Dichlorophenol
Diethyl phthalate

2,4-Dimethylphenol
Dimethyl phthalate
2-Methyl-4,6-dinitrophenol
2,4-Dinitrophenol

2,4-Dinitrotoluene

2,6-Dinitrotoluene
Di-n-octylphthalate
Fluoranthene
Fluorene
Hexachlorobenzene

Hexachlorobutadiene
Hexachlorocyclopentadiene
Hexachloroethane
Indeno(1,2,3-cd)pyrene
Isophorone

Naphthalene
Nitrobenzene
2-Nitrophenol
4-Nitrophenol

N-Nitrosodiphenylamine
N-Nitrosodi-n-propylamine
Pentachlorophenol
Phenanthrene
Phenol
Pyrene
1,2,4-Trichlorobenzene

Organochlorine Pesticides & PCBs

Aldrin
alpha-BHC
beta-BHC
delta-BHC
gamma-BHC (Lindane)

Chlordane (technical)
4,4'-DDD
4,4'-DDE
4,4'-DDT
Dieldrin

Endosulfan I
Endosulfan II
Endosulfan sulfate
Endrin
Endrin aldehyde

Heptachlor
Heptachlor epoxide
Toxaphene

Aroclor-1016
Aroclor-1221
Aroclor-1232
Aroclor-1242
Aroclor-1248
Aroclor-1254
Aroclor-1260

OTHER POLLUTANTS

Oil & Grease by EPA Method 413.1
Total Suspended Solids by EPA Method 160.3
Carbonaceous Biochemical Oxygen (cBODs) by EPA Method 405.1
Ammonia (NH3-N) by EPA Method 350.2
Phosphorus by EPA Method 365.1
Surfactants
Phenolics by EPA Method 9066

3.2.16. ANALYTICAL/STATISTICAL/CONTROL PARAMETERS.

The Contractor shall provide a system of internal QC checks designed to establish technically sound criteria for each measurement parameter which will serve to accept or reject data in a uniform and systematic manner. The SAP shall describe in detail the laboratory QC procedures including specific compounds and their appropriate performance criteria. These checks are designed to insure accuracy in the sampling procedure and the analytical methods and include laboratory blanks, laboratory duplicates, matrix spikes, matrix spike duplicates, calibration verification, surrogate standards, reference standards and performance evaluation samples.

3.2.16.1. The criteria for data acceptance shall address the following items in a concise manner. Requirements for accuracy, sensitivity and precision shall be no less stringent than the guidelines listed in the EPA methods. The SAP shall concisely address the following items indicating how they will be implemented:

3.2.16.2. Discussion shall include the accuracy of each analytical method as applied to a given analytical instrument for given analyses in given matrices and the degree of accuracy required for this project. Analytical methods shall be validated for the same or similar matrix. This may require discussion of instrumentation, reference standards or spiked samples, sample collection, analytical procedures, calibration procedures and performance evaluation samples.

3.2.16.3. Discussion shall include the sensitivity of each proposed analytical method in each matrix involved at this site and the sensitivity required for this project. Calibration methods for determining detection levels shall be addressed, as well as a discussion of the appropriate contract required detection limits.

3.2.16.4. Discussion shall include the analytical methodology used to determine the precision of each analytical method using duplicate samples and instrumentation checks, and the degree of precision necessary for this project.

In determining the precision of the analytical method for given analyses, the exact sample matrix shall be taken into account.

3.2.16.5. Discussion shall include the methodology for data comparison, listing specific units, equations and data formats to be used. The Contractor shall also address the following.

3.2.16.5.1. Checks for transmittal, data reduction and reporting errors.

3.2.16.5.2. Supportive rationale that samples are representative of the matrix being analyzed or the site location.

3.2.16.5.3. To assure analytical accuracy and consistency, the system of internal QC checks shall include:

3.2.16.5.3.1. QC samples to be analyzed at a minimum at a frequency of five to ten percent of the total samples of each type collected.

3.2.16.5.3.2. Analysis of equipment and field blank samples, laboratory duplicates, spiked samples and QC check samples. Quantities or estimates of the quantities and basis for estimates shall be addressed.

3.2.16.6. The Contractor shall describe a system of external QA checks for sampling only to independently assess whether analytical data are within acceptable control limits. The following items shall be included in this section of the QAPP.

3.2.16.6.1. At the request of the EPA, duplicate or split (preferred) samples and field blanks shall be collected by the Contractor at the rate of ten percent (10%) at a minimum for samples collected for the purpose of system performance evaluation.

3.2.16.7. The Contractor shall analyze any additional audit samples as well as accomodating any additional Contracting Officer inspections, if necessary, at the Contractors expense.

3.2.16.8. The QAPP shall also include a discussion of the corrective action to be taken if values are questionable or outside the established control limits. The following items shall be addressed in this section of the QAPP.

3.2.16.8.1. Limits of data acceptability for each analytical parameter and sample matrix along with the corrective action to be taken when these limits are exceeded.

3.2.16.8.2. Information regarding the poor precision shall be documented if the limits are exceeded.

3.2.16.8.3. Personnel responsible for initiating and performing the corrective action shall be indicated.

3.2.17. CALIBRATION PROCEDURES AND FREQUENCY.

3.2.17.1. The Contractor shall describe in detail, or present references to, the procedures for the calibration of all analytical instrumentation to be used either in the laboratory or on-site (including the frequency of these checks) to assure that the equipment is functioning optimally. Information shall be provided on instrumentation manufacturer, model and accessories.

3.2.17.2. The calibration procedures and instrumentation shall be consistent with the sample analysis requirements of this project and applicable EPA approved methods.

3.2.18. PREVENTIVE MAINTENANCE.

3.2.18.1. The Contractor shall provide and describe in the QAPP a system for the preventive maintenance of all analytical equipment and instrumentation to be used either in the laboratory or on-site (including the frequency of these maintenance operations).

3.2.18.2. Detailed records of these operations shall be maintained and must be available for inspection by the EPA on request.

3.2.18.3. Maintenance operations shall be performed by qualified maintenance personnel. Experience and qualifications of these personnel shall be included in the QAPP.

3.2.19. DATA ANALYSIS AND REPORTING.

The Contractor shall describe the specific system to be used in handling the raw data from the time of analysis until the time of reporting. At a minimum the Contractor shall address the following items for each analytical method and major measurement parameter anticipated during this project.

3.2.19.1. The data analysis scheme, including units and equations, required to calculate concentrations or the value of the measured parameter.

3.2.19.2. The principal criteria used to assure data integrity during collection and reporting.

3.2.19.3. Plans for treating outliers or other questionable data.

3.2.19.4. Description of the data management systems including, but not limited to, the collection of raw data, data storage, and data QA.

3.2.19.5. Identification of raw data, data storage and data QC and QA documentation.

3.2.19.6. Identification of individuals to be involved in the reporting sequence.

3.2.19.7. Data generated by analytical testing shall be supplied to the Resident Engineer who will get it reviewed by a Chemist and forward it to the EPA, as it becomes available. The Contractor shall report in writing within two working

days any significant problems with analytical procedures, instrument calibrations, or QC limit upsets along with the corrective actions that have been taken to solve the problems. Samples requiring reanalysis shall be completed at no additional cost.

3.2.20. CONTRACTOR LABORATORY REQUIREMENTS

The Contractor shall provide off-site, independent laboratory services to ensure Contractor compliance with all applicable permit requirements. The Contractor shall identify a proposed independent laboratory and at least one alternate laboratory. An independent laboratory is defined as a laboratory which is not owned in whole or in part by the Contractor, Contractor's parent company, or any wholly or partially owned subsidiary of the contractor. Laboratory capabilities shall be provided for the duration of the operation and maintenance period. The services of the off-site independent laboratory shall include the following items, as a minimum:

3.2.20.1. Capable of initiating and sustaining the laboratory services immediately upon award of this Contract.

3.2.20.2. Perform, or cause to be performed, all analyses as specified herein including all required analyses.

3.2.20.3. Maintain internal record keeping, in accordance with good laboratory practices (GLP).

3.2.20.4. If required by EPA, the Contractor's laboratory shall be required to successfully analyze performance evaluation samples supplied by the EPA.

3.2.20.5. The off-site independent laboratory shall not provide any services by subcontractor without prior approval of the EPA.

3.2.20.6. The laboratory shall be subject to the State of Indiana certification.

3.2.20.7. All sample analysis work shall be completed and included in the monthly report.

3.2.20.8. The EPA reserves the right to require the use of another approved off-site independent laboratory at any time should the laboratory in use at the time fail to meet the requirements specified herein (as determined by the Contracting Officer.)

3.3. *LABORATORY QUALITY MANAGEMENT MANUAL*\.

The Contractor shall submit for approval the off-site laboratories' formal QA/QC program and procedures.

SECTION 01420
VEHICLE AND BULKY DEBRIS DECONTAMINATION

INDEX

1. HEALTH AND SAFETY REQUIREMENTS
2. SUBMITTALS
3. CONTRACTOR RESPONSIBILITY
4. PRESSURE WASHER
5. HOSING AND FITTINGS
6. DECONTAMINATION FACILITY
7. MISCELLANEOUS EQUIPMENT
8. NEED FOR DECONTAMINATION
9. EXTENT OF DECONTAMINATION
10. OPERATION AND MAINTENANCE OF DECONTAMINATION FACILITY
11. LIMITATION ON WATER USE
12. DISPOSAL OF DECONTAMINATION WATER
13. DISPOSAL OF BULKY DEBRIS
14. DECONTAMINATION FACILITY REMOVAL

PART 1 - GENERAL

1. **HEALTH AND SAFETY REQUIREMENTS.** All work shall be completed in accordance with Section: SAFETY, HEALTH, AND EMERGENCY RESPONSE. 40 CFR 268.45 "Hazardous Debris" regulations in 57 CFR 37194 are applicable to this section.

2. **SUBMITTALS.** Contracting Officer's approval is required for submittals with a "GA" designation; submittals having an "FIO" designation are for information only. The following shall be submitted in accordance with Section \=01300=\ SUBMITTAL PROCEDURES:

SD-01 Data\

Vehicle and Bulky Debris Decontamination Plan (VBDDP)\; *GA*\

The Contractor shall submit to the Contracting Officer a Vehicle and Bulky Debris Decontamination Plan for approval 2 weeks prior to the start of work. The VBDDP shall detail all equipment (catalog cuts shall be provided) and procedures proposed for the decontamination of bulky debris and vehicles leaving the site.

3. **CONTRACTOR RESPONSIBILITY.** The Contractor shall be responsible for the construction and removal of decontamination facilities specified in section \=02513=\: CONCRETE DECONTAMINATION PAD and for provision and maintenance of the equipment required for decontamination of vehicles as specified in PART 2 - MATERIALS and for the maintenance of the decontamination pads, drainage pipe, and manholes draining the pads. The Contractor shall be responsible for proper operation of the decontamination systems. The Contractor shall be responsible for decontamination of all vehicles and bulky debris requiring decontamination, as specified in paragraph: NEED FOR DECONTAMINATION, including any vehicles of the Contracting Officer or visitors authorized by the Contractor or Contracting Officer. In general, 40 CFR 268.45 Hazardous Debris Regulations and 57 FR 37194 shall apply to this Remedial Action.

PART 2 - MATERIALS

4. **PRESSURE WASHER.** The Contractor shall provide portable low volume, high pressure washer(s). The pressure washer(s) shall be the property and responsibility of the Contractor.

5. **HOSING AND FITTINGS.** The Contractor shall provide all necessary hosing and fittings necessary to connect the pressure washer(s) to the water supply.

6. **DECONTAMINATION FACILITY.** The contractor shall construct and remove after the necessity of decontamination has been completed, a decontamination facilities as specified in Section \=02513=\: CONCRETE DECONTAMINATION PAD and as shown on the contract drawings.

7. **MISCELLANEOUS EQUIPMENT.** The Contractor shall be responsible for providing all scrub brushes or other equipment necessary to remove caked or hardened material from the vehicles. The contractor shall properly dispose of all miscellaneous equipment upon completion of use.

PART 3 - EXECUTION

8. **NEED FOR DECONTAMINATION.**

8.1. All vehicles entering the Exclusion Zones, as defined in Section \=01110=\ SAFETY, HEALTH, AND EMERGENCY RESPONSE, from the start of contaminated material excavation and hauling until completion of hauling and from the start of landfill work to the time the first lift of clean random fill borrow material is fully placed over the landfill cover area for the final site grading shall require decontamination. Once the first lift of fill has been fully installed, the washing of excessive mud from the vehicles shall still be required, as determined by the Contracting Officer, to prevent the excessive tracking of soil onto the roadways or pedestrian walkways.

8.2. All bulky debris, such as concrete rubble, empty drums, synthetic liners, and miscellaneous utilities such as piping that leaves the site shall require decontamination prior to disposal. All bulky debris shall be cleared of excessive mud and washed to the extent that visible soil is removed from bulky debris. Particular attention shall be given to areas of bulky debris that either contained or were in contact with on-site waste fill.

9. **EXTENT OF DECONTAMINATION.** All vehicles requiring decontamination, as defined in paragraph: NEED FOR DECONTAMINATION, shall be washed to the extent that visible soil is removed from the vehicle body and undercarriage and no visible tracking of soil onto roadways or pedestrian walkways occurs, as determined by the Contracting Officer.

10. **OPERATION AND MAINTENANCE OF THE DECONTAMINATION FACILITIES.** The decontamination process shall be performed in such a manner that all water used and soil removed during decontamination falls onto the decontamination pads and is captured by the trench drain provided in the decontamination facility. Soil captured by the trench drain shall be removed on a daily basis or as required by the Contracting Officer. The decontamination pads shall be washed down at the completion of each day of work. All soil removed from the trench drain shall be

transported and stored in the contractor constructed temporary stock pile facility or in the landfill area. The soil obtained from the decontamination of equipment utilized in the landfill area shall be disposed of in the random fill zone of the landfill.

11. LIMITATION ON WATER USE. All water used for decontamination shall be acquired by the contractor from off-site at no additional cost to the contract.

12. DISPOSAL OF DECONTAMINATION WATERS. All decontamination waters are to be disposed of as specified in section \=01500=\: DECONTAMINATION AND DISPOSAL.

13. DISPOSAL OF BULKY DEBRIS. After decontamination, all bulky debris shall be disposed of in the random fill zone of the landfill cover system.

14. DECONTAMINATION FACILITY REMOVAL. After completion of all decontamination, the contractor shall remove the decontamination facilities and dispose of in the random fill zone of the landfill cover system.

* * *

SECTION 01430

ENVIRONMENT PROTECTION

INDEX

PART 1 GENERAL
1.1 REFERENCES
1.2 DEFINITIONS
1.3 SUBMITTALS
1.4 ENVIRONMENTAL PROTECTION REQUIREMENTS
1.5 ENVIRONMENTAL PROTECTION PLAN
1.6 PRECONSTRUCTION SURVEY

PART 2 PRODUCTS (Not Applicable)

PART 3 EXECUTION
3.1 SPECIAL ENVIRONMENTAL PROTECTION REQUIREMENTS
3.2 HISTORICAL, ARCHAEOLOGICAL, AND CULTURAL RESOURCES
3.3 PROTECTION OF LAND AREAS
3.4 PROTECTION OF WATER RESOURCES
3.5 PROTECTION OF AIR RESOURCES
3.6 EROSION AND SEDIMENT CONTROL
3.7 NOT USED
3.8 INSPECTION
3.9 MAINTENANCE OF POLLUTION CONTROL FACILITIES
3.10 TRAINING OF CONTRACTOR PERSONNEL
3.11 POST-CONSTRUCTION CLEANUP OR OBLITERATION

SECTION 01430

ENVIRONMENT PROTECTION

PART 1 GENERAL

1.1 REFERENCES

The publications listed below form a part of this specification to the extent referenced. The publications are referred to in the text by basic designation only.

CODE OF FEDERAL REGULATIONS (CFR)

\-40 CFR 261-\ Identification and listing of Hazardous Waste

1.2 DEFINITIONS

Environmental pollution and damage is defined as the presence of chemical, physical, or biological elements or agents that adversely affect human health or welfare; unfavorably alter ecological balances of plant or animal communities; or degrade the environment from an aesthetic, cultural or historic perspective. Environmental protection is the prevention/control of pollution and habitat disruption that may occur during construction. The control of environmental pollution and damage requires consideration of air, water, land, biological and cultural resources; and includes management of visual aesthetics; noise; solid, chemical, gaseous, and liquid waste; radiant energy and radioactive materials; and other pollutants.

1.3 SUBMITTALS

Contracting Officer's approval is required for submittals with a "GA" designation; submittals having an "FIO" designation are for information only. The following shall be submitted in accordance with Section \-01300-\ SUBMITTAL PROCEDURES:

SD-01 Data\

Environmental Protection Plan\; *GA*\

1.4 ENVIRONMENTAL PROTECTION REQUIREMENTS

The Contractor shall comply with all applicable Federal, State, and local laws and regulations. The Contractor shall provide environmental protective measures and procedures to prevent and control pollution, limit habitat disruption, and correct environmental damage that occurs during construction. Safety and health documents and procedures for hazardous, toxic, and radioactive waste (HTRW) site activities and underground storage tank (UST) removal are specified in Section \-01110-\ SAFETY, HEALTH, AND EMERGENCY RESPONSE (HTRW/UST).

1.4.1 Protection of Features

The Contractor shall prepare a list of features requiring protection. The Contractor shall protect those environmental features, indicated specially on the drawings, in spite of interference which their preservation may cause to the Contractor's work under the contract.

1.5 ENVIRONMENTAL PROTECTION PLAN

Within 20 calendar days of Notice of Award, the Contractor shall submit an *Environmental Protection Plan*\ for review and acceptance by the Contracting Officer. The Contractor shall meet with representatives of the Contracting Officer to review and alter his proposal as needed for compliance with the environmental pollution control program The plan shall detail the actions which the Contractor shall take to comply with all applicable Federal, State, and local laws and regulations concerning environmental protection and pollution control and abatement, as well as the additional specific requirements of this contract. No physical work at the site shall begin prior to acceptance of the Contractor s plan covering the work to be performed. The environmental protection plan shall include, but not be limited to, the following:

1.5.1 NOT USED

1.5.2 Spill Control Plan

The Contractor shall include as part of the environmental protection plan, a Spill Control Plan. The plan shall include the procedures, instructions, and reports to be used in the event of an unforeseen spill of a substance regulated by the Emergency Response and Community Right-to-Know Act or regulated under State or local laws or regulations. This plan shall include as a minimum:

a. The name of the individual who will be responsible for implementing and supervising the containment and cleanup.

b. Training requirements for Contractor's personnel and methods of accomplishing the training.

c. A list of materials and equipment to be immediately available at the job site, tailored to cleanup work of the potential hazard(s) identified.

d. The names and locations of suppliers of containment materials and locations of additional fuel oil recovery, cleanup, restoration, and material-placement equipment available in case of an unforeseen spill emergency.

e. The methods and procedures to be used for expeditious contaminant cleanup.

f. The name of the individual who will report any spills or hazardous substance releases and who will follow up with complete documentation. This individual shall immediately notify the Contracting Officer in addition to the legally required Federal, State, and local reporting channels (including the National Response Center 1-800-424-8802) if a reportable quantity spill occurs.

The plan shall contain a list of the required reporting channels and telephone numbers.

1.5.3 Recycling and Waste Minimization Plan

The Contractor shall submit a Recycling and Waste Minimization Plan as a part of the Environmental Protection Plan. The plan shall detail the Contractor's actions to comply with the following recycling and waste minimization requirements:

a. The Contractor shall participate in State and local government sponsored recycling programs to reduce the volume of solid waste materials at the source.

1.5.4 Contaminant Prevention Plan

As a part of the Environmental Protection Plan, the Contractor shall prepare a contaminant prevention statement identifying potentially hazardous substances to be used on the job site and intended actions to prevent accidental or intentional introduction of such materials into the air, water, or ground. The Contractor shall detail provisions to be taken to meet Federal, State, and local laws and regulations regarding the storage and handling of these materials.

1.5.5 Environmental Monitoring

The Contractor shall include in the plan the details of environmental monitoring requirements under the laws and regulations and a description of how this monitoring will be accomplished.

1.6 PRECONSTRUCTION SURVEY

Prior to start of any on-site construction activities, the Contractor and the Contracting Officer's Representative (COR) shall make a joint condition survey after which the Contractor shall prepare a brief report indicating on a layout plan the condition of trees, shrubs and grassed areas immediately adjacent to the site of the work and adjacent to his assigned storage area and access route(s) as applicable. This report will be signed by both the Contracting Officer's Representative and Contractor upon mutual agreement as to its accuracy and completeness.

PART 2 PRODUCTS (Not Applicable)

PART 3 EXECUTION

3.1 SPECIAL ENVIRONMENTAL PROTECTION REQUIREMENTS

3.1.1 Tree Protection

No ropes, cables, or guys shall be fastened to or attached to any tree(s) for anchorage unless specifically authorized by the Contracting Officer. Where such special use is permitted, the Contractor shall provide effective protection to prevent damage to the tree and other land and vegetative resources. Unless specifically authorized by the Contracting Officer, no construction equipment

or materials shall be placed or used within the dripline of trees shown on the drawings to be saved. No excavation or fill shall be permitted within the dripline of trees to be saved except as shown on the drawings. Where, in the opinion of the Contracting Officer's Representative, trees may possibly be defaced, bruised, injured, or otherwise damaged by the Contractor's equipment or by his other operations, he may direct the Contractor to provide temporary protection of such trees by placing boards, planks, or poles around them. Any tree not designated for removal which is scarred or damaged by the Contractor's equipment or operations shall be restored as nearly as possible to its original condition at the Contractor's expense. All scars made on trees not designated on the plans to be removed by construction operations shall be coated as soon as possible with an approved tree wound dressing. Trees that are to remain, either within or outside established clearing limits, that are damaged by the Contractor so as to be beyond saving in the opinion of the Contracting Officer, shall be immediately removed, if so directed, and replaced with a nursery-grown tree of the same species and size.

3.1.2 Disposal of Solid Wastes

Solid waste is rubbish, debris, waste materials, garbage, and other discarded solid materials (excluding clearing debris and hazardous waste as defined in following paragraphs). Solid waste shall be placed in containers and disposed on a regular schedule. All handling and disposal shall be conducted in such a way as to prevent spillage and contamination. The Contractor shall transport all solid waste off the project site and dispose in compliance with Federal, State, and local requirements.

3.1.3 Disposal of Contractor Generated Hazardous Wastes

Hazardous wastes are hazardous substances as defined in \-40 CFR 261-\, or as defined by applicable State and local regulations. Hazardous waste generated by construction activities shall be removed from the work area and be disposed in compliance with Federal, State, and local requirements. The Contractor shall segregate hazardous waste from other materials and wastes, and shall protect it from the weather by placing it in a safe covered location; precautionary measures against accidental spillage such as berming or other appropriate measures shall be taken. Hazardous waste shall be removed from the project within 60 days. Hazardous waste shall not be dumped onto the ground, into storm sewers or open water courses, or into the sanitary sewer system.

3.1.4 Fuels and Lubricants

Fueling and lubrication of equipment and motor vehicles shall be conducted in a manner that affords the maximum protection against spills and evaporation. Lubricants and waste oil to be discarded shall be stored in marked corrosion-resistant containers and recycled or disposed in accordance with Federal, State, and local laws and regulations.

3.1.5 NOT USED

3.2 HISTORICAL, ARCHAEOLOGICAL, AND CULTURAL RESOURCES

3.2.1 NOT USED

3.2.2 Discovered Historic, Archaeological, and Cultural Resources

If during construction activities, items are observed that may have historic or archaeological value (e.g., Native American human remains or associated objects are discovered), such observations shall be reported immediately to the Contracting Officer so that the appropriate authorities may be notified and a determination made as to their significance and what, if any, special disposition of the finds should be made. The Contractor shall cease all activities that may result in impact to or the destruction of these resources. The Contractor shall prevent his employees from trespassing on, removing, or otherwise disturbing such resources.

3.3 PROTECTION OF LAND AREAS

Except for work areas, storage areas, or access routes specifically assigned for the use of the Contractor under this contract, the land areas outside the limits of permanent work performed under this contract shall be preserved in their present condition. The Contractor shall confine his construction activities to areas defined for work on the plans or specifically assigned for his use. Storage and related areas and access routes required temporarily by the Contractor in the performance of the work will be assigned by the Contracting Officer's Representative. No other areas shall be used by the Contractor without written consent of the Contracting Officer's Representative.

3.4 PROTECTION OF WATER RESOURCES

The Contractor shall control the disposal of fuels, oils, bitumens, calcium chloride, acids or harmful materials, both on and off the premises and shall comply with applicable Federal, State, County and Municipal laws concerning pollution of rivers, streams, and wetlands while performing work under this contract. Special measures shall be taken to prevent chemicals, fuels, oils, greases, bituminous materials, herbicides, and insecticides from entering public waters. Water used in on-site material processing, concrete curing, foundation and concrete cleanup, and other waste waters shall not be allowed to reenter a stream if an increase in the turbidity of the stream could result therefrom. Disposal of water generated during construction dewatering, hydrostatic testing and/or disinfection activities shall conform to Section \=01570=\ DISPOSAL OF WATER.

3.5 PROTECTION OF AIR RESOURCES

Special management techniques as set out below shall be implemented to control air pollution by the construction activities. These techniques supplement the requirements of Federal, State, and local laws and regulations; and the safety requirements under this Contract. If any of the following techniques conflict with the requirements of Federal, State, or local laws or regulations, or safety requirements under this contract, then those requirements shall be followed in lieu of the following.

3.5.1 Particulates

Airborne particulates, including dust particles, from construction activities and processing and preparation of materials shall be controlled at all times, including weekends, holidays, and hours when work is not in progress. The Contractor shall maintain all excavations, stockpiles, haul roads, permanent and temporary access roads, plant sites, disposal sites, borrow areas, and all other work areas free from airborne dust which would cause a hazard or nuisance. Approved temporary methods consisting of sprinkling or similar methods will be permitted to control dust. Dust control shall be performed as the work proceeds and whenever a dust nuisance or hazard occurs.

3.5.2 Burning

Burning shall be prohibited on the the project site.

3.6 EROSION AND SEDIMENT CONTROL

The Contractor shall be responsible for providing erosion and sediment control measures in accordance with local, state, and federal regulations. The erosion and sediment controls selected and maintained by the Contractor shall be such that local, state, and federal water quality standards are not violated as a result of the Contractor's construction activities. Any defficiencies in the Contractor's controls determined by the Contracting Officer to have caused a violation of water quality standards shall be remedied by the Contractor at his own expense. The area of bare soil exposed at any one time by construction operations should be held to a minimum. Any erosion and sediment control measures which are damaged or found to be ineffective shall be remedied by the Contractor. Any areas damaged by erosion shall be repaired.

3.7 NOT USED

3.8 INSPECTION

If the Contracting Officer notifies the Contractor in writing of any observed noncompliance with contract requirements or Federal, State, or local laws, regulations, or permits, the Contractor shall inform the Contracting Officer of proposed corrective action and take such action to correct the noncompliance. If the Contractor fails to comply promptly, the Contracting Officer may issue an order stopping all or part of the work until satisfactory corrective action is taken. No time extensions will be granted or costs or damages allowed to the Contractor for any such suspension.

3.9 MAINTENANCE OF POLLUTION CONTROL FACILITIES

The Contractor shall maintain all constructed pollution control facilities and portable pollution control devices for the duration of the Contract or for the length of time construction activities create the particular pollutant.

3.10 TRAINING OF CONTRACTOR PERSONNEL

Contractor personnel shall be trained in environmental protection and pollution control. The Contractor shall conduct environmental protection/pollution control meetings for all Contractor personnel monthly . The training and meeting agenda shall include methods of detecting and avoiding pollution, familiarization with pollution standards, both statutory and contractual, installation and care of facilities (vegetative covers, etc.), and instruments required for monitoring purposes to ensure adequate and continuous environmental protection/pollution control. Anticipated hazardous or toxic chemicals or wastes, and other regulated contaminants, shall also be discussed. Other items to be discussed shall include recognition and protection of archaeologic sites and artifacts.

3.11 POST-CONSTRUCTION CLEANUP OR OBLITERATION

The Contractor shall, unless otherwise instructed in writing by the Contracting Officer, obliterate all signs of temporary construction facilities such as haul roads, work areas, structures, foundations of temporary structures, stockpiles of excess or waste materials, and other vestiges of construction prior to final acceptance of the work. The disturbed areas shall be graded and filled and the entire area seeded.

SECTION 01440

CONTRACTOR QUALITY CONTROL
10/94

INDEX

PART 1 GENERAL
1.1. REFERENCES
1.2. NOT USED

PART 2 PRODUCTS (Not Applicable)

PART 3 EXECUTION
3.1. GENERAL
3.2. QUALITY CONTROL PLAN
3.3. COORDINATION MEETING
3.4. QUALITY CONTROL ORGANIZATION
3.5. SUBMITTALS
3.6. CONTROL
3.7. TESTS
3.8. COMPLETION INSPECTION
3.9. DOCUMENTATION
3.10. SAMPLE FORMS
3.11. NOTIFICATION OF NONCOMPLIANCE

SECTION 01440

CONTRACTOR QUALITY CONTROL
10/94

PART 1. GENERAL

1.1. REFERENCES

The publications listed below form a part of this specification to the extent referenced. The publications are referred to in the text by basic designation only.

AMERICAN SOCIETY FOR TESTING AND MATERIALS (ASTM)

\-ASTM D 3740-\	(1994a) Minimum Requirements for Agencies Engaged in the Testing and/or Inspection of Soil and Rock as Used in Engineering Design and Construction
\-ASTM E 329-\	(1993b) Agencies Engaged in the Testing and/or Inspection of Materials Used in Construction

UNITED STATES ENVIRONMENTAL PROTECTION AGENCY (USEPA)

\-EPA/540/G-90/001-\	(1990) Guidance on EPA Oversight of Remedial Designs and Remedial Actions Performed by Potentially Responsible Parties. Interim Final.

1.2. NOT USED

PART 2. PRODUCTS (Not Applicable)

PART 3. EXECUTION

3.1. GENERAL

The Contractor is responsible for quality control and shall establish and maintain an effective quality control system. The quality control system shall consist of plans, procedures, and organization necessary to produce an end product which complies with the contract requirements. The system shall cover all construction operations, both onsite and offsite, and shall be keyed to the proposed construction sequence. The project superintendent will be held responsible for the quality of work on the job and is subject to removal by the Contracting Officer for non-compliance with quality requirements specified in the contract. The project superintendent in this context shall mean the individual with the responsibility for the overall management of the project including quality and production.

3.2. QUALITY CONTROL PLAN

3.2.1. General

The Contractor shall furnish for review by the Contracting Officer, not later than 10 days after receipt of notice to proceed, the Contractor Quality Control (CQC) Plan. The plan shall identify personnel, procedures, control, instructions, test, records, and forms to be used. The Contracting Officer will consider an interim plan for the first 30 days of operation. Construction will be permitted to begin only after acceptance of the CQC Plan or acceptance of an interim plan applicable to the particular feature of work to be started. Work outside of the features of work included in an accepted interim plan will not be permitted to begin until acceptance of a CQC Plan or another interim plan containing the additional features of work to be started.

3.2.2. Content of the CQC Plan

The CQC Plan shall include, as a minimum, the following to cover all construction operations, both onsite and offsite, including work by subcontractors, fabricators, suppliers, and purchasing agents:

a. A description of the quality control organization, including a chart showing lines of authority and acknowledgment that the CQC staff shall implement the three phase control system for all aspects of the work specified. The staff shall include a CQC System Manager who shall report to the project superintendent.

b. The name, qualifications (in resume format), duties, responsibilities, and authorities of each person assigned a CQC function.

c. A copy of the letter to the CQC System Manager signed by an authorized official of the firm which describes the responsibilities and delegates sufficient authorities to adequately perform the functions of the CQC System Manager, including authority to stop work which is not in compliance with the contract. The CQC System Manager shall issue letters of direction to all other various quality control representatives outlining duties, authorities, and responsibilities. Copies of these letters will also be furnished to the Government.

d. Procedures for scheduling, reviewing, certifying, and managing submittals, including those of subcontractors, offsite fabricators, suppliers, and purchasing agents. These procedures shall be in accordance with SECTION \=01300=\ SUBMITTAL PROCEDURES.

e. Control, verification, and acceptance testing procedures for each specific test to include the test name, specification paragraph requiring test, feature of work to be tested, test frequency, and person responsible for each test. (Laboratory facilities will be approved by the Contracting Officer.)

f. Procedures for tracking preparatory, initial, and follow-up control phases and control, verification, and acceptance tests including documentation.

g. Procedures for tracking construction deficiencies from identification through acceptable corrective action. These procedures will establish verification that identified deficiencies have been corrected.

h. Reporting procedures, including proposed reporting formats.

i. A list of the definable features of work. A definable feature of work is a task which is separate and distinct from other tasks and has separate control requirements. It could be identified by different trades or disciplines, or it could be work by the same trade in a different environment. Although each section of the specifications may generally be considered as a definable feature of work, there are frequently more than one definable feature under a particular section. This list will be agreed upon during the coordination meeting.

3.2.3. Acceptance of Plan

Acceptance of the Contractor's plan is required prior to the start of construction. Acceptance is conditional and will be predicated on satisfactory performance during the construction. The Contracting Officer reserves the right to require the Contractor to make changes in the CQC Plan and operations including removal of personnel, as necessary, to obtain the quality specified.

3.2.4. Notification of Changes

After acceptance of the CQC Plan, the Contractor shall notify the Contracting Officer in writing of any proposed change. Proposed changes are subject to acceptance by the Contracting Officer.

3.3. COORDINATION MEETING

Prior to acceptance by the Contracting Officer of the CQC Plan, the Contractor shall meet with the Contracting Officer and discuss the Contractor's quality control system. The CQC Plan shall be submitted for review a minimum of 10 calendar days prior to the Coordination Meeting. During the meeting, a mutual understanding of the system details shall be developed, including the forms for recording the CQC operations, control activities, testing, administration of the system for both onsite and offsite work, and the interrelationship of Contractor's Management and control with the Contracting Officer's Quality Assurance. Minutes of the meeting shall be prepared by the Contracting Officer and signed by both the Contractor and the Contracting Officer. The minutes shall become a part of the contract file. There may be occasions when subsequent conferences will be called by either party to reconfirm mutual understandings and/or address deficiencies in the CQC system or procedures which may require corrective action by the Contractor.

3.4. QUALITY CONTROL ORGANIZATION

3.4.1. General

The requirements for the CQC organization are a CQC System Manager and sufficient number of additional qualified personnel to ensure contract compliance. The

Contractor shall provide a CQC organization which shall be at the site at all times during progress of the work and with complete authority to take any action necessary to ensure compliance with the contract. All CQC staff members shall be subject to acceptance by the Contracting Officer.

3.4.2. CQC System Manager

The Contractor shall identify as CQC System Manager an individual within his organization at the site of the work who shall be responsible for overall management of CQC and have the authority to act in all CQC matters for the Contractor. The CQC System Manager shall be a graduate engineer, graduate architect, or a graduate of construction management, with a minimum of 10 years construction experience on construction similar to this contract. This CQC System Manager shall be on the site at all times during construction and will be employed by the prime Contractor. The CQC System Manager shall be assigned no other duties. An alternate for the CQC System Manager will be identified in the plan to serve in the event of the System Manager's absence. The requirements for the alternate will be the same as for the designated CQC System Manager.

3.4.3. CQC Personnel

A staff shall be maintained under the direction of the CQC system manager to perform all QC activities. The staff must be of sufficient size to ensure adequate QC coverage of all work phases, work shifts, and work crews involved in the construction. These personnel may perform other duties, but must be fully qualified by experience and technical training to perform their assigned QC responsibilities and must be allowed sufficient time to carry out these responsibilities. The QC plan will clearly state the duties and responsibilities of each staff member. A Certified Industrial Hygienist and an Industrial Hygiene Technician shall be part of the Contractor's quality control staff on projects involving special or contaminated wastes removal per SECTION \=01110=\: SAFETY HEALTH AND EMERGENCY RESPONSE.

3.4.4. NOT USED

3.4.5. Organizational Changes

The Contractor shall maintain the CQC staff at full strength at all times. When it is necessary to make changes to the CQC staff the Contractor shall revise the CQC Plan to reflect the changes and submit the changes to the Contracting Officer for acceptance.

3.5. SUBMITTALS

Submittals shall be made as specified in SECTION \=01300=\ SUBMITTAL PROCEDURES. The CQC organization shall be responsible for certifying that all submittals are in compliance with the contract requirements.

3.6. CONTROL

Contractor Quality Control is the means by which the Contractor ensures that the construction, to include that of subcontractors and suppliers, complies with the requirements of the contract. At least three phases of control shall be conducted by the CQC System Manager for each definable feature of work as follows:

3.6.1. Preparatory Phase

This phase shall be performed prior to beginning work on each definable feature of work, after all required plans/documents/materials are approved/accepted, and after copies are at the work site. This phase shall include:

a. A review of each paragraph of applicable specifications.

b. A review of the contract drawings.

c. A check to assure that all materials and/or equipment have been tested, submitted, and approved.

d. Review of provisions that have been made to provide required control inspection and testing.

e. Examination of the work area to assure that all required preliminary work has been completed and is in compliance with the contract.

f. A physical examination of required materials, equipment, and sample work to assure that they are on hand, conform to approved shop drawings or submitted data, and are properly stored.

g. A review of the appropriate activity hazard analysis to assure safety requirements are met.

h. Discussion of procedures for controlling quality of the work including repetitive deficiencies. Document construction tolerances and workmanship standards for that feature of work.

i. A check to ensure that the portion of the plan for the work to be performed has been accepted by the Contracting Officer.

j. Discussion of the initial control phase.

k. The Contracting Officer shall be notified at least 48 hours in advance of beginning the preparatory control phase. This phase shall include a meeting conducted by the CQC System Manager and attended by the superintendent, other CQC personnel (as applicable), and the foreman responsible for the definable feature. The results of the preparatory phase actions shall be documented by separate minutes prepared by the CQC System Manager and attached to the daily CQC report. The Contractor shall instruct applicable workers as to the acceptable level of workmanship required in order to meet contract specifications.

3.6.2. Initial Phase

This phase shall be accomplished at the beginning of a definable feature of work. The following shall be accomplished:

a. A check of work to ensure that it is in full compliance with contract requirements. Review minutes of the preparatory meeting.

b. Verify adequacy of controls to ensure full contract compliance. Verify required control inspection and testing.

c. Establish level of workmanship and verify that it meets minimum acceptable workmanship standards. Compare with required sample panels as appropriate.

d. Resolve all differences.

e. Check safety to include compliance with and upgrading of the safety plan and activity hazard analysis. Review the activity analysis with each worker.

f. The Contracting Officer shall be notified at least 48 hours in advance of beginning the initial phase. Separate minutes of this phase shall be prepared by the CQC System Manager and attached to the daily CQC report. Exact location of initial phase shall be indicated for future reference and comparison with follow-up phases.

g. The initial phase should be repeated for each new crew to work onsite, or any time acceptable specified quality standards are not being met.

3.6.3. Follow-up Phase

Daily checks shall be performed to assure control activities, including control testing, are providing continued compliance with contract requirements, until completion of the particular feature of work. Each check performed shall be made a matter of record in the CQC documentation. Final follow-up checks shall be conducted and all deficiencies corrected prior to the start of additional features of work which may be affected by the deficient work. The Contractor shall not build upon or conceal non-conforming work.

3.6.4. Additional Preparatory and Initial Phases

Additional preparatory and initial phases shall be conducted on the same definable features of work if the quality of on-going work is unacceptable, if there are changes in the applicable CQC staff, onsite production supervision or work crew, if work on a definable feature is resumed after a substantial period of inactivity, or if other problems develop.

3.7. TESTS

3.7.1. Testing Procedure

The Contractor shall perform specified or required tests to verify that control measures are adequate to provide a product which conforms to contract requirements. Upon request, the Contractor shall furnish to the Contracting Officer duplicate samples of test specimens for possible testing by the Contracting Officer. Testing includes operation and/or acceptance tests when specified. The Contractor shall procure the services of a commercial testing laboratory or establish a testing laboratory at the project site. The Contractor shall perform the following activities and record and provide the following data:

a. Verify that testing procedures comply with contract requirements.

b. Verify that facilities and testing equipment are available and comply with testing standards.

c. Check test instrument calibration data against certified standards.

d. Verify that recording forms and test identification control number system, including all of the test documentation requirements, have been prepared.

e. Results of all tests taken, both passing and failing tests, will be recorded on the CQC report for the date taken. Specification paragraph reference, location where tests were taken, and the sequential control number identifying the test will be given. If approved by the Contracting Officer, actual test reports may be submitted later with a reference to the test number and date taken. An information copy of tests performed by an offsite or commercial test facility will be provided directly to the Contracting Officer. Failure to submit timely test reports as stated may result in nonpayment for related work performed and disapproval of the test facility for this contract.

3.7.2. Testing Laboratories

3.7.2.1. Capability Check

The Contracting Officer reserves the right to check laboratory equipment in the proposed laboratory for compliance with the standards set forth in the contract specifications and to check the laboratory technician's testing procedures and techniques. Laboratories utilized for testing soils, concrete, asphalt, and steel shall meet criteria detailed in \-ASTM D 3740-\ and \-ASTM E 329-\.

3.7.2.2. Capability Recheck

If the selected laboratory fails the capability check, the Contractor will be assessed the actual cost for the recheck to reimburse the Contracting Officer for each succeeding recheck of the laboratory or the checking of a subsequently selected laboratory. Such costs will be deducted from the contract amount due the Contractor.

3.7.3. On-Site Laboratory

The Contracting Officer reserves the right to utilize the Contractor's control testing laboratory and equipment to make assurance tests and to check the Contractor's testing procedures, techniques, and test results at no additional cost to the Contracting Officer.

3.7.4. Furnishing or Transportation of Samples for Testing

Costs incidental to the transportation of samples or materials will be borne by the Contractor.

3.8. COMPLETION INSPECTION

3.8.1. Punch-Out Inspection

At the completion of all work or any increment thereof as stated elsewhere in the specifications, the CQC System Manager shall conduct an inspection of the work and develop a "punch list" of items which do not conform to the approved drawings and specifications. Such a list of deficiencies shall be included in the CQC documentation, as required by PARAGRAPH: DOCUMENTATION below, and shall include the estimated date by which the deficiencies will be corrected. The CQC System Manager or staff shall make a second inspection to ascertain that all deficiencies have been corrected. Once this is accomplished the Contractor shall notify the Contracting Officer that the facility is complete and is ready for the Contracting Officer's "Prefinal" inspection.

3.8.2. Pre-Final Inspection

The Contracting Officer will perform this inspection to verify that the facility is complete and ready to be occupied. A Contracting Officer "Prefinal Punch List" will be developed as a result of this inspection. The Contractor's CQC System Manager shall ensure that all items on this list have been corrected and so notify the Contracting Officer so that a "Final" inspection with the customer can be scheduled. Any items noted on the "Pre-Final" inspection shall be corrected in a timely manner. These inspections and any deficiency corrections required by this paragraph will be accomplished within the time slated for completion of the entire work or any particular increment thereof if the project is divided into increments by separate completion dates.

3.8.3. Final Acceptance Inspection

The Contractor's Quality Control Inspection personnel, his superintendent or other primary management person and the Contracting Officer will be in attendance at this inspection. Additional Contracting Officer personnel or State or Federal regulatory officials may also be in attendance. The final acceptance inspection will be formally scheduled by the Contracting Officer based upon results of the Pre-Final Inspection. This notice will be given to the Contracting Officer at least 14 days prior to the final acceptance inspection and must include the Contractor's assurance that all specific items previously identified to the Contractor as being acceptable, along with all remaining work performed under the contract, will be complete and acceptable by the date scheduled for the final

acceptance inspection. Failure of the Contractor to have all contract work acceptably complete for this inspection will be cause for the Contracting Officer to bill the Contractor for the Contracting Officer's additional inspection cost in accordance with the contract clause entitled "Inspection of Construction".

3.9. DOCUMENTATION

The Contractor shall maintain current records providing factual evidence that required quality control activities and/or tests have been performed. These records shall include the work of subcontractors and suppliers and shall be on an acceptable form that includes, as a minimum, the following information:

a. Contractor/subcontractor and their area of responsibility.

b. Operating plant/equipment with hours worked, idle, or down for repair.

c. Work performed each day, giving location, description, and by whom. When Network Analysis (NAS) is used, identify each phase of work performed each day by NAS activity number.

d. Test and/or control activities performed with results and references to specifications/drawings requirements. The control phase should be identified (Preparatory, Initial, Follow-up). List deficiencies noted along with corrective action.

e. Quantity of materials received at the site with statement as to acceptability, storage, and reference to specifications/drawings requirements.

f. Submittals reviewed, with contract reference, by whom, and action taken.

g. Off-site surveillance activities, including actions taken.

h. Job safety evaluations stating what was checked, results, and instructions or corrective actions.

i. Instructions given/received and conflicts in plans and/or specifications.

j. Contractor's verification statement.

These records shall indicate a description of trades working on the project; the number of personnel working; weather conditions encountered; and any delays encountered. These records shall cover both conforming and deficient features and shall include a statement that equipment and materials incorporated in the work and workmanship comply with the contract. The original and one copy of these records in report form shall be furnished to the Contracting Officer's Representative on the first day following the date(s) covered by the report, except that reports need not be submitted for days on which no work is performed. As a minimum, one report shall be prepared and submitted for every seven days of no work and on the last day of a no work period. All calendar days shall be accounted for throughout the life of the contract. The first report following a day of no work shall be for that day only. Reports shall be signed and dated

by the CQC System Manager. The report from the CQC System Manager shall include copies of test reports and copies of reports prepared by all subordinate quality control personnel.

3.10. SAMPLE FORMS

Sample forms enclosed at the end of this section.

3.11. NOTIFICATION OF NONCOMPLIANCE

The Contracting Officer will notify the Contractor of any detected noncompliance with the foregoing requirements. The Contractor shall take immediate corrective action after receipt of such notice. Such notice, when delivered to the Contractor at the worksite, shall be deemed sufficient for the purpose of notification. If the Contractor fails or refuses to comply promptly, the Contracting Officer may issue an order stopping all or part of the work until satisfactory corrective action has been taken. No part of the time lost due to such stop orders shall be made the subject of claim for extension of time or for excess costs or damages by the Contractor.

_____
(FIRM NAME)

DAILY QUALITY CONTROL REPORT

Daily Report No.: _____ DATE: _____
Contract No. _____
Project Title & Location: _____
Weather: ____ Precipitation: _____ in. _____ Temp.:____ Min. ____ Max. ____

1. Contract/Subcontractors and Area of Responsibility:

NUMBER:	TRADE	HOURS	EMPLOYER	LOCATION/DESCRIPTION WORK

2. Operating Plant or Equipment. (Not hand tools)

Plant/Equipment	Date of Arrival/Departure	Date of Safety Check	Hours Used	Hours Idle	Hours Repair

3. Work Performed Today: (Indicate location and description of work performed by prime and/or subcontractors. When network analysis is used, identify work by NAS activity number).

4. Control Activities Performed:
Preparatory Inspections: (Identify feature of work and attach minutes).
Initial Inspections: (Identify feature of work and attach minutes).
Follow-Up Inspections: (List inspections performed, results of inspection compared to specification requirements, and corrective actions taken when deficiencies are noted).

5. Tests Performed and Test Results: (Identify test requirement by paragraph number in specifications and/or sheet number in plans).

6. Material Received: (Note inspection results and storage provided).

7. Submittals Reviewed:

(a) Submittal No.	(b) Spec/Plan Reference	(c) By Whom	(d) Action

8. Offsite Surveillance Activities, Including Action Taken:

9. Job Safety: (List items checked, results, instructions and corrective actions taken).

10. Remarks: (Instructions received or given. Conflict(s) in Plans and/or specifications. Delays encountered.).

Contractor's Verification: On behalf of the Contractor, I certify this report is complete and correct, and all materials and equipment used and work performed during this reporting period are in compliance with the contract plans and specifications, to the best of my knowledge, except as may be noted above.

CQC System Manager Date

SECTION 01460
SECURITY

INDEX

1. SCOPE
2. PERSONNEL
3. SITE ACCESS
4. SUBMITTALS
5. SITE SECURITY

1. SCOPE

This section describes site security measures to be implemented during construction.

2. PERSONNEL

2.1. The Contractor shall provide identification cards to on-site personnel and visitors authorized to enter the project site. These cards shall include the following:

a. Name of the individual.
b. Occupation.
c. Name of Employer.

2.2. The Contractor shall maintain a current list of authorized persons and submit copies of the updated list to the Contracting Officer on request, for information only.

3. SITE ACCESS

The Contractor shall be responsible for the control of all persons and vehicles entering and leaving the project site. Security personnel shall:

a. Require display of proper identification by each person. The Contractor shall remove from the site personnel not properly identified.
b. Require personnel to sign in upon entering the site and to sign out when leaving.
c. Maintain a log of all vehicles and equipment entering and leaving the site.
d. Allow no visitors without the approval of the Contracting Officer.
e. Maintain a log of visitors.
f. Require visitors to read the Contractor's Site-Specific Safety Plan and to sign the master copy of the plan. The signature acknowledges that the visitor understands the potential hazards associated with site entry.

4. SUBMITTALS

The following submittals are the responsibility of the Contractor. Contracting Officer approval is required for submittals with a "GA" designation; submittals

having a "FIO" designation are for information only. The following shall be submitted in accordance with SECTION \=01300=\: SUBMITTAL PROCEDURES:

SD-01 Data\

Site Security Plan\; *FIO*\

The Contractor shall submit a Security Plan to the Contracting Officer no later than 5 working days prior to the Pre-Work Conference. This plan shall address:

a. Number of security personnel.
b. Duties of security personnel (security personnel may be assigned other duties).
c. Name of security personnel.
d. Description of proposed daily security operation (e.g., walking patrols, gate control).
e. Provisions for conducting security checks, including method and frequency.
f. Description of how the following breaches of security will be handled: unauthorized personnel on the site, penetration of site boundary (e.g., broken fence), unauthorized persons attempting to gain access to the site.

5. SITE SECURITY

The Contractor shall be responsible for maintaining uninterrupted day and night (24-hour) security within the project area throughout the contract, including weekends and holidays. Security personnel will only be required during normal business hours. When no work is being performed, a locked security fence system that is effective in preventing trespass will be sufficient.

5.5.1. The Contractor shall post signs in the Hazardous Work Areas at conspicuous intervals: "WARNING, HAZARDOUS WORK AREA, DO NOT ENTER UNLESS AUTHORIZED."

5.5.2. The Contractor shall provide sufficient security personnel to implement and enforce the requirements of the SITE ACCESS paragraph, as well as to periodically inspect site facilities. The Contractor shall be responsible for ensuring that security personnel comply with the requirements of SECTION \=01110=\: SAFETY, HEALTH, AND EMERGENCY RESPONSE, including training and medical examinations as specified.

5.5.3. The Contractor shall be responsible for maintaining a log of all security incidents. This log shall be furnished to the Contracting Officer upon request.

5.5.4. The Contracting Officer will have the right of approval and rejection of any and all security personnel of the Contractor during the period of this project.

5.5.5. The Contractor shall contact law enforcement officials, emergency medical care units, local fire departments, and utility emergency teams to ascertain the type of response required to any emergency situation and to

coordinate the responses of the various units. A standard operating procedure describing security force response to foreseeable emergencies shall be developed. The Contractor shall also prepare a list of emergency points of contact, telephone numbers, etc. so that dependable responses can be executed.

5.5.6. The Contractor shall maintain a security post or office located near the main entrance to the site. This office shall have communication links to all supporting agencies as mentioned above.

5.5.7. The Contractor shall minimize personnel on-site. Off-duty personnel shall leave the site as soon as possible.

SECTION 01500

DECONTAMINATION AND DISPOSAL

INDEX

PART 1 GENERAL
1.1 REFERENCES
1.2 GENERAL
1.3 SUBMITTALS

PART 2 PRODUCTS

PART 3 EXECUTION
3.1 DECONTAMINATION
3.2 NOT USED
3.3 DISPOSAL

SECTION 01500

DECONTAMINATION AND DISPOSAL

PART 1 GENERAL

1.1 REFERENCES

The publications listed below form a part of this specification to the extent referenced. The publications are referred to in the text by the basic designation only.

CODE OF FEDERAL REGULATIONS - PROTECTION OF THE ENVIRONMENT - SUBCHAPTER I - SOLID WASTES.

40 CFR 260	Hazardous Waste Management System: General
40 CFR 261	Identification and Listing of Hazardous Waste
40 CFR 262	Standards Applicable to Generators of Hazardous Waste
40 CFR 263	Standards Applicable to Transporters of Hazardous Waste
40 CFR 264	Standards for Owners and Operators of Hazardous Waste Treatment, Storage, and Disposal facilities
40 CFR 265	Interim Status Standards for owners and Operators of Hazardous Waste Treatment, Storage, and Disposal Facilities

CODE OF FEDERAL REGULATIONS - TRANSPORTATION - SUBCHAPTER B - HAZARDOUS MATERIALS TRANSPORTATION AND PIPELINE SAFETY.

49 CFR 106	Rulemaking Procedures
49 CFR 107	Hazardous Materials Program Procedures

CODE OF FEDERAL REGULATIONS - TRANSPORTATION - SUBCHAPTER C - HAZARDOUS MATERIALS REGULATIONS.

49 CFR 171	General Information, Regulations, and Definitions
49 CFR 172	Hazardous Materials Tables and Hazardous Materials Communications Regulations
49 CFR 173	Shippers - General Requirements for Shipments and Packagings
49 CFR 174	Carriage by Rail
49 CFR 177	Carriage by Public Highway
49 CFR 178	Shipping Container Specifications

49 CFR 179 Specifications for Tank Cars

1.2 GENERAL

The Contractor shall furnish all labor, materials, and equipment necessary for the decontamination of equipment and disposal of washdown water following decontamination procedures, for collection, storage, hauling, treatment and disposal of decontamination water. The contractor shall provide collection tanks, as required for storage of all waters to be treated. The Contractor shall follow and implement the decontamination specifications as outlined in this section and SECTION \=01110=\: SAFETY, HEALTH AND EMERGENCY RESPONSE.

1.3 SUBMITTALS

The following submittals are the responsibility of the Contractor. Contracting Officer's approval is required for submittals with a "GA" designation; submittals having a "FIO" designation are for information only. The following shall be submitted in accordance with **SECTION:\=01300=\: SUBMITTAL PROCEDURES:**

SD-08 Statements

Personnel Decontamination Facility Location; *GA*

The Contractor shall submit a plan showing the Contractor's proposed location of the personnel decontamination facility location. The plan shall show all pertinent features located in the proposed area.

Personnel Decontamination Wastewater Plan; *GA*

The Contractor shall submit a wastewater disposal plan 30 calendar days prior to commencement of any construction that requires decontamination. The Contractor shall include in the plan the system to be used for the collection, storage, and transport of the wastewater from the personnel decontamination facility. The wastewater disposal plan shall outline the method the Contractor proposes to utilize to collect, store, transport and dispose of the wastewater from the personnel decontamination facility. The plan shall include a brief narrative, plan drawings showing locations of all pertinent features, and a brief summary of materials to be used. The plan shall also include any required permits or approval from State and Local Regulatory Authorities.

Vehicle & Bulky Debris Decontamination Wastewater Plan; *GA*

The Contractor shall submit a wastewater disposal plan 30 calendar days prior to commencement of construction of the equipment wastewater collection, and storage system. The wastewater plan shall outline the method the Contractor proposes to utilize to collect, store, and transport and dispose of the wastewater from the vehicle and bulky debris decontamination facility. The plan shall include a brief narrative, plan drawings showing locations of all pertinent features, and a brief summary of materials to be used. The plan shall also include any required permits or approval from State and Local Regulatory Authorities. The Contractor shall follow and implement the decontamination

specifications for vehicles and bulky debris as outlined in this section and in section \-01420-\: VEHICLE AND BULKY DEBRIS DECONTAMINATION.

PART 2 PRODUCTS

The Contractor shall be responsible for providing a temporary decontamination facility for both personnel decontamination and vehicle and bulky debris decontamination. The Contractor shall also be responsible for providing a temporary support facility for the decontamination facility. The support facility shall consist of equipment necessary for supply of water and the collection, storage, and conveyance of wastewaters.

PART 3 EXECUTION

3.1 DECONTAMINATION

3.1.1 General

All vehicles requiring decontamination shall be washed to the extent that visible soil is removed from the vehicle body and undercarriage and no visible tracking of soil onto roadways occurs, as determined by the Contracting Officer and according to Section: \-01420-\ VEHICLE AND BULK DEBRIS DECONTAMINATION. All other vehicles not requiring decontamination shall have gross mud and soil removed to prevent excessive tracking of soil onto roadways, as determined by the Contracting Officer. The Contractor shall describe in the Site Specific Health and Safety Plan (see section \-01110-\: SAFETY, HEALTH AND EMERGENCY RESPONSE) how equipment, personnel, and vehicle decontamination procedures shall be implemented.

Personnel decontamination procedures shall be followed by the Contractor as specified in section \-01110-\: SAFETY, HEALTH AND EMERGENCY RESPONSE.

3.1.2 Wastewater Minimization.

The Contractor shall be responsible for disposing of waste water collected from the decontamination facility.

3.1.3 Wastewater Disposal

The Contractor shall be responsible for the proper disposal of the wastewater generated by the personnel decontamination facility and from the vehicle and bulky debris decontamination facility including water from PPE decontamination. Wastewater shall be disposed under the foundation fill. Any wastewater remaining after the placement of the foundation fill shall be disposed off site. The Contractor shall also propose the method of disposal of wastewater from toilets. Wastewater disposal shall be in accordance with State and Federal disposal regulations and policies.

3.2 NOT USED.

3.3 DISPOSAL

The Contractor shall ensure that all disposal of wastes is in accordance with applicable Federal and State regulations. The Contractor shall report spills of waste immediately to the Contracting Officer and take immediate effective containment and cleanup action as necessary.

SECTION 01510

TOPOGRAPHIC SURVEY

PART 1 GENERAL
- 1.1. REFERENCES (Not Applicable)
- 1.2. SCOPE OF WORK
- 1.3. SUBMITTALS
- 1.4. SPECIFIC SURVEY REQUIREMENTS
- 1.5. DATABASES
- 1.6. METHOD FOR REQUIRED ACCURACY

PART 2 PRODUCTS (Not Applicable)

PART 3 EXECUTION
- 3.1. GROUND CONTROL
- 3.2. TOPOGRAPHIC MAPPING
- 3.3. DIGITAL DATA REQUIREMENTS

SECTION 01510

TOPOGRAPHIC SURVEY

PART 1. GENERAL

Work done under this contract consists of furnishing all services, labor, plant, equipment, fuels, electric energy, materials, transportation and supervision necessary to provide a topographic database of the indicated areas. All survey work shall be performed by or under the direct supervision of a Professional Land Surveyor registered in the State of Indiana using conventional ground surveying techniques.

1.1. REFERENCES (Not Applicable)

1.2. SCOPE OF WORK

The work consists of locating existing ground control and creating a topographic database of as-built conditions of the landfill. The mapping scale for each survey shall be 1 inch = 50 feet, with 1 foot contour interval mapping prepared for foundation and topsoil layers identified in paragraph 1.4, SPECIFIC SURVEY REQUIREMENTS. The horizontal coordinate system shall be Indiana State Plane coordinates based on the NAD83 datum. This coordinate system has been used for previous work at the site.

1.3. SUBMITTALS

Contracting Officer approval is required for submittals with a "GA" designation; submittals having an "FIO" designation are for information only. The following shall be submitted in accordance with specification section \=01300=\ SUBMITTAL PROCEDURES:

SD-01 Data\

Supporting Documentation\; *GA*\. (see paragraph 3.3.5.1)

CADD Files\; *GA*\. (see paragraph 3.3.5.3)

Coordinate Listing\; *GA*\. (see paragraph 3.3.5.4)

Reference Ties\; *GA*\. (see paragraph 3.3.5.5)

As-Built Coordinates for Piping Systems\; *GA*\. (see paragraph 1.4)

SD-04 Drawings\

Map Sheets\; *GA*\. (see paragraph 3.3.5.2)

1.4. SPECIFIC SURVEY REQUIREMENTS

All components/features listed in Tables 1 and 2 below shall be surveyed to determine X, Y, and Z coordinates during construction of the landfill. Each survey shall be based on the same ground control. Minimum thicknesses of cover layers are designated on construction drawings and included in individual specification sections for cover system components.

TABLE 1. LANDFILL COVER SYSTEM

COMPONENT	REQUIREMENT
Topsoil Layer	Top of topsoil layer. This survey shall be conducted as part of the Overlot Areas survey.
Overlot Areas	All areas modified during construction shall be included in the final topographic survey of the site to include roads, borrow areas, etc. Surveys shall extend to the site's perimeter fencing. No underwater surveys are required.

TABLE 2. OTHER COMPONENTS/FEATURES

COMPONENT/FEATURE	REQUIREMENT
Piping (Drainage and Landfill Gas Collection System)	Top of pipe coordinates at 50 feet intervals and at all pipe joints; top centerline and invert elevations of all manholes
Landfill Gas Extraction Wellheads	Coordinates of all vaults, manholes, and riser pipes
Groundwater Monitoring Wells	Monitoring well coordinates and elevations at the highest point on the uncapped casing and on adjacent ground.
Landfill Gas Monitoring Probes	Monitoring probe coordinates and elevations at the highest point on the uncapped casing and on adjacent ground.
Settlement Plates	Coordinates and elevations of all settlement gages

1.5. DATABASES

The survey data shall be collected as digital information so as to support an Intergraph database, the final mapping is required to be delivered in CADD format. A tabular database for control set and used during the survey is required. All X, Y, Z coordinates, descriptions, and reference ties shall be provided.

1.6. METHOD FOR REQUIRED ACCURACY

Mapping procedures shall result in a map scale of 1 inch = 50 feet with 1 foot contour intervals for each final product. The terrain surface shall be a Digital Terrain Model (.DTM) collected in such a fashion as to support processing as a Triangulated Irregular Network (.TIN), and contours generated from the resultant surface. The ground surface shall be collected as a .DTM with break-features and/or form-lines suitable for generation of 1 foot contours, with spot elevations accurate to National Map Accuracy Standards (NMAS). An Intergraph .DTM file shall be provided.

PART 2. PRODUCTS (Not Applicable)

PART 3. EXECUTION

3.1. GROUND CONTROL

Locate existing ground control and if necessary establish supplemental ground control with enough accuracy to support the mapping and database requirements. Control shall be developed using the existing State Plane grid. The vertical control reference datum shall be NAD83. Control coordinates shall be shown on the drawings.

3.1.1. Monumentation.

All newly established control station shall be properly monumented as indicated on the drawings.

3.1.2. Standards for Control.

Standards for Control are stated in NOAA-S/T 80-98. The control survey shall be established with third order type survey specifications as a guideline; final map accuracy is the controlling specification. Both horizontal and vertical control must be independently verified.

3.1.2.1. Equipment and Use.

Vertical control shall be established with spirit or self-leveling instruments. With the exception of a total station with a double compensator, trigonometric leveling or total stations shall not be used in setting vertical control or in determining the elevations. Horizontal control shall be established with equipment capable of producing the accuracies specified below.

3.1.2.2. Accuracy.

The project control survey shall meet or exceed the horizontal and vertical accuracy criteria as defined by the Standards of Accuracy and General Specifications of Geodetic Control Surveys established by the U.S. Department of Commerce. Horizontal control positions for this survey and/or monumentation shall be within third order accuracy and accomplished by those standards. The closing error of control leveling for this survey and/or monumentation shall not exceed 12.0 mm times the square root of K, where K is the kilometers of leveling. Three copies of computations for all control stations and bench marks shall be furnished to the Contracting Officer.

3.1.2.3. Side Shots.

Side shot control points shall be used as a last resort. The coordinates of points established by side shots shall be computed after the traverse has been computed and adjusted. Side shots shall be tied in from two different locations.

3.1.2.4. *Coordinate Listing*.

The horizontal and vertical coordinates of all control used or installed shall be provided in tabular form on 8-1/2" X 11" sheets. The coordinate system used shall be indicated on the sheets.

3.1.2.5. *Reference Ties*.

Provide descriptions showing at least 3 ties to all monuments set in the field. Approximate directions and measured distances shall be illustrated by a sketch. Coordinates and designation shall be shown on the reference or control sheet. If field features (trees, posts, etc.) are not available for ties, then witness posts shall be set. Fence posts or carsonite markers are suitable for this purpose.

3.1.3. Field Notes.

All field notes shall be recorded in hardbound field books. The leaves of the field books shall contain no less than 50 percent high grade rag stock (such as in K&E Field Book 82-0012). All notes shall be neatly entered and shall contain complete records of all field work done. Each notebook page used shall bear the date of the work recorded thereon and the first initials and last names of the personnel in the party shall be listed at the beginning of each days work. The first three pages of each book shall be used for an index. Every used page in the book shall be accounted for in the index. Electronic field book printouts are allowed as supplements or replacements if data collectors are utilized, but all of the stated information shall be shown and bound in book format.

3.2. TOPOGRAPHIC MAPPING

3.2.1. General.

All cover system components previously identified shall be surveyed at a density compatible with 1 inch = 50 feet accuracy and then mapped with a 1 foot contour

interval at a scale of 1 inch = 50 feet. The topographic mapping shall be done by conventional ground surveying techniques.

3.2.1.1. Annotation.

General annotation will include street names, building numbers, feature descriptions, and type of surface.

3.2.1.2. Symbology.

The map features shall be shown by appropriate symbology.

3.2.2. Planimetric Features.

All surface features within the area to be mapped shall be shown and identified on the 1 inch = 50 feet mapping. The phrase "surface features" is intended to include but is not limited to the following:

3.2.2.1. Surface Features.

Identify and map features within the landfill to include the toe of slope; crest of slope; centerline of anchor trenches; centerline of piping systems; vaults, manholes, and cleanouts; permanent drainage channels; settlement plates; and surfaced roads.

3.2.2.2. Non-Surface Features.

Non-surface features shall include cover system sub-drain piping and landfill gas collection system piping and tankage.

3.2.2.3. Horizontal Control.

Points shall be shown on the map by the proper symbol. Designation, coordinates and description shall be shown by text adjacent to the symbol or in the map margin. Text shall not be less than one-eighth inch high due to half-sizing requirements.

3.2.3. .DTM Collection.

3.2.3.1. .DTM.

Ground points shall be collected such that the .TIN, with break lines and form lines, constructed from the .DTM shall accurately represent the three dimensional surface of the area to be mapped. The collected data shall conform to NMAS and other specifications which are over and above NMAS that are included within this document. Ideally, the data shall form equilateral triangles between data points creating a faceted surface of the area to be mapped. Areas such as roads and ditches where this is not feasible are considered exceptions to the equilateral triangle point placement guideline.

3.2.3.2. .DTM Points.

The coordinates (X,Y,Z) of all topographically significant data points shall be recorded. This shall include all high and low points, saddle and slope breakpoints, and other points which influence the shape of the mapped surface.

3.2.3.3. Break Lines.

These are non-visible form lines, natural breaks or changes in grade of the terrain such as shelves, depressions, ditches, embankments, road centerlines and other slope break lines. These lines are required elements in the processing of .TIN models for contour generation and .DTM models for Intergraph digital surface generation.

3.2.3.4. Form Lines.

These are visible grade-change lines of planimetric features such as drainage centerlines, shorelines, curb lines, pavement edges and other features affecting the surface definition. These lines are required elements in the processing of .TIN models for contour generation and .DTM models for Intergraph digital surface generation.

3.2.4. Spot Elevations.

All spot elevations supporting visual interpretation of terrain elevation shall be provided and shown on final maps. The elevation value shall be displayed as text adjacent to an X placed on the spot elevation position or as text with the decimal point centered over the elevation position. The labeling technique shall be noted in the legend. Ground elevations on existing breaks or changes in grades shall be indicated, such as tops of hills, bottoms of ditches, saddles and embankment elevations, and any high or low elevations necessary for interpretation. All ground elevations shall be shown to the closest one-tenth of a foot (0.1). Structure elevations (roads, drainage structures, etc.) shall not be shown by text. All features within the CADD graphics files shall be snappable and shall show proper elevations and coordinates.

3.3. DIGITAL DATA REQUIREMENTS

3.3.1. General.

The project database shall be constructed such as to insure connectivity within data sets. Nodes shall be placed at all points of intersection (i.e. all arcs will intersect so as to prevent overshoots, under-shoots, and to insure closure of all relevant polygons). The database shall be built such that it fully supports Intergraph requirements.

3.3.2. Sheet Layout.

A data window approximately 26" x 28" shall be utilized on each sheet. Sheets shall match adjoining sheets along the data window lines. A sheet index comprised of main roads and features overlaid with the data window grid and sheet numbers shall be on each sheet in the right hand margin area. The appropriate

sheet shall be cross-hatched to indicate location. Sheets shall be windowed over the main file of data. Sheets shall be stored in separate files, referencing the main file.

3.3.3. Legend.

A legend shall be shown on each sheet in the right hand margin area. All symbols used for the mapping shall be shown and explained by text. If the legend is too large, symbols pertinent to each individual sheet shall be shown.

3.3.4. Notations.

Notes concerning the date of data collection, source of data, national map accuracy certification, source of utility information and any other pertinent statements shall be shown in the right hand margin area.

3.3.5. Topographic Mapping.

3.3.5.1. *Supporting Documentation*\.

Originals of all field books, sketches and computations. All of these items shall be suitably bound, and clearly marked and identified.

3.3.5.2. *Map Sheets*\.

All maps shall be plotted at a scale of 1 inch = 50 feet on 30 inch by 42 inch vellum sheets. The outside line of the sheet cell is 28 inches by 40 inches. One original copy of each final drawing shall be delivered to the Contracting Officer.

3.3.5.3. *CADD Files*\.

Three dimensional design files of topographic data shall be provided. Surface files shall be in Intergraph .DTM format. Data files shall be written to disk or 8mm cartridge tape using the UNIX CPIO command in a format readable by an Intergraph workstation. Three copies of all CADD Files shall be provided to the Contracting Officer.

3.3.5.4. *Coordinate Listing*\.

Tabular listing for all horizontal and vertical control shall be in accordance with paragraph 3.1.2.4.

3.3.5.5. *Reference Ties*\.

Descriptions shall be in accordance with paragraph 3.1.2.5.

SECTION 01520
PHOTOGRAPHIC DOCUMENTATION

INDEX

1. GENERAL REQUIREMENTS
2. SUBMITTALS
3. VIEWS REQUIRED
4. PRINTS
5. SLIDES
6. DELIVERY OF PRINTS AND SLIDES

1. GENERAL REQUIREMENTS

The Contractor shall provide: color prints with original negatives, and 35mm color slides taken during the project.

2. SUBMITTALS

The following submittals are the responsibility of the Contractor. Contracting Officer approval is required for submittals with a "GA" designation; submittals having a "FIO" designation are for information only. The following shall be submitted in accordance with SECTION \=01300=\: SUBMITTAL PROCEDURES:

SD-18 Records\

Prints with original negatives\; *FIO*\

35 mm color slides\; *FIO*\

3. VIEWS REQUIRED

3.1. AREAS AND ACTIVITIES

The following work areas are to be photographed.

3.1.1. General aerials of all construction and borrow areas.
3.1.2. Site before work begins.
3.1.3. NOT USED.
3.1.4. Staging areas and activities.
3.1.5. Support area.
3.1.6. NOT USED.
3.1.7. NOT USED.
3.1.8. NOT USED.
3.1.9. Site after work complete.

3.2. AERIAL PHOTOGRAPHY

All views shall be oblique shot thru an open window or door. A helicopter is preferred, but a small wing over aircraft may be used. The Contractor shall fly at an altitude between 800 feet and 1000 feet above ground or whatever altitude will provide a view of the entire site. Provide views from the south, southwest,

west, northwest, north, northeast, east, and southeast. The Contractor shall fly aerials prior to the start of construction, every 60 days during construction, and again at the completion of the project.

3.3. PROGRESS

The contractor shall photograph from various locations to illustrate condition of work and state of progress. As a minimum, photographs shall be taken twice a month with a minimum of 10 photographs taken each time the photographer is at the site.

3.4. SUCCESSIVE VIEWS

At successive periods of photography, the contractor shall take at least one photograph from the same overall view as previously used.

3.5. ADDITIONAL VIEWS

The contractor shall Coordinate with the Contracting Officer at each period of photography for instructions concerning views required.

4. PRINTS

The contractor shall provide the following print information

4.1. COLOR

4.1.1. Paper. Medium weight.
4.1.2. Finish. glossy, smooth finish.
4.1.3. Size. 5 in. x 7 in.

4.2. IDENTIFY EACH PRINT ON BACK:

4.2.1. Name of project.
4.2.2. Contract Number.
4.2.3. Orientation of view.
4.2.4. Date and time of exposure.
4.2.5. Name and address of photographer.
4.2.6. Brief description of activity.
4.2.7. Photographer's numbered identification of exposure.

4.3. ORIGINAL NEGATIVES.

Original negatives shall be in protective sleeves.

5. SLIDES

Slides shall consist of the following.

5.1. COLOR.

5.1.1. Type--35 mm. Kodachrome film is preferred, but Ektachrome or other film of equal quality may be used.

5.2. IDENTIFY EACH SLIDE

Each slide shall be identified by a number on slide and a corresponding field book, listing:

- **5.2.1.** Number of slide.
- **5.2.2.** Name of project.
- **5.2.3.** Contract Number.
- **5.2.4.** Orientation of view.
- **5.2.5.** Name and address of photographer.

6. DELIVERY OF PRINTS AND SLIDES

The Contractor shall deliver the color prints with original negatives, and 35mm slides to the Contracting Officer within 15 days of exposure. The Contractor shall submit two 35mm slides, and two prints of each view taken.

- **6.1.** Date and time.
- **6.2.** Name and address of photographer.
- **6.3.** Sufficient description of activity being taped.
- **6.4.** Orientation of view.

* * *

SECTION 01570

DISPOSAL OF WATER

INDEX

1. DISPOSAL OF WATER
1.1. SUBMITTALS
1.2. DISPOSAL OF WATER GENERATED DURING CONSTRUCTION DEWATERING
1.3. CRITERIA FOR DISPOSAL
1.4. EXCAVATION

SECTION 01570

DISPOSAL OF WATER

1. DISPOSAL OF WATER

1.1. SUBMITTALS

Contracting Officer approval is required for submittals with a "GA" designation; submittals having an "FIO" designation are for information only. The following shall be submitted in accordance with Section \=01300=\ SUBMITTAL PROCEDURES:

SD-01 Data\

Disposal plan\; *GA*\

1.2. DISPOSAL OF WATER GENERATED DURING CONSTRUCTION DEWATERING

1.2.1. Dewatering of Groundwater

For temporary dewatering of groundwater encountered during construction, the Contractor shall land apply all water generated in accordance with Paragraph: LAND APPLICATION.

1.3. CRITERIA FOR DISPOSAL

Prior to dewatering, the Contractor shall submit a *disposal plan*\ detailing the method of disposal for approval. The disposal plan for Land Application shall include a sketch showing the construction site and the proposed location of the disposal of generated water. The disposal plan shall include but not be limited to the date the discharge shall beginand the duration of discharge.

1.3.1. Land Application

Land Application shall follow State requirements, however no Federal, State, or local permit shall be necessary. "Land application" implies that the Contractor shall discharge water at a rate which allows the water to percolate into the soil. No sheeting action, soil erosion, discharge into storm sewers, defined drainage areas, or discharge into the "waters of the State" shall occur. Land application shall be conducted pursuant to CERCLA (Comprehensive Environmental Response, Compensation and Liability Act) Sections 120 and 121 and the National Contingency Plan. The land application shall be done entirely within the limits of the site.

1.4. EXCAVATION

All excavated materials from construction activities such as construction activities associated with landfill off gas treatment system and installation of the underground storage tank shall be temporarily stockpiled at least four feet from the edge of the excavation site. If warranted, excavated material shall be

backfilled into the excavation from which it was removed and shall not require testing. All excess soil shall be containerized to be taken to a location within the site limits. The Contractor shall dispose the excess soil underneath the foundation layer as random fill. The contractor shall contact the Contractor Officer for the disposal location. Backfilling shall be accomplished as defined in Section \=02222 EXCAVATION=\ TRENCHING AND BACKFILLING FOR UTILITIES SYSTEMS. Backfill for these sites shall be compacted to 90% of optimum density for cohesive soils and to 95% of relative density for cohesionless soil. Backfilled areas shall be graded such that water shall not accumulate or pond and shall readily drain from the site.

1.4.1. Training

The Contractor shall be responsible for ensuring all Contractor personnel that handle or are exposed to hazardous waste are trained in accordance with the applicable Federal, State, and local regulations.

SECTION 01600
PROJECT RECORD DOCUMENTS

INDEX

1. GENERAL REQUIREMENTS
2. SUBMITTALS
3. DOCUMENT REQUIREMENTS
4. MAINTENANCE OF DOCUMENTS
5. REFERENCE LIBRARY

1. GENERAL REQUIREMENTS

The Contractor shall prepare, maintain and submit project record documents as required by the Specifications.

2. SUBMITTALS

Contracting Officer approval is required for submittals with a "GA" designation; submittals having a "FIO" designation are for information only. The following shall be submitted in accordance with SECTION \=01300=\: SUBMITTAL PROCEDURES:

SD-18 Records\

Record Documents\; *GA*\

At the completion of field operations, the Contractor shall deliver record documents to the Contracting Officer. The submittal shall be accompanied with transmittal letter in duplicate, containing:

a. Date.
b. Project title and number.
c. Contractor's name and address.
d. Title and number of each record document.
e. Signature of Contractor's authorized representative.

3. DOCUMENT REQUIREMENTS

3.1. RECORD COPIES

The Contractor shall maintain at the site for the Contracting Officer one record copy of:

3.1.1. Drawings.
3.1.2. Specifications
3.1.3. Addenda.
3.1.4. Modifications to the Contract.
3.1.5. Contracting Officer's Field Orders or Written Instructions.
3.1.6. Daily Work Activity Summary Reports, Including:
3.1.6.1. Field Test Records.

3.1.6.2. Photographs.
3.1.6.3. Reports on any Emergency Response Actions.
3.1.6.4. Manifest Documents and Variance Reports.
3.1.6.5. Records of all Site Work, Including Quantities of Drums and Material Handled.
3.1.6.6. Chain-of-Custody Documents.
3.1.6.7. Truck-Load Tickets and Shipping Papers (Manifests).
3.1.6.8. All Laboratory Analytical Results.
3.1.6.9. Meteorological Records.
3.1.6.10. Daily Inspection Records for Staging/Storage Areas.
3.1.6.11. All Safety and Accident Incident Reports.
3.1.6.12. Reports on all Spill Accidents.
3.1.6.13. Daily Construction Quality Control Reports.
3.1.6.14. Other Items as may be required by the Contracting Officer.

3.1.7. Approved Site-specific Safety and Health Plan.

4. MAINTENANCE OF DOCUMENTS

4.1. GENERAL

The Contractor shall store documents and samples in the Contractor's field office apart from documents used for work. The Contractor shall:

4.1.1. Provide Files and Racks for Storage of Documents.
4.1.2. Provide Locking Cabinets or Secure Storage Space.

4.2. FILING

Documents and samples shall be filed to facilitate retrieval. Documents shall be maintained in a clean, dry, legible condition and in good order. Record documents shall not be used for work purposes.

4.3. ACTUAL WORK

The Contractor shall legibly mark drawings to record actual work, including:

4.3.1. Field Changes of Dimension and Detail.
4.3.2. Changes Made by Field Order or by Change Order.
4.3.3. Details not on Original Contract Drawings.

4.4. CHANGES

The Contractor shall legibly mark each section of the Specifications and Addenda to record changes made by Field Order or by Change Order.

4.5. AVAILABILITY

The Contractor shall make documents available at all times for inspection by the Contracting Officer.

4.6. QUALITY

All documents shall be of sufficient quality for clear and legible transfer to microfilm.

5. **REFERENCE LIBRARY.** The Contractor shall provide the following list of references. The references shall be available at all times for review by all site employees including Government personnel.

5.1. **NOT USED.**
5.2. Standard First Aid Manual, American Red Cross.
5.3. OSHA Safety and Health Standards, 29 CFR 1910 and 1926.
5.4. Final Plans and Construction Specifications.

SECTION 01630
DEMOBILIZATION AND PROJECT COMPLETION

INDEX

1. SCOPE
2. GENERAL REQUIREMENTS
3. UTILITIES
4. SECURITY

1. SCOPE

This section covers the activities that the Contractor must complete prior to final demobilization from the site.

2. GENERAL REQUIREMENTS

Work activities shall include the following:

2.1. Decontamination and removal from site of all Contractor equipment and materials.

2.2. Collection and disposal of all Contractor generated contaminated materials and equipment for which decontamination is inappropriate.

2.3. Demolition and disposal of decontamination pad and all appurtenances.

2.4. Removal of support area facilities and equipment.

3. UTILITIES

The Contractor shall disconnect and remove all temporary utilities from the site.

4. SECURITY

4.1. INSPECTION

The Contractor shall inspect the perimeter and security fences and repair any damaged portions of the fences or gates. The Contractor shall give prior notice to the Contracting Officer when this inspection will be performed.

4.2. LOCKS

Padlocks shall be provided for all gates and shall be of solid brass case with a minimum of four-pin tumbler locking mechanism. Shackle shall be hardened steel, and shall be 1/4-inch in diameter. Padlocks will be provided by the Contractor.

SECTION 01730

SITE OPERATION, MAINTENANCE, AND MONITORING MANUAL

INDEX

PART 1 GENERAL
1.1 DESCRIPTION OF WORK
1.2 SUBMITTALS AND REVIEWS
1.3 NOT USED
1.4 REQUIREMENTS, ORGANIZATION, AND GENERAL CONTENTS
1.5 **NOT USED**
1.6 FACTORY LEVEL OPERATION AND MAINTENANCE
1.7 MONITORING.

SECTION 01730

SITE OPERATION, MAINTENANCE, AND MONITORING MANUAL

PART 1 GENERAL

This specification covers requirements for the development of approved manual used for operation, maintenance, and monitoring of the cover system and appurtenances for Himco Dump Superfund Site. Manual shall be comprehensive, self-contained and tailored for the features and facilities pertinent to this site. A draft Operation, Maintenance, and Monitoring (OM&M) Manual is included as part of the contract documents for use as a framework for the Contractor's developed OM&M Manual.

1.1 DESCRIPTION OF WORK

The Contractor shall prepare approved sets of OM&M manuals. The manuals shall include all features of the remedial action at the site. The manuals shall include system descriptions, locations, startup procedures, normal operation, emergency operation, inspection procedures, contingency plan, and scheduled and unscheduled maintenance for both the landfill cover system and the landfill gas collection and treatment system. The manuals shall also include landfill gas and groundwater monitoring plans. Appendices to be prepared shall include, but not limited to, equipment and material manuals (compilation of vendor data), manufacturer's warranties, points-of-contact, and materials suppliers lists.

1.2 SUBMITTALS AND REVIEWS

The following submittals are the responsibility of the Contractor. Contracting Officer approval is required for submittals with a "GA" designation; submittals having a "FIO" designation are for information only. The following shall be submitted in accordance with SECTION \=01300=\: SUBMITTAL PROCEDURES:

SD-19 Operation, Maintenance, and Monitoring Manuals\

Format and Outline\; *GA*\

Within 90 days after Notice to Proceed the Contractor shall submit a proposed detailed outline, an example of the proposed format, sample of manual covers, and listing of documents, data, and other information to be used in preparation of the manuals. Review comments will be provided to the Contractor within 30 days of receipt of this submittal.

Draft Copies\; *GA*\

Two draft copies of the manuals shall be submitted for approval 120 calendar days before scheduled construction completion date. Review comments will be provided to the Contractor within 30 days of receipt of this submittal.

Draft Manual for Review\; *GA*\

One final copy of the manuals shall be submitted for approval within 60 calendar days before scheduled construction completion date. Review comments will be provided to the Contractor within 14 days of receipt of this submittal.

Final Manual\; *GA*\.

Ten (10) copies of the final manuals, with all review comments addressed, shall be furnished to the Contracting Officer not less than 30 days after the scheduled completion of construction.

1.3 NOT USED

1.4 REQUIREMENTS, ORGANIZATION, AND GENERAL CONTENTS

1.4.1 Technical Accuracy

The manual shall accurately describe the system, equipment, and functions. Technical errors or conflicting information will constitute reason for resubmittal of the manual.

1.4.2 Preparation

All information shall be bound in organized volumes. Material shall be written, rewritten, or reproduced to the extent necessary to properly organize and integrate it, and to provide complete and intelligible instructions.

1.4.2.1 Organization

The material shall be organized and assembled according to systems and subsystems. Contents shall be indexed, tabulated, and suitably cross-referenced to and between various volumes.

a. Use manufacturers' brochures, handbooks, parts lists, and similar documents.

b. Fold manufacturers' oversized brochures to 8-1/2" x 11" to permit insertion between covers of volumes.

c. Assemble OM&M instructions in several volumes; no single volume shall be thicker than 3 inches.

d. Text. The text shall be specific, concise, and clearly worded to be easily understood by personnel involved in the operation, maintenance, monitoring, and repair of the equipment. The manual shall be oriented toward operation, maintenance, monitoring and repair of the landfill cover system, landfill gas collection and treatment system, and all other appurtenances. Descriptive matter and theory should be limited to those technical details which are essential to a proper understanding of the system or equipment for satisfactory operation, maintenance, and repair.

e. Text. The manuals shall contain all technical specifications with all amendments and modifications.

f. As-Built Drawings. The manuals shall contain all contract site and technical drawings. The Contracting Officer shall be responsible for incorporating as-built drawing into the document when completed.

1.4.3 Content

Manuals shall contain the following data, as applicable, and provide adequate instructions for installation, operation, maintenance, repair, and parts data for logistics support of the system or equipment.

Front matter
General information
Operation
Emergency Operation
Preventative maintenance
Inspections
Groundwater Monitoring Plan
Landfill Gas Monitoring Plan
Contingency Plan
Troubleshooting
Corrective maintenance
Lubrication instructions
Drawings
Illustrations
Photographs
Diagrams
Notes, cautions, and warnings
Parts listings

1.4.3.1 Front Matter

Front matter shall normally be included as cover, title page, and table of contents. Succeeding volumes of a multi- volume manual shall repeat front matter.

a. Cover. The facility shall be identified on the cover by the name of the facility and location. If the manual is in more than one volume, the volume number, the total number of volumes in the set, and the general content shall be included on each cover. Covers for multiple volumes for a single facility shall be similar.

b. Title Page. The title page shall show the name of the preparing firm and the month and year of publishing. In addition, multivolume manuals shall show the general content on the title page.

c. Table of Contents. The table of contents shall be consistent with the manual format.

1.4.3.2 General Information

The manual shall include an overall description and purpose of the system or equipment. The functioning of the system or equipment and of its component parts shall be described. The description shall include the intended use, capabilities, and limitations of the system or equipment.

1.4.3.3 Operation

Operating instructions for the landfill gas collection and treatment system shall include routine and emergency procedures (manual, automatic, local, and remote), and safety precautions. When the equipment can be turned on-off from an operating console, limits to be observed in the starting, operating, stopping, or shutting down of the equipment or system shall be provided. When the equipment turn-on is complicated, the operator shall be referred to the turn-on and checkout chart. Adequate illustrative material shall be provided to identify and locate operating controls and indicating devices. The function of each operating control and indicating device shall be included.

1.4.3.4 Emergency Operation

Emergency operating instructions for the landfill gas collection and treatment system shall include alternate procedures to be followed when normal operation is not possible because of emergency conditions, such as power failure. Emergency operating instructions and procedures shall be located for quick and ready references.

1.4.3.5 Contingency Plan

Procedures to be implemented in the event of system failure or violation of performance standards to include a schedule for implementation.

1.4.3.6 Preventive Maintenance and Inspections

Preventive maintenance information shall be provided. Use of special tools, materials, and test equipment shall be specified, including model/type designation, as appropriate. The following procedures shall be stressed, if applicable.

a. Cleaning and Lubrication. Periodic cleaning and lubrication information, types of cleaning agents or lubricants required, recommended intervals, such as monthly, quarterly, semiannually, or hours of operation. Application points, type of lubricant and capacity (required amounts) shall be identified. Pictorial format for lubrication is desirable. Cleaning and lubrication required during repair, replacement, and reassembly shall also be covered.

b. Inspection. Instructions, including scheduling for inspection of equipment and the cover system and other site features for damage and wear shall be included. Tabular or chart form is preferred.

c. Performance and Adjustment Verification. Instructions shall be included for verification of the accuracy of equipment measurement devices needed to restore the equipment to its original state. These instructions shall provide complete step-by-step procedures which will enable the user to check the accuracy of the indications or readings. The location of test connections and the values expected at these points shall be included, preferably in illustrated form. Adjustment of built-in self-test features shall be included. Data shall include a list of the additional equipment required to accomplish the verification, such as temperature, vacuum, pressure, hydraulic, or pneumatic gages; voltmeters; ammeters, or frequency meters. The listing shall show methods of use or application, range scales, and specific minimum tolerances or percentages of accuracy. This generation is preferred in tabular format. Such headings as the following may be used:

NOMENCLATURE	PART/MODEL NO.	APPLICATION	RANGE	ACCURACY

d. Exercising Emergency Standby Equipment. The frequency and special procedures for exercising emergency standby equipment shall be included, as applicable.

1.4.3.7 Troubleshooting

Failures that might occur during operation of equipment or systems shall be listed. Troubleshooting data and fault isolation techniques shall state (a) the indication or symptom of trouble, (b) the sequential instructions necessary, including test hookups, to determine the cause, (c) special tests and test equipment, and (d) methods for returning the equipment to operating conditions. Information may be in chart form or in tabular format with appropriate headings.

1.4.3.8 Corrective Maintenance

Instructions shall be included, but not limited to, all removal, repair adjustment, and replacement procedures. Exploded and sectional views giving details of assemblies shall be provided, as necessary, to clarify the test. For mechanical items, dimensional information with tolerances, clearances, wear limits, maximum bolt-down torques, and in- place balancing or other means of reducing noise level, if required, shall be supplied. Requirements for cleaning and lubrication prior to reassembly shall be included, if critical. Information on the use of special tools and test equipment supplied with the equipment, as well as any cautions or warnings which must be observed to protect personnel and equipment, shall also be included.

1.4.3.9 Notes, Cautions, and Warnings

Notes, cautions, and warnings shall be used to emphasize important and critical instructions where necessary. Notes, cautions, and warnings shall immediately precede the applicable instructions and shall be selected as follows:

NOTE - concerns an operating procedure or condition which should be highlighted.

CAUTION - concerns an operating procedure or practice, which if not strictly observed, could result in damage to, or destruction of equipment.

WARNING - concerns an operating procedure or practice, which if not strictly observed, could result in a hazard to health, injury to personnel, or loss of life.

1.4.3.10 Parts Lists

Parts lists shall provide positive identification of parts necessary for support of the systems or equipment and shall include sufficient information to enable maintenance personnel to requisition replacement parts.

a. Systems or Top Assembly Lists. The parts list for a system shall identify all parts necessary to accomplish system opera-tions that are not already included (listed) with subsystem or equipment lists. Such parts to be listed would include, but not be limited to, such items as cable, pipe, flanges, feed-through devices for cables, connection or junction boxes, connection devices, and distribution panels.

b. Parts List Illustrations. Clear and legible illustrations are to identify component parts and parts relationships. Part numbers and part names may be shown on illustrations or separately listed. When the illustrations omit the part numbers and part names, both the illustrations and separate listings shall cross-reference illustrated part to listed part. Parts in the listing shall be grouped by systems, subsystems, and components.

1.4.3.11 Pollution Control

All pertinent pollution control information shall be included. The information may be in the form of operating instructions, maintenance instructions, or both, for prevention or correction of pollution.

1.4.4 Format

1.4.4.1 General Arrangement of Data

The data may be grouped by system, function, or location and the order of arrangement shall be consistent throughout the manual. Final determination of the arrangement of data shall be subject to approval of the Contracting Officer.

1.4.4.2 Illustrations

Manuals shall contain illustrations, drawings, or photographs necessary to locate and identify components of operational and maintenance significance. Where necessary for clarity, illustrations shall show configuration and the removal and disassembly of parts. The following shall be included: schematic diagrams which show the arrangement of component devices or parts; wiring diagrams which show the connections of the circuit arrangement; one-line diagrams of electrical power distribution systems and communications type systems; functional or block diagrams; and schematic piping diagrams which show the interconnection of components, of piping, tubing, or hose, and the direction and sequence of fluid flow, drawings, and photographs.

1.4.4.3 Warning Page

A warning page, consisting of the more vital warnings extracted from those shown throughout the manual, shall be used when care must be exercised in areas of potential danger, such as high voltage, radioactive material, toxic chemicals, flammable liquids, explosive materials, carcinogens, or high pressures. The warning page shall be placed on the inside cover or in front of the initial pages(s) of the manual.

1.4.4.4 Hazardous Locations and Classifications

A section discussing the hazardous locations and classifications of the facility shall be included. This section shall also include a statement that all work in these areas conforms to Article 500 of the National Electrical Code NFPA 70-1990. Areas can be defined by sketch and/or written description.

1.5 NOT USED

1.6 FACTORY LEVEL OPERATION AND MAINTENANCE

It is expected that there will be some maintenance, repair, or operating procedures which will not be feasible to perform in the field due to economic considerations, experience or training of field O&M personnel, lack of specialized tools or instrumentation. Manuals shall designate the level of expertise required for the more complex O&M work and identify any support equipment required beyond the usual items available to the Using Service.

1.7 MONITORING.

Develop groundwater, landfill gas, landfill settlement, and treatment facility emission monitoring plans. These plans shall meet State and Federal regulations for post-closure monitoring at the facility. These plans will include sampling locations, sampling strategies, chemical parameters, equipment, equipment calibration requirements, frequency, laboratory requirements, chemical data validation requirements, and all other applicable items required for a comprehensive sampling and analysis plans.

SECTION 01800
SITE OPERATION AND MAINTENANCE

INDEX

1. SCOPE
2. GENERAL REQUIREMENTS
3. SUBMITTALS
4. SITE INSPECTION, OPERATION, AND MAINTENANCE ACTIVITIES
5. ACCEPTANCE OF WORK

1. SCOPE. This section describes the Contractor's responsibilities for operation and maintenance activities for a period of 12 months after final acceptance of site construction remedial activities.

2. GENERAL REQUIREMENTS. The Contractor shall be responsible for conducting inspections of the site after completion of construction pursuant to the approved Operations Maintenance, and Monitoring Manual. Refer to Section \=01730=\ SITE OPERATIONS, MAINTENANCE, AND MONITORING MANUAL. The purpose of the inspections shall be to identify and perform required maintenance activities and to maintain the integrity of the landfill cover system and the landfill gas collection and treatment system. Specifically, the Contractor shall:

2.1. Maintain the integrity and effectiveness of the final grade, including making repairs to the final grade as necessary to correct the effects of settling, subsidence, erosion, or other damage.

2.2. Prevent storm water runoff from eroding or otherwise damaging the final grades and drainage ditches.

2.3. Maintain the access road and drainage ditches.

2.4. Maintain all hydrologic features, including drainage channels, culverts, and gabion structures. All features shall be maintained in their original condition and to their originally constructed grade.

2.5. Maintain the integrity and effectiveness of the chain link security fence.

2.6. Maintain ground water monitoring wells and landfill gas monitoring system.

2.7. Maintain and operate landfill gas collection and treatment systems.

2.8. Maintain all other project features.

3. SUBMITTALS.

Contracting Officer approval is required for submittals with a "GA" designation; submittals with an "FIO" designation are for information only. The following shall be submitted in accordance with Section \=01300=\ SUBMITTAL PROCEDURES:

SD-09 Reports

Inspection Reports; *FIO*.

The Contractor shall furnish copies of inspection reports within 7 calendar days after completion of all site inspections.

4. SITE INSPECTION, OPERATION, AND MAINTENANCE ACTIVITIES. The Contractor shall perform site inspections, operation, and maintenance activities pursuant to the approved Operations, Maintenance and Monitoring plan.

5. ACCEPTANCE OF WORK.

5.1. NOTIFICATION OF MAINTENANCE ACTIVITIES. The Contractor shall notify the Contracting Officer in writing at least 5 working days in advance of conducting major maintenance activities. Maintenance activities that can be conducted during the site inspection are considered minor maintenance activities and do not require Contracting Officer notification. The Contractor shall identify the maintenance activities to be conducted and the personnel, equipment, and materials that will be used to conduct the required maintenance. The Contracting Officer will approve the maintenance activity, or provide the Contractor with alternative specifications for the repairs to be conducted.

5.2. NOT USED

SECTION 02110

CLEARING AND GRUBBING

07/89

INDEX

PART 1 GENERAL
1.1 REFERENCES (Not Applicable)
1.2 DEFINITIONS

PART 2 PRODUCTS (Not Applicable)

PART 3 EXECUTION
3.1 CLEARING
3.2 GRUBBING
3.3 TREE REMOVAL
3.4 DISPOSAL OF MATERIALS

SECTION 02110

CLEARING AND GRUBBING
07/89

PART 1 GENERAL

1.1 REFERENCES (Not Applicable)

1.2 DEFINITIONS

1.2.1 Clearing

Clearing shall consist of the felling, trimming, and cutting of trees into sections and the satisfactory disposal of the trees and other vegetation designated for removal, including down timber, snags, brush, and rubbish occurring in the areas to be cleared.

1.2.2 Grubbing

Grubbing shall consist of the removal and disposal of stumps, roots larger than 3 inches in diameter, and matted roots from the designated grubbing areas.

PART 2 PRODUCTS (Not Applicable)

PART 3 EXECUTION

3.1 CLEARING

Trees, stumps, roots, brush, and other vegetation in areas to be cleared shall be cut off flush with or below the original ground surface, except such trees and vegetation as may be indicated or directed to be left standing. Trees and vegetation to be left standing shall be protected from damage incident to clearing, grubbing, and construction operations by the erection of barriers or by such other means as the circumstances require. Clearing shall also include the removal and disposal of structures that obtrude, encroach upon, or otherwise obstruct the work.

3.2 GRUBBING

Material to be grubbed, together with logs and other organic or metallic debris not suitable for foundation purposes, shall be removed to a depth of not less than 18 inches below the original surface level of the ground in areas indicated to be grubbed and in areas indicated as construction areas under this contract, such as areas for buildings, and areas to be paved. Depressions made by grubbing shall be filled with suitable material and compacted to make the surface conform with the original adjacent surface of the ground.

3.3 TREE REMOVAL

Where indicated or directed, trees and stumps that are designated as trees shall be removed from areas outside those areas designated for clearing and grubbing. This work shall include the felling of such trees and the removal of their stumps and roots as specified in paragraph GRUBBING. Trees shall be disposed of as specified in paragraph DISPOSAL OF MATERIALS.

3.4 DISPOSAL OF MATERIALS

Cleared and grubbed materials smaller then 4-inches in diameter shall be chipped, material larger than 4-inches in daimater shall be cut in lengths not to exceep 6 feet. All cleared and grubbed material shall be mixed with random fill and placed beneath the landfill cover system in accordance with Section \=02211=\ EXCAVATION, INTITIAL GRADING, AND RANDOM AND FOUNDATION FILL FOR LANDFILL COVER SYSTEMS.

SECTION 02210

GRADING

INDEX

PART 1 GENERAL
1.1 SUMMARY
1.2 REFERENCES
1.3 NOT USED
1.4 DEFINITIONS
1.5 SUBMITTALS

PART 2 PRODUCTS
2.1 BORROW MATERIAL

PART 3 EXECUTION
3.1 CONSERVATION OF TOPSOIL
3.2 EXCAVATION
3.3 EXCAVATION OF DITCHES
3.4 UTILIZATION OF EXCAVATED MATERIALS
3.5 BACKFILL ADJACENT TO STRUCTURES
3.6 PREPARATION OF GROUND SURFACE FOR FILL
3.7 FILLS AND EMBANKMENTS
3.8 COMPACTION
3.9 PLACING TOPSOIL
3.10 \+FIELD TESTING CONTROL+\
3.11 FINISHED EXCAVATION, FILLS, AND EMBANKMENTS
3.12 PROTECTION
3.13 ADJUSTMENT OF EXISTING STRUCTURES

SECTION 02210

GRADING

PART 1 GENERAL

1.1 SUMMARY

This section includes the grading requirements for all areas not included under Section \=02211=\ EXCAVATION, INITIAL GRADING, AND RANDOM AND FOUNDATION FILL FOR LANDFILL COVER SYSTEMS and Section \=02223=\ SELECT FILL AND TOPSOIL FOR LANDFILL COVERS.

1.2 REFERENCES

The publications listed below form a part of this specification to the extent referenced. The publications are referred to in the text by basic designation only.

AMERICAN SOCIETY FOR TESTING AND MATERIALS (ASTM)

\-ASTM D 422-\	(1963; R 1990) Particle-Size Analysis of Soils
\-ASTM D 1556-\	(1990; R 1996) Density and Unit Weight of Soil in Place by the Sand-Cone Method
\-ASTM D 1557-\	(1991) Laboratory Compaction Characteristics of Soil Using Modified Effort (56,000 ft-lbf/cu. ft. (2,700 kN-m/cu.m.))
\-ASTM D 2167-\	(1994) Density and Unit Weight of Soil in Place by the Rubber Balloon Method
\-ASTM D 2216-\	(1990) Laboratory Determination of Water (Moisture) Content of Soil, and Rock
\-ASTM D 2487-\	(1993) Classification of Soils for Engineering Purposes (Unified Soil Classification System)
\-ASTM D 2488-\	(1993) Description and Identification of Soils(Visual-Manual Procedure)
\-ASTM D 2922-\	(1991) Density of Soil and Soil-Aggregate in Place by Nuclear Methods (Shallow Depth)
\-ASTM D 3017-\	(1988; R 1993) Water Content of Soil and Rock in Place by Nuclear Methods (Shallow Depth)
\-ASTM D 4318-\	(1995a) Liquid Limit, Plastic Limit, and Plasticity Index of Soils

1.3 NOT USED

1.4 DEFINITIONS

1.4.1 *Suitable Materials*\

Suitable materials are materials that classify according to \-ASTM D 2487-\ as GW, GP, GC, GM, SW, SP, SC, SM, CL, CH, and ML. Lime and flyash shall also be considered as suitable materials when used as stabilizing agents.

1.4.2 Unsuitable Materials

Unsuitable materials include all materials that are not defined above as suitable materials. In addition, unsuitable materials are materials that classify according to \-ASTM D 2487-\ as MH, OH, Pt, and OL. Unsuitable materials also include all material that contains debris, refuse, roots, organic matter, frozen material, fine grained sedimentary rocks (i.e., shale, claystone, siltstone, mudstone, and marl) even though they may be intensely weathered, contamination from hazardous, toxic, biological or radiological substances, stone having a maximum dimension larger than 3 inches in any dimension, or other materials that are determined by the Contracting Officer as unsuitable for providing a stable subgrade or stable foundation for pavement. Otherwise suitable material which has excess moisture content shall not be classified as unsuitable material unless it cannot be dried by manipulation, aeration, or blending with other materials as determined by the Contracting Officer.

1.4.3 Cohesionless and Cohesive Materials

Cohesionless materials include materials classified in \-ASTM D 2487-\ as GW, GP, SW, and SP. Cohesive materials include materials classified as GC, SC, ML, CL, MH, and CH. Materials classified as GM and SM will be identified as cohesionless only when the fines are nonplastic.

1.4.4 Expansive Soils

Expansive soils are defined as soils that have a plasticity index greater than 24 and a liquid limit greater than 49 when tested in accordance with \-ASTM D 4318-\.

1.4.5 Non-expansive Soils

Non-expansive soils are defined as soils with a plasticity index less than or equal to 24 and a liquid limit less than or equal to 49 when tested in accordance with \-ASTM D 4318-\.

1.4.6 NOT USED

1.4.7 Acceptable Topsoil

See Section \=02223=\ SELECT FILL AND TOPSOIL FOR LANDFILL COVER for topsoil requirements.

1.4.8 Spot Subgrade Reinforcement Material

Spot subgrade reinforcement material includes sound, tough, durable crushed stone, slag or gravel, consisting of pieces varying from 1 inch to 3-1/2 inches in diameter, or other approved material, with necessary filler. When a finer material is necessary for filler, broken stone chips, screened gravel, or sand may be used to completely fill all voids.

1.4.9 Pavements

Pavements shall include all roads, walk areas, graveled parking or walk areas, or any other type of surfaced area for driving or walking.

1.4.10 Standard Frame and Grate or Cover

Standard frame and grate or cover shall mean heavy-duty type frame and grate or cover as a minimum.

1.4.11 Degree of Compaction

Degree of compaction shall be expressed as a percentage of the maximum density obtained by the test procedure presented in \-ASTM D 1557-\.

1.5 SUBMITTALS

Approval is required for submittals with a "GA" designation; submittals having an "FIO" designation are for information only. The following shall be submitted in accordance with Section \=01300=\ SUBMITTAL PROCEDURES:

SD-01 Data\

Disposal Facility\; *GA*\.

Location of disposal facility and appropriate documentation.

SD-08 Statements\

Field Testing Control\; *FIO*\.

Qualifications of the commercial testing laboratory who will be performing all testing in accordance with paragraph FIELD TESTING CONTROL.

SD-09 Reports\

Field Testing Control\; *FIO*\.

Suitable Materials\; *FIO*\.

Certified test reports and analysis certifying that the suitable materials proposed for use at the project site conform to the specified requirements, and for all tests conducted in accordance with paragraph FIELD TESTING CONTROL.

PART 2 PRODUCTS

2.1 BORROW MATERIAL

Borrow material shall be selected to meet requirements and conditions of the particular fill for which it is to be used. Necessary clearing, grubbing, disposal of debris, and satisfactory drainage of borrow pits shall be performed by the Contractor as incidental operations to the borrow excavation.

2.1.1 Selection

Borrow materials shall be obtained from the borrow areas shown or other approved sources . Borrow materials shall be subject to approval. Borrow material from approved sources on the project site may be obtained without payment of royalties. Spot subgrade reinforcement material shall be obtained from approved sources outside the limits of the project site at the Contractor's expense.

2.1.2 Chemical Quality Testing

All borrow material from off-site sources shall be sampled and analyzed by the Contractor for chemical contamination as specified in Section \=01402=\ CHEMICAL QUALITY MANAGMENT. If the off-site borrow material does not meet the criteria as specified in the Contractor Quality Control Plan and Section \=01402=\ CHEMICAL QUALITY MANAGMENT, the Contractor shall aquire borrow material from another source which meets the aforementioned criteria with no additional cost to the Contracting Office.

PART 3 EXECUTION

3.1 CONSERVATION OF TOPSOIL

Topsoil shall be removed 6 inches, without contamination with subsoil, and stockpiled convenient to areas for later application or at locations specified. Topsoil shall be removed and stored separate from other excavated materials and piled free of roots, stones, and other undesirable materials. Any surplus of topsoil from excavations and grading shall be removed from the site.

3.2 EXCAVATION

Excavation of every description, regardless of material encountered, within the grading limits of the project shall be performed to the lines and grades indicated . Suitable excavated material shall be transported to and placed in fill areas within the limits of the work. Unsuitable material encountered within the limits of the work shall be excavated below the grade shown and replaced with suitable material as directed. " Unsuitable material and surplus excavated material not required for fill shall be disposed of by the Contractor at his own expense and responsibility outside the limits of the project site . Disposal of materials outside the project site shall be in accordance with federal, state, and local regulations. The location of any *disposal facility*\ located outside of the limit of the project site shall be submitted to the Contracting

Officer prior to removal from the project site. The Contractor shall submit documentation from the disposal facility to verify that it is licensed to accept the material. No material shall be removed from the project site without prior approval from the Contracting Officer. The Contractor shall notify the Contracting Officer if any material to be disposed of is found to contain hazardous, toxic, biological or radiological substances. During construction, excavation and filling shall be performed in a manner and sequence that will utilize all suitable material from required excavation prior to obtaining material from borrow and will provide drainage at all times. Material required for fills in excess of that produced by excavation within the grading limits shall be excavated from the borrow areas indicated .

3.3 EXCAVATION OF DITCHES

Ditches shall be cut accurately to the cross sections and grades indicated. All roots, stumps, rock and foreign matter in the sides and bottom of ditches shall be cut to conform to the slope, grade, and shape of the section shown. Care shall be taken not to excavate ditches below the grades indicated. Excessive ditch excavation shall be backfilled to grade with suitable, thoroughly compacted material as directed. All ditches excavated under this section shall be maintained until final acceptance of the work. Suitable material excavated from ditches shall be placed in fill areas as directed. Unsuitable and excess excavated material shall be disposed of as specified above. No excavated material shall be deposited closer than 3 feet from the edges of the ditches.

3.4 UTILIZATION OF EXCAVATED MATERIALS

Suitable material removed from required excavation under this section shall be utilized in the formation of embankments, subgrades, shoulders, slopes, bedding, backfill for culverts and other structures, and for such other purposes as directed. No excavated material shall be wasted without the authorization of the Contracting Officer. Material authorized to be wasted shall be disposed of as directed and in such manner as not to obstruct the flow characteristics of any stream or to impair the efficiency or appearance of any structure. No excavated material shall be deposited at any time in a manner that may endanger a partly finished structure by direct pressure, by overloading banks contiguous to the operations, or that may in any other way be detrimental to the completed work.

3.5 BACKFILL ADJACENT TO STRUCTURES

Backfill adjacent to structures shall be placed and compacted uniformly in such manner as to prevent wedging action or eccentric loading upon or against the structures. Slopes bounding or within areas to be backfilled shall be stepped or serrated to prevent sliding of the fill. During backfilling operations and in the formation of embankments, equipment that will overload the structure in passing over and compacting these fills shall not be used. Backfill for culverts, and storm drains , including the bedding, shall conform to the additional requirements as specified in Section \=02720=\ STORM-DRAINAGE SYSTEM. Backfill for structures other than culverts and storm drains shall conform to the additional requirements in Section \=02222=\ EXCAVATION, TRENCHING, AND BACKFILLING FOR UTILITIES SYSTEMS.

3.6 PREPARATION OF GROUND SURFACE FOR FILL

All vegetation, such as roots, brush, heavy sods, heavy growth of grass, and all decayed vegetable matter, rubbish, and other unsuitable material within the area upon which fill is to be placed, shall be stripped or otherwise removed before the fill is started. In no case will unsuitable material remain in or under the fill area. Stumps, logs and roots more than 1-1/2 inch in diameter shall be excavated and removed to a depth not less than 18 inches below the original ground surface. Sloped ground surfaces steeper than one vertical to four horizontal on which fill is to be placed shall be plowed, stepped, or broken up, as directed, in such manner that the fill material will bond with the existing surface. Prepared surfaces on which compacted fill is to be placed shall be wetted or dried as may be required to obtain the specified moisture content and density.

3.7 FILLS AND EMBANKMENTS

Fills and embankments herein designated as fills shall be constructed at the locations and to lines and grades indicated on the drawings. The completed fill shall correspond to the shape of the typical sections shown on the drawings and shall meet the requirements of the particular case. Suitable material removed from the excavation shall be used in forming the necessary fill. Where otherwise suitable material is too wet, it shall be aerated or dried to provide the moisture content specified for compaction. The material shall be placed in successive horizontal layers of 8 inches to 12 inches in loose depth for the full width of the cross section, and compacted. Each layer shall be compacted before the overlaying lift is placed.

3.8 COMPACTION

Compaction shall be accomplished by means specified and to the following densities for various parts of the work. Deficiencies in construction shall be corrected by the Contractor at no additional cost.

3.8.1 Over-all or Overlot Areas

Each layer of fills constructed under this section except for topsoil shall be compacted to at least 90 percent of the maximum density as determined in paragraph Degree of Compaction. Cohesive soils shall be at a moisture content between 1 percent below and 4 percent above optimum moisture when compacted. Cohesionless soils shall be compacted at a moisture content as required to facilitate compaction without bulking.

3.8.2 Areas to Receive Pavements

All fills for paved areas shall be compacted as specified for OVER-ALL OR OVERLOT AREAS, with the following exception. The upper layer forming the subgrade for pavements in both cut and fill areas shall be compacted to at least 95 percent of maximum density as determined in paragraph Degree of Compaction.

3.8.2.1 Subgrade Preparation

The subgrade shall be shaped to line, grade and cross section with approved compaction equipment so as to provide a minimum compacted subgrade thickness of 6 inches. This operation shall include any reshaping, aeration, wetting, or drying required. Expansive cohesive soils shall be at a moisture content between 3 and 8 percent above optimum moisture when compacted. The moisture content of non-expansive cohesive soils shall be adjusted within the range 1 percent below to 3 percent above optimum moisture when compacted. Cohesionless soils shall be compacted as required to facilitate compaction without bulking. All unsuitable material shall be removed and replaced with suitable material from excavation or borrow or, if so directed, with spot subgrade reinforcement material, all as approved by the Contracting Officer. All boulders or ledge stone encountered in the excavation shall be removed or broken off to a depth of not less than 6 inches below the subgrade. The resulting area and all other low sections, holes, or depressions shall be brought to the required grade with suitable material and the entire subgrade shaped to line, grade and cross section and thoroughly compacted as herein provided. Subgrade compaction shall be extended to include the shoulders.

3.8.2.2 Spot Subgrade Reinforcement

The use of spot subgrade reinforcement material shall be at the direction of and subject to the approval of the Contracting Officer. Unsuitable subgrade materials shall be removed, the bottom of the resulting excavation shaped uniformly and compacted firmly to the density specified for subgrade, and the required provisions for adequate drainage shall be made. The subgrade reinforcement material shall then be placed in the prepared excavation, in layers of not more than 8 inches, which shall be spread and rammed until level with the surrounding subgrade surface. The voids shall then be filled with necessary finer selected material and the area rolled, or tamped if inaccessible to the roller. The filling and rolling or tamping shall be continued until the entire mass is thoroughly compacted to not less than the density of the surrounding or adjacent areas. The surface shall be finished to conform accurately to the grade and cross section shown on the drawings.

3.9 PLACING TOPSOIL

All ground areas disturbed by construction under this contract and not built over, paved or otherwise surfaced shall be topsoiled.

3.9.1 Clearing

Prior to placing topsoil, vegetation shall be removed from the area and the ground surface cleared of all other materials that would hinder proper grading, tillage or subsequent maintenance operations.

3.9.2 Grading

Previously constructed grades shall be repaired if necessary so that the areas to be topsoiled shall conform to the section indicated on the drawings upon completion of topsoil placement.

3.9.3 Tillage

Subsequent to the above grading, the areas to be top-soiled shall be thoroughly scarified by approved means to a depth of at least 3 inches for bonding of topsoil with subsoil. The work shall be performed only during periods when beneficial results are likely to be obtained. When conditions are such, by reason of drought, excessive moisture, or other factors, that satisfactory results are not likely to be obtained, the work will be stopped by the Contracting Officer and shall be resumed only when directed. Undulations or irregularities in the surface that would interfere with further construction operations or maintenance shall be leveled before the next specified operation.

3.9.4 Placing Topsoil

Topsoil shall be uniformly distributed on the designated areas and evenly spread to a minimum thickness of 6 inches. Spreading shall be performed in such manner that planting can proceed with little additional soil preparation or tillage. The resulting surface shall meet the finish surface requirements specified in the following paragraph: FINISHED EXCAVATION, FILLS AND EMBANKMENTS. Topsoil shall not be placed when the subgrade is frozen, excessively wet, extremely dry, or in a condition otherwise detrimental to proper grading or the proposed planting.

3.10 \+*FIELD TESTING CONTROL*\+\

3.10.1 Sampling and Testing

All quality control sampling and testing shall be performed by the Contractor in accordance with Section \=01440=\ CONTRACTOR QUALITY CONTROL and as specified herein.

3.10.2 Moisture-Density Determinations

Tests for determination of maximum density and optimum moisture shall be performed by the Contractor in accordance with \-ASTM D 1557-\, except that a mechanical tamper may be used provided the results are correlated with those obtained with the referenced hand tamper. Samples shall be representative of the materials to be placed. An optimum moisture-density curve shall be obtained for each principal type of material or combination of materials encountered or utilized. Results of these tests shall be the basis of control for compaction. The above testing shall include Atterberg limits, grain size determinations and specific gravity. A copy of these tests shall be furnished to the Contracting Officer with the construction quality control daily report.

3.10.3 Density Control

The Contractor shall adequately control his compaction operations by tests made in accordance with any of the following methods: \-ASTM D 1556-\, \-ASTM D 2167-\, or \-ASTM D 2922-\ and \-ASTM D 3017-\ to insure placement of materials within the limits of densities specified. When \-ASTM D 2922-\ is used, the calibration curves shall be checked, and adjusted if necessary, using the sand cone method as described in paragraph "Calibration" of \-ASTM D 2922-\. \-ASTM D 2922-\ results in a wet unit weight of soil and when using this method, \-ASTM D 3017-\ shall be used to determine the moisture content of the soil. The

calibration curves furnished with the moisture gauges shall be checked along with the density calibration checks as described in \-ASTM D 3017-\. The calibration checks of both the density and moisture gauges shall be made at the beginning of a job, on each different type of material encountered, at intervals as directed by the Contracting Officer. If \-ASTM D 2922-\ is used for field density control, there should be at least one test performed according to \-ASTM D 1556-\ per every 10 tests performed according to \-ASTM D 2922-\ for correlation of test results. One test shall be made for each 3,000 sq. yds. or less for each layer of specified depth, except areas to receive pavements, for which one test shall be made for each 1,000 sq. yds. or less for each layer. Additional tests shall be made as necessary. All test results shall be made available to the Contracting Officer. Acceptance tests may be made for verification of compliance; however, the Contractor shall not depend on such tests for his control of operations. Deficiencies in construction shall be corrected by the Contractor at no additional cost.

3.11 FINISHED EXCAVATION, FILLS, AND EMBANKMENTS

All areas covered by the project, including excavated and filled sections and adjacent transition areas, shall be uniformly smooth graded. The finished surface shall be reasonably smooth, compacted, and free from irregular surface changes. The degree of finish shall be that ordinarily obtainable from either blade-grader or scraper operations, except as otherwise specified. The finished surface shall be not more than 0.15 foot above or below the established grade or approved cross section and shall be free of depressed areas where water would pond. All ditches shall be finished so as to drain readily. The surface of embankments or excavated areas for road construction or other areas to be paved on which a base course or pavement is to be placed shall not vary more than 0.05 foot from the established grade and approved cross section.

3.12 PROTECTION

During construction, embankments and excavations shall be kept shaped and drained. Ditches and drains along the subgrade shall be maintained in such manner as to drain effectively at all times. Where ruts occur in the subgrade, the subgrade shall be brought to grade, reshaped if required, and recompacted prior to the placing of surfacing. The storage or stockpiling of materials on the subgrade will not be permitted. No surfacing shall be laid until the subgrade has been checked and approved, and in no case shall any surfacing be placed on a muddy subgrade or on one containing frost. Newly graded areas shall be protected from traffic and from erosion, and any settlement or washing away that may occur from any cause, prior to acceptance, shall be repaired and grades reestablished to the required elevations and slopes. All work shall be conducted in accordance with the environmental protection requirements of the contract.

3.12.1 Protection of Existing Service Lines and Utilities Structures

Existing utility lines that are shown on the drawings, or the locations of which are made known to the Contractor prior to excavation that are to be retained, as well as utility lines constructed during excavation operations, shall be protected from damage during excavation and backfilling, and if damaged, shall

be repaired by the Contractor at his expense. In the event that the Contractor damages any existing utility lines that are not shown, or the locations of which are not made known to the Contractor, report thereof shall be made immediately to the Contracting Officer. If determined that repairs are to be made by the Contractor, such repairs will be made. When utility lines that are to be removed or relocated are encountered within the area of operations, the Contractor shall notify the Contracting Officer in ample time for the necessary measures to be taken to prevent interruption of the service.

3.13 ADJUSTMENT OF EXISTING STRUCTURES

All manholes, valve boxes, or inlets of any nature within the project that do not conform to the new finish grade in either surfaced or unsurfaced areas shall be adjusted to the new finish grade. Where inlets, manholes, or valve boxes fall within a surfaced or unpaved roadway or parking, the existing frames and cover shall be removed and replaced with a heavy-duty frame and cover. The structure shall be adjusted as needed to fit the new conditions. All structures shall be of a type suitable for the intended use and shall conform to the requirements of the applicable section of these specifications.

SECTION 02211

EXCAVATION, INITIAL GRADING, AND RANDOM AND FOUNDATION FILL FOR LANDFILL COVER SYSTEMS

INDEX

PART 1 GENERAL
- 1.1 SUMMARY
- 1.2 REFERENCES
- 1.3 DEFINITIONS
- 1.4 SUBMITTALS
- 1.5 QUALIFICATIONS

PART 2 PRODUCTS
- 2.1 BORROW MATERIAL

PART 3 EXECUTION
- 3.1 PREPARATION OF GROUND SURFACE FOR FILL
- 3.2 PROTECTION OF EXISTING SERVICE LINES AND UTILITIES STRUCTURES
- 3.3 EQUIPMENT
- 3.4 CLEARED MATERIAL, LANDFILL EXCAVATION AND LANDFILL MATERIAL REGRADING
- 3.5 PROOF ROLLING
- 3.6 PLACEMENT OF RANDOM AND FOUNDATION FILL
- 3.7 COMPACTION OF RANDOM AND FOUNDATION FILL
- 3.8 FIELD TESTING CONTROL
- 3.9 COVERAGE
- 3.10 FINISHED FOUNDATION FILL
- 3.11 FINISHED EXCAVATION AND FILLS
- 3.12 SURVEYS

SECTION 02211

EXCAVATION, INITIAL GRADING, AND RANDOM AND FOUNDATION FILL FOR LANDFILL COVER SYSTEMS

PART 1 GENERAL

1.1 SUMMARY

This section includes the excavation and grading requirements for all landfilled areas. See SECTION \=02210=\ GRADING for grading requirements for all areas outside the limits of landfilled material and all access roads.

1.2 REFERENCES

The publications listed below form a part of this specification to the extent referenced. The publications are referred to in the text by basic designation only.

AMERICAN SOCIETY FOR TESTING AND MATERIALS (ASTM)

\-ASTM D 422-\	(1962; R1972) Particle-Size Analysis of Soils
\-ASTM D 698-\	(1991) Laboratory Compaction Characteristics of Soil Using Standard Effort (12,400 ft-lbf/cu. ft. (600 kN-m/cu.m.))
\-ASTM D 1556-\	(1990) Density and Unit Weight of Soil in Place by the Sand-Cone Method
\-ASTM D 1557-\	(1991) Laboratory Compaction Characteristics of Soil Using Modified Effort (56,000 ft-lbf/cu. ft. (2,700 kN-m/cu.m.))
\-ASTM D 2167-\	(1984, R 1990> Density and Unit Weight of Soil in Place by the Rubber Balloon Method
\-ASTM D 2487-\	(1993) Classification of Soils for Engineering Purposes (Unified Soil Classification System)
\-ASTM D 2922-\	(1991) Density of Soil and Soil-Aggregate in Place by Nuclear Methods (Shallow Depth)
\-ASTM D 3017-\	(1988; R 1993) Water Content of Soil and Rock in Place by Nuclear Methods (Shallow Depth)
\-ASTM D 4253-\	(1993) Maximum Index Density and Unit Weight of Soils Using a Vibratory Table.
\-ASTM D 4254-\	(1991) Minimum Index Density and Unit Weight and Calculation of Relative Density.

\-ASTM D 4318-\ (1993) Standard Test Method for Liquid Limit, Plastic Limit, and Plasticity Index of Soils.

1.3 DEFINITIONS

1.3.1 Suitable Materials

Suitable materials are materials that classify according to \-ASTM D 2487-\ as SW, SP, SC, SM, CL, or ML and meet the requirements for the fill where utilized.

1.3.2 Unsuitable Materials From Off-Site Borrow Sources

Unsuitable materials from off-site borrow sources (i.e., borrow sources outside of the Himco Dump Superfund Site boundaries) include all materials that are not defined in PARAGRAPH 1.3.1. as suitable materials. In addition, unsuitable materials are materials that classify according to \-ASTM D 2487-\ as MH, OH, CH, Pt, and OL. Unsuitable materials also include all material that contains debris, refuse, roots, organic matter, frozen material, fine grained sedimentary rocks (i.e., shale, claystone, siltstone, mudstone, and marl) even though they may be intensely weathered, contamination from hazardous, toxic, biological or radiological substances, stone having a maximum dimension larger than \~0.75 inches~\ in any dimension, or other materials that are determined by the Contracting Officer as unsuitable for providing a stable subgrade or stable foundation for the cover system. Otherwise suitable material which has excess moisture content shall be classified as unsuitable material if it cannot be dried by manipulation, aeration, or blending with other materials as determined by the Contracting Officer.

1.3.3 Unsuitable Materials From On-Site Borrow Sources

Unsuitable materials from on-site (inside of the Himco Dump Superfund Site boundaries) borrow sources include all materials that are not defined in PARAGRAPH 1.3.1. as suitable materials. Unsuitable materials also include all material that contains frozen material or other materials that are determined by the Contracting Officer as unsuitable for providing a stable subgrade or stable foundation for the cover system. Otherwise suitable material which has excess moisture content shall be classified as unsuitable material if it cannot be dried by manipulation, aeration, or blending with other materials as determined by the Contracting Officer.

1.3.4 Cohesionless and Cohesive Materials

Cohesionless materials include materials classified in \-ASTM D 2487-\ as GP, GW, SW and SP. Cohesive materials include materials classified as GC, SC, ML, CL, MH, and CH. Materials classified as GM and SM will be identified as cohesionless only when the fines are nonplastic.

1.3.5 Random Fill

Random fill placed below the foundation layer of the landfill cover system shall consist of suitable materials from on-site or off-site borrow sources.

1.3.6 Foundation Fill

Foundation fill shall consist of suitable material from on-site or off-site borrow sources that meet the gradation requirements in Table 1. Foundation fill shall be a silica based material. Carbonate based materials shall not be used. Foundation fill shall be free of trash, waste, calcium sulfate, debris, refuse, roots and stone having a maximum dimension larger than \~0.5 inches~\ in any dimension, or other materials that are determined by the Contracting Officer as unsuitable.

TABLE 1
FOUNDATION FILL MATERIAL GRADATION

Sieve Designation	Percent Passing (By Weight)
1/2-in	100
3/8-in	80-100
No. 8	55-100
No. 16	30-85
No. 30	20-65
No. 50	5-40
No. 200	0-10

1.4 SUBMITTALS

Contracting Officer approval is required for submittals with a "GA" designation; submittals having an "FIO" designation are for information only. The following shall be submitted in accordance with SECTION \=01300=\: SUBMITTAL PROCEDURES:

SD-08 Statements\

Qualifications\; *GA*\.

Qualifications of the commercial testing laboratory that will be performing all testing in accordance with PARAGRAPH: FIELD TESTING CONTROL.

Equipment\; *GA*\.

SD-09 Reports\

Classification Testing\; *GA*\. (Acceptance Testing of Borrow Material)

Chemical Quality Testing\; *GA*\. (Acceptance Testing of Borrow Material)

Landfill Excavation and Regrading Plan\; *GA*\

A description of the Contractors plan for excavation, regrading, surface water control, and compacting landfill material in accordance with PARAGRAPH: CLEARED MATERIAL, LANDFILL EXCAVATION AND LANDFILL MATERIAL REGRADING.

Inspection Trench Logs\; *FIO*\ .
Logs for the perimeter inspection trench in accordance with PARAGRAPH: PERIMETER INSPECTION TRENCHES.

Field Testing Control\; *GA*\. (Test results for all quality control testing.)

1.5 *QUALIFICATIONS*\

1.5.1 Quality Control (QC) Inspector

The QC Inspector shall be a person or company furnished by the Contractor who shall have the responsibility of performing inspections and testing for the purpose of monitoring and controlling the excavation, regrading, and fill placement activities.

1.5.2 Quality Control (QC) Laboratory

The Contractor shall retain a QC Laboratory for laboratory quality control testing.

PART 2 PRODUCTS

2.1 BORROW MATERIAL

Borrow material shall be selected to meet requirements and conditions of the particular fill for which it is to be used. Necessary clearing, grubbing, disposal of debris, and satisfactory drainage of borrow pits shall be performed by the Contractor as incidental operations to the borrow excavation.

2.1.1 Selection

Borrow materials shall be obtained from the borrow areas shown on the drawings and from sources outside the limits of the Himco Dump Superfund Site as required. The source of off-site borrow material shall be the Contractor's responsibility. Unless otherwise provided in the contract, the Contractor shall obtain from the owners the right to procure material, shall pay all royalties and other charges involved, and shall bear all the expense of developing the sources, including rights-of-way for hauling.

2.1.2 \+*Classification Testing*\+\

For each proposed off-site borrow area, the Contractor shall obtain one representative sample of each type of material proposed for use in random or foundation fill layers. Classification testing shall be performed on the representative sample of material and shall consist of USCS classification \-ASTM D 2487-\, Atterberg limits \-ASTM D 4318-\, and grain-size determination (Sieve analysis) \-ASTM D 422-\.

2.1.3 \+*Chemical Quality Testing*\+\

All borrow material from off-site sources shall be sampled and analyzed by the Contractor for chemical contamination as specified in SECTION \=01402=\: CHEMICAL QUALITY MANAGEMENT. If the off-site borrow material does not meet the criteria as specified in the Contractor Quality Control Plan and SECTION \=01402=\: CHEMICAL QUALITY MANAGEMENT, the Contractor shall acquire borrow material from another source which meets the aforementioned criteria with no additional cost to the Contracting Office.

PART 3 EXECUTION

3.1 PREPARATION OF GROUND SURFACE FOR FILL

All surface vegetation, such as brush, heavy growth of grass, and trees within the area upon which fill is to be placed shall be treated according to the SECTION \=02110=\: CLEARING AND GRUBBING, before fill is placed.

3.2 PROTECTION OF EXISTING SERVICE LINES AND UTILITIES STRUCTURES

Existing utility lines that are shown on the drawings, or the locations of which are made known to the Contractor prior to excavation that are to be retained, as well as utility lines constructed during excavation operations, shall be protected from damage during excavation and backfilling, and if damaged, shall be repaired by the Contractor at his expense. In the event that the Contractor damages any existing utility lines that are not shown, or the locations of which are not made known to the Contractor, report thereof shall be made immediately to the Contracting Officer.

3.3 *EQUIPMENT*\

Equipment and compaction procedures shall meet the requirements specified herein and shall be approved by the Contracting Officer.

3.4 CLEARED MATERIAL, LANDFILL EXCAVATION AND LANDFILL MATERIAL REGRADING

Extensive excavation, regrading, and recompaction of the existing landfill material shall be required within the landfill area in order to achieve the final lines and grades for ditches and landfill cover system as shown on the drawings. All cleared and grubbed material shall be chipped or cut prior to placement within the limits of the cover system in accordance with SECTION \=02110=\ CLEARING AND GRUBBING. The chipped or cut material shall be mixed with random fill material and spread in 16 inch thick loose lift(s) uniformly across the entire landfill surface during waste regrading and recompaction operations. All excavation, regrading, redistribution, and recompaction of the existing landfill materials, cleared and grubbed material, including daily cover requirements shall be performed in accordance with applicable local, State of Indiana, and Federal rules and regulations. The Contractor shall submit a *Landfill Excavation and Regrading Plan*\ that indicates the extent of excavation, regrading and placement locations of the regraded landfill materials. The plan shall address all health and safety concerns and precautions to be implemented during waste excavation,

placement, and regarding activities. The Plan shall include procedures for dust control, handling storm water run-on and run-off, daily cover procedures, and a schedule for landfill excavation and regrading, and demonstrate a full knowledge and consideration for all State rules and regulations and for all work and safety activities as required in SECTION \=01110=\: SAFETY HEALTH AND EMERGENCY RESPONSE and SECTION \=01432=\: PERIMETER AIR MONITORING. The *Landfill Excavation and Regrading Plan*\ shall be submitted a minimum of 21 days prior to any excavation activities at the site. The Contractor shall notify the Contracting Officer 48 hours prior to any landfill excavation or regrading. Under no circumstances shall the Contractor perform landfill excavation or grading without the Contracting Officers approval. Prior to placement of random fill, excluding random fill if utilized to satisfy daily cover requirements, excavated landfill material shall be spread within the limits of the final landfill cover in 16 inch thick loose lifts and compacted as specified in PARAGRAPH: PROOF ROLLING. The Contractor shall assure that the placement and compactive effort of excavated or regraded landfill material establishes a stable foundation and support for the final landfill cover system. Any slope instability or sloughing during placement and compaction shall be repaired by the Contractor at no additional cost to the Contracting Officer. All areas which are over-excavated below the grades specified shall be disposed of within the limits of the landfill cover system and backfilled with suitable material by the Contractor at no additional cost to the Contracting Officer. All material disposal shall be on-site under the foundation layer of the landfill cover system. After the landfill excavation, relocation, recompaction and proof rolling, the Contractor shall place random fill as specified in PARAGRAPH: PLACEMENT OF RANDOM AND FOUNDATION FILL.

3.4.1 Storm Water Control

Storm water shall be controlled and directed away from excavations and exposed landfill material to the greatest extent possible. Diversion ditches, dikes, detention ponds, and grading shall be maintained as necessary during construction to control storm water. Surface run-on and run-off that comes into contact with exposed waste shall be collected to prevent contamination of surface waters at the site. All storm water and leachate which appears in excavations or temporary detention structures shall be expediently collected by the Contractor and disposed of. All such water collected prior to completion of the foundation fill layer shall be applied to the surface of the exposed waste or random fill within the limits of the final landfill cap and allowed to infiltrate into the waste mass. Potentially contaminated water generated after completion of the foundation fill layer shall be collected, tested in accordance with SECTION \=01402=\ CHEMICAL QUALITY MANAGEMENT, treated if necessary, and disposed of off-site. If the collected water requires treatment, the landfill gas treatment facility should be utilized to the greatest extent possible to treat the liquid prior to off-site disposal. Contractor shall submit a plan for storm water control as part of the *Landfill Excavation and Regrading Plan*\.

3.4.2 Perimeter Inspection Trenches.

During the initial phase of landfill grading activities, the Contractor shall excavate inspection trenches along the entire perimeter of the landfill along the alignment of the perimeter drainage ditch and cover system subdrain ditch as

shown on the drawings. The inspection trench shall extend to a minimum of four (4) feet below the elevation of the cover system's geosynthetic clay liner or to groundwater, whichever is less. The inspection trenches will be used to determine the exact limits of landfill material. Any landfill material located below or to the outside of the west, east, or north sections of the trenches will be relocated to within the landfill area to be capped. Landfill material encountered beyond the final cover limits on the southern inspection trench from the cap access road "C" east to the gabion structure shall be left in place. The Contractor shall immediately notify the Contracting Officer if landfill materials are encountered in the inspection trenches. The inspection trenching procedures and schedule shall be discussed in the *Landfill Excavation and Regrading Plan*\. *Inspection Trench Logs*\ shall be submitted within 7 days of the conclusion of inspection trenching activities. At a minimum, the logs will have the following information:

a. Name of the project and site.
b. Trench identification number or name.
c. Trench location (beginning and end stationing or coordinates and sketch).
d. Date.
e. Elevations and depths below existing ground surface.
f. Description of materials encountered.
g. Depth of water/liquids if encountered.

3.5 PROOF ROLLING

All areas of the landfill subgrade prior to placement of any material shall be proof rolled with a minimum of 3 passes with the approved compaction equipment. Each lift of debris or trash, including all excavated or relocated landfill material and cleared and grubbed material mixed with random fill, shall be compacted using a minimum of 3 passes with the approved compaction equipment. Compaction equipment shall consist of a Caterpillar 816F or equivalent with respect to tamping foot depth, tamping foot surface area, and operating weight.

3.6 PLACEMENT OF RANDOM AND FOUNDATION FILL

Random fill shall be placed above the cleared material and excavated landfill material to the achieve the lines and grades for the foundation layer of the cover system as indicated on the drawings. The 12-inch thick foundation fill layer shall be placed immediately below the cover system's geosynthetic clay liner as indicated on the drawings. In most locations, the foundation layer will be placed directly on random fill. In some areas, the foundation layer may be placed directly above landfill material. Placement and compaction of waste materials, random fill, and foundation fill may progress simultaneously.

3.6.1 Cohesive Material

Cohesive material, if utilized for random fill, shall be spread in 12 inch thick loose lifts. Compaction of the first layer of random fill above the waste material shall consist of 3 passes of the approved compaction equipment. The first lift of material shall be treated as necessary to meet moisture requirements as defined in PARAGRAPH: MOISTURE AND DENSITY REQUIREMENTS. Each

subsequent layer of random fill shall be spread in 12 inch thick loose lifts, moisture conditioned and compacted to produce fill meeting the requirements in PARAGRAPH: MOISTURE AND DENSITY REQUIREMENTS.

3.6.2 Cohesionless Material

Cohesionless materials, if utilized for random fill, shall be spread in 18 inch thick loose lifts. Compaction of the first layer of random fill material above waste the material shall consist of 3 passes of approved compaction equipment. The first lift of material shall be treated as necessary to meet moisture requirements as defined in PARAGRAPH: MOISTURE AND DENSITY REQUIREMENTS. Each subsequent layer of random fill shall be placed in 18 inch thick loose lifts, moisture conditioned and compacted to produce fill meeting the requirements in PARAGRAPH: MOISTURE AND DENSITY REQUIREMENTS.

3.7 COMPACTION OF RANDOM AND FOUNDATION FILL

Compaction of random or foundation fill shall be accomplished by the means specified and to the specified densities and moisture contents contained herein. Deficiencies in construction shall be corrected by the Contractor.

3.7.1 Moisture and Density Requirements

The initial first lift of random fill is not subject to specific density requirements, but shall be compacted by 3 passes of the approved compaction equipment. All other layers of random fill shall be compacted to a density of at least 90 percent of the maximum density if the fill is constructed of cohesive materials as defined by \-ASTM D 698-\. For random fill constructed with cohesionless material and foundation fill, the soil shall be compacted with approved compaction equipment to a minimum relative density of 85 percent as defined by \-ASTM D 4253-\ and \-ASTM D 4254-\.

Cohesive materials shall be compacted with a moisture content within 3 percent of optimum moisture content as defined by \-ASTM D 698-\ at the time the compactive effort is applied. Cohesionless materials shall be drained prior to placement on the landfill area to minimize the potential production of leachate and/or contaminated surface runoff. The cohesionless material shall be dried to a point where water does not drain from the material during placement operations.

3.8 \+*FIELD TESTING CONTROL*\+\

3.8.1 Sampling and Testing

All quality control sampling and testing shall be performed by the Contractor is accordance with SECTION \=01440=\ CONTRACTOR QUALITY CONTROL and as specified herein.

3.8.2 Moisture-Density Determinations

For cohesive soils, tests for determination of maximum density and optimum moisture shall be performed by the Contractor in accordance with \-ASTM D 1557-\. One optimum moisture-density curve shall be obtained for each type of material or combination of materials utilized. Samples shall be representative of the materials placed. Results of these tests shall be the basis for control of compaction of cohesive soils. Classification testing shall be performed on each material tested in accordance with \-ASTM D 1557-\. Testing shall consist of USCS classification \-ASTM D 2487-\, Atterberg limits \-ASTM D 4318-\, and grain-size determination (Sieve analysis) \-ASTM D 422-\. A copy of test results shall be furnished to the Contracting Officer with the construction quality control daily report.

For cohesionless soils, tests for determination of maximum and minimum density shall be performed by the Contractor in accordance with \-ASTM D 4253-\ and \-ASTM D 4254-\, respectively. One set of these tests shall be performed for each type of material or combination of materials utilized. Samples shall be representative of the materials placed. Results of these tests shall be the basis of control for compaction for non-cohesive soils. Classification testing shall be performed on each material tested in accordance with \-ASTM D 4253-\ and \-ASTM D 4254-\. Testing shall consist of USCS classification \-ASTM D 2487-\ and grain-size determination (Sieve analysis) \-ASTM D 422-\. A copy of test results shall be furnished to the Contracting Officer with the construction quality control daily report.

3.8.3 Density Control

The Contractor shall adequately control compaction operations by tests made in accordance with any of the following methods: \-ASTM D 1556-\, \-ASTM D 2167-\, or \-ASTM D 2922-\ and \-ASTM D 3017-\ to insure placement of random fill materials within the limits of densities specified. When \-ASTM D 2922-\ is used, the calibration curves shall be checked, and adjusted if necessary, using the sand cone method as described in paragraph "Calibration" of \-ASTM D 2922-\. \-ASTM D 2922-\ results in a wet unit weight of soil and when using this method, \-ASTM D 3017-\ shall be used to determine the moisture content of the soil. The calibration curves furnished with the moisture gauges shall be checked along with the density calibration checks as described in \-ASTM D 3017-\. The calibration checks of both the density and moisture gauges shall be made at the beginning of a job, on each different type of material encountered, and at intervals as directed by the Contracting Officer. If \-ASTM D 2922-\ is used for field density control, one test shall be performed according to \-ASTM D 1556-\ for every 25 tests performed according to \-ASTM D 2922-\ for correlation of test results. One test shall be made for each 3,000 \~sq. yds.~\ or less for each random fill layer of specified depth. Additional tests shall be made as necessary. All test results shall be made available to the Contracting Officer. Acceptance tests may be made by the Contracting Officer for verification of compliance; however, the Contractor shall not depend on such tests for control of operations. Deficiencies in construction shall be corrected by the Contractor at no additional cost to the Contracting Officer. Copies of test results shall

be furnished to the Contracting Officer with the construction quality control daily report.

3.8.4 Foundation Fill Gradation Control

Grain-size determination \-ASTM D 422-\ (Sieve analysis) tests shall be performed at a rate of one test for every 9,000 \~sq. yds.~\ or less of foundation material placed. Additional tests shall be made as necessary. All test results shall be made available to the Contracting Officer. Acceptance tests may be made by the Contracting Officer for verification of compliance; however, the Contractor shall not depend on such tests for control of operations. Deficiencies in construction shall be corrected by the Contractor at no additional cost to the Contracting Officer. Copies of test results shall be furnished to the Contracting Officer with the construction quality control daily report.

3.9 COVERAGE

3.9.1 General

One complete pass shall consist of the entire coverage of the lift of material to be compacted by the approved compaction equipment. The equipment shall be operated so that the strip being traversed by the compaction equipment shall overlap the rolled adjacent strip. Dumping, spreading, moisture conditioning, and compacting may be performed at the same time at different points along a section when there is sufficient area to permit these operations to proceed simultaneously.

3.10 FINISHED FOUNDATION FILL

The foundation layer shall be free of all vegetation, rocks larger than 0.50 inches in diameter, protrusions greater than 0.50 inches, ruts, debris, and any other sharp object that could damage the overlying geosynthetics. Prior to placement of the geosynthetic clay liner, the foundation layer shall be proof rolled with a smooth-drum roller so as to provide a smooth foundation sufficient to permit the installation of the geosynthetic clay liner as specified in SECTION \=02442=\: GEOSYNTHETIC CLAY LINER. The foundation surface shall be observed daily by the Contractor to evaluate surface conditions. Any damage to the foundation surface shall be repaired by the Contractor prior to installation of the geosynthetic clay liner.

3.11 FINISHED EXCAVATION AND FILLS

All areas covered by the project, including excavated and filled sections and adjacent transition areas, shall be uniformly smooth graded. The finished surface shall be reasonably smooth, compacted, and free from irregular surface changes. The degree of finish shall be that ordinarily obtainable from either blade-grader or scraper operations, except as otherwise specified. The finished surface shall be not more than \~0.15 foot~\ above or below the established grade or approved cross section and shall be free of depressed areas where water would pond. All ditches shall be finished so as to readily drain.

3.12 SURVEYS

Topographic surveys of the finished foundation layer and topsoil layer shall be performed in accordance with SECTION \=01510=\ TOPOGRAPHIC SURVEY.

SECTION 02221
WIRE MESH GABIONS

INDEX

1. **SCOPE**
2. **APPLICABLE PUBLICATIONS**
3. **GENERAL**
4. **DESCRIPTION**
5. **MATERIALS**
6. **FOUNDATION PREPARATION**
7. **NOT USED**
8. **FABRICATION**
9. **ASSEMBLY AND INSTALLATION**
10. **SUBMITTALS**

1. **SCOPE.** This section, in conjunction with the contract drawings, covers wire mesh gabions complete.

2. **APPLICABLE PUBLICATIONS.** The following publications listed below form a part of this specification to the extent referenced. The publications are referred to in the text by the basic designation only.

2.1. **FEDERAL SPECIFICATIONS (FED. SPEC.).**

QQ-W-461g	Wire, Steel, Carbon (Round, Bare, and Coated)

2.2. **AMERICAN SOCIETY FOR TESTING AND MATERIALS (ASTM).**

ASTM A90	Weight of Coating on Zinc-Coated Iron or Steel Articles
ASTM A239	Locating the Thinnest Spot in a Zinc (Galvanized) Coating on Iron or Steel Articles by the Preece Test (Copper Sulfate Dip)

3. **GENERAL.** The work under this specification includes furnishing, assembling, filling, tying, and placing open wire mesh rectangular compartmented gabions placed on a prepared surface of bedding material as specified herein, and in accordance with the lines, grades and dimensions shown on the drawings or otherwise established in the field by the Contracting Officer. Grading for gabions shall be performed as needed in accordance with SECTION: \=02210=\GRADING and SECTION \=02211=\ EXCAVATION, INITIAL GRADING, AND RANDOM AND FOUNDATION FILL FOR LANDFILL COVER SYSTEMS. As shown on the drawings, gabions will be placed directly on the geocomposite layer of the landfill cover system and also on geocomposite outside of the limits of the landfill cover system.

4. **DESCRIPTION.** As described in this specification, gabion units consist of compartmented rectangular basket containers with a minimum dimension of 12-inches, fabricated from galvanized steel triple twisted wire mesh with hexagonal openings, and filled with stone.

5. **MATERIALS.**

5.1. ***GALVANIZED STEEL WIRE MESH GABIONS*\.** Gabion basket units shall be of nonraveling construction and fabricated from a triple twisted hexagonal mesh of hot dipped galvanized steel wire having a minimum diameter of 0.118-inches after

galvanization. The steel wire used shall be galvanized prior to fabrication into mesh. All gabion diaphragm and frame wire shall equal or exceed Fed. Spec. QQ-W-461, possess medium tensile strength, and a Finish 5 Class 3 zinc coating of not less than 0.80 oz/sq. ft. of uncoated wire surface. The weight of zinc coating shall be as determined by ASTM test designation A90. The uniformity of coating shall equal or exceed four one-minute dips by the Preece Test, ASTM test designation A239. Mesh openings shall be hexagonal in shape, and uniform in size measuring not more than approximately 3-1/4-inches by 4-1/2-inches. Selvedge or perimeter basket frame wire shall be of heavier gauge than the wire mesh with a minimum diameter after galvanization of 0.150 -inches. Wire used for lacing or as internal connecting wire within basket cells may be of soft tensile strength and of lighter gauge with a minimum diameter after galvanization of 0.0866-inches. The Contractor shall submit catalog data and a certificate of compliance for the Gabion units and components.

5.2. STONE FILL.

5.2.1. *Stone Quality*. Stone shall be durable and of suitable quality to insure permanence in the structure and climate in which it is to be used. It shall be free of cracks, seams, and other defects that would tend to increase unduly its deterioration from natural causes or reduce its size to that which could not be retained in the gabion baskets. The inclusion of objectionable quantities of dirt, sand, clay, and rock fines will not be permitted. The sources from which the Contractor proposes to obtain the material shall be selected well in advance of the time when the material will be required is the work. Suitable samples of stone fill material shall be submitted to the Contracting Officer for approval prior to delivery of any such material to the site of the work. Unless otherwise specified, all test samples shall be obtained by the Contractor and delivered at his expense to the Contracting Officer at the job site at least 30 days in advance of the time when the placing of the stone-filled gabions is expected to begin. Suitable tests and service records will be used to determine the acceptability of the stone. In the event suitable test reports and service records are not available, as in the case of newly operated sources, the material shall be subjected to such tests as are necessary to determine its acceptability for use in the work. Tests to which the material may be subjected include petrographic analysis, specific gravity, absorption, wetting and drying, freezing, thawing and such other tests as may be considered necessary to demonstrate to the satisfaction of the Contracting Officer that the materials are acceptable for use in the work. All tests will be made by or under the supervision of the Contractor and at the Contractor's expense.

5.2.2. Gradation. Stone fill used in the gabions shall be a well-graded mixture with sizes ranging between 4-inches and 8-inches, based on U.S. Standard square mesh sieves. No stone shall have minimum dimension less than 3-inches.

5.3. *ACCEPTANCE REQUIREMENTS*. For each shipment of materials to the site, the Contractor shall furnish the Contracting Officer, in duplicate, a manufacturer's certificate or affidavit signed by a legally authorized official from the company manufacturing the gabion units, that all material contained within that shipment meets the composition, physical, and manufacturing requirements stated in this specification.

6. FOUNDATION PREPARATION. Grading for gabions shall be performed as needed in accordance with SECTIONS: \=02210=\ GRADING; \=02211=\ EXCAVATION, INITIAL

GRADING, AND RANDOM AND FOUNDATION FILL FOR LANDFILL COVER SYSTEMS; and \=02223=\ SELECT FILL AND TOPSOIL FOR LANDFILL COVERS: After excavation or stripping to the extent indicated on the drawings or as directed by the Contracting Officer, remaining loose or otherwise unsuitable materials shall be removed and all depressions carefully backfilled and compacted using suitable materials. Any buried debris protruding from the foundation that will impede the proper installation and final appearance of the gabion layer shall also be removed, and the voids carefully backfilled and compacted. The prepared foundation surface shall be inspected by the Contracting Officer, and no material shall be placed thereon until that area has been approved.

7. NOT USED.

8. FABRICATION.

8.1. GALVANIZED STEEL WIRE MESH GABIONS. Gabions shall be fabricated in such a manner that the sides, ends, lid, and diaphragms can be assembled at the construction site into rectangular baskets of the sizes specified and shown on the drawings. Gabions shall be of single unit construction, i.e., the base, lid, ends, and sides shall be either woven into a single unit or one edge of these members connected to the base section of the gabion in such a manner that strength and flexibility at the point of connection is at least equal to that of the mesh. Where the length of the gabion exceeds one and one-half its horizontal width, the gabion shall be equally divided by diaphragms of the same mesh and gauge as the body of the gabions, into cells whose length does not exceed the horizontal width. The gabion shall be furnished with the necessary diaphragms secured in proper position on the base in such a manner that no additional tying at this juncture will be necessary. All perimeter edges of the mesh forming the gabion shall be securely selvedged so that the joints formed by tying the selvedges have at least the same strengths as the body of the mesh. Lacing wire or connecting wire shall be supplied in sufficient quantity for securely fastening all diaphragms and edges of the gabion.

9. ASSEMBLY AND INSTALLATION. Empty gabion units shall be assembled individually and placed on the approved surface to the existing slopes called for on the drawings or as directed by the Contracting Officer, with the sides, ends, and diaphragms erected in such a manner to insure the correct position of all creases and that the tops of all sides are level. All adjoining empty gabion units must be connected by tie wire lacing along the perimeter of their contact surfaces in order to obtain a monolithic structure. Lacing of adjoining basket units shall be accomplished by continuous stitching with alternating single and double loops at intervals of not more than 5-inches. All lacing wire terminals shall be securely fastened. The use of expedient clip connections for this purpose as final lid closing will not be permitted. The initial line of basket units shall be placed on the prepared surface in a direction parallel to flow, and partially filled to provide anchorage against deformation and displacement during filling operations. After adjoining empty basket units are set to line and grade and common sides with adjacent units thoroughly laced, they shall be placed in tension and stretched to remove any kinks from the mesh and to a uniform alignment. The stretching of empty basket units shall be accomplished in such a manner as to prevent any possible unraveling. Stone filling operations shall carefully proceed with placement by hand or machine so as not to damage

galvanized wire coating, or underlying cover system construction, to assure a minimum of voids between the stones, and the maintenance of alignment throughout the filling process. Undue bulging of the mesh shall be avoided. To avoid localized deformation, the basket units in any row are to be filled in stages consisting of maximum 12-inch courses, and at no time shall any cell be filled to a depth exceeding one foot more than the adjoining cell. The maximum height from which the stone may be dropped into the basket units shall be 12-inches. Along all exposed faces, the outer layer of stone shall be carefully placed and arranged by hand to insure a neat and compact appearance. The last layer of stone shall be levelled with the top of the gabion to allow for the proper closing of the lid and to provide an even surface that is uniform in appearance. Lids shall be stretched tight over the stone fill using crowbars or lid closing tools, until the lid meets the perimeter edges of the front and end panels. The lid shall then be tightly laced with tie wire along all edges, ends, and internal cell diaphragms by continuous stitching with alternating single and double loops at intervals of not more than 5-inches. Special attention shall be given to see that all projections or wire ends are turned into the baskets. Where shown on the drawings or as directed by the Contracting Officer, or where a complete gabion unit cannot be installed because of space limitations, the basket unit shall be cut, folded, and wired together to suit existing site conditions. The mesh must be cleanly cut and the surplus mesh cut out completely, or folded back and neatly wired to an adjacent gabion face. The assembling, installation, filling, lid closing, and lacing of the reshaped gabion units shall be carried out as specified above. Geocomposite shall be placed beneath, around the perimeter including the ends, and wrapped as shown on the drawings. Any damage to the geosynthetic layers of the landfill cover system will be repaired by the Contractor at the Contractor's expense.

10. SUBMITTALS. Contracting Officer approval is required for submittals with a "GA" designation; submittals having an "FIO" designation are for information only. The following shall be submitted in accordance with Section \=01300=\ SUBMITTAL PROCEDURES:

SD-08 STATEMENTS\
TESTS AND SERVICE RECORDS OF STONE\; *FIO*\.
GALVANIZED STEEL WIRE MESH GABIONS\; *FIO*\.

SD-14 SAMPLES\
STONE QUALITY\; *FIO*\.

SD-13 CERTIFICATES\
ACCEPTANCE REQUIREMENTS\; *FIO*\.

SECTION 02221A

EARTHWORK FOR BUILDINGS
03/92

INDEX

PART 1 GENERAL
1.1. REFERENCES
1.2. DEFINITIONS

PART 2 PRODUCTS
2.1. MATERIALS
2.2. NOT USED

PART 3 EXECUTION
3.1. CLEARING AND GRUBBING
3.2. TOPSOIL
3.3. EXCAVATION
3.4. DRAINAGE AND DEWATERING
3.5. SHORING
3.6. BLASTING
3.7. UTILITY AND DRAIN TRENCHES
3.8. BORROW
3.9. EXCAVATED MATERIALS
3.10. FINAL GRADE OF SURFACES TO SUPPORT CONCRETE
3.11. SUBGRADE PREPARATION
3.12. FILLING AND BACKFILLING
3.13. TESTING
3.14. NOT USED
3.15. GRADING
3.16. SPREADING TOPSOIL
3.17. PROTECTION

SECTION 02221A

EARTHWORK FOR BUILDINGS
03/92

PART 1. GENERAL

1.1. REFERENCES

The publications listed below form a part of this specification to the extent referenced. The publications are referred to in the text by basic designation only.

AMERICAN SOCIETY FOR TESTING AND MATERIALS (ASTM)

\-ASTM D 1556-\	(1990) Density and Unit Weight of Soil in Place by the Sand-Cone Method
\-ASTM D 1557-\	(1991) Laboratory Compaction Characteristics of Soil Using Modified Effort (56,000 ft-lbf/cu. ft. (2,700 kN-m/cu.m.))
\-ASTM D 2167-\	(1994) Density and Unit Weight of Soil in Place by the Rubber Balloon Method
\-ASTM D 2487-\	(1993) Classification of Soils For Engineering Purposes (Unified Soil Classification System)

1.2. DEFINITIONS

Degree of compaction required is expressed as a percentage of the maximum density obtained by the test procedure presented in \-ASTM D 1557-\ abbreviated hereinafter as percent laboratory maximum density.

PART 2. PRODUCTS

2.1. MATERIALS

2.1.1. Satisfactory Materials

Satisfactory materials include materials classified in \-ASTM D 2487-\ as GW, GP, GC, GM, SW, SP, SC, SM, CL, and ML, and shall be free of trash, debris, roots or other organic matter, or stones larger than 3 inches in any dimension.

2.1.2. Unsatisfactory Materials

Unsatisfactory materials include materials classified in \-ASTM D 2487-\ as MH, CH, Pt, OH, and OL, and any other materials not defined as satisfactory.

2.1.3. Cohesionless and Cohesive Materials

Cohesionless materials include materials classified in \-ASTM D 2487-\ as GW, GP, SW, and SP. Cohesive materials include materials classified as GC, SC, ML, CL, MH, and CH. Materials classified as GM and SM will be identified as cohesionless only when the fines are nonplastic.

2.1.4. NOT USED

2.1.5. Non-frost Susceptible Material

Non-frost susceptible material shall be a uniformly graded washed sand with a maximum particle size of 3/8 inch and less than 5 percent passing the No. 200 size sieve, and with not more than 3 percent by weight finer than 0.02 mm grain size.

2.2. NOT USED

PART 3. EXECUTION

3.1. CLEARING AND GRUBBING

Clearing and grubbing is specified in SECTION 02110.

3.2. TOPSOIL

Topsoil shall be stripped to a depth of 6 inches below existing grade within the designated excavations and grading lines and deposited in storage piles for later use. Excess topsoil shall be disposed as specified for excess excavated material.

3.3. EXCAVATION

Excavation shall be as indicated for each structure, and footing except as specified. Excavation shall extend a sufficient distance from walls and footings to allow for placing and removal of forms. Excavations below indicated depths will not be permitted except to remove unsatisfactory material. Material removed below the depths indicated without specific direction shall be replaced at no additional cost, except that concrete footings shall be increased in thickness to the bottom of the overdepth excavations. Satisfactory material shall be placed and compacted as specified in paragraph FILLING AND BACKFILLING.

3.4. DRAINAGE AND DEWATERING

3.4.1. Drainage

Surface water shall be directed away from construction sites so as to prevent erosion and undermining of foundations. Excavated slopes and backfill surfaces shall be protected to prevent erosion and sloughing. Excavation shall be performed so that the site and the area immediately surrounding the site and affecting operations at the site shall be continually and effectively drained.

3.4.2. Dewatering

Groundwater flowing toward or into excavations shall be controlled to prevent sloughing of excavation slopes and walls, boils, uplift and heave in the excavation and to eliminate interference with orderly progress of construction. French drains, sumps, ditches or trenches will not be permitted within 3 feet of the foundation of any structure, except with specific written approval. While the excavation is open, the water level shall be maintained continuously, at least 2 feet below the working level.

3.5. SHORING

Shoring, including sheet piling, shall be furnished and installed as necessary to protect workmen, banks, adjacent paving, structures, and utilities. Shoring, bracing, and sheeting shall be removed as excavations are backfilled, in a manner to prevent caving.

3.6. BLASTING

Blasting will not be permitted.

3.7. UTILITY AND DRAIN TRENCHES

Trenches for underground utilities systems and drain lines shall be excavated to the required alignments and depths. The bottoms of trenches shall be graded to secure the required slope and shall be tamped if necessary to provide a firm pipe bed. Recesses shall be excavated to accommodate bells and joints so that pipe will be uniformly supported for the entire length. Rock, where encountered, shall be excavated to a depth of at least 6 inches below the bottom of the pipe, and the overdepth shall be backfilled with satisfactory material placed and compacted in conformance with paragraph FILLING AND BACKFILLING.

3.8. BORROW

Where satisfactory materials are not available in sufficient quantity from required excavations, approved materials shall be obtained from sources off-site.

3.9. EXCAVATED MATERIALS

Satisfactory excavated material required for fill or backfill shall be placed in the proper section of the permanent work required under this section or shall be separately stockpiled if it cannot be readily placed. Satisfactory material in excess of that required for the permanent work and all unsatisfactory material shall be disposed of off-site.

3.10. FINAL GRADE OF SURFACES TO SUPPORT CONCRETE

Excavation to final grade shall not be made until just before concrete is to be placed. Shales shall be protected from slaking or other erosion resulting from ponding or flow of water.

3.11. SUBGRADE PREPARATION

Unsatisfactory material in surfaces to receive fill or in excavated areas shall be removed and replaced with satisfactory materials. The surface shall be scarified to a depth of 6 inches before the fill is started. Sloped surfaces steeper than 1 vertical to 4 horizontal shall be plowed, stepped, benched, or broken up so that the fill material will bond with the existing material. When subgrades are less than the specified density, the ground surface shall be broken up to a minimum depth of 6 inches, pulverized, and compacted to the specified density. When the subgrade is part fill and part excavation or natural ground, the excavated or natural ground portion shall be scarified to a depth of 12 inches and compacted as specified for the adjacent fill. Compaction shall be as specified in paragraph FILLING AND BACKFILLING.

3.12. FILLING AND BACKFILLING

Satisfactory materials shall be used in bringing fills and backfills to the lines and grades indicated. Satisfactory materials shall be placed in horizontal layers not exceeding 8 inches in loose thickness, or 6 inches when hand-operated compactors are used. Material shall not be placed on surfaces that are muddy, frozen or contain frost. Compaction shall be accomplished by sheepsfoot rollers, pneumatic-tired rollers, steel-wheeled rollers, or other approved equipment well suited to the soil being compacted. After placing, each layer shall be plowed, disked, or otherwise broken up, moistened or aerated as necessary, thoroughly mixed and compacted as specified. Backfilling shall not begin until construction below finish grade has been approved, underground utilities systems have been inspected, tested and approved, forms removed, and the excavation cleaned of trash and debris. Where pipe is coated or wrapped for protection against corrosion, the backfill material up to an elevation 2 feet above sewer lines and 1 foot above other utility lines shall be free from stones larger than 1 inch in any dimension. Heavy equipment for spreading and compacting backfill shall not be operated closer to foundation or retaining walls than a distance equal to the height of backfill above the top of footing; the area remaining shall be compacted in layers not more than 4 inches in compacted thickness with power-driven hand tampers suitable for the material being compacted. Backfill shall be placed carefully around pipes or tanks to avoid damage to coatings, wrappings, or tanks. Backfill shall not be placed against foundation walls prior to 7 days after completion of the walls. As far as practicable, backfill shall be brought up evenly on each side of the wall and sloped to drain away from the wall. Each layer of fill and backfill shall be compacted to not less than the percentage of maximum density specified below:

	Percent Laboratory maximum density	
	Cohesive material	Cohesionless material
Fill and backfill		
Under structures, building slabs, steps, paved areas, around footings, and in trenches	90	95
Under sidewalks and grassed areas	(See SECTION \=02210=\ GRADING)	

Approved compacted subgrades that are disturbed by the Contractor's operations or adverse weather shall be scarified and compacted as specified to the required density prior to further construction thereon. Recompaction over underground utilities and heating lines shall be by hand tamping.

3.13. TESTING

Testing shall be the responsibility of the Contractor and shall be performed at no additional cost. Testing shall be performed by an approved commercial testing laboratory or may be performed by the Contractor subject to approval. Field in-place density shall be determined in accordance with \-ASTM D 1556-\ or \-ASTM D 2167-\. The following number of tests, if performed at the appropriate time, shall be the minimum acceptable for each type operation.

3.13.1. \+In-Place Densities+\

3.13.1.1. \+In-Place Density of Subgrades+\

One test per 2,000 square feet or fraction thereof.

3.13.1.2. \+In-Place Density of Fills and Backfills+\

One test per 5,000 square feet or fraction thereof of each lift for fill or backfill areas compacted by other than hand or hand-operated machines. The density for each lift of fill or backfill materials for trenches, pits, building perimeters or other structures or areas less than 10 feet in width, which are compacted with hand or hand-operated machines shall be tested as follows: One test per each area less than 2,000 square feet, or one test for each 100 linear feet of long narrow fills 50 feet or more in length.

3.13.2. \+Optimum Moisture and Laboratory Maximum Density+\

Tests shall be made for each type material or source of material including borrow material to determine the optimum moisture and laboratory maximum density values. One representative test per 200 cubic yards of fill and backfill, or

when any change in material occurs which may affect the optimum moisture content or laboratory maximum density, will be made.

3.14. NOT USED

3.15. GRADING

Areas within 5 feet outside of each building and structure line shall be constructed true-to-grade, shaped to drain, and shall be maintained free of trash and debris until final inspection has been completed and the work has been accepted.

3.16. SPREADING TOPSOIL

Areas outside the building lines from which topsoil has been removed shall be topsoiled. The surface shall be free of materials that would hinder planting or maintenance operations. Topsoil shall be uniformly spread, graded, and compacted to the thickness, elevations, and slopes shown. Topsoil shall be compacted by one pass of a cultipacker, roller, or other approved equipment weighing 100 to 160 pounds per linear foot of roller. Topsoil shall not be placed when the subgrade is frozen, excessively wet, extremely dry, or in a condition otherwise detrimental to seeding, planting, or proper grading.

3.17. PROTECTION

Settlement or washing that occurs in graded, topsoiled, or backfilled areas prior to acceptance of the work shall be repaired and grades reestablished to the required elevations and slopes.

SECTION 02222

EXCAVATION, TRENCHING, AND BACKFILLING FOR UTILITIES SYSTEMS

INDEX

PART 1 GENERAL
1.1 REFERENCES
1.2 NOT USED
1.3 DEFINITIONS
1.4 SUBMITTALS

PART 2 PRODUCTS
2.1 MATERIALS
2.2 EQUIPMENT

PART 3 EXECUTION
3.1 EXCAVATION
3.2 BACKFILLING AND COMPACTION
3.3 NOT USED
3.4 TESTING

SECTION 02222

EXCAVATION, TRENCHING, AND BACKFILLING FOR UTILITIES SYSTEMS

PART 1 GENERAL

1.1 REFERENCES

The publications listed below form a part of this specification to the extent referenced. The publications are referred to in the text by basic designation only.

AMERICAN SOCIETY FOR TESTING AND MATERIALS (ASTM)

\-ASTM D 422-\	(1963; R 1990) Particle-Size Analysis of Soils
\-ASTM D 1556-\	(1990) Density and Unit Weight of Soil in Place by the Sand-Cone Method
\-ASTM D 1557-\	(1991) Laboratory Compaction Characteristics of Soil Using Modified Effort (56,000 ft-lbf/cu. ft. (2,700 kN-m/cu. m.))
\-ASTM D 2167-\	(1994) Density and Unit Weight of Soil in Place by the Rubber Balloon Method
\-ASTM D 2487-\	(1993) Classification of Soils for Engineering Purposes (Unified Soil Classification System)
\-ASTM D 2922-\	(1991) Density of Soil and Soil-Aggregate in Place by Nuclear Methods (Shallow Depth)
\-ASTM D 3017-\	(1988; R 1993) Water Content of Soil and Rock in Place by Nuclear Methods (Shallow Depth)

1.2 NOT USED

1.3 DEFINITIONS

1.3.1 Degree of Compaction

Degree of compaction shall be expressed as a percentage of the maximum density obtained by the test procedure presented in \-ASTM D 1557-\.

1.4 SUBMITTALS

Contracting Officer approval is required for submittals with a "GA" designation; submittals having an "FIO" designation are for information only. The following shall be submitted in accordance with Section \=01300=\ SUBMITTAL PROCEDURES:

SD-09 Reports\

Field Density Tests\; *GA*\.

Testing of Backfill Materials\; *FIO*\.

Copies of all laboratory and field test reports within 24 hours of completion of the test.

PART 2 PRODUCTS

2.1 MATERIALS

2.1.1 Suitable Materials

Suitable materials are materials that classify according to \-ASTM D 2487-\ as GW, GP, GM, GC, SW, SP, SM, SC, CL, and ML.

2.1.2 Unsuitable Materials

Unsuitable materials include all materials that are not defined above as suitable materials. In addition, unsuitable materials are materials that classify according to \-ASTM D 2487-\ as MH, OH, CH, Pt, SP and OL. Unsuitable materials also include all material that contains debris; refuse; roots; organic matter; frozen material; fine-grained sedimentary rocks (i.e., shale, claystone, siltstone, mudstone, and marl) even though they may be intensely weathered; stones larger than 3 inches in any dimension; or other materials that are determined by the Contracting Officer as unsuitable for providing a stable subgrade or stable foundation for utilities. Otherwise suitable material which has excess moisture content shall not be classified as unsuitable material unless it cannot be dried by manipulation, aeration, or blending with other materials as determined by the Contracting Officer.

2.1.3 Cohesionless and Cohesive Materials

Cohesionless materials shall include materials classified in \-ASTM D 2487-\ as GW, GP, SW, and SP. Cohesive materials include materials classified as GC, SC, ML, CL, MH, and CH. Materials classified as GM and SM will be identified as cohesionless only when the fines are nonplastic.

2.1.4 Unstable Material

Unstable material shall consist of suitable materials too wet to properly support the utility pipe, conduit, or appurtenant structure as determined by the Contracting Officer.

2.1.5 Select Granular Material

Select granular material shall consist of well-graded sand, gravel, crushed gravel, crushed stone or crushed slag composed of hard, tough and durable particles, and shall contain not more than 10 percent by weight of material passing a No. 200 mesh sieve. The maximum allowable aggregate size shall be 0.5

inches, or the maximum size recommended by the pipe manufacturer, whichever is smaller.

2.1.6 Not Used

2.1.7 Expansive Soils

Expansive soils are defined as soils that have a plasticity index greater than 24 and a liquid limit greater than 49 when tested in accordance with \-ASTM D 4318-\.

2.1.8 Non-Expansive Soils

Non-expansive soils are defined as soils with a plasticity index less than or equal to 24 and a liquid limit less than or equal to 49 when tested in accordance with \-ASTM D 4318-\.

2.1.9 Initial Backfill Material

Initial backfill shall consist of select granular material or suitable materials free from rocks 0.5 inches or larger in any dimension or free from rocks of such size as recommended by the pipe manufacturer, whichever is smaller.

2.1.10 Plastic Marking Tape

Plastic marking tape shall be acid and alkali-resistant polyethylene film, 6 inches wide with minimum thickness of 0.004 inch. Tape shall have a minimum strength of 1750 psi lengthwise and 1500 crosswise. The tape shall be manufactured with integral wires, foil backing or other means to enable detection by a metal detector when the tape is buried up to 3 feet deep. The tape shall be of a type specifically manufactured for marking and locating underground utilities. The metallic core of the tape shall be encased in a protective jacket or provided with other means to protect it from corrosion.

2.2 EQUIPMENT

2.2.1 Dewatering

The Contractor shall provide and maintain adequate dewatering equipment to remove and dispose of all surface and ground water entering excavations, trenches, or other parts of the work.

PART 3 EXECUTION

3.1 EXCAVATION

During excavation, material suitable for backfilling shall be stockpiled in an orderly manner at a distance from the banks of the trench equal to 1/2 the depth of the excavation, but in no instance closer than 2 feet. Excavated material not required or not suitable for backfill or shall be disposed of below the foundation layer of the cover system. No material shall be removed from the project site without prior approval from the Contracting Officer. Grading shall

be done as necessary to prevent surface water from flowing into the excavation, and any water accumulating therein shall be removed to maintain the stability of the bottom and sides of the excavation. Unauthorized overexcavation shall be backfilled in accordance with paragraph BACKFILLING AND COMPACTION at no additional cost to the Contract.

3.1.1 Trench Excavation

The trench shall be excavated as recommended by the manufacturer of the pipe to be installed. Trench walls below the top of the pipe shall be sloped, or made vertical, and of such width as recommended in the manufacturer's installation manual. Where no manufacturer's installation manual is available, trench walls shall be made vertical. Trench walls shall be shored, cut back to a stable slope, or provided with equivalent means of protection for employees who may be exposed to moving ground or cave in. Special attention shall be given to slopes which may be adversely affected by weather or moisture content. The trench width below the top of pipe shall not exceed 24 inches plus pipe outside diameter (O.D.) for pipes of less than 24 inches inside diameter and shall not exceed 36 inches plus pipe outside diameter for sizes larger than 24 inches inside diameter. Where recommended trench widths are exceeded, redesign, stronger pipe, or special installation procedures shall be utilized by the Contractor. The cost of redesign, stronger pipe, or special installation procedures shall be borne by the Contractor without any additional cost to the contract.

3.1.1.1 Bottom Preparation

Trench bottoms shall be over excavated, if required, to allow installation of pipe on granular material. Trench bottoms shall be accurately graded to provide uniform bearing and support for the bottom quadrant of each section of the pipe. Bell holes shall be excavated to the necessary size at each joint or coupling to eliminate point bearing. Stones of 0.5 inches or greater in any dimension, or as recommended by the pipe manufacturer, whichever is smaller, shall be removed to avoid point bearing.

3.1.1.2 NOT USED

3.1.1.3 Removal of Unsuitable or Unstable Material

Where unsuitable or unstable material is encountered in the bottom of the trench, such material shall be removed to the depth directed and replaced to the proper grade with select granular material as provided in paragraph BACKFILLING AND COMPACTION. When removal of unsuitable or unstable material is required due to the fault or neglect of the Contractor in performance of work, the resulting material shall be excavated and replaced by the Contractor without additional cost to the contract.

3.1.1.4 Excavation for Appurtenances

Excavation for manholes, catch-basins, inlets, or similar structures shall be of sufficient size to permit the placement and removal of forms for the full length and width of structure footings and foundations. Removal of unsuitable or unstable material shall be as specified above. When concrete or masonry is to

be placed in an excavated area, special care shall be taken not to disturb the bottom of the excavation. Excavation to the final grade level shall not be made until just before the concrete or masonry is to be placed.

3.1.1.5 Jacking, Boring, and Tunneling

Unless otherwise indicated, excavation shall be by open cut except that sections of a trench may be jacked, bored, or tunneled if, in the opinion of the Contracting Officer, the pipe, cable, or duct can be safely and properly installed and backfill can be properly compacted in such sections.

3.1.1.6 Stockpiles

Stockpiles of suitable, unsuitable and wasted materials shall be placed and graded as specified. Stockpiles shall be kept in a neat and well drained condition, giving due consideration to drainage at all times. Adequate drainage shall be provided for the stockpiles and surrounding areas by means of ditches, dikes, or other approved methods. The ground surface at stockpile locations shall be cleared, grubbed, and sealed by rubber-tired equipment, excavated suitable and unsuitable materials shall be separately stockpiled. Stockpiles of suitable materials shall be protected from contamination which may destroy the quality and fitness of the stockpiled material. If the Contractor fails to protect the stockpiles, and any material becomes unsuitable, such material shall be removed and replaced with suitable material from approved sources at no additional cost to the contract. [Locations of stockpiles of suitable materials shall be subject to prior approval of the Contracting Officer.

3.1.1.7 Dewatering

Each excavation shall be kept dry during subgrade preparation and continually thereafter until the structure to be built, or the pipe to be installed, therein is completed to the extent that no damage from hydrostatic pressure, flotation, or other cause will result. All excavations for concrete structures or trenches which extend down to or below ground water shall be dewatered by lowering and maintaining the ground water level a minimum of 12 inches below the bottom of the excavation. Surface water shall be diverted or otherwise prevented from entering excavated areas or trenches to the greatest extent practicable without causing damage to adjacent property. All pipe or conduits shall be left clean and free of sediment.

3.2 BACKFILLING AND COMPACTION

Backfill material shall consist of suitable material, select granular material, or initial backfill material as required. Backfill shall be placed in layers not exceeding 6 inches loose thickness for compaction by hand operated machine compactors, and 8 inches loose thickness for other than hand operated machines, unless otherwise specified. The moisture content of cohesive soil shall be between 1 percent below and 3 percent above optimum moisture when compacted. Cohesionless soils shall be compacted at a moisture content as required to facilitate compaction without bulking. Each layer shall be compacted to not less than the percentage of laboratory maximum density specified below:

	Percentage Laboratory Maximum Density	
	Cohesive Material	Cohesionless Material
Native Soil and Backfill		
Beneath Buildings and Structures	90	95
Under Sidewalks and Grassed Areas	Reference SECTION:	GRADING
Grassed Areas	85	90
Select Granular Material	90	90
Suitable Material	90	90

3.2.1 Trench Backfill

Trenches shall be backfilled to the grade shown. The trench shall not be backfilled until all specified tests are performed.

3.2.1.1 NOT USED

3.2.1.2 Replacement of Unsuitable or Unstable Material

Unsuitable or unstable material shall be removed from the bottom of the trench or excavation shall be replaced with select granular material placed in layers not exceeding 6 inches loose thickness. For landfill gas extraction system header piping, waste or other unsuitable material shall be removed for a depth of 6-inches below the pipe inverts and replaced with select granular materials.

3.2.1.3 Backfill

Backfill shall be placed in 6-inch loose thickness layers and compacted to at least 90 percent of maximum density within moisture content ranges as specified in paragraph BACKFILLING AND COMPACTION. Backfill material shall be placed and compacted with approved tampers to a height of at least one foot above the utility pipe or conduit. The backfill shall be brought up evenly on both sides of the pipe for the full length of the pipe. Care shall be taken to ensure thorough compaction of the fill under the haunches of the pipe.

3.2.1.4 NOT USED

3.2.1.5 Final Backfill

The remainder of the trench shall be filled with suitable material.

3.2.2 Backfill for Appurtenances

After the manhole, catchbasin, inlet, or similar structure has been constructed backfill shall be placed in such a manner that the structure will not be damaged by the shock of falling earth. The backfill material shall be deposited and compacted as specified for final backfill, and shall be brought up evenly on all sides of the structure to prevent eccentric loading and excessive stress.

3.3 NOT USED

3.4 TESTING

Testing shall be the responsibility of the Contractor and shall be performed at no additional cost to the contract.

3.4.1 Testing Facilities

Tests shall be performed by an approved commercial testing laboratory furnished by the Contractor.

3.4.2 *Testing of Backfill Materials*\

Characteristics of backfill materials shall be determined in accordance with particle size analysis of soils \-ASTM D 422-\ and moisture-density relations of soils \-ASTM D 1557-\. A minimum of one particle size analysis and one moisture-density relation test shall be performed on each different type of material used for bedding and backfill.

3.4.3 *Field Density Tests*\

Tests shall be performed in sufficient numbers to ensure that the specified density is being obtained for each lift. A minimum of one field density test per lift of backfill for every 500 feet of installation shall be performed. One moisture density relationship shall be determined for every principal type of material used. Field in-place density shall be determined in accordance with \-ASTM D 1556-\ \-ASTM D 2167-\ \-ASTM D 2922-\. When \-ASTM D 2922-\ is used, the calibration curves shall be checked and adjusted using the sand cone method as described in paragraph Calibration of the ASTM publication. \-ASTM D 2922-\ results in a wet unit weight of soil and when using this method, \-ASTM D 3017-\ shall be used to determine the moisture content of the soil. The calibration curves furnished with the moisture gauges shall be checked along with density calibration checks as described in \-ASTM D 3017-\. The calibration checks of both the density and moisture gauges shall be made at the beginning of a job, on each different type of material encountered, or at intervals as directed by the Contracting Officer. Copies of calibration curves, results of calibration tests, and field and laboratory density tests shall be furnished to the Contracting Officer. Trenches improperly compacted shall be reopened to the depth directed, then refilled and compacted to the density specified at no additional cost to the contract.

SECTION 02223

SELECT FILL AND TOPSOIL FOR LANDFILL COVER

6/95

INDEX

PART 1 - GENERAL
- 1.1. SUMMARY
- 1.2. REFERENCES
- 1.3. EQUIPMENT
- 1.4. SUBMITTALS
- 1.5. QUALIFICATIONS

PART 2 - PRODUCTS
- 2.1. SUITABLE SELECT FILL MATERIALS.
- 2.2. UNSUITABLE SELECT FILL MATERIALS.
- 2.3. SUITABLE TOPSOIL.

PART 3 - EXECUTION
- 3.1. SELECTION OF BORROW MATERIAL.
- 3.2. PLACEMENT OF SELECT FILL AND TOPSOIL
- 3.3. TESTS AND CONTROL
- 3.4. FINISHED GRADES.
- 3.5. COVER PROTECTION.

SECTION 02223

SELECT FILL AND TOPSOIL FOR LANDFILL COVER
6/95

PART 1. - GENERAL

1.1. SUMMARY

This section includes the grading requirements for the select fill and topsoil layers of the landfill cover system. Refer to SECTION \=02210=\ GRADING for grading requirements for all access roads including those on the cover system.

1.2. REFERENCES

The publications listed below form a part of this specification to the extent referenced. The publications are referred to in the text by basic designation only.

AMERICAN SOCIETY FOR TESTING AND MATERIALS (ASTM) Publications.

\-ASTM D 422-\ (1963; R 1972) Particle-Size Analysis of Soils

\-ASTM D 2487-\ (1993) Classification of Soils for Engineering Purposes

\-ASTM D 4318-\ (1993) Standard Test Method for Liquid Limit, Plastic Limit, and Plasticity Index of Soils.

UNITED STATES DEPARTMENT OF AGRICULTURE (USDA)

\-USDA 01-\ Soil Survey Methods Manual, Soil Investigation Report No. 42.

1.3. *EQUIPMENT*\

Equipment and compaction equipment shall be approved by the Contracting Officer.

1.4. SUBMITTALS

Contracting Officer approval is required for submittals with a "GA" designation; submittals having an "FIO" designation are for information only. The following shall be submitted according to SECTION \=01300=\: SUBMITTAL PROCEDURES:

SD-04 Drawings\

Finished Grades\; *GA*\. (Cross-sections and details of finished grade.)

SD-08 Statements\

Equipment\; *GA*\.

Qualifications\; *GA*\.

SD-09 Reports\

Chemical Quality Testing\; *GA*\.

Classification Determinations\; *GA*\.

Other Tests\; *GA*\.

1.5. *QUALIFICATIONS*

1.5.1. Quality Control (QC) Inspector.

The QC Inspector shall be a person or company furnished by the Contractor who shall have the responsibility of performing inspections and testing for the purpose of monitoring and controlling select fill and topsoil placement activities.

1.5.2. Quality Control (QC) Laboratory.

The Contractor shall retain a QC Laboratory for laboratory quality control testing.

PART 2. - PRODUCTS

2.1. SUITABLE SELECT FILL MATERIALS.

Suitable select fill materials shall consist of soils classified as silty sand (SM), clayey sand (SC), silty-clayey sand (SC-SM), or lean clay (CL) in accordance with \-ASTM D 2487-\. The material shall have one hundred percent of the material by weight passing the 3/4" sieve.

2.2. UNSUITABLE SELECT FILL MATERIALS.

Unsuitable select fill materials include all materials not defined in PARAGRAPH 2.1 as suitable materials. In addition, unsuitable materials are materials that classify according to \-ASTM D 2487-\ as SP, SW, GP, GW, MH, OH, CH, Pt, and OL. Unsuitable materials also include all material that contains debris, refuse, roots, organic matter, frozen material, fine grained sedimentary rocks (i.e., shale, claystone, siltstone, mudstone, and marl) even though they may be intensely weathered, contamination from hazardous, toxic, biological or radiological substances, stone having a maximum dimension larger than 0.75 inches in any dimension, or other materials that are determined by the Contracting Officer as unsuitable for providing a stable subgrade or stable foundation for the cover system. Otherwise suitable material which has excess moisture content shall be classified as unsuitable material if it cannot be dried by manipulation, aeration, or blending with other materials as determined by the Contracting Officer.

2.3. SUITABLE TOPSOIL.

Suitable topsoil is defined as selectively excavated, natural, friable soil that is representative of soils in the vicinity that produce heavy growths of crops, grass, or other vegetation and is reasonably free from underlying subsoil, clay lumps, objectionable weeds, litter, brush, matted roots, toxic substances, or any material that might be harmful to plant growth or be a hindrance to grading, planting, or maintenance operations. Soils from ditch bottoms, drained ponds, or eroded areas, handled when too wet or soggy are not acceptable. Topsoil shall not contain more than five percent by volume of stones, stumps, or other objects larger than 1 inch in any dimension. Topsoil shall have a pH value of between 6.0 and 7.5 and shall contain from 5 to 20 percent organic matter as determined by the analysis methods described in \-USDA 01-\. If the pH or organic content is not within the specified range, the Contractor shall either amend the material to meet the specification or select an alternative material that meet the specifications. Topsoil shall be approved by the Contracting Officer. See SECTION \02935=\ TURF for additional requirements.

PART 3. - EXECUTION

3.1. SELECTION OF BORROW MATERIAL.

The Contractor shall procure required select fill and topsoil materials from the specified on-site borrow areas and from borrow sources outside the limits of the site. Any shortage of select fill and all topsoil material shall be acquired from an off-site borrow source. The Contractor shall obtain from the owners of off-site borrow sources the right to procure materials, shall pay all royalties and other charges involved, and shall bear the expenses of developing the sources, including rights-of-way for hauling.

3.2. PLACEMENT OF SELECT FILL AND TOPSOIL

3.2.1. General Requirements.

Before placement of select fill over geosynthetic material, the geosynthetic material shall be inspected and approved by the Contractor's quality control supervisor and Contracting Officer. The select fill shall be placed at the locations and to the lines and grades shown on the drawings.

3.2.2. Backfilling Around Piping.

Piping, such as landfill gas extraction wells and piping and drainage pipe clean-outs, within the grade of the select fill as shown on the drawings shall be protected from damage during backfilling, and if damaged during any construction activity, shall be repaired at no additional cost.

3.2.3. Select Fill Placement and Compaction.

Select fill material shall be uniformly distributed over the designated areas and evenly spread to a minimum final thickness of 18 inches. The first layer of select fill material shall be placed in a 12- to 18-inch thick loose lift.

Subsequent layers shall be placed in maximum 12-inch thick loose lifts until the full layer thickness is achieved. Select fill shall be placed by starting at the toe and working up the 1V to 4H side slopes. Select fill shall not be dumped or dropped directly onto the geosynthetic material from a height greater than 3 feet. Pushing fill material across the geosynthetic material shall not be permitted. Placement equipment shall have low ground pressures that do not exceed 7 psi for all lifts. Sudden stops, turns, or acceleration of placement or compaction equipment shall not be allowed. Equipment shall not cause excessive rutting in the lift. Select fill shall not be stockpiled on the geosynthetic material. Select fill is not subject to specific density requirements but shall be compacted using the procedures described herein. Select fill on 1V to 4H cover system side slopes and in drainage channels shall be compacted using a minimum of 3 passes, over all areas, of the tracks of the placement equipment. Select fill on the 4 percent top cap shall be compacted using 2 passes, over all areas, of the tracks of the placement equipment. A pass is defined as the entire coverage of the lift of material to be compacted by the approved compaction equipment. Refer to SECTION \=02210=\ GRADING for compaction requirements of access road subgrades to include material placed above the 18-inch select fill layer. Any damage to the geosynthetic material caused by the Contractor's placement and compaction operation shall be repaired at no additional expense to the contract. Select fill shall not be placed when the material or subgrade is frozen, excessively wet, extremely dry, or in a condition otherwise detrimental to proper grading. The Contractor shall cover the geosynthetics with select fill as soon as possible after geosynthetic placement to reduce the possibility of damage. No soil placement or compaction equipment shall be pulled or driven directly on geosynthetic material. Soil placement equipment will be allowed on areas underlain by the geosynthetic material only after the first layer of select fill has been placed. Wheeled vehicles will not be allowed on the cover until after the topsoil and select fill are graded into place and compacted.

3.2.4. Topsoil Placement and Compaction.

Topsoil shall be uniformly distributed on the designated areas and evenly spread to a minimum thickness of 6 inches. Previously constructed select fill grades shall be repaired, if necessary, so that the topsoil layer placement conforms to the cross-sections indicated on the drawings. Topsoil is not subject to specific density requirements but shall be minimally traffic compacted during placement. Spreading and placement shall be performed in such a manner that planting can proceed with little additional soil preparation or tillage. The surface resulting from topsoiling shall meet the finish surface requirements specified in the Paragraph: FINISHED GRADES. Topsoil shall not be placed when the material or subgrade is frozen, excessively wet, extremely dry, or in a condition otherwise detrimental to proper grading or the proposed planting.

3.3. TESTS AND CONTROL

3.3.1. Sampling and Testing.

Quality control sampling and testing shall be performed according to \=01440=\ CONTRACTOR QUALITY CONTROL and as specified herein.

3.3.2. \+*Chemical Quality Testing*\+\.

Borrow material shall be sampled and analyzed for chemical contamination of soil before use, as specified in SECTION \=01402=\ CHEMICAL QUALITY MANAGEMENT. If borrow material does not meet the criteria as specified, borrow material from another source that meets the criteria shall be acquired.

3.3.3. \+*Classification Determinations*\+\.

Representative samples of soil material proposed for use in the select fill and topsoil layers shall be obtained for each principal type of material or combination of materials. Samples shall be classified in accordance with \-ASTM D 2487-\. Testing shall include Atterberg limits \-ASTM D 4318-\ and grain size determination (sieve analyses) \-ASTM D 422-\. Classification testing shall be done at a rate of one test per 5,000 cubic yards of borrow material. Samples shall be representative of the materials placed. Copies of all tests for classification shall be furnished to the Contracting Officer before placement of the material.

3.3.4. \+*Other Tests*\+\.

Representative samples of soil material proposed for use in the topsoil layers shall be obtained for each principal type of material or combination of materials. Samples shall be tested for pH and organic matter content as determined by the analysis methods described in \-USDA 01-\. Testing shall be done at a rate of one test per 5,000 cubic yards of borrow material. Samples shall be representative of the materials placed. Copies of all tests for classification shall be furnished to the Contracting Officer before placement of the material.

3.4. *FINISHED GRADES*\.

All areas, including filled sections and adjacent transition areas, shall be uniformly smooth graded. The completed select fill and topsoil surfaces shall be reasonably smooth and free from irregular surface changes. The degree of finish shall be that ordinarily obtainable from either blade-grader or scraper operation, except as otherwise specified. The contractor shall assure that the equipment utilized for finish grading does not damage the underlying geosynthetics. The completed select fill and topsoil layers shall not be more than 0.15 foot above the established grade or approved cross-section and shall be free of depressed areas where water would pond. Minus tolerances shall not be permitted. All areas shall be graded to drain readily. Cross-sections and details of the constructed cover system shall be furnished to the Contracting Officer. Refer to SECTION \=01510=\ SURVEYS for final cover topographic survey requirements.

3.5. COVER PROTECTION.

Where ruts occur in the select fill or topsoil layers, the material shall be brought to grade, reshaped and recompacted, if required, prior to the placing of additional fill. The storage or stockpiling of material on the cover system will not be permitted.

SECTION 02252

LANDFILL GAS EXTRACTION WELLS AND EXTRACTION TRENCHES

INDEX

PART 1 GENERAL
1.1 SUMMARY
1.2 REFERENCES
1.3 QUALIFICATIONS
1.4 SUBMITTALS

PART 2 PRODUCTS
2.1 LANDFILL GAS EXTRACTION WELL AND TRENCH MATERIALS

PART 3 EXECUTION
3.1 GENERAL TRENCHING
3.2 LANDFILL GAS EXTRACTION WELL INSTALLATION
3.3 LANDFILL GAS EXTRACTION TRENCH INSTALLATION
3.4 DRILL CUTTINGS AND EXCAVATION MATERIAL
3.4 TESTING
3.4 SURVEYS

SECTION 02252

LANDFILL GAS EXTRACTION WELLS AND EXTRACTION TRENCHES

PART 1 GENERAL

1.1 SUMMARY

This section specifies the drilling, trenching, installation, and backfilling requirements for construction of the landfill gas collection system extraction wells and extraction trenches.

1.2 REFERENCES

The publications listed below form a part of this specification to the extent referenced. The publications are referred to in the text by basic designation only.

AMERICAN SOCIETY FOR TESTING AND MATERIALS (ASTM)

\-ASTM D 422-\	(1963; R 1990) Particle-Size Analysis of Soils
\-ASTM C 136-\	(1993) Sieve Analysis of Fine and Coarse Aggregates
\-ASTM C 150-\	(1994) Portland Cement
\-ASTM D 422-\	(1963; R 1990) Particle-Size Analysis of Soils
\-ASTM D 1785-\	(1993) Poly(Vinyl Chloride) (PVC) Plastic Pipe, Schedules 40, 80, and 120
\-ASTM D 2487-\	(1993) Classification of Soils for Engineering Purposes (Unified Soil Classification System)
\-ASTM D 2488-\	(1993) Description and Identification of Soils(Visual-Manual Procedure)

AMERICAN ASSOCIATION OF STATE HIGHWAY AND TRANSPORTATION OFFICIALS (AASHTO)

M-43	Sizes of Aggregate for Road and Bridge Construction

1.3 *QUALIFICATIONS*

1.3.1 Quality Control (QC) Inspector

The QC Inspector shall be a person or company furnished by the Contractor who shall have the responsibility of performing inspections and testing for the

purpose of monitoring and controlling landfill gas collection system construction.

1.3.2 Quality Control (QC) Laboratory

The Contractor shall retain a QC Laboratory for laboratory quality control testing.

1.4 SUBMITTALS

Contracting Officer approval is required for submittals with a "GA" designation; submittals having an "FIO" designation are for information only. The following shall be submitted in accordance with Section \=01300=\ SUBMITTAL PROCEDURES:

SD-01 Data\

Landfill Gas Extraction Well Installation\; *GA*\

SD-04 Drawings\

Installation Diagrams\; *FIO*\

Wellhead Completion Equipment\; *GA*\

Manholes and Vaults\; *GA*\

SD-08 Statements\

Qualifications\; *FIO*\

Drilling Method\; *FIO*\

SD-09 Reports\

Granular Filter Pack\; *FIO*\

Testing of Backfill Materials\; *GA*\.

Copies of all laboratory and field test reports within 24 hours of completion of the test.

PART 2 PRODUCTS

2.1 LANDFILL GAS EXTRACTION WELL AND TRENCH MATERIALS

2.1.1 Landfill Gas Extraction Well and Extraction Trench Lateral and Header Piping

Lateral and header pipe for landfill gas extraction wells and extraction trenches shall consist of new nominal 6-, 10- and 12-inch diameter, contaminate free, high density polyethylene (HDPE) pipe. See Section \=15370=\ PROCESS PIPING AND APPURTENANCES for additional piping requirements.

2.1.2 Landfill Gas Extraction Well Casing and Slip Coupling

Casing material used in construction of extraction wells shall consist of new nominal 6-inch diameter, contaminate free, schedule 80, polyvinyl chloride (PVC) pipe. A PVC slip coupling shall be installed as shown on the drawings.

2.1.3 Landfill Gas Extraction Well Screen

Well screen shall consist of new nominal 8-inch diameter, contaminate free, schedule 80, manufactured PVC well screens. Screens shall be perforated as indicated on the drawings. Screen and fittings shall be made of the same material as the screen body and shall be securely welded to each screen section. Screen couplings shall be flush threaded with chemically inert O-rings, or welded and compatible with the casing pipe. A PVC cap shall be installed on the bottom of the screen.

2.1.4 Landfill Gas Extraction Trench Well Screen

Trench screen shall consist of new nominal 6-inch diameter, contaminate free, schedule 80, (0.04-inch), manufactured PVC well screens. Screens shall be perforated as indicated on the drawings. Screen and fittings shall be made of the same material as the screen body and shall be securely welded to each screen section. Screen couplings shall be flush threaded with chemically inert O-rings, or welded and compatible with the casing pipe. A PVC cap shall be installed at the end of the screened section.

2.1.5 Landfill Gas Extraction Well and Extraction Trench Pipe Fittings

Various fittings, such as tees and reducers, shall be constructed of materials as indicted on the drawings. A polyurethane flexible connector or approved equivalent shall be fastened to the pipes with stainless steel bands as indicated on the drawings. Airtight threaded caps will be provided on tees and screen ends as indicated on the drawings.

2.1.6 *Manholes and Vaults*\

Landfill gas extraction wellheads shall be located within non-metallic vaults and protective casings as indicated on the drawings. Each vault and protective casing shall be fitted with a watertight cover that are ventable to prevent

build-up of gases. The cover shall have a minimum thickness of 0.5 inches and shall be capable of being bolted or locked to prevent access.

Landfill gas extraction trench wellheads shall be located in manufactured HDPE manholes. HDPE manholes shall be fitted with watertight covers that are vented to prevent build-up of gases. The cover shall be capable of being bolted or locked to prevent access. Manholes shall be sized to accommodate valves, gages, and tee fittings. All connections shall be extrusion welded or as recommended by the manufacturer. Pipe entering or exiting manholes shall be installed to form airtight fittings to prevent infiltration of landfill gases. Contractor shall submit manhole details, to include connection and geosynthetic penetration details, to the Contracting Officer for approval a minimum of 21 days prior to delivery to the site.

2.1.7 *Wellhead Completion Equipment*\

Wellhead completion equipment, such as in-line flow meters, valves and hoses for vacuum gages, shall be installed in the extraction well and extraction trench wellheads as indicated on the drawings. All wellhead completion equipment shall be specifically manufactired for use in landfill gas collection systems. The vacuum gage hosing shall be connected to the pipe with 0.25-inch NPT connections or as recommended by the manufacturer. A sampling port shall be installed in each "tee" vent as shown on the drawings. Refer to specification section: \=15370=\ PROCESS PIPING AND APPURTENANCES for flow meter, valve and gage requirements. One set of gage readouts and accompanying calibration charts and other materials or data required to operate the equipment will be provided by the Contractor.

2.1.8 Extraction Well and Extraction Trench Granular Filter Pack

The filter pack for the screened sections of the extraction wells and extraction trenches shall consist of clean, washed, sand and gravel free from calcareous grains or materials. The gradation of the filterpack shall meet AASHTO No. 57 (M43) requirements as specified in Table 1.

TABLE 1
GRANULAR FILTER PACK GRADATION

U.S Sieve No.	Total Percent Passing
1.5"	100
1"	95-100
1/2"	25-60
No. 4	0-10
No. 200	0-5

2.1.9 Marking Tape and Marking Wire

Plastic marking tape shall be acid and alkali-resistant polyethylene film, 6-inches wide with minimum thickness of 0.004 inch. The tape shall be manufactured with integral wires, foil backing or other means to enable detection by a metal detector when the tape is buried up to 3 feet deep. The tape shall be of a type

specifically manufactured for marking and locating underground utilities. The metallic core of the tape shall be encased in a protective jacket or provided with other means to protect it from corrosion.

PART 3 EXECUTION

3.1 GENERAL TRENCHING

Refer to specification section \=02222=\ EXCAVATION, TRENCHING, AND BACKFILLING FOR UTILITY SYSTEMS for general trenching requirements. Excavated material not required or not suitable for backfill shall be removed from the site or shall be disposed of below the foundation layer of the cover system. No material shall be removed from the project site without prior approval from the Contracting Officer. The Contractor shall notify the Contracting Officer if any material excavated outside of the limits of final cover system is found to contain debris or waste.

3.1.1 Dewatering

Excavations shall be kept dry until the pipe is installed and the trench is backfilled. Surface water shall be diverted or otherwise prevented from entering excavated areas or trenches to the greatest extent practicable. The Contractor shall dispose of all water generated during dewatering activities in accordance with SECTIONS \=01402=\ CHEMICAL QUALITY MANAGEMENT and \=01570=\ DISPOSAL OF WATERS. All pipe shall be left clean and free of sediment.

3.1.2 Header Trench Backfilling

Refer to SECTION \=02222=\ EXCAVATION, TRENCHING, AND BACKFILLING FOR UTILITY SYSTEMS for backfill requirements. If encountered, waste, debris, or other unsuitable materials is encountered, it shall be over-excavated 6 inches and backfilled.

3.2 *LANDFILL GAS EXTRACTION WELL INSTALLATION*\

3.2.1 General

Landfill gas extraction wells shall be installed using a method that does not require drilling mud. The drilling method must prevent the collapse of waste material against or within six (6) inches of the well screen and casing. The drill rig shall be free from leaks of fuel, hydraulic fluid, or oil which may contaminate the working area. A plan describing the drilling method and well installation procedures shall be submitted to the Contracting Officer for approval.

Landfill gas extraction wells, excluding well head equipment, shall be installed prior to placement of the foundation layer. The wells shall consist of the specified screen, casing, and caps, and all materials shall be new, contaminate free, and not damaged. The wells shall be placed in the hole in such a manner as to avoid jarring impacts and to ensure the assembly is not damaged. The wells shall be installed while the temporary casing is still in place in the boring.

The wells shall be centered in the temporary casing. Screen lengths and depths of individual wells shall be as shown on the drawings. Landfill gas extraction wells shall be set straight and true to line. Vents on the extraction wells shall be opened until the collection and treatment systems are fully operational to prevent the build-up of gases below the cover system.

3.2.2 Gravel Pack Placement

Gravel pack for landfill gas extraction wells shall be tremied into place, from the bottom of the borehole up, in such a manner as to ensure uniform placement around the screen. The gravel pack shall extend from 24 inches below to 24 inches above the top of the screened interval as shown on the drawings. The lowermost 24 inches of gravel pack may be placed prior to well installation to serve as a base on which to rest the pipe. Temporary casing shall be withdrawn from the boring as the gravel pack is placed. The level of gravel pack shall not fall below the bottom of the temporary casing during placement of the gravel pack. All gravel pack materials shall be transported to the site in a manner that prevents contamination by other soils, oil and grease, and other chemicals.

3.2.3 Vault and Protective Cover Construction

Well casings and equipment shall extend into vaults and protective casings as shown on the drawings. A "tee" couple and a flexible connection will connect the well head to the lateral piping. Four ballards shall be filled with concrete and placed around the well vault as shown on the drawings. The ground surface around the top of the vaults and protective covers shall be grade to provide positive drainage.

3.2.4 *Installation Diagrams*\

An installation diagram shall be completed for each landfill gas extraction well installed. The scale of the diagram shall be 1 inch equals 1 foot. The diagram shall be prepared during landfill gas extraction well installation and submitted within 5 working days of the completion of each landfill gas extraction well installation. The diagram shall illustrate the as-built condition of the landfill gas extraction well and include, but not be limited to the following items:

a. Name of the project and site.
b. Landfill gas extraction well identification number.
c. Name of driller and name and signature of the person preparing the diagram.
d. Date(s) of installation.
e. Description of material from which the landfill gas extraction well is constructed, including casing and screen material, diameter and schedule of casing and screen, screen size and type, and joint type (threaded, etc.).
f. Total depth of landfill gas extraction well.
g. Nominal hole diameter.
h. Depth to top and bottom of screen and filter pack.
i. Elevations of key features of the landfill gas extraction well, such as top of casing, ground surface, bottom of well screen, and top and bottom of filter pack.

j. Other pertinent construction details, such as gradation and depth of granular filter pack, quantities of granular filter pack installed, and manufacturer of screen.
k. Landfill gas extraction well location by project coordinates. A plan sheet shall also be included showing the coordinate system used and the location of each well. A plan sheet is not required for each installation diagram; multiple wells may be shown on the same sheet.
l. Description of soil or other material (e.g. waste) encountered, according to the Unified Soil Classification System and \-ASTM D 2488-\, or general description, as necessary.

3.3 LANDFILL GAS EXTRACTION TRENCH INSTALLATION

3.3.1 General

Landfill gas extraction trenches shall be installed to the lines and grades shown on the drawings. Extraction trench piping and appurtenances shall be installed prior to placement of the foundation layer. The wells shall consist of the specified screen, casing, and caps, and all materials shall be new, contaminate free, and not damaged. Screens shall be centered in the trenches. Screen lengths shall be as shown on the drawings. Vents on the extraction trenches shall be opened until the collection and treatment systems are fully operational to prevent the build-up of gases below the cover system.

3.3.2 Gravel Pack Placement

Landfill gas extraction trenches shall be backfilled with gravel pack meeting the requirements in paragraph EXTRACTION WELL AND EXTRACTION TRENCH GRANULAR FILTER PACK. Trenches shall be backfilled to the pipe perforated screen invert elevation with granular filter pack prior to placement of the perforated screen. After initial backfilling and screen placement is completed, the remainder of the trench shall be backfilled with granular filterpack in such a manner as to insure all excavated voids and haunch areas are filled. Backfill material shall be placed at a moisture content that facilitates compaction. Areas not sufficiently compacted during placement operations, as determined by the Contracting Officer, shall be compacted with hand or other compaction equipment. Marking tape shall be placed in the trenches as shown on the drawings.

3.3.3 Manhole Construction

Landfill gas extraction trench wellheads shall be located in manufactured HDPE manholes. All connections shall be extrusion welded or as recommended by the manufacturer. Pipe entering or exiting manholes shall be installed to form airtight fittings. Contractor shall submit manhole details, to include connection and penetration details, to the Contracting Officer for approval a minimum of 21 days prior to delivery to the site. The ground surface around the top of the manhole shall be grade to provide positive drainage away from the manhole. Valves, flow meters, and gage connection and hosing shall be installed as shown on the drawings.

3.4 DRILL CUTTINGS AND TRENCH EXCAVATION MATERIAL

All drill cuttings and excavated material produced during landfill gas collection system construction and not utilized as backfill material shall be disposed of below the foundation layer of the cover system.

3.5 TESTING

3.5.1 Testing of *Granular Filter Pack*\ Materials

Characteristics of granular filter pack materials shall be determined in accordance with particle size analysis of soils \-ASTM D 422-\. A minimum of one particle size analysis shall be performed on each different type of material used for backfill.

3.6 SURVEYS

Landfill gas extraction well location, landfill gas extraction trench alignments, header trench alignments, and manhole locations shall be surveyed and locations provided on final as-built drawings. Elevations of the ground surface and the highest point on the uncapped "Tee" vent fitting for each extraction well and extraction trench shall be surveyed to within 0.01 foot. Refer to specification Section \=01510=\ TOPOGRAPHIC SURVEYS for additional survey requirements.

SECTION 02253

LANDFILL GAS MONITORING PROBES

INDEX

1. APPLICABLE PUBLICATIONS
2. SCOPE
3. QUALITY CONTROL
4. DOCUMENTATION
5. SUBMITTALS
6. MATERIALS
7. INSTALLATION
8. PROTECTION OF EXISTING FACILITIES

1. APPLICABLE PUBLICATIONS. The publications listed below form a part of this specification to the extent referenced. The publications are referred to in the text by the basic designation only.

1.1. AMERICAN SOCIETY FOR TESTING AND MATERIALS (ASTM) PUBLICATIONS.

\-ASTM C 136-\	(1993) Sieve Analysis of Fine and Coarse Aggregates
\-ASTM C 150-\	(1994) Portland Cement
\-ASTM D 422-\	(1963; R 1990) Particle-Size Analysis of Soils
\-ASTM D 1785-\	(1993) Poly(Vinyl Chloride) (PVC) Plastic Pipe, Schedules 40, 80, and 120
\-ASTM D 2487-\	(1993) Classification of Soils for Engineering Purposes (Unified Soil Classification System)
\-ASTM D 2488-\	(1993) Description and Identification of Soils(Visual-Manual Procedure)

1.2. AMERICAN ASSOCIATION OF STATE HIGHWAY AND TRANSPORATION OFFICIALS (AASTO)

M-43	Sizes of Aggregate for Road and Bridge Construction

2. SCOPE. The work provided for herein consists of furnishing all plant, labor, fuels, lubricants, electrical energy, materials, and equipment, and performing all operations required to construct the gas monitoring probes as indicated on the drawings and as specified herein.

3. QUALITY CONTROL. The Contractor shall establish and maintain quality control for all landfill gas probes to assure compliance with contract requirements. The Contractor shall provide a qualified geologist who shall be on-site and directly responsible for all well drilling and installation activities. A qualified geologist shall be defined as any person with at least a baccalaureate degree in geological science or geologic or geotechnical

engineering from an accredited university with a minimum of five years professional experience in logging and/or analysis of subsurface conditions. This geologist shall be fully informed of the subsurface conditions at this site prior to the commencement of work. The geologist and all drilling personnel shall meet the training requirements specified in OSHA Standard 29 CFR 1910.120(e) as discussed in SECTION \=01110=\: SAFETY, HEALTH AND EMERGENCY RESPONSE. Proof of the appropriate licenses, permits, training, and qualifications of the geologist and driller shall be submitted to the Contracting Officer. The Contractor shall maintain records of quality control for construction, including but not limited to the items listed in PARAGRAPH: SUBMITTALS.

4. DOCUMENTATION. For each landfill gas monitoring probe installed, the documents outlined below shall be completed.

4.1. *INSTALLATION DIAGRAMS*\. An installation diagram shall be completed for each probe installed. The scale of the diagram shall be 1-inch equals 2 feet. The diagram shall be prepared during probe installation operations and submitted within 5 working days after the completion of each probe installation. The diagram shall illustrate the as-built condition of the probe and include, but not be limited to the following items:

4.1.1. Name of the project and site.

4.1.2. Landfill gas monitoring probe identification number.

4.1.3. Name of driller and name and signature of the person

4.1.4. Date(s) of installation.

4.1.5. Description of material from which the gas monitoring probe is constructed, including casing and screen material, diameter and schedule of casing and screen, and joint type (threaded, etc.).

4.1.6. Total depth of gas monitoring probe.

4.1.7. Nominal hole diameter.

4.1.8. Depth to top and bottom of screen and filter pack.

4.1.9. Type of and quantities of cement and bentonite used, mix ratios of grout, and quantities used.

4.1.10. Elevations of key features of the gas monitoring probe, such as top of casing, top and bottom of protective casing, ground surface, bottom of probe screen, top and bottom of seal(s), and top and bottom of filter pack.

4.1.11. Other pertinent construction details, such as gradation and depth of granular filter pack, quantities of granular filter pack installed, screen type and slot size, and manufacturer of screen.

4.1.12. Probe location by coordinates. A plan sheet shall also be included showing the coordinate system used and the location of each probe. A plan sheet is not required for each installation diagram; multiple probes may be shown on the same sheet.

4.1.13. A brief stratigraphic log showing major changes in lithology and the depths to those changes.

5. **SUBMITTALS.** Contrctng Officer approval is required for submittals with a "GA" designation; submittals having an "FIO" designation are for information only. The following shall be submitted in accordance with SECTION \=01300=\ SUBMITTAL PROCEDURES:

SD-01 Data\
Installation Diagrams\; *FIO*\
Granular Filter Pack\; *FIO*\

6. **MATERIALS.** Materials shall conform to the respective specifications and other requirements presented below.

6.1. **GAS PROBE CASING.** Piping material used in construction of the probes shall consist of 1-inch nominal diameter, flush-joint, threaded, polyvinyl chloride (PVC) plastic. All pipe shall be new. Pipe shall meet the requirements of ASTM D 1785. The minimum wall thickness shall be Schedule 40. Threaded ends shall have a chemically inert O-ring on the male end of the pipe. A threaded airtight cap shall be supplied for the casing. The cap shall be fitted with a sampling port as shown on the drawings.

6.2. **GAS PROBE SCREEN.** A screen shall consist of 1-inch nominal diameter, threaded flush joint, new, Schedule 40, 20 Slot (0.020-inch) factory slotted screen. Screen length for individual probes are as shown on the drawings. The screen shall be joined to the riser casing by a flush threaded joint. The bottom of the screen shall be sealed by a flush-threaded PVC end plug.

6.3. ***GRANULAR FILTER PACK*\.** Filter pack length shall be as shown on the drawings. Granular filter pack material shall meet the requirements for filterpack specified in SECTION \=02910=\ MONITORING WELL INSTALLATION.

6.4. **PROBE SEAL AND GROUT.** Bentonite pellet seal shall be as shown on the drawings. Grout shall consist of a mixture of 94 pounds of Type II Portland Cement, 3 pounds of powdered sodium bentonite and a maximum 8 gallons of water. Cement shall meet the requirements of ASTM C 150.

6.5. **PROTECTIVE COVERS.** Galvanized steel protective casing of 4-inch diameter shall be grouted in place around each gas monitoring probe. The protective casing shall be embedded a minimum of 18 inches below grade. Protective covers shall have a locking lid and keyed alike. Locks shall be provided by the Contractor.

7. **INSTALLATION.**

7.1. ***DRILLING METHOD.*** Borings for gas monitoring probe installation shall be drilled by the hollow stem auger. The drilling method must prevent the collapse of waste material against or within 2 inches of the probe screen and casing during installation of the gas monitoring probe. The drill rig shall be free from leaks of fuel, hydraulic fluid, or oil which may contaminate the working area.

7.2. **WATER SOURCE.** If probe drilling/installation requires the use of water, the water source shall be potable water. The Contractor shall be responsible for obtaining the water from the source and transporting it to the site. The water shall be protected from contamination by oil, organics, acids, alkali, and other deleterious substances.

7.3. **GAS MONITORING PROBE DEPTH.** Depth of borings for the gas monitoring probes shall be as shown on the drawings.

7.4. GAS MONITORING PROBE INSTALLATION. Gas Monitoring Probes shall consist of specified screen, casing, and caps, and all materials shall be new, clean, and in good condition. The probe shall be placed in the hole in such a manner as to avoid jarring impacts and to ensure the assembly is not damaged. The probe shall be installed while the hollow stem auger or temporary casing is still in place in the boring. The probe shall be centered in the hollow stem auger or temporary casing.

7.5. GRANULAR FILTER PACK PLACEMENT. A minimum 1-foot of filter pack shall be placed in the boring prior to installation of the probe. The filter pack shall be placed in such a manner as to ensure continuous, uniform placement around the screen. The hollow stem auger or temporary casing shall be withdrawn from the boring as the filter pack is placed. The level of the filter pack shall not fall below the bottom of the auger or casing during placement of the filter pack. The filter pack shall extend a minimum 1-foot above the top of the screen. All filter pack materials shall be transported to the site in a manner that prevents contamination by other soils, oil and grease, and other chemicals.

7.6. GAS MONITORING PROBE ALIGNMENT. All probes shall be set straight and true to line.

7.7. DRILL CUTTINGS. All drill cuttings produced during drilling operations shall be considered to be contaminated. Cuttings shall be disposed of under the foundation layer of the landfill cap.

7.8. SURFACE COMPLETION. Gas Monitoring Probes shall be completed at the surface with a protective steel casing meeting the requirements of paragraph 6.5 Protective Covers of this specification. A concrete pad, 2' X 2' square x 6" thick shall be placed around each gas monitoring probe.

8. PROTECTION OF EXISTING FACILITIES. The Contractor shall protect and maintain existing structures, survey monuments and all gas monitoring probes from damage from equipment and vehicular traffic. Any damage shall be repaired by the Contractor. Any gas monitoring probes requiring replacement shall be replaced according to these specifications.

SECTION 02271

GEOMEMBRANE

07/95

INDEX

PART 1 GENERAL
- 1.1. REFERENCES
- 1.2. NOT USED
- 1.3. NOT USED
- 1.4. QUALIFICATIONS
- 1.5. SUBMITTALS
- 1.6. DELIVERY, STORAGE AND HANDLING
- 1.7. WEATHER LIMITATIONS
- 1.8. EQUIPMENT

PART 2 PRODUCTS
- 2.1. MATERIALS
- 2.2. TESTS, INSPECTIONS, AND VERIFICATIONS

PART 3 EXECUTION
- 3.1. PREPARATION
- 3.2. GEOMEMBRANE DEPLOYMENT
- 3.3. FIELD SEAMING
- 3.4. PENETRATIONS
- 3.5. PROTECTION
- 3.6. AS-BUILT DRAWINGS

SECTION 02271

GEOMEMBRANE
07/95

PART 1. GENERAL

1.1. REFERENCES

The publications listed below form a part of the specification to the extent referenced. The publications are referenced in the text by basic designation only.

AMERICAN SOCIETY FOR TESTING AND MATERIALS (ASTM)

\-ASTM D 638-\	(1991) Tensile Properties of Plastics
\-ASTM D 1004-\	(1993) Initial Tear Resistance of Plastic Film and Sheeting
\-ASTM D 1505-\	(1985, R1990) Density of Plastics by the Density-Gradient Method
\-ASTM D 1603-\	(1994) Carbon Black in Olefin Plastics
\-ASTM D 1765-\	(1994a) Classification System for Carbon Blacks Used in Rubber Products
\-ASTM D 4437-\	(1984; R 1988) Determining the Integrity of Field Seams Used in Joining Flexible Polymeric Sheet Geomembranes
\-ASTM D 4833-\	(1988) Index Puncture Resistance of Geotextiles, Geomembranes, and Related Products
\-ASTM D 5199-\	(1991) Measuring Nominal Thickness of Geotextiles and Geomembranes
\-ASTM D 5321-\	(1992) Determining the Coefficient of Soil and Geosynthetic or Geosynthetic and Geosynthetic Friction by the Direct Shear Method
\-ASTM D 5397-\	(1995) Evaluation of Stress Crack Resistance of Polyolefin Geomembranes Using Notched Constant Tensile Load Test
\-ASTM D 5596-\	(1994) Microscopic Evaluation of the Dispersion of Carbon Black in Polyolefin Geosynthetics

\-ASTM D 5994-\ (1996) Measuring the Core Thickness of Textured Geomembranes

GEOSYNTHETIC RESEARCH INSTITUTE (GRI)

\-GM 12-\ Asperity Measurement of Textured Geomembranes Using a Depth Gage

1.2. NOT USED
1.3. NOT USED

1.4. *QUALIFICATIONS*

1.4.1. Manufacturer

Manufacturer shall have produced the proposed geomembrane sheets for at least five completed projects having a total minimum area of 2 million square feet.

1.4.2. NOT USED

1.4.3. Installer

The Installer is responsible for field handling, deploying, seaming, anchoring, and field quality control testing of the geomembrane. The Installer shall have installed the proposed geomembrane material for at least five completed projects having a total minimum area of 2 million square feet. At least one seamer shall have experience seaming a minimum of 500,000 square feet of the proposed geomembrane using the same type of seaming equipment and geomembrane thickness specified for this project.

1.4.4. Quality Control (QC) Inspector

The QC Inspector is the person or company, hired by the Contractor, who is responsible for monitoring and documenting activities related to the quality control of the geomembrane from manufacturing through installation. The QC Inspector shall have provided quality control inspection during installation of the proposed geomembrane for at least five completed projects having a total minimum area of 2 million square feet.

1.4.5. Quality Control Laboratory

The contractor shall obtain the services of a QC laboratory, which is responsible for laboratory quality control geomembrane testing. The QC laboratory shall have provided quality control and/or quality assurance testing of the proposed geomembrane and geomembrane seams for at least five completed projects having a total minimum area of 2 million square feet. The laboratory shall be accredited via the Geosynthetic Accreditation Institute's Laboratory Accreditation Program (GAI-LAP).

1.5. SUBMITTALS

Contracting Officer approval is required for submittals with a "GA" designation, submittals having an "FIO" designation are for information only. The following shall be submitted in accordance with SECTION \=01300=\ SUBMITTAL PROCEDURES:

SD-01 Data\

Raw Materials\; *GA*\.

Manufacturer's certified raw material test reports along with a copy of quality control certificates a minimum of 21 days prior to delivery of geomembrane to the site.

Sheet Materials\; *GA*\.

Manufacturer's certified sheet material test reports and a copy of quality control certificates to certify compliance with the physical properties list in Table 1 a minimum of 21 days prior to delivery of geomembrane to the site.

SD-04 Drawings\

Layout and Detail Drawings\; *GA*\.

Geomembrane panel layout and penetration detail drawings a minimum of 30 days prior to delivery of geomembrane to the site.

As-built Drawings\; *GA*\.

Final as-built drawings of geomembrane installation showing panel/sheet numbers, seam numbers, and location of repairs, destructive seam samples, and penetrations.

SD-06 Instructions\

Tests, Inspections, and Verifications\; *GA*\.

Manufacturer's quality control manuals.

Field Seaming\; *GA*\.

Installer's quality control manual.

SD-08 Statements\

Qualifications\; *GA*\.

Manufacturer's, Installer's, QC Inspector's, QC Laboratory's qualification statements including resumes of key personnel involved in the project.

SD-09 Reports\

Interface Direct Shear Testing\; *GA*\.

Certified laboratory interface direct shear test results including description of equipment and test methods a minimum of 21 days prior to delivery of geomembrane to the site.

Non-Destructive Field Seam Testing\; *GA*\.

QC Inspector certified test results on all field seams.

Destructive Field Seam Testing\; *GA*\.

QC Inspector certified test results on all destructively tested seams prior to acceptance of the seams.

Destructive Seam Test Repairs\; *GA*\.

QC Inspector certified test results on all repaired seams prior to covering the seamed areas.

1.6. DELIVERY, STORAGE AND HANDLING

Geomembrane rolls shall be off-loaded in the presence of the QC Inspector and Contracting Officer. The geomembrane shall be protected from puncture, abrasion, excessive heat or cold, material degradation, adhesion of individual layers or other damaging circumstances. Pushing, sliding, or dragging of geomembrane rolls shall not be permitted. Temporary storage at the project site shall be in an area where standing water cannot accumulate at any time. Storage shall be performed without crushing the core of roll goods or flattening of the rolls. An opaque and waterproof covering shall be provided over the stored geomembrane for protection against precipitation, ultraviolet exposure, and accidental damage. Damaged geomembrane shall be removed from the site.

1.7. WEATHER LIMITATIONS

Geomembrane shall be deployed and field-seamed only when the geomembrane is dry and winds are low such that the geomembrane is not uplifted and damaged. Unless authorized by the Contracting Officer, no seaming shall be attempted at ambient temperatures below 32 degrees Fahrenheit or above 104 degrees Fahrenheit. In marginal conditions, as determined by the Contracting Officer, deployment and seaming shall cease unless destructive field seam tests, conducted by the QC Laboratory, confirm that satisfactory seam strengths are being obtained.

1.8. EQUIPMENT

Equipment used in performance of the work shall be in accordance with the geomembrane manufacturer's recommendations and shall be maintained in satisfactory working condition.

PART 2. PRODUCTS

2.1. MATERIALS

2.1.1. *Raw Materials*\

Resin used in manufacturing polyethylene geomembranes shall be made of virgin uncontaminated ingredients. No more than 10 percent regrind, reworked, or trim material in the form of chips or edge strips shall be used to manufacture the geomembrane sheets. All regrind, reworked, or trim materials shall be from the same manufacturer and exactly the same formulation as the geomembrane sheet being produced. No post consumer materials shall be used. The Contractor shall submit a copy of the test reports and quality control certificates for all materials used in the manufacturing of the geomembrane shipped to the site.

2.1.2. *Sheet Materials*\

A sheet is defined as a manufactured seamless geomembrane unit with a width equal to or greater than 15 feet. Geomembrane sheets shall be uniform in color, thickness, and surface texture and shall meet the physical property requirements in Table 1. Sheets installed on 1V to 4H cover system side slopes shall be textured on both sides. Smooth sheets shall be installed on the cover systems 4 percent top slopes as indicated on the drawings. The geomembrane manufacturer shall label each roll of geomembrane with roll numbers and manufacture dates. The sheets shall be free of, and resistant to, fungal or bacterial attack and they shall be free of cuts, abrasions, holes, blisters, contaminants and other imperfections.

2.1.3. *Layout and Detail Drawings*\

The Contractor shall produce geomembrane panel layout and penetration detail drawings which show geomembrane panel configuration, dimensions, details, and seam locations. The Contractor shall not seam any panels in the field or provide seams not specifically shown on the layout drawing without Contracting Officer approval.

2.1.4. Geomembrane Physical Properties

Geomembrane sheets shall conform to the physical requirements listed in Table 1 for manufacturing quality control. Field seam properties shall conform to the requirements listed in Table 2. No factory seeming of sheets shall be allowed.

TABLE 1. GEOMEMBRANE SHEET PROPERTIES

Property	Test Method	Test Value		Testing Frequency (min)
		Smooth	Text.	
Thickness, mils (nominal)	ASTM D 5199	40	40	Per Roll
Thickness, mils (min.)	ASTM D 5199 ASTM D 5994	36	 36	Per Roll
Asperity Height, mils (min. avg.)	GM 12	NA	7	Per Roll
Density, g/ml (min.)	ASTM D 1505	0.940	0.940	per 200,000 lb
Tensile Properties, (min. ave) (Note 1) -yield stress (lb/in.) -break stress (lb/in.) -yield elong. (%) -break elong. (%)	ASTM D 638 Type IV	 84 150 12 700	 84 60 12 100	Per 20,000 lb
Tear Resistance, lb (min. ave.)	ASTM D 1004	28	28	Per 45,000 lb
Puncture Resistance, lb (min. ave.)	ASTM D 4833	72	60	Per 45,000 lb
Stress Crack Resistance, hr (Note 2)	ASTM D 5397 (App.)	200	200	Per 200,000 lb
Carbon Black Content, %	ASTM D 1603 (Note 3)	2.0-3.0	2.0-3.0	Per 20,000 lb
Carbon Black Dispersion	ASTM D 5596	Note 4	Note 4	Per 45,000 lb

Note 1: Machine direction and cross machine direction average values shall be based on 5 test specimens each direction.
Yield elongation is calculated using a gage length of 1.3 inches.
Break elongation is calculated using a gage length of 2.0 inches.

Note 2: The yield stress used to calculate the applied load for test method ASTM D 5397 (App.) shall be the manufacturer's mean value. For textured geomembrane, test should be conducted on smooth edges of textured sheet.

Note 3: Other methods, such as D 4128 or micro wave methods are acceptable if an appropriate correlation can be established.

Note 4: Carbon black dispersion for 10 different views:
-Minimum 8 of 10 in Categories 1 or 2
-All 10 in Categories 1, 2, or 3

TABLE 2
GEOMEMBRANE FIELD SEAM PROPERTIES

Property	Test Method	Test Value	
		Smooth	Textured
Seam Shear Strength lbs./in. width (min)	ASTM D 4437	80	70
Seam Peel Strength lbs./in. width (min.)	ASTM D 4437	48	38
Shear Elongation, % (min.) (Note 1)	ASTM D 4437	100	100

Note 1: Shear elongation shall exceed 100 percent of the distance between the edge of the seam and the nearer grip of the sheet in which failure occurs.

2.2. *TESTS, INSPECTIONS, AND VERIFICATIONS*\

2.2.1. \+*Interface Direct Shear Testing*\+\

One set of laboratory interface direct shear tests shall be performed on the textured geomembrane to geosynthetic clay liner interface according to \-ASTM D 5321-\. The textured geomembrane to non-woven geotextile side of the geosynthetic clay liner interface shall be tested. Testing shall be performed on the same materials and at the same orientation as will be utilized in construction. Samples used in testing shall be representative of the materials that will be utilized in construction. Normal stresses of 1.5, 3.0, and 5.0 psi along with a displacement rate of 0.04 inches per minute shall be used. The geosynthetic clay liner and geomembrane shall be hydrated as specified in SECTION \=02442=\ GEOSYNTHETIC CLAY LINER prior to shearing. Geosynthetics shall be oriented such that the shear force is parallel to the downslope orientation of these components in the field. A minimum peak interface friction angle of 18 degrees is required between materials placed on the 1V on 4H side slopes. No interface friction testing is required for the cover system cross section placed on the 4 percent top slopes of the cap. Certified QC Laboratory tests results shall be provided to the Contracting Officer for approval 21 days prior to delivery of materials to the site.

2.2.2. Manufacturing, Sampling, and Testing

2.2.2.1. Resin Materials

Resin shall be tested in accordance with the approved geomembrane manufacturer's quality control manual. Any resin which fails to meet the geomembrane manufacturer's specified physical properties shall not be accepted for manufacturing the sheet. Polyethylene seaming rod and pellets shall be manufactured of resin which is essentially identical to that used in the geomembrane sheet. Seaming rods and pellets shall be tested for density, melt index and carbon black content in accordance with the approved geomembrane

manufacturer's quality control manual. Seaming rods and pellets which fail to meet the corresponding property values required for the sheet material, shall be rejected.

2.2.2.2. Geomembrane Sampling

Geomembrane sheets shall be sampled and tested as specified in Table 1. If the specific manufacturer's QC practice is more stringent, it shall be followed in like manner. Sheets not meeting the minimum requirements specified in Table 1 shall be rejected.

PART 3. EXECUTION

3.1. PREPARATION

3.1.1. Surface Preparation

Surface preparation for the geosynthetic layers shall be performed in accordance with SECTION \=02211=\ EXCAVATION, INITIAL GRADING, AND RANDOM AND FOUNDATION FILL FOR LANDFILL COVER SYSTEMS. Rocks larger than 1/2 inch in diameter and any other debris which could damage geosynthetics shall be removed from the surfaces to be covered with geosynthetics. Any damage to the subgrade caused by the Contractor's operations shall be repaired prior to geosynthetic placement.

3.1.2. Anchor Trenches

Geosynthetic materials shall be anchored in trenches at locations shown on the drawings. Adequate drainage to prevent ponding of water or softening of adjacent soils shall be provided while the trench is open. Trench corners shall be slightly rounded to avoid sharp bends in the geomembrane.

3.2. Geomembrane Deployment

Textured geomembrane shall be placed on the 1V to 4H side slopes and shall extend a minimum distance of 10 feet onto the 4 percent top slope as indicated on the drawings. Smooth geomembrane shall be utilized on all other areas of the 4 percent top slope as indicated on the drawings.

Geomembrane shall be placed with minimum handling. The procedures and equipment used shall not damage the geomembrane or underlying subgrade. Geomembrane damaged during installation shall be removed and replaced or repaired, at the Contracting Officer's discretion and as specified in paragraph: PATCHES. Only geomembrane that can be anchored and seamed together the same day shall be deployed. Adequate ballast (e.g., sand bags) shall be placed on the geomembrane to prevent uplift by wind without damaging the geomembrane. Only small rubber tired equipment, with maximum tire inflation pressures of 5 lb per square inch, shall be allowed directly on the geomembrane. Geomembrane panels shall be placed up slope to down slope. The method used to deploy the geomembrane shall not scratch, crimp or excessively elongate the geomembrane as determined by the QC Inspector. Seams shall be oriented parallel to the line of maximum slope. Where seams can only be oriented across the slope, the upper panel shall be lapped over the lower panel.

3.2.1. Geomembrane Wrinkles

The method used to deploy the geomembrane and backfill over it shall minimize wrinkles and tensile stresses in the geomembrane and its seams during installation and after the geomembrane is covered. The geomembrane shall have adequate slack to prevent uplift from the subgrade or substrate material at any location. To minimize the potential for differential wrinkles (i.e., fishmouths) between panels, no panel shall be installed next to a panel under tension. To prevent geomembrane waves from folding over during placement of overlying materials, the height to width ratio of installed geomembrane waves shall not exceed 0.5. Regardless of the height to width ratio, geomembrane waves shall not exceed 6 inches in height. The installer shall cut out and reseam any wave areas which are determined to be unacceptable by the Contracting Officer, in accordance with the Installer's Quality Control manual.

3.2.2. Thickness Measurement

For non-textured geomembrane, a minimum of five thickness readings shall be taken along the edge across each panel width and at least two thickness measurements shall be taken along each panel length in accordance with \-ASTM D 5199-\. For textured geomembrane, the same number of thickness readings specified for the non-textured geomembrane shall be taken in accordance with \-ASTM D 5994-\. Panels whose thickness falls below the specified minimum value shall be rejected and replaced.

3.3. *FIELD SEAMING*\

3.3.1. Trial Seams

Trial seams shall be made on test strips of excess geomembrane under field conditions to verify that seaming conditions are adequate. Trial seams shall be made each day prior to production seaming, whenever there is a change in seaming personnel or seaming equipment, and at least once every five hours, by each seamer and for each piece of seaming equipment used that day. In addition, trial seams shall be made whenever the ambient temperature changes by more than 20 degrees Fahrenheit within a seaming period. One sample shall be obtained from each trial seam. This sample shall be at least 36 inches long by 20 inches wide with the seam centered lengthwise. Ten random specimens 1 inch wide shall be cut from the sample. Five seam specimens shall be tested for shear strength and five for peel strength using an approved quantitative tensiometer. Jaw separation speed shall be in accordance with the Installer's approved quality control manual. To be acceptable, four out of five replicate test specimens shall meet specified seam strength requirements in Table 2. If the field tests fail to meet these requirements, the entire operation shall be repeated. If the additional trial seam fails, the seaming apparatus or seamer shall not be accepted or used for seaming until the deficiencies are corrected by the Installer and two consecutive successful trial seams are achieved.

3.3.2. Field Seams

3.3.2.1. General Requirements

Panels shall be overlapped a minimum of 3 inches, or as recommended by the geomembrane manufacturer. In corners and odd-shaped geometric locations, the number of field seams shall be minimized. Seaming shall extend to the outside edge of panels. Seaming shall not be conducted in the presence of standing water and/or soft subgrades as determined by the QC Inspector. Wet surfaces shall be thoroughly dried and soft subgrades compacted and approved by the Installer, QC Inspector, and Contracting Officer prior to seaming. The seam area shall be cleaned of dust, dirt, and foreign material prior to and during seaming. The Installer shall measure ambient temperatures, seeming apparatus temperatures, and fusion seaming apparatus speeds during seaming operations.

3.3.2.2. Seaming Method

Seaming shall be by thermal fusion methods. Unless otherwise approved by the Contracting Officer, extrusion welding shall only be used for patching and seaming around appurtenances. If seam overlap grinding is required, the grinding marks shall be oriented perpendicular to the seam direction and no marks shall extend beyond the extrudate after placement. The depth of the grinding marks shall be no greater than 10 percent of the sheet thickness. Extrusion welding shall begin within 10 minutes after grinding. Where extrusion fillet welds are temporarily terminated long enough to cool, they shall be ground prior to applying new extrudate over the existing seam.

3.3.3. Field Sampling and Testing

3.3.3.1. *Non-Destructive Field Seam Testing*\

Field seams shall be non-destructively tested over their full length in accordance with the Installer's approved quality control manual to ensure seam continuity. Seam testing shall be performed as the seaming work progresses, not at the completion of field seaming. Any seams which fail shall be documented and repaired in accordance with the installer's approved quality control manual.

3.3.3.2. *Destructive Field Seam Testing*\

A minimum of one destructive test sample per 1,000 feet of field seam shall be obtained at locations specified by the Contracting Officer. The Contracting Officer may require additional tests or designate test locations if seam quality is suspect. Sample locations shall not be identified prior to seaming. Samples shall be a minimum of 12 inches wide by 42 inches long with the seam centered lengthwise. Each sample shall be cut into three equal pieces with one piece retained by the Installer, one piece given to the QC Laboratory, and the remaining piece given to the Contracting Officer for possible quality assurance testing and permanent record. Each sample shall be numbered and cross referenced to a field log which identifies: (1) panel number; (2) seam number; (3) top sheet; (4) date and time cut; (5) ambient temperature within 6 inches above the geomembrane; (6) seaming unit designation; (7) name of seamer; and (8) seaming apparatus temperature and pressures (where applicable). Ten 1 inch wide

replicate specimens shall be cut from the Installer's sample. Five specimens shall be tested for shear strength and five for peel strength using an approved field quantitative tensiometer. Jaw separation speed shall be in accordance with the installer's approved quality control manual. To be acceptable, four out of five replicate test specimens shall meet the specified seam strength requirements. If the field tests pass, five specimens shall be tested at the QC Laboratory for shear strength and five for peel strength in accordance with \-ASTM D 4437-\. To be acceptable, four out of five replicate test specimens shall meet specified seam strength requirements. If the field or laboratory tests fail, the seam shall be repaired in accordance with paragraph Destructive Seam Test Repairs. In addition, destructive seam sample holes shall be repaired the same day as cut.

3.3.4. Defects and Repairs

3.3.4.1. *Destructive Seam Test Repairs*\

Seams that fail destructive seam testing shall be retraced to an intermediate location a minimum of 10 feet on each side of the failed seam location. At each location, a 12 by 18 inch minimum size seam sample shall be taken for two additional shear strength and two additional peel shear tests using an approved quantitative field tensiometer. If these tests pass, then the remaining seam sample portion shall be sent to the independent laboratory for five shear strength and five peel shear tests in accordance with \-ASTM D 4437-\. To be acceptable, four out of five replicate test specimens must meet specified seam strength requirements. If these laboratory tests pass, then the seam shall be cap stripped between that location and the original failed location. After cap stripping, the entire cap stripped seam shall be non-destructively tested. If field or laboratory tests fail, then the process is repeated. In any case, all failing destructive test locations shall be bounded by two locations from which samples passing laboratory destructive tests have been obtained. Whenever a sample fails, the Contracting Officer may require additional tests for seams that were formed by the same seamer and/or seaming apparatus or seamed during the same time shift at the expense of the Contractor.

3.3.4.2. Patches

Tears, holes, blisters and areas with undispersed raw materials or foreign material contamination shall be repaired with patches. Patches shall have rounded corners, be made of the same geomembrane, and extend a minimum of 6 inches beyond the edge of defects. Minor localized flaws shall be repaired by spot welding or seaming as determined by the Contracting Officer. Repairs shall be non-destructively tested. The QC Inspector and Contracting Officer may also elect to perform a destructive seam test on a suspect area.

3.3.4.3. Visual Inspection and Evaluation

Immediately prior to covering the geomembrane, seams and non-seam areas shall be visually inspected by the QC Inspector and Contracting Officer for defects, holes, or damage. At the QC Inspector or Contracting Officer's discretion, the surface of the geomembrane shall be brushed, blown, or washed by the installer if the amount of dust, mud, or foreign material inhibits inspection or

functioning of the overlying material. Each suspect location shall be non-destructively tested. Each location that fails non-destructive testing shall be repaired in accordance with paragraph: PATCHES and non-destructively tested prior to acceptance.

3.4. PENETRATIONS

Geomembrane penetration details shall be as recommended by the geomembrane manufacturer or Installer, and as approved by the Contracting Officer. Factory fabricated boots shall be used wherever possible. Tailored area field seams shall be non-destructively tested in accordance with the Installer's approved quality control manual. Seams that fail non-destructive testing shall be repaired in accordance with the Installer's approved quality control manual and non-destructively tested prior to acceptance.

3.5. PROTECTION

The deployed and seamed geomembrane shall be covered with the geocomposite within 10 days of acceptance. Permanent folding over of geomembrane wrinkles shall not be allowed prior to or during placement of overlying materials.

3.6. *AS-BUILT DRAWINGS*\

Prior to placement of overlying materials, an as-built record drawing shall be prepared for the geomembrane installation. The drawing shall include panel identification information, the location of panels, dates of panel installation, location of seams, repairs, penetrations, and test locations.

SECTION 02273

GEOCOMPOSITE

INDEX

PART 1 GENERAL
1.1. REFERENCES
1.2. SUBMITTALS
1.3. QUALIFICATIONS
1.4. DELIVERY, STORAGE AND HANDLING

PART 2 PRODUCTS
2.1. GEONET
2.2. GEOTEXTILE
2.3. BOND PROPERTIES
2.4. SAMPLING AND TESTING

PART 3 EXECUTION
3.1. INSTALLATION
3.2. REPAIRS
3.3. PENETRATIONS
3.4. FINAL COVER

SECTION 02273

GEOCOMPOSITE

PART 1. GENERAL

1.1. REFERENCES

Publications listed below form a part of this specification section to the extent referenced. Publications are referenced in the text by basic designation only.

AMERICAN SOCIETY FOR TESTING AND MATERIALS (ASTM)

\-ASTM D 413-\	(1982; R 1993) Rubber Property - Adhesion to Flexible Substrate
\-ASTM D 1238-\	(1994a) Flow Rates of Thermoplastics by Extrusion Plastometer
\-ASTM D 1505-\	(1990) Density of Plastics by the Density-Gradient Technique
\-ASTM D 3786-\	(1989) Hydraulic Bursting Strength of Knitted Goods and Nonwoven Fabrics-Diaphragm Bursting Strength Tester Method
\-ASTM D 4218-\	(1991) Determination of Carbon Black Content in Polyethylene Compounds by the Muffle-Furnace Technique
\-ASTM D 4354-\	(1989) Sampling of Geosynthetics for Testing
\-ASTM D 4355-\	(1992) Deterioration of Geotextiles from Exposure to Ultraviolet Light and Water (Xenon-Arc Type Apparatus)
\-ASTM D 4491-\	(1992) Water Permeability of Geotextiles by Permittivity
\-ASTM D 4533-\	(1991) Trapezoid Tearing Strength of Geotextiles
\-ASTM D 4632-\	(1991) Grab Breaking Load and Elongation of Geotextiles
\-ASTM D 4716-\	(1987) Constant Head Hydraulic Transmissivity (In-Plane Flow) of Geotextiles and Geotextile Related Products

\-ASTM D 4751-\	(1987) Determining the Apparent Opening Size of a Geotextile
\-ASTM D 4759-\	(1988; R1992) Determining the Specification Performance of Geosynthetics
\-ASTM D 4833-\	(1988) Index Puncture Resistance of Geotextiles, Geomembranes, and Related Products
\-ASTM D 5035-\	(1995) Breaking Strength and Elongation of Textile Fabrics (Strip Method)

1.2. SUBMITTALS

Contracting Officer approval is required for submittals with a "GA" designation; submittals having an "FIO" designation are for information only. The following shall be submitted in accordance with specification section \=01300=\ SUBMITTAL PROCEDURES:

SD-01 Data\

Bond Properties\; *GA*\. (see paragraph 2.3)

Manufacturer's certified data sheets for bond adhesion.

SD-06 Instructions\

Sampling and Testing\; *GA*\. (see paragraph 2.4)

Geonet and geotextile manufacturers' quality control (QC) manuals.

Penetrations\; *GA*\. (see paragraph 3.3.)

The Contractor shall submit for approval drawings depicting all penetrations through the geocomposite. Drawings shall be of sufficient detail to accurately show size and dimensions of all penetrating materials and the size of all openings in the geocomposite. The method of cutting the geocomposite shall also be indicated. All information shall be submitted a minimum of 14 days prior to construction of the first penetration.

SD-08 Statements\

Qualifications\; *GA*\. (see paragraph 1.3)

QC Inspector and QC Laboratory qualification statements to include resumes of key personnel involved in the project.

SD-09 Reports\

Geonet\; *GA*\. (see paragraph 2.1)

Manufacturer's certified raw and roll material test results. Test results not meeting the requirements in Table 1 shall result in rejection of the applicable rolls. Certified test results shall be provided a minimum of 21 days prior to delivery to the site.

Geotextile\; *GA*\. (see paragraph 2.2)

Manufacturer's certified raw and roll material test results. Test results not meeting the requirements in Table 2 shall result in rejection of the applicable rolls. Certified test results shall be provided a minimum of 21 days prior to delivery to the site. For needle punched geotextiles, the manufacturer shall also certify that the geotextile has been continuously inspected using permanent on-line full-width metal detectors and does not contain any needles which could damage other geosynthetic materials.

SD-14 Samples\

Overlap and Fasteners\; *GA*\. (see paragraph 3.1.2.1.)

The Contractor shall submit five (5) samples of each type of geocomposite fastener proposed for connecting geocomposite overlaps for approval. Proposed fasteners shall be submitted a minimum of 21 days prior to delivery to the site for full-scale production.

1.3. *QUALIFICATIONS*\

1.3.1. Quality Control (QC) Inspector.

The QC Inspector shall consist of a person furnished by the Contractor who shall have the sole responsibility of performing inspections for the purpose of monitoring and controlling the quality of geocomposite installation. The QC Inspector shall assist the Contracting Officer in obtaining samples for verification testing.

1.3.2. Quality Control (QC) Laboratory.

The Contractor shall obtain the services of a QC Laboratory, which is responsible for laboratory quality control testing. The QC Laboratory shall have provided quality control and/or quality assurance testing of a similar geocomposite material for at least five completed projects having a total minimum area of 2 million square feet. The laboratory shall be accredited via the Geosynthetic Accreditation Institute's Laboratory Accreditation Program (GAI-LAP).

1.4. DELIVERY, STORAGE AND HANDLING

Geocomposite materials shall be packaged, shipped, stored and handled in such a manner that no damage is incurred. Geocomposite rolls shall be stacked not

more than 2 rolls high. Under no circumstances shall the geocomposite be dragged across a textured geomembrane. Materials shall be delivered only after the required submittals have been received and approved by the Contracting Officer. The Contractor shall be responsible for keeping the geocomposite free of dirt, dust, mud, or any other foreign materials. Any geocomposite material found to be damaged shall be replaced with new material. Each roll shall be labelled with the Manufacturer's name, product identification, lot number, roll number, and roll dimensions.

PART 2. PRODUCTS

2.1. *GEONET*

The polymer used to manufacture the geonet shall be non-thermally degraded polyethylene which is clean and free of any foreign contaminants. Regrind material which consists of edge trimmings and other scraps that have never reached the consumer may be used to manufacture the geonet; however, post-consumer recycled materials shall not be used. The manufactured geonet shall conform to the property requirements listed in Table 1 and shall be free of defects including tears, nodules or other manufacturing defects which may affect its serviceability.

The geonet shall be covered on both sides with a geotextile which complies with requirements in paragraph: GEOTEXTILE.

TABLE 1. GEONET PROPERTIES

PROPERTY	TEST METHOD	TEST VALUE
Carbon Black Content	\-ASTM D 4218-\	2-3 percent
Tensile Strength, (minimum)	\-ASTM D 5035-\	25 lbs/in.
Transmissivity, minimum (Note 1)	\-ASTM D 4716-\	20 gal/min/ft
Melt Flow Index	\-ASTM D 1238-\ condition 190/2.16	1.0 g/10 min.
Density	\-ASTM D 1505-\	0.930 g/cm3

NOTES:

1. Transmissivity shall be measured using water at 68 degrees F with a gradient of 0.1 under a normal pressure of 1.45 psi. Geotextiles shall be attached to the geonet in the same configuration as that used for full-scale construction. The drainage net shall be sandwiched between a 40 mil smooth geomembrane on the bottom and closed-cell foam rubber on the top. A minimum seating period of 60 minutes shall be used.

2.2. \GEOTEXTILE\

Geotextiles shall be a nonwoven pervious sheet of polymeric material and shall consist of long-chain synthetic polymers composed of at least 95% by weight polypropylene or polyester. Stabilizers and/or inhibitors shall be added to the base polymer if necessary to make the filaments resistant to deterioration by ultraviolet light, oxidation, and heat exposure. Regrind material which consists of edge trimmings and other scraps which have never reached the consumer may be used to produce the geotextile. Post-consumer or recycled material fibers or polymer shall not be used. Geotextile shall be formed into a network such that the filaments or yarns retain dimensional stability relative to each other, including the salvages. Geotextile physical properties shall equal or exceed the minimum average roll values listed in Table 2. Acceptance of geotextiles shall be in accordance with \-ASTM D 4759-\. Strength values shown are for the weaker principal direction.

TABLE 2. LINER SYSTEM
PHYSICAL PROPERTIES OF GEOTEXTILE USED FOR GEOCOMPOSITE

PROPERTY	TEST METHOD	TEST VALUE
Apparent Opening Size (U.S. Sieve Number)	\-ASTM D 4751-\	70-100
Permittivity, sec^{-1}	\-ASTM D 4491-\	1.0
Puncture, lbs.	\-ASTM D 4833-\	80
Grab Tensile, lbs.	\-ASTM D 4632-\	180
Trapezoidal Tear, lbs.	\-ASTM D 4533-\	75
Burst Strength, psi	\-ASTM D 3786-\	130
Ultraviolet Degradation (percent strength retained at 500 hours)	\-ASTM D 4355-\	70

2.2.1. Thread

Sewn seams shall be constructed with high-strength polyester or nylon. Thread shall have equivalent ultraviolet light stability as the geotextile and the color shall contrast with the geotextile.

2.3. *BOND PROPERTIES*\

A geocomposite shall be created by heat bonding geotextiles to the geonet with ply adhesion meeting the requirements of \-ASTM D 413-\. The bond between the geotextile and the geonet shall exhibit a minimum peel strength of 2 lbs/inch.

2.4. *SAMPLING AND TESTING*\

2.4.1. General Requirements.

Geonet and geotextile testing shall be performed by a laboratory approved by the Contracting Officer. The geonet and geotextile shall be randomly sampled and tested in accordance with the manufacturers' approved Quality Control Manual. A minimum of one transmissivity test shall be performed for every 100,000 square feet of geocomposite placed in accordance with requirements specified in Table 1. As a minimum, geotextiles shall be randomly sampled for testing in accordance with \-ASTM D 4354-\ (Procedure A).

PART 3. EXECUTION

3.1. INSTALLATION

3.1.1. Surface Preparation.

Prior to placement of the geocomposite, the surface of the geomembrane shall be cleaned of all soil, rock, and other materials which could damage the geocomposite.

3.1.2. Placement.

The Installer shall deploy the geocomposite ensuring that the geocomposite and underlying materials are not damaged. The geocomposite shall be cut using scissors, hooked blade, or other cutting tools that will not damage underlying geosynthetics, as approved by the Contracting Officer. Faulty or damaged geocomposite material shall be replaced or repaired as specified in paragraph 3.2, REPAIRS.

The geocomposite shall be unrolled downslope keeping the material in slight tension to minimize wrinkles and folds. The geocomposite shall not be dragged across a textured geomembrane. The geocomposite shall be maintained free of dirt, mud, or any other foreign materials at all times during construction. Rolls which are contaminated with these materials shall be cleaned or replaced to the satisfaction of the Contracting Officer at no cost to the Owner. Adequate loading (e.g. sandbags) shall be placed to prevent uplift by wind.

3.1.2.1. *Overlap and Fasteners*\.

Adjacent rolls shall be overlapped a minimum of 6 inches. Fasteners, as recommended by the Manufacturer and approved by the Contracting Officer, shall be used to join adjacent rolls. Metallic fasteners shall not be allowed. Fasteners shall be spaced a maximum of 5 feet along downslope roll overlaps and a maximum of 2 feet along cross slope roll overlaps. Fasteners shall be of contrasting color from the geocomposite to facilitate visual inspection. Geocomposite drainage materials shall not be welded to geomembranes.

3.2. REPAIRS

The final decision regarding appropriate repair shall be agreed upon between the CQ Inspector and Contracting Officer. Prior to acceptance of the geocomposite material, the Installer shall locate and repair all damaged areas directed by the Contracting Officer. Care shall be taken to carefully remove any soil or other materials which may have penetrated the torn geotextile or geonet. If the damage is assessed by the Contracting Officer to be small, typically less than 3 feet by 3 feet, the geocomposite material shall be repaired as follows:

If the Contracting Officer determines the geonet to be undamaged but the geotextile is damaged, a patch of geotextile shall be thermally bonded in place with a minimum overlap of 12 inches in all directions.

If the Contracting Officer determines the geonet to be damaged, the damaged section of geocomposite material shall be removed. A section of undamaged geonet shall be cut to replace the removed section of geonet. The geonet shall be tied to the existing geonet using white or yellow plastic fasteners placed at least every 6 inches of overlap. A geotextile patch consisting of the same type of geotextile material comprising the original geocomposite shall be thermally bonded in place with a minimum overlap of 12 inches in all directions.

On side slopes, any tear which exceeds 10 percent of the width of the roll shall be removed and replaced.

If the Contracting Officer determines the defect to be large, typically 3 feet by 3 feet or greater, the damaged section of geocomposite material shall be replaced as directed by the Contracting Officer.

All repairs shall be performed to the satisfaction of the Contracting Officer at no cost to the contract.

3.3. *PENETRATIONS*\

Geocomposite penetration details shall be as recommended by the Manufacturer and approved by the Contracting Officer.

3.4. FINAL COVER

Upon completion of geocomposite installation in a given area and acceptance of the geocomposite by the Contracting Officer, the geocomposite shall be covered with the specified overlying material within 14 days of acceptance.

SECTION 02442

GEOSYNTHETIC CLAY LINER (GCL)

PART 1 GENERAL
1.1. REFERENCES
1.2. SUBMITTALS
1.3. QUALIFICATIONS
1.4. DELIVERY, STORAGE, AND HANDLING

PART 2 PRODUCTS
2.1. FOUNDATION LAYER REQUIREMENTS
2.2. GCL PROPERTIES

PART 3 EXECUTION
3.1. TESTS, INSPECTIONS, AND VERIFICATIONS
3.2. SITE VERIFICATION SAMPLING AND TESTING
3.3. INSTALLATION
3.4. REPAIRS
3.5. PENETRATIONS
3.6. COVERING

SECTION 02442

GEOSYNTHETIC CLAY LINER (GCL)

PART 1. GENERAL

1.1. REFERENCES

Publications listed below form a part of this specification section to the extent referenced. Publications are referenced in the text by basic designation only.

AMERICAN SOCIETY OF TESTING AND MATERIALS (ASTM)

\-ASTM D 1193-\	(1991) Reagent Water
\-ASTM D 2216-\	(1992) Laboratory Determination of Water (Moisture) Content of Soil and Rock
\-ASTM D 4595-\	(1986) Tensile Properties of Geotextiles by the Wide-Width Strip Method
\-ASTM D 4632-\	(1991) Grab Breaking Load and Elongation of Geotextiles
\-ASTM D 4643-\	(1993) Determination of Water (Moisture) Content of Soil by the Microwave Oven Method
\-ASTM D 4833-\	(1988) Index Puncture Resistance of Geotextiles, Geomembranes, and Related Products
\-ASTM D 5321-\	(1992) Determining the Coefficient of Soil and Geosynthetic or Geosynthetic and Geosynthetic Friction by the Direct Shear Method
\-ASTM D 5887-\	(1995) Measurement of Index Flux Through Saturated Geosynthetic Clay Liner Specimens Using a Flexible Wall Permeameter
\-ASTM D 5888-\	(1995) Storage and Handling of Geosynthetic Clay Liners
\-ASTM D 5889-\	(1995) Quality Control of Geosynthetic Clay Liners
\-ASTM D 5890-\	(1995) Swell Index of Clay Mineral Component of GCL's
\-ASTM D 5891-\	(1995) Fluid Loss of Clay Component of GCL's
\-ASTM D 5993-\	(1996) Measuring Mass per Unit of Geosynthetic Clay Liners

\-ASTM D 6072-\ (1996) Installation of Geosynthetic Clay Liners

1.2. SUBMITTALS

Contracting Officer approval is required for submittals with a "GA" designation; submittals having an "FIO" designation are for information only. The following shall be submitted in accordance with specification section \=01300=\ SUBMITTAL PROCEDURES:

SD-01 Data\

GCL Properties\; *GA*\. (see paragraph 2.2, Table 1)

Manufacturer's certified raw and roll material data sheets. This submittal shall include certification the GCL has been continuously inspected for broken needles using an in-line metal detector, and all broken needles have been removed. Certification shall be attested to by a person having legal authority to bind the GCL manufacturing company. Test results shall be submitted at least 21 days prior to GCL delivery to the site.

SD-04 Drawings\

Layout and Detail Drawings\; *GA*\. (see paragraphs 3.3.3 and 3.5)

GCL panel layout and penetration detail drawings a minimum of 14 days prior to deployment.

SD-06 Instructions\

Tests, Inspections, and Verifications\; *GA*\. (see paragraph 3.1)

Manufacturer's Quality Control (QC) Manual which describes testing procedures, frequency of testing and acceptance/rejection criteria for quality control testing a minimum of 21 days prior to GCL delivery to the site.

SD-08 Statements\

Qualifications\; *GA*\. (see paragraph 1.3)

Qualification statements for Manufacturer, Installer, Quality Control Inspector, and Quality Control Laboratory, including resumes of key personnel involved in this project.

SD-09 Reports\

Tests, Inspections, and Verifications\; *GA*\. (see paragraph 3.1)

Required GCL Manufacturer's testing (see paragraph 3.1.2)

Interface Direct Shear Testing\; *GA*\. (see paragraph 3.1.1)

Certified Quality Control Laboratory test results for interface direct shear testing a minimum of 21 days prior to GCL delivery to the site

Site Verification Sampling and Testing\; *GA*\. (see paragraph 3.2)

Quality Control Laboratory test results for bentonite mass per unit area and peel strength, including description of equipment and test methods.

1.3. *QUALIFICATIONS*\

1.3.1. Manufacturer.

Geosynthetic clay liner shall be the product of a recognized GCL manufacturer who has produced the proposed GCL using the same bentonite, geotextiles, and sewing thread for at least 5 completed projects totaling a minimum of 2,000,000 square feet.

1.3.2. Quality Control (QC) Inspector.

The QC Inspector shall be a person furnished by the Contractor who shall have the sole responsibility of performing inspections for the purpose of monitoring and controlling the quality of GCL installation. The QC Inspector shall assist the Contracting Officer in obtaining samples for verification testing.

1.3.3. Quality Control (QC) Laboratory.

The Contractor shall obtain a QC laboratory independent from the manufacturer and Installer which is responsible for laboratory quality control testing.

1.4. DELIVERY, STORAGE, AND HANDLING

Storage and handling procedures shall be in accordance with \-ASTM D 5888-\. GCL shall be stored indoors until transported to the construction site.

GCL shall be shipped, stored, and handled ensuring that no damage occurs. In addition, the GCL shall be protected from water (moisture), dirt, or any other foreign materials. Rolls shall be packaged in an opaque, waterproof, protective covering and shall be wrapped around a central core which is structurally capable of supporting the weight of the roll without excessive bending under normal handling conditions. The central core shall remain accessible during storage for ease of handling.

Equipment used to move GCL shall have bars which extend through the central core. Rolls shall be labeled with the manufacturer's name, product identification, lot number, roll number, roll dimensions, roll weight, and date manufactured. Rolls of GCL shall be continuously supported during storage and shall be kept in their original, unopened, protective covering. No equipment or tools shall be used during handling, storage, trafficking or deployment which may damage the GCL.

Field storage shall be in flat dry areas where water (moisture) cannot accumulate or the rolls shall be elevated off the ground. GCL rolls shall be stacked no more than 2 rolls high. Storage, placement and stacking of rolls shall be performed to avoid thinning of the product at points of contact.

PART 2. PRODUCTS

2.1. FOUNDATION LAYER REQUIREMENTS

Foundation layer for the geosynthetic clay liner shall meet the requirements in specification section \=02211=\ EXCAVATION, INITIAL GRADING, AND RANDOM AND FOUNDATION FILL FOR LANDFILL COVER SYSTEMS.

2.2. *GCL PROPERTIES*\

GCL shall be a manufactured product consisting of a sodium montmorillonite clay (bentonite) layer evenly distributed between two geotextiles. The geotextile on the upper side of the GCL shall be nonwoven. The geotextile on the lower side of the GCL shall be woven or nonwoven. The GCL shall conform to the property requirements listed in Table 1, and shall be free of tears, holes, or other defects which may affect its serviceability. Encapsulating geotextiles shall be mechanically bonded using a needle punch or stitching process. If needle punching or stitch bonding is used in manufacturing the GCL, the GCL shall be continuously inspected for broken needles using an in-line metal detector. All broken needles shall be removed. The minimum manufactured GCL sheet width shall be 13.5 feet and the minimum manufactured GCL sheet length shall be 100 feet.

TABLE 1. MANUFACTURER'S CERTIFIED GCL PROPERTIES

PROPERTY	TEST METHOD	TEST VALUE
BENTONITE		
Swell Index Test, minimum	\-ASTM D 5890-\	24 mL
Fluid Loss, maximum	\-ASTM D 5891-\	18 mL
COMPOSITE		
Peel Strength, minimum (see Note 1)	\-ASTM D 4632-\	15 lbs
Bentonite Mass/Unit Area, MARV, (see Note 2)	\-ASTM D 5993-\	0.75 lbs/ft^2
Flux, maximum (see Note 3)	\-ASTM D 5887-\	5 x 10^{-9} cm/sec
Puncture Resistance, (minimum)	\-ASTM D 4833-\ 2065.1	30 lbs
Wide Width Tensile, Machine Direction, minimum	\-ASTM D 4595-\	10 lbs/in

NOTES:

1. Peel strength testing shall be performed in accordance with \-ASTM D 4632-\ modified in accordance with the Manufacturer's Quality Control Manual.

2. Bentonite mass/unit area is based on a GCL moisture content of 0 percent as determined by \-ASTM D 2216-\ or \-ASTM D 4643-\. Bentonite mass/unit area is exclusive of glues added to the bentonite. MARV designates minimum average roll value.

3. Minimum confining pressure of 5 psi.

PART 3. EXECUTION

3.1. *TESTS, INSPECTIONS, AND VERIFICATIONS*\

3.1.1. *Interface Direct Shear Testing*\

One set of laboratory interface direct shear tests shall be performed on both the textured geomembrane to geosynthetic clay liner and on the foundation layer to geosynthetic clay liner interfaces in accordance with \-ASTM D 5321-\. For the textured geomembrane to geosynthetic clay liner interface, the non-woven side of the geosynthetic clay liner shall be tested against the geomembrane. For the foundation layer to geosynthetic clay liner interface, the geotextile side of the selected material not tested against the textured geomembrane shall be tested against the foundation layer soil. Foundation soil utilized in direct shear testing shall be representative of materials used for construction of the cover system and shall be compacted to the requirements in specification section

\=02211=\ EXCAVATION, INITIAL GRADING, AND RANDOM AND FOUNDATION FILL FOR LANDFILL COVER SYSTEMS. Testing shall be performed on the same materials and at the same orientation as will be utilized in construction. Soil and geosynthetic materials used in tested shall be representative of materials that will be used in construction. The materials shall be hydrated with distilled water under a normal stress of 1.5 psi for 72 hours prior to consolidation. The samples shall then be consolidated under normal stresses of 1.5, 3.0, and 5.0 psi for 48 hours prior to shearing under normal stresses of 1.5, 3.0, and 5.0 psi. A shear displacement rate of 0.04 inches per minute shall be used. Minimum peak interface friction angles of 18 degrees is required for both series of tests. Certified QC laboratory results of direct shear testing shall be provided to the Contracting Officer for approval 21 days prior to delivery of material to the site.

3.1.2. GCL Sampling and Testing.

The GCL shall be sampled and tested by the manufacturer in accordance with the manufacturer's approved Quality Control Manual. The manufacturer's quality control procedures shall be in accordance with \-ASTM D 5889-\. Test results not meeting the requirements specified in Table 1 shall result in the rejection of applicable rolls. The manufacturer's Quality Control Manual shall describe procedures used to determine rejection of applicable rolls. As a minimum, rolls produced immediately prior to and immediately after the failed roll shall be tested for the same failed parameter. Testing shall continue until a minimum of two successive rolls on both sides of the original failing roll pass the failed parameter.

3.2. *SITE VERIFICATION SAMPLING AND TESTING*\

Samples shall be collected by the Contractor at approved locations upon delivery to the site at the request of the Contracting Officer at a minimum frequency of 1 sample per 100,000 square feet or 1 test per lot, whichever results in a greater testing frequency. Lots of GCL material consisting of less than 50,000 square feet shall not be accepted. Samples shall be identified by manufacturer's name, product identification, lot and roll number. The machine direction shall also be noted on the sample with a waterproof marker. All samples shall be tested at the QC Laboratory for bentonite mass per unit area according to \-ASTM D 5993-\, and peel strength according to \-ASTM D 4632-\ modified in accordance with the test method described in the Manufacturer's Quality Control Manual.

At the discretion of the Contracting Officer, flux (permeability) and wide-width tensile strength shall be tested at the QC Laboratory in accordance with \-ASTM D 5887-\ and \-ASTM D 4595-\, respectively. Flux testing shall be performed at a confining pressure consistent with Manufacturer's Quality Control testing requirements listed in Table 1.

Test results not meeting the requirements specified in Table 1 shall result in rejection of applicable rolls. Determination of applicable rolls shall be as described in paragraph 3.1, TESTS, INSPECTIONS AND VERIFICATIONS.

3.3. INSTALLATION

3.3.1. Foundation Layer Subgrade.

The GCL shall be placed on the prepared and accepted foundation layer subgrade that meets the requirements in specification section \=02211=\ EXCAVATION, INITIAL GRADING, AND RANDOM AND FOUNDATION FILL FOR LANDFILL COVER SYSTEMS and paragraph: SURFACE PREPARATION and as specified herein.

3.3.2. Surface Preparation.

Immediately prior to geosynthetic clay liner deployment, the foundation layer subgrade shall be smooth and free of ruts and erosion rills greater than 1 inch in depth, or protrusions greater than 1/2 inch in depth or height, or as recommended by the GCL manufacturer. Prior to GCL placement, the QC Inspector and Installer shall inspect the surface on which the GCL is to be placed and certify in writing that the surface is acceptable. This inspection and certification shall be performed each day GCL material is placed.

3.3.3. Placement.

Unless otherwise specified, placement of the GCL shall conform with requirements in \-ASTM D 6072-\. The Contractor shall provide a drawing showing GCL panel layout a minimum of 14 days prior to deployment of the GCL.

The QC Inspector shall be present during handling, placement and covering of the GCL. GCL shall be installed as soon as practical after completion and approval of the foundation layer. GCL shall not be deployed during precipitation, in the presence of excessive moisture (e.g., fog, dew, rain, snow, sleet, hail), in areas of ponded water, or in the presence of excessive winds as determined by the Contracting Officer and QC Inspector.

The GCL shall be cut using scissors, hooked blade, or other cutting tools that will not damage underlying geosynthetics, as approved by the QC Inspector and Contracting Officer.

Areas of the GCL which become hydrated prior to being covered by the overlying geomembrane shall be removed and replaced. Hydrated GCL is defined as material which has become soft as determined by squeezing the material with finger pressure or material which has exhibited swelling.

On side slopes, the GCL shall be anchored at the top and rolled down the slope to continually maintain tension in the GCL panel and prevent loss of bentonite.

No construction equipment shall operate directly on the GCL during installation without approval of the QC Inspector and Contracting Officer. On side slopes, the GCL shall be anchored at the top and rolled down the slope to minimize wrinkles. Dragging of GCL panels over the ground surface shall be minimized. Edges shall be pulled tight to maximize contact and to smooth out wrinkles or creases.

3.3.4. Seams.

On 1V to 4H side-slopes, the GCL shall be placed with seams oriented parallel to the line of maximum slope and shall be free of tension or stress upon completion of the installation. Panels shall be positioned with the overlap recommended by the manufacturer, but not less than 6 inches after shrinkage for panel sides or 24 inches after shrinkage for panel ends. Dirt or other foreign matter shall be removed from the overlap area immediately prior to seaming. If required by the manufacturer, granular bentonite of the same type as the bentonite used for the GCL shall be placed along the entire overlap width at a minimum rate of 0.25 lbs. per linear foot or as recommended by the manufacturer. Construction adhesive or other approved seaming methods recommended by the manufacturer shall be used for horizontal seams on slopes. Overlaps which occur on slopes shall be constructed with the up slope GCL shingled over the down slope GCL.

3.3.5. Protection.

Only GCL panels which can be anchored and covered in the same day shall be unpackaged and installed. If exposed GCL cannot be covered before the end of a working day, it shall be temporarily covered with plastic or other waterproof material and ballasted until construction can resume. Trimming of GCL and placement of granular bentonite shall be done to avoid contamination of drainage materials by bentonite particles.

3.4. REPAIRS

Holes or tears in the GCL shall be repaired by placing a patch of GCL extending a minimum of 12 inches beyond edges of the hole or tear. If required by the GCL manufacturer, granular bentonite of the same type as the bentonite within the GCL shall be placed along the entire overlap width at a minimum rate of 0.25 lbs. per linear foot, or as recommended by the manufacturer. Patches shall be secured with a construction adhesive or other approved methods as recommended by the manufacturer.

3.5. PENETRATIONS

Penetration details shall be submitted for approval and shall be as recommended by the GCL manufacturer. As a minimum, pipe penetrations shall incorporate a collar of GCL wrapped around the pipe and securely fastened. Dry bentonite or bentonite paste shall be placed around the penetration for additional protection.

3.6. COVERING

The GCL shall not be covered prior to inspection and approval by the QC Inspector, Installer, and Contracting Officer. Soil backfill shall be placed from the bottom of the slope upward on the lower, 1V to 4H cover slope. Cover soil may be placed from bottom to top of slope or top to bottom of slope over the upper, 4 percent cover slope. The method of cover soil placement shall prevent tensile stresses from being mobilized in the GCL. The method of placement shall prevent cover soil from separating GCL panels in overlap areas.

SECTION 02513

CONCRETE DECONTAMINATION PAD

INDEX

PART 1 GENERAL
1.1 REFERENCES
1.2 SUBMITTALS
1.3 NOT USED
1.4 ALTERNATE DESIGN

PART 2 PRODUCTS
2.1 CONCRETE
2.2 NOT USED
2.3 NOT USED
2.4 FRAME AND GRATINGS
2.5 DISCHARGE PIPE
2.6 COLLECTION SUMP MANHOLE
2.7 STORAGE TANK

PART 3 EXECUTION
3.1 DRAINAGE INLET
3.2 DISCHARGE PIPE
3.3 LEAKAGE TESTING
3.4 DISPOSAL OF SEDIMENTS
3.5 DISPOSAL OF DECONTAMINATION WATER
3.6 DECONTAMINATION PAD REMOVAL

SECTION 02513

CONCRETE DECONTAMINATION PAD

PART 1 GENERAL

1.1 REFERENCES

The publications listed below form a part of this specification to the extent referenced. The publications are referred to in the text by basic designation only.

AMERICAN ASSOCIATION OF STATE HIGHWAY AND TRANSPORTATION OFFICIALS (AASHTO)

\-AASHTO M 105-\	(1994) Gray Iron Castings

AMERICAN SOCIETY FOR TESTING AND MATERIALS (ASTM)

\-ASTM A 48-\	(1994a) Gray Iron Castings
\-ASTM A 536-\	(1984; R 1993) Ductile Iron Castings
\-ASTM A 746-\	(1995) Specification for Ductile Iron Gravity Sewer Pipe
\-ASTM C 231-\	(1997) Air Content of Freshly Mixed Concrete by the Pressure Method
\-ASTM D 1784-\	(1996) Rigid Poly(Vinyl Chloride) (PVC) Compounds and Chlorinated Poly(Vinyl Chloride) (CPVC) Compounds
\-ASTM D 2321-\	(1989; R 1995) Underground Installation of Flexible Thermoplastic Sewer Pipe
\-ASTM D 3034-\	(1996) Type PSM Poly (Vinyl Chloride) (PVC) Sewer Pipe and Fittings
\-ASTM D 3212-\	(1996) Joints for Drain and Sewer Plastic Pipes Using Flexible Elastomeric Seals
\-ASTM D 3350-\	(1996) Polyethylene Plastic Pipe and Fittings Materials
\-ASTM D 3753-\	(1981; R 1991) Glass-Fiber-Reinforced Polyester Manholes

AMERICAN WATER WORKS ASSOCIATION (AWWA)

\-AWWA C111-\ (1990) Rubber-Gasket Joints for Ductile-Iron Pressure Pipe and Fittings

1.2 SUBMITTALS

Approval is required for submittals with a "GA" designation; submittals having an "FIO" designation are for information only. The following shall be submitted in accordance with Section \=01300=\ SUBMITTAL PROCEDURES:

SD-04 Drawings\

Alternate Design\; *GA*\.

SD-09 Reports\

Mix Design and Test Results\; *GA*\.

SD-13 Certificates\

Cementitious Materials\; *FIO*\.

Admixtures\; *FIO*\.

Curing Materials\; *FIO*\.

Reinforcement\; *FIO*\.

1.3 NOT USED

1.4 *ALTERNATE DESIGN*

The decontamination pad design presented in the drawings may be revised by the Contractor as needed. The Contractor's alternate design shall be submitted for approval prior to construction.

PART 2 PRODUCTS

2.1 CONCRETE

Concrete for decontamination pad shall conform to Section \=02552=\ BITUMINOUS PAVEMENT, PORTLAND CEMENT CONCRETE AND AGGREGATE BASE COURSES. Unless otherwise specified, reinforced concrete shall conform to the requirements for 3000 psi concrete under Section \=03300A=\ CONCRETE FOR BUILDING CONSTRUCTION. The concrete mixture shall have air content by volume of concrete, based on measurements made immediately after discharge from the mixer, of 5 to 7 percent when maximum size of coarse aggregate exceeds 1-1/2 inches. Air content shall be determined in accordance with \-ASTM C 231-\. The concrete covering over steel reinforcing shall not be less than 1-1/2 inches thick for walls and

flooring. Concrete deposited directly against the ground shall have a thickness of at least 3 inches between steel and ground.

2.2 NOT USED

2.3 NOT USED

2.4 FRAME AND GRATINGS

Frame and gratings shall be cast gray iron, ASTM A 48 or AASHTO M 105, Class 35B or cast ductile iron, ASTM A 536, Grade 65-45-12. Weight, shape, size, and waterway openings for grates shall be as indicated on the plans. Frames, covers, and gratings shall have a minimum transverse proof-load strength of 25,000 pounds.

2.5 DISCHARGE PIPE

Pipe shall be one of the following materials unless otherwise specified or indicated. Joints shall be watertight and shall be one of the following types. Pipe and joint materials used shall be compatible with the type of contaminants anticipated in the decontamination water.

2.5.1 Ductile Iron Gravity Sewer Pipe

\-ASTM A 746-\, Class 50, 51, or 52. Push-on joints shall conform to \-AWWA C111-\.

2.5.2 Polyvinyl Chloride (PVC) Pipe

\-ASTM D 3034-\, Type PSM, maximum SDR 35, produced from PVC certified by the compounder as meeting the requirements of \-ASTM D 1784-\, minimum cell class 12454-B. Joints shall be solvent cement or elastormeric gasket type in accordance with \-ASTM D 3034-\ and shall meet the test requirements of \-ASTM D 3212-\.

2.6 COLLECTION SUMP MANHOLE

The collection sump shall be watertight and the materials used shall be compatible with the type of contaminants anticipated in the decontamination water.

2.6.1 High-Density Polyethylene Manholes

Manholes shall be produced from PE certified by the resin producer as meeting the requirments of \-ASTM D 3350-\, cell class 33443C, RSC 160.

2.6.2 Glass-Fiber-Reinforced Polyester Manholes

Glass-fiber-reinforced polyester manholes shall conform to \-ASTM D 3753-\.

2.7 STORAGE TANK

The type of storage tank used shall be the responsibility of the Contractor. The tank shall be watertight and the materials used shall be compatible with the type of contaminants anticipated in the decontamination water.

PART 3 EXECUTION

3.1 DRAINAGE INLET

3.1.1 Joints

Waterstops shall be installed along any construction joints within drainage inlet to provide a watertight structure.

3.1.2 Pipe Connection

A flexible, watertight type connector shall be used where the discharge pipe connects to the drainage inlet.

3.2 DISCHARGE PIPE

3.2.1 Bedding

The bedding surface for the pipe shall provide a firm foundation of uniform density throughout the entire length of the pipe. Bedding for PVC pipe shall meet the requirements of \-ASTM D 2321-\.

3.2.2 Placing Pipe

Each pipe shall be carefully examined before being laid, and defective or damaged pipe shall not be used. Pipelines shall be laid to the grades and alignment indicated. Under no circumstances shall pipe be laid in water, and no pipe shall be laid when trench conditions or weather are unsuitable for such work. Diversion of drainage or dewatering of trenches during construction shall be provided as necessary. All pipe in place shall be inspected before backfilling, and those pipes damaged during placement shall be removed and replaced. Laying shall proceed upgrade with spigot ends of bell-and-spigot pipe pointing in the direction of the flow.

3.3 LEAKAGE TESTING

Drainage inlet, discharge piping, and collection sump shall be tested for leakage by exfiltration tests. Prior to testing for leakage the pipe trench shall be backfilled up to at least the lower half of the pipe. If required, sufficient additional backfill shall be placed to prevent pipe movement during testing, leaving the joints uncovered to permit inspection. The drainage inlet and collection sump shall not be backfilled prior to testing. Visible leaks encountered shall be corrected regardless of leakage test results. An exfiltration test shall be made by filling the drainage inlet, discharge piping, and collection sump with water. The filled system shall be allowed to stand until the drainage inlet has reached its maximum absorption, but not less than 4 hours. After absorption, the head shall be reestablished. The water level

during a 2-hour test period shall remain constant. When leakage occurs, satisfactory correction shall be made and retesting accomplished. Testing, correcting, and retesting shall be made at no additional cost.

3.4 DISPOSAL OF SEDIMENTS

Sediments which settle out of decontamination water in the drainage inlet or collection sump shall be periodically removed and disposed of as specified in Section \=01500=\ DECONTAMINATION AND DISPOSAL.

3.5 DISPOSAL OF DECONTAMINATION WATER

Decontamination water shall be pumped from the collection sump periodically and disposed of as specified in Section \=01500=\ DECONTAMINATION AND DISPOSAL.

3.6 DECONTAMINATION PAD REMOVAL

Upon completion of all required decontamination activities, the concrete decontamination pad, discharge piping, and collection sump shall be removed and disposed of off the project site.

SECTION 02552

BITUMINOUS PAVEMENT, PORTLAND CEMENT CONCRETE AND AGGREGATE BASE COURSES

INDEX

Part 1	GENERAL
1.1	SUMMARY
1.2	REFERENCES
1.3	SUBMITTALS
Part 2	PRODUCTS
2.1	NOT APPLICABLE
Part 3	EXECUTION
3.1	DEFINITION
3.2	PAVEMENT REMOVAL
3.3	PAVEMENT REPLACEMENT
3.4	BITUMINOUS SURFACE COURSE (CENTRAL PLANT HOT MIX)
3.5	BITUMINOUS MATERIALS
3.6	NOT USED
3.7	AGGREGATE BASE COURSE
3.8	AGGREGATE SUBBASE COURSE
3.9	AGGREGATE SURFACING COURSE
3.10	PORTLAND CEMENT CONCRETE
3.11	SAMPLING AND TESTING

SECTION 02552

BITUMINOUS PAVEMENT, PORTLAND CEMENT CONCRETE AND AGGREGATE BASE COURSES

PART 1 GENERAL

1.1 REFERENCES.

The publications listed below forms a part of this specification to the extent referenced. The publications are referred to in text by the basic designation only.

INDIANA DEPARTMENT OF HIGHWAYS, (IDOH)

Standard Specifications, 1988 Edition and the 1992 Supplemental Specifications

AMERICAN SOCIETY FOR TESTING AND MATERIALS (ASTM)

\-ASTM C 31-\	(1996) Making and Curing Concrete Test Specimens in the Field
\-ASTM C 39-\	(1996) Compressive Strength of Cylindrical Concrete Specimens
\-ASTM C 150-\	(1995a) Portland Cement
\-ASTM C 172-\	(1990) Sampling Freshly Mixed Concrete
\-ASTM D 1557-\	(1991) Laboratory Compaction Characteristics of Soil Using Modified Effort (56,000 ft-lbf/ft^3 z(2,700 kN-m/m^3))

CORPS OF ENGINEERS (COE)

\-COE CRD-C 572-\	(1974) Corps of Engineers Specifications for Polyvinylchloride Waterstop

1.2 SUBMITTALS.

Approval is required for submittals with a "GA" designation; submittals having an "FIO" designation are for information only. The following shall be submitted in accordance with Section \=01300=\ SUBMITTAL PROCEDURES:

SD-09 Reports\

Portland Cement Concrete\; *GA*\
Include aggregate testing

Moisture-Density Relationships\; *GA*\

Bituminous Surface Course\; *GA*\
Include JMF physical results and aggregate testing

Aggregate Base Course\; *GA*\
Aggregate Subbase Course\; *GA*\
Aggregate Surfacing Course\; *GA*\

SD-13 Certificates\

Certified Refinery Analysis\; *GA*\
Certified Mill Certificate\; *GA*\

Joint Materials\; *GA*\
Joint Fillers and Joint Sealant

PART 2 PRODUCTS

2.1 (NOT APPLICABLE).

PART 3 EXECUTION

3.1 DEFINITION.

Degree of compaction required is expressed as a percentage of the maximum density obtained by the test procedures presented in \-ASTM D 1557-\, Method C. This will be abbreviated hereinafter as "percent of laboratory maximum density".

3.1.1 MODIFICATION TO THE IDOH.

Reference to "Engineer" in the IDOH shall mean the Contracting Officer or Representative. Sections "METHOD OF MEASUREMENT" AND "BASIS OF PAYMENT" shall apply.

3.2 PAVEMENT REMOVAL.

Where pavement is to be removed at the locations shown on the drawings, the pavement shall be sawed full depth with an approved concrete saw prior to removal so as to leave a straight and vertical edge. The pavement material and existing base course shall be removed in a manner that will not disturb the adjacent in-place material. Pavement material from the removal area shall be disposed of as refuse debris beneath the landfill cap in accordance with Section \=02211=\ EXCAVATION, INTITIAL GRADING, AND RANDOM FILL FOR LANDFILL COVER SYSTEMS .

3.3 PAVEMENT REPLACEMENT.

The replaced pavement materials shall be consist of bituminous surface course placed to the lines and grades of the existing pavement and as shown on the drawings. Replacement pavement materials shall conform to the requirements as described below.

3.4 BITUMINOUS SURFACE COURSE (CENTRAL PLANT HOT MIX).

Bituminous surface course\ shall conform to and be placed to the requirements of, Section 400 "BITUMINOUS PAVEMENTS", Section 401, "PLANT MIX PAVEMENT", and Section 403, "HOT ASPAHLT CONCRETE PAVEMENT" except as modified herein. The JMF shall meet the requirements of Section 430.04(b)3, "Mixture 9" or "Mixture 11". The maximum amount of material passing the No. 200 sieve shall be 7.0%. The air voids in the total mix of the laboratory JMF shall be targeted between 3% and 5%. The mix design shall use a compaction effort of 50 blows on each side of the specimen. Bituminous coarse aggregate shall be Class B. The minimum amount of crushed particles in the entire blend of aggregates used for the JMF shall be 70%.

3.5 BITUMINOUS MATERIALS.

Bituminous materials shall conform to and be placed to the requirements of SECTION 403.03, "BITUMINOUS MATERIAL". Approval of the bituminous material shall be based on a current *certified refinery analysis*\ submitted by the Contractor, showing that the material conforms to the requirements of the IDOH. Asphalt cement shall be penetration grade AP-1 (120-150) or viscosity grade AC-5. Bituminous tack coat shall be emulsified asphalt designation AE-T.

3.6 NOT USED

3.7 AGGREGATE BASE COURSE.

Aggregate base course\ shall conform to, and be placed in accordance with, the requirements specified in Section 303, "COMPACTED AGGREGATE BASE, SURFACE, OR SHOULDERS", and Section 903.02, "COARSE AGGREGATE" of the IDOH. The aggregate base course shall be Type O Mix, and aggregates meeting the Class A, and No. 53 requirements. The aggregate base course material shall be compacted to 100 percent of laboratory maximum density.

3.8 AGGREGATE SUBBASE COURSE.

Aggregate subbase course\ shall conform to, and be placed in accordance with, the requirements specified in Section 3041, "SUBBASE", and Section 903.04, "SUBBASE MATERIAL" of the IDOH. The aggregate shall be Class A or B, and shall have a maximum size of 1-1/2 inch. The subbase course material shall be compacted to 100 percent of laboratory maximum density.

3.9 AGGREGATE SURFACING COURSE.

Aggregate surfacing course\ shall conform to and be placed to the requirements specified in Section 303, "COMPACTED AGGREGATE BASE, SURFACE, OR SHOULDERS", and Section 903.02, "COARSE AGGREGATE" of the IDOH. The aggregate base course shall be Type O Mix, and aggregates meeting the Class A, and No. 73 requirements. The surfacing course material shall be compacted to 100 percent of laboratory maximum density.

3.10 PORTLAND CEMENT CONCRETE .

3.10.1 PORTLAND CEMENT CONCRETE DECONTAMINATION PAD.

Portland cement concrete\ shall conform to, and be placed in accordance with, Section 702, "STRUCTURAL CONCRETE" of the IDOH, except as modified herein. Materials for portland cement concrete shall meet the requirements in section 702.03 "Materials". Coarse aggregate shall be Class A, size No. 8. The Portland cement shall be Type I or II. In addition, the Portland cement shall meet the optional chemical requirements of \-ASTM C 150-\ for low alkali. Portland cement concrete shall be Class C with a minimum 28-day compressive strength of 4,000 psi. Cylinders shall be sampled, cast and tested in accordance to \-ASTM C 172-\, \-ASTM C 31-\, and \-ASTM C 39-\ respectively. Approval of the Portland cement will be based on a current *certified mill certificate*\. The final surface texture for horizontal surfaces shall recieve a burlap drag. *Joint materials*\ shall conform to Section 905, "JOINT MATERIALS". Expansion joints shall be sealed with sealant conforming to \-ASTM D 3569-\. The backer rod diameter shall be 25% larger then the joint opening. Concrete steel reinforcement and welded deformed steel wire fabric shall conform to Section 909, "METAL MATERIALS". Waterstops shall be PVC and conform to the requirements of \-COE CRD-C 572-\.

3.11 SAMPLING AND TESTING.

Sampling and testing shall be the responsibility of the Contractor and shall be performed at no additional cost and as specified herein. Sampling and Testing shall be performed by an approved testing laboratory at the expense of the Contractor and shall be in accordance with the IDOH. The Contractor shall submit for approval the portland cement concrete mix design studieS (including aggregate tests) , bituminous job mix formula plus aggregate and laboratory tests, aggregate base and subbase courses, aggregate surfacing course *moisture-density relationships*\, and joint filler and joint sealing test results showing that the requirements specified herein and in the IDOH are satisfied. Initial acceptance samples or materials placed not meeting the IDOH requirements or as described herein shall be removed and replaced at the Contractor's expense. Initial test results shall be submitted at least 20 working days prior commencing construction.

3.11.1 Testing Frequency.

3.11.1.1 In-Place Tests.

In place test as described below will be used in addition to but shall not consecutively repeat the IDOH requirements.

3.11.1.1.1 Unbounded Aggregate Courses.

One of each of the following tests shall be performed on samples taken from the placed and compacted base, subbase course and aggregate surfacing course. Samples shall be taken for each 1,000 square yards of each layer of material placed in each area.

Sieve Analysis
Moisture-density relationship
Liquid Limit and Plasticity Index (Surfacing Rock only)
Crushed Particles, unless the material is crushed

quarried rock or unless otherwise approved

3.11.1.1.2 Pavements.

One of each of the following tests shall be performed on samples taken from the location of placement. Samples shall be taken at least once per day of each material placed or as directed by the Contracting Officer.

PCC (Portland Cement Concrete) air content and slump
PCC cylinders (Cast two specimens for testing at 28 days)

PCC Pavement thickness determination
ACC (Asphaltic Cement Concrete) pavement mat density
Extraction (asphalt content) and gradation of the JMF
ACC thickness determination

SECTION 02720

STORM-DRAINAGE SYSTEM

06/91

INDEX

PART 1 GENERAL
- 1.1. REFERENCES
- 1.2. NOT USED
- 1.3. SUBMITTALS
- 1.4. DELIVERY, STORAGE, AND HANDLING

PART 2 PRODUCTS
- 2.1. PIPE FOR CULVERTS AND STORM DRAINS
- 2.2. JOINTS
- 2.3. DRAINAGE STRUCTURES
- 2.4. MISCELLANEOUS MATERIALS
- 2.5. NOT USED
- 2.6. NOT USED
- 2.7. \+HYDROSTATIC TEST ON WATERTIGHT JOINTS+\

PART 3 EXECUTION
- 3.1. EXCAVATION, TRENCHING, AND BACKFILLING FOR PIPE CULVERTS, STORM DRAINS, AND DRAINAGE STRUCTURES
- 3.2. BEDDING
- 3.3. PLACING PIPE

SECTION 02720

STORM-DRAINAGE SYSTEM
06/91

PART 1. GENERAL

1.1. REFERENCES

The publications listed below form a part of this specification to the extent referenced. The publications are referred to in the text by basic designation only.

AMERICAN ASSOCIATION OF STATE HIGHWAY AND TRANSPORTATION OFFICIALS (AASHTO)

\-AASHTO M 198-\	(1994) Joints for Circular Concrete Sewer and Culvert Pipe Using Flexible Watertight Gaskets

AMERICAN SOCIETY FOR TESTING AND MATERIALS (ASTM)

\-ASTM A 48-\	(1994a) Gray Iron Castings
\-ASTM A 536-\	(1984; R 1993) Ductile Iron Castings
\-ASTM C 76-\	(1997) Reinforced Concrete Culvert, Storm Drain, and Sewer Pipe
\-ASTM C 231-\	(1997) Air Content of Freshly Mixed Concrete by the Pressure Method
\-ASTM C 270-\	(1997) Mortar for Unit Masonry
\-ASTM C 443-\	(1994) Joints for Circular Concrete Sewer and Culvert Pipe, Using Rubber Gaskets
\-ASTM C 478-\	(1997) Precast Reinforced Concrete Manhole Sections
\-ASTM C 923-\	(1996) Resilient Connectors Between Reinforced Concrete Manhole Structures and Pipes

1.2. NOT USED

1.3. SUBMITTALS

Approval is required for submittals with a "GA" designation; submittals having an "FIO" designation are for information only. The following shall be submitted in accordance with Section \=01300=\ SUBMITTAL PROCEDURES:

SD-06 Instructions\

Placing Pipe\; *FIO*\.

Printed copies of the manufacturer's recommendations for installation procedures of the material being placed, prior to installation.

SD-13 Certificates\

Pipe For Culverts and Storm Drains\; *FIO*\.

Certification demonstrating conformance to applicable pipe specifications, before pipe is installed.

Hydrostatic Test on Watertight Joints\; *FIO*\.

Frame and Cover or Gratings\; *FIO*\.

Certified copies of test reports demonstrating conformance to applicable pipe specifications, before pipe is installed. Certification on the ability of frame and cover or gratings to carry the imposed live load.

Precast Manhole Concrete Flat Tops\; *FIO*\.

Certification on the ability of precast manhole flat tops to carry the imposed live load.

1.4. DELIVERY, STORAGE, AND HANDLING

1.4.1. Delivery and Storage

Materials delivered to site shall be inspected for damage, unloaded, and stored with a minimum of handling. Materials shall not be stored directly on the ground. The inside of pipes and fittings shall be kept free of dirt and debris. Gasket materials and plastic materials shall be protected from exposure to the direct sunlight over extended periods.

1.4.2. Handling

Materials shall be handled in such a manner as to ensure delivery to the trench in sound, undamaged condition. Pipe shall be carried to the trench, not dragged.

PART 2. PRODUCTS

2.1. *PIPE FOR CULVERTS AND STORM DRAINS*\

Pipe for culverts and storm drains shall be non-perforated and of the sizes indicated and shall conform to the requirements specified.

2.1.1. Concrete Pipe

\-ASTM C 76-\, Class as indicated.

2.2. JOINTS

Pipe joints shall be one of the following types and shall meet the test requirements of paragraph HYDROSTATIC TEST ON WATERTIGHT JOINTS.

2.2.1. Concrete Pipe

2.2.1.1. Flexible Gasket Joints

a. Materials: Flexible watertight joints shall be made with plastic or rubber-type gaskets. The design of joints and the physical requirements for plastic gaskets shall conform to \-AASHTO M 198-\, and rubber-type gaskets shall conform to \-ASTM C 443-\. Gaskets shall have not more than one factory-fabricated splice.

b. Test Requirements: Joints shall be watertight and shall meet the test requirements of paragraph HYDROSTATIC TEST ON WATERTIGHT JOINTS. Certified copies of test results shall be delivered to the Contracting Officer before gaskets or jointing materials are installed. Alternate types of watertight joint may be furnished if specifically approved.

c. Installation: Gaskets and jointing materials shall be as recommended by the particular manufacturer in regard to use of lubricants, cements, adhesives, and other special installation requirements. Surfaces to receive lubricants, cements, or adhesives shall be clean and dry. Gaskets and jointing materials shall be affixed to the pipe not more than 24 hours prior to the installation of the pipe, and shall be protected from the sun, blowing dust, and other deleterious agents at all times. Gaskets and jointing materials shall be inspected before installing the pipe; any loose or improperly affixed gaskets and jointing materials shall be removed and replaced. The pipe shall be aligned with the previously installed pipe, and the joint pushed home. If, while the joint is being made the gasket becomes visibly dislocated the pipe shall be removed and the joint remade.

2.3. DRAINAGE STRUCTURES

2.3.1. Manholes

Construction shall be of precast reinforced concrete manhole sections, complete with frames and covers and with fixed galvanized steel ladders where indicated. Manhole bases shall be cast-in-place or precast reinforced concrete. Precast reinforced concrete manhole bases, risers, and tops shall conform to \-ASTM C 478-\. *Precast manhole concrete flat tops*\ shall be certified for AASHTO H-20 wheel loads. Joints between precast concrete risers and tops shall be full-bedded in cement mortar and shall be smoothed to a uniform surface on both interior and exterior of the structure or shall be made with flexible watertight, rubber-type gaskets meeting the requirements of paragraph FLEXIBLE GASKET JOINTS.

2.3.2. Connectors

AllRCP pipe connections to manholes shall be made with flexible, watertight connectors conforming to \-ASTM C 923-\.

2.3.3. Flared End Sections

Sections shall be of the standard design of the pipe manufacturer.

2.4. MISCELLANEOUS MATERIALS

2.4.1. Concrete

Unless otherwise specified, concrete and reinforced concrete shall conform to the requirements for 3000 psi concrete under Section \=03300A=\ CONCRETE FOR BUILDING CONSTRUCTION. The concrete mixture shall have air content by volume of concrete, based on measurements made immediately after discharge from the mixer, of 5 to 7 percent when maximum size of coarse aggregate exceeds 1-1/2 inches. Air content shall be determined in accordance with \-ASTM C 231-\. The concrete covering over steel reinforcing shall not be less than 1-1/2 inches thick for walls and flooring. Concrete covering deposited directly against the ground shall have a thickness of at least 3 inches between steel and ground.

2.4.2. Mortar

Mortar for connections to drainage structures shall conform to \-ASTM C 270-\, Type M, except the maximum placement time shall be 1 hour. The quantity of water in the mixture shall be sufficient to produce a stiff workable mortar but in no case shall exceed 5 gallons of water per sack of cement. Water shall be clean and free of harmful acids, alkalies, and organic impurities. The mortar shall be used within 30 minutes after the ingredients are mixed with water. The inside of the joint shall be wiped clean and finished smooth. The mortar head on the outside shall be protected from air and sun with a proper covering until satisfactorily cured.

2.4.3. *Frame and Cover or Gratings*\

Frame and cover or gratings shall be cast gray iron, \-ASTM A 48-\, Class 35B or cast ductile iron, \-ASTM A 536-\, Grade 65-45-12. Weight, shape, size, and waterway openings for grates and curb inlets shall be as indicated on the plans. Covers and gratings shall have a minimum transverse proof-load strength of 25,000 pounds.

2.5. NOT USED

2.6. NOT USED

2.7. \+*HYDROSTATIC TEST ON WATERTIGHT JOINTS*\+\

2.7.1. Concrete Pipe

A hydrostatic test shall be made on the watertight joint types as proposed. Only one sample joint of each type needs testing; however, if the sample joint fails because of faulty design or workmanship, an additional sample joint may be tested. During the test period, gaskets or other jointing material shall be protected from extreme temperatures which might adversely affect the performance of such materials. Performance requirements for joints in reinforced concrete pipe shall conform to \-AASHTO M 198-\ or \-ASTM C 443-\.

PART 3. EXECUTION

3.1. EXCAVATION, TRENCHING, AND BACKFILLING FOR PIPE CULVERTS, STORM DRAINS, AND DRAINAGE STRUCTURES

Excavation of trenches and for appurtenances and backfilling for culverts and storm drains shall be in accordance with the applicable portions of Section \=02222=\ EXCAVATION, TRENCHING, AND BACKFILLING FOR UTILITIES SYSTEMS.

3.2. BEDDING

The bedding surface for the pipe shall provide a firm foundation of uniform density throughout the entire length of the pipe. Bedding shall conform to the details on the drawings and shall be in accordance with the applicable portions of Section \=02222=\ EXCAVATION, TRENCHING, AND BACKFILLING FOR UTILITIES SYSTEMS. The following types of bedding shall be used:

3.2.1. Concrete Pipe

Concrete pipe shall be bedded with a Class C type bedding as shown on the drawings.

3.3. *PLACING PIPE*\

Each pipe shall be carefully examined before being laid, and defective or damaged pipe shall not be used. Pipelines shall be laid to the grades and alignment indicated. Proper facilities shall be provided for lowering sections of pipe into trenches. Under no circumstances shall pipe be laid in water, and no pipe shall be laid when trench conditions or weather are unsuitable for such work. Diversion of drainage or dewatering of trenches during construction shall be provided as necessary. All water generated during dewatering activities shall be disposed of in accordance with paragraph: Protection of Water Resources in Section \=01430=\ ENVIRONMENT PROTECTION. All pipe in place shall be inspected before backfilling, and those pipes damaged during placement shall be removed and replaced.

3.3.1. Concrete Pipe

Laying shall proceed upgrade with spigot ends of bell-and-spigot pipe and tongue ends of tongue-and-groove pipe pointing in the direction of the flow.

3.3.2. Elliptical Reinforced Concrete Pipe

Placement shall be so that the manufacturer's reference lines designating the top of the pipe will be within 5 degrees of a vertical plane through the longitudinal axis of the pipe. In all backfilling operations, care shall be taken to prevent damage to or misalignment of the pipe.

SECTION 02730
SUBDRAINAGE SYSTEM FOR LANDFILL COVER SYSTEMS

INDEX

1. APPLICABLE PUBLICATIONS
2. DELIVERY, STORAGE, AND HANDLING OF MATERIALS
3. NOT USED
4. NOT USED
5. PIPE FOR SUBDRAINS
6. NOT USED
7. OBSERVATION RISERS
8. GRANULAR SUBRAIN MATERIAL
9. INSTALLATION OF PIPE FOR SUBDRAINS
10. INSTALLATION OF GRANULAR MATERIAL AND BACKFILLING FOR SUBDRAINS
11. SUBMITTALS

1. **APPLICABLE PUBLICATIONS.** The publications listed below form a part of this specification to the extent referenced. The publications are referred to in the text by the basic designation only.

1.1. **AMERICAN ASSOCIATION OF STATE HIGHWAY AND TRANSPORTATION OFFICIALS (AASHTO) STANDARDS.**

AASHTO M 43	Sizes of Aggregate for Highway and Bridge Construction
AASHTO M 278	Class PS 50 Polyvinyl Chloride (PVC) Pipe
\-AASHTO M 294-\	(1993) Corrugated Polyethylene Pipe, 12- to 36-in. Diameter

1.2. **AMERICAN SOCIETY FOR TESTING AND MATERIALS (ASTM) PUBLICATIONS.**

\-ASTM D 3034-\	(1994) Type PSM Poly(Vinyl Chloride) (PVC) Sewer Pipe and Fittings
\-ASTM D 3212-\	(1992) Joints for Drain and Sewer Plastic Pipes Using Flexible Elastomeric Seals
\-ASTM F 405-\	(1993) Corrugated Polyethylene (PE) Tubing and Fittings
\-ASTM F 667-\	(1985) Large Diameter Corrugated Polyethylene Tubing and Fittings
\-ASTM F 949-\	(1993a) Poly(Vinyl Chloride) (PVC) Corrugated Sewer Pipe with a Smooth Interior and Fittings

2. **DELIVERY, STORAGE, AND HANDLING OF MATERIALS.**

2.1. **DELIVERY AND STORAGE.** Materials delivered to site shall be inspected for damage, unloaded, and stored with the minimum of handling. Materials shall not be stored directly on the ground. Inside of pipes and fittings shall be kept free of dirt and debris. During shipment and storage, filter fabric shall be wrapped in burlap or similar heavy duty protective covering. The storage area shall be such that the fabric is protected from mud, soil, dust, and debris. Filter fabric materials that are not to be installed immediately shall not be stored in the direct sunlight. Plastic pipe shall be protected from exposure to direct sunlight over extended periods.

2.2. **HANDLING.** Materials shall be handled in such a manner as to insure delivery to the trench in sound undamaged condition. Pipe shall be carried and not dragged to the trench.

3. ***NOT USED***
4. **NOT USED.**

5. **PIPE FOR SUBDRAINS** shall be as indicated and shall conform to the requirements for the pertinent type or types in the following lists:

5.1. ***PLASTIC PIPE*\.** Plastic pipe shall contain ultraviolet inhibitor to provide protection from exposure to direct sunlight.

5.1.1. NOT USED

5.1.2. **Polyvinyl Chloride (PVC) Pipe and Fittings.** Polyvinyl Chloride (PVC) pipe and fittings shall conform to either ASTM D 3034, F 949, or AASHTO M 278 with a minimum pipe stiffness of 50.

5.1.3. **Corrugated Polyethylene (PE) Pipe and Fittings.** Use either ASTM F 405 for pipes 3 to 6 inches in diameter, inclusive, ASTM F 667 for pipe 8 to 24 inches in diameter or AASHTO M 294 for pipes 12 to 24 inches in diameter with a minimum pipe stiffness of 50. Fittings shall be manufacturer's standard type and shall conform to the indicated specification. Corrugated pipe shall have a smooth interior.

5.1.4. **Pipe Perforations.** Water inlet area shall be a minimum of 1.0 square inch per linear foot. Manufacturer's standard perforated pipe which essentially meets these requirements may be substituted with prior approval of the Contracting Officer.

5.1.4.1. **Circular Perforations in Plastic Pipe.** Circular holes shall be cleanly cut not more than 3/8 inch or less than 3/16 inch in diameter and arranged in rows parallel to the longitudinal axis of the pipe. The rows shall be approximately 1-1/2 inches apart and arranged in a staggered pattern so that all perforations lie at the midpoint between perforations in adjacent rows. The rows shall be spaced over not more than 155 degrees of circumference. The spigot or tongue end of the pipe shall not be perforated for a length equal to the depth of the socket, and perforations shall continue at uniform spacing over the entire length of the pipe.

5.1.4.2. **Slotted Perforations in Plastic Pipe.** Circumferential slots shall be cleanly cut so as not to restrict the inflow of water and uniformly spaced along the length and circumference of the tubing. Width of slots shall not exceed 1/8 inch nor be less than 1/32 inch. The length of individual slots shall not exceed 1-1/4 inches on 3-inch diameter tubing, 10 percent of the tubing inside nominal circumference on 4- to 8-inch diameter tubing, and 2-1/2 inches on 10-inch diameter tubing. Rows of slots shall be symmetrically spaced so that they are fully contained in 2 quadrants of the pipe. Slots shall be centered in the valleys of the corrugations of profile wall pipe.

6. NOT USED

7. **CLEAN-OUTS and LATERALS.** In-line drains with solid covers shall be installed to serve as clean-outs as shown on the drawings. Clean-outs and laterals shall be constructed of non-perforated pipe of the same material as that used for the subdrain pipe.

8. **GRANULAR SUBRAIN MATERIAL.** Granular subdrain material shall be constructed of crushed stone or gravel meeting any one of AASHTO Designation M43 size number 3, 357, 4, 467, 5, 56, 57, and 6.. All granular subdrain material shall meet AASHTO Designation 283 Class C Aggregate. The Contractor shall submit test reports and certification showing that the material meets the gradation and quality specified. Table 1 contains the standard gradations of material that can be utilized.

TABLE 1

Amount Finer than Each Laboratory Sieve (Square Openings). Weight Percentage

SIZE	2-1/2in	2in	1-1/2in	1-in	3/4in	1/2in	3/8in	No. 4	No.8	No.16
3	100	90-100	35-70	0-15	-	0-5	-	-	-	-
357	100	95-100	-	35-70	-	10-30	-	0-5	-	-
4	-	100	90-100	20-55	0-15	-	0-5	-	-	-
467	-	100	95-100	-	35-70	-	10-30	0-5	-	-
5	-	-	100	90-100	20-55	0-10	0-5	-	-	-
56	-	-	100	90-100	40-85	10-40	0-15	0-5	-	-
57	-	-	100	95-100	-	25-60	-	0-10	0-5	-
6	-	-	-	100	90-100	20-55	0-15	0-5	-	-

9. **INSTALLATION OF PIPE FOR SUBDRAINS.**

9.1. **NOT USED.**

9.2. **PIPELAYING.** Each pipe shall be carefully inspected before it is laid. Any defective or damaged pipe shall be rejected. The laying of pipe shall proceed upgrade beginning at the lower end of the pipeline. Under no circumstances shall pipe be laid in water, and no pipe shall be laid when the trench conditions or weather is unsuitable for such work. Full responsibility for the diversion of drainage and dewatering of trenches during construction shall be borne by the Contractor. Pipe shall be laid to the grades and

alinement as indicated. The pipe shall be bedded to the established gradeline. Perforated pipe shall be placed with the perforations down unless otherwise indicated. Pipe of either the bell-and-spigot type or the tongue-and-groove type shall be laid with the bell or groove end upstream. All pipe in place shall be approved before backfilling.

9.3. **JOINTING.**

9.3.1. NOT USED

9.3.2. **Poly(Vinyl Chloride) (PVC) Pipe.** Joints shall be in accordance with the requirements of ASTM D 3212.

9.3.3. **Corrugated Polyethylene (PE) Tubing and Fittings.** Joints shall be in accordance with the requirements of ASTM F 405.

10. **INSTALLATION OF GRANULAR MATERIAL AND BACKFILLING FOR SUBDRAINS.** After pipe for subdrains has been laid, inspected, and approved, granular subdrain material shall be placed around and over the pipe to the depth indicated. Material shall be placed to insure all void areas and haunches of the pipe are filled.

11. **SUBMITTALS.**

Contracting Officer approval is required for submittals with a "GA" designation; submittals having an "FIO" designation are for information only. The following shall be submitted in accordance with Section \=01300=\ SUBMITTAL PROCEDURES:

SD-09 Reports\

Plastic Pipe\; *FIO*\.

Granular Subdrain Material\; *FIO*\.

SECTION 02831

CHAIN LINK FENCE

07/92

INDEX

PART 1 GENERAL
1.1. REFERENCES
1.2. SUBMITTALS

PART 2 PRODUCTS
2.1. MATERIALS

PART 3 EXECUTION
3.1. GENERAL
3.2. EXCAVATION
3.3. POSTS
3.4. RAILS
3.5. BRACES AND TRUSS RODS
3.6. TENSION WIRES
3.7. CHAIN LINK FABRIC
3.8. BARBED WIRE SUPPORTING ARMS AND BARBED WIRE
3.9. GATES
3.10. NOT USED
3.11. GROUNDING
3.12. NOT USED
3.13. REMOVAL AND SALVAGE OF EXISTING CHAIN LINK SECURITY FENCE

SECTION 02831

CHAIN LINK FENCE

07/92

PART 1. GENERAL

1.1. REFERENCES

The publications listed below form a part of this specification to the extent referenced. The publications are referred to in the text by basic designation only.

AMERICAN SOCIETY FOR TESTING AND MATERIALS (ASTM)

\-ASTM A 121-\	(1992a) Zinc-Coated (Galvanized) Steel Barbed Wire
\-ASTM A 153-\	(1996) Zinc-Coated (Hot Dip) on Iron and Steel Hardware
\-ASTM A 392-\	(1996) Zinc-Coated Steel Chain-Link Fence Fabric
\-ASTM A 491-\	(1996) Aluminum-Coated Steel Chain-Link Fence Fabric
\-ASTM A 585-\	(1992) Aluminum-Coated Steel Barbed Wire
\-ASTM A 780-\	(1993a) Repair of Damaged and Uncoated Areas of Hot-Dipped Galvanized Coatings
\-ASTM A 824-\	(1992) Metallic-Coated Steel Marcelled Tension Wire for Use With Chain Link Fence
\-ASTM C 94-\	(1996) Ready-Mixed Concrete
\-ASTM F 626-\	(1996) Fence Fittings
\-ASTM F 883-\	(1990) Padlocks
\-ASTM F 900-\	(1994) Industrial and Commercial Swing Gates
\-ASTM F 1043-\	(1995) Strength and Protective Coatings on Metal Industrial Chain-Link Fence Framework
\-ASTM F 1083-\	(1996) Specification for Pipe, Steel, Hot-Dipped Zinc-Coated (Galvanized) Welded, for Fence Structures

\-ASTM F 1184-\ (1994) Industrial and Commercial Horizontal Slide Gates

1.2. SUBMITTALS

Contracting Officer approval is required for submittals with a "GA" designation; submittals having an "FIO" designation are for information only. The following shall be submitted in accordance with Section \=01300=\ SUBMITTAL PROCEDURES:

SD-13 Certificates\

Chain Link Fence\; *FIO*\.

Statement signed by an official authorized to certify on behalf of the manufacturer attesting that the chain link fence and component materials meet the specified requirements.

PART 2. PRODUCTS

2.1. MATERIALS

Materials shall conform to the following:

2.1.1. Chain Link Fence Fabric

\-ASTM A 392-\, Class 2, zinc-coated steel wire with minimum coating weight of 2.0 ounces of zinc per square foot of coated surface, or \-ASTM A 491-\, Type I, aluminum-coated steel wire. Fabric shall be fabricated of 9 gauge wire woven in 2 inch mesh. Fabric height shall be 7 feet. Fabric shall be twisted and barbed on the top selvage and knuckled on the bottom selvage.

2.1.2. Gates

\-ASTM F 900-\. Gate shall be the type and swing shown. Gate frames shall conform to strength and coating requirements of \-ASTM F 1083-\ for Group IA, steel pipe, with external coating Type A, nominal pipe size (NPS) 1-1/2. Gate frames shall conform to strength and coating requirements of \-ASTM F 1043-\, for Group IC, steel pipe with external coating Type A or Type B, nominal pipe size (NPS) 1-1/2. Gate fabric shall be as specified for chain-link fabric. Each end member of gate frames shall be extended sufficiently above the top member to carry three strands of barbed wire in horizontal alignment with barbed wire strands on the fence. Gate leaves more than 8 feet wide shall have either intermediate members and diagonal truss rods or shall have tubular members as necessary to provide rigid construction, free from sag or twist. Gate leaves less than 8 feet wide shall have truss rods or intermediate braces. Gate fabric shall be attached to the gate frame by method standard with the manufacturer except that welding will not be permitted. Latches, hinges, stops, keepers, and other hardware items shall be furnished as required for the operation of the gate. Latches shall be arranged for padlocking so that the padlock will be accessible from both sides of the gate. Stops shall be provided for holding the gates in the open position.

2.1.3. Posts

\-ASTM F 1083-\, zinc-coated. Group IA, with external coating Type A steel pipe. Group IC steel pipe, zinc-coated with external coating Type A or Type B and Group II, formed steel sections, shall meet the strength and coating requirements of \-ASTM F 1043-\. Group III, \-ASTM F 1043-\ steel H-section may be used for line posts in lieu of line post shapes specified for the other classes. Sizes shall be as shown on the drawings. Line posts and terminal (corner, gate, and pull) posts selected shall be of the same designation throughout the fence. Gate post shall be for the gate type specified subject to the limitation specified in \-ASTM F 900-\ and/or \-ASTM F 1184-\.

2.1.3.1. NOT USED

2.1.4. Braces and Rails

\-ASTM F 1083-\, zinc-coated, Group IA, steel pipe, size NPS 1-1/4. Group IC steel pipe, zinc-coated, shall meet the strength and coating requirements of \-ASTM F 1043-\. Group II, formed steel sections, size 1.66 inch, conforming to \-ASTM F 1043-\, may be used as braces and rails if Group II line posts are furnished.

2.1.5. Tension Wire

Tension wire shall be Type I or Type II, Class 2 coating, in accordance with \-ASTM A 824-\.

2.1.6. Accessories

\-ASTM F 626-\. Ferrous accessories shall be zinc or aluminum coated. Truss rods shall be furnished for each terminal post. Truss rods shall be provided with turnbuckles or other equivalent provisions for adjustment. Barbed wire shall be 2 strand, 12-1/2 gauge wire, zinc-coated, Class 3 in accordance with \-ASTM A 121-\ or aluminum coated Type I in accordance with \-ASTM A 585-\. Barbed wire shall be four-point barbed type steel wire. Barbed wire support arms shall be the single arm type and of the design required for the post furnished. Tie wire for attaching fabric to rails, braces, and posts shall be 9 gauge steel wire and match the coating of the fence fabric. Miscellaneous hardware coatings shall conform to \-ASTM A 153-\ unless modified herein.

2.1.7. NOT USED

2.1.8. Concrete

\-ASTM C 94-\, using 3/4 inch maximum size aggregate, and having minimum compressive strength of 3000 psi at 28 days. Grout shall consist of one part portland cement to three parts clean, well-graded sand and the minimum amount of water to produce a workable mix.

2.1.9. Padlocks

\-ASTM F 883-\, Type PO1, Grade 2, Size 1-3/4 inch. Padlocks shall be keyed alike and each lock shall be furnished with two keys.

PART 3. EXECUTION

3.1. GENERAL

Fence shall be installed to the lines and grades indicated. The area on either side of the fence line shall be cleared to the extent indicated. Line posts shall be spaced equidistant at intervals not exceeding 10 feet. Terminal (corner, gate, and pull) posts shall be set at abrupt changes in vertical and horizontal alignment. Fabric shall be continuous between terminal posts; however, runs between terminal posts shall not exceed 500 feet. Any damage to galvanized surfaces, including welding, shall be repaired with paint containing zinc dust in accordance with \-ASTM A 780-\.

3.2. EXCAVATION

Post holes shall be cleared of loose material. Waste material shall be spread where directed. The ground surface irregularities along the fence line shall be eliminated to the extent necessary to maintain a 2 inch clearance between the bottom of the fabric and finish grade.

3.3. POSTS

Posts shall be set plumb and in alignment. Posts shall be set in concrete to the depth indicated on the drawings. Posts set in concrete shall be set in holes not less than the diameter shown on the drawings. Concrete shall be thoroughly consolidated around each post, shall be free of voids and finished to form a dome. Concrete shall be allowed to cure for 72 hours prior to attachment of any item to the posts.

3.4. RAILS

3.4.1. Top Rail

Top rail shall be supported at each post to form a continuous brace between terminal posts. Where required, sections of top rail shall be joined using sleeves or couplings that will allow expansion or contraction of the rail. Bottom rail, if required for high security fence, shall be installed as indicated on the drawings.

3.4.2. NOT USED

3.5. BRACES AND TRUSS RODS

Braces and truss rods shall be installed as indicated and in conformance with the standard practice for the fence furnished. Horizontal (compression) braces and diagonal truss (tension) rods shall be installed on fences over 6 feet in height.

Braces and truss rods shall extend from terminal posts to line posts. Diagonal braces shall form an angle of approximately 40 to 50 degrees with the horizontal. No bracing is required on fences 6 feet high or less if a top rail is installed.

3.6. TENSION WIRES

Tension wire shall be installed along the bottom of the fence line and attached to the terminal posts of each stretch of the fence. Bottom tension wire shall be installed within the bottom 6 inches of the installed fabric. Tension wire shall be pulled taut and shall be free of sag.

3.7. CHAIN LINK FABRIC

Chain link fabric shall be installed on the side of the post indicated. Fabric shall be attached to terminal posts with stretcher bars and tension bands. Bands shall be spaced at approximately 15 inch intervals. The fabric shall be installed and pulled taut to provide a smooth and uniform appearance free from sag, without permanently distorting the fabric diamond or reducing the fabric height. Fabric shall be fastened to line posts at approximately 15 inch intervals and fastened to all rails and tension wires at approximately 24 inch intervals. Fabric shall be cut by untwisting and removing pickets. Splicing shall be accomplished by weaving a single picket into the ends of the rolls to be joined. The bottom of the installed fabric shall be 2 inches (plus or minus 1/2 inch) above the ground.

3.8. BARBED WIRE SUPPORTING ARMS AND BARBED WIRE

Barbed wire supporting arms and barbed wire shall be installed as indicated and as recommended by the manufacturer. Supporting arms shall be anchored to the posts in a manner to prevent easy removal with hand tools. Barbed wire shall be pulled taut and attached to the arms with clips or other means that will prevent easy removal.

3.9. GATES

Gates shall be installed at the locations shown. Hinged gates shall be mounted to swing as indicated. Latches, stops, and keepers shall be installed as required. Padlocks shall be attached to gates or gate posts with chains. Hinge pins, and hardware shall be welded or otherwise secured to prevent removal.

3.10. NOT USED

3.11. GROUNDING

Fences shall be grounded on each side of all gates, at each corner, at the closest approach to each building located within 50 feet of the fence, and where the fence alignment changes more than 15 degrees. Grounding locations shall not exceed 650 feet. Each gate panel shall be bonded with a flexible bond strap to its gate post. Fences crossed by powerlines of 600 volts or more shall be grounded at or near the point of crossing and at distances not exceeding 150 feet on each side of crossing. Ground conductor shall consist of No. 8 AWG solid

copper wire. Grounding electrodes shall be 3/4 inch by 10 foot long copper-clad steel rod. Electrodes shall be driven into the earth so that the top of the electrode is at least 6 inches below the grade. Where driving is impracticable, electrodes shall be buried a minimum of 12 inches deep and radially from the fence. The top of the electrode shall be not less than 2 feet or more than 8 feet from the fence. Ground conductor shall be clamped to the fence and electrodes with bronze grounding clamps to create electrical continuity between fence posts, fence fabric, and ground rods. After installation the total resistance of fence to ground shall not be greater than 25 ohms.

3.12. NOT USED

3.13. REMOVAL AND SALVAGE OF EXISTING CHAIN LINK SECURITY FENCE

The designated existing chain link security fence shall be removed in a workmanlike manner so as to preclude unnecessary damage to the fence materials. Chain link fencing to be removed shall be disposed of by the Contractor off the project site. All posts shall be excavated and disposed of by the Contractor. The post excavation shall be filled with suitable material in 6-inch layers and compacted to at least the density of the adjacent ground.

SECTION 02910
MONITORING WELL INSTALLATION

INDEX

1. SCOPE
2. APPLICABLE PUBLICATIONS
3. GENERAL REQUIREMENTS
4. DOCUMENTATION REQUIREMENTS
5. SUBMITTALS
6. MATERIALS
7. INSTALLATION
8. WELL ACCEPTANCE

ATTACHMENT: HTW Drilling Logs and Monitoring Well Installation Sheet

1. **SCOPE**. This specification covers the requirements for the installation of four new monitoring wells.

2. **APPLICABLE PUBLICATIONS**. The publications listed below form a part of this specification to the extent referenced. The publications are referred to in the text by basic designations only.

2.1. **AMERICAN SOCIETY FOR TESTING AND MATERIALS (ASTM) PUBLICATIONS**.

C 136-84a	"Standard Method for Sieve Analysis of Fine and Coarse Aggregate"
C 150-95	"Standard Specification for Portland Cement"
D 1586-84	"Standard Method for Penetration Test and Split-Barrel Sampling of Soils"
D 1785-86	"Specification for Polyvinyl Chloride (PVC) & Plastic Pipe, Schedules 40, 80, and 120"
D 1889-88a	"Standard Test Methods for Turbidity of Water"
D 2487-93	"Standard Test Method for Classification of Soils for Engineering Purposes"
D 2488-93	"Standard Practice for Description and Identification of Soils (Visual-Manual Procedure)"

2.2. **U.S. ENVIRONMENTAL PROTECTION AGENCY PUBLICATIONS**.

EPA 530/SW-611	"Procedures Manual for Ground-Water Monitoring at Solid Waste Disposal Facilities"
EPA 540/G-91-009	"Management of Investigation Derived Wastes During Site Inspection"
EPA 570/9-75-001	"Manual of Water Well Construction Practices"

2.3. **STATE OF INDIANA, DEPARTMENT OF NATURAL RESOURCES**

DIVISION OF WATER: Indiana Register, Vol. 15, No. 2, Title 310 "Final Rules Concerning the Regulation of Water Well Drilling."

Indiana Code 25-29-1.5, "Water Well Drilling Contractors."

3. GENERAL REQUIREMENTS.

3.1. DESCRIPTION. The Contractor shall furnish all labor equipment, and materials to install two pairs of ground-water monitoring wells for long term monitoring of the site.

3.2. LOCATION OF WELLS. The location of the wells to be installed shall be as shown on the drawings. The locations may be changed by the Contracting Officer.

3.3. PROTECTION OF EXISTING FACILITIES. The Contractor shall protect and maintain existing survey monuments and all existing monitoring wells from damage from equipment and vehicular traffic. Any damage shall be repaired by the Contractor. Any monitoring wells requiring replacement due to Contractor damage shall be installed according to these specifications.

3.4. PERMITS. All appropriate permits (well construction, water appropriation, zoning, etc.) required by the State of Indiana or local authorities shall be obtained by the Contractor prior to construction of the monitoring wells. Copies of all permits and records shall be a GA submittal. Copies of the permits shall also be retained by the Contractor for transferal to the Contracting Officer.

3.5. DISPOSAL OF DRILLING WASTES. Disposal shall be consistent with applicable federal, state, and local regulations or guidance. (Reference EPA/540/G-91/009 Management of Investigation Derived Wastes During Site Inspection.) The Contractor shall develop field protocols to minimize the amount of waste generated and to segregate clean materials from potentially contaminated materials.

4. DOCUMENTATION REQUIREMENTS. For each monitoring well installed, the documents outlined below shall be completed. In addition, all forms required by the State of Indiana for installation of monitoring wells shall be completed and submitted.

4.1. GEOLOGIC LOGS. Geologic logs shall be prepared by a geologist/hydrogeologist with drilling and monitoring well installation experience in the State of Indiana and present on-site during all well drilling and installation activities. Formation sampling shall be performed as specified in Paragraph 7.1 and as necessary to provide the information specified below. Logs shall be prepared on the forms provided as an attachment to these specifications. Logging will be done at a scale of 1 inch equals 1 foot. Copies of the logs shall be submitted as a GA submittal within 10 working days after completion of the boring and well installation program. Information provided on the logs shall include, but not be limited to, the following:

- 4.1.1. Name of the project and site.
- 4.1.2. Boring identification number.
- 4.1.3. Location of boring (coordinates).
- 4.1.4. Type of drill rig and name of drilling firm.
- 4.1.5. Date(s) borings were drilled.
- 4.1.6. Reference elevation for all depth measurements.

4.1.7. Name of driller and name and signature of hydrogeologist preparing log.

4.1.8. Nominal hole diameter and depth at which hole diameter changes.

4.1.9. Total depth of boring.

4.1.10. Method of drilling, including sampling methods and sample depths.

4.1.11. Depth of each change of stratum.

4.1.12. Description of the material of which each stratum is composed, according to the Unified Soil Classification System and ASTM D 2488, or standard rock nomenclature, as necessary.

4.1.13. Depth of any observed fractures or weathered zones in bedrock.

4.1.14. Depth and quantity of drill fluid loss or lost circulation.

4.1.15. Depth to water and date measured where water was first encountered and a static water level measured at a minimum of 24 hours after encountering water.

4.2. MONITORING WELL INSTALLATION DIAGRAMS. A monitoring well installation diagram shall be completed for each monitoring well installed. The diagram shall be prepared by the geologist/hydrogeologist present during well installation operations. Submission of the diagram shall be a GA submittal within 10 working days of the completion of the well installation program. The well will not be accepted by the Contracting Officer before the geologic logs (Paragraph 4.1 above) and installation diagrams are received. The diagram shall illustrate the as-built condition of the well and include, but not be limited to, the following items:

4.2.1. Name of the project and site.

4.2.2. Well identification number.

4.2.3. Name of driller and name and signature of geologist/hydrogeologist preparing diagram.

4.2.4. Date(s) of well installation.

4.2.5. Description of material from which the well is constructed, including casing and screen material, diameter and schedule of casing and screen, and joint type (threaded, coupled, etc.).

4.2.6. Total depth of well.

4.2.7. Nominal hole diameter.

4.2.8. Depth to top and bottom of screen, filter pack, etc. installed in the well.

4.2.9. Depth to top and bottom of any seals installed in the well boring (grout or bentonite).

4.2.10. Type of cement and bentonite used, mix ratios of grout, and quantities used.

4.2.11. Elevations of key features of the well, such as top of well casing, top and bottom of protective casing, ground surface, bottom of borehole, top and bottom of well screen, top and bottom of filter pack and top and bottom of seal(s).

4.2.12. Other pertinent construction details, such as gradation and depth of filter pack, quantities of filter pack installed,

slot size and percent open area of screen, and manufacturer of screen.

4.2.13. Well location by Indiana State Plane coordinates. A plan sheet shall also be included showing the coordinate system used and the location of each well. A plan sheet is not required for each well installation diagram; multiple wells may be shown on the same sheet.

4.2.14. Static water level upon completion of the well.

4.3. WELL DEVELOPMENT RECORD. A well development form shall be prepared and completed for each monitoring well installed. The form shall be prepared under the supervision of the geologist/hydrogeologist present during well installation operations. Submission of the form shall be a GA submittal within 10 working days of the completion of development. Information provided on the well development record shall include, but not be limited to, the following:

4.3.1. Date, time, and elevation of water level in the well, before development, name of project and site, well identification number and date of development.

4.3.2. Method used for development.

4.3.3. Time spent developing the well.

4.3.4. Volume of water removed.

4.3.5. Volume of water added to the well (if any).

4.3.6. Volume of sediment removed.

4.3.7. Source of any water added to the well and chemical analysis of added water.

4.3.8. Clarity of water before, during and after development, stated in nephelometric turbidity units according to ASTM D 1889.

4.3.9. Total depth of well after development.

4.3.10. Readings of pH, specific conductance, and temperature taken before, during, and after development.

4.3.11. The Contractor shall collect approximately one (1) liter of the last water withdrawn from the well during development in a clear glass jar, label and immediately photograph it with a 35 mm color slide, and submit the slide as part of the Well Development Record. The photograph shall be a suitably back-lit close up which shows the clarity of the water. Fines remaining in the water shall not be allowed to settle out prior to taking the photograph.

4.3.12. Name of individual developing well.

4.4. FIELD NOTE BOOK. A field note book shall be kept by the geologist present during well installation operations. Information shall include, but not be limited to the following:

4.4.1. Date and personnel present.

4.4.2. Visitors to the site.

4.4.3. Activities performed.

4.4.4. Quantities.

4.4.5. Weather conditions.

4.4.6. Any problems encountered.

5. **SUBMITTALS**. Contracting Officer's approval is required for submittals with a "GA" designation. Submittals having an "FIO" designation are for information only. The following shall be submitted in accordance with SECTION 01300 SUBMITTAL PROCEDURES:

SD-08 Statements\

Drilling and Installation Plan\; *GA*\

A plan describing the drilling methods and procedures to be used for monitoring well installation shall be submitted. The plan must either be prepared by, or approved and signed by, a geologist/hydrogeologist before submittal. The plan shall include, but not be limited to:

a. Description of well drilling and installation procedures, including placement of filter pack and seal materials.
b. Description of well construction materials, including well screen, riser pipe, filter pack, bentonite, and cement.
c. A description of quality control procedures to be used for placement of filter pack and all seals in the boring, including depth measurements. Also include example forms to be used for written drill logs, installation diagrams of wells, well development records.
d. Description of grouting and surface completion procedures.
e. A list of applicable publications, such as ASTM and/or API standards.
f. Description of well development method(s) to be used.

Permits\; *GA*\ (Paragraph 3.4).

Monitoring well geologic logs\; *GA*\ (Paragraph 4.1).

Monitoring well installation diagrams\; *GA*\ (Paragraph 4.2).

Field note book\; *GA*\ (includes details of daily activities, geologic log and well installation/construction log). (Paragraph 4.4)

Monitoring well development records\; *GA*\ (Paragraph 4.3).

Gradation analysis of filter pack\; *GA*\ (Paragraph 6.3).

Photographs of final development water\; *GA*\ (Paragraph 7.10).

Catalog data\; *FIO*\
Catalog data on well casing, well screen, bentonite, cement, protective covers, and sampling equipment

6. MATERIALS.

6.1. WELL CASING. Piping material used in construction of monitoring wells shall consist of flush-joint, threaded, 5 cm (2-inch) nominal diameter,

schedule 40 PVC. All pipe shall be new. A vented top cap that threads or slips onto the well casing or a expandable locking cap shall be provided.

6.2. WELL SCREEN. All well screens shall consist of new, 5 cm (2-inch) nominal diameter, schedule 40 PVC and shall be of a ***continuous slot wire-wrapped design***. Field or factory **slotted** screens **are not acceptable**. The slot size shall be 0.5 mm (0.020-inch) to optimize the screened portion of the aquifer. A 0.5 mm (0.020-inch) screen slot size was used in the existing monitoring wells. Screen length shall be 1.5 *meters* (5 feet) for the deep wells and 3 meters (10 feet) for the shallow wells. The screen shall be joined to the well casing by a flush-threaded joint. The bottom of the screen shall be sealed watertight by a flush-threaded PVC end cap. Sediment traps or sumps shall not be used below the screened interval.

6.3. FILTER PACK. Filter pack material shall consist of rounded to sub-rounded siliceous washed sand, composed of hard, tough, and durable particles free from adherent coatings. Organic matter, soft, friable, thin, or elongate particles are not permissible. No more than 5 percent by weight of calcareous material is permitted. The gradation of the filter pack shall be 16-30 Colorado silica or equivalent. The filter pack shall serve as an effective filter to prevent migration of formation materials into the well. Not more than 10% of the filter pack material shall pass through the well screen slots. A gradation analysis of the filter pack shall be a GA submittal.

6.4. BENTONITE SEAL AND GROUT. A bentonite seal shall be placed immediately above the filter pack to prevent contamination of the filter pack by grout. The seal shall consist of no greater than 13 mm (1/2-inch) diameter and no less than 6.5 mm (1/4-inch) diameter sodium bentonite pellets. The grout mixture shall consist of one 42.7-*kg* (94-lb) bag of Type II Portland cement, 3-5 percent by weight of minus-200-sieve sodium bentonite powder, and 30 *liters* (8 gal) of water. Cement shall meet the requirements of ASTM C 150.

6.5. PROTECTIVE COVERS. A lockable, water-tight, galvanized steel or aluminum protective casing shall be cemented in place around each monitor well. The length of the cover shall be sufficient for a minimum 0.61 *meter* (two foot) stick-up above grade and 0.91 *meter* (3 feet) below grade. Wall thickness of the casing shall be 6.5 mm (1/4 inch). All locks shall be keyed alike.

6.6. CATALOG DATA SUBMITTAL. Catalog data for all well screens, casing, bentonite, cement, and protective casings shall be a FIO submittal.

7. INSTALLATION.

7.1. DRILLING METHOD. The Contractor's proposed drilling method for monitoring wells shall be included in the Drilling and Installation Plan. The drilling method must prevent the collapse of formation material against, or within 50 mm (2 inches) of, the well screen and casing during installation of the well. The nominal borehole diameter shall be 26.7 cm (10 1/2-inches) for the deep monitoring wells and 21.6 cm (8 1/2-inches) for the shallow monitoring wells. The use of bentonite drilling mud is prohibited. Grease or oil on rod, casing, or auger joints is not permitted; however, Teflon tape or vegetable oil are acceptable. The drill rig shall be free from leaks of fuel, hydraulic fluid,

or oil which may contaminate the working area. Samples for geological logging shall be collect at a **minimum of every 1.5 *meter* (5-foot) intervals** with accordance to ASTM D 1586. The specific method of drilling, equipment, and precautions to be used to prevent contamination of the work area shall be detailed in the Contractor's Drilling and Installation Plan, Paragraph 4.1.1. above.

7.2. DECONTAMINATION. The drill rig, drill rods, augers or casing, and all other associated equipment that shall enter the bore hole shall be cleaned with high-pressure steam prior to drilling at each location. Decontamination shall be performed at a central decontamination station as directed by the Contracting Officer. All screen and well casing shall be steam-cleaned immediately prior to installation in the well. Factory sealed (plastic wrapped) screen and well casing shall not be substituted for the pre-installation cleaning.

7.3. WATER SOURCE. If well drilling/installation requires the use of water, water from a clean, potable water source shall be designated by the Contracting Officer. The Contractor shall be responsible for obtaining the water from the source and transporting it to the site. The container (tank) used in transporting the water to the site must be decontaminated according to Paragraph 7.2 above prior to its usage at the site.

7.4. WELL DEPTH. The anticipated depth of the monitoring well boring shall be approximately 6 *meters* (20 feet) for the shallow monitoring wells and 18.3 *meters* (60 feet) for the deep monitoring wells. Actual placement may vary slightly depending on site conditions.

7.5. SCREEN PLACEMENT. For the shallow wells, monitoring well screen shall be placed so that approximately 1/3 of the screen is above the static ground-water table. For the deeper wells, monitoring well screen shall be screened within the intermediate aquifer at 16.8 to 18.3 *meters* (55 to 60 feet) below grade.

7.6. FILTER PACK PLACEMENT. The lowermost 152 mm (6 inches) of filter pack may be placed in the boring prior to installation of the well casing. (**NOTE:** The well casing and screen shall not be allowed to be out of tension during the installation.) The filter pack shall be tremied into place, from the bottom of the borehole up, in such a manner as to ensure uniform placement around the screen to 0.6 *meters* (two-feet) above the screen interval in deep monitoring wells and 0.3 *meters* (one-foot) in the shallow monitoring wells. Hollow stem augers or temporary casing left shall be withdrawn from the boring as the filter pack is placed. The level of the filter pack shall not fall below the bottom of the auger or casing during placement of the filter pack. Any water added to the sand during the tremied operation shall meet the requirements of Paragraph: 7.3 WATER SOURCE of this specification. All filter pack material shall be protected from contamination prior to placement by storing it in plastic-lined bags in a location protected from the weather. All filter pack materials shall be transported to the well site in a manner that prevents contamination by other soils, oil and grease, and other chemicals.

7.7. BENTONITE SEAL AND GROUT. A bentonite seal shall be placed immediately above the filter pack to prevent contamination of the filter pack by grout. A 0.6-*meter* (two-feet) thick seal shall be installed. The seal shall consist of no greater than 13 mm (1/2-inch) diameter and no less than 6.5 mm (1/4-inch) diameter sodium bentonite pellets. The bentonite pellet seal shall be allowed to hydrate for a minimum of four hours prior to placement of grout. The grout mixture is described in Paragraph 6.4. The grout mixture shall be tremied into place and discharged using a side-discharging nozzle or apparatus which will not disturb the bentonite seal.

7.8. PROTECTION OF THE WELL. At all times during the progress of the work, precautions shall be taken to prevent tampering with the well or the entrance of foreign material into it. Run-off will be prevented from entering the well during construction. Upon completion of the well, a suitable vented cap or expandable locking cap shall be installed to prevent material from entering the well. The well riser shall be surrounded by a larger diameter protective non-corrosive steel or aluminum casing rising a minimum 0.6 *meter* (two foot) stick-up above grade and 0.9 *meter* (3 feet) distance below the ground surface. Wall thickness of the casing shall be 6.4 mm (1/4 inch). The casing shall be installed in a manner that does not hinder access to the monitoring well for purposes of taking samples or water level measurements. The outside of all protective casings shall be painted ***Safety Yellow.*** The protective casing shall be provided with a locking cap and lock. All locks shall be non-rusting and keyed alike. Three (3) duplicate keys shall be provided, one set of three keys shall be provided to the Contracting Officer. A minimum 0.9 *meter* (3 feet) by 0.9 *meter* (3 feet) square by 102 mm (4 inches) thick concrete pad, sloped away from the well, shall be constructed around the well casing with the top outer edge at the final ground level elevation. Three 76.2 mm (3-inch) diameter or larger steel posts shall be equally spaced around the well and cemented in place outside the concrete pad. The ground immediately surrounding the top of the well shall be sloped away from the well.

7.9. WELL ALIGNMENT. All wells shall be set straight and true to line. After placement of the filter pack, well alignment shall be tested by passing a 1.5 *meter* (5-foot) long section of pipe, equal or greater in diameter than the inner diameter of the largest tool or equipment (i.e. sensing devices, geophysical tools, bailers, pumps, etc.) which shall be placed in the well and shall pass freely the entire length of the well riser and screen. The results of this test shall be recorded on the Well Installation Diagram. If the pipe does not pass freely, the well will not be accepted. If not accepted, the well shall be removed from the boring and the filter pack drilled out. The well shall then be reinstalled according to this specification. The pipe section used to test well alignment shall be decontaminated with steam prior to each test.

7.10. WELL DEVELOPMENT. Monitoring wells shall be developed to remove fine sands, silts, and clays from the filter pack and the formation immediately surrounding the well. Development shall consist of mechanical surging and bailing using a mechanical surge block and a bottom filling/emptying bailer until little or no sediment enters the well. This shall continue for a minimum of two hours. At the end of that time, the well shall be continuously pumped using an electric submersible pump, a gas drive positive displacement pump or a bladder pump. Temperature, pH, nephelometric turbidity, and specific conductivity shall

be monitored during pumping. Pumping shall continue until these parameters have stabilized (less than 10% change between four consecutive readings) and the water is clear and free of fines. If these parameters have not stabilized after 8 hours of continuous pumping, then the Contracting Officer shall be contacted for further direction. If the addition of water is required to facilitate surging and bailing only formation water from that well shall be used. If this is not practical due to tightness of the formation then only bailing shall be done. In all cases, the utmost care shall be taken not to collapse well screens during development activities and at least as much water as was introduced during drilling shall be removed from each well. The Contractor shall collect approximately one (1) liter of the last water withdrawn from the well during development in a clear glass jar, label and immediately photograph it with a 35 mm color slide, and submit the slide as part of the Well Development Record. The photograph shall be a suitably back-lit close up which shows the clarity of the water. Fines remaining in the water shall not be allowed to settle out prior to taking the photograph. The depth of any sediment which collects in the bottom of the jar after the sample is allowed to settle shall be noted on the record of well development. The nephelometric turbidity of the water shall be determined in accordance with ASTM D 1889 and shown on the Well Development Record. Ground water produced during well development shall be handled as directed in Paragraph 3.5.

7.11. WELL IDENTIFICATION. A corrosion-resistant metal tag shall be affixed to the inside of the lid of the protective cover. The metal tag shall be stamped with the well identification number and the top of well casing elevation (in feet). The newly installed wells shall be labeled WT119A, WT119B, WT120A and WT120B. The shallow wells will have the suffix "A" whereas the intermediate wells shall have the suffix "B" for identification.

8. WELL ACCEPTANCE. It is the responsibility of the Contractor to properly construct and install, develop, and test all wells according to the requirements of this specification so that they are suitable for the intended purpose. If the Contractor installs wells that are not functional or not in accordance with specifications, the Contracting Officer will disapprove the well and direct the Contractor to repair or replace it at the Contracting Officer's discretion. Wells that are replaced shall be abandoned in accordance with SECTION \=02915=\ WELL ABANDONMENT. Records of any corrective actions taken to make functional any installation, procedure, or equipment shall be a FIO submittal.

ELEVATION GROUND WATER			PROJECT
DATE INSTALLED	STARTED	COMPLETED	LOCATION (Coordinates or Station)
ELEVATION TOP OF HOLE			SIGNATURE OF INSPECTOR
TOTAL DEPTH OF HOLE			HOLE NO.

MONITORING WELL CONSTRUCTION DIAGRAM

(ALL MEASUREMENTS FROM GROUND SURFACE)

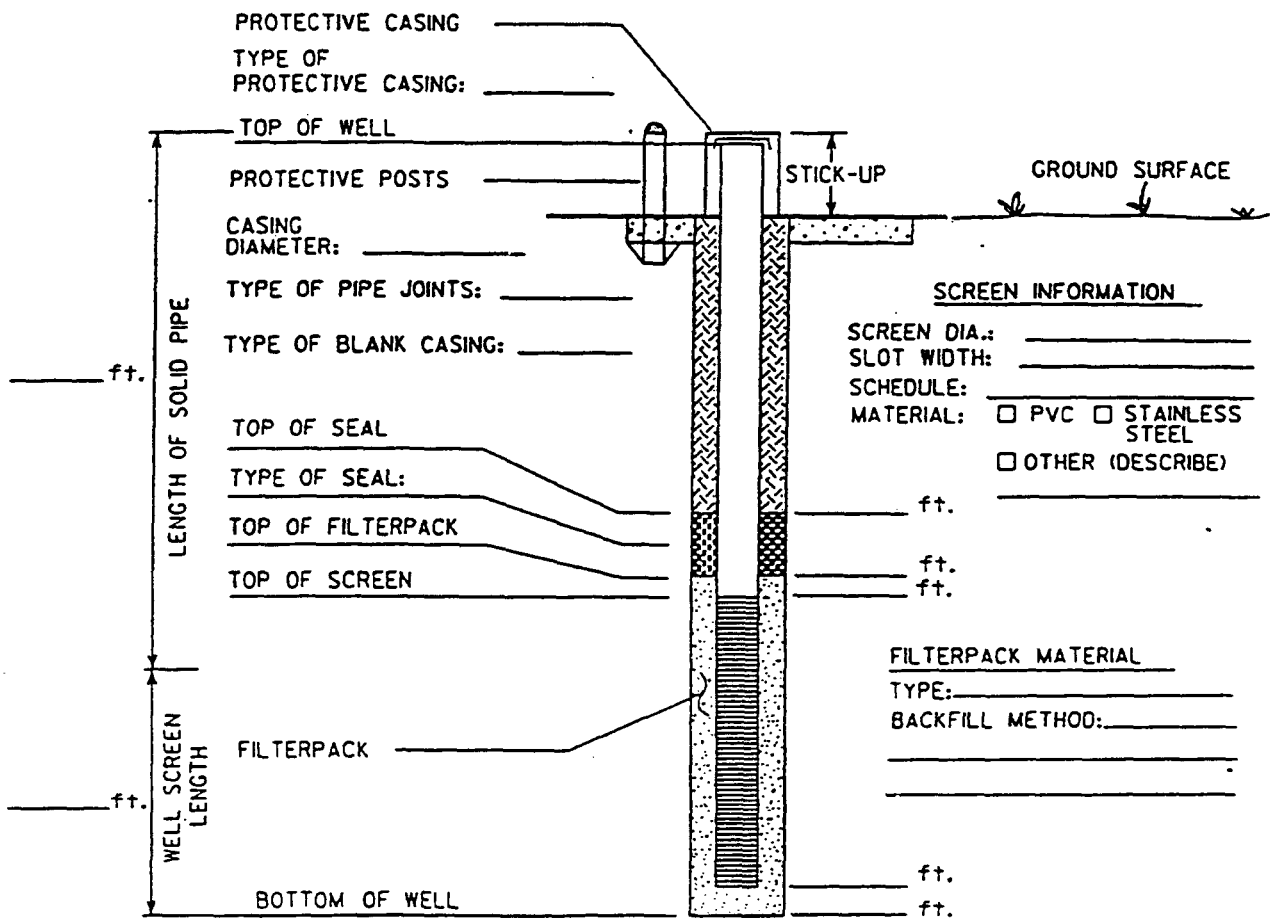

SCREEN INFORMATION

SCREEN DIA.: _____
SLOT WIDTH: _____
SCHEDULE: _____
MATERIAL: ☐ PVC ☐ STAINLESS STEEL
☐ OTHER (DESCRIBE) _____

FILTERPACK MATERIAL

TYPE: _____
BACKFILL METHOD: _____

WELL DEVELOPMENT

METHOD: _____
TIME SPENT DEVELOPING: _____
VOLUME OF WATER REMOVED: _____
VOLUME OF WATER ADDED: _____
DESCRIPTION OF PREDEVELOPMENT WATER:
_____
_____
DESCRIPTION OF POST DEVELOPMENT WATER:
_____
_____

WATER LEVEL SUMMARY

WATER LEVEL MEASUREMENTS
DATE/TIME/LEVEL _____
_____
_____
_____

DEPTH FROM TOP CASING AFTER DEVELOPMENT:
_____

02910AT-1

HTW DRILLING LOG

HOLE NO.

1. COMPANY NAME	2. DRILLING SUBCONTRACTOR	SHEET 1 OF SHEETS
3. PROJECT	4. LOCATION	
5. NAME OF DRILLER	6. MANUFACTURER'S DESIGNATION OF DRILL	
7. SIZES AND TYPES OF DRILLING AND SAMPLING EQUIPMENT	8. HOLE LOCATION	
	9. SURFACE ELEVATION	
	10. DATE STARTED	11. DATE COMPLETED
12. OVERBURDEN THICKNESS	15. DEPTH GROUNDWATER ENCOUNTERED	
13. DEPTH DRILLED INTO ROCK	16. DEPTH TO WATER AND ELAPSED TIME AFTER DRILLING COMPLETED	
14. TOTAL DEPTH OF HOLE	17. OTHER WATER LEVEL MEASUREMENTS (SPECIFY)	

18. GEOTECHNICAL SAMPLES	DISTURBED	UNDISTURBED	19. TOTAL NUMBER OF CORE BOXES

20. SAMPLES FOR CHEMICAL ANALYSIS	VOC	METALS	OTHER (SPECIFY)	OTHER (SPECIFY)	OTHER (SPECIFY)	21. TOTAL CORE RECOVERY %

22. DISPOSITION OF HOLE	BACKFILLED	MONITORING WELL	OTHER (SPECIFY)	23. SIGNATURE OF INSPECTOR

ELEV. a	DEPTH b	DESCRIPTION OF MATERIALS c	FIELD SCREENING RESULTS d	GEOTECH SAMPLE OR CORE BOX NO. e	ANALYTICAL SAMPLE NO. f	BLOW COUNTS g	REMARKS h

PROJECT

HOLE NO.

02910AT-2

HTW DRILLING LOG

HOLE NO.

PROJECT	INSPECTOR	SHEET OF SHEETS

ELEV a	DEPTH b	DESCRIPTION OF MATERIALS c	FIELD SCREENING RESULTS d	GEOTECH SAMPLE OR CORE BOX NO. e	ANALYTICAL SAMPLE NO. f	BLOW COUNTS g	REMARKS h

PROJECT	C2910AT-3	HOLE NO.

SECTION 02915
WELL ABANDONMENT

INDEX

1. SCOPE
2. APPLICABLE PUBLICATIONS
3. SUBMITTALS
4. MATERIALS
5. PROCEDURES
6. DOCUMENTATION
7. WELLS TO BE ABANDONED

Attachment: Water Table Installation Diagram

1. SCOPE. This specification covers requirements for the abandonment of WT103A at this site. This specification also shall be used to abandon monitoring wells damaged by the Contractor during construction or as directed by the Contracting Officer.

2. APPLICABLE PUBLICATIONS. The publications listed below form a part of this specification to the extent referenced. The publications are referred to in the text by basic designation only.

2.1. AMERICAN SOCIETY FOR TESTING AND MATERIALS (ASTM) PUBLICATIONS.
C 150-92 "Standard Specification for Portland Cement"

2.2. AMERICAN PETROLEUM INSTITUTE (API) PUBLICATIONS.
API SPEC 13A "Specification for Drilling-Fluid Materials"

2.3. STATE OF INDIANA, DEPARTMENT OF NATURAL RESOURCES
DIVISION OF WATER: Indiana Register, Vol. 15, No. 2, Title 310 "Final Rules Concerning the Regulation of Water Well Drilling."

Indiana Code 25-29-1.5, "Water Well Drilling Contractors."

3. SUBMITTALS.

Contracting Officer approval is required for submittals with a "GA" designation; submittals having an "FIO" designation are for information only. The following shall be submitted in accordance with Section \=01300=\ SUBMITTAL PROCEDURES:

SD-09 Reports\

Reports and documentation required by state and local regulatory authorities\; *FIO*\

All reports and documentation for well abandonment.

Report of Well Abandonment\; *GA*\

Well Abandonment Diagram\; *GA*\

4. MATERIALS.

4.1. GROUT. The well to be abandoned shall be backfilled with cement-bentonite grout. The grout mixture shall consist of one 42.7-*kg* (94-lb) bag of Type II Portland cement, 3-5 percent by weight of minus-200-sieve sodium bentonite powder, and 30 *liters* (8 gal) of water. Cement shall meet the requirements of ASTM C 150.

5. PROCEDURES.

5.1. REGULATORY REQUIREMENTS. The Contractor shall abandon the well designated in Paragraph 7.0 according to the requirements of the State of Indiana and the general methods listed below. Should the regulatory requirements and the methods specified below differ in any way the Contractor shall notify the Contracting Officer to resolve potential differences.

5.2. WELL DEPTH AND WATER LEVEL MEASUREMENT. Immediately prior to abandonment, the water level in the well and total depth of the well shall be measured and recorded to the nearest 0.30 *cm* (0.01 foot). These measurements will be used to determine the amount of grout needed to grout the hole. These measurements shall be included on the Record of Well Abandonment.

5.3. BACKFILLING. Wells shall be sealed by backfilling under pressure with cement-bentonite grout. Grout shall be placed through a side-discharge tremie pipe which is lowered down the inside of the well to within 0.9 *meters* (3 ft) of the bottom of the well screen. A packer shall be set between the tremie pipe and the well casing approximately 0.6 *meters* (2 ft) below ground surface. A volume of grout equal to the calculated volume of the void space in the filter pack and the well screen and riser below the packer shall then be pumped in one continuous operation through the tremie pipe to fill the well screen and casing and the filter pack. The pumping pressure shall be the minimum necessary to force the grout out into the filter pack. The tremie pipe and packer shall then be withdrawn from the well and the remaining volume of the hole filled with grout. Grout shall be periodically added to the hole to maintain the grout level in the well within 0.9 *meters* (3 ft) of the ground surface for 24 hours to allow the grout to set. The total volume of grout added to maintain the grout level within 0.9 *meters* (3 ft) of the ground surface shall be noted on the completion log.

5.4. SURFACE COMPLETION. No sooner than 24 hours after grouting of the well is completed, the protective casing and concrete surface pad shall be removed. The well riser shall be cut off 0.6 to 0.9 *meters* (one to two feet) below ground surface. Grout shall then be added to fill the remaining riser and hole to within 152 *mm* (6 inches) of the ground surface. After this grout has set for a minimum of 24 hours, the remainder of the hole shall be covered with soil.

6. DOCUMENTATION. The Contractor shall complete all *reports and documentation required by state and local regulatory authorities*\ for well abandonment. The Contractor shall be responsible for filing the completed reports with the proper agencies. A *report of well abandonment*\ activities and a well abandonment log shall be a GA submittal.

7. WELL INFORMATION. The well log, WT103A, has been included at the end of this section.

Donohue

Engineers & Architects
COMPUTER AIDED DESIGN/DRAFTING

Water Table Well Installation Diagram

Form [redacted]

Site: HIMCO DUMP Date: 11/11/90
Inspected By: R. CANNESTA Project No. [illegible] Well No. WT-103A
Driller/Contractor D. ELLIS / MATHES

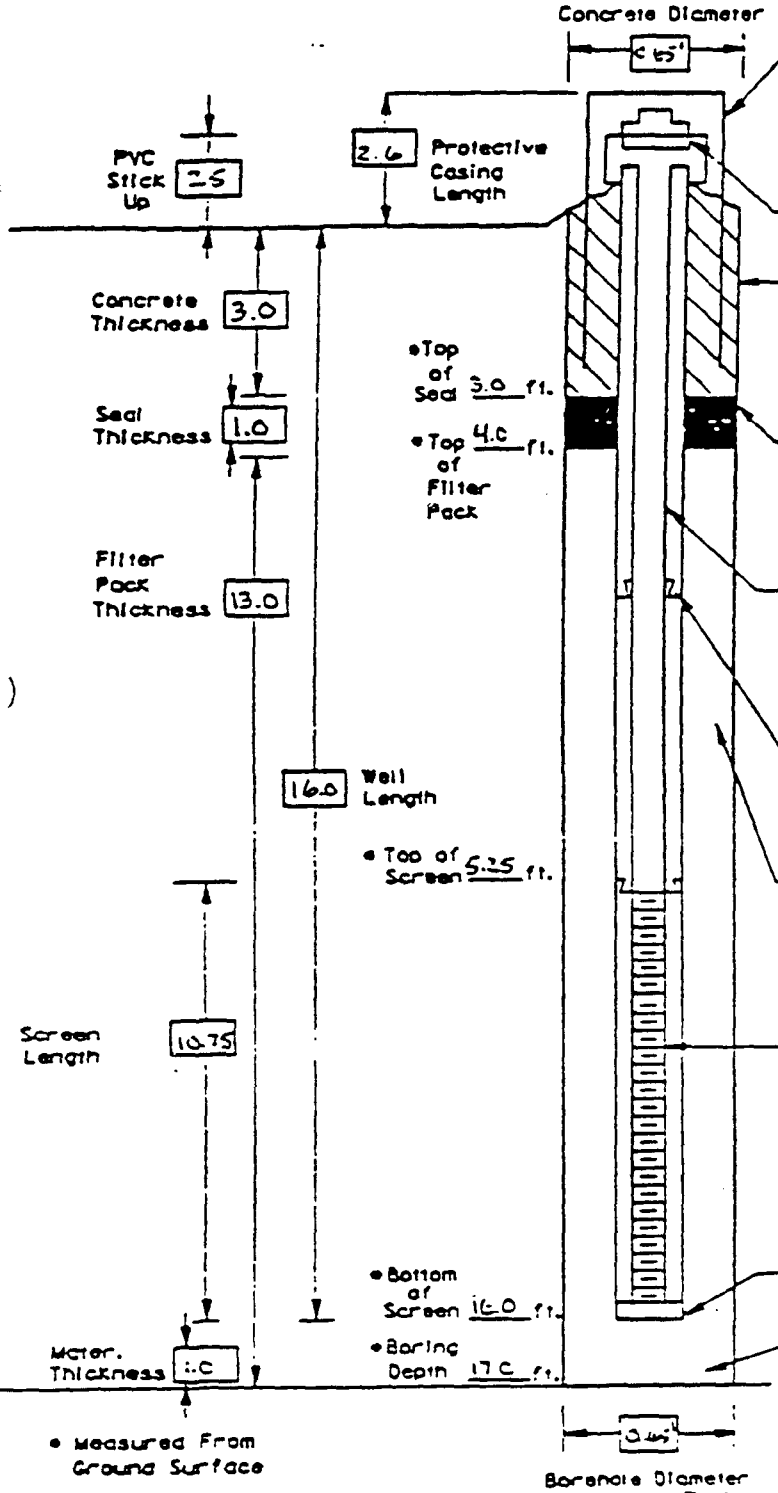

• Measured From Ground Surface

PROTECTIVE CASING
Type STEEL Vented (Yes)/No Type [illegible]
Diameter 4" Locked YES MASTER
Length 5.0 Key # 2532

GUARD POSTS

CAP OR PLUG Vented (Yes)/No Type SLIP COUPLE WITHREADED PLUG

CONCRETE COLLAR
Cement PREE-MIX lbs.+Water _____ gal. _____
Total Quantity _____ gal. _____
Manufacturer GENERAL CONTRACTORS ST LOUIS, MO

SEAL
Powder/Granular (Pellets) 3/8 Quantity 3 GAL
Hydrated 2.5 gal.. Time 12:08-14:
Manufacturer PELONITE by ROCKTEST

PIPE Type FLUSH THREADED STAINLESS Schedule TYPE 5 GRADE 304
O.D. 2.0" I.D. 1.9"
Length/Sec. 10.0 No. Of Sec. PARTIAL
Manufacturer DIEDRICH

JOINTS Flush Threaded Yes/No _____
Teflon Taped Yes/No O-Ring Yes/No
Manufacturer _____

FILTER PACK Type(s) SILICA SAND
Source COLORADO SILICA SAND
Volume 2.5 100 lb BAGS & 18.5
Manufacturer COLORADO SILICA SAND COLORADO SPRINGS COLO.

SCREEN CONTINUOUS WIRE
Type WRAP STAINLESS Schedule TYPE 5 GRADE 304
Length/Sec. 5.3 No. of Sec. 2
O.D. 2.0" I.D. 1.9"
Slot Size 0.010 No. Slots/ft. _____
Manufacturers DEIDRICH

CAP OR PLUG Type STAINLESS THREADED PLUG Length 0.15

MATERIAL COLLAPSE & FILTER PACK

WATER SOURCE ELKHART MUNICIPAL WATER PLANT

Notes: _____

029/5AT-1

SECTION 02935

TURF

INDEX

PART 1 GENERAL
1.1 SUMMARY
1.2 REFERENCES
1.3 SUBMITTALS
1.4 DELIVERY, INSPECTION, STORAGE, AND HANDLING

PART 2 PRODUCTS
2.1 MATERIALS

PART 3 EXECUTION
3.1 SEEDING TIMES AND CONDITIONS
3.2 SITE PREPARATION
3.3 SEEDING
3.4 EROSION CONTROL MATERIAL
3.5 APPLICATION OF PESTICIDE
3.6 RESTORATION AND CLEAN UP
3.7 PROTECTION OF TURFED AREAS
3.8 TURF ESTABLISHMENT PERIOD
3.9 FINAL ACCEPTANCE

SECTION 02935

TURF

PART 1 GENERAL

1.1 SUMMARY

Seed varieties and quantities specified shall be uniformly distributed over all ground areas disturbed by grading and/or trenching and not otherwise surfaced and in such manner that will produce an even stand of grass over the entire area seeded, as shown on the drawings and as specified.

1.2 REFERENCES

The publications listed below form a part of this specification to the extent referenced. The publications are referred to in the text by basic designation only.

AGRICULTURAL MARKETING SERVICE (AMS)

AMS-01(Amended Thru: Aug 1988) Federal Seed Act Regulations (Part 201-202)

COMMERCIAL ITEM DESCRIPTION (CID)

CID A-A-1909 (Basic) Fertilizer

1.3 SUBMITTALS

Contracting Officer approval is required for submittals with a "GA" designation; submittals having an "FIO" designation are for information only. The following shall be submitted in accordance with Section 01300 SUBMITTALS PROCEDURES:

SD-01 Data\

Erosion Control Material\; *GA*\.
Manufacturer's literature discussing physical characteristics, application and installation instructions.

Equipment\; *GA*\.
The equipment to be used and calibration test for seed application.

SD-07 Schedules\

Delivery\; *FIO*\.
Delivery schedule, at least 10 days prior to the intended date of the first delivery.

SD-08 Statements\

Maintenance Report\; *FIO*\.
Written record of all maintenance work performed during the turf establishment period shall be submitted to the Contracting Officer.

Turf Establishment Period\; *FIO*\.
Written calendar time period for the turf establishment period. When there is more than one turf establishment period, the boundaries of the turfed area covered for each period shall be described.

Application of Pesticide\; *GA*\.
Pesticide treatment plan with proposed sequence of pesticide treatment work. The pesticide trade name, chemical composition, formulation, concentration, application rate of active ingredients and method of application for all materials; and the name and state license number of the state certified applicator shall be included.

SD-13 Certificates\

Certificates of compliance certifying that materials meet the requirements specified, in accordance with paragraph MATERIALS, prior to the delivery of materials. Certified copies of the reports for the following materials shall be included:

Seed\; *GA*\.
For mixture, percent pure live seed, minimum percent germination and hard seed, maximum percent weed seed content, date tested, and state certification
Seed shall be packaged by the supplier with mixture and certification tags attached.

Fertilizer\; *GA*\.
Soil amendments shall be delivered to the site in the original, unopened containers bearing the manufacturer's chemical analysis and percent composition. In lieu of containers, soil amendments may be furnished in bulk. A chemical analysis shall be provided for bulk deliveries.

Pesticide\; *GA*\.
Pesticide material shall be delivered to the site in the original, unopened containers bearing legible labels indicating the Environmental Protection Agency (EPA) registration number and the manufacturer's registered uses.

Soil Test\; *GA*\.
A soil test shall be provided for topsoil existing and delivered to the site. Test shall include pH, particle size, chemical analysis, and mechanical analysis.

1.4 DELIVERY, INSPECTION, STORAGE, AND HANDLING

1.4.1 *Delivery*\

Notify the Contracting Officer, in writing, 10 days prior to the first delivery.

1.4.2 Inspection

Seed, shall be inspected upon arrival at the job site by the Contracting Officer for conformity to type and quality in accordance with paragraph MATERIALS. Topsoil, Fertilizer, shall be inspected for meeting specified requirements and unacceptable materials shall be removed from the job site.

1.4.3 Storage

Materials shall be stored in areas designated by the Contracting Officer. Seed, Fertilizer, shall be stored in cool, dry locations away from contaminants. Pesticides shall not be stored with other landscape materials.

1.4.4 Handling

1.4.4.1 Materials

Except for bulk deliveries, materials shall not be dropped or dumped from vehicles.

PART 2 PRODUCTS

2.1 MATERIALS

2.1.1 *Seed*

2.1.1.1 Seed Classification

State Certified seed of the latest season's crop shall be provided in original sealed packages bearing the producer's guaranteed analysis for percentages of mixture, purity, germination, hard seed, weed seed content, and inert material. Labels shall be in conformance with AMS-01 and applicable state seed laws.

2.1.1.2 Seed Mixtures

Field Seed Areas
Seed mixtures shall be proportioned by weight as follows:

Seed		Pounds Per Acre
Kentucky 31 Fescue		200
Red Top Grass		2
Nurse Crop*		20
	Total	222

Water tolerant grasses		
Red Top Grass		5
Switchgrass		5
Western Wheatgrass		5
Kentucky 31 Fescue		200
	Total	215

* Foxtail Millet(Seeded only between May 1 and Aug. 15)
Annual Rye(Seeded only between Feb.16-Apr 30, Aug 16-Oct 31)
Winter Rye(Seeded only between Nov.1-Feb. 15)

2.1.1.3 Quality

Weed seed shall not exceed 1 percent by weight of the total mixture. Wet, moldy, or otherwise damaged seed shall be rejected.

2.1.1.4 Temporary Seed

The temporary seed for erosion control shall be as follows:

Common Name	Pounds Pure Live Seed per Acre
Nurse Crop indicated above for specific dates	100

2.1.1.5 Seed Mixing

The mixing of the seed shall be done by the Seed Supplier prior to delivery to the site.
Bulk quantities of seed shall be labeled as required in the paragraph Seed Classification.

2.1.1.6 Commercial Seed Formula

The following formula shall be used to determine the amount of commercial seed required to provide in each kind of seed the specified quantities of Pure Live Seed with Purity and Germination expressed as whole numbers:

$$\frac{\text{Pounds Pure Live Seed} \times 100 \times 100}{\text{Purity} \times \text{Germination}} = \text{Pounds of Seed Required}$$

2.1.2 Soil Amendments

Soil amendments shall consist of fertilizer, meeting the following requirements.

2.1.2.1 *Fertilizer*\

Fertilizer shall be commercial grade, free flowing, low in salts, uniform in composition and conforming to CID A-AA-1909. Granular fertilizer shall consist of nitrogen-phosphorus-potassium, ratio: 16 parts nitrogen, 48 parts phosphorus, and 0 parts potassium. When Slow release nitrogen forms are used in the fertilizer mixture they shall be derived from sulphur coated urea, urea formaldehyde, plastic or polymer coated prills, or isobutylenediurea (IBDU).

2.1.3 Topsoil

If additional topsoil is required beyond that available from grading operations, it shall be furnished by the Contractor and shall be a natural, friable soil representative of productive soils in the vicinity, and approved by the Contracting Officer. It shall be obtained from well-drained areas and shall be free of any admixture of subsoil, foreign matter, objects larger than 1 inch in any dimension, toxic substances, and any material or substance that may be harmful to plant growth. Topsoil shall be in accordance with Section 02210 GRADING.

2.1.4 Mulch

The Contractor shall use hay or straw fixed in place with Mechanical Anchoring Equipment on all surfaces with slopes shown on the plans to be less than 4 horizontal to 1 vertical. All seeded areas shown on the plans to have slopes greater than or equal to 4 horizontal to 1 vertical will require an erosion control blanket. All other mulch materials and/or methods of application shall be approved by the Contracting Officer. Mulch shall be free from weeds, mold, and other objectionable materials.

2.1.4.1 Straw

Straw Mulch shall be long stem threshed straw of oats, wheat or rye that is free from noxious weeds, mold or other objectionable material. The straw mulch shall contain at least 50 percent by weight of the material to be 10 inches or longer. Straw shall be in an air-dry condition and suitable for placing with blower equipment.

2.1.4.2 Hay

Hay shall be native prairie hay furnished in an air-dry condition suitable for placing with commercial mulch-blowing equipment. Hay shall be free of noxious weeds, mold or other objectionable material.

2.1.5 Water

Water shall not contain elements toxic to plant life and shall be obtained from an approved source prior to use.

2.1.6 *Erosion Control Material*

Soil erosion control shall conform to the following:

2.1.6.1 Soil Erosion Control Blanket

Erosion Control Blanket shall be a machine produced knitted straw blanket-like mat construction, covered on two sides with a biodegradable plastic mesh or interwoven thread. Straw blanket shall weigh approximately 1/2 pound per square yard and be similar or equal to that produced by North American Green, model S150.

2.1.6.2 Anchors

Erosion control anchors material shall be as recommended by the manufacturer for the type of erosion control material used.

2.1.6.3 Soil Erosion Control Fence

Silt fencing shall be made of a strong rot-proof synthetic fiber. The fibers shall be resistant to deterioration due to ultraviolet light and heat exposure. The synthetic fibers shall be woven into a fabric. No additional fencing or wire backing is required. The fencing material shall have a strong tie cord in the

top of the material. Low porosity silt fence shall be the same as or equal to Propex-Silt Stop, Mirafi 700x, or Beltech 755 or approved equal.

PART 3 EXECUTION

3.1 SEEDING TIMES AND CONDITIONS

3.1.1 Seeding Time

3.1.1.1 Field Seed

Seed Mix shall be sown for spring planting from April 1 to June 15, and for fall planting from August 1 to Sept 15. Dormant planting shall be from Nov 1 to Dec 1.

3.1.2 Environmental Conditions

Seeding, operations shall be performed only during periods when beneficial results can be obtained. When drought, excessive moisture or other unsatisfactory conditions prevail, the work shall be stopped when directed. When special conditions warrant a variance to the operations, proposed times shall be submitted to and approved by the Contracting Officer.

3.2 SITE PREPARATION

3.2.1 Grading

The Contracting Officer shall verify that finished grades are as indicated on the drawings, and the placing of topsoil and smooth grading have been completed in accordance with Section 02210 GRADING. Any deviations therefrom shall be corrected prior to seeding. Soil used for repair of erosion and correction of grade deficiencies shall conform to that specified in the paragraph Topsoil.

3.2.2 Tillage

3.2.2.1 Minimum Depth

Soil on slopes gentler than 3-horizontal-to-1-vertical shall be tilled to a minimum depth of 6 inches. Slopes between 3-horizontal-to-1-vertical and 1-horizontal-to-1 vertical, the soil shall be tilled to a minimum depth of 2 inches by scarifying with heavy rakes, rotating chains drawn by tractor from the top of the slope, or rototillers when soil conditions and length of slope permit. On slopes 1-horizontal-to-1 vertical and steeper, no tillage is required.

3.2.3 Finished Grading

3.2.3.1 Preparation

Turf areas shall be filled as needed or have surplus soil removed to attain the finished grade. Drainage patterns shall be maintained as indicated on drawings. Turf areas compacted by construction operations shall be completely pulverized by tillage. Finished grades adjacent to walks, curbs, pavements, shall be 1 inch

below the adjoining surfaced area. New soil surfaces shall be blended to meet existing soil surfaces.

3.2.3.2 Field Area Debris

Field areas shall have debris and stones larger than 4 inches in any dimension removed from the surface.

3.2.3.3 Protection

Finished graded areas shall be protected from damage by vehicular or pedestrian traffic and erosion.

3.2.4 Application of Soil Amendments

3.2.4.1 *Soil Test*

A soil test shall be performed for pH, chemical analysis and mechanical analysis to establish the quantities and type of soil amendments required to meet local growing conditions for the type and variety of grass specified.

3.2.4.2 Application rates

Fertilizer shall be applied at the rates determined by the Contractor's Soil Test. Test reports shall be submitted to the Contracting Officer in accordance with paragraph: SUBMITTALS. Bids shall be based on the following application rate of actual or available fertilizer; if the following rate is more or less than the rate required by paragraph: SOIL TEST an adjustment in the Contract Price will be made as provided in the CONTRACT CLAUSES:

fertilizer: 200 pounds/acre

3.2.4.3 Fertilizer

Fertilizer shall be incorporated into the soil to a minimum depth of 2 inches.

3.2.4.4 Organic Soil Amendments

3.3 SEEDING

3.3.1 General

Prior to seeding, any previously prepared seedbed areas compacted or damaged by interim rain, traffic or other cause, shall be reworked to restore the ground condition previously specified. Seeding operations shall not take place when the wind velocity will prevent uniform seed distribution.

3.3.2 *Equipment*

Immediately prior to the commencement of seeding operations, the Contractor shall conduct seeding equipment calibration tests in the presence of the Contracting Officer.

3.3.3 Applying Seed

Seed shall be applied by seeding equipment unless steep slopes or manuevering space prohibit the use of primary type seeding equipment with packer wheels.

3.3.3.1 Drill Seeding

Seed shall be uniformly seeded to an average depth of 1/2 inch at the rate specified. Row markers shall be used with the seeder.

3.3.3.2 Broadcast Seeding

Seed shall be uniformly broadcast at the rates specified using broadcast seeders. Half of the seed shall be broadcast in one direction, and the remainder at right angles to the first direction. Seed shall be covered to an average depth of 1/4 inch but no more than 3/4 inch by disk harrow, steel mat drag, cultipacker, or other approved device. All broadcasted areas shall have the seed raked into the soil by some means.

3.3.3.3 Rolling

Immediately after seeding, except for slopes 3-horizontal-to-1 vertical and greater, the entire area shall be firmed with a roller not exceeding 90 pounds for each foot of roller width. Areas seeded with primary seeders equipped with rollers shall not be rolled.

3.3.4 Mulching

Mulching shall be performed the same day as seeding. Unless specified otherwise mechanical anchoring of mulch shall be performed.

3.3.4.1 Straw or Hay Mulch

Straw or hay mulch shall be spread uniformly, in a continuous blanket, at the rate of 2 tons per acre. Mulch shall be spread by hand, blower-type mulch spreader or other approved method. Mulching shall be started on the windward side of relatively flat areas or on the upper part of a steep slope and continued uniformly until the area is covered. The mulch shall not be bunched. All seeded areas shall be mulched on the same day as the seeding.

3.3.4.2 Mechanical Anchoring

Immediately following spreading, the mulch shall be anchored to the soil by a V-type-wheel land packer, a scalloped-disk land packer designed to force mulch into the soil surface a minimum of 3 inches, or other suitable equipment.

3.3.5 Watering Field Seeded Areas

Watering of field seeded areas shall not be required.

3.4 EROSION CONTROL MATERIAL

The surface of ditches and slopes to receive soil erosion control material shall be finished to a smooth and even condition with all debris, roots, stones and lumps raked out and removed.

3.4.1 Erosion Control Blanket

Soil erosion control blanket shall be unrolled on newly seeded areas. Apply wire staples vertically through the blanket into the ground, keeping the blanket taut against the anchor staples. Erosion control blanket placement shall be accomplished without damage to the installed material or distortion of established grades. Erosion control blanket shall be installed in accordance with the manufacturer's recommendations where indicated on the drawings.

3.4.1.1 Maintenance

The erosion control material shall be maintained until all work on the entire contract or designated portion thereof has been completed and accepted. Maintenance shall consist of the repair of eroded areas and the repair or replacement and restapling of loose or undermined erosion control material, including reseeding.

3.4.2 Erosion Control Fence

Soil Erosion Control Fence shall be installed where indicated on the plans and in those areas required by the Contracting Officer for control of sheet or gully erosion. A six inch deep trench shall be dug just outside the posts for the full length of the silt fence. Set the studded "T" posts a maximum of 6 feet on center. Incline the posts toward the runoff source at angle of not more than 20 degrees from vertical. Drive the posts into the ground so that no more than 3 feet protrude above the ground. Attach the fabric to the posts, and place the fabric into the trench and backfill and compact the soil. All splice joints shall overlap a minimum of 18 inches. Erosion control fence shall be installed in accordance with the manufacturer's recommendations

3.4.2.1 Maintenance

The erosion control material shall be maintained until all work on the entire contract or designated portion thereof has been completed and accepted. Maintenance shall consist of the repair of eroded areas and the repair or replacement and restapling of loose or undermined erosion control material, including reseeding.
The Contractor shall remove the silt on the uphill side of the Silt Fence whenever the silt is within 18 inches of the top of the fence. The silt fence shall be removed at the completion of the project.
Silt shall be removed and disposed of as directed by the Contracting Officer. Areas where silt has been removed shall be reseeded and remulched as specified.

3.4.3 Temporary Turf Cover

3.4.3.1 General

When there are contract delays in the turfing operation or a quick cover is required to prevent erosion, the areas designated for turf shall be seeded with a temporary seed as directed by the Contracting Officer.

3.4.3.2 Application

When no other turfing materials have been applied, the quantity of one half of the required soil amendments shall be applied and the area tilled in accordance with paragraph SITE PREPARATION. Seed shall be uniformly broadcast and applied at the rate specified.

3.5 *APPLICATION OF PESTICIDE*\

When necessary to remove a pest or disease, a state-certified applicator shall apply required pesticide in accordance with EPA label restrictions and recommendations. Hydraulic equipment shall be provided for the liquid application of a pesticide with a leak-proof tank, positive agitation methods, controlled application pressure and metering gauges. A pesticide plan shall be provided to the Contracting Officer as stated in paragraph SUBMITTALS. Cost for pesticide application will be paid for under the CHANGES, CONTRACT CLAUSES CONSTRUCTION.

3.6 RESTORATION AND CLEAN UP

3.6.1 Restoration

Existing turf areas, pavements and facilities that have been damaged from the turfing operation shall be restored to original condition at Contractor's expense.

3.6.2 Clean Up

Excess and waste material shall be removed from the planting operation and shall be disposed of off the site. Adjacent paved areas shall be cleaned.

3.7 PROTECTION OF TURFED AREAS

Immediately after mulching operations have been completed, the area shall be protected against traffic or other use by erecting barricades and providing signage as required or as directed by the Contracting Officer to provide protection against traffic and trespass.

3.8 *TURF ESTABLISHMENT PERIOD*\

3.8.1 Commencement

The Turf Establishment Period for establishing a healthy stand of turf shall begin on the first day of work under this contract and shall end 60 days after the last day of mulching operations required by this contract or until all work on this entire Contract has been completed and accepted, whichever period is longer.

3.8.1.1 Satisfactory Stand of Turf

A healthy stand of turf is defined as having a minimum of 100 grass plants per square foot.

The total bare spots shall not exceed 5 percent of the total seeded area. Bare spots shall be no larger than one square foot in size. Weed growth shall be no more than 5% of the plant growth.

3.8.2 Maintenance During Turf Establishment Period

3.8.2.1 General

Maintenance of the turfed areas shall include eradicating weeds, eradicating insects and diseases, protecting embankments and ditches from erosion, maintaining erosion control materials and mulch, protecting turfed areas from traffic, and mowing.

3.8.2.2 Mowing

The Landfill area shall be mowed continually during the maintenence period to a minimum height of 6 inches whenever the growth exceeds 12 inches and as directed to remove weedy plant growth..

3.8.2.3 Repair

The Contractor shall re-establish as specified herein, eroded, damaged or barren areas. Mulch shall also be repaired or replaced as required.

3.8.2.4 *Maintenance Report*\

A written record shall be furnished to the Contracting Officer of the maintenance work performed.

3.9 FINAL ACCEPTANCE

See specification SECTION \=01440=\, CONTRACTOR QUALITY CONTROL, for final inspection and acceptance.

SECTION 02945

WETLAND MITIGATION

INDEX

PART 1 GENERAL
1.1. SUMMARY
1.2. REFERENCES

PART 2 SITE PREPARATION
2.1. GRADING

PART 3 PLANT MATERIALS
3.1. TYPE AND NUMBER
3.2. PLANTING
3.3. PLANT INSPECTION

PART 4 EXECUTION
4.1. NOTIFOCATION
4.2. CONTRACTOR OVERSITE

PART 5 WEEDING
5.1. CONTROL

PART 6 INITIAL MONITORING
6.1. SITE VISITS
6.2. PLANT MORTALITY

SECTION 02945

WETLAND MITIGATION

PART 1. - GENERAL

1.1. SUMMARY

Included in this portion of the Specifications is work involving site preparation, planting, and initial monitoring. Not included in this Specification is work associated with long term monitoring.

1.2. REFERENCES

American Association of Nurserymen, Inc. 1980. American Standard for Nursery Stock. Washington D.C.

PART 2. - SITE PREPARATION

2.1. GRADING

Final grading shall be accomplished in the northeast corner of the North Borrow Area and shall consist of at least two acres of undulating bottom. The bottom shall undulate from the approximate elevation of 753.5 feet to 756.5 feet consisting of an irregularly shaped bottom, shaped into several small peaks and valleys.

Following on-site approval of the final grading, 6 inches of topsoil consisting of at least 3 % organic matter shall be spread over the entire mitigation area.

PART 3. PLANT MATERIALS

3.1. TYPE AND NUMBER

The vegetation to be planted will be Typha angustifolia, Equisetum hymale, Salix interior and Salix nigra. The number of plants required for mitigation will be 300, 300, 200 and 200 respectively. They shall be planted in three separate locations in the mitigation area.

3.2. PLANTING

The Typha and the Equisetum should be planted at separate locations between the approximate elevations of 754 and 756 feet and should be spaced at least 24 inches apart.

The Salix shall be planted in a separate location at an approximate elevation ranging from 756 to 758 feet. Salix cuttings shall be planted on 7 foot centers and placed in a hole augured by hand to a depth of 2 feet. The bottom of the hole shall include the placement of approximately .6 ounces of Osmocote fertilizer. The fertilizer shall contain granular 18-5-11, 12 to 14 month

release properties. The 3 foot cutting shall then be placed in the hole with the buds up and the hole shall then be backfilled with a fine pulverized soil.

The vegetation to be planted may be obtained from on site wetland areas and be transplanted to the mitigation areas once grading has been completed and topsoil placed. On site vegetative borrow shall be limited to the taking of 30% of an established plant colony and shall be done in a manner that does not threaten the integrity of the plant colony. Plants should be excavated selectively as to leave no major portions of the plant colony barren. If it is not possible to borrow from on site sources in this manner and still retain an adequate number of specimens, then off site sources will need to be identified and utilized. If off site sources for wetland vegetation are necessary, these sources must meet the same seasonal requirements for reproduction as the on site vegetation. They must be truly representative of on site vegetation in all respects. The borrow activities and borrow sources for vegetation should be approved and supervised by an Environmental Protection Agency (EPA) biologist or EPA approved biologist. Further more, any methods selected for transplanting vegetation must ensure that the vegetation is alive and in good health at the time of transplanting. If any of the planting locations do not yield at least a 65% success rate at the end of one year following planting activities, they shall be supplemented with a 50% of original replanting activity. The only exception to this may occur if the EPA determines that conditions other than the plants have caused the failure.

Cuttings of Salix should be from dormant to semi-dormant shoots. They shall be 2-3 feet in length and 0.4-0.6 inches in diameter. Cuttings shall be made from relatively unbranched, juvenile shoots (not from flowering shoots). Cuttings shall be stored in water for at least 24 hours, but no more than one week prior to planting. Cuttings not meeting these requirements shall not be accepted. Cuttings shall be planted in the manner described previously.

Plants received in or transplanted in containers shall posses soil/root masses which are thoroughly moist upon delivery to the job site. Any dry and light weight plants shall be rejected. If not planted immediately after being delivered to the job site, containerized plants shall be stored out of direct exposure to sun and wind, and their root masses maintained moist through periodic watering until the time of planting.

Herbaceous plants shall appear healthy with no damage, discoloration, wilting, or evidence of insects.

Woody plants not having an abundance of well developed terminal buds on the leaders and branches will be rejected. Stems and branches shall be turgid and the cambium healthy. Any deciduous woody plants that are in leaf or that have leaflets shall be rejected.

The container sizes shall be at least as large as 1-1.5 inches wide by 8 inches deep. Plants shall not be rejected if supplied in containers larger than specified.

Upon removal of the plants from containers the soil/root masses shall be the size of the specified containers. If the soil/root masses are smaller than the

specified container and loose soil exists at the bottom of the container, the plants shall be rejected.

Containerized plants shall be planted in holes slightly larger than the container the plants arrive in. 3 ounces of the same type osmocote fertilizer shall be placed in the bottom of the hole prior to placement and the plants shall be placed with the crown of the plant a the existing finished grade and backfilled with a fine pulverized soil.

Materials shall not be dropped or dumped from vehicles.

3.3. PLANT INSPECTION

All materials shall be inspected upon arrival to the job site by the EPA selected biologist and the Contracting Officer for conformity to type and quality in accordance with these specifications. Unacceptable materials shall be removed from the jobsite.

PART 4. - EXECUTION

4.1. NOTIFOCATION

The contractor shall notify the Contracting Officer at least 2 weeks prior to the commencement of activities related to the Mitigation Planting.

4.2. CONTRACTOR OVERSITE

Site preparation activities, planting, and initial maintenance shall be coordinated with the beginning of the wet season and continue through the normal growing season. Determination of specific dates for planting activities shall be decided by an EPA biologist or an EPA approved biologist. All plantings shall be made in the "dry" and the use of irrigation shall be required during the period between "dry" and "wet".

No planting shall take place until the aforementioned site has been inspected and approved by the selected EPA biologist and the Contracting Officer.

PART 5. - WEEDING

5.1. CONTROL

Control of invasive plant species shall be conducted as deemed necessary by the Contracting Officer and the EPA selected Biologist. Unless directed otherwise by the concurrence of the Contracting Officer and the EPA selected Biologist, all weeding operations shall be done by hand. Both weed stems and roots shall be removed. All material that results from weeding operations shall be removed from the site daily.

If herbicide use is directed by the Contracting Officer and biologist's concurrence, an application plan shall be submitted and approved prior to application by the Indiana Regional Water Quality Control Board.

PART 6. - INITIAL MONITORING

6.1. SITE VISITS

The mitigation are shall be visited and inspected regularly, upon notification of the Contracting Officer for inspection of all matters necessary to ensure the success of the mitigation plan.

6.2. PLANT MORTALITY

It is the responsibility of the contractor to ensure survivability of the plants (soil moisture, correct handling, appropriate stock, correct planting, approved weed control). If at the end of the first growing season the wetland does not exhibit a 65% survival rate, the contractor shall be required to re-plant 100% of the wetland area unless the EPA directs otherwise.

SECTION 03300A

CONCRETE FOR BUILDING CONSTRUCTION
08/90

INDEX

PART 1 GENERAL
1.1. REFERENCES
1.2. SUBMITTALS
1.3. GENERAL REQUIREMENTS
1.4. DELIVERY AND STORAGE

PART 2 PRODUCTS
2.1. CONCRETE INGREDIENTS
2.2. CURING MATERIALS
2.3. EMBEDDED ITEMS
2.4. FORM MATERIALS
2.5. NOT USED
2.6. NOT USED
2.7. REINFORCEMENT
2.8. NOT USED
2.9. WATER
2.10. PREFORMED EXPANSION JOINT FILLER
2.11. SEALANT
2.12. NOT USED
2.13. DAMP-PACK BEDDING MORTAR

PART 3 EXECUTION
3.1. PREPARATION OF SURFACES
3.2. FORMWORK
3.3. INSTALLATION OF REINFORCEMENT
3.4. NOT USED
3.5. NOT USED
3.6. INSTALLATION OF EMBEDDED ITEMS
3.7. BATCHING, MIXING AND TRANSPORTING CONCRETE
3.8. CONCRETE PLACEMENT
3.9. CONSOLIDATION
3.10. WEATHER LIMITATIONS
3.11. JOINTS
3.12. FINISHING CONCRETE
3.13. CURING AND PROTECTION
3.14. SETTING BASE PLATES AND BEARING PLATES

SECTION 03300A

CONCRETE FOR BUILDING CONSTRUCTION
08/90

PART 1. GENERAL

1.1. REFERENCES

The publications listed below form a part of this specification to the extent referenced. The publications are referred to in the text by basic designation only.

ACI INTERNATIONAL (ACI)

\-ACI 318/318R-\	(1989; Rev 1992; Errata) Building Code Requirements for Reinforced Concrete

AMERICAN SOCIETY FOR TESTING AND MATERIALS (ASTM)

\-ASTM A 615-\	(1994) Deformed and Plain Billet-Steel Bars for Concrete Reinforcement
\-ASTM C 94-\	(1994) Ready-Mixed Concrete
\-ASTM C 309-\	(1993) Liquid Membrane-Forming Compounds for Curing Concrete
\-ASTM C 920-\	(1987) Elastomeric Joint Sealants
\-ASTM D 1751-\	(1983; R 1991) Preformed Expansion Joint Filler for Concrete Paving and Structural Construction (Nonextruding and Resilient Bituminous Types)
\-ASTM D 1752-\	(1984; R 1992) Preformed Sponge Rubber and Cork Expansion Joint Fillers for Concrete Paving and Structural Construction
\-ASTM D 5249-\	(1992) Backer Material for Use With Cold and Hot-Applied Joint Sealants in Portland-Cement Concrete and Asphalt Joints

1.2. SUBMITTALS

Approval is required for submittals with a "GA" designation; submittals having an "FIO" designation are for information only. The following shall be submitted in accordance with Section \=01300=\ SUBMITTAL PROCEDURES:

SD-13 Certificates\

Cementitious Materials\; *GA*\.

Cement, pozzolan, and ground iron blast-furnace slag will be accepted on the basis of manufacturer's certification of compliance, accompanied by mill test reports attesting that the materials meet the requirements of the specification under which it is furnished. No cement, pozzolan, or slag shall be used until notice of acceptance has been given. Cement, pozzolan, and slag may be subjected to check testing from samples obtained at the mill, at transfer points, or at the project site.

1.3. GENERAL REQUIREMENTS

1.3.1. Strength Requirements

Concrete shall have a 28-day compressive strength of 3,000 pounds per square inch. Concrete made with high-early strength cement shall have a 7-day strength equal to the specified 28-day strength for concrete made with Type I or II portland cement.

1.3.2. Air Entrainment

All concrete shall contain from 4 to 7 percent total air.

1.3.3. Special Properties

Concrete may contain other admixtures, such as water reducers, superplasticizers, or set retarding agents to provide special properties to the concrete, if approved.

1.3.4. Slump

Slump shall be within the following limits:

Structural Element	Slump in inches Minimum	Maximum
Foundation walls, substructure walls, footings, pavement, and slabs	1	3
Any structural concrete approved for placement by pumping	None	6

Where use of superplasticizers are approved to produce flowing concrete these slump requirements do not apply.

1.4. DELIVERY AND STORAGE

Material delivered and placed in storage shall be stored off the ground and protected from moisture, dirt, and other contaminants. Sealants shall be

delivered in the manufacturer's original unopened containers. Sealants whose shelf life has expired shall be removed from the site.

PART 2. PRODUCTS

2.1. CONCRETE INGREDIENTS

Concrete shall conform to \-ASTM C 94-\; type optional.

2.2. CURING MATERIALS

Curing materials shall be burlap, impervious sheets, or membrane-forming compounds.

2.3. EMBEDDED ITEMS

Embedded items shall be of the size and type indicated or as needed for the application.

2.4. FORM MATERIALS

Forms for concrete surfaces shall be metal, plywood, or hardboard capable of producing the required surface without adverse effect on the concrete. Form coating shall be nonstaining form oil or form release agent that will not adversely affect the concrete surfaces or impair subsequent applications to the concrete.

2.5. NOT USED
2.6. NOT USED

2.7. REINFORCEMENT

Bar reinforcement shall be deformed Grade 60 billet steel conforming to \-ASTM A 615-\.

2.8. NOT USED

2.9. WATER

Water shall be potable.

2.10. PREFORMED EXPANSION JOINT FILLER

Expansion joint filler shall be preformed material conforming to \-ASTM D 1751-\ or \-ASTM D 1752-\. Unless otherwise indicated, filler material shall be 3/8 inch thick and of a width applicable for the joint formed. Backer material, when required, shall conform to \-ASTM D 5249-\.

2.11. SEALANT

Joint sealant shall conform to \-ASTM C 920-\, Type M for horizontal joints, Class 25, and Use NT. Bond breaker material shall be polyethylene tape, coated

paper, metal foil or similar type materials. The back-up material shall be compressible, non-shrink, nonreactive with sealant, and non-absorptive material type such as extruded butyl or polychloroprene rubber.

2.12. **NOT USED**

2.13. **DAMP-PACK BEDDING MORTAR**

Damp-pack bedding mortar shall consist of 1 part cement and 2-1/2 parts fine aggregate having water content such that a mass of mortar tightly squeezed in the hand will retain its shape but will crumble when disturbed. The space between the top of the concrete and bottom of the bearing plate or base shall be packed with the bedding mortar by tamping or ramming with a bar or rod until it is completely filled.

PART 3. EXECUTION

3.1. **PREPARATION OF SURFACES**

Surfaces to receive concrete shall be clean and free from frost, ice, mud, and water. Surfaces shall be moist but without free water when the concrete is placed. The prepared surface of non frost-susceptible material shall be kept free of foreign matter, waste concrete and/or cement, and debris at all times and shall be thoroughly wetted down sufficiently in advance to insure a firm, moist condition when the concrete is placed. In cold weather the underlying material shall be prepared and so protected that it will be entirely free from frost when the concrete is placed. The use of chemicals to eliminate frost in the underlying material will not be permitted.

3.2. **FORMWORK**

Formwork shall be mortar-tight, properly aligned, and adequately supported to produce concrete conforming accurately to the indicated shapes, lines, dimensions, and with surfaces free of offsets, waviness, or bulges. Where surfaces are to be exposed or painted, panels shall be of uniform sizes, using smaller panels only where required by openings, joints or for closure. Unless otherwise shown, exposed external corners shall be chamfered, beveled or rounded by moldings placed in the forms. Form surfaces shall be thoroughly cleaned and coated before each use. Forms shall be removed at a time and in a manner that will not injure the concrete.

3.3. **INSTALLATION OF REINFORCEMENT**

Reinforcement shall be fabricated to the required shapes. Reinforcement shall be accurately positioned and secured in place.

3.4. **NOT USED**
3.5. **NOT USED**

3.6. INSTALLATION OF EMBEDDED ITEMS

Embedded items shall be free from oil, loose scale or rust, and paint. Embedded items shall be installed at the locations indicated and required to serve the intended purpose. Voids in sleeves, slots and inserts shall be filled with readily removable material to prevent the entry of concrete.

3.7. BATCHING, MIXING AND TRANSPORTING CONCRETE

The work shall conform to \-ACI 318/318R-\ part Construction Requirements, except as otherwise specified.

3.8. CONCRETE PLACEMENT

Concrete shall be handled from mixer to forms in a continuous manner until the approved unit of operation is completed. Adequate scaffolding, ramps and walkways shall be provided so that personnel and equipment are not supported by in-place reinforcement. Placing will not be permitted when the sun, heat, wind, or limitations of facilities furnished by the Contractor prevent proper consolidation, finishing and curing. Concrete shall be deposited as close as possible to its final position in the forms, and there shall be no vertical drop greater than 8 feet except where suitable equipment is provided to prevent segregation and where specifically authorized. Depositing of the concrete shall be so regulated that it will be effectively consolidated in horizontal layers not more than 12 inches thick, except that all slabs shall be placed in a single layer. Concrete to receive other construction shall be screeded to the proper level to avoid excessive shimming or grouting.

3.9. CONSOLIDATION

Immediately after placing, each layer of concrete shall be consolidated by internal vibrators, except for slabs 4 inches or less. The vibrators shall at all times be adequate in effectiveness and number to properly consolidate the concrete; a spare vibrator shall be kept at the jobsite during all concrete placing operations. The vibrators shall have a frequency of not less than 8000 vibrations per minute, and the head diameter and amplitude shall be appropriate for the concrete mixture being placed. Vibrators shall be inserted vertically at uniform spacing over the area of placement. The distance between insertions shall be approximately 1-1/2 times the radius of action of the vibrator so that the area being vibrated will overlap the adjacent just-vibrated area by a few inches. The vibrator shall penetrate rapidly to the bottom of the layer and at least 6 inches into the preceding layer if there is such. Vibrator shall be held stationary until the concrete is consolidated and then withdrawn slowly. The use of form vibrators must be specifically approved. Vibrators shall not be used to transport concrete within the forms. Slabs 4 inches and less in thickness shall be consolidated by properly designed vibrating screeds or other approved technique.

3.10. WEATHER LIMITATIONS

Special protection measures shall be used if freezing temperatures are anticipated before the expiration of the specified curing period. The

temperature of the concrete placed during warm weather shall not exceed 85 degrees F except where an approved retarder is used. The mixing water and/or aggregates shall be cooled, if necessary, to maintain a satisfactory placing temperature. In no case shall the placing temperature exceed 95 degrees F.

3.11. JOINTS

Joints shall be installed at locations indicated and as authorized.

3.11.1. Construction Joints

Construction joints shall be located as indicated or approved.

3.11.2. Expansion Joints

Preformed expansion joint filler shall be used between slabs on grade and vertical surfaces where indicated. The filler shall extend the full slab depth, unless otherwise indicated. The edges of the joint shall be neatly finished with an edging tool of 1/8 inch radius. Where the joint is to receive a sealant, the filler strips shall be installed at the proper level below the finished floor with a slightly tapered, dressed and oiled wood strip temporarily secured to the top thereof to form a recess to the size shown on the drawings. The wood strip shall be removed after the concrete has set. Contractor may opt to use a removable expansion filler cap designed and fabricated for this purpose in lieu of the wood strip. The groove shall be thoroughly cleaned of laitance, curing compound, foreign materials, protrusions of hardened concrete, and any dust which shall be blown out of the groove with oil-free compressed air.

3.11.3. Joint Sealant

Joints in slabs shall be filled with joint sealant, unless otherwise shown. Joint surfaces shall be clean, dry, and free of oil or other foreign material which would adversely affect the bond between sealant and concrete. Joint sealant shall be applied as recommended by the manufacturer of the sealant. Excessed or spilled sealant shall be removed from concrete surfaces and discarded by methods which will not stain or scale the concrete.

3.11.3.1. Joints With Field-Molded Sealant

Joints shall not be sealed when the sealant material, ambient air, or concrete temperature is less than 40 degrees F. Joints requiring a bond breaker shall be coated with curing compound or with bituminous paint. Bond breaker and back-up material shall be installed where required. Joints shall be primed and filled flush with joint sealant in accordance with the manufacturer's recommendations.

3.12. FINISHING CONCRETE

3.12.1. Formed Surfaces

Fins and loose material shall be removed. Unsound concrete, voids over 1/2 inch in diameter shall be cut back to solid concrete, reamed, brush-coated with cement grout, and filled solid with a stiff portland cement and sand mortar mix.

Patchwork shall finish flush with adjoining concrete surfaces in texture and color. Patchwork shall be cured for 72 hours.

3.12.2. Unformed Surfaces

3.12.2.1. NOT USED

3.12.2.2. Float Finish

Slabs to receive a steel trowel finish shall be given a float finish. Screeding shall be followed immediately by darbying or bull floating before bleeding water is present, to bring the surface to a true, even plane. After the concrete has stiffened to permit the operation and the water sheen has disappeared, it shall be wood floated. Concrete that portrays stickiness shall be finished with a magnesium float in lieu of a wood float, and left free of ridges and other projections.

3.12.2.3. Trowel Finish

Slabs shall be given a trowel finish immediately following floating. Surfaces shall be trowelled to produce smooth, dense slabs free from blemishes including trowel marks. In lieu of hand finishing, an approved power finishing machine may be used in accordance with the directions of the machine manufacturer. A final hard steel troweling shall be done by hand.

3.12.2.4. Broom Finish

After floating, slabs shall be lightly trowelled, and then broomed with a fiber-bristle brush in a direction transverse to that of the main traffic.

3.13. CURING AND PROTECTION

3.13.1. General

Immediately after placement, concrete shall be protected from premature drying extremes in temperatures, rapid temperature change, mechanical injury and injury from rain and flowing water. Air and forms in contact with concrete shall be maintained at a temperature above 50 degrees F for the first 3 days and at a temperature above 32 degrees F for the remainder of the specified curing period.

3.13.2. Moist Curing

Concrete to be moist-cured shall be maintained continuously wet for the entire curing period. If water or curing materials used stains or discolors concrete surfaces which are to be permanently exposed, the concrete surfaces shall be cleaned. When wooden forms are left in place during curing, they shall be kept wet at all times. If the forms are removed before the end of the curing period, curing shall be carried out as on unformed surfaces, using suitable materials. Horizontal surfaces shall be cured by ponding, by covering with a 2 inch minimum thickness of continuously saturated sand, or by covering with waterproof paper, polyethylene sheet, polyethylene-coated burlap or saturated burlap.

3.13.3. Membrane Curing

Membrane curing shall not be used on surfaces that are to receive any subsequent treatment depending on adhesion or bonding to the concrete; except a styrene acrylate or chlorinated rubber compound meeting \-ASTM C 309-\, Class B requirements may be used for surfaces which are to be painted or are to receive bituminous roofing or waterproofing, or floors that are to receive adhesive applications of resilient flooring. The curing compound selected shall be compatible with any subsequent paint, roofing, waterproofing or flooring specified. Membrane curing compound shall not be used on surfaces that are maintained at curing temperatures with free steam. Curing compound shall be applied to formed surfaces immediately after the forms are removed and prior to any patching or other surface treatment except the cleaning of loose sand, mortar, and debris from the surface. Surfaces shall be thoroughly moistened with water and the curing compound shall be applied to slab surfaces as soon as the bleeding water has disappeared, with the tops of joints being temporarily sealed to prevent entry of the compound and to prevent moisture loss during the curing period. Compound shall be applied in a one-coat continuous operation by mechanical spraying equipment, at a uniform coverage in accordance with the manufacturer's printed instructions. Concrete surfaces which have been subjected to rainfall within 3 hours after curing compound has been applied shall be resprayed by the method and at the coverage specified. On surfaces permanently exposed to view, the surface shall be shaded from direct rays of the sun for the duration of the curing period. Surfaces coated with curing compound shall be kept free of foot and vehicular traffic, and from other sources of abrasion and contamination during the curing period.

3.14. SETTING BASE PLATES AND BEARING PLATES

After being properly positioned, column base plates, bearing plates for beams and similar structural members, and machinery and equipment base plates shall be set to the proper line and elevation with damp-pack bedding mortar. The thickness of the mortar or grout shall be approximately 1/24 the width of the plate, but not less than 3/4 inch. Concrete and metal surfaces in contact with mortar shall be clean and free of oil and grease, and shall be damp and free of laitance when mortar is placed.

SECTION 05120

STRUCTURAL STEEL

INDEX

PART 1 GENERAL
- 1.1. REFERENCES
- 1.2. GENERAL REQUIREMENTS
- 1.3. SUBMITTALS
- 1.4. STORAGE

PART 2 PRODUCTS
- 2.1. STRUCTURAL STEEL SYSTEMS
- 2.2. NOT USED
- 2.3. STEEL PIPE
- 2.4. HIGH-STRENGTH BOLTS
- 2.5. CARBON STEEL BOLTS
- 2.6. CARBON STEEL NUTS
- 2.7. WASHERS
- 2.8. NOT USED
- 2.9. NOT USED
- 2.10. SHOP PAINT
- 2.11. PIPE GUARDS

PART 3 EXECUTION
- 3.1. FABRICATION
- 3.2. ERECTION

SECTION 05120

STRUCTURAL STEEL

PART 1. GENERAL

1.1. REFERENCES

The publications listed below form a part of this specification to the extent referenced. The publications are referred to in the text by basic designation only.

AMERICAN INSTITUTE OF STEEL CONSTRUCTION (AISC)

\-AISC ASD SPEC-\	(1989) Specification for Structural Steel Buildings - Allowable Stress Design, Plastic Design
\-AISC ASD BOLT SPEC-\	(1985) Allowable Stress-Design Specification for Structural Joints Using ASTM A325 or ASTM A490 Bolts
\-AISC CODE-\	(1992) Code of Standard Practice - For Steel Buildings and Bridges

AMERICAN SOCIETY FOR TESTING AND MATERIALS (ASTM)

\-ASTM A 36-\	(1993b) Structural Steel
\-ASTM A 53-\	(1993) Pipe, Steel, Black and Hot-Dipped, Zinc-Coated Welded and Seamless
\-ASTM A 307-\	(1993a) Carbon Steel Bolts and Studs, 60,000 psi, Tensile Strength
\-ASTM A 325-\	(1993) Structural Bolts, Steel, Heat Treated, 120/105 ksi Minimum Tensile Strength
\-ASTM A 563-\	(1993) Carbon and Alloy Steel Nuts
\-ASTM F 844-\	(1990) Washers, Steel, Plain (Flat), Unhardened for General Use

AMERICAN WELDING SOCIETY (AWS)

\-AWS A2.4-\	(1993) Symbols for Welding, Brazing, and Nondestructive Examination

\-AWS D1.1-\ (1994) Structural Welding Code - Steel

1.2. GENERAL REQUIREMENTS

Structural steel fabrication and erection shall be performed by an organization experienced in structural steel work of equivalent magnitude. The Contractor shall be responsible for correctness of detailing, fabrication, and for the correct fitting of structural members. Substitution of sections or modification of connection details will not be accepted unless approved. The \-AISC ASD SPEC-\ shall govern the work. Welding shall be in accordance with \-AWS D1.1-\. High-strength bolting shall be in accordance with the \-AISC ASD BOLT SPEC-\.

1.3. SUBMITTALS

Approval is required for submittals with a "GA" designation; submittals having an "FIO" designation are for information only. The following shall be submitted in accordance with Section \=01300=\ SUBMITTAL PROCEDURES:

SD-04 Drawings\

Structural Steel Systems\; *GA*\ (For review and approval by a licensed Structural Engineer)

Structural Connections\; *GA*\ (For review and approval by a licensed Structural Engineer)

Detail drawings shall include all shop and erection details. Members and connections for any portion of the structure not shown on the contract drawings shall be detailed by the fabricator and indicated on the detail drawings. All welds shall be indicated by standard welding symbols of the \-AWS A2.4-\.

SD-08 Statements\

Erection\; *FIO*\.

Prior to erection, an erection plan of the structural steel framing is required. This erection plan shall conform to the requirements of the \-AISC CODE-\. The erection plan shall describe all necessary temporary supports, including the sequence of installation and removal.

SD-13 Certificates\

Materials and Welders\; *FIO*\.

Fabrication\; *FIO*\.

Shop Paint\; *FIO*\

Certified copies of mill test reports for structural steel, structural bolts, nuts, washers and other related structural steel items. Certified copies of welders qualification test records showing qualification in accordance with \-

AWS D1.1-\. Certificate stating that shop paint is free of lead and/or chromates.

1.4. **STORAGE**

Material shall be stored out of contact with the ground in such manner and location as will minimize deterioration.

PART 2. PRODUCTS

2.1. ***STRUCTURAL STEEL SYSTEMS***

2.1.1. **Carbon Grade Steel**

Carbon grade steel shall conform to \-ASTM A 36-\.

2.1.2. **NOT USED**

2.2. **NOT USED**

2.3. **STEEL PIPE**

Steel pipe shall conform to \-ASTM A 53-\, Type E or S, Grade B.

2.4. **HIGH-STRENGTH BOLTS**

High-strength bolts shall conform to \-ASTM A 325-\, unless otherwise indicated, nuts and washers for high strength bolts shall be as specified in \-ASTM A 325-\. Bolts, nuts, and washers shall be hot dip galvanized.

2.5. **CARBON STEEL BOLTS**

Anchor bolts shall be carbon steel bolts shall conform to \-ASTM A 307-\, Grade A, and shall be hot dip galvanized.

2.6. **CARBON STEEL NUTS**

Carbon steel nuts shall conform to \-ASTM A 563-\, Grade A, Hex Style.

2.7. **WASHERS**

Plain washers shall conform to \-ASTM F 844-\.

2.8. **NOT USED**
2.9. **NOT USED**

2.10. **SHOP PAINT**

Shop paint shall be the fabricator's standard paint which shall be free of lead and/or chromates.

2.11. PIPE GUARDS

Pipe guards shall be heavy duty steel pipe conforming to \-ASTM A 53-\, Type E or S, weight STD, black finish.

PART 3. EXECUTION

3.1. *FABRICATION*\

Fabrication shall be in accordance with the applicable provisions of the \-AISC ASD SPEC-\. Fabrication and assembly shall be done in the shop to the greatest extent possible. Structural steelwork, except surfaces of steel to be field welded, shall be prepared for painting in accordance with the \-AISC ASD SPEC-\ and primed with shop paint.

3.2. *ERECTION*\

Erection of structural steel shall be in accordance with the applicable provisions of the \-AISC ASD SPEC-\ and \-AISC CODE-\.

3.2.1. Connections

Anchor bolts and other connections between the structural steel and foundations shall be provided and shall be properly located and built into connecting work.

3.2.2. Base Plates and Bearing Plates

Column base plates for columns and bearing plates for joists and joist girders shall be provided. Base plates and bearing plates shall be provided with full bearing after the supported members have been plumbed and properly positioned, but prior to placing superimposed loads. Separate setting plates under column base plates will not be permitted. The area under each plate shall be packed solidly with damp-pack bedding mortar as specified in Section \=03300A=\ CONCRETE FOR BUILDING CONSTRUCTION.

3.2.3. Field Welded Connections

Field welded structural connections shall be completed before load is applied.

3.2.4. Field Priming

After erection, the field bolt heads and nuts, field welds, and any abrasions in the shop paint shall be cleaned and primed with paint of the same quality as that used for the shop paint.

SECTION 05210

STEEL JOISTS
11/88

INDEX

PART 1 GENERAL
- 1.1. REFERENCES
- 1.2. SUBMITTALS
- 1.3. DESCRIPTION
- 1.4. DELIVERY AND STORAGE

PART 2 PRODUCTS
- 2.1. NOT USED
- 2.2. LONGSPAN STEEL JOISTS
- 2.3. JOIST GIRDERS
- 2.4. ACCESSORIES AND FITTINGS
- 2.5. SHOP PAINTING

PART 3 EXECUTION
- 3.1. ERECTION
- 3.2. NOT USED

SECTION 05210

STEEL JOISTS
11/88

PART 1. GENERAL

1.1. **REFERENCES**

The publications listed below form a part of this specification to the extent referenced. The publications are referred to in the text by basic designation only.

STEEL JOIST INSTITUTE (SJI)

\-SJI-01-\ (1994) Standard Specifications Load Tables and Weight Tables for Steel Joists and Joist Girders

1.2. **SUBMITTALS**

Approval is required for submittals with a "GA" designation; submittals having an "FIO" designation are for information only. The following shall be submitted in accordance with Section \-01300-\ SUBMITTAL PROCEDURES:

SD-04 Drawings\

Steel Joists\; *GA*\ (For review and approval by a licensed Structural Engineer)

Detail drawings shall include fabrication and erection details, specifications for shop painting, and identification markings of joists and joist girders.

SD-13 Certificates\

Steel Joists\; *GA*\ (For review and approval by a licensed Structural Engineer)

Certificates stating that the steel joists and joist girders have been designed and manufactured in accordance with \-SJI-01-\. Complete engineering design computations may be submitted in lieu of the certification.

1.3. **DESCRIPTION**

Steel joists and joist girders are designated on the drawings in accordance with the standard designations of the Steel Joist Institute. Joists of other standard designations or joists with properties other than those shown may be substituted for the joists designated provided the structural properties are equal to or greater than those of the joists shown and provided all other specified requirements are met.

1.4. DELIVERY AND STORAGE

Materials shall be delivered to the site in undamaged condition and stored off the ground in a well drained location, protected from damage, and easily accessible for inspection and handling.

PART 2. PRODUCTS

2.1. NOT USED

2.2. LONGSPAN STEEL JOISTS

Longspan steel joists shall conform to \-SJI-01-\, LH-Series. Joists designated LH-SP shall be designed by the Contractor to support the loads indicated on the drawings.

2.3. JOIST GIRDERS

Joist girders shall conform to \-SJI-01-\. Joist girders shall be designed by the Contractor to support the loads indicated on the drawings.

2.4. ACCESSORIES AND FITTINGS

Accessories and fittings, including end supports and bridging, shall be in accordance with the standard specifications under which the members were designed.

2.5. SHOP PAINTING

Joists, joist girders and accessories shall be shop painted with a rust-inhibiting primer paint. For joists and joist girders which will be finish painted under Section \=09900=\ PAINTING, GENERAL, the primer paint shall be limited to a primer which is compatible with the specified finish paint.

PART 3. EXECUTION

3.1. ERECTION

Installation of joists and joist girders shall be in accordance with the standard specification under which the member was produced. Joists and joist girders shall be handled in a manner to avoid damage. Damaged joists and joist girders shall be removed from the site, except when field repair is approved and such repairs are satisfactorily made in accordance with the manufacturer's recommendations. Joists and joist girders shall be accurately set, and end anchorage shall be in accordance with the standard specification under which the joists and joist girders were produced. Joist bridging and anchoring shall be secured in place prior to the application of any construction loads. Any temporary loads shall be distributed so that the carrying capacity of any joist is not exceeded. Loads shall not be applied to bridging during construction or in the completed work. Abraded, corroded, and field welded areas shall be cleaned and touched up with the same type of paint used in the shop painting.

3.2. NOT USED

SECTION 05300

STEEL DECKING
10/89

INDEX

PART 1 GENERAL
1.1. REFERENCES
1.2. SUBMITTALS
1.3. DELIVERY, STORAGE, AND HANDLING

PART 2 PRODUCTS
2.1. DECK UNITS
2.2. TOUCH-UP PAINT
2.3. NOT USED
2.4. NOT USED
2.5. ACCESSORIES

PART 3 EXECUTION
3.1. ERECTION
3.2. NOT USED
3.3. ATTACHMENTS
3.4. HOLES AND OPENINGS

SECTION 05300

STEEL DECKING
10/89

PART 1. GENERAL

1.1. REFERENCES

The publications listed below form a part of this specification to the extent referenced. The publications are referred to in the text by basic designation only.

AMERICAN IRON AND STEEL INSTITUTE (AISI)

\-AISI-01-\	(1986; Addenda 1989) Cold-Formed Steel Design Manual

AMERICAN SOCIETY FOR TESTING AND MATERIALS (ASTM)

\-ASTM A 446-\	(1993) Steel Sheet, Zinc-Coated (Galvanized) by the Hot-Dip Process, Structural (Physical) Quality
\-ASTM A 611-\	(1994) Steel, Sheet, Carbon, Cold-Rolled, Structural Quality
\-ASTM A 780-\	(1993a) Repair of Damaged and Uncoated Areas of Hot-Dipped Galvanized Coatings

AMERICAN WELDING SOCIETY (AWS)

\-AWS D1.1-\	(1994) Structural Welding Code - Steel
\-AWS D1.3-\	(1989) Structural Welding Code - Sheet Steel

STEEL DECK INSTITUTE (SDI)

\-SDI-02-\	(1987; Amended 1991) Diaphragm Design Manual
\-SDI Pub No 28-\	(1992) Design Manual for Composite Decks, Form Decks, Roof Decks, and Cellular Metal Floor Deck with Electrical Distribution

STEEL STRUCTURES PAINTING COUNCIL (SSPC)

\-SSPC Paint 20-\	(1991) Zinc-Rich Primers (Type I - Inorganic and Type II - Organic)

1.2. SUBMITTALS

Approval is required for submittals with a "GA" designation; submittals having an "FIO" designation are for information only. The following shall be submitted in accordance with Section \=01300=\ SUBMITTAL PROCEDURES:

SD-01 Data\

Deck Units\; *GA*\ (For review and approval by a licensed Structural Engineer)

Design computations for the structural properties of the deck units or SDI certification that the units are designed in accordance with SDI specifications.

SD-04 Drawings\

Deck Units\; *GA*\ (For review and approval by a licensed Structural Engineer)

Attachments\; *GA*\ (For review and approval by a licensed Structural Engineer)

Drawings shall include type, configuration, structural properties, location, and necessary details of deck units, accessories, and supporting members; size and location of holes to be cut and reinforcement to be provided; location and sequence of welded or fastener connections; and the manufacturer's erection instructions.

SD-13 Certificates\

Deck Units\; *GA*\.

Attachments\; *GA*\.

Manufacturer's certificates attesting that the decking material meets the specified requirements. Manufacturer's certificate attesting that the operators are authorized to use the low-velocity piston tool.

SD-18 Statements\

Attachments\; *GA*\.

Prior to welding operations, copies of qualified procedures and lists of names and identification symbols of qualified welders and welding operators.

1.3. DELIVERY, STORAGE, AND HANDLING

Deck units shall be delivered to the site in a dry and undamaged condition, stored off the ground with one end elevated, and stored under a weathertight covering permitting good air circulation. Finish of deck units shall be maintained at all times by using touch-up paint whenever necessary to prevent the formation of rust.

PART 2. PRODUCTS

2.1. *DECK UNITS*\

Deck units shall conform to \-SDI Pub No 28-\. Panels of maximum possible lengths shall be used to minimize end laps. Fabricate deck units in lengths to span 3 or more supports with flush, telescoped, or nested 2 inch laps at ends, and interlocking, or nested side laps, unless otherwise indicated. Deck with cross-sectional configuration differing from the units indicated may be used, provided that the properties of the proposed units, determined in accordance with \-AISI-01-\, are equal to or greater than the properties of the units indicated and that the material will fit the space provided without requiring revisions to adjacent materials or systems.

2.1.1. Roof Deck

Steel roof deck shall conform to \-ASTM A 446-\ or, \-ASTM A 611-\ . Roof deck units shall be fabricated of the steel design thickness required by the design drawings and shall be painted with an epoxy coating or equivalent applied to prime-coating in accordance with manufacturer's standard .

2.1.2. NOT USED

2.2. TOUCH-UP PAINT

Touch-up paint for shop-painted units shall be of the same type used for the shop painting. Welds shall be touched-up with paint conforming to \-SSPC Paint 20-\ in accordance with \-ASTM A 780-\. Finish of deck units and accessories shall be maintained by using touch-up paint whenever necessary to prevent the formation of rust.

2.3. NOT USED

2.4. NOT USED

2.5. ACCESSORIES

The manufacturer's standard accessories shall be furnished as necessary to complete the deck installation. Metal accessories shall be of the same material as the deck and have minimum design thickness as follows: saddles, 0.0474 inch; welding washers, 0.0598 inch; cant strip, 0.0295 inch; other metal accessories, 0.0358 inch; unless otherwise indicated. Accessories shall include but not be limited to saddles, welding washers, cant strips, butt cover plates, underlapping sleeves, and ridge and valley plates.

PART 3. EXECUTION

3.1. ERECTION

Erection of deck and accessories shall be in accordance with \-SDI-02-\ and the approved detail drawings. Damaged deck and accessories including material which is permanently stained or contaminated, with burned holes or deformed shall not be installed. The deck units shall be placed on secure supports, properly adjusted, and aligned at right angles to supports before being permanently secured in place. The deck shall not be used for storage or as a working platform until the units have been secured in position. Loads shall be distributed by appropriate means to prevent damage during construction and to the completed assembly. The maximum uniform distributed storage load shall not exceed the design live load. There shall be no loads suspended directly from the steel deck.

3.2. NOT USED

3.3. *ATTACHMENTS*

All fasteners shall be installed in accordance with the manufacturer's recommended procedure, except as otherwise specified. The deck units shall be welded with nominal 5/8 inch diameter puddle welds or fastened with screws, powder-actuated fasteners or pneumatically driven fasteners to supports as indicated on the design drawings and in accordance with requirements of \-SDI Pub No 28-\. All welding of steel deck shall be in accordance with \-AWS D1.3-\ using methods and electrodes as recommended by the manufacturer of the steel deck being used. Welds shall be made only by operators previously qualified by tests prescribed in \-AWS D1.3-\ to perform the type of work required. Welding washers shall not be used at the connections of the deck to supports. Holes and similar defects will not be acceptable. Deck ends shall be lapped 2 inches . All partial or segments of deck units shall be attached to structural supports in accordance with Section 2.5 of \-SDI-02-\. Powder-actuated fasteners shall be driven with a low-velocity piston tool by an operator authorized by the manufacturer of the piston tool. Pneumatically driven fasteners shall be driven with a low-velocity fastening tool and shall comply with the manufacturer's recommendations.

3.4. HOLES AND OPENINGS

All holes and openings required shall be coordinated with the drawings, specifications, and other trades. Holes and openings shall be drilled or cut, reinforced and framed as indicated on the drawings or described in the specifications and as required for rigidity and load capacity. Holes and openings less than 6 inches across require no reinforcement. Holes and openings 6 to 12 inches across shall be reinforced by 0.0474 inch thick steel sheet at least 12 inches wider and longer than the opening and be fastened to the steel deck at each corner of the sheet and at a maximum of 6 inches on center. Holes and openings larger than 12 inches shall be reinforced by steel angles installed perpendicular to the steel joists and supported by the adjacent steel joists. Steel angles shall be installed perpendicular to the deck ribs and shall be fastened to the angles perpendicular to the steel joists. Openings must not interfere with seismic members such as chords and drag struts.

SECTION 07413

METAL ROOFING
10/91

INDEX

PART 1 GENERAL
1.1. REFERENCES
1.2. DESIGN REQUIREMENTS
1.3. SUBMITTALS
1.4. DELIVERY AND STORAGE

PART 2 PRODUCTS
2.1. ROOF PANELS
2.2. FACTORY COLOR FINISH
2.3. ACCESSORIES
2.4. FASTENERS
2.5. NOT USED
2.6. NOT USED
2.7. NOT USED
2.8. SEALANT
2.9. GASKETS AND INSULATING COMPOUNDS

PART 3 EXECUTION
3.1. INSTALLATION

SECTION 07413

METAL ROOFING
10/91

PART 1. GENERAL

1.1. **REFERENCES**

The publications listed below form a part of this specification to the extent referenced. The publications are referred to in the text by basic designation only.

AMERICAN IRON AND STEEL INSTITUTE (AISI)

\-AISI SG-673-\	(1987) Cold-Formed Steel Design Manual

AMERICAN SOCIETY FOR TESTING AND MATERIALS (ASTM)

\-ASTM A 446-\	(1993) Steel Sheet, Zinc-Coated (Galvanized) by the Hot-Dip Process, Structural (Physical) Quality
\-ASTM B 117-\	(1994) Operating Salt Spray (Fog) Testing Apparatus
\-ASTM D 522-\	(1993a) Mandrel Bend Test of Attached Organic Coatings
\-ASTM D 714-\	(1987; R 1994) Evaluating Degree of Blistering of Paints
\-ASTM D 968-\	(1993) Abrasion Resistance of Organic Coatings by Falling Abrasive
\-ASTM D 1308-\	(1987; R 1993) Effect of Household Chemicals on Clear and Pigmented Organic Finishes
\-ASTM D 1654-\	(1992) Evaluation of Painted or Coated Specimens Subjected to Corrosive Environments
\-ASTM D 2244-\	(1993) Calculation of Color Differences from Instrumentally Measured Color Coordinates
\-ASTM D 2247-\	(1994) Testing Water Resistance of Coatings in 100% Relative Humidity
\-ASTM D 2794-\	(1993) Resistance of Organic Coatings to the Effects of Rapid Deformation (Impact)

\-ASTM D 3359-\	(1995) Measuring Adhesion by Tape Test
\-ASTM D 4214-\	(1989) Evaluating the Degree of Chalking of Exterior Paint Films
\-ASTM E 96-\	(1994) Water Vapor Transmission of Materials
\-ASTM G 23-\	(1995) Operating Light-Exposure Apparatus (Carbon-Arc Type) With and Without Water for Exposure of Nonmetallic Materials

UNDERWRITERS LABORATORIES (UL)

\-UL 580-\	(1994; Rev thru Apr 1995) Tests for Uplift Resistance of Roof Assemblies

1.2. DESIGN REQUIREMENTS

Contract drawings indicate the design loads and the extent and general assembly details of the metal roofing . Members and connections not indicated on the drawings shall be designed by the Contractor. Roofing panels, components, transitions, and assemblies shall be the products of the same manufacturer. Roofing will be designed to resist the wind uplift loads shown, with an allowable deflection under design load of L/180. Steel covering design, including section modulus and moment of inertia determinations, will be in accordance with \-AISI SG-673-\.

1.3. SUBMITTALS

Approval is required for submittals with a "GA" designation; submittals having an "FIO" designation are for information only. The following shall be submitted in accordance with Section \=01300=\ SUBMITTAL PROCEDURES:

SD-04 Drawings\

Metal Roofing\; *GA*\ (For review and approval by a licensed Structural Engineer)

Drawings consisting of catalog cuts, design and erection drawings, shop coating and finishing specifications, and other data as necessary to clearly describe design, materials, sizes, layouts, construction details, fasteners, and erection. Drawings shall be accompanied by engineering design calculations for the structural properties of roofing units.

SD-13 Certificates\

Roof Panels\; *GA*\.

Installation\; *GA*\.

Accessories\; *GA*\.

Certificates attesting that the panels and accessories conform to the requirements specified. Certificate for the roof assembly shall certify that the assembly complies with the material and fabrication requirements specified and is suitable for the installation at the indicated design slope. Certified laboratory test reports showing that the sheets to be furnished are produced under a continuing quality control program and that a representative sample consisting of not less than 5 pieces has been tested and has met the quality standards specified for factory color finish.

Mill certification for structural bolts, roof covering panels.

SD-14 Samples\

Accessories\; *FIO*\.

One sample of each type of flashing, trim, closure, cap and similar items. Size shall be sufficient to show construction and configuration.

1.4. DELIVERY AND STORAGE

Materials shall be delivered to the site in a dry and undamaged condition and stored out of contact with the ground. Materials shall be covered with weathertight coverings and kept dry. Storage accommodations for roof and wall covering shall provide good air circulation and protection from surface staining.

PART 2. PRODUCTS

2.1. *ROOF PANELS*\

Panels shall be steel and shall have a factory color finish. Length of sheets shall be sufficient to cover the entire length of any unbroken roof slope when length of run is 30 feet or less. When length of run exceeds 30 feet, each sheet in the run shall extend over two or more spans. Sheets longer than 30 feet may be furnished if approved by the Contracting Officer. Width of sheets with overlapping configurations shall provide not less than 24 inches of coverage in place , and those with interlocking ribs shall provide not less than 12 inches of coverage in place. Design provisions shall be made for thermal expansion and contraction consistent with the type of system to be used. All sheets shall be either square-cut or miter-cut except that gable end wall sheets may be cut in the shop to correspond to the roof slope and may have a horizontal joint at the eave line.

2.1.1. Roof Panels

Roof panels shall have configurations for overlapping sheets. Roof deck assemblies shall be Class 90 as defined in \-UL 580-\. System for securing the roof covering to structural framing members shall be exposed, penetrating fastener type. Height of corrugation at overlap of adjacent roof sheets shall be the building manufacturer's standard for the indicated roof slope .

2.1.2. NOT USED

2.1.3. Steel Panels

Zinc-coated steel conforming to \-ASTM A 446-\, G 90 coating designation. Roof panels shall be 0.024 inch thick minimum. Prior to shipment, mill finish panels shall be treated with a passivating chemical and oiled to inhibit the formation of oxide corrosion products. Panels that have become wet during shipment but have not started to oxidize shall be dried, retreated, and re-oiled.

2.2. FACTORY COLOR FINISH

Roof panels shall have a factory applied polyvinylidene fluoride finish on the exposed side. The exterior finish shall consist of a baked-on fluoropolymer enamel topcoat with an appropriate prime coat. Color shall match the color indicated on the drawings . The exterior coating shall be a nominal 2 mil thickness consisting of a polyvinylidene fluoride topcoat of not less than 0.7 mil dry film thickness and the paint manufacturer's recommended primer of not less than 1.0 mil thickness. The interior color finish shall consist of the same coating and dry film thickness as the exterior The exterior color finish shall meet the test requirements specified below.

2.2.1. Salt Spray Test

A sample of the sheets shall withstand a salt spray test for a minimum of 1000 hours in accordance with \-ASTM B 117-\, including the scribe requirement in the test. Immediately upon removal of the panel from the test, the coating shall receive a rating of not less than 8F, few no. 8 blisters, 8, 1/32 inch failure at scribe, as determined by \-ASTM D 1654-\.

2.2.2. Formability Test

When subjected to testing in accordance with \-ASTM D 522-\, the coating film shall show no evidence of fracturing to the naked eye.

2.2.3. Accelerated Weathering, Chalking Resistance and Color Change

A sample of the sheets shall be tested for a minimum of 1000 hours in accordance with \-ASTM G 23-\, Method 2, using a Type EH apparatus with cycles of 60 minutes radiation and 60 minutes condensing humidity. The coating shall withstand the weathering test without cracking, peeling, blistering, loss of adhesion of the protective coating, or corrosion of the base metal. Protective coating that can be readily removed from the base metal with tape in accordance with \-ASTM D 3359-\, Test Method B, shall be considered as an area indicating loss of adhesion. Following the accelerated weathering test, the coating shall have a chalk rating not less than No. 8 in accordance with \-ASTM D 4214-\ test procedures, and the color change shall not exceed 5 CIE or Hunter Lab color difference (delta E) units in accordance with \-ASTM D 2244-\. For sheets required to have a low gloss finish, the chalk rating shall be not less than No. 6 and the color difference shall be not greater than 7 units.

2.2.4. Humidity Test

When subjected to a humidity cabinet test in accordance with \-ASTM D 2247-\ for 1000 hours, a scored panel shall show no signs of blistering, cracking, creepage or corrosion.

2.2.5. Impact Resistance

Factory-painted sheet shall withstand direct and reverse impact in accordance with \-ASTM D 2794-\ equal to 1.5 times metal thickness in mils expressed in inch-pounds, with no loss of adhesion.

2.2.6. Abrasion Resistance Test

When subjected to the falling sand test in accordance with \-ASTM D 968-\ the coating system shall withstand a minimum of 50 liters of sand before the appearance of the base metal. The term "appearance of base metal" refers to the metallic coating on steel or the base metal.

2.2.7. NOT USED

2.2.8. Pollution Resistance

Coating shall show no visual effects when immersion tested in a 10 percent hydrochloric acid solution for 24 hours in accordance with \-ASTM D 1308-\.

2.3. *ACCESSORIES*\

Accessories shall be compatible with the covering furnished. Flashing, trim, metal closure strips, caps, and similar metal accessories shall be not less than the minimum thicknesses specified for covering. Exposed metal accessories shall be finished to match the panels furnished. Molded closure strips shall be bituminous-saturated fiber, closed-cell or solid-cell synthetic rubber or neoprene, or polyvinyl chloride premolded to match configuration of the covering and shall not absorb or retain water.

2.4. FASTENERS

Fasteners for steel roof panels shall be zinc-coated steel, corrosion resisting steel, or nylon capped steel, type and size specified below or as otherwise approved for the applicable requirements. Fasteners for structural connections shall provide both tensile and shear strength of not less than 750 lbs per fastener. Fasteners for accessories shall be the manufacturer's standard. Exposed roof fasteners shall be gasketed or have gasketed washers on the exterior side of the covering to waterproof the fastener penetration. Washer material shall be compatible with the covering; have a minimum diameter of 3/8 inch for structural connections; and gasketed portion of fasteners or washers shall be neoprene or other equally durable elastomeric material approximately 1/8-inch thick.

2.4.1. **Screws**

Screws shall be as recommended by the manufacturer to meet the strength design requirements of the panels.

2.4.2. **End-Welded Studs**

Automatic end-welded studs shall be shouldered type with a shank diameter of not less than 3/16 inch and cap or nut for holding covering against the shoulder.

2.4.3. **NOT USED**

2.4.4. **Blind Rivets**

Blind rivets shall be stainless steel with 1/8 inch nominal diameter shank. Rivets shall be threaded stem type if used for other than the fastening of trim. Rivets with hollow stems shall have closed ends.

2.4.5. **Bolts**

Bolts shall be not less than 1/4 inch diameter, shouldered or plain shank as required, with proper nuts.

2.5. **NOT USED**
2.6. **NOT USED**
2.7. **NOT USED**

2.8. **SEALANT**

Sealant shall be an elastomeric type containing no oil or asphalt. Exposed sealant shall be clear and shall cure to a rubberlike consistency. Concealed sealant may be the nonhardening type.

2.9. **GASKETS AND INSULATING COMPOUNDS**

Gaskets and insulating compounds shall be nonabsorptive and suitable for insulating contact points of incompatible materials. Insulating compounds shall be nonrunning after drying.

PART 3. EXECUTION

3.1. ***INSTALLATION***

Installation shall be as specified and in accordance with the approved erection instructions and drawings to produce a weather tight structure. Dissimilar materials which are not compatible when contacting each other shall be insulated from each other by means of gaskets or insulating compounds. Improper or mislocated drill holes shall be plugged with an oversize screw fastener and gasketed washer; however, sheets with an excess of such holes or with such holes in critical locations shall not be used. Exposed surfaces and edges shall be kept clean and free from sealant, metal cuttings, hazardous burrs, and other

foreign material. Stained, discolored, or damaged sheets shall be removed from the site.

3.1.1. Roof Covering

Roof covering shall be applied with the longitudinal configurations in the direction of the roof slope. Accessories shall be fastened into framing members, except as otherwise approved. Closure strips shall be provided as indicated and where necessary to provide weathertight construction.

3.1.1.1. Lap Type Panels with Exposed Fasteners

Where possible, end laps shall be made over framing members with fasteners into framing members approximately 2 inches from the end of the overlapping sheet. Side laps shall be laid away from the prevailing winds. Side and end lap distances, joint sealing, and fastening and spacing of fasteners shall be in accordance with manufacturer's standard practice insofar as the maximum spacings specified are not exceeded and provided such standard practice will result in a structure which will be free from water leaks and meet design requirements. Spacing of fasteners shall present an orderly appearance and shall not exceed: 8 inches on center at end laps of covering, 8 inches on center at connection of covering to intermediate supports, 12 inches on center at side laps of roof coverings . Side laps and end laps of roof covering and joints at accessories shall be sealed. Fasteners shall be installed in straight lines within a tolerance on 1/2 inch in the length of a bay. Fasteners shall be driven normal to the surface and to a uniform depth to seat the gasketed washers properly.

3.1.1.2. NOT USED

3.1.2. NOT USED

SECTION 09900

PAINTING, GENERAL

INDEX

PART 1 GENERAL
1.1 REFERENCES
1.2 SUBMITTALS
1.3 PACKAGING, LABELING, AND STORING
1.4 APPROVAL OF MATERIALS
1.5 ENVIRONMENTAL CONDITIONS

PART 2 PRODUCTS
2.1 PAINT

PART 3 EXECUTION
3.1 PROTECTION OF AREAS NOT TO BE PAINTED
3.2 SURFACE PREPARATION
3.3 MIXING AND THINNING
3.4 APPLICATION
3.5 NOT USED
3.6 NOT USED
3.7 SURFACES TO BE PAINTED
3.8 NOT USED
3.9 CLEANING
3.10 PAINTING SCHEDULES

SECTION 09900

PAINTING, GENERAL

PART 1 GENERAL

1.1 REFERENCES

The publications listed below form a part of this specification to the extent referenced. The publications are referred to in the text by basic designation only.

AMERICAN CONFERENCE OF GOVERNMENTAL INDUSTRIAL HYGIENISTS (ACGIH)

\-ACGIH-02-\	(1991) 1991-1992 Threshold Limit Values for Chemical Substances and Physical Agents and Biological Exposure Indices

AMERICAN SOCIETY FOR TESTING AND MATERIALS (ASTM)

\-ASTM D 4214-\	(1989) Evaluating the Degree of Chalking of Exterior Paint Films

FEDERAL SPECIFICATIONS (FS)

\-FS TT-E-489-\	(Rev H) Enamel, Alkyd, Gloss, Low Voc Content
\-FS TT-P-37-\	(Rev D; Am 4 Reinstatement Notice) Paint, Alkyd Resin; Exterior Trim, Deep Colors

STEEL STRUCTURES PAINTING COUNCIL (SSPC)

\-SSPC Paint 5-\	(1991) Zinc Dust, Zinc Oxide and Phenolic Varnish Paint
\-SSPC SP 2-\	(1989) Hand Tool Cleaning
\-SSPC SP 3-\	(1989) Power Tool Cleaning
\-SSPC SP 7-\	(1991) Brush-Off Blast Cleaning

1.2 SUBMITTALS

Approval is required for submittals with a "GA" designation; submittals having an "FIO" designation are for information only. The following shall be submitted in accordance with Section \=01300=\ SUBMITTAL PROCEDURES:

SD-01 Data\

Paint\; *FIO*\.

The names, quantity represented, and intended use for the proprietary brands of materials proposed to be substituted for the specified materials when the required quantity of a particular batch is 50 gallons or less.

SD-06 Instructions\

Mixing and Thinning\; *FIO*\.

Application\; *FIO*\.

Manufacturer's current printed product description, material safety data sheets (MSDS) and technical data sheets for each coating system.

SD-09 Reports\

Paint\; *FIO*\.

A statement as to the quantity represented and the intended use, plus the following test report for batches in excess of 50 gallons:

a. A test report showing that the proposed batch to be used meets all specification requirements, or:

b. A test report showing that a previous batch of the same formulation as the batch to be used met all specification requirements, plus, on the proposed batch to be used, a report of test results for properties of weight per gallon, viscosity, fineness of grind, drying time, color, and gloss.

SD-13 Certificates\

Lead\; *FIO*\.

Volatile Organic Compound (VOC) Content\; *FIO*\.

Certificate stating that paints for interior use contain no mercurial mildewcide or insecticide. Certificate stating that paints proposed for use contain not more than 0.06 percent lead. Certificate stating that paints proposed for use meet the VOC regulations of the local Air Pollution Control Districts having jurisdiction over the geographical area is which the project is located.

Paint\; *GA*\.

While the material is at the site or source of supply, and at a time agreeable to the Contractor and the Contracting Officer, a 1 quart sample of each color and batch, except for quantities of 50 gallons or less, shall be taken by random selection from the sealed containers by the Contractor in the presence of a representative of the Contracting Officer. The contents of the containers to be sampled shall be thoroughly mixed to ensure that the sample is representative. Samples shall be identified by designated name, specification number, manufacturer name and address, batch number, project contract number, intended use, and quantity involved.

Paint Chip Samples\; *GA*\

The Contractor shall furnish a coated card for each coating proposed for use which shows the actual color, gloss, and general appearance of the material. Each color card shall be identified manufacturer's number, and intended use. The color card shall be no smaller than 3 x 5 inches.

1.3 PACKAGING, LABELING, AND STORING

Paints shall be in sealed containers that legibly show the designated name, formula or specification number, batch number, color, quantity, date of manufacture, manufacturer's formulation number, manufacturer's directions including any warnings and special precautions, and name of manufacturer. Pigmented paints shall be furnished in containers not larger than 5 gallons. Paints and thinner shall be stored in accordance with the manufacturer's written directions and as a minimum stored off the ground, under cover, with sufficient ventilation to prevent the buildup of flammable vapors and at temperatures between 40 and 95 degrees F. Paints shall be stored on the project site or segregated at the source of supply sufficiently in advance of need to allow 30 days for testing.

1.4 APPROVAL OF MATERIALS

When samples are tested, approval of materials will be based on tests of the samples; otherwise, materials will be approved based on test reports furnished with them. If materials are approved based on test reports furnished, samples will be retained by the Contracting Officer for testing should the materials appear defective during or after application. In addition to any other remedies under the contract the cost of retesting defective materials will be at the Contractor's expense.

1.5 ENVIRONMENTAL CONDITIONS

Unless otherwise recommended by the paint manufacturer, the ambient temperature shall be between 45 and 95 degrees F when applying coatings .

1.6 SAFETY AND HEALTH

Work shall comply with applicable Federal, State, and local laws and regulations The Activity Hazard Analysis shall include analyses of the potential impact of painting operations on painting personnel and on others involved in and adjacent to the work zone.

1.6.1 Worker Exposure

Exposure of workers to chemical substances shall not exceed limits as established by \-ACGIH-02,-\ or as required by a more stringent applicable regulation.

1.6.2 Toxic Compounds

Toxic compounds having ineffective physiological properties, such as odor or irritation levels, shall not be used unless approved by the Contracting Officer.

1.6.3 Training

Workers having access to an affected work area shall be informed of the contents of the applicable material data safety sheets (MSDS) and shall be informed of potential health and safety hazard and protective controls associated with materials used on the project. An affected work area is one which may receive mists and odors from the painting operations. Workers involved in preparation, painting, and clean-up shall be trained in the safe handling and application, and the exposure limit, for each material which the worker will use in the project. Personnel having a need to use respirators and masks shall be instructed in the use and maintenance of such equipment.

1.6.4 Coordination

Work shall be coordinated to minimize exposure of building occupants, other Contractor personnel, and visitors, to mists and odors from preparation, painting, and clean-up operations.

PART 2 PRODUCTS

2.1 *PAINT*\

The term "paint" as used herein includes enamels, paints, and other coatings, whether used as prime, intermediate, or finish coat. Paint shall conform to the respective specifications listed for use in the painting schedules at the end of this section, except when the required amount of a material of a particular batch is 50 gallons or less, an approved first-line proprietary paint material with similar intended usage and color to that specified may be used. Additional requirements are as follows:

2.1.1 Colors and Tints

Colors shall be as selected from manufacturer's standard colors, as indicated. Manufacturer's standard color is for identification of color only.

2.1.2 NOT USED

2.1.3 *Lead*\

Paints containing lead in excess of 0.06 percent by weight of the total nonvolatile content (calculated as lead metal) shall not be used.

2.1.4 Chromium

Paints containing zinc chromate or strontium chromate pigments shall not be used.

2.1.5 *Volatile Organic Compound (VOC) Content*\

Paints shall comply with applicable state and local laws enacted to insure compliance with Federal Clean Air Standards and shall conform to the restrictions of the local air pollution control authority.

PART 3 EXECUTION

3.1 PROTECTION OF AREAS NOT TO BE PAINTED

Items not to be painted which are in contact with or adjacent to painted surfaces shall be removed or protected prior to surface preparation and painting operations. Items removed prior to painting shall be replaced when painting is completed. Following completion of painting, workmen skilled in the trades involved shall reinstall removed items. Surfaces contaminated by coating materials shall be restored to original condition.

3.2 SURFACE PREPARATION

Surfaces to be painted shall be clean and free of foreign matter before application of paint or surface treatments. Oil and grease shall be removed with clean cloths and cleaning solvents prior to mechanical cleaning. Cleaning solvents shall be of low toxicity with a flashpoint in excess of 100 degrees F. Cleaning shall be programmed so that dust and other contaminants will not fall on wet, newly painted surfaces.

3.2.1 NOT USED

3.2.2 Ferrous Surfaces

Ferrous surfaces including those that have been shop-coated, shall be solvent-cleaned. Surfaces that contain loose rust, loose mill scale, and other foreign substances shall be cleaned mechanically with hand tools according to \-SSPC SP 2-\, power tools according to \-SSPC SP 3-\, or by sandblasting according to \-SSPC SP 7-\. Shop-coated ferrous surfaces shall be protected from corrosion by treating and touching up corroded areas immediately upon detection.

3.3 *MIXING AND THINNING*\

When thinning is approved as necessary to suit surface, temperature, weather conditions, or application methods, paints may be thinned in accordance with the manufacturer's directions. When thinning is allowed, paints shall be thinned immediately prior to application with not more than 1 pint of suitable thinner per gallon. The use of thinner shall not relieve the Contractor from obtaining complete hiding, full film thickness, or required gloss. Thinning shall not cause the paint to exceed local limits on volatile organic compounds. Paints of different manufacturers shall not be mixed.

3.4 *APPLICATION*\

Painting practices shall comply with applicable state and local laws enacted to insure compliance with Federal Clean Air Standards. Unless otherwise specified or recommended by the paint manufacturer, paint may be applied by brush, roller,

or spray. At the time of application, paint shall show no signs of deterioration. Uniform suspension of pigments shall be maintained during application. Each coat of paint shall be applied so dry film shall be of uniform thickness and free from runs, drops, ridges, waves, pinholes or other voids, laps, brush marks, and variations in color, texture, and finish. Hiding shall be complete. Rollers for applying paints and enamels shall be of a type designed for the coating to be applied and the surface to be coated. Special attention shall be given to insure that all edges, corners, crevices, welds, and rivets receive a film thickness equal to that of adjacent painted surfaces. Paints, shall be applied only to surfaces that are completely free of moisture as determined by sight or touch.

3.4.1 NOT USED

3.4.2 Respirators

Operators and personnel in the vicinity of operating paint sprayers shall wear respirators.

3.4.3 First Coat

The first coat on surfaces shall include repeated touching up of suction spots or overall application of primer or sealer to produce uniform color and gloss.

3.4.4 Timing

Surfaces that have been cleaned, pretreated, and otherwise prepared for painting shall be given a coat of the specified first coat as soon as practical after such pretreatment has been completed, but prior to any deterioration of the prepared surface. Sufficient time shall elapse between successive coats to permit proper drying. This period shall be modified as necessary to suit weather conditions. Oil-based or oleoresinous solvent-type paints shall be considered dry for recoating when the paint feels firm, does not deform or feel sticky under moderate pressure of the thumb, and the application of another coat of paint does not cause the undercoat to lift or lose adhesion.

3.4.5 NOT USED
3.4.6 NOT USED
3.4.7 NOT USED

3.4.8 Ferrous-Metal Primer

Primer for ferrous-metal shall be applied to ferrous surfaces to receive paint other than asphalt varnish prior to deterioration of the prepared surface.

3.5 NOT USED
3.6 NOT USED

3.7 SURFACES TO BE PAINTED

All steel surfaces including structural steel, steel decking, steel joists, steel plates, and pipe bollards.

3.8 NOT USED

3.9 CLEANING

Cloths, cotton waste and other debris that might constitute a fire hazard shall be placed in closed metal containers and removed at the end of each day. Upon completion of the work, staging, scaffolding, and containers shall be removed from the site or destroyed in an approved manner. Paint and other deposits on adjacent surfaces shall be removed and the entire job left clean and acceptable.

3.10 PAINTING SCHEDULES

The following painting schedules identify the surfaces to be painted and prescribe the paint to be used and the number of coats of paint to be applied. Contractor options are indicated by -or- between optional systems or coats.

EXTERIOR PAINTING SCHEDULE

Surface	First Coat	Second Coat	Third Coat
Ferrous metal, unless otherwise specified.			
	\-SSPC Paint 5-\	\-FS TT-E-489-\	\-FS TT-E-489-\
Galvanized Metal:			
	\-SSPC Paint 5-\	\-FS TT-P-37-\	\-FS TT-P-37-\

SECTION 11240

GRANULAR ACTIVATED CARBON ADSORPTION SYSTEM-LIQUID PHASE

INDEX

PART 1 GENERAL
- 1.1. REFERENCES
- 1.2. GENERAL REQUIREMENTS
- 1.3. SUBMITTALS
- 1.4. MANUFACTURER'S SERVICES
- 1.5. DELIVERY AND STORAGE

PART 2 PRODUCTS
- 2.1. SYSTEM DESIGN, GENERAL
- 2.2. EQUIPMENT
- 2.3. CARBON ADSORPTION SYSTEM
- 2.4. WORK INCLUDED
- 2.5. MATERIALS AND EQUIPMENT
- 2.6. ADSORBER VESSELS
- 2.7. WATER DISTRIBUTION SYSTEM
- 2.8. UNDERDRAIN COLLECTION SYSTEM
- 2.9. FREEZE PROTECTION
- 2.10. PIPING NETWORK FOR GAC VESSELS
- 2.11. GRANULAR ACTIVATED CARBON

PART 3 EXECUTION
- 3.1. PREPARATION
- 3.2. EQUIPMENT INSTALLATION
- 3.3 PIPE, VALVES, FITTINGS AND APPURTENANCES
- 3.4. TESTING AND ADJUSTING
- 3.5. PAINTING
- 3.6. NONCOMPLIANCE WITH PERFORMANCE REQUIREMENTS

SECTION 11240

GRANULAR ACTIVATED CARBON ADSORPTION SYSTEM-LIQUID PHASE

PART 1. GENERAL

1.1. REFERENCES

The publications listed below form a part of this specification to the extent referenced. The publications are referenced in the text by basic designation only.

MILITARY SPECIFICATION (MIL. SPEC.):

MIL-T-27730A	Tape, Antisieze, Polytetrafluoroethylene, with Dispenser

AMERICAN NATIONAL STANDARDS INSTITUTE, INC. (ANSI) STANDARDS:

ANSI B1.20.1	(1983) Pipe Threads, General Purpose (Inch)
ANSI B16.1	(1989) Cast Iron Pipe Flanges and Flanged Fittings
ANSI B16.3	(1985) Malleable-Iron Threaded Fittings, Classes 150 and 300
ANSI B40.1	(1985) Gauges-Pressure Indicating Dial Type-Elastic Element

AMERICAN PETROLEUM INSTITUTE (API) PUBLICATION:

API Spec 6D	(1991) Pipeline Valves (Gate, Plug, Ball, and Check Valves

AMERICAN SOCIETY FOR TESTING AND MATERIALS (ASTM) PUBLICATIONS:

ASTM A 36	(1990) Structural Steel
ASTM A 53	(1990b) Pipe, Steel, Black and Hot-Dipped Zinc-Coated (Galvanized) Welded and Seamless, for Ordinary Uses
ASTM A 307	(1990) Carbon Steel Bolts and Studs, 60,000 psi Tensile Strength
ASTM D 1785	(1991) Poly(Vinyl Chloride) (PVC) Plastic Pipe, Schedules 40, 80, and 120
ASTM D 2241	(1989) Poly(Vinyl Chloride) (PVC) Pressure-Rated (SDR Series)

ASTM D 2564	(1991) Solvent Cements for Poly(Vinyl Chloride) (PVC) Plastic Pipe and Fittings
ASTM D 3139	(1989) Joints for Plastic Pressure Pipes Using Flexible Elastomeric Seals
ASTM F 477	(1990) Elastomeric Seals (Gaskets) for Joining Plastic Pipe

AMERICAN SOCIETY OF MECHANICAL ENGINEERS (ASME) PUBLICATIONS:

Boiler and Pressure Vessel Code.

Section IV	Heating Boilers (1989; Addenda: 1990)
Section VIII	Pressure Vessels (1989; Addenda: 1990)
Section IX	Welding and Brazing Qualifications (1989; Addenda: 1990)

AMERICAN WATER WORKS ASSOCIATION (AWWA) STANDARDS:

AWWA B604	(1974) Granular Activated Carbon
AWWA C110	(1987) Ductile-Iron and Gray-Iron Fittings, 3 In. Through 48 In., for Water and Other Liquids
AWWA C111	(1990) Rubber-Gasket Joints for Ductile-Iron and Gray-Iron Pressure Pipe and Fittings
AWWA C115	(1988) Flanged Ductile-Iron and Gray-Iron Pipe With Threaded Flanges
AWWA C151	(1986) Ductile-Iron Pipe, Centrifugally Cast in Metal Mold or Sand-Lined Molds, for Water or Other Liquids
AWWA C200	(1986) Steel Water Pipe 6 In. and Larger
AWWA C206	(1988) Field Welding of Steel Water Pipe
AWWA C207	(1986) Steel Pipe Flanges for Waterworks Service - Sizes 4 In. Through 144 In
AWWA C208	(1983, R 1989) Dimensions for Fabricated Steel Water Pipe Fittings

AMERICAN WELDING SOCIETY (AWS) STANDARDS:

AWS B2.1	(1984) Welding Procedure and Performance Qualification
AWS D1.1	(1990) Structural Welding Code - Steel

MANUFACTURER'S STANDARDIZATION SOCIETY OF THE VALVE AND FITTING INDUSTRY, INC. (MSS) STANDARDS:

MSS SP-58	(1988) Pipe Hangers and Supports - Materials, Design and Manufacture
MSS SP-69	(1983) Pipe Hangers and Supports - Selection and Application
MSS SP-70	(1990) Cast Iron Gate Valves, Flanged and Threaded Ends
MSS SP-78	(1987) Cast Iron Plug Valves, Flanged and Threaded Ends
MSS SP-80	(1987) Bronze Gate, Globe, Angle and Check Valves

NATIONAL ELECTRICAL MANUFACTURERS ASSOCIATIONS (NEMA) STANDARDS:

NEMA 250	(1985, R 1988) Enclosures for Electrical Equipment (1000 Volts Maximum)
NEMA ICS 1	(1988) Industrial Control and Systems Incl Rev 1 and 2

STEEL STRUCTURES PAINTING COUNCIL (SSPC) SPECIFICATIONS:

SSPC-SP 10	(1989) Near-White Blast Cleaning
SSPC-PS 13.01	(1982) Epoxy-Polyamide Painting System

1.2. GENERAL REQUIREMENTS

1.2.1. STANDARD PRODUCTS

Material and equipment shall be the standard products of a manufacturer regularly engaged in the manufacture of such products. Items of equipment shall essentially duplicate equipment that has been in satisfactory use at least 2 years prior to bid opening. Equipment shall be supported by a carbon service organization that is in the opinion of the Contracting Officer, reasonably convenient to the job site. This specification shall cover the furnishing of a Granular Activated Carbon System each consisting of all necessary liquid-phase carbon adsorber(s) complete with vessel internals, granular activated carbon (GAC) piping system, piping connections, access ports, support structure (if warranted), and granular activated carbon.

1.2.2. NAMEPLATES

Equipment shall have the manufacturer's name, address, type or style, model and serial number, and catalog number on a plate secured to the item of equipment.

1.2.3. VERIFICATION OF DIMENSIONS

The Contractor shall become familiar with all details of the work, verify all dimensions in the field, and shall advise the Contracting Officer of any discrepancy before performing the work.

1.3. QUALIFICATIONS

1.3.1. Contractor

Contractor shall have had a minimum of 2 years of experience in the construction of landfill off gas collection and treatment systems

1.3.2. Single Source Supplier

The Contractor shall assign to a single supplier full responsibility for the furnishing of the adsorption system. The designated single supplier, however, need not manufacture the system but shall coordinate the selection, assembly, installation, and testing of the entire system as specified herein.

1.3.3. MANUFACTURER'S SERVICES

1.3.3.1. Manufacturer's Representative

Services shall be provided by a representative of the manufacturer who is experienced in the installation, adjustment, and operation of the equipment specified. The representative shall supervise the installing, adjusting, and testing of equipment.

1.3.3.2. Field Training

The Contractor shall conduct training course for designated operating, maintenance and support staff members. The training period, for a total of 8 hours of normal working time, shall start after the system is functionally completed but prior to final acceptance tests. Field training shall cover all of the items contained in the operating and maintenance instructions.

1.3.4. WELDING

Welding shall be performed in accordance with AWS D1.1 by welders certified to have passed qualification tests using procedures covered in AWS B2.1 or Section IX of the ASME Boiler and Pressure Vessel Code. The Contractor shall require any welder to retake the test when, in the opinion of the Contracting Officer, the work of the welder creates reasonable doubt as to his proficiency.

1.3.5. WARRANTY

The contractor shall warrant the carbon adsorption system for a period of 1 year after the acceptance of the entire system by the Contracting Officer.

1.4. SUBMITTALS

Contracting Officer's approval is required for submittals with a "GA" designation; submittals having a "FIO" designation are for information only. The following shall be submitted in accordance with SECTION \=01300=\ SUBMITTAL PROCEDURES:

SD-01 Data\

Spare Parts Data\; *FIO*\

After approval of the shop drawings, and not later than 3 months prior to the date of beneficial occupancy, the Contractor shall furnish spare parts data for each different item of material and equipment specified. The data shall include a complete list of parts and supplies, with current unit prices and source of supply. (Para. 3.2.1.)

Activated Carbon Adsorption Units\; *GA1*\.

a. List of Federal, State, and local laws, regulations, and permits concerning activated carbon adsorption units that are applicable to the Contractor's proposed operations and the requirements imposed by those laws, regulations, and permits.

b. Instrumentation and controls; capacities and pressure drop; make and model; complete list of equipment and materials, including manufacturer's descriptive and technical literature; performance charts and curves; catalog cuts; and installation instructions.

Activated Carbon\; *GA*\.

Iodine number; isotherm and column test data. Design calculations indicating removals of each of the listed organic compounds in the carbon bed. Material safety data sheet.

Adsorption Battery Components\; *FIO*\.

Demonstration of, or design calculations for, the total head loss through the carbon, adsorbers and appurtenant piping.

SD-04 Drawings\

Shop Drawings\; *GA*\

Shop drawings shall be submitted in accordance with **SECTION \=01300=\: SUBMITTAL PROCEDURES** and shall consist of a complete list of equipment and materials, including manufacturer's descriptive and technical literature; performance charts and curves; catalog cuts; and installation instructions. Shop drawings shall also contain complete wiring and schematic diagrams; equipment layout and anchorage; and any other details required to demonstrate that the system has been coordinated and shall properly function as a unit. (Para. 3.1.1.)

SD-09 Reports\

Performance Test Reports\; *GA*\

Upon completion and testing of the installed system, test reports shall be submitted in booklet form showing all field tests performed to adjust each component and all field tests performed to prove compliance with the specified performance criteria. Each test report shall indicate the final position of controls. (Para. 3.2.3.)

SD-13 Certificates\

Activated Carbon\; *FIO*\.

Manufacturer's certificates, including the name and address of the production facility, attesting that the activated carbon furnished meets the specified requirements. Certification of the activated carbon supplier and regeneration facility. Copies of the Department of Transportation licenses of carbon regeneration service.

Equipment\; *FIO*\.

Verification from a Registered Professional Engineer, licensed to practice mechanical or structural engineering, as appropriate, in the State in which the system was fabricated, stating that: 1) The fabrication drawings and pressure calculations for the shells and tanks were designed for the listed conditions in accordance with the appropriate codes and standards. 2) The erection drawings for the shell and tank foundations and supports were designed for the listed conditions in accordance with the appropriate codes and standards.

Motors\; *FIO*\.

Manufacturer's certificates attesting that the motors meet the specified requirements.

SD-14 Samples\

Special Tools\; *GA*\

One set of special tools, calibration devices, and instruments shall be provided for operation, calibration, and maintenance of the equipment. (Para. 3.2.4)

SD-19 Operating and Maintenance Manuals\

Operating Instructions\; *GA*\

The Contractor shall furnish to the Contracting Officer six complete copies of operating instructions outlining the step-by-step procedures required for system start-up, operation and shutdown. The instructions shall include the manufacturer's name, model number, service manual, parts list and recommended spare parts list, brief description of all equipment and their basic operating features, and operating instructions for each piece of equipment. A system layout showing piping, valves, controls, and approved wiring and control diagrams

shall be provided. The operating instructions shall also contain any manufacturer's bulletins, cuts, and descriptive data that may be helpful in operating, maintaining, or repairing the system or system components.

Maintenance Instructions\; *GA*\

The Contractor shall furnish to the Contracting Officer six complete copies of maintenance instructions listing routine maintenance procedures including lubrication for each piece of equipment and for the system in general, possible breakdowns and repairs, and trouble shooting guides. The instructions shall include simplified diagrams for the system as installed.

Framed Instructions\; *GA*\

Framed instructions under glass or in laminated plastic, including wiring and control diagrams showing the complete layout of the entire system, shall be posted where directed. Condensed operating instructions explaining preventive maintenance procedures, methods of checking the system for normal safe operation, and procedures for safely starting and stopping the system shall be prepared in typed form, framed as specified above for the wiring and control diagrams and posted beside the diagrams. Proposed diagrams, instructions, and other sheets shall be submitted prior to posting. The framed instructions shall be posted before acceptance testing of the system.

1.5. MANUFACTURER'S SERVICES

The Contractor shall obtain the services of the manufacturer's representative experienced in the installation, adjustment, and operation of the equipment specified. The representative shall supervise the installation, adjustment, and testing of the equipment. The representative shall certify that equipment has been checked out, tested, and is ready for service. Up to 2 days service shall be provided at no expense.

1.6. DELIVERY AND STORAGE

All equipment delivered and placed in storage shall be stored with protection from the weather, humidity and temperature variations, dirt and dust, or other contaminants.

PART 2. PRODUCTS

2.1. SYSTEM DESIGN, GENERAL

The following specification describes all equipment, materials and services necessary to provide a completely installed Liquid-Phase Granular Activated Carbon Adsorption System capable of handling a minimum flow of 10 gpm. The system shall be comprised of two carbon adsorption units connected in series (a lead and a lag unit). The units shall treat the condensate from landfill vent gases (off gas). The Adsorption System shall consist of a GAC system consisting of modular adsorption vessels with a GAC piping system and all related appurtenances required for a completely installed and operational system and

granular activated carbon. The total system must be designed for economical carbon usage and ease and completeness of Granular Activated Carbon transfers. The Contractor shall assure that there is adequate space available for installation of bigger LGAC units if warranted during the operation period.

2.1.1. CARBON ADSORPTION

The Carbon Adsorption System supplier must take unit responsibility for the completely installed system. The supplier shall be responsible for design, fabrication, installation and startup of all mechanical components including, but not limited to, vessels, piping, instrumentation and controls. The Carbon Adsorption System supplier shall be responsible for supply, delivery, hydraulic loading and unloading, and environmentally approved regeneration of the spent carbon. The regeneration of the spent GAC must be in accordance with all applicable local, state, and Federal Regulations regarding solid waste materials and RCRA wastes.

2.1.2. CARBON REGENERATION

The Carbon Adsorption System supplier shall guarantee a reactivation/regeneration service contract. The quality of the reactivation and the carbon required for attrition shall be in full compliance with the specification herein for Granular Activated Carbon. The Carbon Adsorption System supplier shall also be able to remove and transport spent Granular Activated Carbon classified as hazardous under RCRA regulations, so that it can be transported to a reactivation facility as required.

2.2. EQUIPMENT

2.2.1. Liquid-Phase Carbon Adsorption Units

2.2.1.1. Design Conditions

The unit shall treat the condensate from landfill off gases. GAC units shall be capable of removing the following volatile organic compounds (VOCs) with the influent concentrations shown in parentheses. The VOCs of concern are methyl chloride (1100 ng/l), vinyl chloride (8600 ng/l), methylene chloride (80 ng/l), acetone (26 ng/l), carbon disulfide (300 ng/l), 1,1-Dichloroethene (86 ng/l), 1,1-Dichloroethane (150 ng/l), 1,2-Dichloroethene (1300 ng/l), 1,1,1-Trichloroethane (300 ng/l), trichloroethene (370 ng/l), benzene (140 ng/l), tetrachloroethene 1400 ng/l), toluene 600 ng/l), ethyl benzene (700 ng/l), styrene (10 ng/l), and xylenes (1300 ng/l). At a minimum, the GAC units shall be capable of achieving at least the maximum allowable effluent concentrations of these compounds. Refer to Section \=01402=\ CHEMICAL QUALITY MANAGEMENT for the maximum allowable effluent concentrations ("Acceptance Limits") for the compounds listed above and other treatment requirements and effluent limits. Each LGAC unit shall be at a minimum capable of handling a condensate flow of 10 gpm. A LGAC unit of 55-gallon in size (containing approximately 240 lbs. of GAC) may be capable of achieving the required effluent limits, however, the contractor shall adjust/modify the size of the unit if warranted to accomodate for at least a 30-day continuous operation.

In particular, the GAC units shall have a minimum removal efficiency for all the compounds listed above to comply with the local POTW's (City of Elkhart Wastewater Treatment Plant's) discharge requirements as outlined in Section \=01402=\ CHEMICAL QUALITY MANAGEMENT.

2.3. CARBON ADSORPTION SYSTEM

Battery limits for the carbon adsorption system shall be defined as beginning at the influent connection for the system and ending with the effluent connection for the system as shown on the drawings. All necessary equipment between these two points shall be provided as part of the complete design by the system supplier.

2.4. WORK INCLUDED

The work covered by this specification includes the furnishing and installation of all equipment materials, carbon and services to comprise a complete Liquid-Phase Carbon Adsorption System.

2.4.1. Adsorbers

Systems of downflow adsorbers and a water distribution and collection system, GAC piping system skid (if warranted) and all internals shall be included. The GAC system shall be comprised of one on-line and one stand-by unit. The stand-by unit shall be stored on-site with protection from weather, humidity and temperature variation, dirt and dust, or other contaminants.

2.4.2. Piping and Valving

Influent, effluent, and interconnecting piping to the adsorbers shall be included as well as valving and piping for ease of operation and replacement of the GAC unit.

2.4.3. Carbon Slurry Piping

Provide granular activated carbon fill and discharge piping and valves and hose connections.

2.4.4. Miscellaneous Connections

Provide (if warranted) integral vent and safety relief piping, 1-1/2-in. water piping, and utility connections.

2.4.5. Carbon Media

Provide an initial charge granular activated carbon, as specified, installed per adsorber.

2.4.6. Documents

Provide complete set of technical specifications, system schematics, and operating and maintenance manual.

2.4.7. Qualifications

Contractor is required to provide experience record of 2 years of successful installation of this type of system.

2.5. MATERIALS AND EQUIPMENT

Materials and equipment shall conform to the following requirements:

2.5.1. STEEL PLATES, SHAPES AND BARS: ASTM A 36.

2.5.2. PIPE

2.5.2.1. Ductile Iron Pipe: AWWA C151.

2.5.2.1.1. Flanged Pipe: AWWA C115 with ANSI B16.1, Class 125 flanges.

2.5.2.1.2. Joints: AWWA C111.

2.5.2.1.3. Fittings: AWWA C110.

2.5.2.1.4. Bolts and Nuts: ASTM A 307, Grade B.

2.5.2.2. Steel Pipe: AWWA C200.

2.5.2.2.1. Flanged Joints: AWWA C207, Class B Ring Type.

2.5.2.2.2. Slip Joints: AWWA C200.

2.5.2.2.3. Mechanical Joints: AWWA C200.

2.5.2.2.4. Welded Joints: AWWA C206.

2.5.2.2.5. Fittings: AWWA C200 and fabricated in compliance with AWWA C208.

2.5.3. PIPE HANGERS AND SUPPORTS: MSS SP-58 and MSS SP-69.

2.5.4. VALVES

2.5.4.1. Angle, Check and Globe Valves: MSS SP-80, Type 3 Globe and Angle, Types 3 and 4 Check.

2.5.4.2. Gate Valves: MSS SP-80, Type 1, Class 150 or MSS SP-70, Type I, Class 125 Bronze Trim.

2.5.4.3. Ball Valves: Bronze ball valves shall comply with MSS SP-78. Iron ball valves shall comply with API Spec 6D.

2.5.4.4. Butterfly Valves: Ductile iron butterfly valves shall comply with API SPEC 6D.

2.5.5. JOINT COMPOUND

Joint compound for screwed joints shall be a stiff mixture of graphite and oil, inert filler and oil, or a graphite compound.

2.5.6. JOINT TAPE

Joint tape for screw joints shall comply with MIL-T-27730.

2.6. ADSORBER VESSELS

Carbon vessels complete with internal water distribution and underdrain systems (if warranted) shall be provided. The support structure (if warranted) shall be constructed of a material similar to the vessel and shall be welded to the vessel. The support structure and vessel shall have similar protective coating requirements. Each vessel shall be provided with a minimum of two lifting lugs welded to the shell. The carbon vessel shall be insulated in accordance with Section \=15250=\ THERMAL INSULATION FOR MECHANICAL SYSTEMS.

2.6.1. VESSEL CONSTRUCTION

2.6.1.1. Complete Vessel

Design, construct, and stamp vessel in accordance with ASME Code, Section VIII, for design pressure 125 psig at 150°F.

2.6.2. VESSEL INTERIOR FINISH

2.6.2.1. Type

Line vessel interior with vinyl ester resin or another surface coating recommended by the carbon manufacturer prior to delivery to site. Dry film thickness shall be as is customary with the manufacturer, and appropriate for the type of liner used. Liners shall be durable and able to withstand service in corrosive conditions for a period in excess of 20 years.

2.6.3. SAMPLE PORTS

Each LGAC unit shall have a sample port before and after the unit.

2.7. WATER DISTRIBUTION SYSTEM

Provide a water distribution system near the top of carbon bed to uniformly distribute influent water across carbon cross-section. The water velocity profile across the diameter of each bed shall be uniform in the downward direction at the surface of the carbon. The distribution system shall have device(s) to retain the bulk of the granular activated carbon bed, but allow free passage of carbon fines. The retainage device shall minimize pressure drop to the extent possible.

2.8. UNDERDRAIN COLLECTION SYSTEM

Provide collection system near bottom of carbon bed to collect treated water across carbon cross-section. The water velocity profile across the diameter of each bed shall be uniform in the downward direction at the underdrain location. The collection device(s) shall retain the granular activated carbon and allow free passage of treated water with a minimum of pressure drop. The treated water is collected by this system and discharged from the vessel to convey the treated water to the effluent pipe from the adsorber.

2.9. FREEZE PROTECTION

The GAC units shall be protected from freezing in accordance with Section \=16415=\ ELECTRICAL WORK.

2.10. PIPING NETWORK FOR GAC VESSELS

2.10.1. Piping and Valving

Provide piping and valving for following operating conditions, and in accordance with Drawings and approved piping submittals.

2.10.1.1. Normal Operation

Normal operation shall involve downward flow through vessels. Piping and valving shall be arranged in such a way that the lead vessel can be replaced by the lag vessel and the lag vessel can be replaced by a new vessel (or a vessel filled with fresh/regenerated carbon) when the breakthrough is reached with minimal effort and time. Piping and valving shall also be arranged to by-pass the adsorber units when/if necessary.

2.10.1.2. Carbon Unit Exchange

Isolate adsorber being serviced to allow other adsorber to remain in service. Locate valves at locations accessible to operators.

2.10.2. AUTOMATIC SIPHON BREAK

Provide automatic siphon break on GAC effluent to prevent draining of GAC vessels with influent flow stopped.

2.10.3. PRESSURE RELIEF DEVICE

Provide pressure relief device (if warranted) integral to adsorption system piping. The capacity of pressure relief as required by ASME Code.

2.10.4. PRESSURE GAUGES

2.10.4.1. Location

Provide pressure gauges upstream and downstream of each GAC vessel to monitor pressure drops across each vessel.

2.10.4.2. Size

4-1/2-in. face dia. on gauge.

2.10.4.3. Construction

Stainless steel bourdon tube in glycerin filled housing meeting ANSI B40.1.

2.10.4.4. Range

0 to 10 psig range with accuracy within 1% of full range.

2.11. GRANULAR ACTIVATED CARBON

2.11.1. TYPE AND AMOUNT

The carbon shall be of service carbon and shall be defined and certified as meeting specification prior to shipping and placement in the vessels. Vessels do not have to be shipped charged with carbon, but vessels shall be fully charged with carbon prior to system testing and startup. The carbon shall conform to AWWA B604 as well as the specifications herein. Head loss at each unit at rated flow shall not exceed 1 psig when filled with fresh media.

2.11.2. CERTIFICATION

Provide analysis sheet with delivered carbon, certifying carbon complies with these Specifications.

PART 3. EXECUTION

3.1. PREPARATION

A reinforced concrete foundation pad, of the size and design recommended by the manufacturer, shall be installed in accordance with **SECTION \=03300A=\ CONCRETE FOR BUILDING CONSTRUCTION.**

3.2. EQUIPMENT INSTALLATION

Installation of all equipment shall be performed in accordance with the drawings and manufacturer's recommendations.

3.3. PIPE, VALVES, FITTINGS AND APPURTENANCES

Installation of piping including cleaning, cutting, threading and jointing, shall be in accordance with Section \=15370=\ PROCESS PIPING AND APPURTENANCES. Differing metals shall be provided with isolation devices.

3.3.1. Strainers

Strainer heads and strainers shall be protected while concrete fill provided for support of the header-lateral-distributor head is being placed.

3.3.2. Heat Trace and Insulation

Exterior pipe and appurtenances shall be provided with an electrical heat trace and insulated in accordance with Section \=15250=\ THERMAL INSULATION FOR MECHANICAL SYSTEMS.

3.4. TESTING AND ADJUSTING

The adsorption vessels shall be filled and inspected for leaks. All leaks shall be repaired by removal of defective materials and rewelding. Use of caulking compounds is not permitted. Testing and repairs shall be repeated until vessels are free from leaks. As soon as practicable after completion, an operating test of the adsorbers shall be performed to demonstrate that they function properly. After completion of all tests, the operation while on-line with the water source in accordance with the manufacturer's written instructions.

3.5. PAINTING

3.5.1. SURFACE PREPARATION

All steel surfaces shall receive a near white commercial blast in accordance with SSPC-SP-10 to remove rust, mill scale, and weld slag. All weld splatter and surface roughness shall be removed by chipping and grinding smooth.

3.5.2. SURFACE CONDITION PRIOR TO APPLICATION

All prepared surfaces shall be thoroughly dry and free from preparation dust and foreign matter prior to the application of any coating. Craftsmen applying protective coatings shall be thoroughly familiar with the application guidelines and preparation requirements of the product to be applied. All materials shall be evenly applied and shall be free from obvious defects.

3.5.3. APPLICATION

Immediately after surface preparation, an epoxy-polyamide paint system (or a paint system recommended by the carbon manufacturer) designed for protection of steel and meeting SSPC-PS-13.01 specification shall be applied. No discoloration of the cleaned area shall occur prior to the application of this coat. All steel surfaces shall receive a 3 mil dry film thickness of this protective coating.

3.5.4. TESTING

Dry film thickness of all coats shall be made by employing standard calibrated dry film thickness gauges.

3.5.5. PAINT TOUCH-UP KIT

A paint touch-up kit shall be provided for repair of any scratches or mars that occur during shipment or installation. Detailed instructions shall be included and the materials shall be compatible with the coatings as outlined above.

3.6. NONCOMPLIANCE WITH PERFORMANCE REQUIREMENTS

Removals shall meet or exceed those specified in the performance requirements of this specification. If at any time the results of the organic analyses of the effluent water (condensate) from the GAC system indicates that the GAC system is not in compliance with Contract Documents, flow through the GAC shall be stopped and the system shall be said to be inoperable. If at any time the operation of the GAC system does not meet the hydraulic, instrumentation, or control requirements set forth in this Contract, then flow through system shall be stopped and the system shall be said to be inoperable. The Contractor, upon notification of system non-compliance, shall immediately proceed to repair or modify the system so that it is in compliance with the Contract Documents. The Contractor shall notify the Contracting Officer one day before the GAC system is to be restarted and retested.

SECTION 11241

GRANULAR ACTIVATED CARBON ADSORPTION SYSTEM-VAPOR PHASE

INDEX

PART 1 GENERAL
1.1. REFERENCES
1.2. GENERAL REQUIREMENTS
1.3. SUBMITTALS
1.4. MANUFACTURER'S SERVICES
1.5. DELIVERY AND STORAGE
1.6. DOCUMENTS
1.7. OPERATION AND MAINTENANCE
1.8. SYSTEM DESCRIPTION

PART 2. PRODUCTS
2.1. MATERIALS
2.2. EQUIPMENT
2.3. GAC PIPING SYSTEM SKID

PART 3 EXECUTION
3.1. PREPARATION
3.2. EQUIPMENT INSTALLATION
3.3 PIPE, VALVES, FITTINGS AND APPURTENANCES
3.4 PAINTING/CORROSION PREVENTION
3.5. TESTS
3.6. NONCOMPLIANCE WITH PERFORMANCE REQUIREMENTS

SECTION 11241

GRANULAR ACTIVATED CARBON ADSORPTION SYSTEM-VAPOR PHASE

PART 1. GENERAL

1.1. REFERENCES

The publications listed below form a part of this specification to the extent referenced. The publications are referenced in the text by basic designation only.

MILITARY SPECIFICATION (MIL. SPEC.):

MIL-T-27730A	Tape, Antisieze, Polytetrafluoroethylene, with Dispenser

AMERICAN NATIONAL STANDARDS INSTITUTE, INC. (ANSI) STANDARDS:

ANSI B1.20.1	(1983) Pipe Threads, General Purpose (Inch)
ANSI B16.1	(1989) Cast Iron Pipe Flanges and Flanged Fittings
ANSI B16.3	(1985) Malleable-Iron Threaded Fittings, Classes 150 and 300
ANSI B40.1	(1985) Gauges-Pressure Indicating Dial Type-Elastic Element

AMERICAN PETROLEUM INSTITUTE (API) PUBLICATION:

API Spec 6D	(1991) Pipeline Valves (Gate, Plug, Ball, and Check Valves

AMERICAN SOCIETY OF MECHANICAL ENGINEERS (ASME) PUBLICATIONS:

Boiler and Pressure Vessel Code.

Section IV	Heating Boilers (1989; Addenda: 1990)
Section VIII	Pressure Vessels (1989; Addenda: 1990)
Section IX	Welding and Brazing Qualifications (1989; Addenda: 1990)

AMERICAN WATER WORKS ASSOCIATION (AWWA) STANDARDS:

AWWA D100	(1984) Welded Steel Tanks for Water Storage
AWWA D120	(1984) Thermosetting Fiberglass-Reinforced Plastic Tanks

AWWA B604	(1974) Granular Activated Carbon

AMERICAN WELDING SOCIETY (AWS) STANDARDS:

AWS B2.1	(1984) Welding Procedure and Performance Qualification
AWS D1.1	(1990) Structural Welding Code - Steel

NATIONAL ELECTRICAL MANUFACTURERS ASSOCIATIONS (NEMA) STANDARDS:

NEMA 250	(1985, R 1988) Enclosures for Electrical Equipment (1000 Volts Maximum)
NEMA ICS 1	(1988) Industrial Control and Systems Incl Rev 1 and 2

NATIONAL FIRE PROTECTION ASSOCIATION (NFPA) STANDARDS

NFPA 49	(1975) Hazardous Chemicals Data
NFPA 70	(1987) National Electrical Code
NFPA 325M	(1984) Flammable Liquids, Gases and Volatile Solids
NFPA 704	(1985) Identification of the Fire Hazards of Materials

SHEET METAL AND AIR CONDITIONING CONTRACTORS' NATIONAL ASSOCIATION, INC. (SMACNA) PUBLICATIONS

Accepted Industry Practice for Industrial Duct Construction (1st Ed., Oct. 1975)

Fibrous Glass Duct Construction Standards-Metal and Flexible (1st Ed., Jan. 1985)

HVAC Air Duct Leakage Test Manual (1st Ed., 1985)

UNDERWRITERS LABORATORIES, INC. (UL) PUBLICATION

UL 1096	Electrical Central Air Heating Equipment (Jul. 1, 1986, 4th Ed.; Rev thru Jan. 30, 1988)

1.2. GENERAL REQUIREMENTS

1.2.1. STANDARD PRODUCTS

Material and equipment shall be the standard products of a manufacturer regularly engaged in the manufacture of such products. Items of equipment shall essentially duplicate equipment that has been in satisfactory use at least 2 years prior to

bid opening. Equipment shall be supported by a carbon service organization that is in the opinion of the Contracting Officer, reasonably convenient to the job site. Nameplates on major equipment items such as adsorption shells shall have the manufacturer's name, address, type or style, model or serial number, and catalog number on a plate secured to the item of equipment. This specification shall cover the furnishing of a Vapor-Phase Granular Activated Carbon (VGAC) System consisting of all necessary vapor-phase carbon adsorbers complete with vessel internals, GAC piping system, piping connections, access ports, support structure, and granular activated carbon.

1.2.2. NAMEPLATES

Equipment shall have the manufacturer's name, address, type or style, model and serial number, and catalog number on a plate secured to the item of equipment.

1.2.3. VERIFICATION OF DIMENSIONS

The Contractor shall become familiar with all details of the work, verify all dimensions in the field, and shall advise the Contracting Officer of any discrepancy before performing the work.

1.2.4. WELDING

Welding shall be performed in accordance with AWS D1.1 by welders certified to have passed qualification tests using procedures covered in AWS B2.1 or Section IX of the ASME Boiler and Pressure Vessel Code. The Contractor shall require any welder to retake the test when, in the opinion of the Contracting Officer, the work of the welder creates reasonable doubt as to his proficiency.

1.2.5. WARRANTY

Due to the purchase of the units, the contractor shall warrant the carbon adsorption system for a period of 1 year after the start-up. This one year warranty shall be provided for the carbon adsorber system to ensure that the system shall be free from defects caused by poor workmanship of material. The system supplier shall repair of replace any defective equipment during the one year period at no additional cost to the owner.

1.3. SUBMITTALS

Contracting Officer's approval is required for submittals with a "GA" designation; submittals having a "FIO" designation are for information only. The following shall be submitted in accordance with SECTION 01300: SUBMITTAL PROCEDURES:

SD-01 Data\

Spare Parts Data\; *FIO*\

After approval of the shop drawings, and not later than 3 months prior to the date of beneficial occupancy, the Contractor shall furnish spare parts data for

each different item of material and equipment specified. The data shall include a complete list of parts and supplies, with current unit prices and source of supply. (Para. 3.2.1.)

SD-04 Drawings

Shop Drawings; *GA*

Shop drawings shall consist of a complete list of equipment and materials, including manufacturer's descriptive and technical literature; performance charts and curves; catalog cuts; and installation instructions. Shop drawings shall also contain complete wiring and schematic diagrams; equipment layout and anchorage; and any other details required to demonstrate that the system has been coordinated and shall properly function as a unit. (Para. 3.1.1.)

SD-09 Reports

Performance Test Reports; *GA*

Upon completion and testing of the installed system, test reports shall be submitted in booklet form showing all field tests performed to adjust each component and all field tests performed to prove compliance with the specified performance criteria. Each test report shall indicate the final position of controls. (Para. 3.2.3.)

SD-13 Certificates

Granular Activated Carbon Certifications; *GA*(Para. 11.3)

SD-14 Samples

Special Tools; *GA*

One set of special tools, calibration devices, and instruments shall be provided for operation, calibration, and maintenance of the equipment. (Para. 3.2.4)

SD-19 Operating and Maintenance Manuals

Operating Instructions; *GA*

The Contractor shall furnish to the Contracting Officer six complete copies of operating instructions outlining the step-by-step procedures required for system start-up, operation and shutdown. The instructions shall include the manufacturer's name, model number, service manual, parts list and recommended spare parts list, brief description of all equipment and their basic operating features, and operating instructions for each piece of equipment. A system layout showing piping, valves, controls, and approved wiring and control diagrams shall be provided. The operating instructions shall also contain any manufacturer's bulletins, cuts, and descriptive data that may be helpful in operating, maintaining, or repairing the system or system components.

Maintenance Instructions*\; *GA

The Contractor shall furnish to the Contracting Officer six complete copies of maintenance instructions listing routine maintenance procedures including lubrication for each piece of equipment and for the system in general, possible breakdowns and repairs, and trouble shooting guides. The instructions shall include simplified diagrams for the system as installed.

Framed Instructions*\; *GA

Framed instructions under glass or in laminated plastic, including wiring and control diagrams showing the complete layout of the entire system, shall be posted where directed. Condensed operating instructions explaining preventive maintenance procedures, methods of checking the system for normal safe operation, and procedures for safely starting and stopping the system shall be prepared in typed form, framed as specified above for the wiring and control diagrams and posted beside the diagrams. Proposed diagrams, instructions, and other sheets shall be submitted prior to posting. The framed instructions shall be posted before acceptance testing of the system.

1.4. MANUFACTURER'S SERVICES

The GAC systems shall be obtained from the manufacturer through a service contract. However, the option of purchasing the equipment after an initial utilization period shall also be available. The service contract shall include provisions to reduce the number of units in service depending on sampling results after the initial operation period. Under the service contract, the manufacturer shall provide the adsorber, carbon, spent carbon handling and carbon reactivation.

A manufacturer's representative shall supervise the installation, adjustment, and testing of the equipment. The representative shall certify that equipment has been checked out, tested, and is ready for service. The Carbon Adsorption System supplier must take unit responsibility for the completely installed system. The supplier shall be responsible for design, fabrication, installation and startup of all mechanical components including, but not limited to, vessels, piping, instrumentation and controls. The Carbon Adsorption System supplier shall be responsible for supply, delivery, hydraulic loading and unloading, and environmentally approved regeneration of the spent carbon.

1.4.1. CARBON REGENERATION

The Carbon Adsorption System supplier shall guarantee a reactivation/regeneration service contract (if warranted). The quality of the reactivation and the carbon required for attrition shall be in full compliance with the specification herein for Granular Activated Carbon. The Carbon Adsorption System supplier shall also be able to remove and transport spent Granular Activated Carbon classified as hazardous under RCRA regulations, so that it can be transported to a reactivation facility as required. The regeneration of the spent GAC must be in accordance with all applicable local, state, and Federal Regulations regarding solid waste materials and RCRA wastes.

1.5. DELIVERY AND STORAGE

All equipment delivered and placed in storage shall be stored with protection from the weather, humidity and temperature variations, dirt and dust, or other contaminants.

1.5.1. Protection of Material

Before, during, and after installation, ducts, fittings, and joint material shall be handled and stored in accordance with the manufacturer's recommendations. Storage facilities for plastic duct materials, fittings, joint materials and solvents shall be classified and marked in accordance with NFPA 704, with classification as indicated in NFPA 49 and NFPA 325M. Plastic ducts and fittings shall be protected from exposure to sunlight and any environment that would result in damage or deterioration to the material. Solvents, solvent compounds, lubricants, elastomeric gaskets, and any similar materials required to install the plastic duct shall be stored in accordance with the manufacturer's recommendation and shall be discarded if the storage period exceeds the recommended shelf life. Solvents in use shall be discarded when the recommended pot life is exceeded.

1.5.2. Single Source Responsibility

The contractor shall assign to a single supplier full responsibility for the furnishing of the activated carbon adsorption system. The designated supplier need not manufacture the entire system, but shall coordinate the design, assembly, installation and testing of the entire system as specified herein.

1.5.3. Qualifications

1.5.3.1. Carbon manufacturer shall have had at least two years experience with similar products for the reduction of volatile organics in the vapor phase.
1.5.3.2. Carbon regeneration facility shall have at least two years experience with regeneration of granular activated carbon to remove volatile organics and hydrogen sulfide.

1.6. DOCUMENTS

Provide complete set of technical specifications, system schematics, and operating and maintenance manual.

1.7. OPERATION AND MAINTENANCE

1.7.1. Operating instructions outlining the step-by-step procedures required for system start up, operation and shutdown shall be furnished. The instructions shall include the manufacturer's name, model number, service manual, parts list, and basic description of all equipment and their basic operational features. Parts lists shall include recommended spare parts and maintenance supplies with current unit prices and source of supply for each item of operable equipment. The performance test report data shall be reflected in the operating instructions.

1.7.2. Maintenance instructions listing routine maintenance procedures, possible breakdowns and repairs, and trouble shooting guide shall be furnished. The instructions shall include piping and component layouts and wiring and control diagrams of the system as installed.

1.8. SYSTEM DESCRIPTION

The following specification describes all equipment, materials and services necessary to provide a completely installed Vapor Phase Granular Activated Carbon Adsorption System. The system shall treat landfill vent gases including hydrogen sulfide. The Adsorption System shall consist of a GAC system consisting of modular adsorption vessels with a GAC piping system and all related appurtenances required for a completely installed and operational system and granular activated carbon. The total system shall be designed for economical carbon usage and ease and completeness of granular activated carbon transfers. The Contractor shall install two VGAC units in parallel downstream from each blower (see drawings). The landfill off gas treatment system shall have two blowers. The off gas flow rate through each VGAC unit shall be approximately 275 cfm.

1.8.1. Performance Requirements

The unit shall treat landfill off gases. GAC units shall be capable of primarily removing hydrogen sulfide from the off gas. In addition, some degree of volatile organic compounds removal shall also be achieved through the GAC system. The complete removal of VOCs such as methyl chloride, vinyl chloride, methylene chloride, acetone, carbon disulfide, 1,1-Dichloroethene, 1,1,-Dichloroethane, 1,2-Dichloroethene, 1,1,1-Trichloroethane, trichloroethene, toluene, ethyl benzene, styrene, and xylenes shall not be necessary as long as the effluent criteria set by the State of Indiana for the VOCs can be met. The State's total VOC limit is 15 lbs emitted/day or 25 tons emitted/year. Based on the limited available information on the VOCs in the off gas, the treatment system will emit less than 2 lbs of VOC/day (calculated value) without the carbon adsorption treatment. The capacity (amount of GAC needed, size of VGAC units) of the VGAC units shall be determined by the Contractor through a pilot test described in paragraph: PILOT TEST. Hydrogen sulfide concentration at the effluent of the VGAC units shall be below 1.0 ppm at all times.

Each VGAC unit shall have adequate amount of carbon to last at least 30 days before it is replaced.

1.8.1.1. Pilot Test. The contractor shall perform a pilot test prior to installation of the VGAC units to determine actual carbon usage to size the VGAC units. This shall be done by using i.e., a 55-gallon VGAC unit and a 100 cfm off gas flow rate (Contractor's Choice) and the pilot test shall continue until the hydrogen sulfide breakthrough is detected in the effluent which shall be determined upon detection of hydrogen sulfide by a hydrogen sulfide detection/monitoring equipment. The equipment shall at a minimum have a detection limit of 0.1 ppm which shall also be designated as the detection limit for the pilot test. The subject detection limit shall not be above the hydrogen sulfide concentration recommended by the flare manufacturer for protection of the flare system against the corrosion. The removal of hydrogen sulfide will depend

primarily on the influent hydrogen sulfide concentration and presence of VOCs in the off gas which will compete with hydrogen sulfide for adsorption onto the carbon. The VOCs will likely to interfere with the hydrogen sulfide removal.

PART 2. PRODUCTS

2.1. MATERIALS

2.1.1. ACTIVATED CARBON

Adsorption vessels shall be furnished with activated carbon selected for the removal of the compounds listed in paragraph: Performance Requirements. The carbon shall be of service carbon and shall be defined and certified as meeting specification prior to shipping and placement in the vessels. Vessels do not have to be shipped charged with carbon, but vessels shall be fully charged with carbon prior to system testing and startup. The carbon shall conform to AWWA B604 as well as the following:

2.1.1.1. Activated carbon shall have an affinity for each of the compounds listed in paragraph: Performance Requirements.

2.1.1.2. The GAC system shall be capable of reducing emissions for individual compounds to below the limits indicated in Section 01402: Chemical Quality Management.

2.1.1.3. The GAC shall be relatively unaffected by high moisture levels. A relative humidity level of at least 15% shall be maintained for influent off gas.

2.1.1.4. The GAC shall be capable of being regenerated off-site. Physical properties of the carbon shall be adequate to withstand a minimum of four regeneration cycles (if warranted).

2.1.1.5. Certification

The contractor shall provide analysis sheet with delivered carbon, certifying carbon complies with these Specifications.

2.2. EQUIPMENT

2.2.1. Carbon Adsorption System

Each carbon adsorption unit shall have a minimum operating capacity of 550 cfm.

Battery limits for the carbon adsorption system shall be defined as beginning at the influent connection for the system and ending with the effluent connection for the system as shown on the drawings. All equipment between these two points shall be provided as part of the complete design by the system supplier.

2.2.2. Adsorber Vessels

Each vessel shall be provided with a minimum of two lifting lugs.

2.2.3. Vessel Construction

Design, construct, and stamp vessel in accordance with ASME Code, Section VIII, for design pressure 125 psig at 150°F. Shell structure and supports shall be designed to meet AWWA D100 or AWWA D120 requirements for a water tank of equal volume. Corrosion resistant steel, fiberglass, or plastic shall be used for shell construction or the shell shall have a suitable corrosion resistant coating and lining system.

2.2.4. Sample Ports

The Contractor shall install one (1) sample port at the upstream of the VGAC units to sample and test the off gas for the parameters shown in Section \=01402=\ CHEMICAL QUALITY MANAGEMENT. The Contractor shall also install one (1) sample port at the downstream (effluent) of each VGAC units connected in parallel as shown on drawings for detection of the breakthrough for VGAC units. If the breakthrough is detected, then the granular activated carbon in both units in parallel shall be replaced. Sample ports shall be installed at an operable level.

2.2.5. Pressure Gauges

Each VGAC unit shall have a pressure gauge upstream and downstream from each unit (as shown on drawings) to monitor pressure drop through each unit. Pressure gauges shall be recommended by the VGAC manufacturer.

2.2.6. Adsorbers

The GAC systems, GAC piping, system skid, and all internals shall be included.

2.2.7. Piping and Valving

Influent, effluent, and interconnecting piping to the adsorbers shall be included. Valving and piping to allow placing the adsorbers in parallel or allowing both adsorbers to be operated independently. Valving shall be able to isolate any adsorber for carbon exchange operations or backwashing, and maintain operation through the remaining adsorber.

Provide piping and valving for following operating conditions, and in accordance with Drawings and approved piping submittals.

2.2.7.1. Normal Operation

Two carbon vessels in parallel shall be in operation continuously located downstream of each blower right after the heat exchanger.

2.2.7.2. Carbon Unit Exchange

Isolate adsorber being serviced to allow other adsorber to remain in service. Locate valves at locations accessible to operators.

2.3. GAC PIPING SYSTEM SKID

All piping, valving, fittings and appurtenances shall be contained on a single structural steel skid. The carbon adsorbers shall not be a part of the skid.

2.3.1. CONSTRUCTION

The skid shall consist of all vertical and horizontal support channels and cross-bracing necessary for supporting the entire unit.

2.3.2. OPERATING AREA

The skid shall include an operating area with room and locations on the superstructure for attachment of pressure gauges, differential pressure switches, and operating valves. The operating area shall also have a safety plate that is located in an area that is prominent and visible to the operator.

2.3.3. SHIPPING

All equipment items shall be installed on the structural steel skid and secured for shipment. Minor field connections shall be clearly noted, with any extra materials secured to, and shipped with the skid system.

PART 3. EXECUTION

3.1. PREPARATION

A reinforced concrete foundation pad, of the size and design recommended by the manufacturer, shall be installed in accordance with **SECTION \=03300A=\ CONCRETE FOR BUILDING CONSTRUCTION.**

3.2. EQUIPMENT INSTALLATION

Installation of all equipment items on the steel skid shall be performed in the manufacturer's factory under controlled conditions. The skid shall be installed in accordance with the manufacturer's written instructions.

3.3. PIPE, VALVES, FITTINGS AND APPURTENANCES

Installation of piping including cleaning, cutting, threading and jointing, shall be in accordance with Section \=15370=\ PROCESS PIPING AND APPURTENANCES. Differing metals shall be provided with isolation devices.

3.3.1. Strainers

Strainer heads and strainers shall be protected while concrete fill provided for support of the header-lateral-distributor head is being placed.

3.3.2. Heat Trace and Insulation

Exterior pipe and appurtenances shall be provided with an electrical heat trace and insulated in accordance with Section \=15250=\ THERMAL INSULATION FOR MECHANICAL SYSTEMS.

3.4. PAINTING/CORROSION PREVENTION

All ferrous surfaces shall be coated or painted to prevent corrosion.

3.4.1. Exterior Surfaces

Factory primed surfaces shall be solvent-cleaned before painting. Surfaces that have not been factory primed shall be prepared and primed in accordance with the paint manufacturer's recommendations. The paint system applied to the outside of the tank shall be in accordance with Section \=09900=\ PAINTING, GENERAL. Color shall be as indicated on the paint schedule or as otherwise approved.

3.4.2. Interior Surfaces

Tank interior surfaces shall be coated with the coating conforming to Section 3.2, 3.3, 3.4, 3.5, 3.6, or 3.7 of \-AWWA D102-\.

3.4.3. Touch-Up Painting

Factory painted items shall be touched up as needed. Factory painted items requiring touching up in the field shall be thoroughly cleaned of all foreign material, primed and top-coated with the manufacturer's standard factory finish.

3.4.4. Field Painting

Equipment which did not receive a factory finish shall be painted as specified in Section \=09900=\ PAINTING, GENERAL.

3.4.5. Corrosion Resistant Metals

Painting of corrosion resistant materials such as copper, brass, bronze, copper-nickel, and stainless steel is not required unless otherwise specified.

3.5. TESTS

3.5.1. Emission Sampling

Emission sampling shall be done periodically and analyses shall be conducted as specified in Section 01402: Chemical Quality Management.

3.5.2. Factory Tests

The carbon adsorption system shall be given a factory mechanical test to assure mechanical integrity. If the test indicates that adjustments are necessary to ensure conformance to the manufacturer's standards, such adjustments shall be made prior to shipment.

3.5.3. On-Site Tests

Upon completion and prior to acceptance of the installation, the Contractor shall furnish all equipment, instruments, materials, labor, and supervision required

for the tests specified. Water, electricity, and fuel required for testing shall be furnished by the Contractor, except as otherwise noted. All defects disclosed by the tests shall be rectified. All tests shall be made under the direction subject to the approval of the Contracting Officer. All testing done under this section shall be according to Section 01402: Chemical Quality Management. After installation of the carbon adsorption system is complete, operating tests shall be carried out to ensure that the installation operates properly. All tanks, ducts, and piping shall be pressure and leakage tested. If any deficiencies are revealed during any tests, such deficiencies shall be corrected and the systems retested. Tests shall be repeated until the system passes.

3.5.4. Pressure and Leakage Testing

Carbon columns shall be inspected and tested for structural integrity and leakage as systems or sections during construction but after erection, as work progresses in system. Pressure and leakage tests shall be at 50 percent in excess of system positive or negative total pressure. Leakage test procedure and apparatus shall be in accordance with SMACNA HVAC Air Duct Leakage Test Manual. Total leakage, prorated to length of duct under test, shall not exceed 1 percent of system capacity.

3.6. NONCOMPLIANCE WITH PERFORMANCE REQUIREMENTS

Removals shall meet or exceed those specified in the performance requirements of this specification. If at any time the results of the required analyses (defined by Section \=01402=\ CHEMICAL QUALITY MANAGEMENT) of the effluent air from the GAC system indicates that the GAC system is not in compliance with Contract Documents, flow through the GAC shall be stopped and the system shall be said to be inoperable. If at any time the operation of the GAC system does not meet the hydraulic, instrumentation, or control requirements set forth in this Contract, then flow through system shall be stopped and the system shall be said to be inoperable. The Contractor, upon notification of system non-compliance, shall immediately proceed to repair or modify the system or contact the equipment supplier if the GAC units are the service units so that it is in compliance with the Contract Documents. The Contractor shall notify the Contracting Officer one day before the GAC system is to be restarted and retested.

SECTION 11373
BLOWERS, AFTERCOOLERS, & CONTROLS

INDEX

1. NOT USED
2. GENERAL REQUIREMENTS
3. SUBMITTALS
4. DESCRIPTION
5. NOT USED
6. EQUIPMENT
7. MOTORS
8. CONTROLS
9. PAINTING
10. INSTALLATION

PART 1 - GENERAL

1. NOT USED.
2. GENERAL REQUIREMENTS:

2.1. STANDARD PRODUCTS: Material and equipment shall be the standard products of a manufacturer regularly engaged in the manufacture of such products and shall essentially duplicate equipment that has been in satisfactory operation at least two years prior to bid opening. Equipment shall be supported by a service organization that is, in the opinion of the Contracting Officer, reasonably convenient to the job site.

2.2. SAFETY REQUIREMENTS: Gears, couplings, projecting set-screws, keys and other rotating parts, so located that any person can come in close proximity thereto, shall be fully enclosed or properly guarded.

2.3. CONFORMANCE WITH AGENCY REQUIREMENTS: Where materials or equipment are specified to be an approved type, the seal or label of approval from a nationally recognized testing agency, adequately equipped and competent to perform such services, shall be attached thereto. A written certificate from the testing agency shall accompany the materials or equipment and shall be submitted to the Contracting Officer stating that the items have been tested and that they conform to the applicable requirements of the specifications and to the standards listed herein. The certificate shall indicate the methods of testing used by the testing agency. In lieu of a certificate from a testing agency, published catalog specification data, accompanied by the manufacturer's certified statement to the effect that the items are in accordance with the applicable requirements of the specifications and the referenced standards, will be considered by the Contracting Officer and may be acceptable as evidence that the items conform with agency requirements.

2.4. VERIFICATION OF DIMENSIONS: The Contractor shall become familiar with all details of the work, verify all dimensions in the field and shall advise the Contracting Officer of any discrepancy before performing the work.

2.5. SPARE PARTS DATA: After approval of the shop drawings, and not later than two months prior to the date of beneficial occupancy, the Contractor shall furnish spare parts data for each different item of materials and equipment specified. Data shall include a complete list of parts and supplies, with current unit prices and source of supply.

2.6. OPERATING AND MAINTENANCE INSTRUCTIONS:

2.6.1. Bound Instructions: Six complete sets of instructions containing the manufacturer's operating and maintenance instructions for each piece of equipment shall be furnished. Each set shall have a hard cover and be

in loose leaf form. One complete set shall be furnished at the time the tests procedure is submitted. Remaining sets shall be furnished before the contract is complete. The following identification shall be labeled on the covers: The words "OPERATING AND MAINTENANCE INSTRUCTION," name and location of the building, name of the Contractor, and the contract number. Flysheets shall be placed before instruction covering each subject. Instruction sheets shall be approximately 8-1/2 by 11 inches, with large sheets of drawings folded in. Instructions shall include, but not be limited to, the following:

2.6.2. System Layout showing piping, valves, and controls;

2.6.3. Approved wiring and control diagram;

2.6.4. A control sequence describing start-up, operation, and shutdown;

2.6.5. Operating and maintenance instructions for each piece of equipment, including lubrication instruction and trouble-shooting guide, also approved wiring and control diagrams showing the complete layout of the entire system, including equipment, piping valves, and control sequence,

2.6.6. Manufacturer's bulletins, cuts, and descriptive data; and parts list and recommended spare parts.

2.6.7. Field Instructions: Upon completion of the work and at a time designated by the Contracting Officer, the services of one or more competent engineers shall be provided by the Contractor for a period of not less than eight hours to instruct a representative of the Contracting Officer in the operation and maintenance of equipment furnished under this section of the specifications. These field instructions shall cover all the items contained in the bound instructions.

2.7. MANUFACTURER'S SERVICES: The Contractor shall obtain the services of a manufacturer's representative experienced in the installation, adjustment, and operation of the equipment specified. The representative shall supervise the installation, adjustment, and testing of the equipment. Up to two days of service shall be provided at no expense.

2.8. DELIVERY AND STORAGE: All equipment delivered and placed in storage shall be stored with protection from the weather, humidity and temperature variations, dirt and dust, or other contaminants.

2.9. MATERIALS AND EQUIPMENT shall be as specified below and as shown, and shall be suitable for the service intended. Materials and equipment shall be new and unused, except for tests. Where two or more pieces of equipment performing the same function are required, they shall be duplicate products of the same manufacturer.

3. SUBMITTALS. Contracting Officer approval is required for submittals with a "GA" designation; submittals having an "FIO" designation are for information only. The following shall be submitted in accordance with Section 01300 SUBMITTAL PROCEDURES:

SD-01 Data\

Blowers\; *GA*\

Aftercoolers\; *GA*\

Controls\; *GA*\

SD-04 Drawings\

Controls\; *GA*\

SD-19 Operations and Maintenance Manuals\

Blowers\; *GA*\.

Aftercoolers\; *GA*\

Controls\; *GA*\.

4. NOT USED.
5. NOT USED.

PART 2 - PRODUCTS

6. EQUIPMENT

6.1. *BLOWERS*\ The blowers shall have the capacity shown on the drawings and shall be similar or equal to "Rotron Model EN14 Explosion Proof Regenerative" and shall have an internal coating resistant to hydrogen sulfide. Coating type and thickness shall be recommended by the blower manufacturer. Blowers shall be provided with vibration isolation systems as recommended by the manufacturer.

6.2. *AFTERCOOLERS*\ The aftercoolers shall have the capacity shown on the drawings and shall be similar or equal to "Exact Changer Incorporated Model AA-150S" and shall have 304 stainless steel tubes with a minimum wall thickness of 0.035 inch. All parts of the aftercoolers which come in contact with the gas to be cooled shall have a coating which is resistant to hydrogen sulfide or shall be 304 stainless steel. Coating type and thickness shall be per paragraph: Blowers. Motor horse power shall not exceed 5 horsepower per aftercooler. Contractor shall provide motor operated dampers on the aftercoolers to allow for control of outlet gas temperature as indicated on the drawings. Dampers and motor operator shall be designed for outdoor service encountered in this project. Motor shall be explosion proof type.

7. MOTORS: Refer to SECTION: ELECTRICAL WORK.

8. CONTROLS: The Contractor shall provide all necessary control equipment to automatically start and stop the blower from a signal supplied from the flare flame controls. See SECTION: LANDFILL GAS FLARE SYSTEM. Provide controls to meet requirements of control logic diagram drawing. All control wiring shall be in metallic conduit. Submit complete wiring diagrams of all controls.

9. PAINTING: Blowers, aftercoolers, control panels and accessories shall be prepped, primed, and painted in accordance with the manufacturer's recommendations for the intended service.

PART 3 - EXECUTION

10. INSTALLATION:

10.1. Install equipment specified herein according to manufacturer's written instructions and approved submittals.

10.2. The manufacturer shall provide the service of an authorized representative to check the installation of the blowers, and instruct the Contractor in making any necessary adjustments, operating procedures.

* * * * * *

SECTION 13570
LANDFILL GAS FLARE SYSTEM

INDEX

1. APPLICABLE PUBLICATIONS
2. GENERAL REQUIREMENTS
3. SUBMITTALS
4. DESCRIPTION
5. FLARE SYSTEM
6. INSTALLATION
7. SEQUENCE OF CONTROL

PART 1 - GENERAL

1. APPLICABLE PUBLICATIONS: The publications listed below form a part of this specification to the extent referenced. The publications are referred to in the text by the basic designation only.

1.1. AMERICAN WELDING SOCIETY (AWS) STANDARD:
D1.1-94 Structural Welding Code - Steel

1.2. AMERICAN INSTITUTE OF STEEL CONSTRUCTION (AISC)
AISC Structural steel Design Publication, Latest Edition

2. GENERAL REQUIREMENTS:

2.1. STANDARD PRODUCTS: Material and equipment shall be the standard products of a manufacturer regularly engaged in the manufacture of such products and shall essentially duplicate equipment that has been in satisfactory operation at least two years prior to bid opening. Equipment shall be supported by a service organization that is, in the opinion of the Contracting Officer, reasonably convenient to the job site.

2.2. VERIFICATION OF DIMENSIONS: The Contractor shall become familiar with all details of the work, verify all dimensions in the field and shall advise the Contracting Officer of any discrepancy before performing the work.

2.3. SPARE PARTS DATA: After approval of the shop drawings, and not later than two months prior to the date of beneficial occupancy, the Contractor shall furnish spare parts data for each different item of materials and equipment specified. Data shall include a complete list of parts and supplies, with current unit prices and source of supply.

2.4. OPERATING AND MAINTENANCE INSTRUCTIONS:

2.4.1. Bound Instructions: Six complete sets of instructions containing the manufacturer's operating and maintenance instructions for each piece of equipment shall be furnished. Also include approved wiring and control diagrams showing the complete layout of the entire system, including equipment, piping valves, and control sequence Each set shall have a hard cover and material in loose leaf form. One complete set shall be furnished at the time the tests procedure is submitted. Remaining sets shall be furnished before the contract is complete. The following identification shall be labeled on the covers: The words "OPERATING AND MAINTENANCE INSTRUCTION," name and location of the project, name of the Contractor, and the contract number. Flysheets shall be placed before instruction covering each subject. Instruction sheets shall be approximately 8-1/2 by 11 inches, with large sheets of drawings folded in. Instructions shall include, but not be limited to, the following:

2.4.2. System Layout showing piping, valves, and controls;

2.4.3. Approved wiring and control diagram;

2.4.4. A control sequence describing start-up, operation, and shutdown;

2.4.5. Operating and maintenance instructions for each piece of equipment, including trouble-shooting guide;

2.4.6. Manufacturer's bulletins, cuts, and descriptive data; and parts list and recommended spare parts.

2.4.7. Field Instructions: Upon completion of the work and at a time designated by the Contracting Officer, the services of one or more competent engineers shall be provided by the Contractor for a period of not less than eight hours to instruct a representative designated by the Contracting Officer in the operation and maintenance of equipment furnished under this section of the specifications. These field instructions shall cover all the items contained in the bound instructions.

2.5. MANUFACTURER'S SERVICES: The Contractor shall obtain the services of a manufacturer's representative experienced in the installation, adjustment, and operation of the equipment specified. The representative shall supervise the installation, adjustment, and testing of the equipment.

2.6. DELIVERY AND STORAGE: All equipment delivered and placed in storage shall be stored with protection from the weather, humidity and temperature variations, dirt and dust, or other contaminants.

2.7. MATERIALS AND EQUIPMENT shall be as specified below and as shown, and shall be suitable for the service intended. Materials and equipment shall be new and unused. Where two or more pieces of equipment performing the same function are required, they shall be duplicate products of the same manufacturer.

3. SUBMITTALS. Approval is required for submittals with a "GA" designation; submittals having an "FIO" designation are for information only. The following shall be submitted in accordance with Section 01300 SUBMITTAL PROCEDURES:

SD-04 Drawings\

Flare System\; *GA*\.
Submit shop drawings, manufactures literature and materials of construction, to include foundation design for flare and automatic controls.

SD-01 Data\

Flame Arrestor\; *GA*\.
Submit product information and materials of construction.

Inlet Valve\; *GA*\.
Submit product information, materials of construction, dimensions and actuator electrical drawings.

Automatic Controls\; *GA*\.
Describe start-up, operation, and shutdown.

SD-19 Operations and Maintenance Manuals\

Flare and associated equipment and accessories\; *GA*\.

SD-09 Reports\

Test Reports\; *GA*\.

4. DESCRIPTION: Provide a packaged landfill gas flare system complete with accessories as specified herein and blower(s) as specified in SECTION: BLOWERS, AFTERCOOLERS, & CONTROLS.

PART 2 - PRODUCTS

5. *FLARE SYSTEM*\

5.1. DESIGN REQUIREMENTS: The flare system shall be designed for the following criteria:

5.1.1. LANDFILL GAS: Max. Flow Rate: 1100 SCFM
Min. Flow Rate: 200 SCFM
Pressure Drop: 6" WG maximum
BTU Content: 240 - 450 BTU/SCF (Typical)
Temperature of Gas: 110°F
Methane % range: 40 - 60%
Carbon Dioxide % range: 40 - 50%

5.1.2. UTILITIES: Electricity: See electrical drawings.

5.1.3. MECHANICAL DESIGN: Design Wind Speed 90 mph
Ambient Temperature -20 to 120°F
Electrical Area Hazardous

5.1.4. TURNDOWN: The rated flare turndown shall be 5.5:1 or greater. Flare gas flows between the max/min ranges are acceptable.

5.1.5. PILOT SYSTEM: The flare shall incorporate an intermittent propane pilot system with two storage tanks, a primary and a back-up, each having a capacity of 5.0 gallons. The flare control system shall switch from the primary tank to the back-up tank on indication of low pressure and give visual indication this has occurred. See SECTION: PILOT GAS PIPING SYSTEM for more requirements.

5.2. FLARE STACK: The flare stack shall be the enclosed type with a modular type, ceramic fiber refractory liner with an insulating value sufficient so the skin temperature will not exceed 200 deg F.

5.3. *FLAME ARRESTOR*\ The flare shall be equipped with an arrestor for protection of flare system against flame flashback. The flame arrestor shall be of all stainless steel construction.

5.4. *INLET VALVE*\ The flare shall be equipped with an inlet butterfly valve (butterfly valve #3) with an electric operated, fail-closed actuator, weather-proofed for outdoor applications. The spring return actuator shall automatically open and close upon receiving a signal from the flare manufacturer's control panel. See Paragraph: Automatic Controls.

5.5. AUTOMATIC IGNITION: The automatic pilot/relight ignition panel shall provide for automatic remote ignition of the flare pilot using propane ignition gas along with 24 to 120 V electricity. The pilot propane fuel line

shall be equipped with a solenoid valve capable of activating/deactivating the fuel gas to the pilot based upon the signal from sensor.

5.6. *AUTOMATIC CONTROLS*\ A control panel and all necessary equipment shall be provided that controls the automatic ignition, inlet valve, and auto blower start and stop operations. Also refer to the control logic diagram drawings and SECTION: \-11373-\ BLOWERS, AFTERCOOLERS, & CONTROLS. Motor operated butterfly valve #3 shall be controlled as recommended by the manufacturer of the flare. Submit control wiring diagram with sequence.

5.7. FLARE FOUNDATION: Flare foundation shall be as required by the flare manufacturer and the Contractor shall coordinate.

5.8. PAINTING: Flare and accessories shall be prepped, primed and painted in accordance with manufacturers written instruction and approved submittals.

5.9. STRUCTURAL STEEL: AISC Publication, Structural Steel Design - latest edition.

5.10. WELDING: AWS Publication - D1.1

5.11. NOISE LIMITATION: The flare shall not emit more than 80 decibels noise measured at a distance of 20 feet.

PART 3 - EXECUTION

6. INSTALLATION:

6.1. The equipment specified herein shall be installed according to manufacturers written instruction and approved submittals. The manufacturer shall provide the service of an authorized representative to check the installation of the flare and instruct the contractor in making any necessary adjustments and in operating procedures.

6.2. Field Testing: After the equipment installation is complete, operating tests shall be performed to assure that each unit operates properly. If any deficiencies are revealed during the tests, such deficiencies shall be corrected and the tests run again.

6.3. The flare and pilots shall be pressure/operational tested prior to shipment.

* * * * * *

SECTION 15250

THERMAL INSULATION FOR MECHANICAL SYSTEMS
07/89

INDEX

PART 1 GENERAL
- 1.1. REFERENCES
- 1.2. SYSTEM DESCRIPTION
- 1.3. GENERAL QUALITY CONTROL
- 1.4. SUBMITTALS
- 1.5. STORAGE

PART 2 PRODUCTS
- 2.1. GENERAL MATERIALS
- 2.2. PIPE INSULATION MATERIALS
- 2.3. EQUIPMENT INSULATION MATERIALS

PART 3 EXECUTION
- 3.1. APPLICATION - GENERAL
- 3.2. PIPE INSULATION INSTALLATION
- 3.3. EQUIPMENT INSULATION INSTALLATION

SECTION 15250

THERMAL INSULATION FOR MECHANICAL SYSTEMS
07/89

PART 1. GENERAL

1.1. REFERENCES

The publications listed below form a part of this specification to the extent referenced. The publications are referred to in the text by basic designation only.

AMERICAN SOCIETY FOR TESTING AND MATERIALS (ASTM)

\-ASTM A 167-\	(1993) Stainless and Heat-Resisting Chromium-Nickel Steel Plate, Sheet, and Strip
\-ASTM A 580-\	(1993) Stainless and Heat Resisting Steel Wire
\-ASTM A 641-\	(1992) Zinc-Coated (Galvanized) Carbon Steel Wire
\-ASTM B 209-\	(1992a) Aluminum and Aluminum-Alloy Sheet and Plate
\-ASTM C 195-\	(1990) Mineral Thermal Insulating and Cement
\-ASTM C 449-\	(1988) Mineral Fiber Hydraulic-Setting Thermal Insulating and Finishing Cement
\-ASTM C 552-\	(1991) Cellular Glass Thermal Insulation
\-ASTM C 553-\	(1992) Mineral Fiber Blanket Thermal Insulation for Commercial and Industrial Applications
\-ASTM C 612-\	(1993) Mineral Fiber Block and Board Thermal Insulation
\-ASTM C 795-\	(1992) Thermal Insulation for Use in Contact With Austenitic Stainless Steel
\-ASTM C 647-\	(1989a) Properties and Tests of Mastics and Coating Finishes for Thermal Insulation
\-ASTM C 920-\	(1987) Elastomeric Joint Sealants
\-ASTM C 921-\	(1989) Determining the Properties of Jacketing Materials for Thermal Insulation

\-ASTM D 3278-\	(1989) Test Methods for Flash Point of Liquids by Setaflash Closed-Cup Apparatus
\-ASTM E 84-\	(1994) Surface Burning Characteristics of Building Materials
\-ASTM E 96-\	(1994) Water Vapor Transmission of Materials

FEDERAL SPECIFICATIONS (FS)

\-FS L-P-535-\	(Rev E; Notice 2) Plastic Sheet (Sheeting): Plastic Strip: Poly(Vinyl Chloride) and Poly(Vinyl Chloride-Vinyl Acetate), Rigid

MANUFACTURERS STANDARDIZATION SOCIETY OF THE VALVE AND FITTINGS INDUSTRY (MSS)

\-MSS SP-69-\	(1991) Pipe Hangers and Supports - Selection and Application

MIDWEST INSULATION CONTRACTORS ASSOCIATION (MICA)

\-MICA-01-\	(1993) National Commercial & Industrial Insulation Standards

NATIONAL FIRE PROTECTION ASSOCIATION (NFPA)

\-NFPA 90A-\	(1993) Installation of Air Conditioning and Ventilating Systems

UNDERWRITERS LABORATORIES (UL)

\-UL 723-\	(1993; Rev Apr 1994) Test for Surface Burning Characteristics of Building Materials

1.2. SYSTEM DESCRIPTION

Field-applied insulation and accessories on mechanical systems shall be as specified herein; factory-applied insulation is specified under the piping, duct or equipment to be insulated.

1.3. GENERAL QUALITY CONTROL

1.3.1. Standard Products

Materials shall be the standard products of manufacturers regularly engaged in the manufacture of such products and shall essentially duplicate items that have been in satisfactory use for at least 2 years prior to bid opening.

1.3.2. Installer's Qualifications

Qualified installers shall have successfully completed three or more similar type jobs within the last 5 years.

1.3.3. Surface Burning Characteristics

Unless otherwise specified, insulation not covered with a jacket shall have a flame spread rating no higher than 75 and a smoke developed rating no higher than 150. Flame spread and smoke developed ratings shall be determined by \-ASTM E 84-\. Insulation shall be tested in the same density and installed thickness as the material that shall be used in the actual construction. Jackets shall comply with the flame spread and smoke developed ratings required by \-ASTM C 921-\.

1.3.4. Identification of Materials

Packages or standard containers of insulation, jacket material, cements, adhesives, and coatings delivered for use, and samples required for approval shall have manufacturer's stamp or label attached giving the name of the manufacturer and brand, and a description of the material.

1.4. SUBMITTALS

Approval is required for submittals with a "GA" designation; submittals having an "FIO" designation are for information only. The following shall be submitted in accordance with Section \=01300=\ SUBMITTAL PROCEDURES:

SD-01 Data\

Adhesives\; *GA*\

Contact Adhesive\; *GA*\

Jackets\; *GA*\

Vapor Barrier Coating\; *GA*\

Pipe Insulation Materials\; *GA*\

Duct Insulation Materials\; *GA*\

Equipment Insulation Materials\; *GA*\

A complete list of materials, including manufacturer's descriptive and technical literature, performance data, catalog cuts, and installation instructions. Materials furnished under this section of the specification shall be submitted at one time. A schedule indicating the product number, k-value, thickness and furnished accessories for each mechanical system requiring insulation shall be included.

SD-14 Samples\

Thermal Insulation Materials\; *GA*\.

A display of insulated sections as specified in this section, after approval of materials and prior to insulating any piping or ductwork. Each material used shall be identified, by indicating on an attached sheet the specification requirement for the material and the material by each manufacturer intended to meet the requirement. Display sample sections will be inspected at the jobsite by the Contracting Officer. Approved display sample sections shall remain on display at the jobsite during the construction period. Upon completion of construction, the display sample sections will be returned to the Contractor.

Pipe Insulation Display Sections: Display sample sections shall include as a minimum an elbow or tee, a valve, dielectric unions and flanges, a hanger with protection shield and insulation insert, or dowel as required, at support point, method of fastening and sealing insulation at longitudinal lap, circumferential lap, butt joints at fittings and on pipe runs, and terminating points for each type of pipe insulation used on the job, and for hot pipelines and cold pipelines, both interior and exterior, even when the same type of insulation is used for these services.

Duct Insulation Display Sections: Display sample sections for rigid and flexible duct insulation used on the job. A display section for duct insulation exposed to weather.

SD-18 Records\

Thermal Insulation Materials\; *GA*\.

Three copies of a booklet indicating the types of insulation by referencing \-MICA-01-\, at the jobsite. After approval of materials and prior to insulating any equipment, a booklet shall be prepared and submitted for approval which contains marked-up \-MICA-01-\ plates or detail drawings showing the insulation material and insulating system for each type of equipment which is required to be insulated per paragraph EQUIPMENT INSULATION INSTALLATION. The MICA plates shall be modified, where necessary, to show the materials to be installed in accordance with the requirements of this specification for the specific insulation application. The Contractor shall submit all MICA Plates required to show the entire insulating system, including Plates required to show insulation penetrations, vessel bottom and top heads, legs, and skirt insulation as applicable. The MICA plates shall be modified in a neat and readable manner. Drawings that do not clearly reflect all details of the work to be performed will not be accepted. If the Contractor elects to submit detailed drawings instead of marked-up MICA Plates, the detail drawings shall show cut-away, section views, and details indicating each component of the insulation system and showing provisions for insulating jacketing, and sealing portions of the equipment. The drawings shall be labeled with a description of each material type with materials and insulating systems, in accordance with this specification. Each material and insulating system that is used shall be identified by indicating the specification requirement for the material, and the material by each manufacturer that is intended to meet the requirement. Three copies of the booklet shall be submitted at the jobsite to the Contracting Officer. One copy of the approved booklet shall remain with the display sample and two copies shall be provided.

1.5. STORAGE

Materials shall be delivered in the manufacturer's unopened containers. Materials delivered and placed in storage shall be provided with protection from weather, humidity, dirt, dust and other contaminants by the Contractor. Insulation material and supplies that become dirty, dusty, wet, or otherwise contaminated may be rejected by the Contracting Officer.

PART 2. PRODUCTS

2.1. GENERAL MATERIALS

Materials shall be compatible and shall not contribute to corrosion, soften, or otherwise attack surfaces to which applied in either the wet or dry state. Materials to be used on stainless steel surfaces shall meet \-ASTM C 795-\ requirements. Materials shall be asbestos free and conform to the following:

2.1.1. Adhesives

2.1.1.1. Mineral Fiber Insulation Cement

Cement shall be in accordance with \-ASTM C 195-\.

2.1.1.2. Contact Adhesive

Adhesive shall be Type II, Class 1 or Type II.

2.1.1.3. Lagging Adhesive

Lagging adhesives shall be nonflammable, fire-resistant in accordance with \-NFPA 90A-\, \-UL 723-\, and \-ASTM E 84-\. Adhesives shall be either the Class 1 or Class 2 type. Class 1 adhesive shall be pigmented white red and be suitable for bonding fibrous glass cloth to faced and unfaced fibrous glass insulation board; for bonding cotton brattice cloth to faced and unfaced fibrous glass insulation board; for sealing edges of and bounding fibrous glass tape to joints of fibrous glass board; or for bonding lagging cloth to thermal insulation. Class 2 adhesive shall be pigmented white and be suitable for attaching fibrous glass insulation to metal surfaces. Lagging adhesives shall be applied in strict accordance with the manufacturer's recommendations.

2.1.2. Contact Adhesive

Adhesive may be dispersed in a nonhalogenated organic solvent with a low flash point (flash point plus or minus 25 degrees F) or, dispersed in a nonflammable organic solvent which shall not have a fire point below 200 degrees F. The adhesive shall not adversely affect, initially or in service, the insulation to which it is applied, nor shall it cause any corrosive effect on metal to which it is applied. Any solvent dispersing medium or volatile component of the adhesive shall have no objectionable door and shall not contain any benzene or carbon tetrachloride. The dried adhesive shall not omit nauseous, irritating, or toxic volatile matters or aerosols when the adhesive is heated to any

temperature up to 2.2 degrees F. The adhesive shall be nonflammable, fire resistant conforming to \-ASTM E 84-\.

2.1.3. Caulking

\-ASTM C 920-\, Type S, Grade NS, Class 25, Use A.

2.1.4. Corner Angles

Nominal 0.016 inch aluminum 1 by 1 inch with factory applied kraft backing. Aluminum shall be \-ASTM B 209-\, Alloy 3003, 3105, or 5005.

2.1.5. Finishing Cement

Mineral fiber hydraulic-setting thermal insulating cement \-ASTM C 449-\.

2.1.6. Glass Tape

Glass tape shall meet the requirements of \-UL 723-\ and \-ASTM E 84-\.

2.1.6.1. Plain Weave, Untreated

The ends shall be properly interlocked with the picks to ensure that there shall be no raveling of the tape edges. It shall have an average weight of 5.8 plus or minus 10 percent ounces per square yard, an average thickness of 0.007 plus or minus 0.001 inches, warp ends/wales of 42 plus or minus 2 per inch or filling picks/courses of 32 plus or minus 2 per inch, a minimum breaking strength of 150 pounds per inch of width, and after heating to 900 degrees F for 2 hours a minimum breaking strength of 40 pounds per inch of width.

2.1.6.2. Knitted, Untreated

The wales shall be properly interlocked with the courses to ensure that there shall be no raveling of the tape edges. It shall have an average weight of 4.5 plus or minus 10 percent ounces per square yard, an average thickness of 0.007 plus or minus 0.001 inches, warp end/wales of 16 plus or minus 2 per inch, a minimum breaking strength of 40 pounds per inch of width, and after heating to 900 degrees F for 2 hours a minimum breaking strength of 21 pounds per inch of width.

2.1.6.3. Distortion Requirements

There shall be no distortion of the tape when a sample 24 inches in length is spread across a flat horizontal surface and observed for evidence of distortion (such as tendency to curl rather than lie flat). The width tolerance is plus or minus 1/8 inch.

2.1.7. Staples

Outward clinching type \-ASTM A 167-\, Type 304 or 316 stainless steel.

2.1.8. Jackets

\-ASTM C 921-\, Type I, moisture vapor transmission maximum 0.02 perms, puncture resistance minimum 50 Beach units on all surfaces except concealed ductwork, where a minimum puncture resistance of 25 Beach units is allowable, tensile strength minimum 35 pound/inch width; Type II, puncture resistance minimum 25 Beach units, tensile strength minimum 20 pound/inch width. Aluminum jackets shall be corrugated, embossed or smooth sheet, 0.016 inch nominal thickness; \-ASTM B 209-\, Temper H14, Temper H16, Alloy 3003, 5005, or 3105 with factory applied moisture barrier. Corrugated aluminum jacket shall not be used outdoors. Aluminum jacket securing bands shall be Type 304 stainless steel, 0.015 inch thick, 1/2 inch wide for pipe under 12 inch diameter and 3/4 inch wide for pipe over 12 inch diameter. Aluminum jacket circumferential seam bands shall be 2 by 0.016 inch aluminum matching jacket material. Bands for insulation belowground shall be 3/4 by 0.020 inch thick stainless steel, or fiberglass reinforced tape. The jacket may, at the option of the Contractor, be provided with a factory fabricated Pittsburg or "Z" type longitudinal joint. When the "Z" joint is used, the bands at the circumferential joints shall be designed by the manufacturer to seal the joints and hold the jacket in place. Polyvinyl chloride (PVC) jacket and fitting covers shall be \-FS L-P-535-\, Composition A, Type II, with minimum thickness 0.020 inch. Insulation under PVC jacket shall meet jacket manufacturer's written recommendations.

2.1.9. Vapor Barrier Coating

The vapor barrier coating shall be fire and water resistant and appropriately selected for either outdoor or indoor service. Color shall be white. The water vapor permeance of the compound shall not exceed 0.05 perm and shall be determined according to procedure B of \-ASTM E 96-\ utilizing apparatus described in \-ASTM E 96-\. The coating shall be a nonflammable, fire resistant type conforming to \-ASTM E 84-\, \-NFPA 90A-\, and \-UL 723-\. The flash point of the compound shall not be less than 80 degrees F and shall be determined in accordance with \-ASTM D 3278-\. All other application and service properties shall be in accordance with \-ASTM C 647-\.

2.1.10. Wire

Soft annealed \-ASTM A 580-\ Type 302, 304 or 316 stainless steel, 16 or 18 gauge. Soft annealed galvanized wire, \-ASTM A 641-\, 16 gauge.

2.2. PIPE INSULATION MATERIALS

Pipe insulation materials shall be as follows:

2.2.1. Belowground Pipeline Insulation

\-ASTM C 552-\, Type II.

2.3. EQUIPMENT INSULATION MATERIALS

Equipment insulation materials shall be as follows:

2.3.1. Equipment Insulation

2.3.1.1. Rigid Mineral Fiber

\-ASTM C 612-\, Class 2, 3, 4 or 5 as required for temperature encountered to 1800 degrees F.

2.3.1.2. Flexible Mineral Fiber

\-ASTM C 553-\, Type I, Class B-4 to 400 degrees F.

PART 3. EXECUTION

3.1. APPLICATION - GENERAL

3.1.1. Installation

Except as otherwise specified, material shall be installed in accordance with the manufacturer's written instructions. Insulation materials shall not be applied until tests and heat tracing specified in other sections of this specification are completed. Material such as rust, scale, dirt and moisture shall be removed from surfaces to receive insulation. Insulation shall be kept clean and dry. Insulation shall not be removed from its shipping containers until the day it is ready to use and shall be returned to like containers or equally protected from dirt and moisture at the end of each workday. Insulation that becomes dirty shall be thoroughly cleaned prior to use. If insulation becomes wet or if aforementioned cleaning does not restore the surfaces to like new condition, the insulation may be rejected, and if rejected, shall be immediately removed from the jobsite. Joints shall be staggered on multilayer insulation. Mineral fiber thermal insulating cement shall be mixed with demineralized water when used on stainless steel surfaces. Insulation, jacketing and accessories shall be installed in accordance with \-MICA-01-\ standard plates except where modified herein or on the drawings.

3.1.2. Painting and Finishing

Painting shall be as specified in Section \=09900=\ PAINTING, GENERAL.

3.1.3. Welding

No welding shall be done on piping, duct or equipment without written approval of the Contracting Officer. The capacitor discharge welding process may be used for securing metal fasteners to duct.

3.2. PIPE INSULATION INSTALLATION

3.2.1. Pipe Insulation

3.2.1.1. General

Pipe insulation shall be continuous and installed on fittings and appurtenances unless specified otherwise. Installation shall be with full length units of

insulation and using a single cut piece to complete a run. Cut pieces or scraps abutting each other shall not be used.

3.2.1.2. Pipes Passing Through Sleeves (and Prepared Openings)

a. Pipe insulation shall be continuous through the sleeve or opening.

b. An aluminum jacket with factory applied moisture barrier shall be provided over the insulation wherever penetrations require sealing.

c. Where penetrating floors, the aluminum jacket shall extend from a point below the backup material to a point 10 inches above the floor with one band at the floor and one not more than 1 inch from the end of the aluminum jacket.

3.2.1.3. Pipes Passing Through Hangers

a. Insulation, whether hot or cold application, shall be continuous through hangers. All horizontal pipes 2 inches and smaller shall be supported on hangers with the addition of a Type 40 protection shield to protect the insulation in accordance with \-MSS SP-69-\. Whenever insulation shows signs of being compressed, or when the insulation or jacket shows visible signs of distortion at or near the support shield, insulation inserts as specified below for piping larger than 2 inches shall be installed.

b. Horizontal pipes larger than 2 inches at 60 degrees F and above shall be supported on hangers with the addition of a Type 39 saddle in accordance with \-MSS SP-69-\.

c. Horizontal pipes larger than 2 inches below 60 degrees F shall be supported on hangers with the addition of a Type 40 protection shield in accordance with \-MSS SP-69-\. An insulation insert of cellular glass or calcium silicate shall be installed above each shield. The insert shall cover not less than the bottom 180 degree arc of the pipe. Inserts shall be the same thickness as the insulation, and shall extend 2 inches on each end beyond the protection shield. When insulation inserts are required per the above, and the insulation thickness is less than 1 inch, wooden or cork dowels or blocks may be installed between the pipe and the shield to prevent the weight of the pipe from crushing the insulation as an option to installing insulation inserts. The insulation jacket shall be continuous over the wooden dowel, wooden block, or insulation insert.

d. Vertical pipes shall be supported with either Type 8 or Type 42 riser clamps with the addition of two Type 40 protection shields in accordance with \-MSS SP-69-\ covering the 360 degree arc of the insulation. An insulation insert of cellular glass or calcium silicate shall be installed between each shield and the pipe. The insert shall cover the 360 degree arc of the pipe. Inserts shall be the same thickness as the insulation, and shall extend 2 inches on each end beyond the protection shield. When insulation inserts are required per the above, and the insulation thickness is less than 1 inch, wooden or cork dowels or blocks may be installed between the pipe and the shield to prevent the hanger from crushing the insulation as an option instead of installing insulation inserts. The insulation jacket shall be continuous over the wooden

dowel, wooden block, or insulation insert. The verticle weight of the pipe shall be supported with hangers located in a horizontal section of the pipe. When the pipe riser is longer than 30 feet, the weight of the pipe shall be additionally supported hangers in the vertical run of the pipe which are directly clamped to the pipe, penetrating the pipe insulation. These hangers shall be insulated and the insulation jacket sealed as indicated herein for anchors in a similar service.

e. The length of the insulation insert shall be determined by Table 5 of \-MSS SP-69-\ regardless of compressive strength of the insulation or insert material. Inserts shall be covered with a jacket material of the same appearance and quality as the adjoining pipe insulation jacket, shall overlap the adjoining pipe jacket 1-1/2 inches, and shall be sealed as required for the pipe jacket. The jacket material used to cover inserts in flexible cellular insulation shall conform to \-ASTM C 921-\, Type 1, and is allowed to be of a different material than the adjoining insulation material.

3.2.2. Aboveground Pipelines

3.2.2.1. Insulation Thickness

Insulation thickness shall be determined using the manufacturer's published thermal conductivity k, and TABLE III below.

TABLE III

REQUIRED THICKNESS (IN INCHES) OF PIPE INSULATION FOR PIPES TO 450 DEGREES F

k = thermal conductivity (average) Btu/hr. sq. ft. degree/in. thickness at a mean temperature of 75 degrees F

Thermal conductivity k	Pipe Size, Inches						
	2 or less	2-1\2 to 3	4	5	8	10	12
0.25	2.0	2.5	2.5	3.5	3.5	3.5	3.5
0.30	2.0	2.5	2.5	3.5	3.5	3.5	3.5
0.35	3.0	3.5	3.5	4.0	4.0	4.0	4.0
0.40	3.5	4.0	4.0	4.5	4.5	4.5	4.5
0.45	4.5	5.0	5.0	5.5	5.5	5.5	5.5

3.2.2.2. Jacket for Insulated Pipe

Insulation shall be covered with a factory applied Type II jacket or field applied aluminum where required or seal welded PVC.

3.2.2.3. Insulation for Straight Runs

a. Insulation shall be applied to the pipe with joints tightly butted.

b. Longitudinal laps of the jacket material shall overlap not less than 1-1/2 inches, and butt strips 3 inches wide shall be provided for circumferential joints.

c. Laps and butt strips shall be secured with adhesive and stapled on 4 inch centers if not factory self-sealing. Adhesive may be omitted where pipe is concealed.

d. Factory self-sealing lap systems may be used when the ambient temperature is between 40 degrees and 120 degrees F and shall be installed in accordance with manufacturer's instructions. Laps and butt strips shall be stapled whenever there is nonadhesion of the system. Where gaps occur, the section shall be replaced or the gap repaired by applying adhesive under the lap and then stapling.

e. Breaks and punctures in the jacket material shall be patched by wrapping a strip of jacket material around the pipe and be secured with adhesive and stapled on 4 inch centers if not factory self-sealing. Adhesive may be omitted where pipe is concealed. Patch shall extend not less than 1-1/2 inches past the break.

3.2.2.4. Insulation for Fittings and Accessories

a. The run of the line pipe insulation shall have the ends brought up to the item.

b. Insulation of the same thickness and conductivity as the adjoining pipe insulation, either premolded or segmented, shall be placed around the item abutting the adjoining pipe insulation, or if nesting size insulation is used, overlapping 2 inches or one pipe diameter. Loose fill mineral fiber or insulating cement shall be used to fill the voids. Insulation for elbows less than 3 inch size shall be premolded. Insulation for elbows 3 inch size and larger shall be either premolded or segmented. Elbows insulated using segments shall have not less than 3 segments per elbow. Insulation may be wired or taped on until finish is applied.

c. Upon completion of installation of insulation on flanges, unions, valves, anchors, fittings and accessories, terminations and insulation not protected by factory vapor barrier jackets or PVC fitting covers shall be protected with two coats of Class 1 adhesive applied with glass tape embedded between coats. Tape seams shall overlap 1 inch. Adhesive shall extend onto the adjoining insulation not less than 2 inches. The total dry film thickness shall be not less than 1/16 inch.

d. Insulation terminations shall be tapered to unions at a 45-degree angle.

e. At the option of the Contractor, factory premolded one- or two-piece PVC fitting covers may be used in lieu of the adhesive and embedded glass tape. Factory premolded segments or factory or field cut blanket insert insulation segments shall be used under the cover and shall be the same thickness as

adjoining pipe insulation. The covers shall be secured by PVC vapor barrier tape, adhesive, seal-welding or with tacks made for securing PVC covers.

3.2.3. Piping Aboveground

Piping aboveground shall be insulated and jacketed as specified. After this procedure, an aluminum jacket shall be applied. PVC jacketing requires no factory applied jacket beneath it.

3.2.3.1. Aluminum Jacket

The jacket may be factory applied. The jacket shall overlap not less than 2 inches at longitudinal and circumferential joints and shall be secured with bands at not more than 12 inch centers. Longitudinal joints shall be overlapped down to shed water and located at 4 or 8 o'clock positions. Joints on piping shall be sealed with caulking while overlapping to prevent moisture penetration. Where jacketing on piping abuts an uninsulated surface, joints shall be caulked to prevent moisture penetration.

3.2.3.2. Insulation for Fittings

Flanges, unions, valves, fittings, and accessories shall be insulated and finished as specified for the applicable service. Two coats of an emulsion type weatherproof mastic recommended by the insulation manufacturer shall be applied with glass tape embedded between coats. Tape overlaps shall be not less than 1 inch and the adjoining aluminum jacket not less than 2 inches. Factory preformed aluminum jackets may be used in lieu of the above. Molded PVC fitting covers shall be used with PVC lagging and adhesive welded moisture tight.

3.2.3.3. PVC Lagging

PVC lagging shall be ultraviolet resistant and adhesive welded vapor tight with manufacturer's recommended adhesive. Installation shall include provision for thermal expansion.

3.2.4. Belowground Pipe Insulation

The following shall be included:

a. Condensate Piping to the top of the underground condensate tank.

3.2.4.1. Type of Insulation

Belowground pipe shall be insulated with 3 inch cellular glass insulation set in a coat of bedding compound as recommended by the manufacturer.

3.2.4.2. Installation of Belowground Pipe Insulation

a. Bore surfaces of the insulation shall be coated with a thin coat of gypsum cement of a type recommended by the insulation manufacturer. Coating

thickness shall be sufficient to fill surface cells of insulation. Mastic type materials shall not be permitted for this coating.

b. Insulation applied to the pipe shall have joints tightly butted and bedded together with bedding compound as recommended by the manufacturer. Butt joints shall be staggered.

c. Stainless steel bands, 3/4 inch wide by 0.020 inch thick shall be used to secure insulation in place. A minimum of two bands per section of insulation shall be applied. As an alternate, fiberglass reinforced tape may be used to secure insulation on piping up to 12 inches in diameter. A minimum of two bands per section of insulation shall be applied.

d. Insulation shall terminate at anchor blocks but shall be continuous through sleeves and manholes.

f. Provision for expansion and contraction shall be made in accordance with the insulation manufacturer's recommendations.

g. Flanges, couplings, valves, and fittings shall be insulated with factory premolded, prefabricated, or field-fabricated sections of insulation of the same material and thickness as the adjoining pipe insulation. Insulation sections shall be secured in place with wire, bore surfaces coated, and joints sealed as specified.

h. Insulation, including fittings, shall be finished with three coats asphaltic mastic, with 10 by 10 glass mesh reinforcing fabric embedded between coats. Fabric shall be overlapped a minimum of 2 inches at joints. Total film thickness shall be a minimum of 3/16 inch. As an alternate, a prefabricated bituminous laminated jacket, reinforced with 10 by 10-glass fiber mesh, shall be applied to the insulation. Jacketing material and application procedures shall match manufacturer's written instructions.

i. At termination points, other than building entrances, the mastic and cloth or tape shall cover the ends of insulation and extend 2 inches along the bare pipe.

3.3. EQUIPMENT INSULATION INSTALLATION

3.3.1. General

Removable insulation sections shall be provided to cover parts of equipment which must be opened periodically for maintenance including vessel covers, fasteners, flanges and accessories. Equipment insulation shall be omitted on the following:

a. Blowers.

b. Aftercoolers.

c. Flare.

d. Propane tanks.

3.3.2. Insulation for Equipment

3.3.2.1. Insulation Thickness

Insulation shall be suitable for the temperature encountered. Insulation shall be 3-1/2 inch thick material.

3.3.2.2. Insulation of Equipment

a. Insulation shall be formed or fabricated to fit the equipment. To ensure a tight fit on round equipment, edges shall be beveled and joints shall be tightly butted and staggered.

b. Insulation shall be secured in place with bands or wires at intervals as recommended by the manufacturer but not greater than 12 inch centers except flexible cellular which shall be adhered. Insulation corners shall be protected under wires and bands with suitable corner angles.

c. Cellular glass insulation shall be set in a coating of bedding compound as recommended by the manufacturer, and joints shall be sealed with bedding compound. Mineral fiber joints shall be filled with finishing cement.

d. Insulation on heads of heat exchangers shall be removable. The removable section joint shall be fabricated using a male-female shiplap type joint. Entire surface of the removable section shall be finished as specified.

e. Exposed insulation corners shall be protected with corner angles.

f. On equipment with ribs such as boiler flue gas connection, draft fans, and fly ash or soot collectors, insulation shall be applied over 6 by 6 inches by 12 gauge welded wire fabric which has been cinched in place, or if approved by the Contracting Officer, spot welded to the equipment over the ribs. Insulation shall be secured to the fabric with J-hooks and 2 by 2 inches washers or shall be securely banded or wired in place on 12 inch (maximum) centers.

h. Upon completion of installation of insulation, penetrations shall be caulked. Two coats of Class I adhesive shall be applied over insulation, including removable sections, with a layer of glass cloth embedded between the coats. The total dry thickness of the finish shall be 1/16 inch. Caulking shall be applied to parting line between equipment and removable section insulation.

SECTION 15350
FLARE PILOT GAS PIPING SYSTEM

INDEX

1. APPLICABLE PUBLICATIONS
2. GENERAL REQUIREMENTS
3. SUBMITTALS
4. PIPE AND FITTING
5. VALVES
6. PIPE HANGERS AND SUPPORTS
7. PRESSURE REGULATORS
8. MATERIALS AND EQUIPMENT
9. EXCAVATION AND BACKFILLING
10. GAS PIPING SYSTEM
11. PROTECTIVE COVERING
12. INSTALLATION
13. PIPE JOINTS
14. SHUTOFF VALVES
15. SPECIAL REQUIREMENTS
16. PIPING SUPPORTS
17. TESTING
18. PROPANE STORAGE TANK

PART 1 - GENERAL

1. APPLICABLE PUBLICATIONS: The publications listed below form a part of this specification to the extent referenced. The publications are referred to in the text by the basic designation only.

1.1. Not Used.

1.2. AMERICAN GAS ASSOCIATION (AGA) PUBLICATION.
Directory of Certified Appliances and Accessories (January 1, 1987, and Monthly Supplemental Directories)

1.3. AMERICAN NATIONAL STANDARDS INSTITUTE (ANSI) PUBLICATIONS.

B1.20.1-1983	Pipe Threads, General Purpose (Inch)
B16.3-1985	Malleable Iron Threaded Fittings Class 150 and 300
B16.5-1981	Pipe Flanges and Flanged Fittings
B16.9-1986	Factory-Made Wrought Steel Buttwelding Fittings
B16.11-1980	Forged Steel Fittings, Socket-Welding and Threaded
B16.21-1978	Nonmetallic, Flat Gaskets for Pipe Flanges
B16.33-1981	Manually Operated Metallic Gas Valves for Use in Gas Piping Systems Up to 125 psig (Sizes 1/2 through 2)
B31.2-1968	Fuel Gas Piping
B36.10-1979	Welded and Seamless Wrought Steel Pipe
Z223.1-1984	National Fuel Gas Code

1.4. AMERICAN SOCIETY FOR TESTING AND MATERIALS (ASTM) PUBLICATIONS.

A 539-85	Electric-Resistance-Welded Coiled Steel Tubing for Gas and Fuel Oil Lines

1.5. AMERICAN SOCIETY OF MECHANICAL ENGINEERS (ASME) PUBLICATIONS.

Section IX	Welding and Brazing Qualifications (1986; Addenda: Winter 1986)

1.6. THE MANUFACTURERS STANDARDIZATION SOCIETY OF THE VALVE AND FITTINGS INDUSTRY (MSS) PUBLICATIONS.

SP-25	Standard Marking System for Valves, Fittings, Flanges and Unions (1978; Rev 1983)
SP-58	Pipe Hangers and Supports - Materials, Design

and Manufacture (1983)

SP-69 Pipe Hangers and Supports - Selection and Application (1983)

1.7. UNDERWRITERS LABORATORIES INC. (UL) PUBLICATION.
Gas and Oil Equipment Directory (Mar 1987)

2. GENERAL REQUIREMENTS:

2.1. WELDING. Piping shall be welded in accordance with qualified procedures using performance qualified welders and welding operators. Procedures and welders shall be qualified in accordance with Section IX, ASME Boiler and Pressure Vessel Code. Previously qualified welding procedures qualified by others, and welders and welding operators qualified by previous employers may be accepted as permitted by ANSI B31.1. The Contracting Officer shall be notified at least 24 hours in advance of tests and the tests shall be performed at the work site if practicable. The Contracting Officer shall be furnished copies of qualified procedures and lists of names and identification symbols of qualified welders and welding operators. The welder or welding operator shall apply his assigned symbol near each weld he makes as a permanent record.

2.2. STANDARD PRODUCTS. Materials and equipment shall be the standard products of manufacturers regularly engaged in the manufacture of such products. Equipment items shall essentially duplicate equipment that has been in satisfactory use at least 2 years before bid opening. Asbestos or products containing asbestos shall not be used. Manufacturer's descriptive data and installation instructions shall be submitted for approval for compression-type mechanical joints used in joining dissimilar materials and for insulating joints. Valves, flanges and fittings shall be marked in accordance with MSS SP-25.

2.3. VERIFICATION OF DIMENSIONS. The Contractor shall become familiar with all details of the work, verify all dimensions in the field, and shall advise the Contracting Officer of any discrepancy before performing the work.

2.4. OPERATING AND MAINTENANCE INSTRUCTIONS.

2.4.1. Operating instructions outlining the step-by-step procedures required for system startup, operation and shutdown shall be furnished. The instructions shall include the manufacturer's name, model number, service manual, parts list, and a brief description of equipment items and basic operating features. Parts lists shall include recommended spare parts and maintenance supplies with current unit prices and source of supply for each item of operable equipment.

2.4.2. Maintenance instructions listing routine maintenance procedures, possible breakdowns and repairs, and trouble shooting guides shall be furnished. The instructions shall include simplified control diagrams for the appliances installed.

3. SUBMITTALS. Approval is required for submittals with a "GA" designation; submittals having an "FIO" designation are for information only. The following shall be submitted in accordance with Section 01300 SUBMITTAL PROCEDURES:

SD-01 Data\

Names and Identification Symbols of Qualified Welders\; *GA*\

Storage Tanks Description, Supplier Information, & Pad\; *GA*\

Operating and Maintenance Instructions\; *GA*\

SD-08 Statement\

Welding Procedures\; *GA*\

4. PIPE AND FITTINGS:

4.1 STEEL PIPE, JOINTS, AND FITTINGS. Steel pipe shall conform to ANSI B36.10. Malleable iron threaded fittings shall be ANSI B16.3. Steel pipe flanges and flanged fittings shall be ANSI B16.5. Wrought steel butt-welding fittings shall be ANSI B16.9. Socket-welding and threaded forged steel fittings shall be ANSI B16.11.

4.2. STEEL TUBING, JOINTS AND FITTINGS. Steel tubing shall conform to ASTM A 539. Tubing joints shall be made up with gas tubing fittings recommended by the tubing manufacturer.

4.3. SEALANTS FOR STEEL PIPE THREADED JOINTS.

4.3.3.0.1. Joint sealing compound shall be listed in UL Gas and Oil Equipment Directory, Class 20 or less.

4.3.2. Tetrafluoroethylene tape shall conform to MIL-T-27230.

4.4. FLANGE GASKETS. Gaskets shall be non-asbestos compressed material in accordance with ANSI B16.21, 1/16-inch thickness, full face or self-centering flat ring type. The gaskets shall contain aramid fibers bonded with styrene butadiene rubber (SBR) or nitrile butadiene rubber (NBR) suitable for a maximum 600 degree F service. NBR binder shall be used for hydrocarbon service.

4.5. PIPE THREADS. Pipe threads shall conform to ANSI B1.20.1.

4.6. INSULATING JOINT MATERIAL. Insulating joint material shall be provided between flanged or threaded metallic pipe systems where shown to control galvanic or electrical action.

4.6.1. Joints for threaded pipe shall be steel body nut type dielectric unions with insulating gaskets.

4.6.2. Joints for flanged pipe shall consist of full face sandwich-type flange insulating gasket of the dielectric type, insulating sleeves for flange bolts, and insulating washers for flange nuts.

5. VALVES shall be suitable for shutoff or isolation service and shall conform to ANSI B16.33 and shall be of materials and manufacture compatible with system materials used.

6. PIPE HANGERS AND SUPPORTS shall conform to MSS SP-58 and MSS SP-69.

7. PRESSURE REGULATORS: Pressure regulators shall be provided to deliver gas to flare pilot system at pressure required.

8. MATERIALS AND EQUIPMENT: Equipment, appliances, and accessories shall be suitable for use with pilot and ignition gas as specified in SECTION: LANDFILL GAS FLARE SYSTEMS. Unless otherwise indicated, gas piping systems shall conform to ANSI Z223.1.

9. EXCAVATION AND BACKFILLING: Earthwork shall be as specified in SECTION: EXCAVATION, TRENCHING, AND BACKFILLING FOR UTILITIES SYSTEMS.

10. GAS PIPING SYSTEM: Gas piping system shall be from the point of delivery defined as the outlet of the tank regulator to the connections to each gas utilization device.

10.1. PROTECTION OF MATERIALS AND COMPONENTS. Pipe and tube openings shall be closed with caps or plugs during installation. Equipment shall be protected from dirt, water, and chemical or mechanical injury. At the completion of all work, the entire system shall be thoroughly cleaned.

10.2. WORKMANSHIP AND DEFECTS. Pipe, tubing, and fittings shall be clear and free of cutting burrs and defects in structure or threading and shall be thoroughly brushed and chip- and scale-blown. Defects in pipe or tubing or fittings shall not be repaired. When defective pipe, tubing, or fittings are located in a system, the defective material shall be replaced.

11. PROTECTIVE COVERING:

11.1. UNDERGROUND METALLIC PIPE. Buried metallic piping shall be protected from corrosion with protective coatings. When dissimilar metals are joined underground, gastight insulating fittings shall be used.

11.2. ABOVEGROUND METALLIC PIPING SYSTEMS.

11.2.1. Ferrous Surfaces. Shop primed surfaces shall be touched up with ferrous metal primer. Surfaces that have not been shop primed shall be solvent cleaned. Surfaces that contain loose rust, loose mill scale and other foreign substances shall be mechanically cleaned by power wire brushing and primed with ferrous metal primer. Primed surface shall be finished with two coats of exterior oil paint.

12. INSTALLATION of the gas system including all equipment, shall conform to the manufacturer's recommendations, applicable provisions of ANSI Z223.1 and as indicated. Pipe cutting shall be done without damage to the pipe. Unless otherwise authorized, cutting shall be done by an approved type of mechanical cutter. Wheel cutters shall be used where practicable.

12.1. METALLIC PIPING INSTALLATION. Underground piping shall be buried a minimum of 18 inches below grade. Changes in direction of piping shall be made with fittings only; mitering or notching pipe to form elbows and tees or other similar type construction will not be permitted. Branch connection may be made with either tees or forged branch outlet fittings. Branch outlet fittings shall be forged, flared for improvement of flow where attached to the run, and reinforced against external strains.

12.2. METALLIC TUBING INSTALLATION. Metallic tubing shall be installed using gas tubing fittings approved by the tubing manufacturer. Branch connections shall be made with tees. All tubing end preparation shall be made with tools designed for the purpose.

13. PIPE JOINTS shall be designed and installed to effectively sustain the longitudinal pull-out forces caused by contraction of the piping or superimposed loads.

13.1. THREADED METALLIC JOINTS. Threaded joints in metallic pipe shall have tapered threads evenly cut and shall be made with UL approved graphite joint sealing compound for gas service or tetrafluoroethylene tape applied to the male

threads only. After cutting and before threading, pipe shall be reamed and burrs shall be removed. Caulking of threaded joints to stop or prevent leaks shall not be permitted.

13.2. WELDED METALLIC JOINTS. Beveling, alinement, heat treatment, and inspection of welds shall conform to ANSI B31.2. Weld defects shall be removed and repairs made to the weld, or the weld joints shall be entirely removed and rewelded. After filler metal has been removed from its original package, it shall be protected or stored so that its characteristics or welding properties are not affected adversely. Electrodes that have been wetted or have lost any of their coating shall not be used.

13.3. FLARED METALLIC TUBING JOINTS. Flared joints in metallic tubing shall be made with special tools recommended by the tubing manufacturer. Flared joints shall be used only in systems constructed from non-ferrous pipe and tubing, when experience or tests have demonstrated that the joint is suitable for the conditions, and when adequate provisions are made in the design to prevent separation of the joints. Metallic ball sleeve compression-type tubing fittings shall not be used for tubing joints.

13.4. SOLDER OR BRAZED JOINTS. Joints in metallic tubing and fittings shall be made with materials and procedures recommended by the tubing supplier. Joints shall be brazed with material having a melting point above 1000 degrees F. Brazing alloys shall not contain phosphorous.

14. SHUTOFF VALVES: Main gas shutoff valves controlling the gas piping system shall be easily accessible for operation and shall be installed between tank and regulator and shall be protected from physical damage and marked with a metal tag which clearly identifies the piping system controlled.

15. SPECIAL REQUIREMENTS: Drips, grading of the lines, freeze protection and branch outlet locations shall conform to the requirements of ANSI Z233.1.

16. PIPING SUPPORTS: Spacing of gas piping and tubing supports shall conform to the requirements of MSS SP-69.

17. TESTING: Before any section of a gas piping system is put into service, it shall be carefully tested to assure that it is gastight. Prior to testing, the system shall be blown out, cleaned and cleared of all foreign material. Each joint shall be tested by means of an approved gas detector, soap and water, or an equivalent nonflammable solution. Testing shall be completed before any work is covered, enclosed, or concealed. All testing of piping systems shall be done with due regard for the safety of employees and the public during the test. Bulkheads, anchorage and bracing suitably designed to resist test pressures shall be installed if necessary. Oxygen shall not be used as a testing medium.

17.1. PRESSURE TESTS. Before appliances are connected, piping systems shall be filled with air or an inert gas and shall withstand a minimum pressure of 3 pounds gauge for a period of not less than 10 minutes as specified in ANSI Z223.1 without showing any drop in pressure. Oxygen shall not be used. Pressure shall be measured with a mercury manometer, slope gage, or an equivalent device so calibrated as to be read in increments of not greater than 0.1 pound. The source of pressure shall be isolated before the pressure tests are made.

17.2. PRESSURE TESTS FOR LIQUIFIED PETROLEUM GAS. Systems shall withstand the pressure test described above. When appliances are connected to the piping system, fuel gas shall be used for testing and appliances shall withstand a

pressure of not less than 10.0 inches nor more than 14.0 inches water column (8.0 ounces per square inch) for a period of not less than 10 minutes without showing any drop in pressure. Pressure shall be measured with a water manometer or an equivalent device calibrated to be read in increments of not greater than 0.1 inch water column. The source of pressure shall be isolated before the pressure tests are made.

17.3. TEST WITH GAS. Before turning gas under pressure into any piping, all openings from which gas can escape shall be closed. Immediately after turning on the gas, the piping system shall be checked for leakage by using a laboratory-certified gas meter, an appliance orifice, a manometer, or equivalent device. All testing shall conform to the requirements of ANSI Z223.1. If leakage is recorded, the gas supply shall be shut off, the leak shall be repaired, and the tests repeated until all leaks have been stopped.

17.4. PURGING. After testing is completed, and before connecting any appliances, all gas piping shall be fully purged. LPG piping tested using fuel gas with appliances connected does not require purging. Piping shall not be purged into the combustion chamber of an appliance. The open end of piping systems being purged shall not discharge into confined spaces or areas where there are ignition sources unless the safety precautions recommended in ANSI Z223.1 are followed.

17.5. LABOR, MATERIALS AND EQUIPMENT. All labor, materials and equipment necessary for conducting the testing and purging shall be furnished by the Contractor.

18. PROPANE STORAGE TANKS: The Contractor shall supply propane storage tanks and all connecting valves and piping and shall obtain any local permits required for storage of propane fuel on-site. The tanks shall conform to all applicable standards for pressurized propane storage tanks, including ASME and UL. A Manufacturer's Data Report must be supplied for verification by authorized independent inspection agency. The tanks supplied shall be of the capacity called for, and be controlled to operate as described in SECTION: Landfill Gas Flare System. The tanks shall be factory final primed and painted per manufacturer's recommendation prior to shipment. The tanks shall be located a distance from the flare as recommended by the flare manufacturer and, in a location acceptable to the Contracting Officer. If the tanks are located off the flare pad, provide an appropriate pad and shop drawings for approval.

* * * * * *

SECTION 15370
PROCESS PIPING AND APPURTENANCES

INDEX

1. APPLICABLE PUBLICATIONS
2. GENERAL REQUIREMENTS
3. SUBMITTALS
4. NOT USED
5. MATERIALS AND EQUIPMENT
6. STEEL PIPE AND FITTINGS
7. HIGH DENSITY POLYETHYLENE PIPE AND FITTINGS
8. NOT USED
9. NOT USED
10 MATERIAL SCHEDULE
11. INSTALLATION OF PIPE - GENERAL
12. INSTALLATION OF PIPE - POLYETHYLENE
13. HANGERS AND SUPPORTS
14. TEMPORARY PLUGS
15. TESTING
16. FIELD QUALITY CONTROL; POLYETHYLENE
17. PIPE SLEEVE
18. CONDENSATE TANKS

1. APPLICABLE PUBLICATIONS.

1.1. MANUFACTURER'S STANDARDIZATION SOCIETY.

1.1.1.	MSS SP-58	Pipe Hangers and Supports: Materials, Design and Manufacturers
1.1.2.	MSS SP-69	Pipe Hangers and Supports: Selection and Application

1.2. AMERICAN SOCIETY FOR TESTING AND MATERIALS.

1.2.1.	ASTM A47	Standard specification for Malleable Iron castings.
1.2.2	ASTM A120-82:	Standard Specification for Pipe, Steel, Black and Hot-Dipped, Zinc Coated (Galvanized) Welded and Seamless, for Ordinary Uses.
1.2.3	ASTM A181-81:	Standard Specification for Forgings, Carbon steel, for general Purpose Piping.
1.2.4	ASTM A197-79:	Standard Specification for cupola Malleable Iron
1.2.5	ASTM A307-82a:	Standard Specification for Carbon Steel Externally Threaded Standard Fasteners.
1.2.6	ASTM A 760	Corrugated Steel Pipe.
1.2.7	ASTM D638-84	Test Method for Tensile Properties of Plastics.
1.2.8	ASTM D790-84	Test Method for Flexural Properties of Unreinforced and Reinforced Plastics and Electrical Insulating.
I.2.9	ASTM D1238-82	Test Method for Flow Rates of Thermoplastics by Extrusion Plastometer.
1.2.10	ASTM D1248-81A	Specification for Polyethylene

		Plastics Molding and Extrusion Materials.
1.2.11	ASTM D1505-68	Test Method for Density of Plastics by the Density-Gradient Technique.
1.2.12	ASTM D1693-70	Test Method for Environmental Stress cracking of Ethylene Plastics.
1.2.13	ASTM D2657-87	Standard Practice for Heat-Joining Polyolefin Pipe and Fittings.
1.2.14	ASTM D2837-88	Standard Test Method for Obtaining Hydrostatic Design Basis for Thermoplastic Pipe Materials.
1.2.15	ASTM D3350-83	Standard Specification for polyethylene Pipe and Fittings Material.

1.3. AMERICAN NATIONAL STANDARDS INSTITUTE.

1.3.1.	ANSI B16.1-1975:	Cast Iron Pipe Flanges and Flanged Fittings, Class 25, 125, 250 and 800.
1.3.2.	ANSI S16.3-1977:	Malleable Iron Threaded Fittings, class 150 and 300.
1.3.3.	ANSI B16.9-1978:	Factory-Made Wrought steel Buttwelding Fittings.

2. GENERAL REQUIREMENTS.

2.1. DESCRIPTION.

2.1.1. Furnish, install, and test all miscellaneous pipe, fittings, and appurtenances as specified and indicated.

2.2. QUALITY ASSURANCE.

2.2.1. Provide manufacturer's certification that materials meet or exceed minimum requirements as specified.

3. SUBMITTALS. Approval is required for submittals with a "GA" designation; submittals having an "FIO" designation are for information only. The following shall be submitted in accordance with Section \-01300-\ SUBMITTAL PROCEDURES:

SD-01 Data\

detailed pipe system layout\; *GA*\.
Include pipe class or schedule, size, lining, fittings, connections, adapters, couplings, and other items required.

Equipment\; *GA*\.
Submit manufacture's literature and installation instructions for moisture separators, all gages, relief valves, flowmeters, filters, and condensate pump.

Condensate tank\; *GA*\.

SD-04 Drawings\

As-built drawings for all piping systems\; *GA*\
Include underground piping and process piping. Drawings shall include all valves, fittings, and piping material of construction.

Condensate tanks\; *GA*\.

SD-13 Certificates\.

Valves, Fittings, hangers, and materials\; *GA*\
Certificates shall include all valves, fittings, hangers,supports, and piping material of construction.

4. TYPE OF PIPE FOR LANDFILL GAS COLLECTION/FLARE SYSTEM

- Pipe upstream of blowers (including condensate piping) shall be High Density Polyethylene (HDPE) except as follows: aboveground pipe upstream of blowers may be steel at Contractor's option.

- Pipe downstream of blowers shall be steel.

5. MATERIALS, EQUIPMENT, & INSTALLATION.

5.1. MATERIAL - GENERAL.

5.1.1. Flanged Joints. Bolt and nuts, Grade B, ASTM A307-78; bolt number and size frame as flange standard; studs - same quality as machine bolts; 1/16-inch thick teflon with inert filler; rust-resistant coatings.

5.1.2. Temporary Plugs. Plugs or caps; water tight plugs for exterior buried piping.

5.1.3. Butterfly Valves: The valves shall be for Class 1, Division 2, Group D (T) applications (methane aqnd carbon dioxide are the main constituents). The valve body shall be cast iron, polypropylene, or PVC material with polypropylene discs and viton seals. The valve shall fit between 150 # flanges and be rated for 150 psi and full vacuum service.

5.1.4. Ball Valve: NPT threaded ends, PVC, full port, self-lubricating, TFE seats, Viton O-ring seals.

5.2. *EQUIPMENT*\

5.2.1 Moisture Separators. Moisture separators shall meet capacity requirements shown on the drawings and be similar or equal to Rotron Model MS600bs except that: float ball shall be stainless steel, there shall be upper and lower level switches, the inside shall be coated with a coating resistant to hydrogen sulfide, and drain solenoid valves shall be stainless steel. Exterior surfaces shall be painted in accordance with manufacturer's standard painting system.

5.2.2 Gages. Gages shall be similar or equal those manufactured by Rotron and shall have an appropriate range for the pressure and/or vacuum encountered.

5.2.3 Relief Valves. Relief valves shall be similar or equal those manufactured by Rotron and shall have an appropriate range for the pressure and/or vacuum encountered.

5.2.4 Flowmeters. Flowmeters shall be similar or equal those manufactured by Rotron and shall have a range and pressure drop as indicated.

5.2.5 Filters. Filters shall be similar or equal those manufactured by Rotron and shall have capacity as indicated.

5.2.6 Condensate Pump. Condensate pump shall be the centrifugal type and have capacity indicated. Pump shall be similar or equal to Harrington Model 3-MD-HC for highly corrosive applications. It's wetted construction shall be resistant to hydrogen sulfide.

5.3 INSTALLATION

5.3.1 Moisture Separators. Anchoring of the separators to the concrete foundation shall consist of one expansion anchor per support stand leg. Expansion anchor bolts shall be wedge-type, 1/2-inch diameter, 6 inches long, with a minimum of 4 inches penetration in concrete, or as specified by equipment manufacture.

6. STEEL PIPE AND FITTINGS.

6.1. ASTM A120, schedule 40, with internal coating resistant to hydrogen sulfide (shall be same coating type and thickness that blowers receive and shall be coordinated by the Contractor). If schedule 40 type 304 stainless steel is used instead, the coating may be omitted.

6.2. NOT USED.

6.3. NOT USED.

6.4. JOINTS.

6.4.1. Screwed joint for pipe 2-1/2 inch and smaller; larger sizes butt welded or flanged.

6.5. FITTINGS. The inside of the fittings shall be coated as described above for the pipe. If type 304 stainless steel fittings are used, the coating may be omitted.

6.5.1. Screwed type of 150-lb. malleable iron, ASTM A197 or A47, conforming to ANSI B16.3. Unions of 150 lb. malleable iron with brass to iron seat.

6.6. FLANGES. Forged steel, ASTM A181, screwed type, drilled and faced 150-lb. 1/16-inch raised face ANSI B16.5 standard.

6.6.1. GASKETS. For flanged joints, 1/16 inch thick, teflon, inert filler.

7. HIGH DENSITY POLYETHYLENE PIPE AND FITTINGS

7.1. MATERIAL. Physical Properties of Pipe Compound shall be in accordance with Table 1.

Table 1
Physical Properties

Density	ASTM D1505, not less then 0.941 - 0.955 gms/cu cm.
Melt Flow	ASTM D1238 - Condition E not greater than 0.4 gms/10 min.
Flexural Modulus	ASTM D790, 110,000 to less than 160 psi.
Tensile Strength	ASTM D638, 3,000 to less than 3,500 psi at Yield
Environmental Crack Resistance(ESCR)	ASTM D1693 - Condition C, shall be in excess of Stress 1,000 hrs (5,000 hrs) with zero failures.
Hydrostatic Design Basis	ASTM D2837, 1,600 psi at 23°C.

7.1.1 Pipe shall be high performance, high molecular weight, high density polyethylene pipe. Pipe shall conform to ASTM D1238 (Type III, Class C, Category 5, P34) and AsTM D3350, minimum cell classification value 354434C. All pipe shipped to the project shall be marked in intervals of 5 ft or less with :

a. Manufacturer's name or trademark.
b. Nominal pipe size.
c. HDPE cell classification, ASTM D3350
d. Legend: Manufacturer's strength data.
e. ASTM D1248.
f. Extrusion date, period of manufacture or lot number.

7.1.2. Pipe dimensions shall be in accordance with the following:

Table 2
HDPE Pipe Application and Dimension

Application	Nominal Size	SDR Rating
LANDFILL GAS COLLECTION/FLARE SYSTEM		
Condensate Return Pipe	1-inch	SDR 11
Feeder/Lateral Pipe	6-inch	SDR 21
• Header Pipe	8-inch	SDR 21
• Header Pipe	10-inch	SDR 21
• Header Pipe	12-inch	SDR 21

7.2 FITTINGS:

7.2.1 Molded from polyethylene compound having cell classification equal to or exceeding compound used in pipe to ensure compatibility of polyethylene resins.

7.2.2 Be of same manufacture as pipe being provided.

7.2.3 Flange Joints: Flanges and bolt patterns as specified by manufacturer. Flange shall be used to connect landfill gas collection vent tie-in hose to main header.

7.2.4 Markings:

7.2.4.1 Manufacturer's name or trademark.

7.2.4.2 Nominal size.

7.2.4.3 Material designation "HDPE."

7.2.4.4 ASTM D1248.

7.2.5 Branch Saddle shall be used to tie-in to main header pipe.

8. NOT USED.

9. NOT USED.

10. NOT USED.

11. INSTALLATION OF PIPE - GENERAL.

11.1. Ensure lines parallel and/or perpendicular to blower/flare slab wherever possible. Install piping to accurate lines and grades, and support by acceptable hangers spaced as necessary, but not more than 8 ft. apart. Provide for expansion where necessary.

11.2. Support piping laid in trenches in trench on bed of selected backfill material which maintains desired line and grade.

11.3. Before assembly, remove all dirt and chips from inside pipe and fittings and from threads.

11.4. After cutting to final lengths, ream ends of steel pipe to remove burrs.

11.5. Clean-cut threads of all long tapered screwed joints. Make up screwed joints with acceptable pipe-joint compound applied to male threads only.

11.6. Disjoint entirely joints which are required to be backed off. Wipe clean threads of both pipe and fittings. Apply new joint compound. Reassemble connection.

11.7. No close nipples allowed.

11.8. Make flanged joints with bolts; both studs with nut on each end; or studs with nuts where one flange is tapped. Number and size of bolts conforming to same AN Standard as flanges. Grade s bolts and nuts conforming to ASTM A30782. Bolt studs and studs of same quality as machine bolts. Ring gaskets teflon with inert filler, 1/16-inch thick gaskets. Before flanged pieces are assembled, remove rust-resistant coatings from machined surfaces, clean gaskets and smooth all burrs and other defects. Make up flanged joints tight, care being taken to prevent undue strain upon valves or other pieces of equipment.

12. INSTALLATION OF PIPE - POLYETHYLENE.

12.1. Trench, backfill and compaction shall be in accordance with SECTION: EXCAVATION, TRENCHING AND BACKFILLING FOR UTILITIES SYSTEMS.

12.2. Welded Joints:

12.2.1 Weld in accordance with manufacturer's recommendation for butt fusion methods and ASTM D2657.

12.2.2 Butt fusion equipment used in joining procedures shall be capable of meeting conditions recommended by pipe manufacturer, including, but not limited to, temperature requirements, alignment and fusion pressures.

12.3. Mechanical Jointing:

12.3.1 Butt fuse fabricated flange adapters to pipe.

13. HANGERS AND SUPPORTS.

13.1. Hangers and supports shall be in compliance with MSS SP-58 and MSS SP-69.

13.2 All piping shall be rigidly supported by approved inserts, or supports, with adequate provisions for expansion and contraction. No piping shall be supported from other piping, unless specifically allowed by the Contracting Officer.

13.3 Each section of pipeline shall be laid out and all connections (cemented, welded, screwed) made while the pipe is held in temporary supports. After completion of connections the pipe may be clamped in position. When piping is correctly installed its permanent supports, a temporary clamp or pipe may be loosened or removed without displacement of the pipeline.

14. TEMPORARY PLUGS.

14.1. Close open ends of pipe with temporary plugs or caps when pipe installation is not in progress. Use watertight plugs for exterior, buried piping and if water or debris is in trench when work is resumed, do not remove until adequate provision has been made to prevent any water or debris entering pipe if it necessitates dewatering trench.

15. TESTING.

15.1. After installation, test all process pipelines for tightness by pressurizing with air and checking with an acceptable leak detection fluid.

15.2. Do not cover joints in underground piping with backfill material until piping has successfully passed pressure test. Test no more than 500 feet of piping at a time.

15.3. Test pressure at least 50 psi or 1-1/2 times normal operating pressure, whichever is greater, and maintain for at least 2 hours.

15.4. Should leaks be found, repair faulty joints even to extent of disassembling and remaking joint, remove all defective pipe fittings and replace in manner satisfactory to Contracting Officer.

15.5. Disconnect all fixtures and devices which may be damaged by the test pressure and plug or cap the lines for testing.

16. FIELD QUALITY CONTROL; POLYETHYLENE PIPE

16.1. Pipe may be rejected for failure to conform to specification, or fractures or cracks passing through pipe wall, except single crack not exceeding 2-in. in length at either end of pipe which could be cut off and discarded. Pipes within one shipment will be rejected if defects exist in more than 5% of the shipment or delivery. Cracks sufficient to impair strength, durability or serviceability of pipe. Defects indicating improper proportioning, mixing and molding. Damaged ends, where such damage would prevent making satisfactory joint.

16.2. Acceptance of fittings, stubs, or other specially fabricated pipe sections shall be based on visual inspection at the job site and documentation that they conform to these specifications.

17. PIPE SLEEVE.

17.1. Roads. The pipes under roads shall be encased in a rigid sleeve of rigid CMP for the length installed under the site access road. The sleeve shall extend a minimum of 5 feet beyond the toe of the slope on each side of the embankment.

17.2 Clearance. A minimum clearance of at least 2 inches between the inner diameter of the sleeve and the maximum outside diameter of the sleeved pipe, including the joints, shall be provided.

17.3 Sand Bedding. Sand bedding shall be provided for the carrier pipe through the sleeve.

18. *CONDENSATE TANKS*\: Underground tanks shall conform with NFPA 30 unless otherwise indicated. The tanks shall be constructed of glass fiber reinforced plastic. The tanks shall be fabricated for the location and the service intended and shall be provided with openings and appurtenances as indicated. Trench and backfill in accordance with SECTION: EXCAVATION, TRENCHING AND BACKFILLING FOR UTILITIES SYSTEMS.

18.1 Fiberglass Reinforced Plastic Tanks. Glass fiber reinforced plastic tanks shall UL labeled and have both inner and outer tank walls constructed in accordance with ASTM d 4021 and UL 1316. Fiberglass reinforce plastic tanks shall not be coated. Tanks shall be of double wall construction with an interstitial space between the walls in which a leak monitoring system shall be installed. The tanks shall be handled with extreme care to prevent damage during installation and transportation to the site. Any damaged tank shall be repaired under direct supervision of the tank manufacturer. The tanks shall be installed in accordance with the tank manufacturer's written instructions. The tanks shall be installed similarly to steel tanks, except that a minimum 12-inch thick pea gravel cushion pad shall be provided between the bottom of the tank and the top of the concrete hold-down pad. Hold-down straps shall be fiberglass reinforced plastic as furnished by the tank manufacturer. Hold-down straps shall be anchored to the concrete pad by 6 X 19 plow steel wire rope and turnbuckles or clamps as recommended by the tank manufacturer. The tanks shall have a 30 year warranty against failure due to exterior corrosion, interior corrosion, or structural failure when installed as specified by the tank manufacturer.

18.2 Leak Detection. A leak detection device shall be provided for the underground tank. The gauge shall be a remote reading, leak detecting device of standard manufacture, complete with all accessories designed for leak detection in the interstitial space between the two walls of the tank.

18.3 Tank Calibration. The tank manufacturer shall provide a calibration chart for the tank showing the liquid contents in gallons per inch of tank depth. Six reproductions of the calibration chart enclosed in plastic envelopes shall be provided for each tank. The Contractor shall provide one gauge stick for the size of tank provided. The gauge stick shall be wood, graduated in inches and eighths of an inch and shall be properly treated after graduation to prevent swelling or damage from the condensate.

18.4 Level Switches. Provide two level switches to serve purpose on control logic diagram drawings.

* * * * * *

SECTION 16415

ELECTRICAL WORK

Attachments: Std. Dwg. 40-06-04, Sheets 46 and 56

INDEX

PART 1 GENERAL
- 1.1 SUMMARY (Not Applicable)
- 1.2 REFERENCES
- 1.3 GENERAL
- 1.4 SUBMITTALS
- 1.5 WORKMANSHIP
- 1.6 **NOT USED**
- 1.7 **NOT USED**
- 1.8 APPLICATION OF THIS SECTION

PART 2 PRODUCTS
- 2.1 MATERIALS AND EQUIPMENT

PART 3 EXECUTION
- 3.1 GROUNDING
- 3.2 WIRING METHODS
- 3.3 BOXES AND SUPPORTS
- 3.4 **NOT USED**
- 3.5 **RECEPTACLES**
- 3.6 **NOT USED**
- 3.7 SERVICE AND METERING EQUIPMENT
- 3.8 PANELBOARDS
- 3.9 **NOT USED**
- 3.10 **NOT USED**
- 3.11 **FUSES**
- 3.12 UNDERGROUND-SERVICE CONDUITS
- 3.13 AERIAL SERVICE
- 3.14 MOTORS
- 3.15 MOTOR CONTROL
- 3.16 MOTOR-DISCONNECT MEANS
- 3.17 TRANSFORMERS
- 3.18 LAMPS AND LIGHTING FIXTURES
- 3.19 **NOT USED**
- 3.20 **NOT USED**
- 3.21 AUTOMATIC TELEPHONE DIALER
- 3.22 HEAT TAPE
- 3.23 EQUIPMENT CONNECTIONS
- 3.24 **NOT USED**
- 3.25 PAINTING AND FINISHING
- 3.26 REPAIR OF EXISTING WORK
- 3.27 TESTS
- 3.28 SPARE PARTS

SECTION 16415

ELECTRICAL WORK

Attachments: Std. Dwg. 40-06-04, Sheets 46 and 56

PART 1 GENERAL

1.1 SUMMARY (Not Applicable)

1.2 REFERENCES

The publications listed below form a part of this specification to the extent referenced. The publications are referred to in the text by basic designation only.

1.2.1 AMERICAN NATIONAL STANDARDS INSTITUTE (ANSI)

ANSI C2	(1993) National Electrical Safety Code
\-ANSI C12.11-\	(1987) Instrument Transformers for Revenue Metering, 10 kV BIL through 350 kV BIL (0.6 kV NSV through 69 kV NSV)
\-ANSI C57.12.50-\	(1981; R 1989) Requirements for Ventilated Dry-Type Distribution Transformers, 1 to 500 kVA, Single-Phase, and 15 to 500 kVA, Three-Phase, with High-Voltage 601 to 34 500 Volts, Low-Voltage 120 to 600 Volts
\-ANSI C82.4-\	(1985; C82.4a-1988) Ballasts for High-Intensity-Discharge and Low-Pressure Sodium Lamps (Multiple Supply Type)
\-ANSI C57.12.26-\	(1987) Pad-Mounted Compartmental-Type, Self-Cooled, Three-Phase Distribution Transformers for Use with Separable Insulated High-Voltage Connectors, High-Voltage, 34500 Grd Y/19920 Volts and Below; 2500 kVA and Smaller
\-ANSI C57.12.27-\	(1982) Conformance Requirements for Liquid-Filled Distribution Transformers Used in Pad-Mounted Installations, Including Unit Substations

1.2.2 CODE OF FEDERAL REGULATIONS (CFR)

\-47 CFR 68-\	Connection of Terminal Equipment to the Telephone Network

1.2.3 INSTITUTE OF ELECTRICAL AND ELECTRONICS ENGINEERS (IEEE)

\-IEEE C57.12.00-\	(1993) IEEE Standard General Requirements for Liquid-Immersed Distribution, Power, and Regulating Transformers
\-IEEE C57.12.01-\	(1989) Dry-Type Distribution and Power Transformers Including Those With Solid Cast and/or Resin - Encapsulated Windings
\-IEEE C57.12.80-\	(1978; R 1992) Terminology for Power and Distribution Transformers
\-IEEE C57.12.90-\	(1993) Test Code for Liquid-Immersed Distribution, Power, and Regulating Transformers and Guide for Short-Circuit Testing of Distribution and Power Transformers
\-IEEE C57.13-\	(1993) Instrument Transformers
\-IEEE C57.98-\	(1993) Guide for Transformer Impulse Tests
\-IEEE C57.100-\	(1986; R 1992) Test Procedure for Thermal Evaluation of Oil-Immersed Distribution Transformers
\-IEEE C57.105-\	(1978; R 1992) Transformer Connections in Three-Phase Distribution Systems
\-IEEE Std 81-\	(1983) Guide for Measuring Earth Resistivity, Ground Impedance, and Earth Surface Potentials of a Ground System (Part 1)
\-IEEE Std 386-\	(1995) Separable Insulated Connector Systems for Power Distribution Systems Above 600 V

1.2.5 NATIONAL ELECTRICAL MANUFACTURERS ASSOCIATION (NEMA)

\-NEMA 250-\	(1991) Enclosures for Electrical Equipment (1000 Volts Maximum)
\-NEMA AB 1-\	(1993) Molded Case Circuit Breakers and Molded Case Switches
\-NEMA FU 1-\	(1986) Low Voltage Cartridge Fuses
\-NEMA ICS 1-\	(1993) Industrial Controls and Systems

\-NEMA ICS 2-\	(1993) Industrial Control Devices, Controllers and Assemblies
\-NEMA ICS 3-\	(1993) Industrial Systems
\-NEMA ICS 6-\	(1993) Enclosures for Industrial Control and Systems
\-NEMA KS 1-\	(1990) Enclosed Switches
\-NEMA LA 1-\	(1992) Surge Arresters
\-NEMA LE 4-\	(1987) Recessed Luminaires, Ceiling Compatibility
\-NEMA MG 1-\	(1987; Rev 1) Motors and Generators
\-NEMA MG 10-\	(1994) Energy Management Guide for Selection and Use of Polyphase Motors
\-NEMA OS 1-\	(1989) Sheet Steel Outlet Boxes, Device Boxes, Covers and Box Supports
\-NEMA PB 1-\	(1990) Panelboards
\-NEMA RN 1-\	(1989) Polyvinyl-Chloride (PVC) Externally Coated Galvanized Rigid Steel Conduit and Intermediate Metal Conduit
\-NEMA ST 20-\	(1986) Dry-Type Transformers for General Applications
\-NEMA WD 1-\	(1983; R 1989) General Requirements for Wiring Devices
\-NEMA WD 6-\	(1988) Wiring Devices - Dimensional Requirements

1.2.6 NATIONAL FIRE PROTECTION ASSN (NFPA)

\-NFPA 70-\	(1993) National Electrical Code
\-NFPA 101-\	(1994) Safety to Life from Fire in Buildings and Structures

1.2.7 UNDERWRITERS LABORATORIES, INC (UL)

\-UL 1-\	(1993; Rev thru Jan 1995) Flexible Metal Conduit
\-UL 6-\	(1993) Rigid Metal Conduit

\-UL 20-\	(1995) General-Use Snap Switches
\-UL 50-\	(1992; Rev thru Nov 1994) Enclosures for Electrical Equipment
\-UL 67-\	(1993; Rev thru Dec 1993) Panelboards
\-UL 83-\	(1991; Rev thru Oct 1994) Thermoplastic-Insulated Wires and Cables
\-UL 94-\	\&(1991; Rev thru Apr 1995)&\ Tests for Flammability of Plastic Materials for Parts in Devices and Appliances
\-UL 98-\	(1994; R Feb 1995) Enclosed and Dead-Front Switches
\-UL 360-\	(1986; Rev thru Dec 1994) Liquid-Tight Flexible Steel Conduit
\-UL 467-\	(1993) Grounding and Bonding Equipment
\-UL 486A-\	(1991; Rev Oct 1991) Wire Connectors and Soldering Lugs for Use with Copper Conductors
\-UL 486C-\	(1991; Rev thru Sep 1992) Splicing Wire Connectors
\-UL 489-\	(1991; Rev thru Jun 1995) Molded-Case Circuit Breakers and Circuit-Breaker Enclosures
\-UL 498-\	(1991; Rev thru Oct 1994) Attachment Plugs and Receptacles
\-UL 506-\	(Dec 22, 1989; 10th Ed) Specialty Transformers
\-UL 508-\	(1993) Industrial Control Equipment
\-UL 510-\	(1994) Insulating Tape
\-UL 512-\	(Feb 16, 1987; 9th Ed) Fuseholders
\-UL 514A-\	(1991; Rev Apr 1995) Metallic Outlet Boxes
\-UL 514B-\	(1992; Rev thru Apr 1995) Fittings for Conduit and Outlet Boxes
\-UL 674-\	(1994; Rev Jul 1995) Electric Motors and Generators for Use in Hazardous (Classified) Locations

\-UL 698-\	(1995) Industrial Control Equipment for Use in Hazardous (Classified) Locations
\-UL 869A-\	(Mar 23, 1987; 1st Ed; Rev thru Mar 1, 1989) Service Equipment
\-UL 877-\	(1993) Circuit Breakers and Circuit-Breaker Enclosures for Use in Hazardous (Classified) Locations
\-UL 886-\	(1994; Rev thru Jul 1995) Outlet Boxes and Fittings for Use in Hazardous (Classified) Locations
\-UL 894-\	(Oct 19, 1989; 6th Ed) Safety Switches For Use in Hazardous (Classified) Locations
\-UL 943-\	(1993; Rev thru Jan 1995) Ground-Fault Circuit Interrupters
\-UL 1004-\	(1994) Electric Motors
\-UL 1010-\	(1995) Receptacle-Plug Combinations for Use in Hazardous (Classified) Locations
\-UL 1029-\	(1994; Rev Oct 1994) High-Intensity-Discharge Lamp Ballasts
\-UL 1242-\	(Oct 10, 1983; 1st Ed Rev Nov 23, 1989) Intermediate Metal Conduit
\-UL 1561-\	(1994; Rev Jul 1995) Dry-Type General Purpose and Power Transformers
\-UL 1572-\	(1991; Rev thru Mar 1995) High Intensity Discharge Lighting Fixtures
\-UL 1660-\	(1994) Liquid-Tight Flexible Nonmetallic Conduit

1.3 GENERAL

1.3.1 Rules

The installation shall conform to the requirements of ANSI C2, \-NFPA 70-\ and \-NFPA 101-\, unless more stringent requirements are indicated herein or shown. Damp locations, in addition to those defined in the NEC, shall include all cold-storage areas and the interior exposed surfaces of all perimeter single wythe masonry or concrete walls above or below grade. Wet locations, in addition to those defined in the NEC, shall include shower rooms and commercial-type laundry facilities.

1.3.2 Coordination

The drawings indicate the extent and the general location and arrangement of equipment, conduit, and wiring. The Contractor will become familiar with all details of the work and verify all dimensions in the field so that the outlets and equipment shall be properly located and readily accessible. Lighting fixtures, outlets, and other equipment and materials sh all be located to avoid interference with mechanical or structural features; otherwise, lighting fixtures shall be symmetrically located according to the room arrangement when uniform illumination is required, or asymmetrically located to suit conditions fixed by design and shown. Raceways, junction and outlet boxes, and lighting fixtures shall not be supported from sheet metal roof decks. If any conflicts occur necessitating departures from the drawings, details of departures and reasons therefore shall be submitted and approved prior to implementing any change. The Electrical Contractor shall coordinate the electrical work with HVAC and electrical drawings and provide all power related wiring even if they are not shown on electrical drawings.

1.3.3 Hazardous Locations

Wiring and equipment in designated locations shall conform to the \-NFPA 70-\ (NEC) for Class I, Division 1and 2 hazardous locations. Equipment shall be suitable for Group D T1 and operating temperature of 842 degrees F.

1.3.4 Standard Products

Material and equipment shall be a standard product of a manufacturer regularly engaged in the manufacture of the product and shall essentially duplicate items that have been in satisfactory use for at least 2 years prior to bid opening.

1.3.5 Identification Nameplates

Major items of electrical equipment and major components shall be permanently marked with an identification name to identify the equipment by type or function and specific unit number as indicated. Designation of motors shall coincide with their designation in the panel. Unless otherwise specified, all identification nameplates shall be made of laminated plastic with black outer layers and a white core. Edges shall be chamfered. Plates shall be fastened with black-finished round-head drive screws, except motors, or approved nonadhesive metal fasteners. When the nameplate is to be installed on an irregular-shaped object, the Contractor shall devise an approved support suitable for the application and ensure the proper installation of the supports and nameplates. In all instances, the nameplate shall be installed in a conspicuous location. At the option of the Contractor, the equipment manufacturer's standard embossed nameplate material with black paint-filled letters may be furnished in lieu of laminated plastic. The following equipment, as a minimum, shall be provided with identification nameplates:

Minimum 1/4-Inch High Letters	Minimum 1/8-Inch High Letters
Panelboards	Control Power Transformers
Starters	Instrument Transformers
Safety Switches	Control Devices (Relays, Contactors, Etc.)
Motor Controllers	Heat Tape Thermostat
Transformers	
Equipment Enclosures	
Motors	
Automatic Telephone Dialer	

1.4 SUBMITTALS

Data shall be submitted in accordance with the overall requirements detailed in Section \=01300=\ SUBMITTAL PROCEDURES and the specific requirements of this section. Contracting Officer approval is required for submittals with a "GA" designation; submittals having an "FIO" designation are for information only. Documents shall consist of a complete list of equipment and materials, manufacturer's descriptive and technical literature, brochures, catalog cuts, performance specifications, diagrams, and other material as stated in subsequent subparagraphs. The Contractor shall submit additional material if the listed items are not adequate to identify intent or conformance to technical requirements. Any delays associated with resubmittals of incomplete or ambiguous initial submittals will be the Contractor's responsibility. As a minimum the following must be submitted in accordance with the specific subparagraphs noted:

SD-01 Data\

Equipment and Devices for Other Than General Purpose Areas\; *GA*\ (Para 1.3.3, 2.1.15, 3.5.2)

MOTOR CONTROL\; *GA*\ (Para. 2.1.19, 3.15, 3.23.1)

AUTOMATIC TELEPHONE DIALER\; *GA*\ (Para. 3.21)

TRANSFORMERS\; *GA*\ (Para. 2.1.28, 3.17)

Heat Tape\; *GA*\ (Para. 2.1.32, 3.22)

Standard Lighting Fixtures\; *GA*\ (Para. 2.1.15, 3.18.2)

Supplementary documents demonstrating the accuracy and completeness of the list of material and components, that items proposed comply fully with contract requirements, and are otherwise suitable for the application indicated. Documents shall consist of all data or drawings published by the manufacturer of individual items listed including manufacturer's descriptive and technical literature, performance data, catalog cuts, and installation instructions.

SD-04 Drawings\

Supplementary Contractor's Drawings\; *GA*\

Detail drawings consisting of manufacturer's descriptive and technical data, catalog cuts, special installation instructions, applicable schematic diagrams, and equipment layout and anchorage and conduit runs, anchorage, and support. Two sets of as-built drawings, within 30 days following the project completion or turnover.

SD-07 Schedules\

List of Equipment and Materials\; *FIO*\

A complete itemized listing of equipment and material proposed for incorporation into the work. Each itemization shall include an item number, the quantity of items proposed, and the name of the manufacturer of each item.

SD-13 Certificates\

Certificates of Compliance\; *GA*\

Proof Of Compliance

Where materials or equipment are specified to conform to the standards or publications, and requirements of ANSI, ASTM, AWWA, IEEE, NEMA, NFPA, or UL, the Contractor shall submit proof that the items furnished under this section of the specifications conform to such requirements.

a. Underwriters Laboratories, Inc. (UL) Publications

The label or listing of the Underwriters Laboratories, Inc., will be accepted as evidence that the materials or equipment conform to the applicable standards of that agency. In lieu of this label or listing, the Contractor shall submit a statement from a nationally recognized, adequately equipped testing agency indicating that the items have been tested in accordance with required procedures and that the materials and equipment comply with all contract requirements. However, materials and equipment installed in hazardous locations must bear the UL label unless the data submitted from other testing agency is specifically approved in writing by the Contracting Officer.

b. Non-Underwriters Laboratories, Inc. (UL) Publications

For equipment and materials specified to conform to Federal Specifications, or any of the above commercial standards, a manufacturer's certification or published catalog specification data statement that the items comply with applicable specifications or standards publications will be acceptable evidence of such compliance.

SD-19 Operation and Maintenance Manuals\

Operation and Maintenance Manuals\; *GA*\

Six copies of instruction manuals, within 7 calendar days following the completion of factory tests.

Instruction manuals shall be furnished following the completion of factory tests and shall include assembly, installation, operation and maintenance instructions, spare parts data which provides supplier name, current cost, catalog order number, and a recommended list of spare-parts to be stocked and all documents previously submitted and approved. Manuals shall also include data outlining step-by-step procedures for system startup and operation, and a troubleshooting guide which lists possible operational problems and corrective action to be taken. A brief description of all equipment and their basic operating features shall also be included. Documents shall be bound in a suitable binder adequately marked or identified on the spine and front cover. A table of contents page shall be included and marked with pertinent contract information and contents of the manual. Tabs shall be provided to separate different types of documents, such as catalog ordering information, drawings, instructions, and spare parts data. Index sheets shall be provided for each section of the manual when warranted by the quantity of documents included under separate tabs or dividers. The following equipment shall be covered: automatic telephone dialer, circuit breakers, lamps, heat tape and heat tape thermostat.

1.5 WORKMANSHIP

Materials and equipment shall be installed in accordance with recommendations of the manufacturer to conform with the contract documents. The installation shall be accomplished by workmen skilled in this type of work.

1.6 NOT USED
1.7 NOT USED

1.8 APPLICATION OF THIS SECTION

All electrical equipment and materials must conform to the product requirements of this section (ELECTRICAL WORK), and must be installed in the manner prescribed in this section to the extent not covered under other electrical sections of these specifications. The provisions of ELECTRICAL WORK shall also apply to electrical supporting items required by equipment furnished under nonelectrical sections and to electrical subsystems and components of equipment specified as package assemblies in nonelectrical sections, unless specifically excluded or modified in those sections. For additional requirements pertaining to connection of various types of equipment, see paragraph EQUIPMENT CONNECTIONS later in this section.

PART 2 PRODUCTS

2.1 MATERIALS AND EQUIPMENT

Materials and equipment shall conform to the respective publications and other requirements specified below. Other materials and equipment not listed below shall be as specified elsewhere herein and as shown on the drawings

2.1.1 NOT USED

2.1.2 Cables and Wires

Conductors in cables shall be annealed copper. Intermixing of copper and aluminum conductors in these sizes is not permitted. Design is based on copper conductors. Cables shall be single-conductor type, unless otherwise indicated. Cables and wires shall conform to \-UL 83-\ for the thermoplastic-insulated type.

2.1.2.1 NOT USED
2.1.2.2 NOT USED
2.1.2.3 NOT USED

2.1.2.4 Grounding Cables

Grounding cables shall be bare or shall have green low-voltage insulation.

2.1.3 NOT USED
2.1.4 NOT USED
2.1.5 NOT USED
2.1.6 NOT USED

2.1.7 Circuit Breakers

Circuit breakers shall have voltage, current and interrupting ratings of 10,000 amps minimum.

2.1.7.1 Molded-Case

\-NEMA AB 1-\, and \-UL 489-\ for circuit breakers, and \-UL 877-\ for circuit breakers and circuit breaker enclosures in hazardous (classified) locations.

a. Molded-Case Circuit Breakers: Single-pole breakers shall be full module size; two poles shall not be installed in a single module. Multipole breakers shall be of the common-trip type having a single operating handle, but for sizes of 100 amperes or less may consist of single-pole breakers permanently factory assembled into a multipole unit having an internal, mechanical, nontamperable common-trip mechanism and external handle ties.

2.1.7.2 NOT USED

2.1.7.3 Ground Fault Circuit Interrupters

\-UL 943-\. Breakers equipped with ground fault interrupters shall be suitable for switching have ground fault class, interrupting capacity, and voltage and current ratings as indicated.

2.1.8 Conduit and Tubing

2.1.8.1 NOT USED
2.1.8.2 NOT USED
2.1.8.3 NOT USED

2.1.8.4 Flexible Conduit, Steel and Plastic

General-purpose type, \-UL 1-\; liquid tight, \-UL 360-\, and \-UL 1660-\

2.1.8.5 Intermediate Metal Conduit (IMC)

\-UL 1242-\. Type I

2.1.8.6 PVC Coated Rigid Steel Conduit

\-NEMA RN 1-\.

2.1.8.7 NOT USED

2.1.8.8 Rigid Metal Conduit

\-UL 6-\.

2.1.9 NOT USED

2.1.10 Conduit and Device Boxes and Fittings

2.1.10.1 Boxes, Metallic Outlet

\-NEMA OS 1-\ and \-UL 514A-\.

2.1.10.2 NOT USED

2.1.10.3 Boxes, Outlet for Use in Hazardous (Classified) Locations

\-UL 886-\.

2.1.10.4 Boxes, Switch (Enclosed), Surface-Mounted

\-UL 98-\.

2.1.10.5 Fittings for Conduit and Outlet Boxes

\-UL 514B-\.

2.1.10.6 Fittings for Use in Hazardous (Classified) Locations

\-UL 886-\.

2.1.11 Conduit Coatings

2.1.11.1 Plastic Resin System

\-NEMA RN 1-\, Type A-40.

2.1.12 Connectors, Wire Pressure

2.1.12.1 Copper Conductors

\-UL 486A-\.

2.1.12.2 NOT USED

2.1.13 Electrical Grounding and Bonding Equipment

\-UL 467-\.

2.1.13.1 Ground Rods

Ground rods shall be of copper-clad steel conforming to \-UL 467-\ not less than 3/4 inch in diameter by 10 feet in length driven full length into the earth.

2.1.13.2 NOT USED

2.1.14 Enclosures

\-NEMA ICS 6-\ or \-NEMA 250-\ or \-UL 698-\ for use in hazardous (classified) locations, unless otherwise specified.

2.1.14.1 Cabinets and Boxes

\-UL 50-\.

2.1.14.2 Circuit Breaker

\-UL 489-\.

2.1.14.3 Circuit Breaker for Use in Hazardous (Classified) Locations

\-UL 877-\.

2.1.15 Fixtures, Lighting and Fixture Accessories/Components

Standard Lighting Fixtures\

Standard Drawing 40-06-04 sheets referenced hereinafter and enclosed as an integral part of these specifications, if any. Fixtures, accessories and components, including ballasts, lampholders, lamps, starters and starter holders, shall conform to industry standards specified below.

2.1.15.1 NOT USED
2.1.15.2 NOT USED
2.1.15.3 NOT USED

2.1.15.4 High-Intensity-Discharge

a. Fixture: \-NEMA LE 4-\ for ceiling compatibility of recessed fixtures and \-UL 1572-\.

b. Ballasts: \-ANSI C82.4-\ for multiple supply types and \-UL 1029-\.

2.1.16 Fuses and Fuseholders

2.1.16.1 Fuses, Low Voltage Cartridge Type

\-NEMA FU 1-\.

2.1.16.2 NOT USED
2.1.16.3 NOT USED
2.1.16.4 NOT USED
2.1.16.5 NOT USED
2.1.16.6 NOT USED
2.1.16.7 NOT USED
2.1.16.8 NOT USED
2.1.16.9 NOT USED

2.1.16.10 Fuseholders

\-UL 512-\.

2.1.17 NOT USED
2.1.18 NOT USED

2.1.19 Motors, AC, Fractional and Integral Horsepower (500 Hp and Smaller)

\-NEMA MG 1-\ and \-UL 1004-\ for motors and \-NEMA MG 10-\ for energy management selection of polyphase motors, and \-UL 674-\, \-NEMA ICS 2-\, \-NEMA ICS 3-\ and \-NEMA ICS 6-\, and \-UL 508-\.

2.1.20 Motor Controls

\-NEMA ICS 1-\, \-NEMA ICS 2-\, \-NEMA ICS 3-\ and \-NEMA ICS 6-\, and \-UL 508-\ and \-UL 845-\.

2.1.21 Panelboards

Dead-front construction, \-NEMA PB 1-\ and \-UL 67-\.

2.1.22 Receptacles

2.1.22.1 NOT USED

2.1.22.2 General Grade

\-NEMA WD 1-\.

2.1.22.3 Standard Grade

\-UL 498-\.

2.1.22.4 Ground Fault Interrupters

\-UL 943-\, Class A or B.

2.1.22.5 Hazardous (Classified) Locations

\-UL 1010-\.

2.1.23 Service Equipment
\-UL 869A-\.

2.1.24 Splice, Conductor

\-UL 486C-\.

2.1.25 NOT USED
2.1.26 NOT USED

2.1.27 Switches

\-UL 20-\. (Hazardous Locations: \-UL 894-\).

2.1.27.1 Enclosed Safety Switches

\-NEMA KS 1-\, Type HD or Type GD with general purpose enclosures unless otherwise specified.

2.1.27.2 Snap Switches

2.1.28 Tapes

2.1.28.1 Plastic Tape

\-UL 510-\.

2.1.28.2 Rubber Tape

\-UL 510-\.

2.1.29 *TRANSFORMERS*

2.1.29.1 Conventional Dry-Type

\-IEEE C57.12.01-\, and \-UL 1561-\ in addition to the specific standards referenced below.

a. Distribution: Ventilated, 1 to 500 kVA, single-phase, and 15 to 500 kVA, three-phase with high-voltage 601 to 34500 volts, low-voltage 120-600 volts: \-ANSI C57.12.50-\.

b. Specialty or General (Purpose) Applications: \-NEMA ST 20-\ and \-UL 506-\ unless otherwise shown or specified.

c. Instrument: \-ANSI C12.11-\ and \-IEEE C57.13-\ with current ratio or voltage ratings shown or specified.

2.1.29.2 NOT USED

2.1.29.3 Pad-Mounted Compartmental

\-ANSI C57.12.26-\, \-ANSI C57.12.27-\, \-IEEE C57.12.00-\, \-IEEE C57.12.80-\, \-IEEE C57.12.90-\, \-IEEE C57.98-\, \-IEEE C57.100-\, \-IEEE C57.105-\.

2.1.30 NOT USED
2.1.31 NOT USED

2.1.32 Wiring Devices

\-NEMA WD 1-\ for general-purpose wiring devices, and \-NEMA WD 6-\ for dimensional requirements of wiring devices.

2.1.32 *Heat Tape*

2.1.32.1 Heating tape shall provide freeze protection for the condensate drain system.

2.1.32.2 Explosion proof heating tape shall be FM or UL listed for use in hazardous areas as shown on the drawings. The cable shall be self-regulating, moisture proof and be low wattage type with a continuous sheath ground and with a plastic outer layer.

2.1.32.3 Heat tape shall be installed over adhesive backed aluminum tape. The aluminum tape shall be supplied by the heat tape manufacturer.

2.1.32.4 Explosion proof temperature controller shall be FM or UL listed for use in hazardous areas. The controller shall be a bulb and capillary tube type with

the temperature set point dial located under a tamperproof cover. The operating range shall be approximately 0°F to 250°F.

PART 3 EXECUTION

3.1 GROUNDING

Grounding shall be in conformance with \-NFPA 70-\, the contract drawings, and the following specifications.

3.1.1 Service Grounding

The service ground connection shall be made to the neutral conductor of the wiring system at the main service equipment and shall be extended to the grounding electrode system. The grounding electrode system shall be as stated in the NEC with the additional requirement that at least one driven ground rod shall be provided in addition to other available electrodes and a bonding connection shall not be provided to the exterior portion of metallic underground water pipe (even if an isolating fitting is not presently installed). Provide a minimum of two driven rods if no other NEC electrodes are available. Interior metallic water pipe shall be bonded to the grounding electrode system. Connection to the water pipe shall be made by a suitable ground clamp. A separate grounding connection shall be made from the neutral conductor of separately derived systems to the main service ground electrodes.

3.1.2 Equipment Grounding

Except where specifically indicated otherwise, all exposed noncurrent-carrying metallic parts of electrical equipment, metallic raceway systems, metallic cable armor, grounding conductor in nonmetallic raceways shall be grounded. In addition to the metallic raceway used as a grounding conductor, a separate green wire grounding conductor shall be provided for all circuits. The additional green wire shall be connected to the receptacle ground terminals or to bonding jumpers from receptacles and shall be carried through all feeder and service ducts to the service ground point or separately derived source ground. Receptacles shall either be bonded to the device box or shall be a self-grounding type receptacle. Whenever feeders are paralleled using nonmetallic conduit, a full size equipment grounding conductor shall be included in each conduit per \-NFPA No. 70-\.

3.1.3 Continuity

The electrical continuity of metallic raceway systems and cable armor shall be assured by removing any portions of nonconducting coatings which might interrupt or diminish such continuity. Grounding continuity between recessed outlet boxes and the grounding circuits of receptacles shall be established by means of a bonding jumper between the outlet box and the receptacle grounding terminal or by the use of a self grounding receptacle. Where surface-mounted boxes and conventional receptacles are used, the retainer washers on the receptacle mounting screws shall be removed to permit metal-to-metal contact between the yoke and the outlet box.

3.1.4 Communications Grounding Provisions

Grounding for telephone service shall be provided by installing bare #6 copper wire in 1/2-inch conduit between automatic telephone dialer cabinet and building electric service ground.

3.1.5 Ground Rods

The maximum resistance measured in accordance with \-IEEE Std 81-\ of a driven ground shall not exceed 25 ohms under normally dry conditions. If this resistance cannot be obtained with a single rod, two additional rods not less than 6 feet on centers, or if sectional type rods are used, two additional sections may be coupled and driven with the first rod. In high-ground-resistance, UL listed chemically charged ground rods may be used. If the resultant resistance exceeds 25 ohms measured not less than 24 hours after rainfall, the Contracting Officer shall be notified immediately. All measurements shall be made in the presence of the Contracting Officer. Connections below grade shall be fusion welded. Connections above grade shall be fusion welded or shall use \-UL 467-\ approved connectors.

3.1.6 NOT USED

3.1.7 Ground Wire (see para. 3.1.2)

3.2 WIRING METHODS

3.2.1 General Requirements

Unless otherwise indicated, wiring shall consist of insulated conductors installed in rigid zinc-coated steel conduit.

3.2.2 Conduit and Tubing Systems

Conduit shall be installed as indicated. Conduit sizes shown are based on use of copper conductors and on the use of TW insulation for conductors smaller than No. 8 AWG, THW insulation for conductors No. 8 AWG and larger, except where otherwise indicated. Minimum size of raceways shall be 1/2 inch. Only metal conduits will be permitted when conduits are required for shielding or other special purposes indicated, or when required by conformance to \-NFPA 70-\. Nonmetallic conduit and tubing may be used in areas designated as damp, wet or corrosive locations when permitted by \-NFPA 70-\ and the conduit or tubing system is provided with appropriate boxes, covers, clamps, screws or other appropriate type of fittings. Except as otherwise specified, IMC (Type I) may be used as an option for rigid steel conduit in areas as permitted by \-NFPA 70-\ except as hereinafter specified. Bushings shall be installed on the ends of all conduits and shall be of the insulating type where required by \-NFPA No. 70-\.

3.2.2.1 Below Slab-on-Grade or in the Ground

All electrical wiring below slab-on-grade shall be protected by a conduit system. Conduit passing vertically through slabs-on-grade shall be rigid steel or IMC.

Rigid steel or IMC conduits installed below slab-on-grade or in the earth shall be field-wrapped with 0.010-inch thick pipe-wrapping plastic tape applied with a 50-percent overlay, or shall have a factory-applied polyvinyl chloride, plastic resin, epoxy or coal-tar coating system. Zinc coating may be omitted from rigid steel conduit, or from IMC which has a factory-applied epoxy system.

3.2.2.2 NOT USED

3.2.2.3 Exposed Cable and Raceways

Exposed raceways shall be installed parallel or perpendicular to walls, structural members, or intersections of vertical planes and ceilings.

3.2.2.4 Changes in Direction of Runs

Changes in direction of runs shall be made with symmetrical bends or cast-metal fittings. Field-made bends and offsets shall be made with an approved hickey or conduit-bending machine. Crushed or deformed raceways shall not be installed. Trapped raceways in damp and wet locations shall be avoided where possible. Care shall be taken to prevent the lodgment of plaster, dirt, or trash in raceways, boxes, fittings and equipment during the course of construction. Clogged raceways shall be entirely freed of obstructions or shall be replaced.

3.2.2.5 Supports

Raceways shall be securely and rigidly fastened in place at intervals of not more than 10 feet and within 3 feet of boxes, cabinets, and fittings, with approved pipe straps, wall brackets, conduit clamps, conduit hangers, threaded C-clamps with retainers, or ceiling trapeze. C-clamps or beam clamps shall have strap or rod-type retainers. Loads and supports shall be coordinated with supporting structure to prevent damage or deformation to the structures, but no load shall be applied to joist bridging. Fastenings shall be by wood screws or screw-type nails to wood; by toggle bolts on hollow masonry units; by expansion bolts on concrete or brick; by machine screws, welded threaded studs, heat-treated or spring-steel-tension clamps on steel work. Nail-type nylon anchors or threaded studs driven in by a powder charge and provided with lock washers and nuts may be used in lieu of expansion bolts or machine screws. Raceways or pipe straps shall not be welded to steel structures. Holes cut to a depth of more than 1-1/2 inches in reinforced concrete beams or to a depth of more than 3/4-inch in concrete joists shall avoid cutting the main reinforcing bars. Holes not used shall be filled. In partitions of light steel construction, sheet-metal screws may be used. Conduit shall not be supported using wire or nylon ties. Raceways shall be installed as a complete system and be independently supported from the structure. Upper raceways shall not be the support of lower raceways. Supporting means will not be shared between electrical raceways and mechanical piping or ducts and shall not be fastened to hung ceiling supports. Conduits shall be fastened to all sheet-metal boxes and cabinets with two locknuts where required by the \-NFPA 70-\, where insulating bushings are used, and where bushings cannot be brought into firm contact with the box; otherwise, a single locknut and bushing may be used. Bushings shall be installed on the ends of all

conduits and shall be of the insulating type where required by the \-NFPA 70-\.

3.2.2.6 NOT USED
3.2.2.7 NOT USED
3.2.2.8 NOT USED

3.2.2.9 Pull Wires

A pull wire shall be inserted in each empty raceway in which wiring is to be installed by others if the raceway is more than 50 feet in length and contains more than the equivalent of two 90-degree bends, or where the raceway is more than 150 feet in length. The pull wire shall be of No. 14 AWG zinc-coated steel, or of plastic having not less than 200-pound tensile strength. Not less than 10 inches of slack shall be left at each end of the pull wire.

3.2.3 NOT USED
3.2.4 NOT USED
3.2.5 NOT USED
3.2.6 NOT USED

3.2.7 Cables and Conductors

Conductors in raceways and cable shall be of copper. Wire connectors of insulating material or solderless pressure connectors properly taped shall be utilized for all splices where possible. Soldered mechanical joints insulated with tape shall be kept to a minimum. Conductors with 75°C must be supplied with terminating components approved for use at that temperature. The temperature rating must be marked on all terminals sized #12 through #1 AWG and intended for use at 75°C. Connection of oversize conductors to equipment or devices having smaller terminals shall be made with suitable connectors or adapters which will accommodate the entire conductor cross section (trimming "excess" stranding is not acceptable).

3.2.7.1 Sizes

Sizes shall be not less than indicated. Branch-circuit conductors shall be not smaller than No. 12 AWG. Conductors for branch circuits of 120 volts more than 100 feet long and of 277 volts more than 230 feet long, from panel to load center, shall be No. 10 AWG. Class 1 remote control and signal circuit conductors shall be not less than No. 14 AWG. Class 2 remote control and signal circuit conductors shall be not less than No. 16 AWG. The conductor sizes shown are based on the use of TW insulation for conductors smaller than No. 1/0 AWG and THW insulation for conductors No. 1/0 AWG and larger, except where otherwise indicated. Other acceptable NFPA 70 types of insulated conductors of equivalent or greater ampacity or higher temperature rating may be substituted.

3.2.7.2 Insulation

Conductor insulation shall be suitable for the application and shall have a temperature rating of not less than 75 degrees C. except sizes smaller than No. 1/0 AWG may be 60 degrees C.

3.2.7.3 Power Conductor Phase Identification

Conductor identification of each phase shall be by color-coded insulation. The color of the insulation of the ungrounded conductors of different voltage systems shall be as follows:

208Y/120 volt, 3-phase: black, red, and blue
480Y/277 volt, 3-phase: brown, orange, and yellow

In multiphase circuits, the above colors, left to right, shall be connected to A, B, and C phases, respectively. Phases must be identified by tags or labels wherever the above format has not been followed. Conductor phase and voltage identification shall be made by color-coded insulation for all conductors smaller than No. 6 AWG. For conductors No. 6 AWG and larger, identification shall be made by color-coded insulation, or conductors with black insulation may be furnished and identified by the use of bands of colored electrical tape wrapped around the insulation 3 inches apart for the entire length within the indicated enclosure. Conductor identification shall be provided within each enclosure where a tap, splice, or termination is made. Phase identification by a particular color shall be maintained continuously for the length of a circuit, including junctions. Where insulation of the required color is not available, electrical tape of the required color shall be half-lapped for a 3-inch minimum within the enclosures.

3.2.7.4 Control Conductor Identification

Control circuit conductor identification shall be made by color-coded insulated conductors, plastic-coated self-sticking printed markers, permanently attached stamped metal foil markers, or equivalent means as approved. Control circuit terminals of equipment shall be properly identified. Terminal and conductor identification shall match that shown on approved detail drawings. Hand lettering or marking is not acceptable. Control conductors shall not repeat the power circuit color coding unless control wiring is clearly distinguishable by application or by added identification.

3.3 BOXES AND SUPPORTS

Boxes shall be provided in the wiring or raceway systems wherever required for pulling of wires, making connections, and mounting of devices or fixtures. Each box must have the volume required by NFPA No. 70 for the number of conductors enclosed in the box.

3.3.1 Application Requirements

Boxes for metallic raceways, 4-inch by 4-inch nominal size and smaller shall be of the cast-metal hub type when surface mounted on outside of exterior surfaces, when located in hazardous areas. Large size boxes shall be NEMA 4 or as shown.

Cast-metal boxes installed in wet locations shall be gasketed. Indicated elevations are approximate, except where minimum mounting heights for hazardous areas are required by \-NFPA No. 70-\.

3.3.1.1 Supporting Provisions

Boxes and supports shall be fastened to wood with wood screws or screw-type nails of equal holding strength, with bolts and metal expansion shields on concrete, and with machine screws or welded studs on steel work. Threaded studs driven in by powder charge and provided with lockwashers and nuts, or nail-type nylon anchors may be used in lieu of expansion shields, or machine screws.

3.3.2 NOT USED
3.3.3 NOT USED

3.3.4 Boxes For Lighting Applications

Boxes for mounting lighting fixtures shall be not less than 4 inches square except that smaller boxes may be installed as required by fixture configuration, as approved. Cast boxes may be 3-5/8 inches round by 2 inches deep minimum.

3.3.5 NOT USED
3.3.6 NOT USED
3.3.7 NOT USED
3.3.8 NOT USED

3.3.9 Conduit Stub-Ups

Conduits stubbed up through concrete floors for connections to freestanding equipment shall be provided with a short elbow and an adjustable top or coupling threaded inside for plugs, set flush with the finished floor. Wiring shall be extended in rigid threaded conduit to equipment, except that where required, liquid-tight flexible steel conduit may be used 24 inches above the floor. Screwdriver-operated threaded flush plugs shall be installed in conduits from which no equipment connections are made to suit the devices installed.

3.4 NOT USED

3.5 RECEPTACLES

(See paragraph titled GROUNDING). Device shall be straight blade type. General use 15- and 20-ampere receptacles must be standard grade ("general duty".

3.5.1 Conventional Receptacles, Single and Duplex

Single and duplex receptacles for the ordinary application shall be 125 volts, two-pole, three-wire, grounding type with polarized parallel slots. Devices rated 15 amperes (NEMA 5-15) may be furnished for all devices not specifically required to be 20 ampere (NEMA 5-20). Bodies shall be of ivory phenolic compound supported by mounting strap having plaster ears. Contact arrangement shall be such that contact is made on two sides of an inserted blade. Receptacle shall

be side- or back-wired with two screws per terminal. The third grounding pole shall be connected to the metal mounting yoke.

3.5.2 Weatherproof Receptacles

Weatherproof receptacles shown shall be mounted in a box with a gasketed, weatherproof, cast-metal cover plate and gasketed cap over each receptacle opening. The cap shall be provided with a spring-hinged flap.

3.5.3 NOT USED
3.5.4 NOT USED
3.5.5 NOT USED
3.5.6 NOT USED
3.5.7 NOT USED
3.5.8 NOT USED
3.5.9 NOT USED

3.5.10 Ground Fault Provisions

Ground fault circuit interrupting (GFI or GFCI) capability shall be provided as required by \-NFPA 70-\ and for receptacles as indicated on the plans. Designated receptacles must incorporate ground fault circuit interrupting (GFI or GFCI) capability. Features shall include test, reset, and trip indication provisions. Conventional receptacles located downstream of a feed through type GFI receptacle must be labeled (on or adjacent to device plate) to identify the GFI protection and location of the device with the reset provisions (example: "Ground Fault Protected, Reset in Room xxx").

3.6 NOT USED

3.7 SERVICE AND METERING EQUIPMENT

3.7.1 Disconnecting Provisions

Main service-disconnecting means shall be of the enclosed molded-case circuit breaker type as indicated with external handle for manual operation. When service disconnecting means is a part of an equipment assembly, the assembly shall be listed as suitable for service entrance equipment. (See paragraph: PANELBOARDS.) Disconnecting provisions for individual loads shall be molded case circuit breaker type as indicated on the plans. Enclosures for service disconnect shall be weatherproof NEMA 4.

3.7.2 Metering Equipment

Current transformers (CTs) and voltage transformers (VTs) conforming to ANSI C12.11 and IEEE C57.13 shall be included with ratios appropriate for use on a 480 volt, 3-phase, 4-wire system. Meter and socket will be furnished and installed by the local power company. The Contractor shall make all arrangements directly with the local power company. The Contractor shall include all power company costs for providing the electrical service in his contract bid price. The

Contractor SHALL PAY the local power company for the new electrical service. The local power company can be contacted as follows:

ATTN: John Walters
Indiana Michigan Power
3340 Old US 20 East
Olkhart, Indiana 46516

NOTE: Mr. Walters can be contacted by telephone number 219-296-5042 or fax number 219-296-5000.

3.7.3 NOT USED

3.7.4 Surge Protection

Install secondary surge arrestors on power feeders at locations indicated on the plans. Arrestors shall be 150 volts to ground for 208Y/120 volt services, 600V on all other configurations.

3.8 PANELBOARDS

Nameplates shall be as approved. Directories shall be typed to indicate load served by each circuit and mounted in holder behind a clear protective covering. Buses shall be copper. Submittals shall identify bus material. A circuit breaker or switch, which is to be used as a motor disconnecting means must have provisions to be locked in the open position.

3.8.1 NOT USED

3.8.2 Panelboards

Panelboards shall be circuit breaker equipped and be equipped with 150 volt surge arresters. Switches serving as motor disconnect means shall be horsepower rated in conformance with \-UL 98-\.

3.9 NOT USED
3.10 NOT USED

3.11 FUSES

Equipment provided under this contract (switches) shall be provided with a complete set of properly rated fuses. If the type is not otherwise identified, the fuse sizes shown on the plans assume Class RK1 dual element fuses for mixed loads. Cartridge fuses shall be used for circuits rated in excess of 30 amperes, 125 volts, except where indicated otherwise on the plans.

3.11.1 NOT USED
3.11.2 NOT USED

3.11.3 Cartridge Fuses; Current-Limiting Type

Cartridge fuses, current-limiting type, Class RK1shall have tested interrupting capacity not less than 100,000] amperes. Fuse-holders shall be the type that will reject all Class H fuses.

3.12 UNDERGROUND-SERVICE CONDUITS

Empty conduits for underground telephone cable shall be installed as indicated. Except where otherwise indicated, conduits shall terminate approximately 5 feet beyond the equipment pad and 3 feet below finished grade, with the outside ends bushed and plugged or capped.

3.13 AERIAL SERVICE

Aerial power-service conductors which originate at a power-supply transformer shall be extended to a service pole, meter and weatherproof fusible disconnect switch by the local power company. Material and labor shall be provided by the power company and the Contractor shall schedule and pay for the service installation as shown on the plans as part of the basic contract.

3.14 MOTORS

(Also see paragraph: EQUIPMENT CONNECTIONS.) Each motor shall conform to the HP and voltage ratings indicated, and shall have a service-factor and other characteristics that are essential to the proper application and performance of the motors under conditions shown or specified.Unless otherwise specified, all motors shall be explosion-proof, and continuous-duty classification based on a 40-degree C ambient temperature reference. Each motor, motor controller, and/or disconnect switch hereinafter specified shall be clearly labeled on the cover to indicate the equipment controlled. The labeling shall be consistent with subparagraph 1.3.5: Identification Nameplates of this section.

3.14.1 Size Selection

The Contractor shall be responsible for selecting the actual horsepower ratings and other motor requirements necessary for the applications indicated. Motors shall be of sufficient size for the duty to be performed and shall not exceed the full-load rating when the driven equipment is operating at specified capacity under the most severe conditions likely to be encountered. Motor service factor cannot be considered in selection of horsepower size. The standard service factor must be available undiminished in the field installation. The horsepower ratings indicated on electrical plans are for guidance only and do not limit the equipment size. When electrically driven equipment furnished under other sections of these specifications materially differs from the contemplated design, the Contractor shall make the necessary adjustments to the wiring, disconnect devices, starters, controls, and branch-circuit protection to accommodate the equipment actually installed.

3.14.2 Altitude Derating

All motors installed above 3300 feet and below 9000 feet shall have a continuously rated service factor of 1.15 or greater.

3.14.3 Energy Conservation

Motors having ratings over 2 horsepower (HP) shall be of the energy-efficient type; having an efficiency rating of not less than 90 percent whether or not motors are separately provided or included in equipment assemblies specified in other sections of these specifications. Other motors of different speed or housing classification shall also be of the energy efficient type, as advertised by the motor manufacturer, with efficiencies greater than the standard line (but not less than 90%). Motor efficiencies shall have been verified in accordance with NEMA Std. MG 1-12.53.a., and determined using the dynamometer method as described in IEEE Std. 112, Method B. All shop drawing submittals on motor driven equipment shall include the motor efficiency.

3.15 *MOTOR CONTROL*

(Also see paragraph: EQUIPMENT CONNECTIONS.) Each motor requiring a single control shall be provided with a suitable controller or devices that will perform the functions as specified for the respective motors. In the absence of specific instructions in other sections of the specifications or on the plans, a controller may be furnished with the motor or the equipment it controls, or it may be separately furnished and mounted on the nearest clear wall space at the Contractor's option. Specific control features shall be provided as indicated on the plans and elsewhere in the specifications. All control shall be 120 volts or less unless otherwise indicated. Auxiliary contacts shall be included as required to accommodate the specific control requirements called for elsewhere in the specifications or on the plans.

3.15.1 Controller Application

Single- or double-pole tumbler switches specifically designed for alternating-current operation only may be used as manual controllers for single-phase motors having a current rating not in excess of 80 percent of the switch rating. Automatic control devices such as thermostats, float, or pressure switches may control the starting and stopping of motors directly, provided the devices used are designed for that purpose and have an adequate horsepower rating. When the automatic-control device actuates the pilot control circuit of a magnetic starter, the latter shall be provided with a three-position selector switch marked MANUAL-OFF-AUTOMATIC. When combination manual- and automatic-control is specified and the automatic-control device operates the motor directly, a switch of the double-throw, three-position tumbler, or rotary type shall be provided for the manual control. Connections to the selector switch shall be such that only the normal automatic regulatory control devices will be bypassed when the switch is in the Manual position; all safety control devices, such as low- or high-pressure cutouts, high-temperature cutouts, and motor-overload protective devices, shall be connected in the motor-control circuit in both the Manual and the Automatic positions of the selector switch. Control circuit connections to

any MANUAL-OFF-AUTOMATIC switch or to more than one automatic regulatory control device shall be made in accordance with wiring diagrams approved by the Contracting Officer unless such diagram is included on the drawings.

3.15.2 Overload Protection

Each motor of 1/8 horsepower or larger shall be provided with thermal-overload protection. Polyphase motors shall have overload protection in each ungrounded conductor. The overload protection device shall be provided either integral with the motor or controller, or shall be mounted in a separate enclosure. Unless otherwise specified, the protective device shall be of the manual reset type. In magnetic starters, the overload contacts shall be connected on the grounded side (i.e., downstream) of the starter operating coil per NEMA ICS 2.

3.16 MOTOR-DISCONNECT MEANS

(Also see paragraph: Equipment Connections) Each motor shall be provided with a disconnecting means when required by the \-NFPA 70-\ even though not indicated. Each disconnect shall be located in sight from the motor controller location. The disconnecting means shall be capable of being locked in the open position when the motor is not in sight of the switch and controller unless another disconnecting means is located at the motor. For single-phase motors, a single-or double-pole toggle switch, rated only for alternating current, will be acceptable for capacities less than 30 amperes, provided the ampere rating of the switch is at least 125 percent of the motor rating. Switches shall disconnect all ungrounded conductors.

3.17 *TRANSFORMERS*\

Only single- and three-phase transformers having two windings per phase will be approved. Full-capacity standard NEMA taps shall be provided in the primary windings of transformers having a primary rating in excess of 600 volts. Unless indicated otherwise, three-phase transformers shall be connected only in a delta-wye or wye-delta configuration. "T" connections may be used for transformers rated at 15 kVA or below. The insulation on transformer windings may be the manufacturer's standard for transformers rated for operation in a 40-degree Celsius ambient temperature unless a higher-temperature insulation is shown, specified or required by the application indicated. The basic impulse level (BIL) of individual transformers shall be as stated in the following paragraphs. The average sound level in decibels (dB) of transformers shall not exceed the following dB level for the applicable kVA rating range listed:

Transformer Rating, kVA	Average Sound Level, Decibels
1-50	50
51-150	55
151-300	58

3.17.1 Conventional Dry-Type Transformers

Transformers having the primary or higher-voltage winding rated at 600 volts or less and a secondary or lower-voltage winding rated at 240 volts or less may be manufacturer's standard ventilated or enclosed, self-cooled type of transformer unless otherwise shown, specified or required for proper and safe application. (Standard transformers must have a Class 220 (formerly Class H) minimum insulation systems and be suitable for operation at rated load in a 40 degree C ambient without exceeding a 150 degree C rise.) Transformers shown with primary ratings in excess of 600 volts shall have the NEMA 220-degree C insulation and a temperature rise of 80 degrees C maximum above ambient at rated load. Similarly, transformers having primary windings rated at 480 volts or less and a kVA rating of 150 or larger shall have Class H insulation (Class 220) and a 115-degree C temperature rise.

3.17.2 NOT USED

3.17.3 NOT USED

3.17.4 Pad-Mounted Tamperproof Compartmental Transformer Stations

Pad-mounted tamperproof compartmental transformer stations shall be of the loop feed type with one set of high-voltage bushings used for cable feed and the other set of high-voltage bushings available for surge protection devices. Protective devices shall have ratings compatible with the associated transformer rating. Transformer stations shall be assembled and coordinated by one manufacturer and each transformer station shall be shipped as a complete unit so that field installation requirements are limited to mounting each unit on a concrete pad and connecting it to primary and secondary lines. Transformer stations shall be provided with a corrosion-resistant finish in accordance with paragraph FACTORY COATING and FINISHING. Stainless steel pins and hinges shall be provided. Barriers are required between high- and low-voltage compartments. High-voltage compartment doors shall be interlocked with low-voltage compartment doors to prevent access to any high-voltage section unless its associated low-voltage section door has first been opened. Compartments shall be sized to meet the specific dimensional requirements of \-ANSI C57.12.26-\. Pentahead locking bolts shall be provided.

3.17.4.1 High-Voltage Compartments

High-voltage compartments shall be dead-front construction. Primary protection shall include load-break switching, drawout dry-well-mounted current-limiting fuses, and medium-voltage separable connectors. Switches shall be of the group-operated type. Switches may be mounted inside transformer tanks with switch operating handles located in high-voltage compartments and equipped with metal loops for hook stick operation. Fuses shall be interlocked with switches so that fuses can be removed only when the associated switch is in the "OFF" position. Adjacent to medium-voltage cable connections, a nameplate or equivalent stencilled inscription shall be provided inscribed "Do not open cable connectors unless switch is off." Adjacent to switches, nameplates shall identify switch operating handles and "ON" and "OFF" positions. Surge protection shall be provided consisting of combined dead-front molded-rubber separable connectors

and zinc-oxide gapless varistor surge protectors. Combination units shall meet the applicable requirements of \-IEEE Std 386-\ and \-NEMA LA 1-\.

3.17.4.2 Transformer Tank Sections

Transformers shall be three-phase Delta-wye, oil-immersed units with two separate windings per phase. Capacities and ratings shall be as shown. Four 2-1/2 percent rated kVA high-voltage taps shall be provided below rated primary voltage. Operating handles for primary tap changers shall be located within high-voltage compartments, externally to transformer tanks.

3.17.4.3 Low-Voltage Compartments

Neutrals shall be provided with fully-insulated bushings. No ground straps shall be provided between neutrals and ground pads. Clamp type cable terminations, suitable for both copper and aluminum conductors entering from below, shall be provided as necessary.

3.17.4.4 Accessories

Instruction nameplates shall include the number of gallons of transformer oil. High-voltage warning signs shall be permanently attached to each side of transformer stations. Stainless steel ground connection pads shall be provided in both the high- and low-voltage compartments. Dial-type thermometer, liquid-level gauge, and drain valve with built-in sampling device shall be provided for each transformer station.

3.18 LAMPS AND LIGHTING FIXTURES

Standard lighting fixtures shall be as detailed on standard drawing series 40-06-04. Lamps shown on the standard drawing series 40-06-04 represent generic categories. Actual size and performance characteristics shall be determined from the lamp codes designated on the plans or in the body of the specifications.

3.18.1 Lamps

Lamps of the proper type, wattage, and voltage rating indicated shall be delivered to the project in the original cartons and installed in the fixtures just prior to the completion of the project.

3.18.1.1 NOT USED
3.18.1.2 NOT USED

3.18.1.3 High-Intensity-Discharge

High-intensity-discharge lamps shall be the high-pressure-sodium type unless otherwise indicated, shown, or approved.

3.18.2 Fixtures

Fixtures shall be as shown and shall conform to the following specifications and shall be as detailed on standard Drawing No. 40-06-04, which accompanies and forms a part of this specification for the types indicated. Illustrations shown on these sheets are indicative of the general type desired and are not intended to restrict selection to fixtures of any particular manufacturer. Fixtures of similar designs and equivalent energy efficiency, light-distribution and brightness characteristics, and of equal finish and quality will be acceptable if approved. Ballasted fixtures shall have ballasts which are compatible with the specific type and rating of lamps indicated and shall comply with the applicable provisions of the publications referenced. Fixtures containing radioactive materials are not acceptable.

3.18.2.1 Accessories

Accessories such as straps, mounting plates, nipples, or brackets shall be provided for proper installation.

3.18.2.2 NOT USED
3.18.2.3 NOT USED
3.18.2.4 NOT USED

3.18.2.5 Ballasts

Ballasts shall be provided to suit the lamp and circuit specified. High-intensity discharge ballasts shall be constant wattage or regulating type and be suitable for operation down to minus 20 degrees F.

3.18.2.6 NOT USED

3.18.2.7 Labels

Fixtures in which lamps of higher wattage than the design lamp could be inserted shall be provided with labels identifying the design lamp.

3.19 NOT USED
3.20 NOT USED

3.21 *AUTOMATIC TELEPHONE DIALER*

The unit shall be designed to respond to a change in condition by executing a series of telephone calls through standard telephone lines and repeating a pre-programmed message. The messages shall be actual user voices, electronically stored in the system memory. The unit shall execute telephone calls to at least three different telephone numbers, one for the Operator (common alarm) and two spare (for now).

3.21.1 Required Features:

3.21.1.1 Inputs: 8-digital inputs plus power.

3.21.1.2 Detection for recall: The unit shall detect a busy signal and automatically proceed to the next telephone number programmed for the fault.

3.21.1.3 Display: minimum 4-line, 40-character, with a LCD clock.

3.21.1.4 Power Supply: 120 Vac, 60 Hz.

3.21.1.5 Power Failure Detection: Automatic.

3.21.1.6 Backup Power Supply: Unit shall have a backup power supply that allows calls to be made in case of a power failure in the treatment plant.

3.21.1.7 Jacks: a telephone jack shall be provided within the cabinet and shall comply with \-CFR 47 Part 68-\, plastic shall be class VO in accordance with \-UL 94-\.

3.22 *HEAT TAPE*

3.22.1 Heating tape shall maintain the condensate drain piping at a temperature of 40°F. Calculations for the heating tape shall be based on a winter design temperature of minus 20°F. and the calculations shall be submitted for approval.

3.22.2 The heat tape shall be installed over a factory furnished aluminum tape designed to aid in distributing the heat over the pipe surface and to prevent the plastic pipe from excessive heat that would melt or distort the pipe.

3.22.3 The temperature controller bulb shall be installed according to the manufacturer's instructions to ensure that the piping system is protected.

3.23 EQUIPMENT CONNECTIONS

(Also see subparagraph: APPLICATION OF THIS SECTION). All wiring not furnished and installed under other sections of the specifications for the connection of electrical equipment as indicated on the drawings shall be furnished and installed under this section of the specifications. Power connections to motors, appliances and other fixed equipment shall be provided under this section and shall comply with the applicable requirements of paragraph WIRING METHODS. Flexible conduits 6 feet or less in length shall be provided to all electrical equipment subject to periodic removal, vibration, or movement and for all motors. All motors shall be provided with separate grounding conductors. Liquid-tight conduits shall be used in damp or wet locations.

3.23.1 MOTORS AND *MOTOR CONTROL*

Motors will be furnished under other sections of the specifications unless otherwise indicated. Power feeders, and control equipment (such as starters) which act directly on power feeder, shall be furnished and connected under this section of the specifications unless shown or specified otherwise. Except as otherwise specifically noted, automatic-control, signaling, regulatory, and safety control devices are not included in this section of the specifications, but shall be furnished and installed under other sections of the specifications. Control wiring not shown on the drawings shall be furnished under the other sections of the specifications. Protective devices (overloads, fuses, limit switches, etc.) which act on the motor feeder directly shall be furnished under this section.

3.23.2 NOT USED

3.23.3 NOT USED

3.23.4 Disconnecting Provisions

When a process control, temperature control, or other auxiliary panel is furnished without an interrupting device, an external switch that will disconnect all ungrounded conductors shall be installed.

3.24 NOT USED

3.25 PAINTING AND FINISHING

Field-applied paint on exposed surfaces shall be provided under Section \=09900=\ PAINTING, GENERAL.

3.26 REPAIR OF EXISTING WORK

The work shall be carefully laid out in advance, and where cutting, channeling, chasing, or drilling of floors, walls, partitions, ceiling, or other surfaces is necessary for the proper installation, support, or anchorage of the conduit, raceways, or other electrical work, this work shall be carefully done, and any damage to building, piping, or equipment shall be repaired by skilled mechanics of the trades involved, at no additional cost.

3.27 TESTS

After the installation is completed, and at such time as the Contracting Officer may direct, the Contractor shall conduct an operating test for approval. The equipment shall be demonstrated to operate in accordance with the requirements of this specification. The test shall be performed in the presence of the Contracting Officer. The Contractor shall furnish all instruments and personnel required for the tests, and the Contracting Officer will furnish the necessary electric power. No part of the electrical distribution system shall be energized prior to the resistance testing of that systems ground rods and submission of test results to the Contracting Officer. Test reports shall indicate the location of the rod and the resistance and the soil conditions at the time the test was performed.

3.28 SPARE PARTS

At least one set of spare fuses shall be furnished-one minimum of each type and size. Lamps shall be furnished equivalent to 2 percent of the total installed, but not less than one of each size and type.

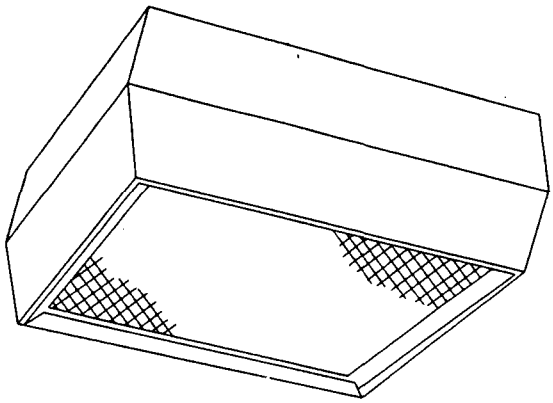

TYPE 304

Enclosed, Surface Mounted, Square, Integrally Ballasted,
High Intensity Discharge Fixture

First Suffix	Second Suffix	Description
		Rated for:
A		175 watt metal halide lamp
B		150 watt high pressure sodium lamp
	1	Type 300 emergency quartz standby

Fixture shall conform to UL 1572. The housing shall be constructed of die-formed, cold-rolled steel and include a fixed upper section and a hinged bottom section which shall be equipped with spring-loaded latches. The upper section shall enclose: the ballast, any capacitors and ignitor required; a glazed porcelain, mogul-base lampholder; lamp; and the lamp reflector. The reflector shall be constructed of aluminum with the manufacturer's standard finish suitable for the type and rating of the lamp. The bottom section shall include a diffuser or lens framing that encloses a flat tempered prismatic glass lens. The lens framing shall be constructed of extruded aluminum with a natural anodized finish sealed with a clear acrylic lacquer protective coating. Gaskets shall be provided as required to prevent light leakage around the lens and the hinged lens framing. Lens framing shall have a nominal 2- foot by 2-foot measurement. The depth of the upper and lower sections of the fixture housing shall not exceed 14 inches. The fixture may have vertical rather than the sloped sides indicated above.

Fixture type indicated on this sheet shall also conform to requirements specified and indicated in the contract documents.

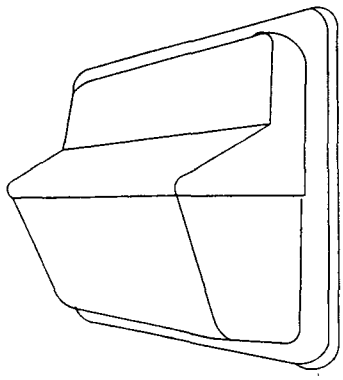

TYPE 501

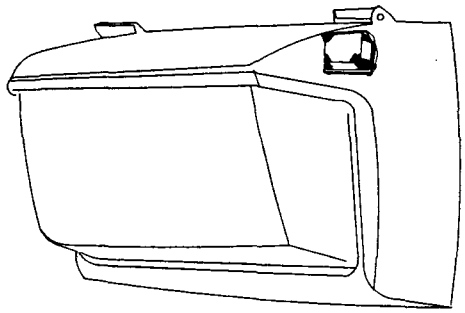

TYPE 502

High Intensity Discharge Fixture for Exterior Wall Mounting, Medium Output

Suffix	Description
	Rated for:
A	50 watt high pressure sodium lamp
B	70 watt high pressure sodium lamp
C	100 watt high pressure sodium lamp
D	150 watt high pressure sodium lamp
E	175 watt metal halide lamp

Fixture shall conform to UL 1572 and shall be rated for use in wet locations. The fixture housing, door assembly, and backplate shall be die-cast aluminum. The door assembly shall have integral cast aluminum hinges. The door assembly shall be held securely to the fixture housing with a stainless steel safety strap when the door is in the open position. The door assembly shall be held firmly against a sealing gasket between the fixture door and housing by stainless steel latches or with stainless steel or brass captive screws when the fixture door is closed. The refractor shall be prismatic borosilicate glass or polycarbonate resin. The refractor shall be gasketed and securely held in the door frame, but shall be easily removed for replacement with a common tool. The reflector shall be aluminum with the manufacturer's standard commercial product finish suitable for the type and rating of the lamp. The fixture shall have manufacturers standard protective coating. Cast knockouts shall be provided in the backplate for recessed outlet box mounting. Ballast shall be of the high power factor type. Ballast shall be of the lead-peak autotransformer type metal halide for lamps and the regulating type for high pressure sodium lamps. Ballast shall be capable of starting and operating the lamp at ambient temperatures from minus 20 degrees F to 105 degrees F. The fixture shall be prewired, and shall have a field adjustable, mogul base glazed porcelain lampholder.

Fixture type indicated on this sheet shall also conform to requirements specified and indicated in the contract documents.