Red Line Revisions to NCDH Approved Drawings

MODIFICATIONS TO
AQUA NEW YORK, INC.
WATER TREATMENT FACILITY
SEAMANS NECK ROAD
NASSAU COUNTY, NEW YORK

DRAWING LIST

GENERAL
G-1 COVER SHEET
G-2 LEGEND & ABBREVIATIONS
G-3 LEGEND

CIVIL
C-0 EXISTING & DEMOLITION SITE PLAN
C-1 SITE LAYOUT PLAN
C-2 SITE UTILITY PLAN
C-3 SITE GRADING PLAN
C-4 EROSION & SEDIMENT CONTROL PLAN
C-5 UTILITY PLAN TIE-IN
C-6 SITE DETAILS
C-7 SITE EROSION & SEDIMENT DETAILS
C-8 GRAVITY SEWER PROFILE
C-9 SITE DETAILS
L-1 SITE LANDSCAPE PLAN
L-2 SITE LANDSCAPE DETAILS

ARCHITECTURAL
CP-1 CODE PLAN
A-1 FLOOR PLAN
A-2 ROOF PLAN AND BUILDING ELEVATIONS
A-3 BUILDING SECTIONS
A-4 SCHEDULES AND DETAILS

STRUCTURAL
S-1 FOUNDATION PLAN
S-2 FOUNDATION DETAILS
S-3 FOUNDATION DETAILS
S-4 STRUCTURAL DETAILS
S-5 GEN. NOTES, SCHEDULES & DETAILS

PROCESS & MECHANICAL
PFD-1 PROCESS FLOW DIAGRAM
PID-1 P&ID-EXISTING SYSTEM TIE-IN
PID-2 P&ID
PID-3 P&ID-LPGAC 100/200
PID-4 P&ID-LPGAC 300/400
PID-5 P&ID-LPGAC 500/600
M-1 PROPOSED LPGAC BUILDING EQUIPMENT LAYOUT
M-2 PROPOSED LPGAC PIPING LAYOUT
M-3 BUILDING SECTIONS
M-4 BUILDING SECTIONS
M-5 INSTRUMENT PIPING
M-6 CHEMICAL ROOM DETAILS
M-6.1 CHEMICAL ROOM DETAILS
M-6.2 POLYPHOSPHATE SYSTEM DETAILS
M-6.3 POLYPHOSPHATE SYSTEM DETAILS
M-7 BACKWASH SUMP AIR-BREAK DETAILS
M-8 PRODUCTION WELL DETAILS

ELECTRICAL
E-1 LEGEND & GENERAL NOTES
E-2 SINGLE LINE DIAGRAM – SHEET 1
E-3 SINGLE LINE DIAGRAM – SHEET 2
E-4 ELEMENTARY DIAGRAMS – SHEET 1
E-5 ELEMENTARY DIAGRAMS – SHEET 2
E-6 ELEMENTARY DIAGRAMS – SHEET 3
E-7 POWER & CONTROL CONDUIT PLAN
E-8 SITE CONDUIT PLAN
E-9 CONDUIT DETAILS & SECTIONS
E-10 CONDUIT TEMPLATES
E-11 PANEL RISER DIAGRAMS
E-12 ELECTRICAL LIGHTING & MISC. PLAN
E-13 LIGHTING SCHEDULE & DETAILS
E-14 GROUNDING PLAN
E-15 GROUNDING NOTES & DETAILS
E-16 MCP-LPGAC ELEMENTARY DIAGRAM – SHT. 1
E-17 MCP-LPGAC ELEMENTARY DIAGRAM – SHT. 2
E-18 TJB-LPGAC BLOCK DIAGRAM & B.O.M.
E-19 INSTRUMENTS & MISC. POWER
E-20 CS-800 ELEMENTARY DIAGRAM

PLUMBING
P-1 UNDERSLAB FLOOR PLAN
P-2 FLOOR PLAN *
P-3 DETAILS

FIRE PROTECTION AND EQUIPMENT
FA-1 FIRE ALARM / SECURITY EQUIPMENT
FX-1 FIRE SUPPRESSION

HVAC
H-1 HVAC & PIPING – NATURAL GAS PLAN
H-2 HVAC & PIPING – NATURAL GAS SECTIONS

* – SEE RPZ DRAWINGS FOR ADDITIONAL DETAIL AND NOTES

RPZ (UNDER SEPARATE COVER)
RPZ-1 REDUCED PRESSURE ZONE – SITE PLAN
RPZ-2 REDUCED PRESSURE ZONE – FLOOR PLAN
RPZ-3 REDUCED PRESSURE ZONE – DETAILS

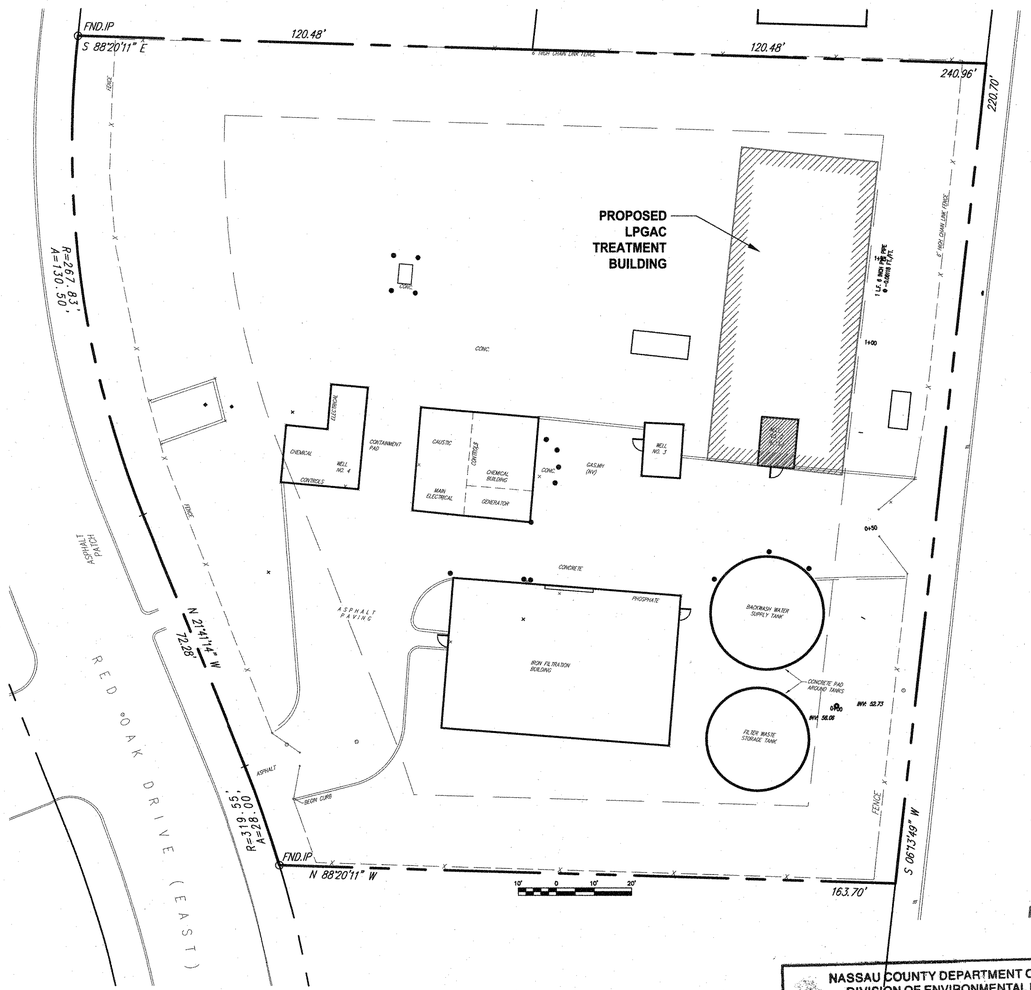

PROPERTY PLAN - 1"=20'

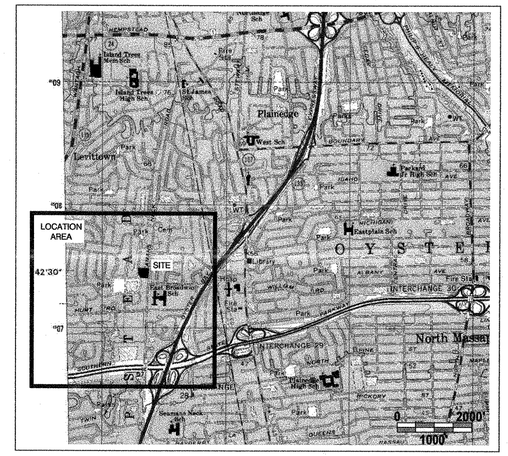

GENERAL VICINITY MAP - 1"=2000'
SOURCE: USGS - AMITYVILLE, NY - 7.5 MINUTE QUADRANGLE - 1994

SITE DATA:

1. PREPARED FOR: UNITED STATES NAVY
2. OWNER: AQUA AMERICA – NEW YORK
3. PROPERTY ADDRESS: 670 SEAMANS NECK ROAD, LEVITTOWN, N.Y. 11783, TOWN OF HEMPSTEAD, NASSAU COUNTY, NEW YORK
4. TAX PARCEL NUMBER: BLOCK 403, SECTION 51, LOT 27 (FORMERLY LOT 8. SUBDIVIDED INTO LOTS 25 & 27. LOT 25 WAS TAKEN FOR ROAD WIDENING)
5. SCHOOL DISTRICT: LEVITTOWN SCHOOL DISTRICT
6. SOURCE OF TITLE: DEED BOOK 4725, PAGES 33–36
7. PARCEL AREA: 1.0705± ACRES (CALCULATED PER DEED)
8. ZONING: LEVITTOWN PLANNED RESIDENCE DISTRICT (LPRD).
9. SETBACKS: FRONT YARD: AVERAGE FRONT YARD DEPTH; SIDE YARD: 20 FEET (OTHER THAN SINGLE FAMILY RESIDENCE); REAR YARD: 25 FEET
10. TOPOGRAPHY: TOPOGRAPHY IS BASED ON A FIELD SURVEY PERFORMED BY TETRA TECH ON SEPTEMBER 26–27, 2009, AN.
11. DATUM: HORIZONTAL=DEED, VERTICAL=NASSAU COUNTY SANITARY SEWER. BENCHMARK: SANITARY MANHOLE AT RED OAK DRIVE, RIM = 55.36. PROJECT BENCHMARK F.H.#3041 TOP NUT = 58.46.
12. BOUNDARY: BOUNDARY LINES SHOWN HEREIN ARE BASED ON A FIELD SURVEY CONDUCTED ON MARCH 17, 2011, PHYSICAL FIELD EVIDENCE, AERIAL PHOTOGRAPHS, RECORD DEED 4725, PAGE 33, AND AVAILABLE PLANS AND WAS BEST FIT TO THE EXISTING CONDITIONS.
13. SANITARY SEWER: NASSAU COUNTY SEWAGE DISPOSAL DISTRICT NO. 3.
14. UTILITIES: UTILITIES ARE SHOWN ACCORDING TO FIELD SURVEYED FOUND SURFACE EVIDENCE AND BEST AVAILABLE PLANS. ALL UTILITIES ARE APPROXIMATE AND MUST BE VERIFIED PRIOR TO COMMENCING EXCAVATION OPERATIONS.
15. FEMA: THIS SITE IN LOCATED ON THE FEMA FIRM PANEL 36059C0253-G. THE PANEL IS LISTED AS "PANEL NOT PRINTED – NO SPECIAL FLOOD HAZARD AREAS" ON FEMA FIRM INDEX MAP NUMBER 36059CIND1-B.
16. REFERENCE PLANS: "MAP SHOWING REAL PROPERTY TO BE ACQUIRED FOR THE ALTERATION OF ALIGNMENT OF SEAMANS NECK ROAD", SHEET 5 OF 9, PREPARED BY BRUIN & KING, DATED AUGUST 1962.

REC'D NOV 07 2012

NASSAU COUNTY DEPARTMENT OF HEALTH
DIVISION OF ENVIRONMENTAL HEALTH
UNIONDALE, N.Y. DECEMBER 20 2012
THESE PLANS FOR INSTALLATION OF GAC FILTERS/BLDG.
AT NY AMERICAN WATER, SEAMAN'S NECK Rd. WATER PLANT
ARE HEREBY APPROVED SUBJECT TO THE PROVISIONS OF THE PERMIT ISSUED THIS DAY
Mordecai Alarcon P.E.
LOCAL PUBLIC HEALTH ENGINEER
SHEET 1 OF 69 PLAN No. 3425-11

CERTIFICATION REQUIRED
TO NASSAU COUNTY DEPARTMENT OF HEALTH BY PROFESSIONAL ENGINEER

UNAUTHORIZED ALTERATION OR ADDITION TO THIS PLAN IS A VIOLATION OF SECTION 7209 OF THE NEW YORK STATE EDUCATION LAW, UNLESS THE PERSON IS ACTING UNDER THE DIRECTION OF A LICENSED PROFESSIONAL ENGINEER. ANY PLAN ALTERATIONS BY ANOTHER ENGINEER MUST BE MARKED AS SUCH, INCLUDING THE SIGNATURE AND SEAL OF THE ALTERING ENGINEER.

CAUTION: IF SHEET IS LESS THAN 34"x22" USE GRAPHIC SCALE

2		11/2/12	FINAL APPROVAL SUBMISSION, REV 2
1			
	MKS	STM	DESCRIPTION

NAVFAC

DES HKM DR SNL
REVIEWED BY HKM
PM/DM
CHIEF ENG/ARCH HKM

DEPARTMENT OF THE NAVY
NAVAL FACILITIES ENGINEERING COMMAND
NORTHEAST IPT
AQUA NY
NAVAL FACILITIES ENGINEERING COMMAND ~ MID-ATLANTIC
NAVAL STATION – NORFOLK, VIRGINIA
NASSAU COUNTY, NEW YORK
MODIFICATIONS TO WATER TREATMENT FACILITY
COVER SHEET

CODE ID. NO. 80091 SIZE D
SCALE: SEE INSET
MAXIMO NO. N62470-08-D-1001
JOB ORDER NO. WE-25
SPEC. NO.
CONSTR. CONTR. NO. 112G02223
NAVFAC DRAWING NO.
SHEET OF --
G-1

MECHANICAL LEGEND

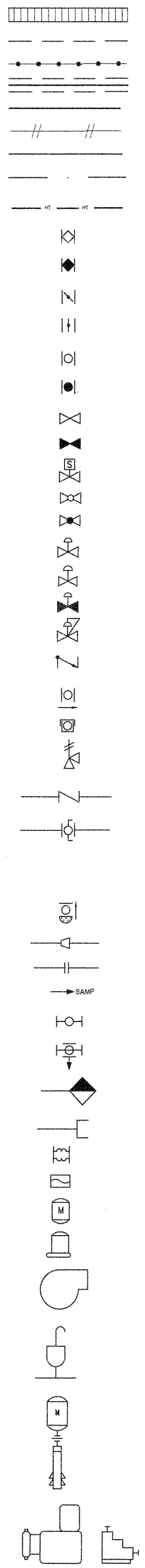

- TRENCH DRAIN
- INSTRUMENT SIGNAL LINE
- ELECTRICAL WIRING
- DOUBLE CONTAINMENT PROCESS LINE
- PROCESS LINE
- COMPRESSED AIR LINE
- VENDOR PACKAGE
- VENDOR/TYPICAL DETAIL
- HEAT TRACING
- PLUG VALVE NORMALLY OPEN
- PLUG VALVE NORMALLY CLOSED
- BUTTERFLY VALVE NORMALLY CLOSED
- BUTTERFLY VALVE NORMALLY OPEN
- BALL VALVE NORMALLY OPEN
- BALL VALVE NORMALLY CLOSED
- GATE VALVE (NORMALLY OPEN)
- GATE VALVE (NORMALLY CLOSED)
- SOLENOID VALVE
- GLOBE VALVE (NORMALLY OPEN)
- GLOBE VALVE (NORMALLY CLOSED)
- AUTOMATIC CONTROL VALVE NORMALLY OPEN
- GATE VALVE WITH AIR OPERATED ACTUATOR
- AUTOMATIC CONTROL VALVE NORMALLY CLOSED
- PRESSURE REGULATOR, HAND ADJUST
- SWING CHECK VALVE
- INLINE BALL CHECK VALVE
- PRESSURE RELEASE VALVE
- PRESSURE RELIEF VALVE
- PRESSURE RELIEF VALVE
- DRILLED BALL VALVE (HOLE DIAMETER SHALL BE 1/8" INSTALLED SO THAT THE HOLE FACES UPSTREAM WHEN THE VALVE IS CLOSED)
- FOOT VALVE
- CONCENTRIC REDUCER
- FLANGE OR COUPLING
- SAMPLE PORT
- TEE OUTLET UP
- TEE OUTLET DOWN WITH DRAIN
- MATERIAL CHANGE / UNDERGROUND PIPELINE
- QUICK DISCONNECT / FLUSH CONNECTION
- FLEXIBLE CONNECTION
- CHEMICAL ISOLATOR
- MOTOR
- SUBMERSIBLE SUMP PUMP
- CENTRIFUGAL PUMP
- AIR/VACUUM RELEASE
- SUBMERSIBLE WELL PUMP
- METERING PUMP

NOTE: ALL VALVE BODIES ARE LINE SIZE UNLESS OTHERWISE MENTIONED

PIPING COLOR CODE:
RECOMMENDED STANDARDS FOR WATER WORKS (2007 EDITION):

WATER LINES	
RAW	OLIVE GREEN
SETTLED OR CLARIFIED	AQUA
FINISHED OR POTABLE	DARK BLUE
CHEMICAL LINES	
ALUM OR PRIMARY COAGULANT	ORANGE
AMMONIA	WHITE
CARBON SLURRY	BLACK
CAUSTIC	YELLOW WITH GREEN BAND
CHLORINE (GAS AND SOLUTION)	YELLOW
CHLORINE DIOXIDE	YELLOW WITH VIOLET BAND
FLUORIDE	LIGHT BLUE WITH RED BAND
LIME SLURRY	LIGHT GREEN
OZONE	YELLOW WITH ORANGE BAND
PHOSPHATE COMPOUNDS	LIGHT GREEN WITH RED BAND
POLYMERS OR COAGULANT AIDS	ORANGE WITH GREEN BAND
POTASSIUM PERMANGANATE	VIOLET
SODA ASH	LIGHT GREEN WITH ORANGE BAND
SULFURIC ACID	YELLOW WITH RED BAND
SULFUR DIOXIDE	LIGHT GREEN WITH YELLOW BAND
WASTE LINES	
BACKWASH WASTE	LIGHT BROWN
SLUDGE	DARK BROWN
SEWER (SANITARY OR OTHER)	DARK GRAY
OTHER	
COMPRESSED AIR	DARK GREEN
GAS	RED
OTHER LINES	LIGHT GRAY

FOR LIQUIDS OR GASES NOT LISTED ABOVE, A UNIQUE COLOR SCHEME AND LABELING SHOULD BE USED. IN SITUATIONS WHERE TWO COLORS DO NOT HAVE SUFFICIENT CONTRAST TO EASILY DIFFERENTIATE BETWEEN THEM, A SIX-INCH BAND OF CONTRASTING COLOR SHOULD BE ON ONE OF THE PIPES AT APPROXIMATELY 30 INCH INTERVALS. THE NAME OF THE LIQUID OR GAS SHOULD ALSO BE ON THE PIPE. IN SOME CASES IT MAY BE ADVANTAGEOUS TO PROVIDE ARROWS INDICATING THE DIRECTION OF FLOW.

PIPE LINE DESIGNATIONS

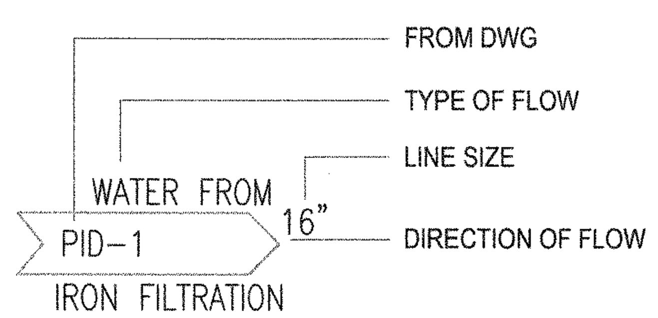

EQUIPMENT NUMBERING

ME-XXX	MECHANICAL EQUIPMENT
P-XXX	PUMP
T-XXX	TANK

UNAUTHORIZED ALTERATION OR ADDITION TO THIS PLAN IS A VIOLATION OF SECTION 7209 OF THE NEW YORK STATE EDUCATION LAW, UNLESS THE PERSON IS ACTING UNDER THE DIRECTION OF A LICENSED PROFESSIONAL ENGINEER. ANY PLAN ALTERATIONS BY ANOTHER ENGINEER MUST BE MARKED AS SUCH, INCLUDING THE SIGNATURE AND SEAL OF THE ALTERING ENGINEER.

ABBREVIATIONS

A

A	AIR
AASHTO	AMERICAN ASSOCIATION OF STATE HIGHWAY AND TRANSPORTATION OFFICIALS
AC	ALTERNATING CURRENT
ACT	ACTIVATED
ACI	AMERICAN CONCRETE INSTITUTE
ACV	ALARM CHECK VALVE
AFF	ABOVE FINISH FLOOR
A/G	ABOVE GROUND
AISC	AMERICAN INSTITUTE OF STEEL CONSTRUCTION
AL	ALUMINUM
ALT	ALTERNATE
AMP	AMPERE
ANSI	AMERICAN NATIONAL STANDARDS INSTITUTE
API	AMERICAN PETROLEUM INSTITUTE
APPROX.	APPROXIMATE
ARV	AUTOMATIC AIR RELEASE VALVE
ASTM	AMERICAN SOCIETY FOR TESTING AND MATERIALS
ATM	ATMOSPHERE
@	AT
AWG	AMERICAN WIRE GAUGE
AWWA	AMERICAN WATER WORKS ASSOCIATION
AVAIL	AVAILABLE

B

BCCMP	BITUMINOUS COATED CORRUGATED METAL PIPE
BLDG	BUILDING
BP	BOTTOM OF PIPE
BS	BLACK STEEL
BTU	BRITISH THERMAL UNIT

C

CB	CIRCUIT BREAKER OR CORE BLOW AIR
CBN	CARBON
CC or C to C	CENTER TO CENTER
CCB	CONTROL CIRCUIT BREAKER
CFM	CUBIC FEET PER MINUTE
CHNG	CHANGE
CIP	CAST IRON PIPE
℄ or CL	CENTER LINE
CMP	CORRUGATED METAL PIPE
CMU	CONCRETE MASONRY UNITS
CO.	COMPANY OR CLEANOUT
COL	COLUMN
COORD	COORDINATE
CONC.	CONCRETE
CONN	CONNECTION
CONT	CONTROL
CR	CONTROL RELAY
CS	CARBON STEEL
CU	COPPER
CU FT	CUBIC FEET

D

D	DEEP OR DISCONNECT
DA	DRAINAGE AREA
DBA	DECIBEL SCALE A
DBC	DIRECT BURIED COMMUNICATIONS LINE
DBL	DOUBLE
DCW	DOMESTIC COLD WATER
DET	DETAIL
DHW	DOMESTIC HOT WATER
DI	DUCTILE IRON
DIA or ø	DIAMETER
DIM	DIMENSION
DIP	DUCTILE IRON PIPE
DR	DRIVE
DWG	DRAWING

E

EA	EACH
EFL	EFFLUENT
EL	ELECTRIC LIGHT
ELEC.	ELECTRIC or ELECTRICAL
ELEV or EL	ELEVATION
EP	EXPLOSION PROOF
EQ.	EQUAL
EQL	EQUALLY
EQUIP	EQUIPMENT
EXH	EXHAUST
EXIST.	EXISTING
EXT	EXTERIOR
EW	EACH WAY OR EXTRACTION WELL

F

F	FAHRENHEIT
FE	FIRE EXTINGUISHER
FE	FLOW ELEMENT
FF	FINISHED FLOOR
FI	FLOW INDICATOR
FIN	FINISHED
FIX.	FIXTURE
FL or FLR	FLOOR OR FILTRATE
FLA	FULL LOAD AMPS
FLG	FLANGE
FP	FREE PRODUCT
FRP/L	FIBERGLASS REINFORCED PLASTIC/LINED
FPM	FEET PER MINUTE
FR	FLOW RECORDER
FRP	FIBERGLASS REINFORCED PLASTIC
FRP/U	FIBERGLASS REINFORCED PLASTIC/UNLINED
FS	FLOW SWITCH
FSL	FLOW SWITCH LOW
FST	FIRE SIGNAL TRANSMITTER
FT	FLOW TRANSMITTER
FTG.	FOOTING

G

G	GAS or GROUND
GAL	GALLON
GALV	GALVANIZED
GEN	GENERAL
GND or GRND	GROUND
GPM	GALLONS PER MINUTE
GR	GRADE
GV	GATE VALVE
GWT	GROUNDWATER TRENCH
GWTP	GROUNDWATER TREATMENT PLANT
GWW	GROUNDWATER WELL

H

H	HIGH or HEATER
HB	HOSE BIBB
HDPE	HIGH DENSITY POLYETHYLENE
HOA	HAND OFF AUTO SWITCH
HORIZ	HORIZONTAL
HP	HORSEPOWER OR HYDROGEN PEROXIDE
HPS	HIGH PRESSURE SODIUM LIGHT
HR	HOUR
HS	HAND SWITCH
HT	HEIGHT or HEAT TRACE
HTG	HEATING
HTR	HEATER
HW	HOT WATER HEATER
Hz	HERTZ

I

I or EF	IRON
IA	INSTRUMENT AIR
I.D.	INSIDE DIAMETER
IMFO	INTEGRALLY MOLDED FLANGED OUTLET
IN	INCH
INT.	INTERIOR

J

JB	JUNCTION BOX

K

KVA	KILOVOLT AMPERES
KW	KILOWATT

L

L	LONG
LAH	LEVEL ALARM HIGH
LAHH	LEVEL ALARM HIGH HIGH
LAL	LEVEL ALARM LOW
LALL	LEVEL ALARM LOW LOW
LBS	POUNDS
LC	LEVEL CONTROLLER
LDMH	LEAK DETECTION MANHOLE
LDR	LEAK DETECTION RISER
LE	LEVEL ELEMENT
L.F.	LINEAR FEET
LS	LEVEL SWITCH
LSH	LEVEL SWITCH HIGH
LSHH	LEVEL SWITCH HIGH HIGH
LSL	LEVEL SWITCH LOW
LSLL	LEVEL SWITCH LOW LOW
LT	LIGHT OR LEFT
LTG	LIGHTING

M

MA	MILLIAMPERE
MATL	MATERIAL
MAX	MAXIMUM
MCB	MAIN CIRCUIT BREAKER
MCC	MOTOR CONTROL CENTER
MCR	MASTER CONTROL RELAY
ME	MECHANICAL EQUIPMENT
MECH	MECHANICAL
MFGR	MANUFACTURER
MFR	MANUFACTURE
MH	MANHOLE or METAL HALIDE LIGHT
MIN	MINIMUM
MISC	MISCELLANEOUS
MOT or M	MOTOR

N

N	NORTH
ND	NON-SANITARY DRAIN
NEC	NATIONAL ELECTRICAL CODE
NEMA	NATIONAL ELECTRICAL MANUFACTURERS ASSOCIATION
NFPA	NATIONAL FIRE PROTECTION ASSOCIATION
NO or #	NUMBER
NPT	NATIONAL PIPE THREAD
NTS	NOT TO SCALE

O

OA	OPERATING ALARM
O.D.	OUTSIDE DIAMETER
OHC	OVERHEAD COMMUNICATIONS LINE
OHE	OVERHEAD ELECTRIC LINE
OL	OVERLOAD OR OPERATING LIGHT
OSHA	OCCUPATIONAL SAFETY & HEALTH ADMINISTRATION
OVFL	OVERFLOW

P

PA	PROCESS AIR
PB	PULL BOX or PUSH BUTTON
PE	POLYETHYLENE
PF	PROCESS FLOW
PH or ø	PHASE
PI	POINT OF INTERSECTION
PL or P L	PLATE
PLC	PROGRAMMABLE LOGIC CONTROLLER
P.O.L.	PETROLEUM, OILS AND LUBRICANTS
POT	POINT OF TANGENCY
PR	POLYMER
PSI	POUNDS PER SQUARE INCH
PT	POINT
PVC	POLYVINYL-CHLORIDE
PVMT.	PAVEMENT
#	POUND

R

RAD or R	RADIUS
RCP	REINFORCED CONCRETE PIPE
REF	REFERENCE
REQD	REQUIRED
REINF	REINFORCEMENT
RPM	REVOLUTIONS PER MINUTE
RT	RIGHT

S

SPD	SPACED
SA	SULFURIC ACID
SC	SPEED CONTROLLER
SH	SODIUM HYDROXIDE
SL	SLUDGE
SPEC	SPECIFICATIONS
SQ or □	SQUARE
S/S	START/STOP
SS	SELECTOR SWITCH OR STAINLESS STEEL
SST	STAINLESS STEEL TUBING
STA	STATION
STD	STANDARD
STL	STEEL
STOR	STORAGE
SURF.	SURFACE
SW	SWITCH

T

T	TANK
TAL	TEMPERATURE ALARM LOW
T'STAT	THERMOSTAT
TC	TEMPERATURE CONTROLLER
TDH	TOTAL DYNAMIC HEAD
TE	TEMPERATURE ELEMENT
TEF	TEFLON
THD	THREADED
THK	THICK
TI	TEMPERATURE INDICATOR
TOA	TIME OPERATION ACTIVATOR
TOC	TOP OF CONCRETE ELEV.
TPE	TO PLANT EFFLUENT
TR	TEMPERATURE RECORDER
TS	THERMAL SWITCH
TSH	TEMPERATURE SWITCH HIGH
TYP	TYPICAL

U

U/G	UNDERGROUND
UL	UNDERWRITERS LABORATORIES
U.S.	UNITED STATES
U.W.	UTILITY WATER

V

V	VOLT OR VALVE
VERT	VERTICAL
VT	VENT

W

W	WIDE or WATT
W/	WITH
WP	WEATHERPROOF
WTP	WATER TREATMENT PLANT
WW	WASH WATER
WWF	WELDED WIRE FABRIC
WWTP	WASTEWATER TREATMENT PLANT

X

XFMR	TRANSFORMER
X-ING	CROSSING
XMTR	TRANSMITTER

NASSAU COUNTY DEPARTMENT OF HEALTH
DIVISION OF ENVIRONMENTAL HEALTH
These plans are hereby approved
SHEET 2 OF 69
See first sheet hereof for date and signature

CAUTION: IF SHEET IS LESS THAN 34"x22" USE GRAPHIC SCALE

SYM	DESCRIPTION	DATE	APPR
-	NASSAU COUNTY DEPT. OF HEALTH SUBMITTAL	9/9/2011	-

NAVFAC

STATE OF NEW YORK
DANIEL BRAKA
080336
LICENSED PROFESSIONAL ENGINEER

DES HKM	DR SNL
REVIEWED BY	HKM
PM/DM	DDB
CHIEF ENG/ARCH	HKM

DEPARTMENT OF THE NAVY
NAVAL FACILITIES ENGINEERING COMMAND
NAVAL FACILITIES ENGINEERING COMMAND ~ MID-ATLANTIC
NORTHEAST IPT
NAVAL STATION - NORFOLK, VIRGINIA
AQUA NY
NASSAU COUNTY, NEW YORK
MODIFICATIONS TO WATER TREATMENT FACILITY

LEGEND & ABBREVIATIONS

CODE ID. NO. 80091	SIZE D
SCALE:	NTS
MAXIMO NO. N62470-08-D-1001	AAA
JOB ORDER NO. WE-25	BBB
SPEC. NO.	CCC
CONSTR. CONTR. NO. 112G02223	
NAVFAC DRAWING NO.	
SHEET OF --	

G-2

NOV 07 2012

2

CIVIL LEGEND

NOTE:
THIS LEGEND IS GENERAL.
SYMBOL AND LINE SIZES, COLORS, AND TYPES
MAY VARY BY PLAN.

EXISTING FEATURES

CONTROL

- SURVEY TRAVERSE POINT
- GPS VERT
- GPS HORIZ
- GPS VERT/HORIZ

PROPERTIES AND BUFFERS

- FND.IP — FND.CM: PROPERTY LINE W/ MONUMENTS
- ADJOINING PROPERTY
- RIGHT-OF-WAY
- EASEMENT OR AGREEMENT
- WETLANDS W/ FLAG
- 100-YR OR 500-YR: FLOOD PLAIN

UTILITIES

- W — WV — GV: WATER LINE W/ VALVE & HYDRANT
- G: GAS LINE W/ VALVE
- EM — UE — JB: UNDERGROUND ELECTRIC W/ METER & JUNCTION BOX
- OE — UP#111: ABOVE-GROUND ELECTRIC W/ POLE & GUY
- TB — COMM — SC CATV: COMMUNICATIONS W/ BOX
- 12"CMP — CB: STORM PIPE W/ CULVERT AND INLET
- CO — 6"PVC: SANITARY LINE W/ CLEAN-OUT & MANHOLE

TRAFFIC

- RAILROAD SIGNAL
- TLSP — TB: TRAFFIC LIGHT SUPPORT POLE / TRAFFIC BOX
- STREET SIGN
- GUARD RAIL
- EDGE OF ASPHALT
- EDGE OF CONCRETE
- CURB

IMPROVEMENTS

- BUILDING - MAJOR
- POST
- LAMP POLE OR POST
- SIGNAGE (GENERAL)
- MB: MAIL BOX
- HANDICAP STRIPING
- CHAIN LINK FENCE W/ GATE
- SPLIT RAIL FENCE

GROUND FEATURES

- TREES (GENERAL)
- BUSH
- x 54.2: SPOT ELEVATION
- TREELINE
- 65.0: MAJOR CONTOUR (5')
- INDEX CONTOUR (1')
- DEPRESSION CONTOUR
- GROUND OBSCURED
- FIELD LINE
- BOLLARD
- U/G WATER VALVE

ENVIRONMENTAL AND HYRDOGEOLOGICAL

- BOR-x: SOIL BORING
- OW-x — PZ-x: MONITORING WELL
- RW-x: GROUNDWATER RECOVERY WELL
- EDGE OF EXISTING LANDFILL CAP
- FM: FORCE MAIN W/ CONDUIT
  * AS LABELED FOR INJECTION OR RECOVERY
- EFL: TREATMENT PLANT EFFLUENT

PROPOSED FEATURES

PROPERTIES AND BUFFERS

- S58° 12' 12"E — 1534.66: PROPERTY LINE W/ MONUMENT
- EASEMENT
- PROPERTY SETBACK

UTILITIES

- HYDRANT
- 4" DI: WATER LINE
- 10" DI: FIRE LINE W/ VALVE
- GAS
- UE: UNDERGROUND ELECTRIC
- UE: ABOVEGROUND ELECTRIC
- UE: SITE LIGHTING
- 45 LF 18" RCP, INV3 FT/FT: STORM W/ MANHOLE & FLARED END
- SANITARY SEWER W/ MANHOLE
- RIP-RAP
- STORM INLET
- STORM CLEANOUT

TRAFFIC

- EDGE OF PAVEMENT
- CURB
- EDGE OF WALKWAY
- STRIPING
- HEAVY PAVING AREA
- LIGHT PAVING AREA
- CONCRETE
- GRAVEL

IMPROVEMENTS

- BUILDING OUTLINE
- X: CHAIN LINK FENCE
- SIGN (GENERAL)

GRADING AND GROUND FEATURES

- 65: MAJOR CONTOUR (5')
- 64: INDEX CONTOUR (1')
- 67×20: PROPOSED SPOT GRADE
  - HP: HIGH POINT
  - LP: LOW POINT
  - BC: BOTTOM CURB
  - TC: TOP CURB
- 0.48% — -3:1: DRAINAGE SLOPES
- TREE OR BRUSH LINE

EROSION AND SEDIMENT

- SF: SILT FENCE
- LOD: LOD
- TP: TREE PROTECTION

ENVIRONMENTAL AND HYRDOGEOLOGICAL

- RW-x: NEW OR MODIFIED GROUNDWATER WELL
  - RW: RECOVERY WELL
  - IW: INJECTION WELL
- FM: FORCE MAIN W/ CONDUIT (DUAL CONTAINED AS LABELED)
- 22.5° H.E.: HORIZONTAL ELBOW
- 22.5° V.E.: VERTICAL ELBOW
- INJ: INJECTION FORCE MAIN

SCHEDULE OF STANDARD IDENTIFICATION LETTERS

	FIRST-LETTER		SUCCEEDING-LETTERS		
	MEASURED OR INITIATED VARIABLE	MODIFIER	READOUT OR PASSIVE FUNCTION	OUTPUT FUNCTION	MODIFIER
A	ANALYSIS		ALARM		
B	BURNER, COMBUSTION				
C	USER'S CHOICE			CONTROL	
D	DENSITY	DIFFERENTIAL			
E	VOLTAGE		SENSOR (PRIMARY ELEMENT)		
F	FLOW RATE	RATIO (FRACTION)			
G	USER'S CHOICE		GLASS, VIEWING DEVICE		
H	HAND				HIGH
I	CURRENT (ELECTRICAL)		INDICATE		
J	POWER	SCAN			
K	TIME, TIME SCHEDULE	TIME RATE OF CHANGE		CONTROL STATION	
L	LEVEL		LIGHT		LOW
M	USER'S CHOICE	MOMENTARY			MIDDLE, INTERMEDIATE
N	TORQUE		USER'S CHOICE	USER'S CHOICE	USER'S CHOICE
O	USER'S CHOICE		ORIFICE, RESTRICTION		
P	PRESSURE, VACUUM		POINT (TEST) CONNECTION		
Q	QUANTITY	INTEGRATE, TOTALIZE			
R	RADIATION		RECORD		
S	SPEED, FREQUENCY	SAFETY		SWITCH	
T	TEMPERATURE			TRANSMIT	
U	MULTIVARIABLE		MULTIFUNCTION	MULTIFUNCTION	MULTIFUNCTION
V	VIBRATION, MECH. ANALYSIS			VALVE, DAMPER, LOUVER	
W	WEIGHT, FORCE		WELL		
X	UNCLASSIFIED	X AXIS	UNCLASSIFIED	UNCLASSIFIED	UNCLASSIFIED
Y	EVENT, STATE OR PRESENCE	Y AXIS		RELAY, COMPUTE, CONVERT	
Z	POSITION, DIMENSION	Z AXIS		DRIVER, ACTUATOR, FINAL CONTROL ELEMENT	

NOTES:
1. THESE LEGENDS AND SCHEDULES ARE COMPOSED OF STANDARD INSTRUMENT SOCIETY OF AMERICA (ISA) SYMBOLS AND ARE PERTINENT TO THE CONDITIONS ON THIS SET OF DRAWINGS.
2. ADDITIONAL LEGENDS MAY APPEAR IN THIS SET OF DRAWINGS TO INDICATE SPECIFIC CONDITIONS IN LIEU OF SYMBOLS SHOWN ON THIS SHEET.

GENERAL INSTRUMENT SYMBOLS

	PRIMARY LOCATION NORMALLY ACCESSIBLE	PRIMARY LOCATION NORMALLY INACCESSIBLE	FIELD MOUNTED	AUXILIARY LOCATION NORMALLY ACCESSIBLE	AUXILIARY LOCATION NORMALLY INACCESSIBLE
DISCRETE INSTRUMENTS					
SHARED DISPLAY, SHARED CONTROL					
COMPUTER FUNCTION					
PROGRAMMABLE LOGIC CONTROL					

ADDITIONAL INST. SYMBOLS:

- SINGLE INSTRUMENT OR OTHER COMPONENT HAVING MULTIPLE FUNCTIONS
- VENDOR SUPPLIED EQUIPMENT

REFERENCE SYMBOLS

- INDICATES DIRECTION OF CUTTING PLANE — LETTER INDICATES SECTION DESIGNATION
- SHEET NO. WHERE SECTION IS TAKEN — SHEET NO. WHERE SECTION IS DRAWN

SECTION
- LETTER INDICATES SECTION DESIGNATION
- SHEET NO. WHERE SECTION IS DRAWN
- SHEET NO. WHERE SECTION IS TAKEN

DETAIL
- NUMBER INDICATES DETAIL DESIGNATION
- SHEET NO. WHERE DETAIL IS DRAWN
- SHEET NO. WHERE DETAIL IS TAKEN

COMMON INSTRUMENTATION PER THESE PLANS

- I — CONTROL INTERLOCK
- PI — PRESSURE (VACUUM) GAUGE
- TI — TEMPERATURE GAUGE
- FE XXX — FLOW ELEMENT
- LE — LEVEL ELEMENT
- ΔP — DIFFERENTIAL PRESSURE GAUGE

NASSAU COUNTY DEPARTMENT OF HEALTH
DIVISION OF ENVIRONMENTAL HEALTH
These plans are hereby approved
SHEET 3 OF 69
See first sheet hereof for date and signature

CAUTION: IF SHEET IS LESS THAN 34"x22" USE GRAPHIC SCALE

UNAUTHORIZED ALTERATION OR ADDITION TO THIS PLAN IS A VIOLATION OF SECTION 7209 OF THE NEW YORK STATE EDUCATION LAW, UNLESS THE PERSON IS ACTING UNDER THE DIRECTION OF A LICENSED PROFESSIONAL ENGINEER. ANY PLAN ALTERATIONS BY ANOTHER ENGINEER MUST BE MARKED AS SUCH, INCLUDING THE SIGNATURE AND SEAL OF THE ALTERING ENGINEER.

SYM	DESCRIPTION	DATE	APPR
	NASSAU COUNTY DEPT. OF HEALTH SUBMITTAL	9/11/2011	

NAVFAC

STATE OF NEW YORK — DAVID DANIEL BRAZAS — 080336 — LICENSED PROFESSIONAL ENGINEER

DES	HKM	DR	SNL
REVIEWED BY	HKM		
PM/DM	DDB		
CHIEF ENG/ARCH	HKM		

DEPARTMENT OF THE NAVY
NAVAL FACILITIES ENGINEERING COMMAND ~ MID-ATLANTIC
NORTHEAST IPT
NAVAL FACILITIES ENGINEERING COMMAND
NAVAL STATION - NORFOLK, VIRGINIA

NASSAU COUNTY, NEW YORK
AQUA NY
MODIFICATIONS TO WATER TREATMENT FACILITY

LEGEND

CODE ID. NO. 80091 | SIZE D
SCALE: NTS
MAXIMO NO. N62470-08-D-1001
JOB ORDER NO. WE-25
SPEC. NO.
CONSTR. CONTR. NO. 112G02223
NAVFAC DRAWING NO.
SHEET — OF —

G-3

NOV 07 2012

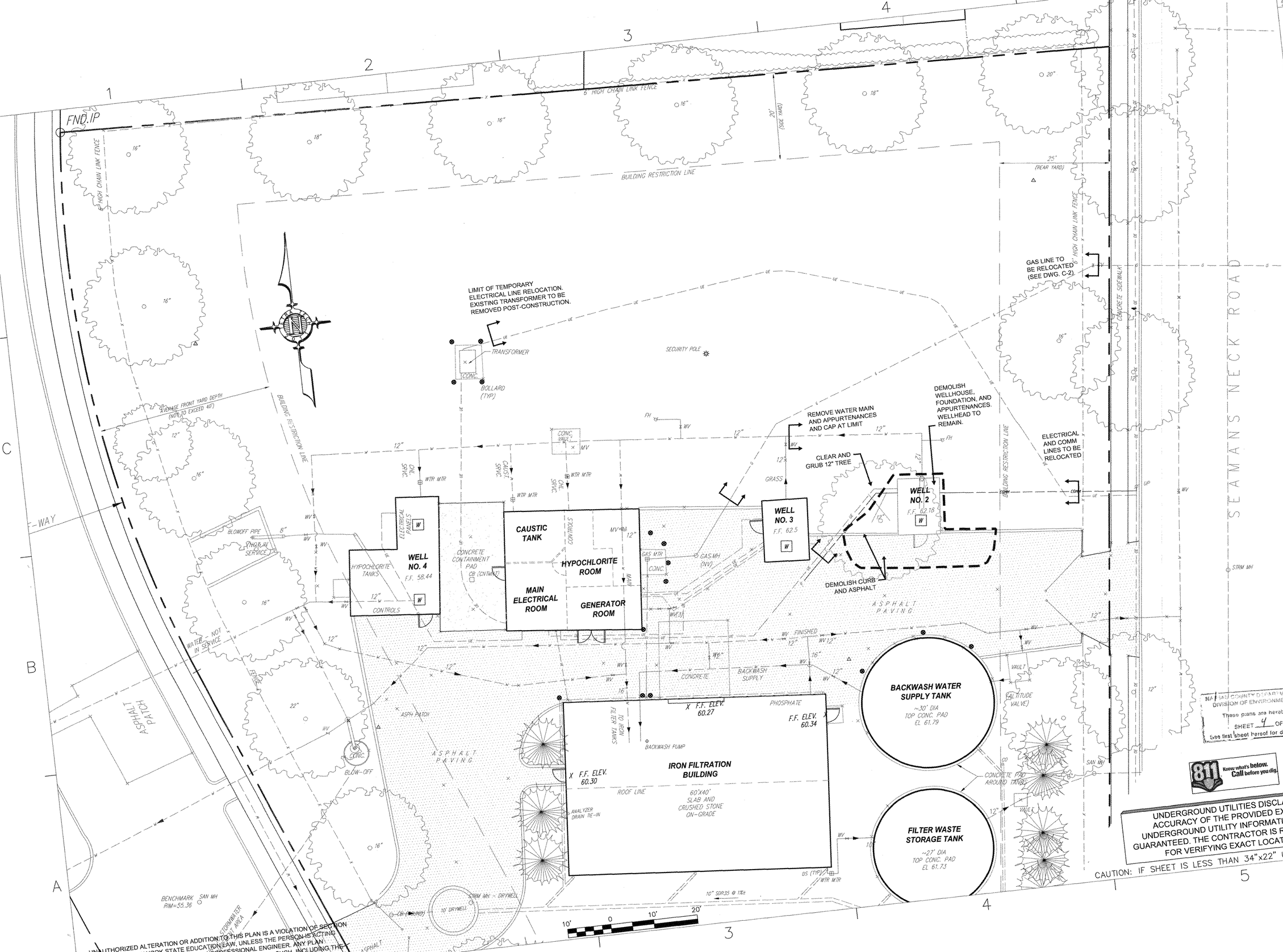
FND.IP
6' HIGH CHAIN LINK FENCE
BUILDING RESTRICTION LINE
20' (SIDE YARD)
25' (REAR YARD)
AVERAGE FRONT YARD DEPTH (NOT TO EXCEED 40')
LIMIT OF TEMPORARY ELECTRICAL LINE RELOCATION. EXISTING TRANSFORMER TO BE REMOVED POST-CONSTRUCTION.
TRANSFORMER
CONC.
BOLLARD (TYP)
SECURITY POLE
GAS LINE TO BE RELOCATED (SEE DWG. C-2)
CONCRETE SIDEWALK
REMOVE WATER MAIN AND APPURTENANCES AND CAP AT LIMIT
DEMOLISH WELLHOUSE, FOUNDATION, AND APPURTENANCES. WELLHEAD TO REMAIN.
ELECTRICAL AND COMM LINES TO BE RELOCATED
CLEAR AND GRUB 12" TREE
GRASS
WELL NO. 2
F.F. 62.18
WELL NO. 3
F.F. 62.5
WELL NO. 4
F.F. 58.44
ELECTRICAL PANELS
HYPOCHLORITE TANKS
CONTROLS
CONCRETE CONTAINMENT PAD
CAUSTIC TANK
HYPOCHLORITE ROOM
MAIN ELECTRICAL ROOM
GENERATOR ROOM
DEMOLISH CURB AND ASPHALT
ASPHALT PAVING
BLOWOFF PIPE
WATER - NOT IN SERVICE
ASPHALT PATCH
BLOW-OFF
BACKWASH WATER SUPPLY TANK
~30' DIA
TOP CONC. PAD
EL 61.79
FILTER WASTE STORAGE TANK
~27' DIA
TOP CONC. PAD
EL 61.73
CONCRETE PAD AROUND TANKS
VAULT
(ALTITUDE VALVE)
IRON FILTRATION BUILDING
60'X40'
SLAB AND CRUSHED STONE ON-GRADE
ROOF LINE
F.F. ELEV. 60.27
F.F. ELEV. 60.34
F.F. ELEV. 60.30
BACKWASH PUMP
BACKWASH SUPPLY
PHOSPHATE
FILTER TANKS
ANALYZER DRAIN TIE-IN
10" SDR35 @ 1%±
BENCHMARK RIM=55.36
SAN MH
STORMWATER AREA
10' DRYWELL
STRM MH - DRYWELL
STEAMANS NECK ROAD
NASSAU COUNTY DEPT. OF HEALTH
These plans are hereby approved
SHEET 4 OF 69
See first sheet hereof for date and signature
Know what's below. Call before you dig.
UNDERGROUND UTILITIES DISCLAIMER: ACCURACY OF THE PROVIDED EXISTING UNDERGROUND UTILITY INFORMATION IS NOT GUARANTEED. THE CONTRACTOR IS RESPONSIBLE FOR VERIFYING EXACT LOCATIONS.
CAUTION: IF SHEET IS LESS THAN 34"x22" USE GRAPHIC SCALE
UNAUTHORIZED ALTERATION OR ADDITION TO THIS PLAN IS A VIOLATION OF SECTION
NASSAU COUNTY DEPT. OF HEALTH SUBMITTAL
NAVFAC
STATE OF NEW YORK
DAVID DANIEL BRAFFA
080336
LICENSED PROFESSIONAL ENGINEER
DES CSG DR SNL
REVIEWED BY HKM
PM/DM DDB
CHIEF ENG/ARCH HKM
DEPARTMENT OF THE NAVY
NAVAL FACILITIES ENGINEERING COMMAND
NORTHEAST PT.
AQUA NY
NAVAL FACILITIES ENGINEERING COMMAND ~ MID-ATLANTIC
NAVAL STATION ~ NORFOLK, VIRGINIA
NASSAU COUNTY, NEW YORK
MODIFICATIONS TO WATER TREATMENT FACILITY
EXISTING & DEMOLITION SITE PLAN
CODE ID. NO. 80091
SIZE D
SCALE: 1"=10'-0"
MAXIMO NO. N62470-08-D-1001
JOB ORDER NO. WE-23
SPEC. NO.
CONSTR. CONTR. NO. 112G02223
NAVFAC DRAWING NO.
SHEET OF
C-0
NOV 07 2011

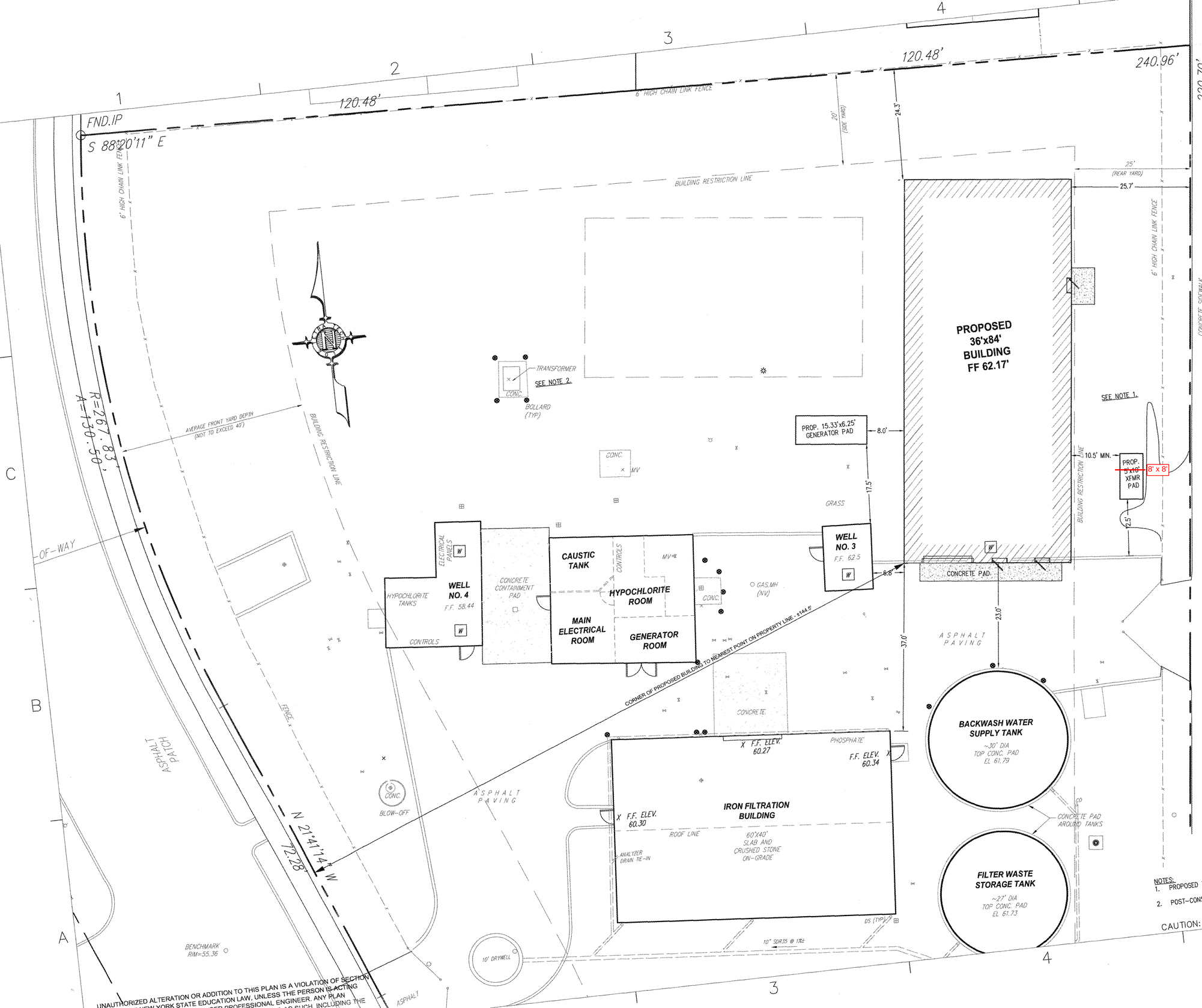

NASSAU COUNTY DEPARTMENT OF HEALTH
DIVISION OF ENVIRONMENTAL HEALTH
These plans are hereby approved
SHEET 5 OF 69
See first sheet hereof for date and signature

NOTES:
1. PROPOSED TRANSFORMER SIZE AND LOCATION TO BE VERIFIED BY LIPA.
2. POST-CONSTRUCTION REMOVAL OF EXISTING TRANSFORMER TO BE COORDINATED WITH LIPA.

CAUTION: IF SHEET IS LESS THAN 34"x22" USE GRAPHIC SCALE

UNAUTHORIZED ALTERATION OR ADDITION TO THIS PLAN IS A VIOLATION OF SECTION ... NEW YORK STATE EDUCATION LAW, UNLESS THE PERSON IS ACTING ... PROFESSIONAL ENGINEER. ANY PLAN ... SUCH, INCLUDING THE

NAVFAC

STATE OF NEW YORK
DAVID DANIEL BRAYACK
080336
LICENSED PROFESSIONAL ENGINEER

DES	CSG	DR	SNL
REVIEWED BY		HKM	
PM/DM		DDB	
CHIEF ENG/ARCH		HKM	

DEPARTMENT OF THE NAVY
NAVAL FACILITIES ENGINEERING COMMAND ~ MID-ATLANTIC
NAVAL STATION - NORFOLK, VIRGINIA
NORTHEAST IPT
NASSAU COUNTY, NEW YORK
AQUA NY
MODIFICATIONS TO WATER TREATMENT FACILITY
SITE LAYOUT PLAN

CODE ID. NO. 80091	SIZE D
SCALE:	1"=10'-0"
MAXIMO NO. N52470-08-D-1001	
JOB ORDER NO. WE-25	
SPEC. NO.	
CONSTR. CONTR. NO.	112G02223
NAVFAC DRAWING NO.	
SHEET	OF --

C-1

NOV 07 2011

NASSAU COUNTY DEPT. OF HEALTH SUBMITTAL
DESCRIPTION
SYM

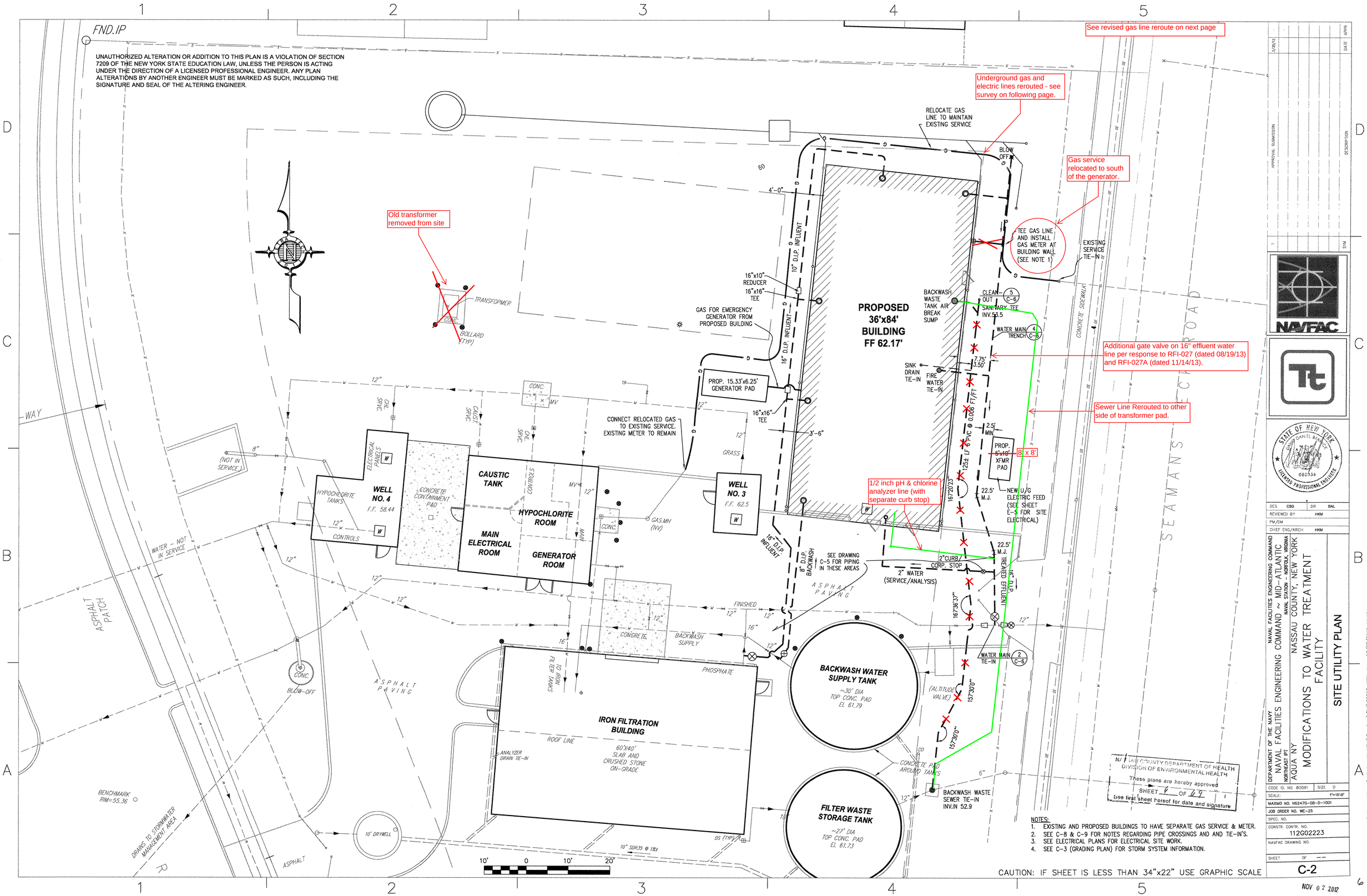

NOTES:
1. EXISTING AND PROPOSED BUILDINGS TO HAVE SEPARATE GAS SERVICE & METER.
2. SEE C-8 & C-9 FOR NOTES REGARDING PIPE CROSSINGS AND AND TIE-IN'S.
3. SEE ELECTRICAL PLANS FOR ELECTRICAL SITE WORK.
4. SEE C-3 (GRADING PLAN) FOR STORM SYSTEM INFORMATION.

CAUTION: IF SHEET IS LESS THAN 34"x22" USE GRAPHIC SCALE

NAVFAC

STATE OF NEW YORK — LICENSED PROFESSIONAL ENGINEER — 080336

DES	CSG
DR	SNL
REVIEWED BY	HKM
PM/DM	
CHIEF ENG/ARCH	HKM

DEPARTMENT OF THE NAVY
NAVAL FACILITIES ENGINEERING COMMAND
NORTHEAST PT
NAVAL FACILITIES ENGINEERING COMMAND ~ MID-ATLANTIC
NAVAL STATION - NORFOLK, VIRGINIA
AQUA NY
NASSAU COUNTY, NEW YORK

MODIFICATIONS TO WATER TREATMENT FACILITY

SITE UTILITY PLAN

CODE ID. NO. 80091 | SIZE D
SCALE: 1"=10'-0"
MAXIMO NO. N62470-08-D-1001
JOB ORDER NO. WE-25
SPEC. NO.
CONSTR. CONTR. NO. 112G02223
NAVFAC DRAWING NO.
SHEET OF --

C-2

NOV 07 2012

K:\112G02223 - Aqua Bethpage-NAvy Project - H. Mital\Drawings\Civil\02223_Utility.dwg 03/27/2012 11:19

Legend

- PROPERTY LINE & CORNER
- UTILITY POLE
- FIRE HYDRANT
- SEWER MANHOLE
- UNDERGROUND GAS MARKER STAKE
- UNDERGROUND ELECTRIC MARKER STAKE
- EXISTING UNDERGROUND ELECTRIC LINE
- PROPOSED UNDERGROUND ELECTRIC LINE
- EXISTING UNDERGROUND GAS LINE
- PROPOSED UNDERGROUND GAS LINE
- PROPOSED NEW BUILDING AS STAKED

Revision to Drawing C-2: The Natural Gas line has been rerouted as shown on this drawing (per Navy's response to RFI-013 dated 2/4/2013.

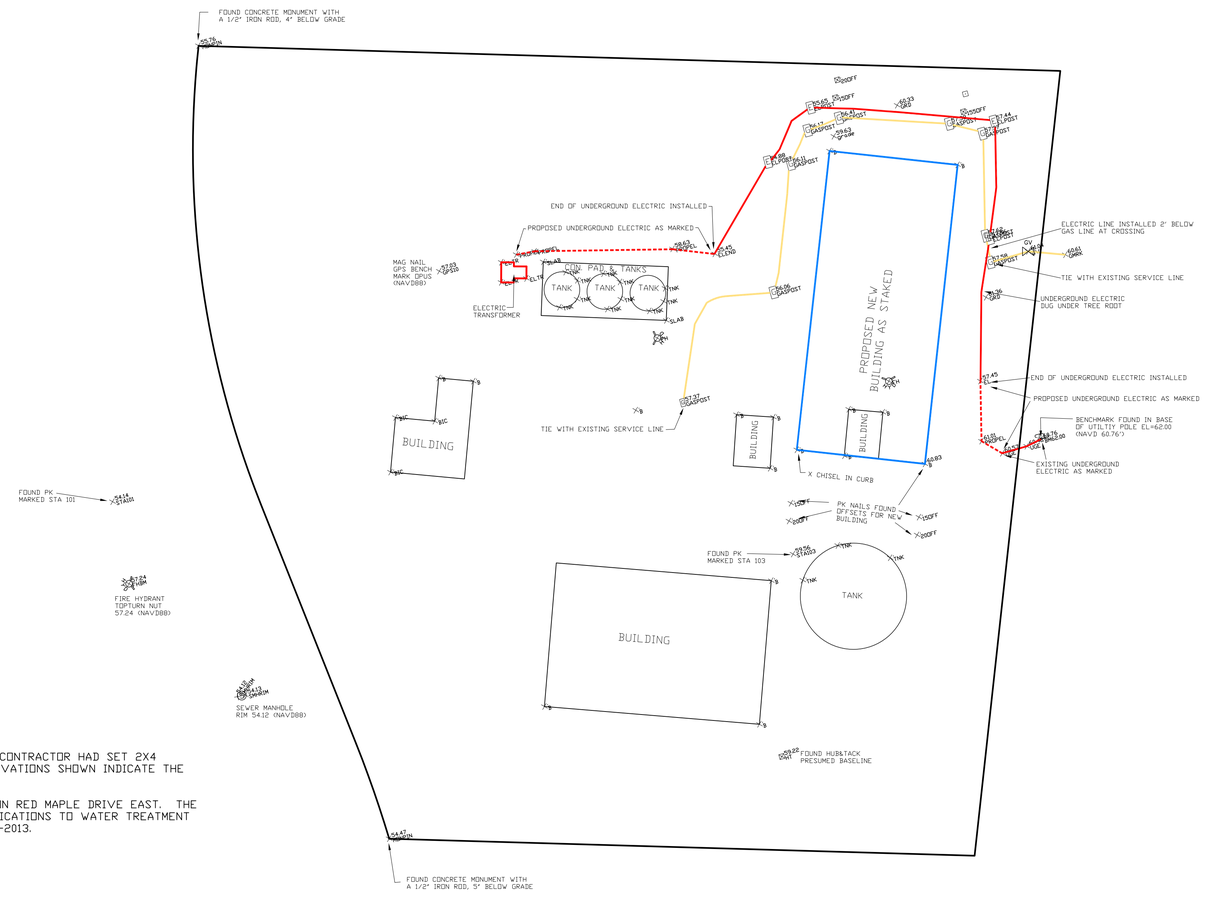

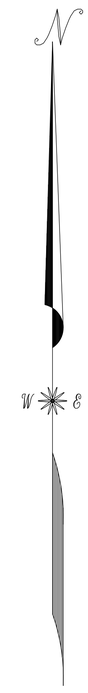

Legend

1.) ALL DETAILS ON THIS MAP WERE FIELD LOCATED ON THURSDAY FEB. 7, 2013.

2.) ELEVATIONS ARE PER NAVD88.

3.) BURIED GAS AND ELECTRIC LINES WERE ALREADY BURIED AT THE TIME OF THIS SURVEY. CONTRACTOR HAD SET 2X4 POSTS 7' LONG ON TOP OF THE LINES AS THEY WERE BACK FILLED. THE LOCATIONS AND ELEVATIONS SHOWN INDICATE THE LINES BETWEEN THE POSTS AND AS INDICATED BY CONTRACTOR.

4.) PROPERTY LINES SHOWN ARE APPROXIMATE. TWO EXISTING MONUMENTS WERE RECOVERED ON RED MAPLE DRIVE EAST. THE BOUNDARY INFORMATION AND SOME OTHER DETAILS ARE DERIVED FROM A MAP ENTITLED "MODIFICATIONS TO WATER TREATMENT FACILITY", PREPARED BY GAYRON de BRUIN, LAND SURVEYING & ENGINEERING, PC, DATED 1-23-2013.

" UNAUTHORIZED ALTERATION OR ADDITION TO A SURVEY MAP BEARING A LICENSED LAND SURVEYOR'S EMBOSSED SEAL IS A VIOLATION OF SECTION 7209, SUB-DIVISION 2, OF THE NEW YORK STATE EDUCATION LAW."
" ONLY COPIES FROM THE ORIGINAL TRACING OF THIS SURVEY MAP MARKED WITH THE LAND SURVEYORS EMBOSSED SEAL SHALL BE CONSIDERED VALID, TRUE COPIES."
"CERTIFICATIONS INDICATED HEREON SIGNIFY THAT THIS SURVEY WAS PREPARED IN ACCORDANCE WITH THE EXISTING CODE OF PRACTICE FOR LAND SURVEYORS ADOPTED BY THE NEW YORK STATE ASSOCIATION OF PROFESSIONAL LAND SURVEYORS. SAID CERTIFICATIONS SHALL RUN ONLY TO THOSE NAMED INDIVIDUALS AND/OR INSTITUTIONS FOR WHOM THE SURVEY WAS PREPARED. CERTIFICATIONS ARE NOT TRANSFERABLE TO ADDITIONAL INDIVIDUALS, INSTITUTIONS, THEIR SUCCESSORS AND/OR ASSIGNS, OR SUBSEQUENT OWNERS."

Green Seal Environmental, Inc.
114 State Road, Building B
Sagamore Beach, MA 02562
Tel: (508) 888-6034
Fax: (508) 888-1506
www.gseenv.com

Asbuilt Survey Map
of Underground Gas & Electric
# of Water Treatment Facility

TAX MAP REFERENCE: SECTION 51, BLOCK 403, LOT 27

Situate in the Town of Hemstead
Nassau County, New York State
Scale 1" = 20' Feb. 11, 2013

MAP BY: WGN	MAP CK:	LOT CK:	PROJECT: 3664	SHEET 1 OF 1

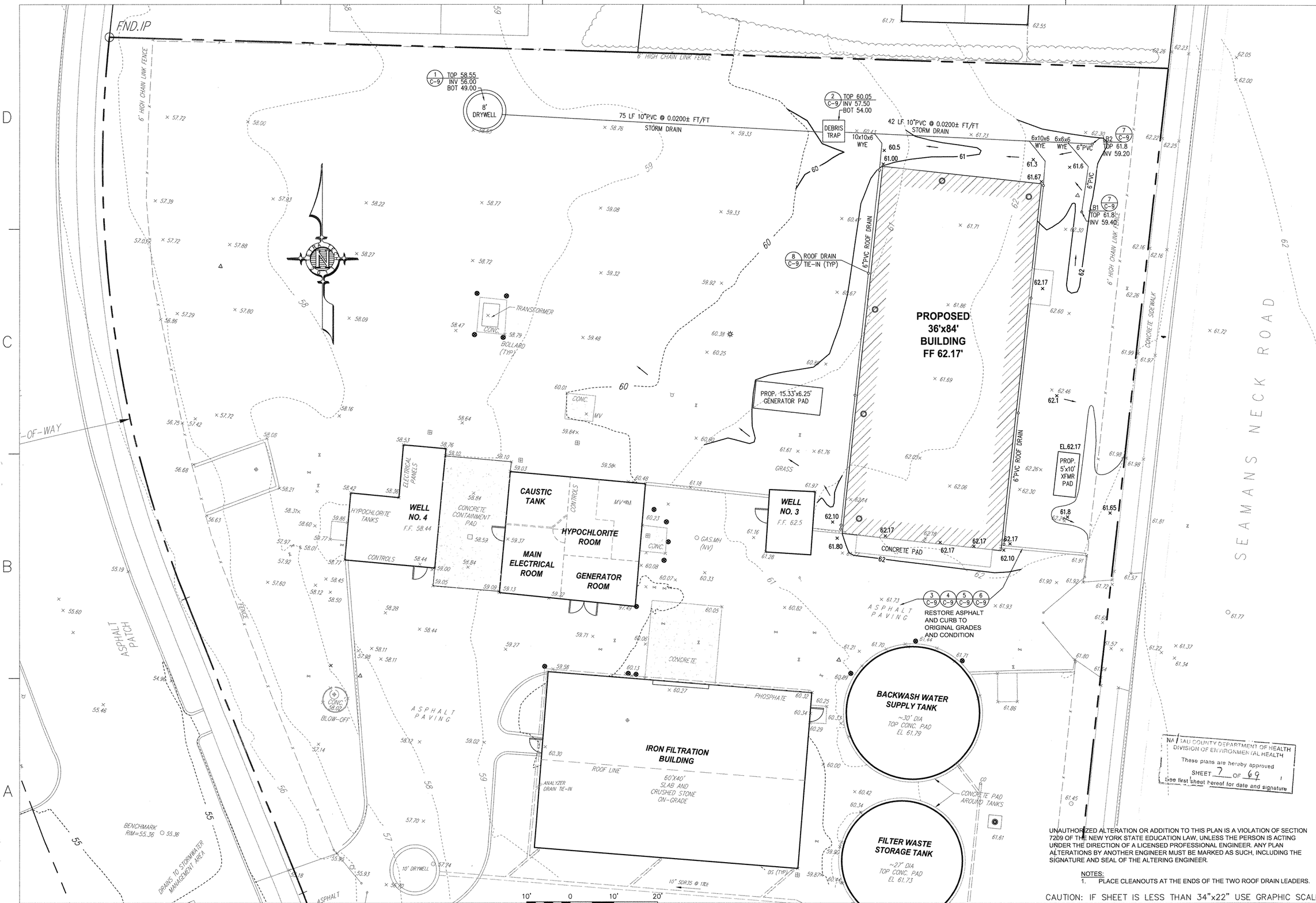

NASSAU COUNTY DEPARTMENT OF HEALTH
DIVISION OF ENVIRONMENTAL HEALTH
These plans are hereby approved
SHEET 7 OF 69
See first sheet hereof for date and signature

UNAUTHORIZED ALTERATION OR ADDITION TO THIS PLAN IS A VIOLATION OF SECTION 7209 OF THE NEW YORK STATE EDUCATION LAW, UNLESS THE PERSON IS ACTING UNDER THE DIRECTION OF A LICENSED PROFESSIONAL ENGINEER. ANY PLAN ALTERATIONS BY ANOTHER ENGINEER MUST BE MARKED AS SUCH, INCLUDING THE SIGNATURE AND SEAL OF THE ALTERING ENGINEER.

NOTES:
1. PLACE CLEANOUTS AT THE ENDS OF THE TWO ROOF DRAIN LEADERS.

CAUTION: IF SHEET IS LESS THAN 34"x22" USE GRAPHIC SCALE

NASSAU COUNTY DEPT. OF HEALTH SUBMITTAL 9/9/2011

SYM	DESCRIPTION	DATE	APPR

NAVFAC

STATE OF NEW YORK
DAVID DANIEL BRAYAUX
080236
LICENSED PROFESSIONAL ENGINEER

DES CSG	DR SNL
REVIEWED BY	HKM
PM/DM	DDB
CHIEF ENG/ARCH	HKM

DEPARTMENT OF THE NAVY
NAVAL FACILITIES ENGINEERING COMMAND
NAVAL FACILITIES ENGINEERING COMMAND ~ MID-ATLANTIC
NORTHEAST IPT
NAVAL STATION - NORFOLK, VIRGINIA

AQUA NY
NASSAU COUNTY, NEW YORK
MODIFICATIONS TO WATER TREATMENT FACILITY

SITE GRADING PLAN

CODE ID. NO. 80091	SIZE D
SCALE:	1"=10'-0"
MAXIMO NO. N62470-08-D-1001	
JOB ORDER NO. WE-25	
SPEC. NO.	
CONSTR. CONTR. NO. 112G02223	
NAVFAC DRAWING NO.	
SHEET	OF --

C-3

K:\112G02223 - Aqua Bethpage-NAvy Project - H. Mital\Drawings\Civil\02223_Grading.dwg 09/07/2011 09:27

NOV 07 2012

7

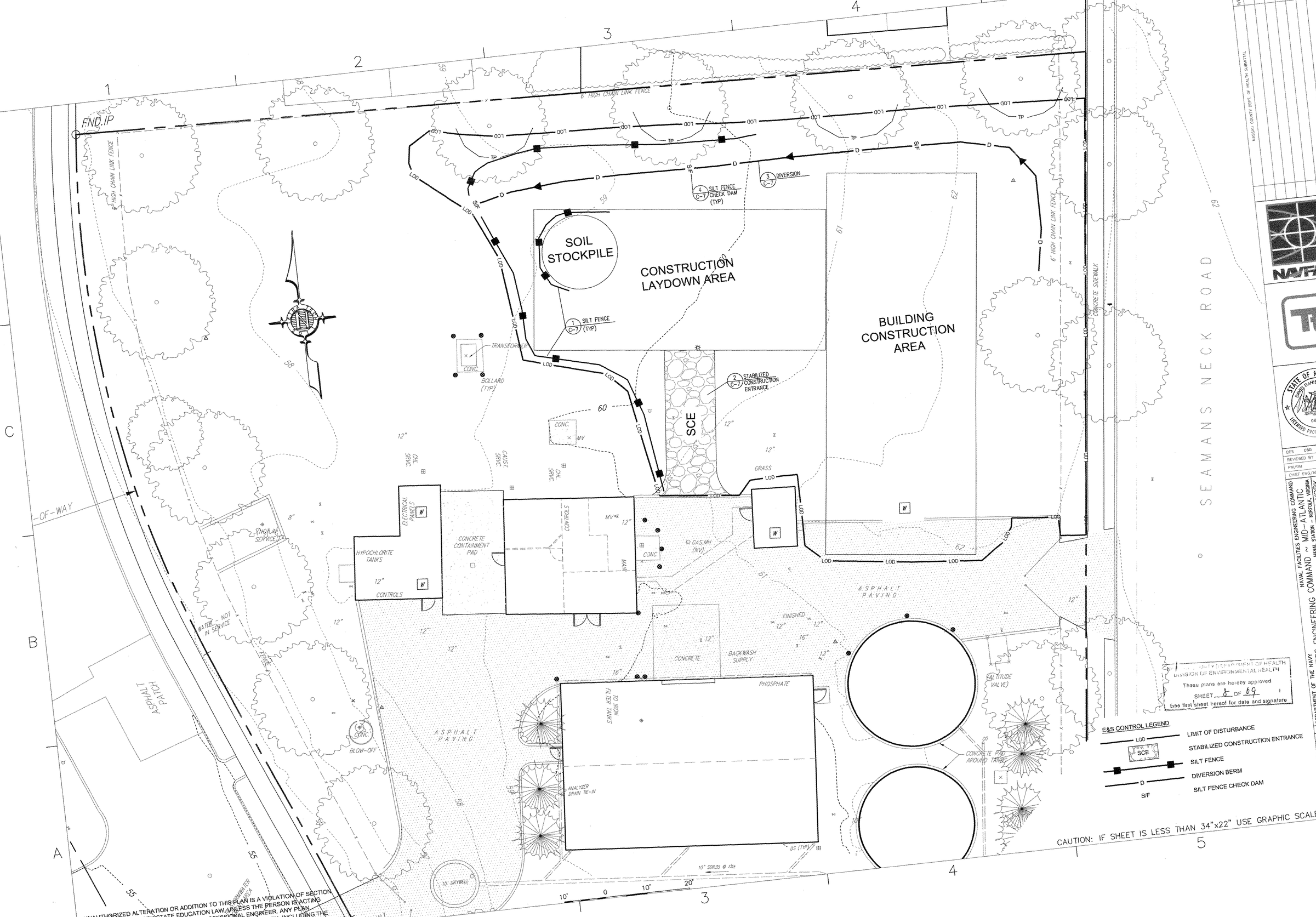

E&S CONTROL LEGEND

LOD	LIMIT OF DISTURBANCE
SCE	STABILIZED CONSTRUCTION ENTRANCE
	SILT FENCE
D	DIVERSION BERM
S/F	SILT FENCE CHECK DAM

CAUTION: IF SHEET IS LESS THAN 34"x22" USE GRAPHIC SCALE

NASSAU COUNTY DEPT. OF HEALTH SUBMITTAL

DESCRIPTION

SYM.

NAVFAC

STATE OF NEW YORK
DAVID DANIEL BRAYACK
080836
LICENSED PROFESSIONAL ENGINEER

DES CSG	DR SNL
REVIEWED BY	HKM
PM/DM	DDB
CHIEF ENG/ARCH	HKM

DEPARTMENT OF THE NAVY
NAVAL FACILITIES ENGINEERING COMMAND
NORTHEAST IPT

NAVAL FACILITIES ENGINEERING COMMAND ~ MID-ATLANTIC
NAVAL STATION - NORFOLK, VIRGINIA

NASSAU COUNTY, NEW YORK

AQUA NY

MODIFICATIONS TO WATER TREATMENT FACILITY

SITE EROSION AND SEDIMENT CONTROL PLAN

CODE ID. NO. 80091 SIZE D
SCALE: 1"=10'-0"
MAXIMO NO. N82470-08-D-1001
JOB ORDER NO. WE-25
SPEC. NO.
CONSTR. CONTR. NO. 112G02223
NAVFAC DRAWING NO.
SHEET OF --

C-4

NOV 07 2012

NASSAU COUNTY DEPARTMENT OF HEALTH
DIVISION OF ENVIRONMENTAL HEALTH
These plans are hereby approved
SHEET 8 OF 69
See first sheet hereof for date and signature

UNAUTHORIZED ALTERATION OR ADDITION TO THIS PLAN IS A VIOLATION OF SECTION ... EDUCATION LAW, UNLESS THE PERSON IS ACTING ... PROFESSIONAL ENGINEER. ANY PLAN ... INCLUDING THE

Tap #	Description	Type	Main	Outlet	Valve
1	Iron Effluent to GAC Influent	Large Wet Tap	16	16	16 Gate
2	Main Backwash Supply to GAC Backwash Supply	Large Wet Tap	12	8	8" Gate
3	Main to "Domestic"	Small Wet Tap	12	2	2" Curb Stop
4	GAC Effluent to 2-Way Main w/ (2) 12"x16" reducers	16" Tee w/ (2) 12"x16" reducers (Dry)	12	16	16" Gate

Valve Insert #	Description	Note:
1	12" Gate near east entrance (to the East of Tap 4), wet	Not needed if a valve exists between Tap 4 and Seaman's Neck Road main

Tapping Sequence:	Instruction:	Notes:
1	Install Tap 1 (Wet), keep new valve closed	
2	Install Tap 2 (Wet), keep new valve closed	
3	Install Tap 3 (Wet), keep new valve closed	
4	Install Valve Insert "1"	
5	Close Valve Insert "1"	
6	Close Valve "EX-1"	West side of main stays wet
7	Install Tap 4 (Dry), keep new valve closed	
8	Open Valve Insert "1"	Consider bleeding the line to clear out air pocket
9	Open Valve "EX-1"	System is operating in original sequence with all taps installed
10	Open GAC blow-off	
11	Open valve at Tap 1	GAC is now blowing-off while plant functions in original sequence
-	Proceed with system start-up, and bring system on-line per Department of Health.	Completely break the existing direct connection from the iron filtration plant to the main once the new facility is on-line.

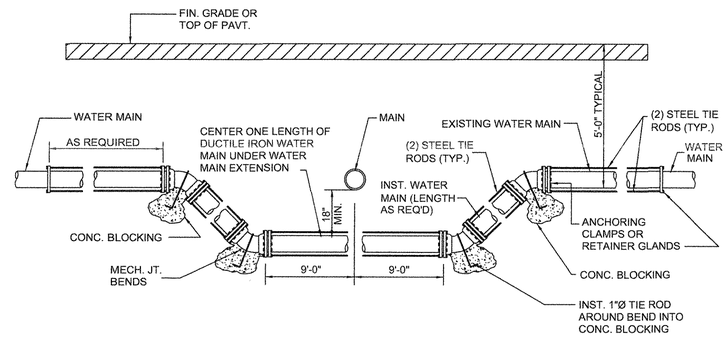

Crossing #	Description	Note:
A	GAC influent above iron backwash supply	Assume iron backwash supply crosses above iron filtration effluent
B	GAC influent under finish main	
C	GAC Backwash under finish main	
D	GAC waste under finish main	See sewer profile

1 / C-5 DETAIL: **PIPE CROSSING**

NOT TO SCALE

FOR ADDITIONAL INFORMATION REGARDING THRUST BLOCKS AND THRUST RESTRAINTS, SEE DETAIL 1 ON SHEET C-6 AS WELL AS N.Y. STATE DEPARTMENT OF TRANSPORTATION STANDARD SHEETS SHEETS 663-02 AND 663-03

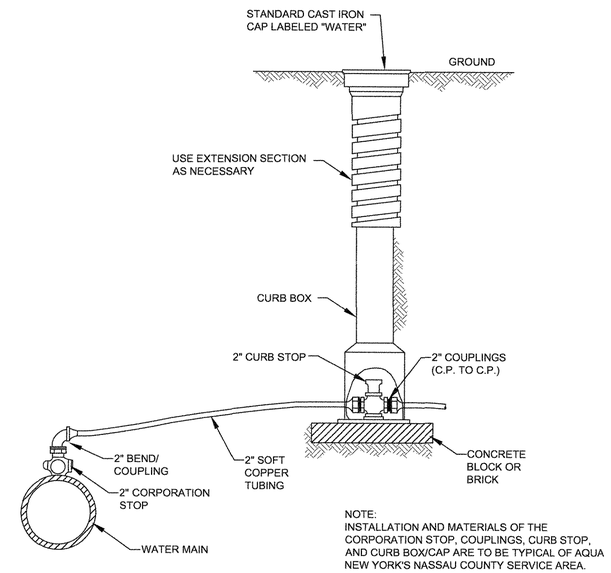

NOTE:
INSTALLATION AND MATERIALS OF THE CORPORATION STOP, COUPLINGS, CURB STOP, AND CURB BOX/CAP ARE TO BE TYPICAL OF AQUA NEW YORK'S NASSAU COUNTY SERVICE AREA.

2 / C-5 DETAIL: **SMALL WET TAP (WATER SERVICE) WITH CORPORATION STOP AND CURB STOP**

NOT TO SCALE

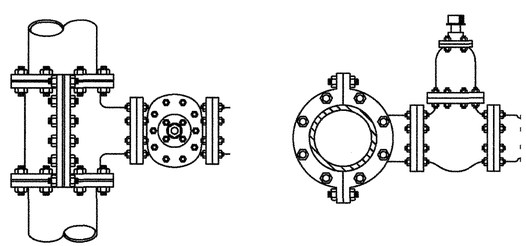

3 / C-5 DETAIL: **TYPICAL LARGE WET TAP W/ SADDLE AND GATE VALVE**

NOT TO SCALE

- WET TAPPING METHOD SUBJECT TO APPROVAL OF AQUA NEW YORK
- SIDE-OPERATED GATE VALVES MAY BE SUBSTITUTED IF COVER IS AN ISSUE

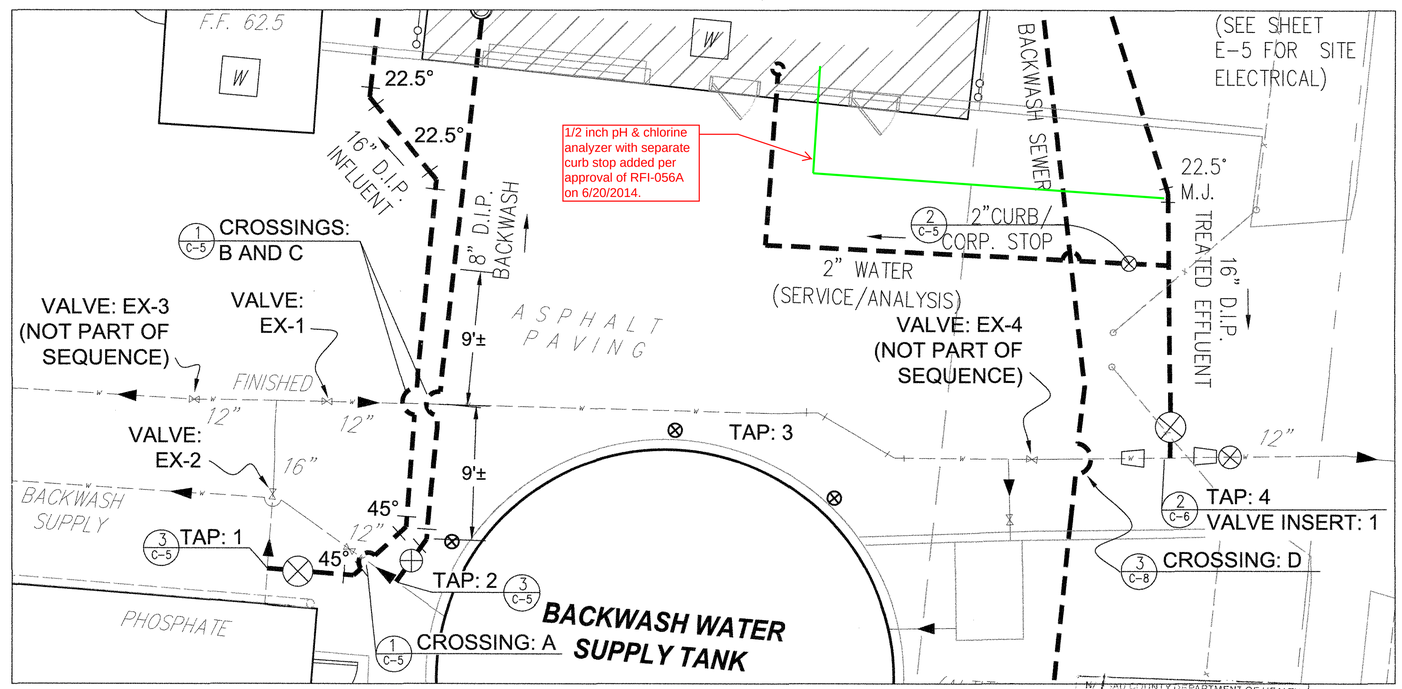

PLAN VIEW: 1" = 5'

DISCLAIMER:
THE PROPOSED PIPE LAYOUT, TAPPING METHODS, AND TAPPING SEQUENCE ARE BASED UPON BEST AVAILABLE KNOWLEDGE OF THE EXISTING UNDERGROUND PIPING LAYOUT. THE EXISTING UNDERGROUND PIPE LAYOUT MAY NOT MATCH THE PLAN. LAYOUT, CONSTRUCTION METHODS, AND TAPPING SEQUENCE ARE SUBJECT TO FIELD CONDITIONS AND ARE THE RESPONSIBILITY OF THE CONTRACTOR.

NASSAU COUNTY DEPARTMENT OF HEALTH
DIVISION OF ENVIRONMENTAL HEALTH
These plans are hereby approved
SHEET 9 OF 69
See first sheet hereof for date and signature

CAUTION: IF SHEET IS LESS THAN 34"x22" USE GRAPHIC SCALE

UNAUTHORIZED ALTERATION OR ADDITION TO THIS PLAN IS A VIOLATION OF SECTION 7209 OF THE NEW YORK STATE EDUCATION LAW, UNLESS THE PERSON IS ACTING UNDER THE DIRECTION OF A LICENSED PROFESSIONAL ENGINEER. ANY PLAN ALTERATIONS BY ANOTHER ENGINEER MUST BE MARKED AS SUCH, INCLUDING THE SIGNATURE AND SEAL OF THE ALTERING ENGINEER.

#	DATE	DESCRIPTION	APP'R
-	3/30/12	APPROVAL - SUBMISSION	

STATE OF NEW YORK · JOHN DANIEL BEACH · 080636 · LICENSED PROFESSIONAL ENGINEER

DEPARTMENT OF THE NAVY
NAVAL FACILITIES ENGINEERING COMMAND
NORTHEAST IPT
AQUA NY

NAVAL FACILITIES ENGINEERING COMMAND ~ MID-ATLANTIC
NAVAL STATION - NORFOLK, VIRGINIA

NASSAU COUNTY, NEW YORK

MODIFICATIONS TO WATER TREATMENT FACILITY

UTILITY TIE IN DETAIL

DES CSG	DR SNL
REVIEWED BY	HKM
PM/DM	
CHIEF ENG/ARCH	HKM
CODE ID. NO. 80091	SIZE D
SCALE:	1"=5'-0"
MAXIMO NO. N62470-08-D-1001	
JOB ORDER NO. WE-25	
SPEC. NO.	
CONSTR. CONTR. NO.	112G02223
NAVFAC DRAWING NO.	
SHEET	OF --
C-5	

NOV 07 2012

K:\112G02223 - Aqua Bethpage-Navy Project - H. Mta\Drawings\Civil\02223_Utility_Tie.dwg 03/28/2012 09:47

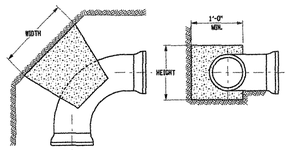

90° BEND THRUST BLOCK DIMENSIONING					
PIPE SIZE	WIDTH (FT-IN)	HEIGHT (FT-IN)	PIPE SIZE	WIDTH (FT-IN)	HEIGHT (FT-IN)
4 NPS	2'-3"	1'-3"	14 NPS	7'-3"	3'-6"
6 NPS	3'-3"	1'-9"	16 NPS	8'-3"	4'-0"
8 NPS	4'-3"	2'-3"	18 NPS	9'-3"	4'-6"
10 NPS	5'-3"	2'-6"	20 NPS	10'-6"	5'-0"
12 NPS	6'-0"	3'-3"	24 NPS	12'-6"	6'-0"

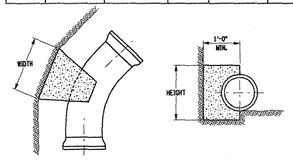

45° BEND THRUST BLOCK DIMENSIONING					
PIPE SIZE	WIDTH (FT-IN)	HEIGHT (FT-IN)	PIPE SIZE	WIDTH (FT-IN)	HEIGHT (FT-IN)
4 NPS	2'-0"	0'-9"	14 NPS	5'-3"	2'-6"
6 NPS	2'-6"	1'-3"	16 NPS	6'-0"	3'-3"
8 NPS	3'-3"	1'-9"	18 NPS	7'-3"	3'-3"
10 NPS	4'-0"	2'-0"	20 NPS	7'-3"	4'-0"
12 NPS	4'-6"	2'-3"	24 NPS	8'-9"	4'-6"

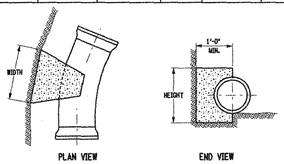

22½° BEND THRUST BLOCK DIMENSIONING					
PIPE SIZE	WIDTH (FT-IN)	HEIGHT (FT-IN)	PIPE SIZE	WIDTH (FT-IN)	HEIGHT (FT-IN)
4 NPS	1'-3"	0'-9"	14 NPS	3'-6"	2'-0"
6 NPS	2'-0"	0'-9"	16 NPS	4'-6"	2'-3"
8 NPS	2'-3"	1'-3"	18 NPS	5'-6"	2'-6"
10 NPS	3'-0"	1'-3"	20 NPS	5'-0"	3'-0"
12 NPS	3'-3"	1'-9"	24 NPS	6'-3"	3'-3"

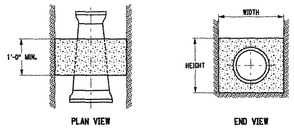

REDUCER THRUST BLOCK DIMENSIONING					
SIZE	WIDTH (FT-IN)	HEIGHT (FT-IN)	SIZE	WIDTH (FT-IN)	HEIGHT (FT-IN)
6x4 NPS	1'-6"	1'-6"	16x8 NPS	4'-6"	4'-6"
8x4 NPS	2'-3"	2'-3"	16x10 NPS	4'-0"	4'-0"
8x6 NPS	1'-9"	1'-9"	16x12 NPS	3'-6"	3'-6"
10x6 NPS	2'-6"	2'-6"	20x12 NPS	5'-0"	5'-0"
10x8 NPS	2'-0"	2'-0"	20x16 NPS	4'-0"	4'-0"
12x6 NPS	3'-3"	3'-3"	24x12 NPS	6'-6"	6'-6"
12x8 NPS	3'-0"	3'-0"	24x16 NPS	5'-9"	5'-9"
12x10 NPS	2'-3"	2'-3"	24x20 NPS	4'-6"	4'-6"

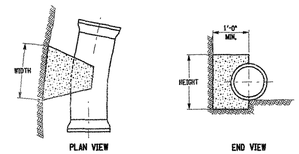

11¼° BEND THRUST BLOCK DIMENSIONING					
PIPE SIZE	WIDTH (FT-IN)	HEIGHT (FT-IN)	PIPE SIZE	WIDTH (FT-IN)	HEIGHT (FT-IN)
4 NPS	1'-0"	0'-6"	14 NPS	3'-0"	1'-3"
6 NPS	1'-3"	0'-9"	16 NPS	3'-3"	1'-6"
8 NPS	1'-9"	0'-9"	18 NPS	3'-6"	1'-9"
10 NPS	2'-0"	1'-0"	20 NPS	3'-6"	2'-0"
12 NPS	2'-3"	1'-3"	24 NPS	4'-6"	2'-3"

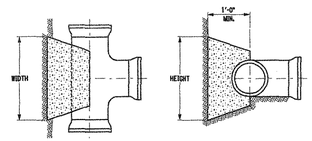

TEE/DEAD END THRUST BLOCK DIMENSIONING					
PIPE SIZE	WIDTH (FT-IN)	HEIGHT (FT-IN)	PIPE SIZE	WIDTH (FT-IN)	HEIGHT (FT-IN)
4 NPS	2'-0"	1'-0"	14 NPS	5'-6"	3'-3"
6 NPS	3'-0"	1'-3"	16 NPS	6'-6"	3'-6"
8 NPS	3'-3"	2'-0"	18 NPS	7'-6"	4'-0"
10 NPS	4'-3"	2'-3"	20 NPS	8'-6"	4'-3"
12 NPS	5'-3"	2'-6"	24 NPS	10'-3"	5'-3"

MINIMUM RESTRAINED LENGTH OF PIPE (FT-IN) L_R									
FITTING	4 NPS	6 NPS	8 NPS	10 NPS	12 NPS	14 NPS	16 NPS	18 NPS	20 NPS	24 NPS
11¼° BEND	1'-3"	2'-0"	2'-6"	3'-0"	3'-6"	4'-0"	4'-6"	5'-0"	5'-6"	6'-3"
22½° BEND	1'-3"	2'-0"	2'-6"	3'-0"	3'-6"	4'-0"	4'-6"	5'-0"	5'-6"	6'-6"
45° BEND	3'-0"	4'-0"	5'-3"	6'-3"	7'-6"	8'-6"	9'-6"	10'-6"	11'-6"	13'-6"
90° BEND	7'-0"	9'-9"	12'-6"	15'-6"	18'-0"	20'-6"	23'-0"	25'-6"	28'-0"	32'-6"
DEAD END	8'-6"	12'-6"	16'-0"	19'-3"	23'-0"	26'-0"	29'-6"	33'-0"	36'-0"	42'-0"

* DIMENSIONS ARE IN FT-IN FORMAT

* FOR POLYETHYLENE WRAPPED PIPE, MULTIPLY VALUES IN TABLE BY 1.45

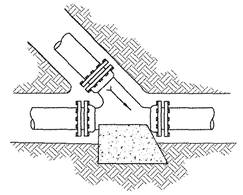

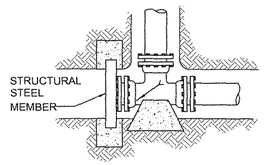

THRUST BLOCK TYPES IN ADDITION TO THE STANDARD NYSDOT DETAIL.

UNAUTHORIZED ALTERATION OR ADDITION TO THIS PLAN IS A VIOLATION OF SECTION 7209 OF THE NEW YORK STATE EDUCATION LAW, UNLESS THE PERSON IS ACTING UNDER THE DIRECTION OF A LICENSED PROFESSIONAL ENGINEER. ANY PLAN ALTERATIONS BY ANOTHER ENGINEER MUST BE MARKED AS SUCH, INCLUDING THE SIGNATURE AND SEAL OF THE ALTERING ENGINEER.

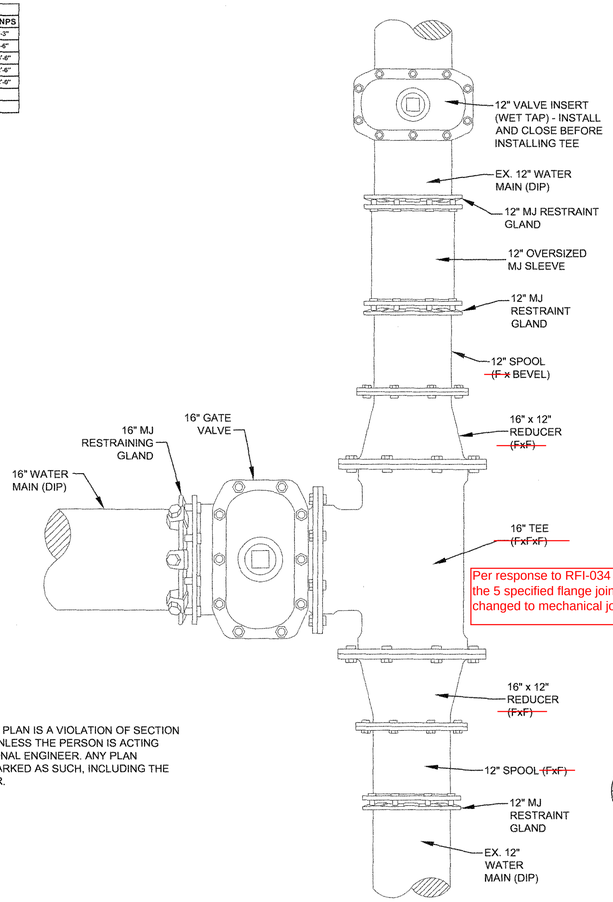

Per response to RFI-034 (dated 9/05/2013), the 5 specified flange joints have been changed to mechanical joints.

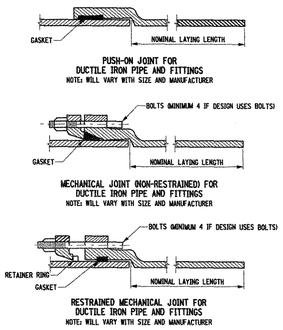

MECHANICAL JOINT BOLT TORQUE		
NPS SIZE	BOLT SIZE	TORQUE(LBF/FT)
3	⅝"	45-60
4-24	¾"	75-90
30-36	1	100-120
42-48	1¼"	120-150

MAXIMUM JOINT DEFLECTION			
NPS SIZE	PUSH-ON JOINTS		MJ JOINTS
	18' DI	20' DI	18/20 FT.
3	5°	5°	8°
4	5°	5°	8°
6	5°	5°	7°
8	5°	5°	5°
10	5°	5°	5°
12	5°	5°	5°
14	3°	3°	3.5°
16	3°	3°	3.5°
18	3°	3°	3°
20	3°	3°	3°
24	3°	3°	2°
30	3°	3°	N/A
36	3°	3°	N/A
42	3°	3°	N/A
48	N/A	3°	N/A
54	N/A	3°	N/A
60	N/A	3°	N/A
64	N/A	3°	N/A

3 — DETAIL: **D.I.P. JOINT DETAILS**

NOT TO SCALE

SOURCE: N.Y. STATE DEPARTMENT OF TRANSPORTATION STANDARD SHEETS: SHEET 663-01

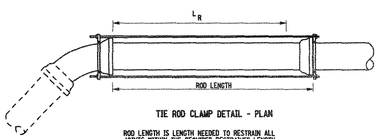

TIE ROD CLAMP DETAIL - PLAN

ROD LENGTH IS LENGTH NEEDED TO RESTRAIN ALL JOINTS WITHIN THE REQUIRED RESTRAINED LENGTH L_R

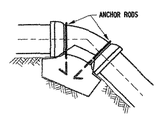

VERTICAL BEND GRAVITY BLOCK - ELEVATION

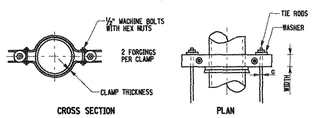

TIE ROD CLAMP DETAIL

MINIMUM GRAVITY BLOCK VOLUMES FOR VERTICAL BENDS (2)										
FITTING	PIPE SIZE									
	4 NPS	6 NPS	8 NPS	10 NPS	12 NPS	14 NPS	16 NPS	18 NPS	20 NPS	24 NPS
11¼°	4°	11 19/16°	1'-7 7/16°	2'-3 9/16°	3'-3 5/8°	4'-3 3/16°	5'-7°	6'-10 11/16°	8'-6 3/8°	12'-1 15/16°
22½°	11 7/16°	1'-7 7/16°	2'-11 3/16°	4'-7 1/4°	6'-3°	8'-6 3/8°	11'-1 3/8°	13'-9 3/8°	17'-3°	24'-3 7/16°
45°	1'-7 7/16°	3'-3 3/8°	5'-10 3/8°	8'-10 9/16°	12'-6 5/8°	16'-9 7/16°	21'-7 7/16°	27'-2 7/8°	33'-5 7/8°	47'-6 3/8°
90°	2'-11 3/16°	6'-3°	10'-9 7/16°	16'-4 13/16°	22'-11 13/16°	30'-10 1/4°	40'-3/16°	50'-2 3/8°	61'-8 15/16°	88'-3 7/16°

TIE RODS AND CLAMPS				
PIPE SIZE	ROD SIZE		CLAMP SIZE	
	RECOMENDED DIA.	MIN. AREA (IN²)	THICKNESS	WIDTH
4 NPS	2 - 15/16"	¾	½"	1"
6 NPS	2 - 15/16"	¾	½"	1"
8 NPS	2 - 1"	1¼	½"	1"
10 NPS	2 - 1 1/8"	1⅞	½"	1"
12 NPS	2 - 1 3/8"	2	½"	1"
14 NPS	2 - 1 3/8"	2	½"	1"
16 NPS	4 - 1 3/8"	5⅝	SEE NOTE 10	
18 NPS	4 - 1 3/8"	5⅝	SEE NOTE 10	
20 NPS	4 - 1 1/2"	10¼	SEE NOTE 10	
24 NPS	4 - 1 1/2"	10¼	SEE NOTE 10	

ANCHOR ROD SCHEDULE FOR GRAVITY BLOCKS		
PIPE SIZE	RODS	MIN. EMBEDMENT LENGTH
4 NPS	1 - #10 (3)	8"
6 NPS	1 - #10 (3)	6"
8 NPS	2 - #13 (4)	6"
10 NPS	2 - #13 (4)	6"
12 NPS	2 - #16 (5)	7"
14 NPS	2 - #19 (6)	8"
16 NPS	2 - #19 (6)	8"
18 NPS	2 - #22 (7)	10"
20 NPS	2 - #25 (8)	11"
24 NPS	2 - #29 (9)	12"

NUMBERS IN PARENTHESIS ARE BAR SIZES MARKED IN EIGHTHS OF INCHES

FOR VERTICAL DOWNWARD BENDS:

$$L_R = \frac{S.F. \times P \times AREA \times TAN\ (1/2\ BEND\ ANGLE)}{F_F}$$

FOR VERTICAL UPWARD BENDS:

$$L_R = \frac{S.F. \times P \times AREA \times TAN\ (1/2\ BEND\ ANGLE)}{F_F + \frac{1}{2} R}$$

SOURCE: DUCTILE IRON PIPE RESEARCH ASSOCIATION

MINIMUM RESTRAINED LENGTH OF PIPE (L_R)										
	4 NPS	6 NPS	8 NPS	10 NPS	12 NPS	14 NPS	16 NPS	18 NPS	20 NPS	24 NPS
VERTICAL UPWARD BENDS										
11¼°	1'-3 5/16"	2'-0"	2'-7 3/16"	3'-0"	3'-7 3/16"	3'-10 9/16"	4'-3 7/16"	4'-10 9/16"	5'-3 7/16"	6'-2 5/16"
22½°	1'-3 5/16"	2'-0"	2'-7 3/16"	3'-0"	3'-7 3/16"	3'-10 9/16"	4'-3 7/16"	4'-10 9/16"	5'-3 7/16"	6'-2 5/16"
45°	3'-0"	3'-8 9/16"	5'-3"	6'-3"	7'-6"	8'-6"	9'-6"	10'-6"	11'-6"	13'-4 1/2"
90°	6'-10 9/16"	9'-9 9/16"	12'-6"	15'-4 7/16"	18'-0"	20'-4 7/16"	23'-0"	25'-1 7/16"	27'-10 1/2"	32'-6"
VERTICAL DOWNWARD BENDS										
11¼°	3'-3 5/16"	4'-10 9/16"	6'-2 5/16"	7'-6"	9'-2 5/16"	10'-6"	11'-5 5/16"	12'-9 5/16"	14'-1 3/16"	16'-8 9/16"
22½°	6'-10 9/16"	9'-9 9/16"	12'-6 5/16"	15'-4 7/16"	18'-4 7/16"	21'-0"	23'-1 7/16"	26'-2 5/16"	28'-6"	33'-9 7/16"
45°	14'-4 7/16"	20'-3 5/16"	26'-1 7/16"	32'-1 3/16"	38'-0"	43'-7 3/16"	48'-11"	54'-4 7/16"	59'-8 3/16"	69'10 1/16"
90°	34'-9 5/16"	49'-2 5/16"	64'-0"	77'-6 5/16"	91'-6"	105'-0"	118'-4 3/16"	131'-2 5/16"	144'-0"	169'-0"

NOTE: FOR POLYETHYLENE WRAPPED PIPE, MULTIPLY VALUES IN TABLE BY 1.45

1 — DETAIL: **THRUST BLOCKS AND THRUST RESTRAINTS**

NOT TO SCALE

SOURCE: N.Y. STATE DEPARTMENT OF TRANSPORTATION STANDARD SHEETS SHEETS 663-02 AND 663-03

2 C-5 DETAIL: **WATER MAIN TIE-IN**

NOT TO SCALE

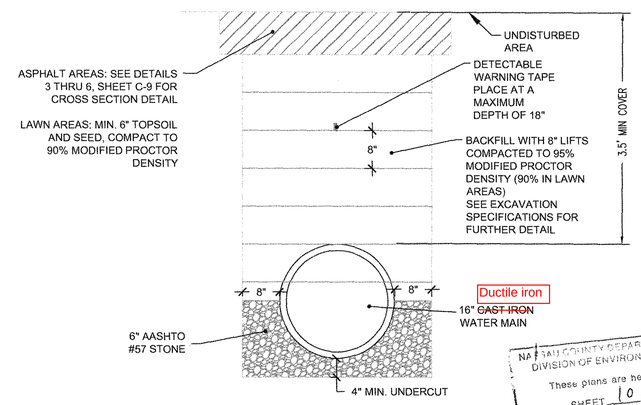

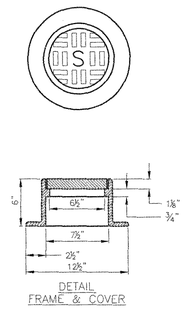

NOTES:

MATERIAL: 6" SCH-40, PIPE AND FITTINGS

NASSAU COUNTY DEPARTMENT OF HEALTH
DIVISION OF ENVIRONMENTAL HEALTH
These plans are hereby approved
SHEET 10 OF 69
See first sheet hereof for date and signature

4 C-2 SECTION: **WATER MAIN TRENCH**

NOT TO SCALE

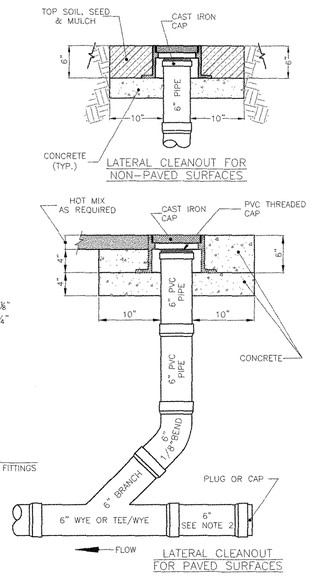

5 C-2 DETAIL: **4" PVC CLEANOUT**

NOT TO SCALE USE FOR BACKWASH WASTE AND DOWNSPOUTS

CAUTION: IF SHEET IS LESS THAN 34"x22" USE GRAPHIC SCALE

DATE	APPR	DESCRIPTION
9/9/2011		NASSAU COUNTY DEPT. OF HEALTH SUBMITTAL

NAVFAC

STATE OF NEW YORK — DAVID DANIEL BERRACK — 085336 — LICENSED PROFESSIONAL ENGINEER

DES CSG	DR CSG
REVIEWED BY	HKM
PM/DM	DDB
CHIEF ENG/ARCH	HKM

DEPARTMENT OF THE NAVY
NAVAL FACILITIES ENGINEERING COMMAND ~ MID-ATLANTIC
NORTHEAST IPT — NAVAL STATION - NORFOLK, VIRGINIA
AQUA NY — NASSAU COUNTY, NEW YORK

MODIFICATIONS TO WATER TREATMENT FACILITY

SITE DETAILS

CODE ID. NO. 80091	SIZE D
SCALE:	NTS
MAXIMO NO. N62470-08-D-1001	-
JOB ORDER NO. WE-25	-
SPEC. NO.	-
CONSTR. CONTR. NO. 112G02223	
NAVFAC DRAWING NO.	
SHEET	OF --

C-6

K:\112G02223 - Aqua Bethpage-Navy Project - H. Mitch\Drawings\Civil\02223_Details.dwg 09/07/2011 09:39

NOV 07 2012

10

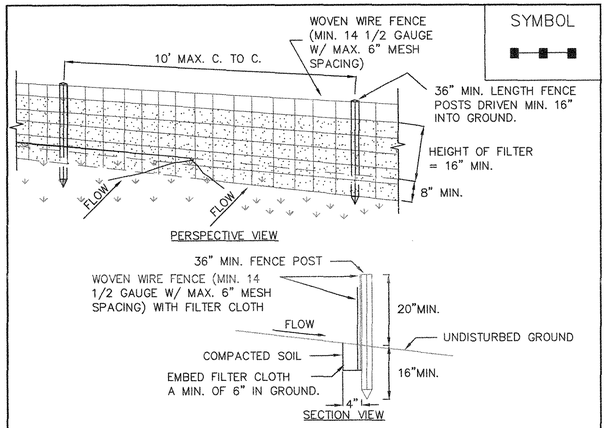

CONSTRUCTION SPECIFICATIONS

1. WOVEN WIRE FENCE TO BE FASTENED SECURELY TO FENCE POSTS WITH WIRE TIES OR STAPLES. POSTS SHALL BE STEEL EITHER "T" OR "U" TYPE OR HARDWOOD.
2. FILTER CLOTH TO BE TO BE FASTENED SECURELY TO WOVEN WIRE FENCE WITH TIES SPACED EVERY 24" AT TOP AND MID SECTION. FENCE SHALL BE WOVEN WIRE, 12 1/2 GAUGE, 6" MAXIMUM MESH OPENING.
3. WHEN TWO SECTIONS OF FILTER CLOTH ADJOIN EACH OTHER THEY SHALL BE OVER-LAPPED BY SIX INCHES AND FOLDED. FILTER CLOTH SHALL BE EITHER FILTER X, MIRAFI 100X, STABILINKA T140N, OR APPROVED EQUIVALENT.
4. PREFABRICATED UNITS SHALL BE GEOFAB, ENVIROFENCE, OR APPROVED EQUIVALENT.
5. MAINTENANCE SHALL BE PERFORMED AS NEEDED AND MATERIAL REMOVED WHEN "BULGES" DEVELOP IN THE SILT FENCE.

U.S. DEPARTMENT OF AGRICULTURE NATURAL RESOURCES CONSERVATION SERVICE NEW YORK STATE DEPARTMENT OF ENVIRONMENTAL CONSERVATION NEW YORK STATE SOIL & WATER CONSERVATION COMMITTEE	SILT FENCE

1 C-4 DETAIL: **SILT FENCE**
NOT TO SCALE
SOURCE: NYSDEC E&S DETAILS (ADOPTED FROM USDA NRCS)

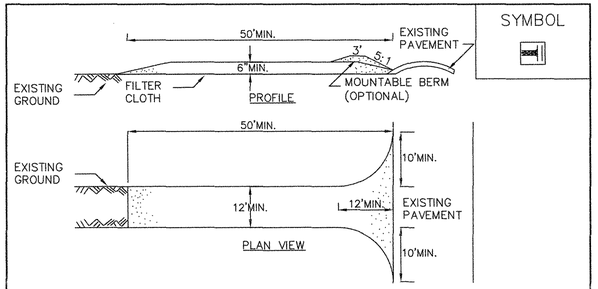

CONSTRUCTION SPECIFICATIONS

1. STONE SIZE – USE 2" STONE, OR RECLAIMED OR RECYCLED CONCRETE EQUIVALENT.
2. LENGTH – NOT LESS THAN 50 FEET (EXCEPT ON A SINGLE RESIDENCE LOT WHERE A 30 FOOT MINIMUM LENGTH WOULD APPLY).
3. THICKNESS – NOT LESS THAN SIX (6) INCHES.
4. WIDTH – TWELVE (12) FOOT MINIMUM, BUT NOT LESS THAN THE FULL WIDTH AT POINTS WHERE INGRESS OR EGRESS OCCURS. TWENTY-FOUR (24) FOOT IF SINGLE ENTRANCE TO SITE.
5. FILTER CLOTH – WILL BE PLACED OVER THE ENTIRE AREA PRIOR TO PLACING OF STONE.
6. SURFACE WATER – ALL SURFACE WATER FLOWING OR DIVERTED TOWARD CON-STRUCTION ENTRANCES SHALL BE PIPED ACROSS THE ENTRANCE. IF PIPING IS IMPRACTICAL, A MOUNTABLE BERM WITH 5:1 SLOPES WILL BE PERMITTED.
7. MAINTENANCE – THE ENTRANCE SHALL BE MAINTAINED IN A CONDITION WHICH WILL PREVENT TRACKING OR FLOWING OF SEDIMENT ONTO PUBLIC RIGHTS-OF-WAY, ALL SEDIMENT SPILLED, DROPPED, WASHED OR TRACTED ONTO PUBLIC RIGHTS-OF-WAY MUST BE REMOVED IMMEDIATELY.
8. WHEN WASHING IS REQUIRED, IT SHALL BE DONE ON A AREA STABILIZED WITH STONE AND WHICH DRAINS INTO AN APPROVED SEDIMENT TRAPPING DEVICE.
9. PERIODIC INSPECTION AND NEEDED MAINTENANCE SHALL BE PROVIDED AFTER EACH RAIN.

U.S. DEPARTMENT OF AGRICULTURE NATURAL RESOURCES CONSERVATION SERVICE NEW YORK STATE DEPARTMENT OF ENVIRONMENTAL CONSERVATION NEW YORK STATE SOIL & WATER CONSERVATION COMMITTEE	STABILIZED CONSTRUCTION ENTRANCE

2 C-4 DETAIL: **STABILIZED CONSTRUCTION ENTRANCE**
NOT TO SCALE
SOURCE: NYSDEC E&S DETAILS (ADOPTED FROM USDA NRCS)

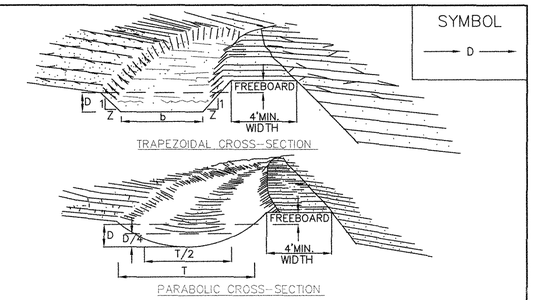

CONSTRUCTION SPECIFICATIONS

1. ALL TREES, BRUSH, STUMPS, OBSTRUCTIONS, AND OTHER OBJECTIONABLE MATERIAL SHALL BE REMOVED AND DISPOSED OF SO AS NOT TO INTERFERE WITH THE PROPER FUNCTIONING OF THE DIVERSION.
2. THE DIVERSION SHALL BE EXCAVATED OR SHAPED TO LINE, GRADE, AND CROSS SECTION AS REQUIRED TO MEET THE CRITERIA SPECIFIED HEREIN, AND BE FREE OF BANK PROJECTIONS OR OTHER IRREGULARITIES WHICH WILL IMPEDE NORMAL FLOW.
3. FILLS SHALL BE COMPACTED AS NEEDED TO PREVENT UNEQUAL SETTLEMENT THAT WOULD CAUSE DAMAGE IN THE COMPLETE DIVERSION.
4. ALL EARTH REMOVED AND NOT NEEDED IN CONSTRUCTION SHALL BE SPREAD OR DISPOSED OF SO THAT IT WILL NOT INTERFERE WITH THE FUNCTIONING OF THE DIVERSION.
5. STABILIZATION SHALL BE DONE ACCORDING TO THE APPROPRIATE STANDARD AND SPECIFICATIONS FOR VEGETATIVE PRACTICES.
   A. FOR DESIGN VELOCITIES OF LESS THAN 3.5 FT. PER. SEC., SEEDING AND MULCHING MAY BE USED FOR THE ESTABLISHMENT OF THE VEGETATION. IT IS RECOMMENDED THAT, WHEN CONDITIONS PERMIT, TEMPORARY DIVERSIONS OR OTHER MEANS SHOULD BE USED TO PREVENT WATER FROM ENTERING THE DIVERSION DURING THE ESTABLISHMENT OF THE VEGETATION.
   B. FOR DESIGN VELOCITIES OF MORE THAN 3.5 FT. PER. SEC., THE DIVERSION SHALL BE STABILIZED WITH SOD, WITH SEEDING PROTECTED BY JUTE OR EXCELSIOR MATTING OR WITH SEEDING AND MULCHING INCLUDING TEMPORARY DIVERSION OF THE WATER UNTIL THE VEGETATION IS ESTABLISHED.

U.S. DEPARTMENT OF AGRICULTURE NATURAL RESOURCES CONSERVATION SERVICE NEW YORK STATE DEPARTMENT OF ENVIRONMENTAL CONSERVATION NEW YORK STATE SOIL & WATER CONSERVATION COMMITTEE	DIVERSION

3 C-4 DETAIL: **DIVERSION**
NOT TO SCALE
SOURCE: NYSDEC E&S DETAILS (ADOPTED FROM USDA NRCS)

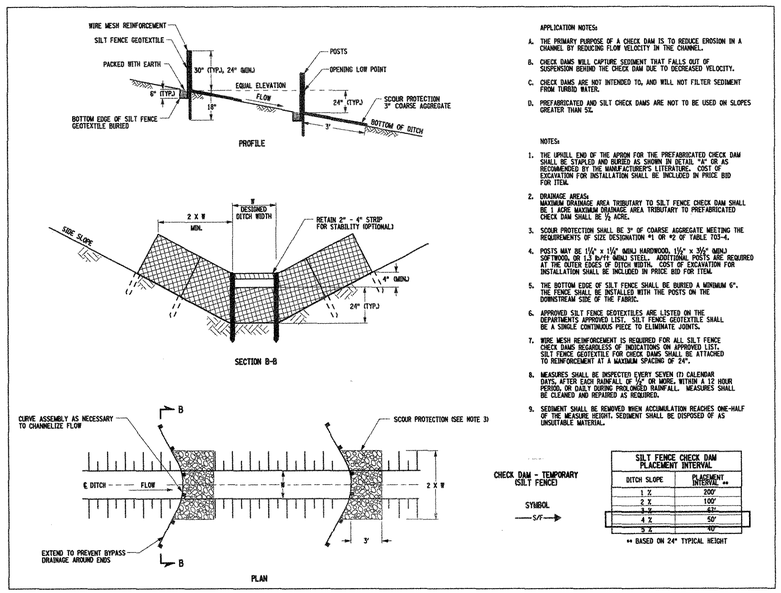

APPLICATION NOTES:

A. THE PRIMARY PURPOSE OF A CHECK DAM IS TO REDUCE EROSION IN A CHANNEL BY REDUCING FLOW VELOCITY IN THE CHANNEL.
B. CHECK DAMS WILL CAPTURE SEDIMENT THAT FALLS OUT OF SUSPENSION BEHIND THE CHECK DAM DUE TO DECREASED VELOCITY.
C. CHECK DAMS ARE NOT INTENDED TO, AND WILL NOT FILTER SEDIMENT FROM TURBID WATER.
D. PREFABRICATED AND SILT CHECK DAMS ARE NOT TO BE USED ON SLOPES GREATER THAN 5%.

NOTES:

1. THE UPHILL END OF THE APRON FOR THE PREFABRICATED CHECK DAM SHALL BE STAPLED AND BURIED AS SHOWN IN DETAIL "A" OR AS RECOMMENDED BY THE MANUFACTURER'S LITERATURE. COST OF EXCAVATION FOR INSTALLATION SHALL BE INCLUDED IN PRICE BID FOR ITEM.
2. DRAINAGE AREAS: MAXIMUM DRAINAGE AREA TRIBUTARY TO SILT FENCE CHECK DAM SHALL BE 1 ACRE MAXIMUM DRAINAGE AREA TRIBUTARY TO PREFABRICATED CHECK DAM SHALL BE ½ ACRE.
3. SCOUR PROTECTION SHALL BE 3" OF COARSE AGGREGATE MEETING THE REQUIREMENTS OF SIZE DESIGNATION #1 OR #2 OF TABLE 703-4.
4. POSTS MAY BE 1½" x 1½" (MIN) HARDWOOD, 1½" x 1½" (MIN) NORTHWOOD, OR 1.3 lb/ft (MIN) STEEL. ADDITIONAL POSTS ARE REQUIRED AT THE OUTER EDGES OF DITCH WIDTH. COST OF EXCAVATION FOR INSTALLATION SHALL BE INCLUDED IN PRICE BID FOR ITEM.
5. THE BOTTOM EDGE OF SILT FENCE SHALL BE BURIED A MINIMUM 6". THE FENCE SHALL BE INSTALLED WITH THE POSTS ON THE DOWNSTREAM SIDE OF THE FABRIC.
6. APPROVED SILT FENCE GEOTEXTILES ARE LISTED ON THE DEPARTMENT'S APPROVED LIST. SILT FENCE GEOTEXTILE SHALL BE A SINGLE CONTINUOUS PIECE TO ELIMINATE JOINTS.
7. WIRE MESH REINFORCEMENT IS REQUIRED FOR ALL SILT FENCE CHECK DAMS REGARDLESS OF INDICATIONS ON APPROVED LIST. SILT FENCE GEOTEXTILE FOR CHECK DAMS SHALL BE ATTACHED TO REINFORCEMENT AT A MAXIMUM SPACING OF 24".
8. MEASURES SHALL BE INSPECTED EVERY SEVEN (7) CALENDAR DAYS, AFTER EACH RAINFALL OF ½" OR MORE, WITHIN A 12 HOUR PERIOD, OR DAILY DURING PROLONGED RAINFALL. MEASURES SHALL BE CLEANED AND REPAIRED AS REQUIRED.
9. SEDIMENT SHALL BE REMOVED WHEN ACCUMULATION REACHES ONE-HALF OF THE MEASURE HEIGHT. SEDIMENT SHALL BE DISPOSED OF AS UNSUITABLE MATERIAL.

CHECK DAM - TEMPORARY (SILT FENCE)

SYMBOL

S/F

SILT FENCE CHECK DAM PLACEMENT INTERVAL	
DITCH SLOPE	PLACEMENT INTERVAL **
1 %	200'
2 %	100'
3 %	67'
4 %	50'
5 %	40'

** BASED ON 24" TYPICAL HEIGHT

4 C-4 DETAIL: **SILT FENCE CHECK DAM**
NOT TO SCALE
SOURCE: N.Y. STATE DEPARTMENT OF TRANSPORTATION STANDARD SHEETS SHEET 209-02 (2 OF 2)

NASSAU COUNTY DEPARTMENT OF HEALTH
DIVISION OF ENVIRONMENTAL HEALTH
These plans are hereby approved
SHEET 11 OF 69
See first sheet hereof for date and signature

UNAUTHORIZED ALTERATION OR ADDITION TO THIS PLAN IS A VIOLATION OF SECTION 7209 OF THE NEW YORK STATE EDUCATION LAW, UNLESS THE PERSON IS ACTING UNDER THE DIRECTION OF A LICENSED PROFESSIONAL ENGINEER. ANY PLAN ALTERATIONS BY ANOTHER ENGINEER MUST BE MARKED AS SUCH, INCLUDING THE SIGNATURE AND SEAL OF THE ALTERING ENGINEER.

CAUTION: IF SHEET IS LESS THAN 34"x22" USE GRAPHIC SCALE

MARK	DATE	DESCRIPTION	BY
	9/9/2011	NASSAU COUNTY DEPT. OF HEALTH SUBMITTAL	

NAVFAC

STATE OF NEW YORK · CHRIS DANIEL BEACH · 082336 · LICENSED PROFESSIONAL ENGINEER

DES	CSG	DR	CSG
REVIEWED BY		HKM	
PM/DM		DDB	
CHIEF ENG/ARCH		HKM	

DEPARTMENT OF THE NAVY
NAVAL FACILITIES ENGINEERING COMMAND ~ MID-ATLANTIC
NORTHEAST IPT
AQUA NY
NAVAL FACILITIES ENGINEERING COMMAND
NAVAL STATION - NORFOLK, VIRGINIA
NASSAU COUNTY, NEW YORK
MODIFICATIONS TO WATER TREATMENT FACILITY
SITE EROSION & SEDIMENT DETAILS

CODE ID. NO. 80091	SIZE D
SCALE:	NTS
MAXIMO NO. N62470-08-D-1001	
JOB ORDER NO. WE-25	
SPEC. NO.	
CONSTR. CONTR. NO. 112G02223	
NAVFAC DRAWING NO.	
SHEET	OF --

C-7

K:\112G02223 - Aqua Bethpage-Navy Project - H. Mitch\Drawings\Civil\02223_Details.dwg 09/07/2011 09:42

NOV 07 2012 11

See next page for revision to the route of the sewer line.

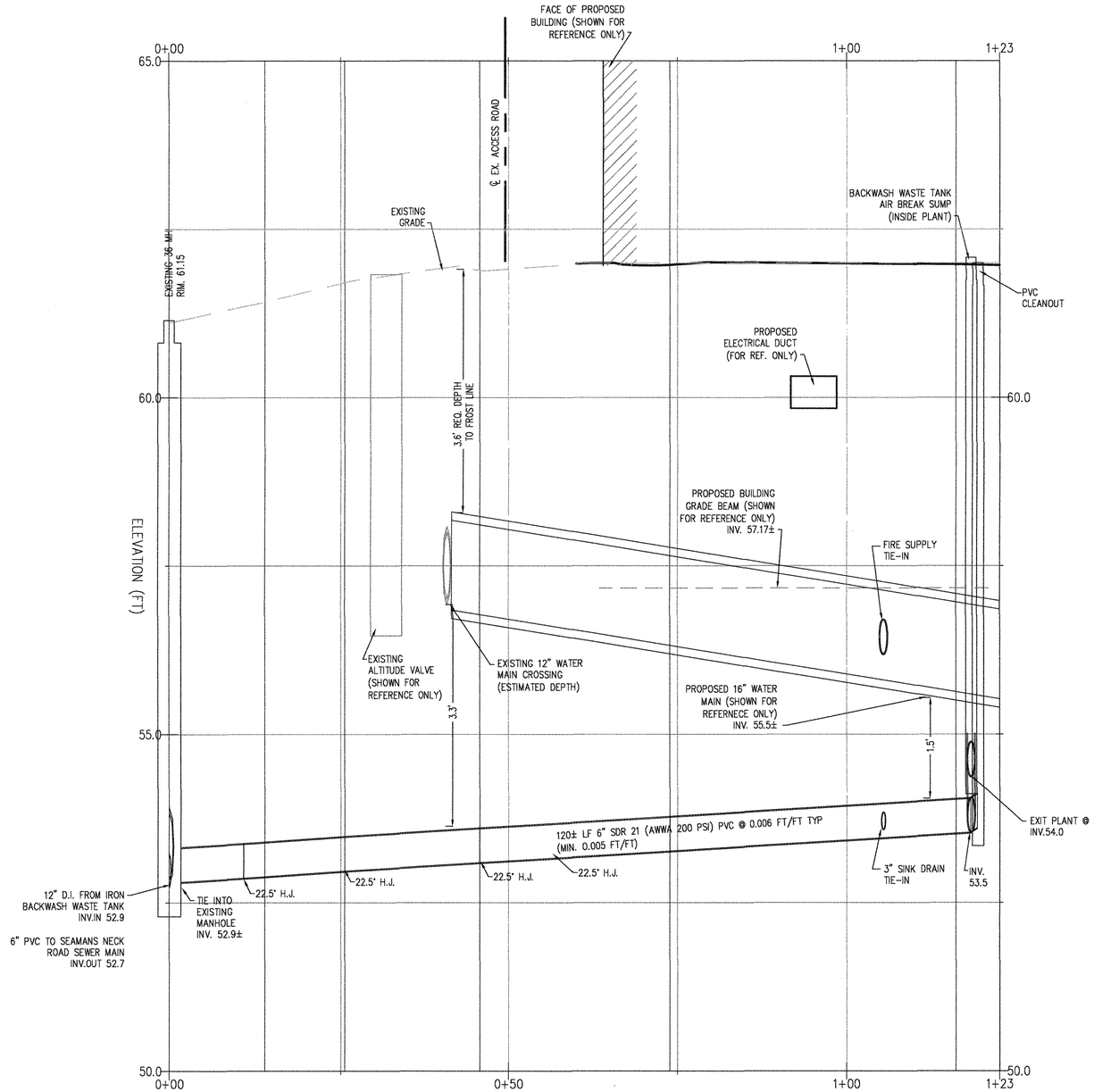

3 / C-8 SECTION: **GRAVITY SEWER - PROFILE VIEW**

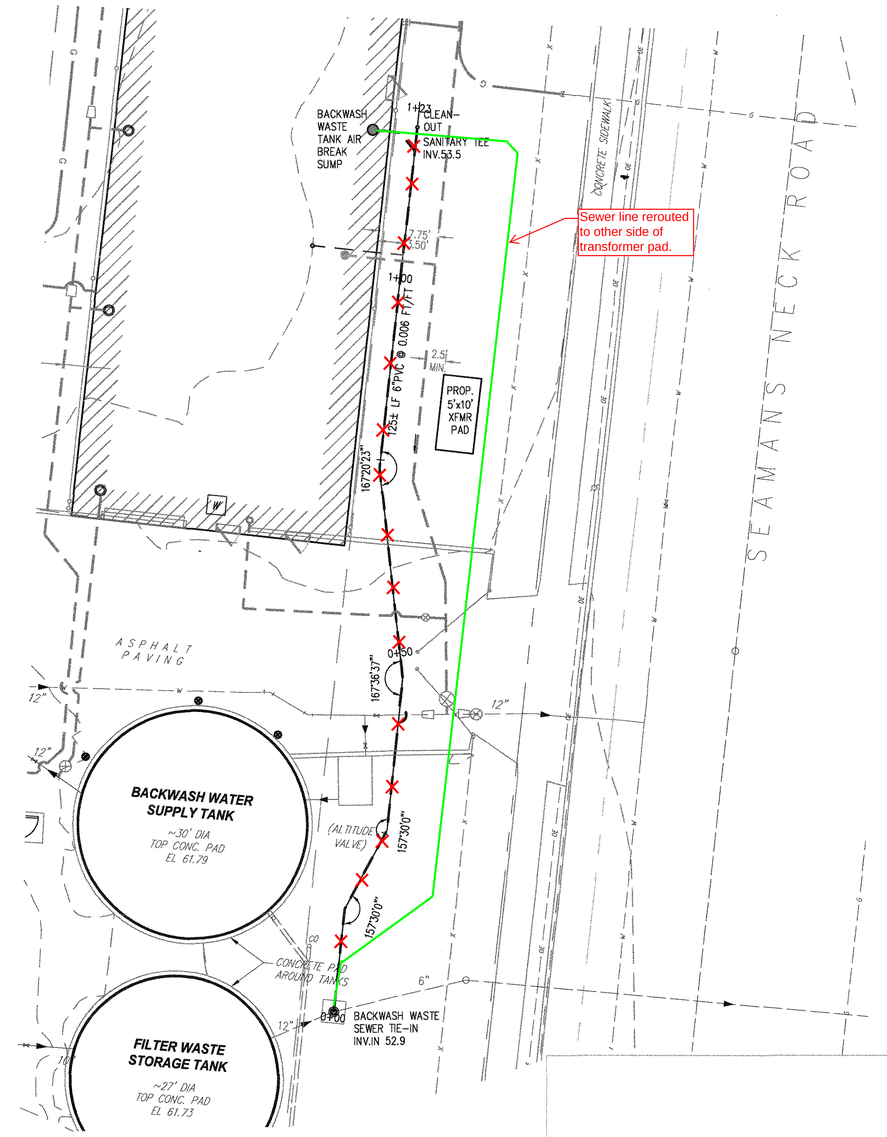

1 / – PLAN: **GRAVITY SEWER - PLAN VIEW**
1"=10'

WASTE WATER PIPING SHALL BE WATER WORK GRADE PIPING MEETING AWWA STANDARDS OF CONSTRUCTION TESTING AND BE PRESSURE TESTED TO 150 PSI.

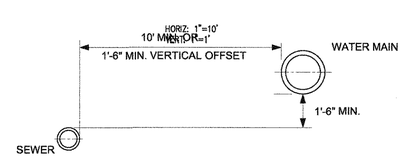

2 / – DETAIL: **WATER + SEWER PARALLEL INSTALLATION REQUIREMENTS**
NOT TO SCALE

NOTES:
1. ALL U/G WATER LINES SHALL BE MIN. 3'-6" BELOW GRADE.
2. IF CROSSING WATER MAIN, ENCASE BACKWASH WASTE LINE IN CONCRETE 5' ON EACH SIDE OF CROSSING.

UNAUTHORIZED ALTERATION OR ADDITION TO THIS PLAN IS A VIOLATION OF SECTION 7209 OF THE NEW YORK STATE EDUCATION LAW. UNLESS THE PERSON IS ACTING UNDER THE DIRECTION OF A LICENSED PROFESSIONAL ENGINEER. ANY PLAN ALTERATIONS BY ANOTHER ENGINEER MUST BE MARKED AS SUCH, INCLUDING THE SIGNATURE AND SEAL OF THE ALTERING ENGINEER.

NASSAU COUNTY DEPARTMENT OF HEALTH
DIVISION OF ENVIRONMENTAL HEALTH
These plans are hereby approved
SHEET 12 OF 69
See first sheet hereof for date and signature

CAUTION: IF SHEET IS LESS THAN 34"x22" USE GRAPHIC SCALE

SYM	DESCRIPTION	DATE	APPR
1	APPROVAL SUBMISSION, REV 1	6/11/12	-

NAVFAC

STATE OF NEW YORK — JAMES DANIEL BRAZIE — 080336 — LICENSED PROFESSIONAL ENGINEER

DES	CBG	DR	SNL
REVIEWED BY			HKM
PM/DM			
CHIEF ENG/ARCH			HKM

DEPARTMENT OF THE NAVY
NAVAL FACILITIES ENGINEERING COMMAND ~ MID-ATLANTIC
NAVAL STATION - NORFOLK, VIRGINIA
NORTHEAST IPT
AQUA NY
NASSAU COUNTY, NEW YORK
MODIFICATIONS TO WATER TREATMENT FACILITY
GRAVITY SEWER PROFILIE

CODE ID. NO. 80091	SIZE D
SCALE:	1"=10'-0"
MAXIMO NO. N62470-08-D-1001	
JOB ORDER NO. WE-25	
SPEC. NO.	
CONSTR. CONTR. NO. 112G02223	
NAVFAC DRAWING NO.	
SHEET	OF --
C-8	

NOV 0 2012 12

K:\112G02223 - Aqua Bethpage-Navy Project - H. Mito\Drawings\Civil\02223_Section.dwg 06/07/2012 10:01

Attachment 1 of RFI-024A: Sewer line reroute accepted per response to this RFI dated 11/04/2013.

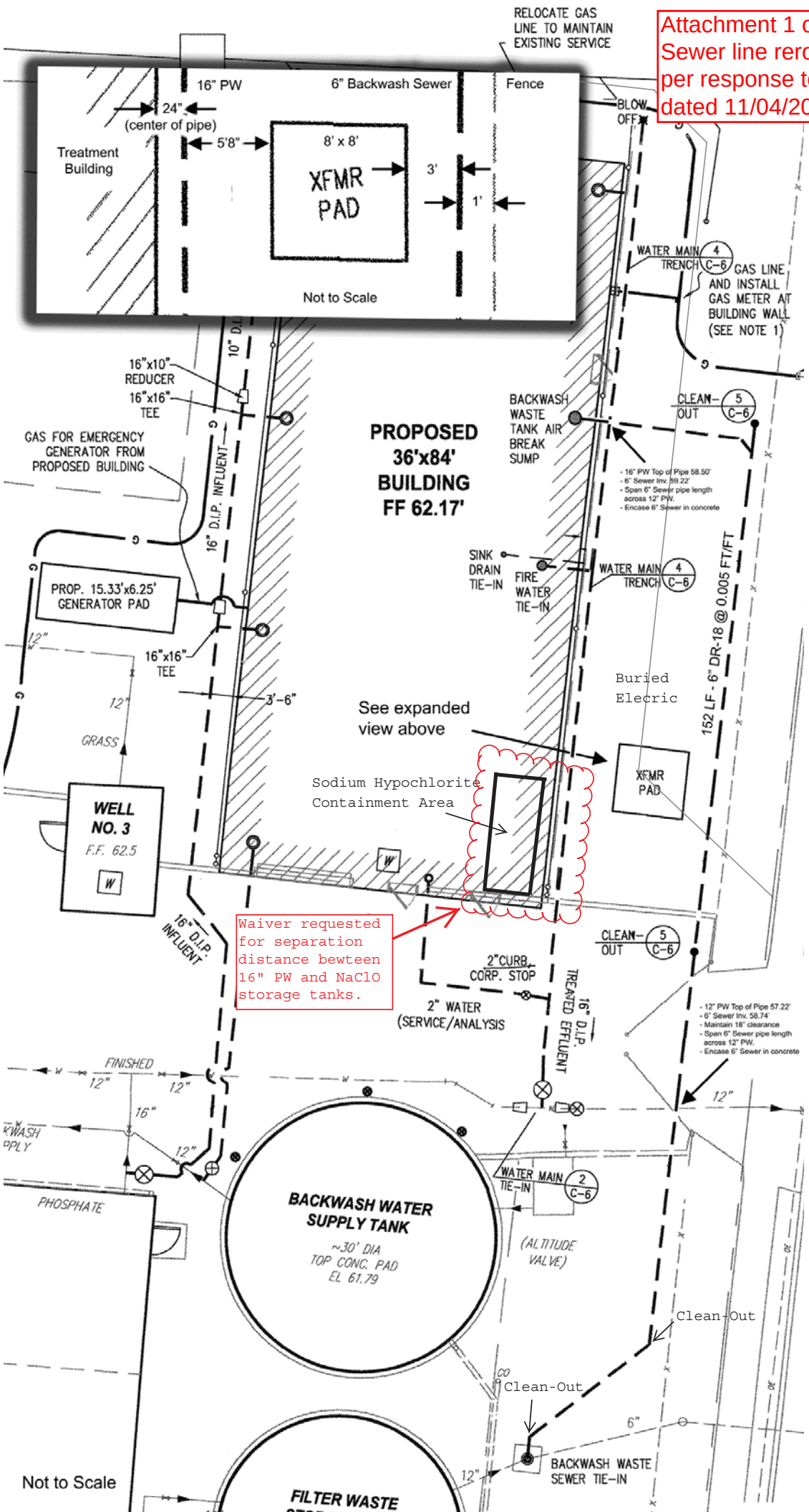

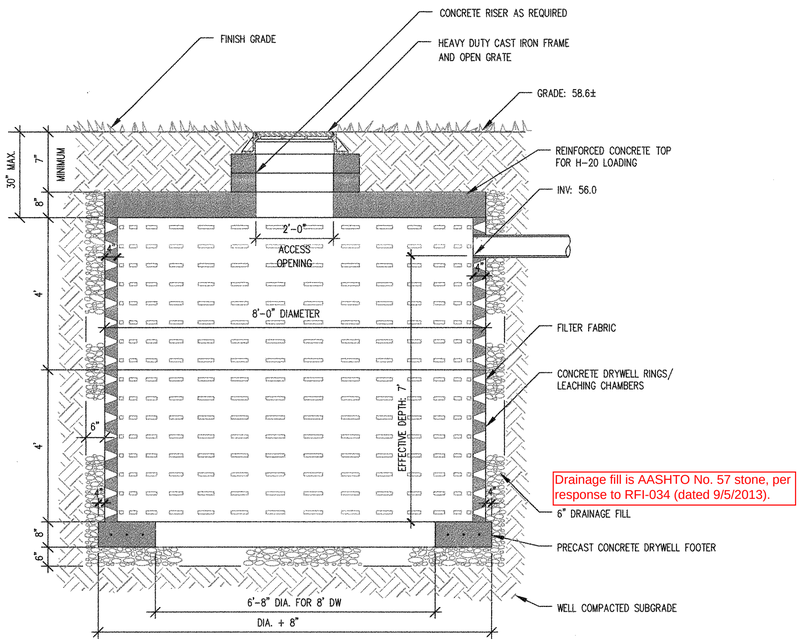

Drainage fill is AASHTO No. 57 stone, per response to RFI-034 (dated 9/5/2013).

1 C-3 DETAIL: STORMWATER DRYWELL

NOT TO SCALE

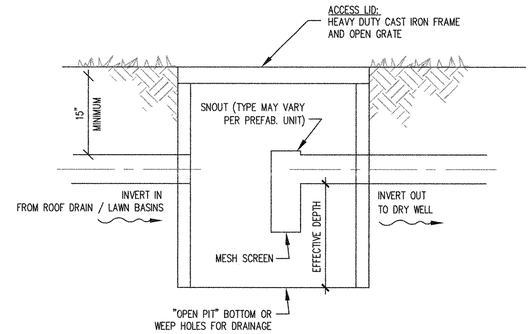

STORMWATER DEBRIS TRAP NOTES:

- STORMWATER PRE-TREATMENT SUMP REQUIREMENT SIZE IS 85 C.F.
- SIZE SHOWN ON PLAN IS 5'x'5' SQUARE x 3.5' EFFECTIVE DEPTH. SIZE AND SHAPE MAY VARY AS LONG AS THE TRAP BOTTOM IS EASILY ACCESSIBLE FOR ROUTINE CLEANING.
- MATERIAL MAY BE CAST-IN-PLACE CONCRETE, PRE-CAST CONCRETE, OR PRE-FABRICATED HDPE.
- ALL PARTS OF THE UNIT SHALL BE ABLE TO WITHSTAND AN H-20 LOADING.
- FOR CAST-IN-PLACE UNITS, "INVERT IN" MUST BE HIGHER THAN "INVERT OUT".
- FOR PRE-CAST OR PRE-FABRICATED UNITS, SHOP DRAWINGS AND CUT SHEETS SHALL BE SUBMITTED TO THE DESIGN ENGINEER FOR APPROVAL.

2 C-3 DETAIL: DEBRIS TRAP FOR DRYWELL

NOT TO SCALE

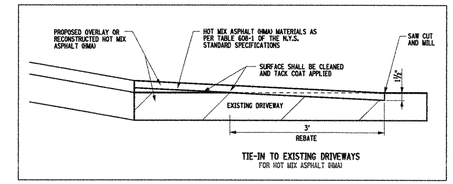

3 C-3 SECTION: ASPHALT OVERLAY

NOT TO SCALE

SOURCE: N.Y. STATE DOT STANDARD SHEETS
SHEET 608-03, SEE SHEET FOR ASPHALT OVERLAY NOTES

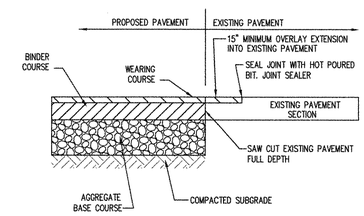

4 C-3 SECTION: BUTT JOINT (RECONSTRUCTION)

NOT TO SCALE

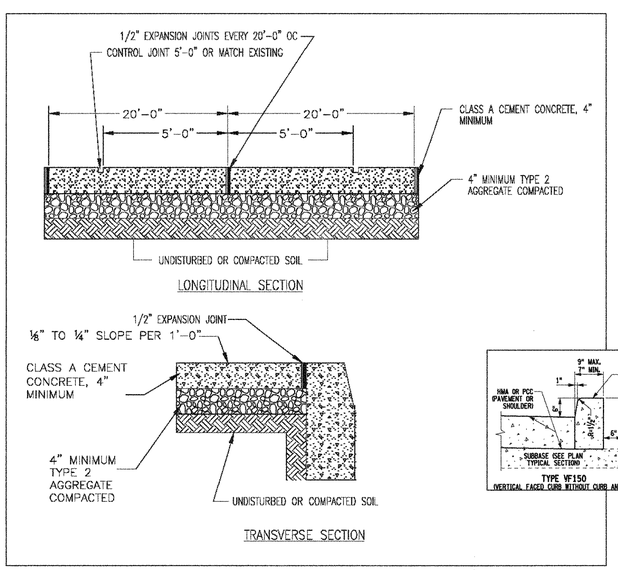

5 C-3 DETAIL: CONCRETE CURB (TYPE VF150) AND SIDEWALK

NOT TO SCALE

SOURCE: N.Y. STATE DOT STANDARD SHEETS
SHEET 609-03 AND SPECIFICATION SECTION 608

NASSAU COUNTY DEPARTMENT OF HEALTH
DIVISION OF ENVIRONMENTAL HEALTH
These plans are hereby approved
SHEET 13 OF 69
See first sheet hereof for date and signature

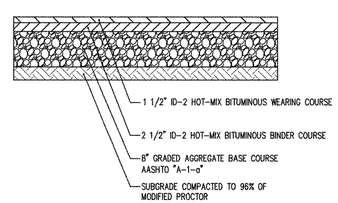

CONSTRUCTION NOTES:

1. SEE BUTT-JOINT OR OVERLAY DETAILS TO MATCH NEW PAVEMENT WITH EXISTING.
2. ALL ASPHALT PAVEMENT MATERIALS SHALL CONFORM TO NYS DOT SPECIFICATIONS.

6 C-3 SECTION: ASPHALT DRIVEWAY (MINOR COMMERCIAL)

NOT TO SCALE

SOURCE: N.Y. STATE DEPARTMENT OF TRANSPORTATION STANDARD SHEETS
SHEET 608-03, TABLE 3

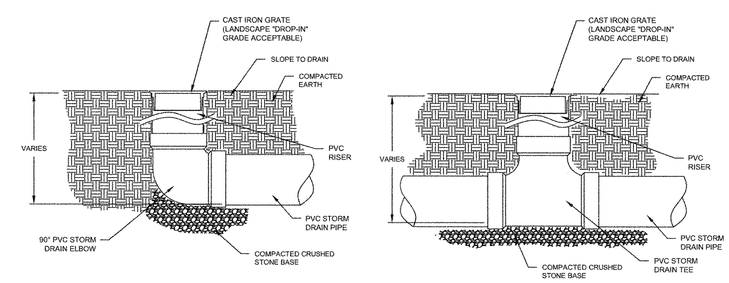

7 C-3 DETAIL: LAWN BASIN

NOT TO SCALE

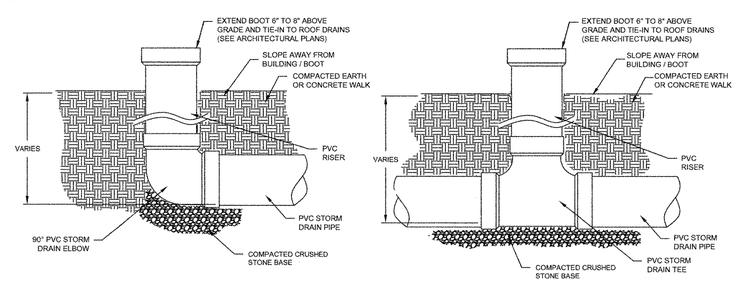

8 C-3 DETAIL: ROOF DRAIN TIE-IN

NOT TO SCALE

CAUTION: IF SHEET IS LESS THAN 34"x22" USE GRAPHIC SCALE

SYM	DESCRIPTION	DATE	APPR
	NASSAU COUNTY DEPT. OF HEALTH SUBMITTAL	9/6/2011	

NAVFAC

STATE OF NEW YORK — DANIEL BRANCH — 080336 — LICENSED PROFESSIONAL ENGINEER

DES	CSG	DR	CSG
REVIEWED BY		HKM	
PM/DM		DDB	
CHIEF ENG/ARCH		HKM	

DEPARTMENT OF THE NAVY
NAVAL FACILITIES ENGINEERING COMMAND
NORTHEAST IPT
AQUA NY

NAVAL FACILITIES ENGINEERING COMMAND ~ MID-ATLANTIC
NAVAL STATION - NORFOLK, VIRGINIA

NASSAU COUNTY, NEW YORK

MODIFICATIONS TO WATER TREATMENT FACILITY

SITE DETAILS

CODE ID. NO. 80091	SIZE D
SCALE:	NTS
MAXIMO NO. N62470-08-D-1001	-
JOB ORDER NO. WE-25	-
SPEC. NO.	-
CONSTR. CONTR. NO.	112G02223
NAVFAC DRAWING NO.	
SHEET	OF --

C-9

NOV 07 2012 /3

K:\112G02223 - Aqua Bethpage-Navy Project - H. Mifsud\Drawings\Civil\02223_Details.dwg 09/07/2011 09:46

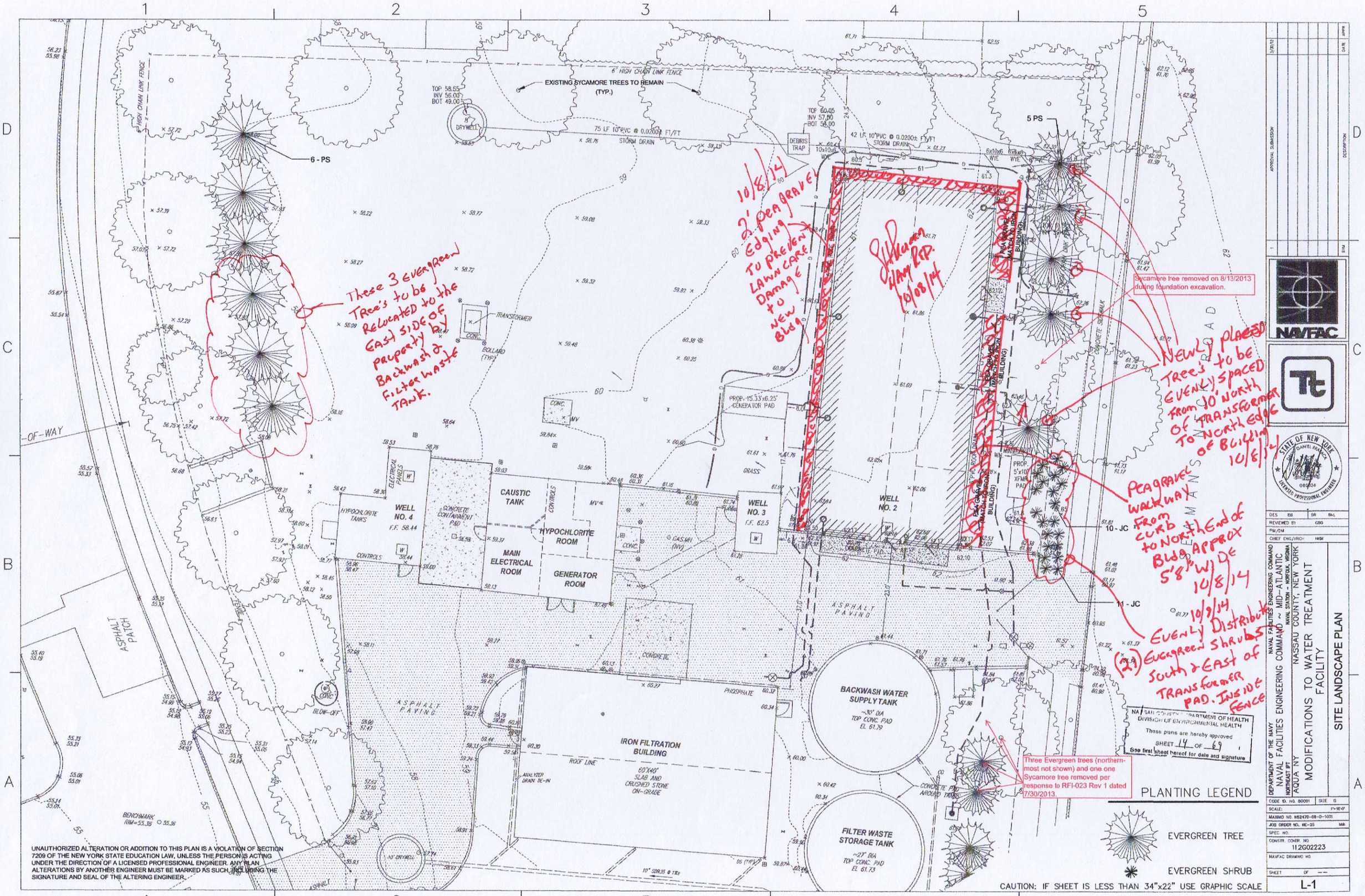

EXISTING SYCAMORE TREES TO REMAIN (TYP.)
6' HIGH CHAIN LINK FENCE
6 - PS
5 PS
10 - JC
11 - JC
WELL NO. 4
WELL NO. 3
WELL NO. 2
CAUSTIC TANK
HYPOCHLORITE ROOM
MAIN ELECTRICAL ROOM
GENERATOR ROOM
IRON FILTRATION BUILDING
BACKWASH WATER SUPPLY TANK
FILTER WASTE STORAGE TANK
ASPHALT PATCH
ASPHALT PAVING
PROP. 15.33'x6.25' GENERATOR PAD
TRANSFORMER
BOLLARD (TYP.)
DEBRIS TRAP
DRYWELL
PHOSPHATE
ROOF LINE
BENCHMARK RIM=55.36
10" DRYWELL
Sycamore tree removed on 8/13/2013 during foundation excavation.
Three Evergreen trees (northernmost not shown) and one one Sycamore tree removed per response to RFI-023 Rev 1 dated 7/30/2013.
These 3 Evergreen Tree's to be Relocated to the East side of property by Backwash & Filter waste Tank.
10/8/14 2' Pea gravel Edging to prevent Lawn care Damage to New Bldg
Newly placed Tree's to be evenly spaced from 10' North of Transformer to North edge of Building 10/8/14
Pea gravel walkway from curb to North End of Bldg Approx 5'8" wide 10/8/14
10/9/14 Evenly Distribute (21) Evergreen Shrubs South & East of Transformer Pad. Inside fence
NAVFAC
STATE OF NEW YORK
LICENSED PROFESSIONAL ENGINEER
NASSAU COUNTY DEPARTMENT OF HEALTH
DIVISION OF ENVIRONMENTAL HEALTH
These plans are hereby approved
SHEET 14 OF 69
See first sheet hereof for date and signature
PLANTING LEGEND
EVERGREEN TREE
EVERGREEN SHRUB
CAUTION: IF SHEET IS LESS THAN 34"x22" USE GRAPHIC SCALE
UNAUTHORIZED ALTERATION OR ADDITION TO THIS PLAN IS A VIOLATION OF SECTION 7209 OF THE NEW YORK STATE EDUCATION LAW, UNLESS THE PERSON IS ACTING UNDER THE DIRECTION OF A LICENSED PROFESSIONAL ENGINEER. ANY PLAN ALTERATIONS BY ANOTHER ENGINEER MUST BE MARKED AS SUCH, INCLUDING THE SIGNATURE AND SEAL OF THE ALTERING ENGINEER.
DEPARTMENT OF THE NAVY
NAVAL FACILITIES ENGINEERING COMMAND ~ MID-ATLANTIC
NAVAL STATION - NORFOLK, VIRGINIA
NORTHEAST IPT
AQUA NY
NASSAU COUNTY, NEW YORK
MODIFICATIONS TO WATER TREATMENT FACILITY
SITE LANDSCAPE PLAN
CODE ID. NO. 80091
SIZE D
SCALE: 1"=10'-0"
MAXIMO NO. N62470-08-D-1001
JOB ORDER NO. WE-25
SPEC. NO.
CONSTR. CONTR. NO. 112G02223
NAVFAC DRAWING NO.
SHEET OF --
L-1

14

PLANTING SCHEDULE – PACKAGE 'A'

KEY	QUANTITY	BOTANICAL NAME	COMMON NAME	SIZE AT PLANTING	ROOT	COMMENTS
PS	12	PINUS STROBUS 'FASTIGIATA'	SHEARED EASTERN WHITE PINE	8–10' FULL	B&B	UNIFORM SCREEN
JC	21	JUNIPERUS CONFERTA	SHORE JUNIPER	15–18"	CONT.	FULL

PLANTING REMOVAL SCHEDULE

KEY	QUANTITY	BOTANICAL NAME	COMMON NAME
PS	X	PINUS STROBUS 'FASTIGIATA'	SHEARED EASTERN WHITE PINE
PO	X	PLATANUS OCCIDENTALIS	AMERICAN SYCAMORE

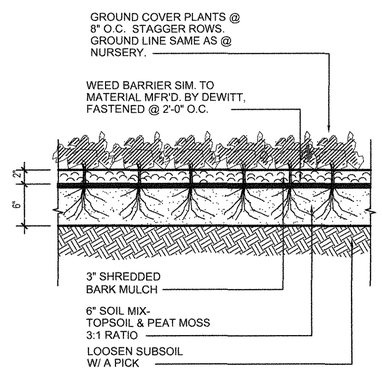

1 Ground Cover Planting Detail

1" = 1'-0"

2900-106

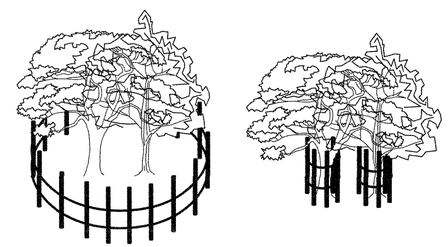

CORRECT
FENCING FOR TREE PROTECTION INSTALL FENCING AT EDGE OF TREE CANOPY DRIP LINE.

INCORRECT
FENCING FOR TREE PROTECTION

2 TREEPROTECTION

NTS

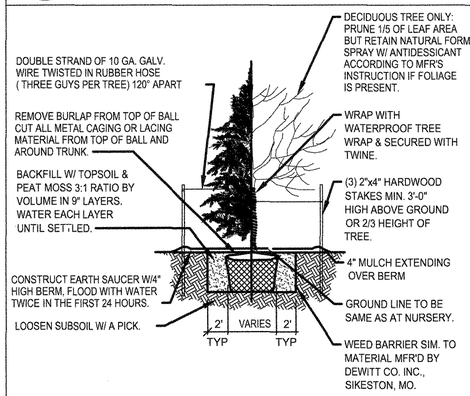

3 Tree Planting Detail

No Scale

2900-108

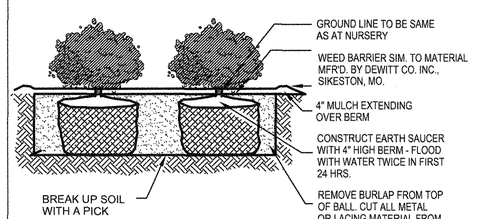

NOTE: PRUNE 1/5 OF LEAF AREA BUT RETAIN NATURAL FORM. SPRAY W/ ANTIDESSICANT ACCORDING TO MFGR'S INSTRUCTION IF FOLIAGE IS PRESENT.

NOTE: FOR MASS PLANTINGS, EXCAVATE ENTIRE BED & BACKFILL W/ ABOVE MATERIAL

4 Shrub Mass Planting Detail

No Scale

2900-107

PLANTING NOTES

1. CONTRACTOR IS RESPONSIBLE FOR COMPLETE COVERAGE OF PLANTING BEDS AND TREE RINGS AT SPACING SHOWN.
2. PROPOSED PLANTING MATERIALS ARE SUBJECT TO THE APPROVAL OF THE ARCHITECT BEFORE, DURING AND AFTER INSTALLATION.
3. PLANT MATERIALS TO BE COMMERCIALLY GROWN AND BUD HARDY WITHIN USDA HARDINESS ZONE OF THE PROJECT.
4. PLANTING AREAS MUST BE NEATLY CUT OR EDGED AT BED LINE AND COMPLETELY MULCHED WITHIN BEDLINE WITH 4" CONTINUOUS SETTLED DEPTH OF MULCH SPECIFIED.
5. STAKE LOCATIONS OF INDIVIDUAL TREES, SHRUBS AND PLANT BEDLINES. NOTIFY ARCHITECT A MINIMUM OF ONE WEEK PRIOR TO PLANTING. STAKED LOCATIONS TO BE APPROVED BY ARCHITECT PRIOR TO INSTALLATION, EXVACATION OF PITS OR PREPARATION OF BEDS.
6. IF LOCATION OF TREES ARE SHOWN WITH ROOT BALL WITHIN FIVE FEET OF UNDERGROUND UTILITIES, TREES ARE WITHIN TWENTY FEET OF OVERHEAD WIRES OR OTHER OBSTRUCTION IS ENCOUNTERED, INFORM ARCHITECT AND DO NOT PROCEED WITH PLANTING UNTIL ARCHITECT APPROVES LOCATION ADJUSTMENTS.
7. LEGIBLY TAG PLANTS WITH NOMENCLATURE FROM "STANDARDIZED PLANT NAMES" LISTING BY AMERICAN JOINT COMMITTEE OF HORTICULTURE. RETAIN TAGS ON PLANT MATERIALS AND SHIPPING RECEIPTS FOR ARCHITECT REVIEW. TAGS TO BE REMOVED ONLY AFTER ARCHITECT'S FINAL REVIEW OF PLANT MATERIALS. PLANT MATERIALS TO BE TRUE TO NAME, FORM, SIZE AND LOCATION INDICATED ON DRAWINGS AND SPECIFIED.
8. FULLY MAINTAIN PLANTING AND LAWN AREAS INCLUDING, BUT NOT LIMITED TO: STAKING, WATERING, SPRAYING, PRUNING, MULCHING AND FERTILIZING UNTIL THE PROJECT IS FINAL REVIEWED AND ACCEPTED BY ARCHITECT.
9. PLANT MATERIAL WHICH DIES, TURNS BROWN, DEFOLIATES OR IS DEEMED UNSATISFACTORY BY ARCHITECT PRIOR TO ACCEPTANCE OF THE WORK SHALL BE PROMPTLY REMOVED FROM THE SITE AND REPLACED WITH MATERIAL OF THE SAME SPECIES, QUANTITY AND SIZE UNLESS A SUBSTITUTION IS APPROVED BY THE ARCHITECT.

NASSAU COUNTY DEPARTMENT OF HEALTH
DIVISION OF ENVIRONMENTAL HEALTH
These plans are hereby approved
SHEET 15 OF 69
see first sheet hereof for date and signature

UNAUTHORIZED ALTERATION OR ADDITION TO THIS PLAN IS A VIOLATION OF SECTION 7209 OF THE NEW YORK STATE EDUCATION LAW, UNLESS THE PERSON IS ACTING UNDER THE DIRECTION OF A LICENSED PROFESSIONAL ENGINEER. ANY PLAN ALTERATIONS BY ANOTHER ENGINEER MUST BE MARKED AS SUCH, INCLUDING THE SIGNATURE AND SEAL OF THE ALTERING ENGINEER.

CAUTION: IF SHEET IS LESS THAN 34"x22" USE GRAPHIC SCALE

SYM	DESCRIPTION	DATE	APPR
-	NASSAU COUNTY DEPT. OF HEALTH SUBMITTAL	8/9/2011	-

NAVFAC

STATE OF NEW YORK · DAVID DANIEL BRAYKAK · 080836 · LICENSED PROFESSIONAL ENGINEER

DES ES	DR SNL
REVIEWED BY	CSG
PM/DM	DDB
CHIEF ENG/ARCH	HKM

DEPARTMENT OF THE NAVY
NAVAL FACILITIES ENGINEERING COMMAND ~ MID-ATLANTIC
NORTHEAST BY NAVAL STATION – NORFOLK, VIRGINIA
AQUA NY NASSAU COUNTY, NEW YORK
MODIFICATIONS TO WATER TREATMENT FACILITY
SITE LANDSCAPE PLAN DETAILS

CODE ID. NO. 80091 | SIZE D
SCALE: 1"=10'-0"
MAXIMO NO. N62470-08-0-1001
JOB ORDER NO. WE-25
SPEC. NO.
CONSTR. CONTR. NO. 112002223
NAVFAC DRAWING NO.
SHEET OF ---
L-2

K:\112002223 - Aqua Bethpage-Navy Project - H. Mitsi\Drawings\Civil\02223_Lscape.dwg 09/09/2011 10:02

NOV 07 2012 15

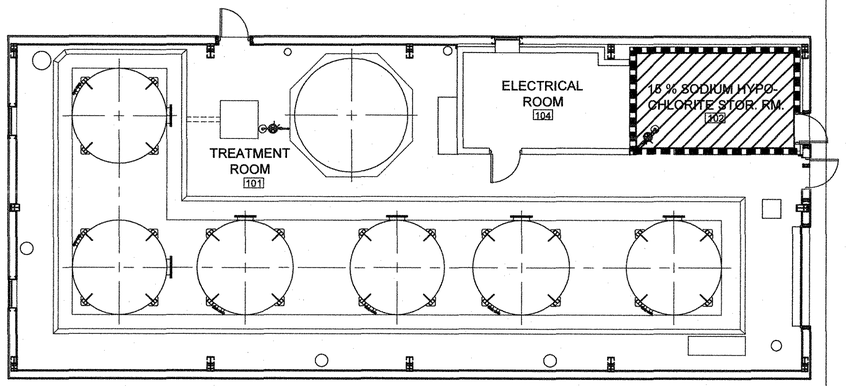

SYMBOL KEY

2 HR RATED WALL

2 HR RATED CEILING

NOTES:

1. SEE ARCH FLOOR PLAN A1 FOR FIRE EXTINGUISHER LOCATIONS
2. SEE ARCH FLOOR PLAN A1 FOR FIRE RATED WALL. SEE ARCH SECTION SHEET A-3 FOR CEILNG ASSEMBLY INFO.

CODE PLAN

SCALE: N.T.S.

PLAN NORTH

UNAUTHORIZED ALTERATION OR ADDITION TO THIS PLAN IS A VIOLATION OF SECTION 7209 OF THE NEW YORK STATE EDUCATION LAW, UNLESS THE PERSON IS ACTING UNDER THE DIRECTION OF A LICENSED PROFESSIONAL ENGINEER. ANY PLAN ALTERATIONS BY ANOTHER ENGINEER MUST BE MARKED AS SUCH, INCLUDING THE SIGNATURE AND SEAL OF THE ALTERING ENGINEER.

CODE REVIEW

A. BUILDING BASICS

THIS PROJECT CONSISTS OF A NEW, ONE-STORY BUILDING APPROXIMATELY 3,024 SQUARE FEET LOCATED ON THE PROPERTY OF AN EXISTING WATER TREATMENT FACILITY. THE BUILDING WILL CONSIST OF A TREATMENT ROOM, WHICH HOUSES WATER TREATMENT/FILTERING EQUIPMENT, A SODIUM HYPOCHLORITE STORAGE ROOM, A PHOSPHATE TANK ~~(AREA)~~ AND AN ELECTRICAL ROOM. THERE ARE NO OCCUPIED OFFICE SPACES IN THE PROPOSED BUILDING.

NOTE: SODIUM HYPOCHLORITE IS A STRONG OXIDIZER. OXIDATION REACTIONS ARE CORROSIVE, SOLUTIONS BURN SKIN AND CAUSE EYE DAMAGE, PARTICULARLY WHEN USED IN CONCENTRATED FORMS. HOWEVER, AS RECOGNIZED BY THE NFPA, ONLY SOLUTIONS CONTAINING MORE THAN 40% SODIUM HYPOCHLORITE BY WEIGHT ARE CONSIDERED HARARDOUS OXIDIZERS. SOLUTIONS LESS THAN 40% ARE CLASSIFIED AS A MODERATE OXIDIZING HAZARD (NFPA 430, 2000).

B. REFERENCED CODE

2007 EDITION OF THE BUILDING CODE OF NEW YORK STATE
2007 EDITION OF THE FIRE AND PROPERTY MAINTENANCE CODE

C. USE AND OCCUPANCY

THIS BUILDING IS CONSIDERED A USE GROUP F-2 IN ACCORDANCE WITH SECTION 306.3. THE F-2 CATEGORY COVERS USES THAT INVOLVE THE FABRICATION OR MANUFACTURE OF NON-COMBUSTIBLE MATERIALS. THE MATERIALS AND PROCESSES USED FOR THE TREATMENT OF WATER DO NOT INVOLVE A SIGNIFICANT FIRE HAZARD AND THERFORE FALL UNDER THE F-2 CATEGORY.

STORAGE OF THE SODIUM HYPOCHLORITE IS A CLASS II MODERATE OXIDIZER. AS A RESULT, ITS USE CREATES A ACCESSORY CLASSIFICATION OF H-3. STORAGE QUANTITY NOT TO EXCEED TABLE 307.1.(1), NOTES D AND E, 750 GALLONS. PROPOSED STORAGE IS 495 GALLONS. ROOM TO BE PROVIDED WITH A 2 HOUR FIRE SEPERATION RATING BASED UPON TABLE 302.3.2.

D. HEIGHT AND AREA

THIS BUILDING IS A PRE-FABRICATED METAL FRAME BUILDING. THE CONSTRUCTION TYPE OF A PRE-FABRICATED METAL BUILDING IS TYPE IIB. THE HEIGHT AND AREA OF THIS BUILDING COMPLY WITH THE REQUIREMENTS FOR A TYPE IIB BUILDING IN ACCORDANCE WITH TABLE 503.

IN ACCORDANCE WITH TABLE 601, THERE ARE NO FIRE RESISTANCE RATING REQUIREMENTS ON THE STRUCTURAL FRAME, INTERIOR AND EXTERIOR BEARING AND NON-BEARING WALLS, FLOOR AND ROOF CONSTRUCTION. TABLE 602 ADDRESSES FIRE RATINGS BASED ON SEPERATION DISTANCE. THERE NO REQUIREMENTS IN TABLE 602 THAT APPLY TO THIS BUILDING.

E. FIRE PROTECTION SYSTEMS

AN AUTOMATIC FIRE SUPPRESSION SYSTEM IS REQUIRED DUE TO THE AMOUNT OF CLASS II OXIDIZER BEING STORED.

NOTE: IFC 4004.1.4 IS NOT APPLICABLE BECAUSE THE QUANTITY OF SODIUM HYPOCHLORITE IS WITHIN THE LIMITS OF IFC TABLE 2703.1.1(1) AND IBC 307.1(1). IN ORDER TO STAY WITHIN THE ALLOWABLE LIMIT, THE BUILDING NEEDS THE SPRINKLER AND STORAGE CREDITS PROVIDED BY NOTES D AND E IN EACH TABLE.

A MANUAL FIRE ALARM SYSTEM IS ONLY REQUIRED IN USE GROUP F BUILDINGS WHEN THE OCCUPANT LOAD EXCEEDS 500. THAT IS NOT THE CASE IN THIS BUILDING; THEREFORE, NO MANUAL FIRE ALARM SYSTEM IS REQUIRED. HOWEVER, THE H-3 PORTION OF THE BUILDING DOES HAVE A REQUIREMENT FOR AN AUTOMATIC FIRE DETECTION SYSTEM. SEE H-3 REVIEW BELOW FOR MORE INFORMATION.

PORTABLE FIRE EXTINGUISHERS IN ACCORDANCE WITH THE 2007 FIRE CODE OF NEW YORK STATE ARE REQUIRED. THE EXTINGUISHERS SHALL BE LOCATED IN AREAS WHERE FLAMMABLE OR COMBUSTIBLE LIQUIDS ARE STORED, USED OR DISPENSED. THEY SHALL ALSO BE LOCATED IN CONSPICUOUS LOCATIONS WHERE THEY WILL BE READILY AVAILABLE ALONG NORMAL PATHS OF TRAVEL. FIRE EXTINGUISHERS SHALL BE UNOBSTRUCTED AND UNOBSCURED FROM VIEW. HAND HELD EXTINGUISHERS, NOT HOUSED IN CABINETS, SHALL BE HUNG SO THAT THE TOP IS NOT MORE THAN FIVE FEET ABOVE THE FLOOR LEVEL.

IN THIS BUILDING, 2A 40BC FIRE EXTINGUISHERS SHALL BE PLACED AT EACH EXIT AND ALSO AT THE ENTRANCE TO THE 15% SODIUM HYPO-CHLORITE STORAGE ROOM.

F. OCCUPANT LOAD

ALTHOUGH OPERATIONALLY THERE WILL BE NO OCCUPIED SPACES IN THE BUILDING, FOR THE PURPOSES OF EGRESS SIZING, ETC., THE OCCUPANT LOAD MUST BE CALCULATED. IN THIS BUILDING, THE OCCUPANT LOAD IS 30. (3,024/100 = 30).

G. MEANS OF EGRESS

THE MEANS OF EGRESS MUST BE ILLUMINATED AT ALL TIMES THE BUILDING IS OCCUPIED. THE LEVEL OF ILLUMINATION IS 1 FOOT-CANDLE AT THE FLOOR LEVEL IN ACCORDANCE WITH SECTION 1006.1.

EMERGENCY POWER (SECTION 1006.3)

IN THE EVENT OF POWER FAILURE, EMERGENCY LIGHTING SHALL BE PROVIDED TO ILLUMINATE EXIT ACCESS CORRIDORS, PASSAGEWAYS AND AISLES, INTERIOR EXIT DISCHARGE ELEMENTS AND THAT PORTION OF THE EXIT DISCHARGE IMMEDIATELY ADJACENT TO THE EXIT DISCHARGE DOORWAY.

DOOR SIZE (SECTION 1008)

THE MINIMUM WIDTH OF EACH DOOR SHALL BE SUFFICIENT FOR THE OCCUPANT LOAD AND SHALL HAVE A CLEAR WIDTH OPENING OF AT LEAST 32 INCHES.

TRAVEL DISTANCES (SECTION 1015)

THE TRAVEL DISTANCE TO AN EXIT SHALL NOT EXCEED 400 FEET IN A USE GROUP F-2, SPRINKLERED BUILDING. HOWEVER, THE TRAVEL DISTANCE FOR A USE GROUP H-3 IS 150 FEET. BUILDING COMPLIES WITH BOTH.

DEAD END CORRIDORS (SECTION 1016.3, EXCEPTION 2)

DEAD END CORRIDORS SHALL NOT EXCEED 50 FEET IN LENGTH.

NUMBER OF EXITS (SECTION 1018)

THE NUMBER OF EXITS REQUIRED IN THIS BUILDING IS TWO. THE H-3 CATEGORY WILL NOT PERMIT THE USE OF A SINGLE EXIT.

H. USE GROUP H-3 REQUIREMENTS

1. THE FACILITY IS STORING 495 GALLONS OF 15% SOLUTION OF SODIUM HYPOCHLORITE IN SINGLE WALL TANKS, WITH SECONDARY CONTAINMENT. THIS AMOUNT IS WITHIN LIMITS OF TABLE 307.7(1) FOR CLASS 2 OXIDIZERS USING TABLE NOTES D AND E. CLASSES OF OXIDIZERS ARE CLASSIFIED IN ACCORDANCE WITH NFPA 430. AS A RESULT, THIS IS A MIXED OCCUPANCY F-2 AND H-3.

2. BASED UPON TABLE 302.3.2, THE SODIUM HYPOCHLORITE STORAGE ROOM SHALL BE SEPARATED FROM THE F-2 OCCUPANCY BY A TWO-HOUR FIRE DIVISION. ALL OPENINGS MUST BE PROTECTED WITH A 1 ½ HOUR FIRE DOOR ASSEMBLY. DOORS SHALL HAVE PANIC HARDWARE ON THE EGRESS SIDE AND BE OF A SIDE HINGED TYPE.

3. THE STORAGE ROOM SHALL BE A SINGLE CONTROL AREA PER 414.2 BECAUSE STORAGE AMOUNTS ARE LESS THAN THAT PERMITTED BY TABLE 414.2.2 FOR A SINGLE CONTROL AREA.

4. FLOORS ARE CONCRETE ON EARTH. THIS MEETS THE REQUIREMENTS FOR FLOORS UNDER 414.2.3.

5. STORAGE ROOMS MUST HAVE VENTILATION IN ACCORDANCE WITH 414.3 AND THE IFC.

6. EXPLOSION CONTROL IS NOT REQUIRED BECAUSE OXIDIZER IS NOT A CLASS 4 OXIDIZER AS PER TABLE 414.5.1.

7. AN AUTOMATIC FIRE DETECTION SYSTEM SHALL BE PROVIDED THROUGH OUT THE SPACE IN ACCORDANCE WITH IBC SECTION 907.2. SMOKE DETECTION SHALL BE PROVIDED IN THE STORAGE ROOM PER IFC SECTION 4004.1.6.

8. STANDBY OR EMERGENCY POWER SHALL BE PROVIDED FOR VENTILATION AND FIRE DETECTION SYSTEMS AS REQUIRED BY 414.5.4.

9. SPILL CONTROL, DRAINAGE AND CONTAINMENT SHALL BE PROVIDED FOR THE STORAGE ROOM TO CONTAIN THE STORED MATERIAL AND ALL FIRE PROTECTION WATER DISCHARGE. METHODS OF SPILL CONTROL SHALL BE IN ACCORDANCE WITH THE IFC SECTION 2704.

10. AN EMERGENCY ALARM SYSTEM SHALL BE PROVIDED IN ACCORDANCE WITH 414.7. SPECIFICALLY, 414.7.1 AND 414.7.3.

11. SEE IFC TABLE 4004.1.7(2) FOR STORAGE ARRANGEMENT AND LIMITATIONS.

NASSAU COUNTY DEPARTMENT OF HEALTH
DIVISION OF ENVIRONMENTAL HEALTH
These plans are hereby approved
SHEET 16 OF 69
See first sheet hereof for date and signature

CAUTION: IF SHEET IS LESS THAN 34"x22" USE GRAPHIC SCALE

SYM	DESCRIPTION	DATE	APPR
-	APPROVAL SUBMISSION	3/30/12	-

NAVFAC

REGISTERED ARCHITECT DOMINIQUE BERNIER 020213 STATE OF NEW YORK

DES MTR	DR MTR
REVIEWED BY	CED
PM/DM	
CHIEF ENG/ARCH	MDB

DEPARTMENT OF THE NAVY
NAVAL FACILITIES ENGINEERING COMMAND
NORTHEAST IPT
AQUA NY

NAVAL FACILITIES ENGINEERING COMMAND ~ MID-ATLANTIC
NAVAL STATION - NORFOLK, VIRGINIA

NASSAU COUNTY, NEW YORK
MODIFICATIONS TO WATER TREATMENT FACILITY

CODE PLAN

CODE ID. NO. 80091	SIZE D
SCALE:	NTS
MAXIMO NO. N62470-08-D-1001	
JOB ORDER NO. WE-25	
SPEC. NO.	
CONSTR. CONTR. NO. 112G02223	
NAVFAC DRAWING NO.	
SHEET	OF --

CP-1

NOV 0 2 2012

16

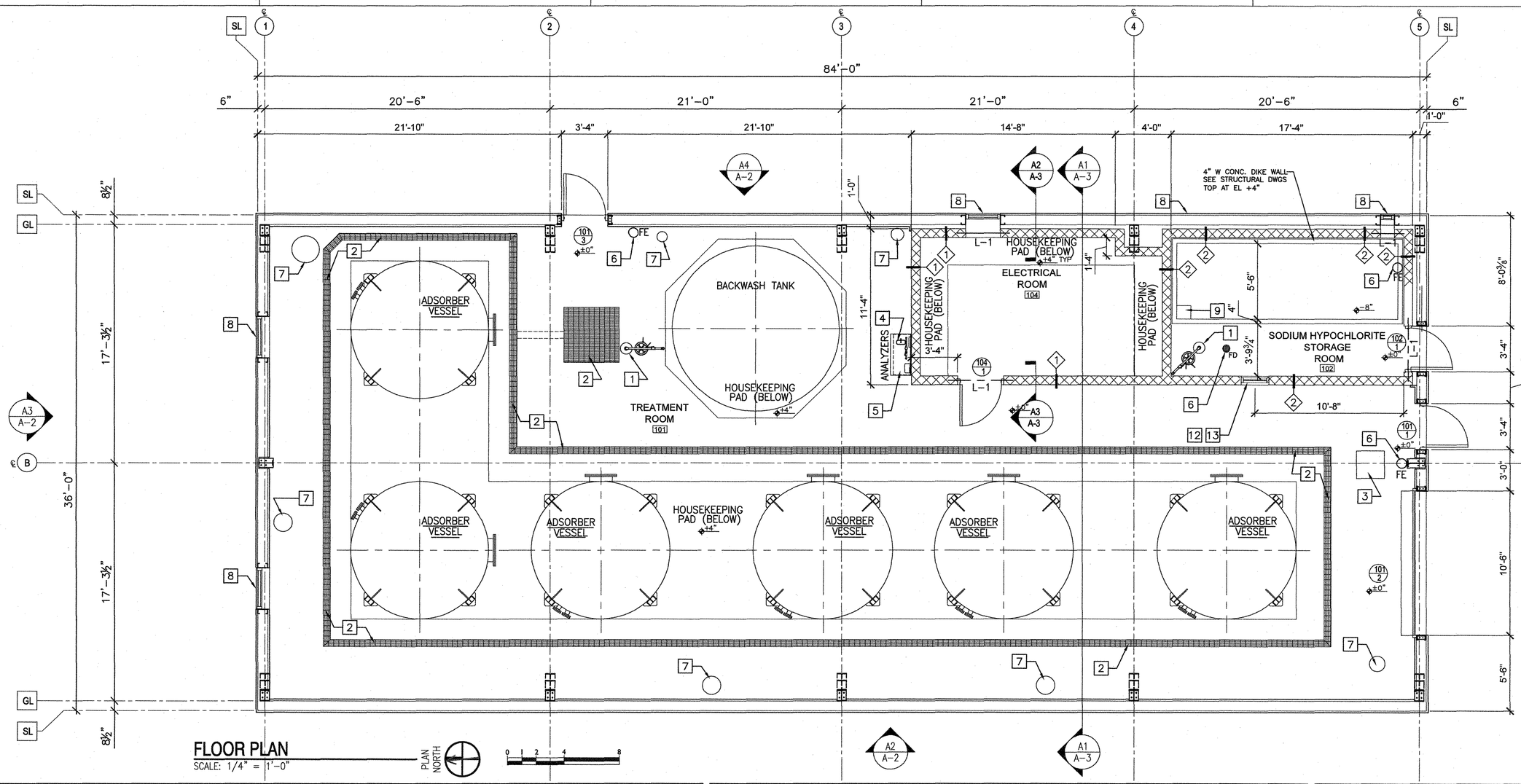

FLOOR PLAN

SCALE: 1/4" = 1'-0"

GENERAL NOTES:

1. MAINTAIN MINIMUM ADA PUSH/PULL REQUIRED CLEARANCES TO OBSTRUCTIONS (IE. WALLS, COLUMN WRAPS, ETC.). MAINTAIN THE FOLLOWING MINIMUM CLEARANCES FOR ALL SWING DOORS:
   - LATCH JAMB ON PULL SIDE OF DOOR = 1'-6"
   - LATCH JAMB ON PUSH SIDE OF DOOR = 1'-0" MIN.
2. SEE STRUCTURAL DRAWINGS FOR GROUTING & REINFORCING REQUIREMENTS.
3. VERIFY ALL EXG CONDITIONS AND DIMENSIONS IN THE FIELD, INCLUDING THOSE MARKED AS "+/-" AND "VIF". IMMEDIATELY NOTIFY THE ARCHITECT OF ANY DISCREPANCIES PRIOR TO COMMENCING ANY WORK IN AFFECTED AREA(S).
4. DO NOT SCALE DWGS TO OBTAIN DIMENSIONS. REFER TO STRU AND ARCH DWGS FOR DIMENSIONS REQUIRED. CRITICAL DIMENSIONS NOT FOUND SHOULD BE FIELD VERIFIED OR OBTAINED FROM THE ARCHITECT. IMMEDIATELY NOTIFY THE ARCHITECT OF ANY DISCREPANCIES BETWEEN THE STRU AND ARCH DWGS.
5. NOTES ON ONE DWG OR DETAIL APPLY TO ALL SIM DWGS OR DETAILS.
6. DIMENSIONS ARE ACTUAL TAKEN FROM STRUCTURAL COMPONENTS. IE: FACE OF MASONRY, FACE OF METAL STUDS, ETC. TYP UNO. MASONRY DIMENSIONS ARE ACTUAL.
7. SEE STRU DWGS FOR SLAB, HOUSEKEEPING PADS, FOUNDATION, SUBSURFACE DRAINAGE INFORMATION AND DETAILS.
8. TOP OF SLAB ELEVATION 0'-0" ON ARCH DWGS CORRESPONDS TO DATUM ELEVATION 62.17' ON CIVIL DWGS.
9. APPLY CONTINUOUS JOINT SEALANT WHERE INDICATED ON DWGS AND AT ALL JOINTS BETWEEN DISSIMILAR MATERIALS.
10. ALL WORK IS TO BE IN STRICT COMPLIANCE WITH ALL FEDERAL, STATE AND LOCAL LAWS AND CODES WHICH APPLY TO THIS USE AND TO GENERALLY ACCEPTED CONSTRUCTION TRADE PRACTICES.
11. PAINT ALL EXPOSED PIPING, CONDUIT AND MECHANICAL EQUIPMENT IN AREAS NOTED TO BE PAINTED.
12. PROVIDE FIRE EXTINGUISHERS (FE) AS LOCATED ON FLOOR PLAN AND AS REQUIRED BY AUTHORITIES HAVING JURISDICTION.
13. SEE FLOOR PLAN ON THIS SHEET FOR MASONRY LINTEL LOCATIONS, NOTED AS L-#. SEE STRUCTURAL DRAWINGS FOR LINTEL SCHEDULE AND ADDITIONAL INFORMATION.
14. SEE PLUMBING DRAWINGS FOR ADDITIONAL FLOOR DRAIN LOCATIONS AND INFORMATION.
15. SEE MECHANICAL AND STRUCTURAL DRAWINGS FOR ADDITIONAL INFORMATION ON HOUSEKEEPING PADS.
16. NOT ALL LOUVERS ARE SHOWN ON FLOOR PLAN DUE TO HEIGHT DIFFERENCES. SEE HVAC DWGS FOR FINAL QUANITITY, LOCATIONS, AND SIZES. SEE STRUCTURAL DWGS FOR LINTEL SCHEDULE.

PLAN KEY NOTES: 4

1. SAFETY SHOWER AND EYE WASH-SEE MECH/PLUMB DWGS.
2. TRENCH DRAIN AND SUMP – SEE MECH/PLUMB AND STRU DWGS FOR FINAL SIZE, LOCATION AND ADDITIONAL INFORMATION.
3. EXISTING WELL NUMBER 2 ENCLOSURE – SEE STRUCTURAL DWGS. SEE MECH/PLUMB AND CIVIL DWGS FOR ACTUAL LOCATION A ND ADD'L INFORMATION.
4. SERVICE SINK – SEE MECH/PLUMB DWGS.
5. ANALIZERS AREA – SEE MECH DWGS. FOR ADDITIONAL INFORMATION.
6. FIRE EXTINGUISHERS (FE) SEE CODE PLAN CP-1.
7. PIPE DOWN THRU SLAB – SEE STRU AND MECH DWGS.
8. AIR INTAKE LOUVERS AND EXHAUST FANS – SEE HVAC DRAWINGS FOR LOCATIONS AND ADDITIONAL INFORMATION.
9. 12" SQ X 6" D CONC. SUMP, SEE STRUCT. & PLUMB. DWGS.
10. 4" W X 4' H CONC DYKE, SEE STRUCT. DWGS.
11. FLOOR DRAIN, SEE PLUMP. DWGS.
12. WINDOW: (SEE BORROWED LITE TYPES DWG A4)
    - FRAME: 3' W X 3'-10" H
    - SILL HEIGHT: 3'-6" AFF
    - FRAME MAT'L: 14 GA S.S., FULLY WELDED
    - JAMB SIZE: 2" W X 4" D
    - GLASS STOPS: 5/8" SQ. S.S. TUBES OR ANGLE.
    - GLAZING: 3/8" FIXED LAMINATED SAFETY GLASS
    - FRAME ANCHORS: 1/4"MIN X 4" S.S. EXP. BOLTS
13. ROLL DOWN FIRE SHUTTER:
    - 3'- 6" W MIN X 4' H MIN.
    - MATL: S.S.
    - 2 HR RATED W/ TEMP. ACTUATED FUSIBLE LINK.
    - PROVIDE ALL REQUIRED COMPONENTS TO ACHIEVE REQ'D FIRE RATING.

NASSAU COUNTY DEPARTMENT OF HEALTH
DIVISION OF ENVIRONMENTAL HEALTH
These plans are hereby approved
SHEET 17 OF 69
See first sheet hereof for date and signature

PARTITION TYPES 1

1. 8" CMU – HEIGHT OF WALL SHALL BE 12'-0" ABOVE FINISH FLOOR. PROVIDE HORIZONTAL JOINT REINFORCING IN FIRST COURSE AND THEN AT 16" O.C. VERTICALLY. SEE STRUCTURAL DWGS FOR ADDITIONAL INFORMATION. CMU WALL THICKNESS: 7 ⅝".
2. 8" CMU – CLASS D-2 HOLLOW CORE. HEIGHT OF WALL SHALL BE 12'-0" ABOVE FINISH FLOOR. PROVIDE HORIZONTAL JOINT REINFORCING IN FIRST COURSE AND THEN AT 16" O.C. VERTICALLY. SEE STRUCTURAL DWGS FOR ADDITIONAL INFORMATION. CMU WALL THICKNESS: 7 ⅝". 2-HOUR RATED UL DESIGN NO. U905

UNAUTHORIZED ALTERATION OR ADDITION TO THIS PLAN IS A VIOLATION OF SECTION 7209 OF THE NEW YORK STATE EDUCATION LAW, UNLESS THE PERSON IS ACTING UNDER THE DIRECTION OF A LICENSED PROFESSIONAL ENGINEER. ANY PLAN ALTERATIONS BY ANOTHER ENGINEER MUST BE MARKED AS SUCH, INCLUDING THE SIGNATURE AND SEAL OF THE ALTERING ENGINEER.

CAUTION: IF SHEET IS LESS THAN 34"x22" USE GRAPHIC SCALE

SYM	DESCRIPTION	DATE	APPR
1	APPROVAL SUBMISSION	3/26/12	-

NAVFAC

REGISTERED ARCHITECT DOMINIQUE BERNARD 020212 STATE OF NEW YORK

DES	MTR	DR	MTR
REVIEWED BY		CED	
PM/DM			
CHIEF ENG/ARCH		MDB	

DEPARTMENT OF THE NAVY
NAVAL FACILITIES ENGINEERING COMMAND
NORTHEAST IPT
AQUA NY
NAVAL FACILITIES ENGINEERING COMMAND ~ MID-ATLANTIC
NAVAL STATION - NORFOLK, VIRGINIA
NASSAU COUNTY, NEW YORK
MODIFICATIONS TO WATER TREATMENT FACILITY
FLOOR PLAN

CODE ID. NO. 80091	SIZE D
SCALE:	1/4"=1'-0"
MAXIMO NO. N62470-08-D-1001	
JOB ORDER NO. WE-25	
SPEC. NO.	
CONSTR. CONTR. NO. 112G02223	
NAVFAC DRAWING NO.	
SHEET A-1	OF --

NOV 07 2012

17

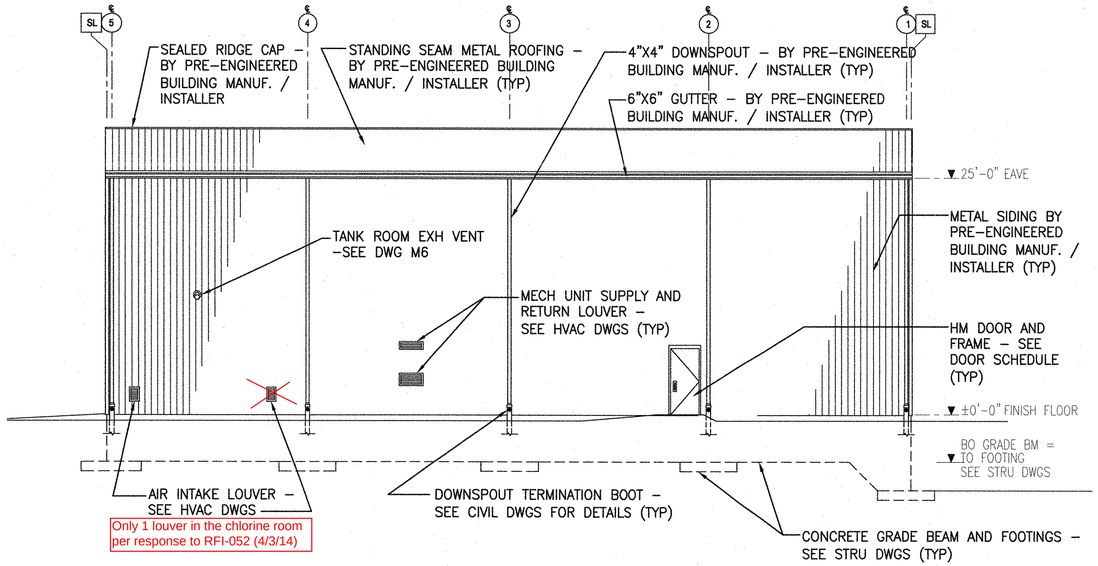

EAST ELEVATION

SCALE: 1/8" = 1'-0" A-1, A-2 (A4)

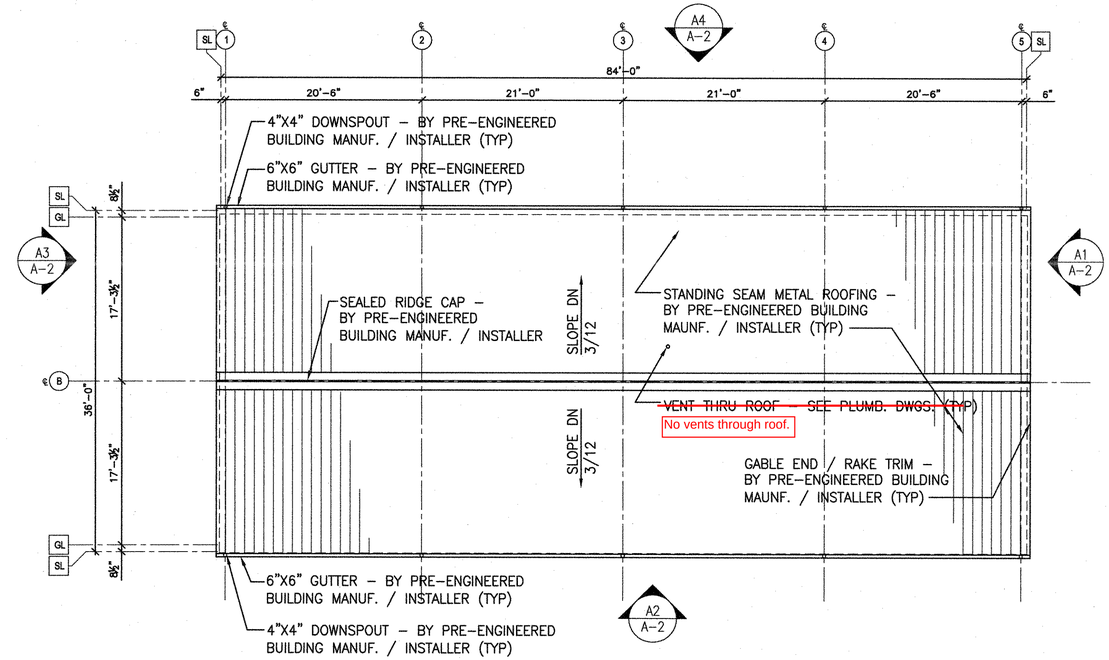

ROOF PLAN

SCALE: 1/8" = 1'-0" A-2 (A5) PLAN NORTH

UNAUTHORIZED ALTERATION OR ADDITION TO THIS PLAN IS A VIOLATION OF SECTION 7209 OF THE NEW YORK STATE EDUCATION LAW, UNLESS THE PERSON IS ACTING UNDER THE DIRECTION OF A LICENSED PROFESSIONAL ENGINEER. ANY PLAN ALTERATIONS BY ANOTHER ENGINEER MUST BE MARKED AS SUCH, INCLUDING THE SIGNATURE AND SEAL OF THE ALTERING ENGINEER.

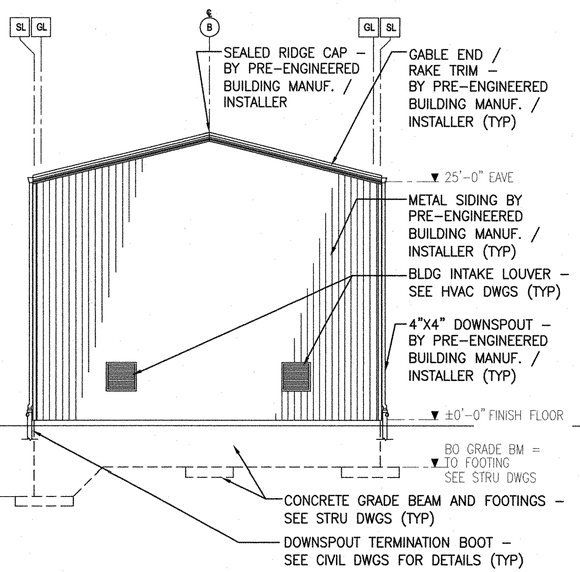

NORTH ELEVATION

SCALE: 1/8" = 1'-0" A-1, A-2 (A3)

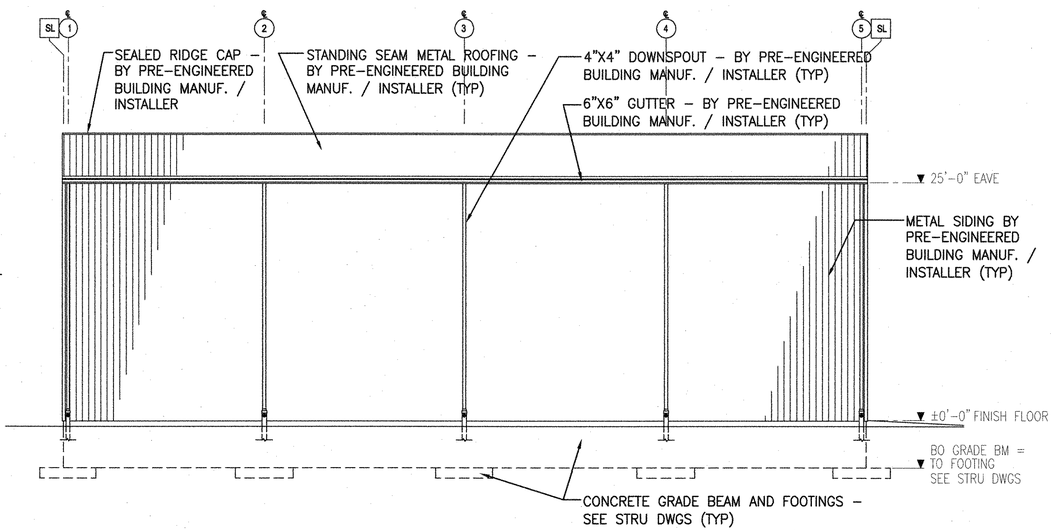

WEST ELEVATION

SCALE: 1/8" = 1'-0" A-1, A-2 (A2)

NASSAU COUNTY DEPARTMENT OF HEALTH
DIVISION OF ENVIRONMENTAL HEALTH
These plans are hereby approved
SHEET 18 OF 69
See first sheet hereof for date and signature

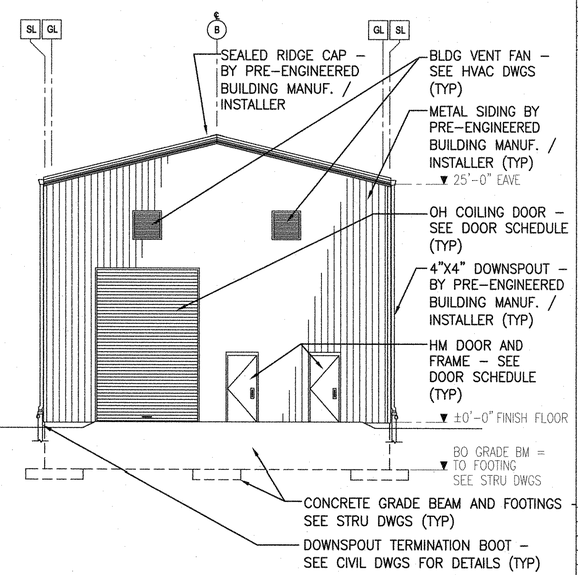

SOUTH ELEVATION

SCALE: 1/8" = 1'-0" A-1, A-2 (A1)

CAUTION: IF SHEET IS LESS THAN 34"x22" USE GRAPHIC SCALE

SYM	DESCRIPTION	DATE	APPR
1	APPROVAL SUBMISSION	3/30/12	

NAVFAC

REGISTERED ARCHITECT MARC DOMINIQUE DEVORSKY 020212 STATE OF NEW YORK

DES	MTR	DR	MTR
REVIEWED BY		CED	
PM/DM			
CHIEF ENG/ARCH		MDB	

DEPARTMENT OF THE NAVY
NAVAL FACILITIES ENGINEERING COMMAND ~ MID-ATLANTIC
NORTHEAST PT NAVAL STATION - NORFOLK, VIRGINIA
AQUA NY NASSAU COUNTY, NEW YORK

MODIFICATIONS TO WATER TREATMENT FACILITY

ROOF PLAN AND BUILDING ELEVATIONS

CODE ID. NO. 80091	SIZE D
SCALE:	1/4"=1'-0"
MAXIMO NO. N62470-08-D-1001	
JOB ORDER NO. WE-25	
SPEC. NO.	
CONSTR. CONTR. NO. 112G02223	
NAVFAC DRAWING NO.	
SHEET	OF --

A-2

NOV 07 2012
18

UNAUTHORIZED ALTERATION OR ADDITION TO THIS PLAN IS A VIOLATION OF SECTION 7209 OF THE NEW YORK STATE EDUCATION LAW, UNLESS THE PERSON IS ACTING UNDER THE DIRECTION OF A LICENSED PROFESSIONAL ENGINEER. ANY PLAN ALTERATIONS BY ANOTHER ENGINEER MUST BE MARKED AS SUCH, INCLUDING THE SIGNATURE AND SEAL OF THE ALTERING ENGINEER.

GENERAL NOTES:

1. CEILING AND WALL ASSEMBLIES FOR ELECTRICAL ROOM TO BE SAME AS 15% SODIUM HYPOCHLORITE STORAGE ROOM EXCEPT WITHOUT FIRE RATING.
2. PRE-ENGINEERED BUILDING MANUF / INSTALLER SHALL PROVIDE ALL CORNER, END, SILL, ETC. TRIMS AND CLOSURE GASKETS AS REQUIRED TO CLOSE ALL GAPS ON INTERIOR AND EXTERIOR METAL PANELS AND PROVIDE A WEATHER-TIGHT BUILDING.

KEY NOTES 1

1. ROOF ASSEMBLY
   A. EXP. FASTENER 'V'GROOVE METAL ROOF
   B. 'Z' GIRT PURLINS WITH VINYL-FACED R-19 BATT INSUL.
   C. STEEL BENTS
   D. METAL LINER PANEL
2. EXTERIOR WALL ASSEMBLY
   A. VERTICAL EXP. FASTENER 'V' GROOVE METAL SIDING
   B. HORIZONTAL 'Z' GIRTS WITH VINYL-FACED R-19 BATT INSUL.
   C. METAL LINER PANEL
3. CEILING ASSEMBLY: (2 HR FIRE RATING - FM FC 224-2, GA. FILE NO. FC 2116)
   A. (2) LAYERS 5/8" TYPE X GYP BD, TYPE S-12 2" SCREWS @ 12" MAX O.C.
   B. 8" GALV STEEL CFMF JOISTS @ 12" O.C. - SEE STRU DRAWINGS.
   C. 1" GALVANIZED DECK - SEE STRU DRAWINGS.
   D. 3" CONCRETE SLAB - SEE STRU DRAWINGS.
   E. PROVIDE SEALANT AS REQ'D FOR RATING.
4. BOND BEAM - SEE STRU DRAWINGS.
5. 8" CMU WALL - SEE FLOOR PLAN FOR PARTITION TYPES.
6. SEALED RIDGE CAP - BY PRE-ENGINEERED BUILDING MANUF / INSTALLER.
7. METAL GUTTER - BY PRE-ENGINEERED BUILDING MANUF / INSTALLER.
8. EAVE STRUT - BY PRE-ENGINEERED BUILDING MANUF / INSTALLER.
9. METAL JOIST HANGER - SEE STRU DRAWINGS.
10. GRADE BEAM - SEE STRUC DRAWINGS.
11. COLUMN BENT FOOTING BEYOND - SEE STRUC DRAWINGS.
12. CONCRETE FLOOR SLAB - SEE STRU DRAWINGS.
13. 2" RIGID PERIMETER INSUL 2'-0" MIN BELOW GRADE.
14. PREFABRICATED TRENCH DRAIN SYSTEM - SEE PLUMB AND STRU DWGS FOR ADD'L INFO.

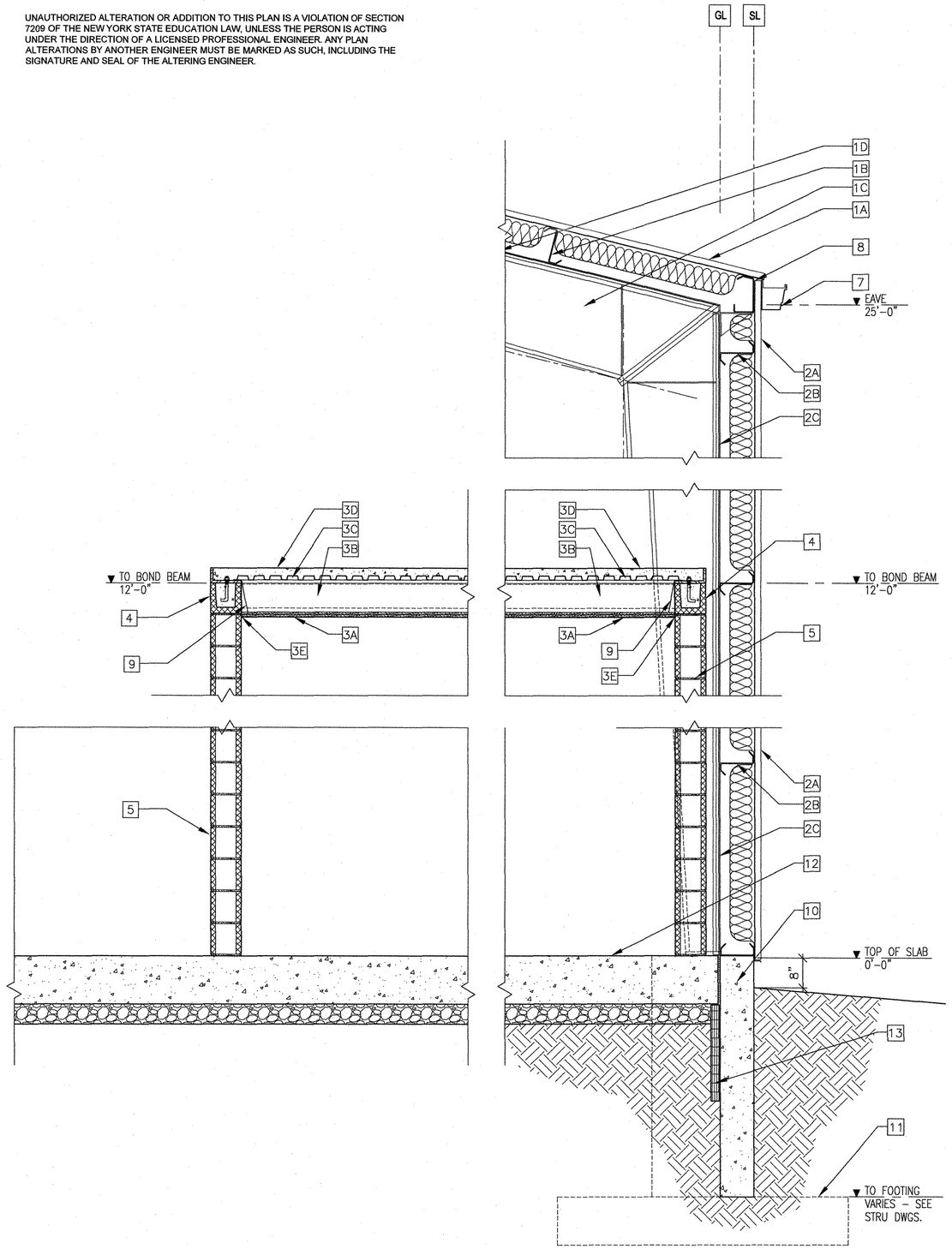

WALL SECTION
SCALE: 3/4" = 1'-0" A-1, A-3 A3

WALL SECTION
SCALE: 3/4" = 1'-0" A-1, A-3 A2

NASSAU COUNTY DEPARTMENT OF HEALTH
DIVISION OF ENVIRONMENTAL HEALTH
These plans are hereby approved
SHEET 19 OF 69
See last sheet hereof for date and signature

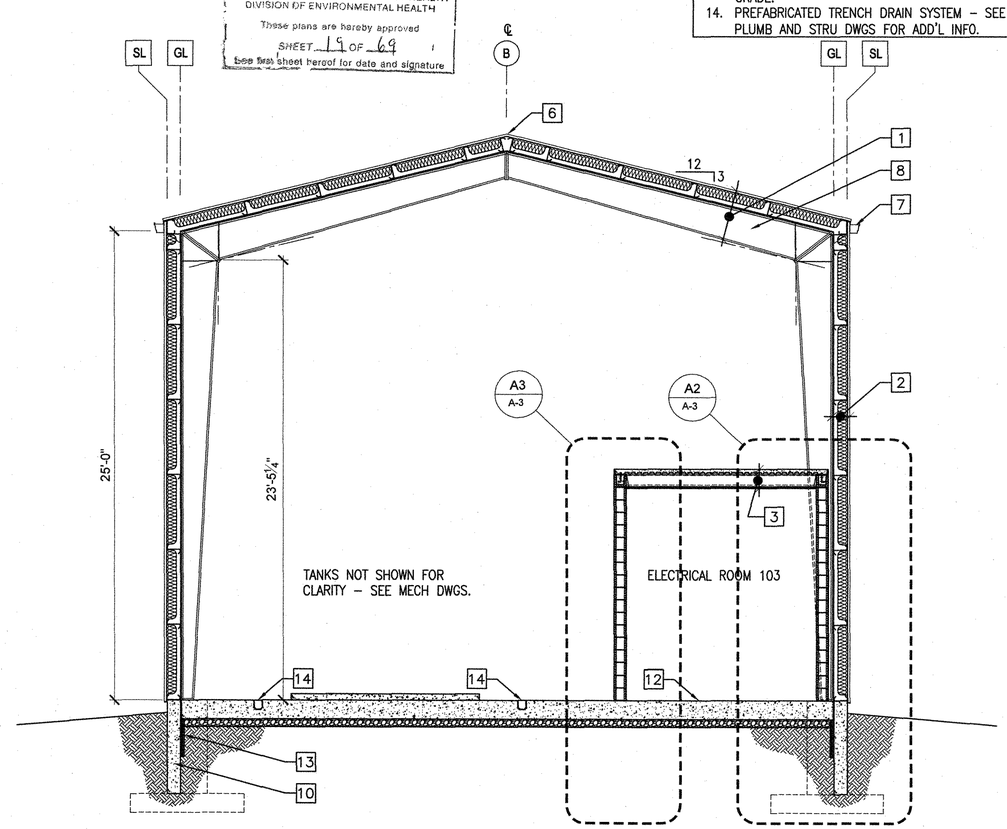

BUILDING SECTION
SCALE: 1/4" = 1'-0" A-1 A1

CAUTION: IF SHEET IS LESS THAN 34"x22" USE GRAPHIC SCALE

SYM	DESCRIPTION	DATE	APPR
-	APPROVAL SUBMISSION	3/26/12	-

NAVFAC

REGISTERED ARCHITECT JAMES DOMINIQUE MARRONE 026212 STATE OF NEW YORK

DES	MTR	DR	MTR
REVIEWED BY		CED	
PM/DM			
CHIEF ENG/ARCH		MDB	

DEPARTMENT OF THE NAVY
NAVAL FACILITIES ENGINEERING COMMAND ~ MID-ATLANTIC
NAVAL STATION - NORFOLK, VIRGINIA
NORTHEAST IPT
AQUA NY
NASSAU COUNTY, NEW YORK
MODIFICATIONS TO WATER TREATMENT FACILITY
BUILDING SECTIONS

CODE ID. NO. 80091	SIZE D
SCALE:	AS NOTED
MAXIMO NO. N62470-08-D-1001	
JOB ORDER NO. WE-25	
SPEC. NO.	
CONSTR. CONTR. NO. 112G02223	
NAVFAC DRAWING NO.	
SHEET	OF --

A-3

19

NOV 07 2012

DOOR SCHEDULE

EXTERIOR DOOR	MARK	SIZE WIDTH x HT	SIZE THK.	TYPE DOOR TYPE	TYPE DOOR MTL.	TYPE FRAME TYPE	TYPE FRAME MTL.	DETAILS H	DETAILS J	DETAILS S	GLAZING TYPE	FIRE RATING	REMARKS
●	101/1	3'–0" X 7'–0"	1 3/4"	D1	INHM	F1	HM	H1	J1	S1	–	–	NOTE #3 Treatment Room Door
●	101/2	10'–6" X 16'–0"	–	D2	STL	–	–	H3	J3	–	–	–	NOTE #1 AND 3 Overhead Coiling Door
●	101/3	3'–0" X 7'–0"	1 3/4"	D1	INHM	F1	HM	H1	J1	S1	–	–	NOTE #3 Treatment Room Door
●	102/1	3'–0" X 7'–0"	1 3/4"	D1	INHM	F1	HM	H2	J2	S2	–	90 MIN	NOTE # 2 AND 3 Chlorine Room Door
	~~103/1~~	~~3'–8" X 7'–0"~~	~~1 3/4"~~	~~D1~~	~~HM~~	~~F1~~	~~HM~~	~~H4~~	~~J4~~		~~–~~	~~90 MIN~~	~~NOTE # 2~~ Phosphate Room Door - Does not exist
	104/1	3'–0" X 8'–0"	1 3/4"	D1	HM	F2	HM	H4	J4	–	–	–	Electrical Room Door

DOOR SCHEDULE ABBREVIATIONS:

DOOR/FRAME COMPONENTS

HM HOLLOW METAL
INHM INSULATED HOLLOW METAL
STL STEEL DOOR

DOOR SCHEDULE REMARK NOTES:

1. DOOR SHALL BE AN INSULATED OVERHEAD COILING DOOR WITH ELECTRIC DOOR OPERATOR.
2. DOOR SHALL SWITCH MECHANICAL VENTILATION FAN ON WHEN ROOM IS OCCUPIED – SEE ELECTRICAL DRAWINGS.
3. ALL EXTERIOR DOORS SHALL HAVE A SECURITY DOOR CONTACT BY AQUA NY.

GENERAL NOTES DOORS, FRAMES & HARDWARE:

1. INTERIOR DOOR CLOSERS MUST BE SET NO HIGHER THAN 5 POUNDS OF PRESSURE TO OPERATE (TYP. FOR INTERIOR NON–RATED DOORS ONLY)
2. OPENING HARDWARE IS CENTERED A MAXIMUM OF 48" ABOVE FINISH FLOOR.
3. MINIMUM STRIKE SIDE CLEARANCE ON PULL SIDE OF DOOR IS:
   A. 24" MIN. EXTERIOR DOORS.
   B. 18" MIN. INTERIOR DOORS, FRONT APPROACH.
   C. 36" MIN. INTERIOR DOORS, HINGE APPROACH (IF CORRIDOR IS 60" MINIMUM).
   D. 42" MIN. INTERIOR DOORS, HINGE APPROACH (IF CORRIDOR IS LESS THAN 60", BUT GREATER THAN 54").
   E. 24" MIN. INTERIOR DOORS, LATCH APPROACH.
4. MINIMUM STRIKE SIDE CLEARANCE ON PUSH SIDE OF DOOR. IS LESS THAN 60", BUT GREATER THAN 54".
   A. 0", FRONT APPROACH.
   B. 12" MIN., FRONT APPROACH W/ LATCH AND CLOSER.
   C. 54" MIN. TOTAL WIDTH, HINGE APPROACH.
   D. 24" MIN., LATCH APPROACH.
5. DOOR CLOSERS MUST BE SET SO THAT IT TAKES AT LEAST 3 SECONDS TO CLOSE FROM AN OPEN POSITION OF 70^ TO WITHIN 3" OF THE LATCH.
6. SEE STRUCTRUAL DRAWINGS FOR LINTELS

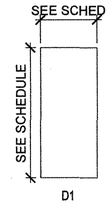

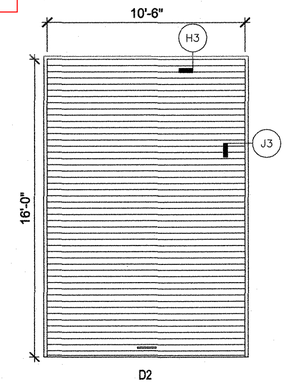

1 DOOR TYPES
SCALE: 1/4" = 1'-0"

FINISH SCHEDULE

NOTE: ALL INTERIOR DOORS & FRAMES TO BE PAINTED PT–3

ROOM NO.	NAME	FLOOR FINISH	FLOOR BASE	WALLS NORTH	WALLS EAST	WALLS SOUTH	WALLS WEST	CEILINGS FINISH	CEILINGS HEIGHT
101	TREATMENT ROOM	SC	–	MTL LP	PT CMU/MTL LP	PT CMU/MTL LP	MTL LP	MTL LP	VARIES
102	15% SODIUM HYPO–CLORITE STOR. RM.	SC	–	PT CMU	PT CMU	PT CMU	PT CMU	PT GYP	11'–4"+/–
~~103~~	~~PHOSPHATE TANK ROOM~~	~~SC~~	~~–~~	~~PT CMU~~	~~PT CMU~~	~~PT CMU~~	~~PT CMU~~	~~PT GYP~~	~~11'–4"+/–~~
104	ELECTRICAL ROOM	SC	–	PT CMU	PT CMU	PT CMU	PT CMU	PT GYP	11'–4"+/–

Phosphate room - Does not exist.

FINISH SCHEDULE ABBREVIATIONS:

FLOORS:
SC SEALED CONCRETE

BASES:
– –

WALLS
MTL LP PREFINISHED METAL LINER PANELS BY PREENGINEERED BUILDING MANUF.
PT CMU PAINTED CMU
PT CMU/MTL LP PAINTED CMU (LOW) WITH PREFINISHED METAL LINER PANELS (HIGH) BY PREENGINEERED BUILDING MANUF.

CEILINGS
MTL LP PREFINISHED METAL LINER PANELS BY PREENGINEERED BUILDING MANUF.
PT GYP PAINTED GYPSUM WALL BOARD

FINISH NOTE: ALL DOORS AND FRAMES SHALL BE PAINTED.

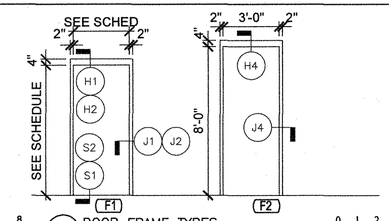

2 DOOR FRAME TYPES
SCALE: 1/4" = 1'-0"

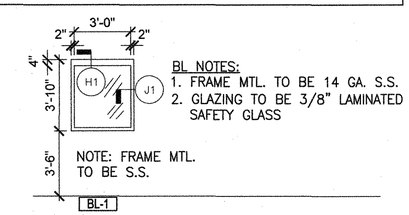

BL NOTES:
1. FRAME MTL. TO BE 14 GA. S.S.
2. GLAZING TO BE 3/8" LAMINATED SAFETY GLASS

NOTE: FRAME MTL. TO BE S.S.

2 BORROWED LITE (BL) TYPES
SCALE: 1/4" = 1'-0"

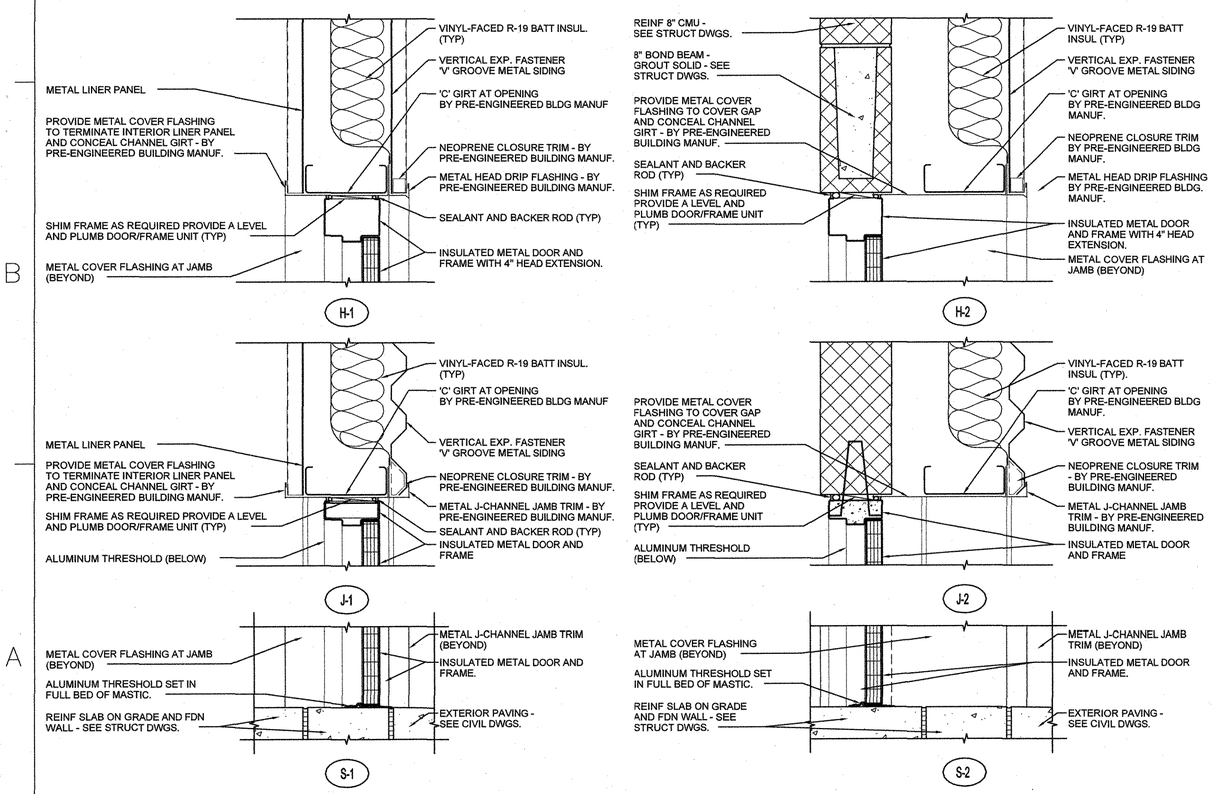

3 DOOR DETAILS
SCALE: 1 1/2" = 1'-0"

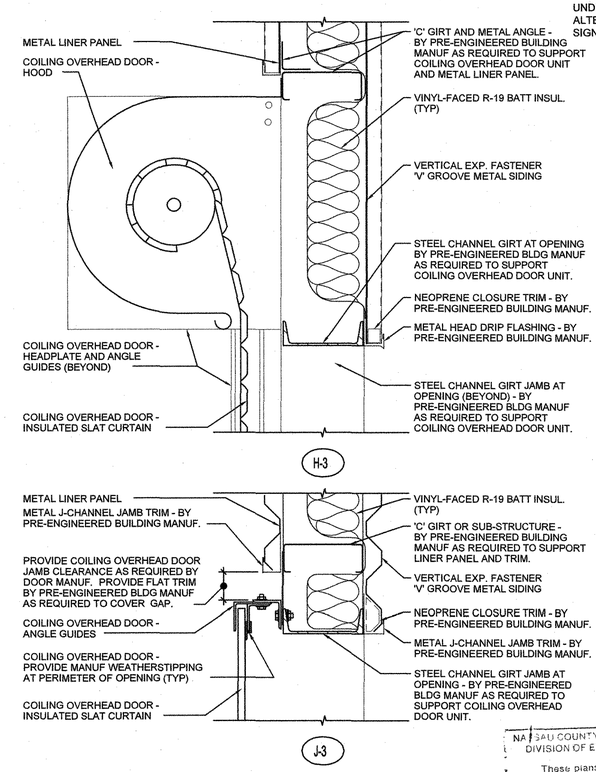

UNAUTHORIZED ALTERATION OR ADDITION TO THIS PLAN IS A VIOLATION OF SECTION 7209 OF THE NEW YORK STATE EDUCATION LAW, UNLESS THE PERSON IS ACTING UNDER THE DIRECTION OF A LICENSED PROFESSIONAL ENGINEER. ANY PLAN ALTERATIONS BY ANOTHER ENGINEER MUST BE MARKED AS SUCH, INCLUDING THE SIGNATURE AND SEAL OF THE ALTERING ENGINEER.

NASSAU COUNTY DEPARTMENT OF HEALTH
DIVISION OF ENVIRONMENTAL HEALTH
These plans are hereby approved
SHEET 20 OF 49
see first sheet hereof for date and signature

CAUTION: IF SHEET IS LESS THAN 34"x22" USE GRAPHIC SCALE

1						STM
						DESCRIPTION
						DATE
						APPR

APPROVAL SUBMISSION 3/30/12

NAVFAC

REGISTERED ARCHITECT MICHAEL DOMINIQUE BERNARD 028212 STATE OF NEW YORK

DES MTR	DR MTR
REVIEWED BY	CED
PM/DM	
CHIEF ENG/ARCH	MDB

DEPARTMENT OF THE NAVY
NAVAL FACILITIES ENGINEERING COMMAND
NORTHEAST IPT
AQUA NY

NAVAL FACILITIES ENGINEERING COMMAND ~ MID–ATLANTIC
NAVAL STATION – NORFOLK, VIRGINIA

NASSAU COUNTY, NEW YORK
MODIFICATIONS TO WATER TREATMENT FACILITY

SCHEDULES AND DETAILS

CODE ID. NO. 80091	SIZE D
SCALE:	AS NOTED
MAXIMO NO. N62470–08–D–1001	
JOB ORDER NO. WE–25	
SPEC. NO.	
CONSTR. CONTR. NO. 112G02223	
NAVFAC DRAWING NO.	
SHEET	OF — —

A-4

20

NOV 07 2012

UNAUTHORIZED ALTERATION OR ADDITION TO THIS PLAN IS A VIOLATION OF SECTION 7209 OF THE NEW YORK STATE EDUCATION LAW, UNLESS THE PERSON IS ACTING UNDER THE DIRECTION OF A LICENSED PROFESSIONAL ENGINEER. ANY PLAN ALTERATIONS BY ANOTHER ENGINEER MUST BE MARKED AS SUCH, INCLUDING THE SIGNATURE AND SEAL OF THE ALTERING ENGINEER.

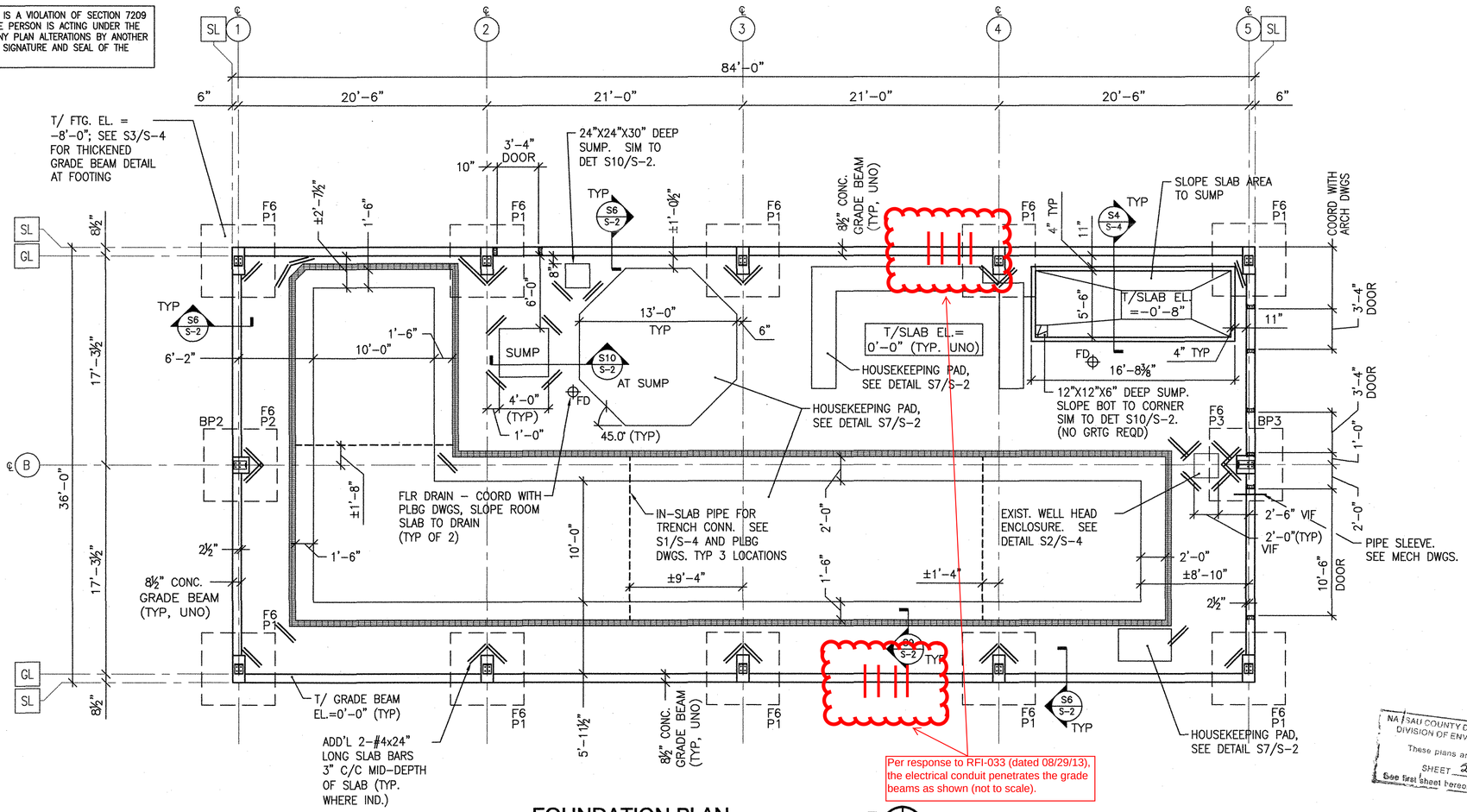

FOUNDATION PLAN

SCALE: 3/16" = 1'-0" S-1

PLAN NORTH

SCALE: 3/16" = 1'-0"

GENERAL NOTES

A. ELEVATION TO TOP OF FINISHED FLOOR = 0'-0" (REF. EL. = 62.17') SEE CIVIL DRAWINGS.

B. PROVIDE 12" CONCRETE SLAB ON GRADE W/ #6 AT 12" O.C. E.W. TOP AND BOTTOM UNO. SEE S1/S-2.

C. CENTERLINE OF FOOTING = CENTERLINE OF PIER

D. COORDINATE WITH WORK OF OTHER TRADES FOR ADDITIONAL ITEMS TO BE EMBEDDED IN CONCRETE.

E. T/ FTG. ELEVATION = -5'-0" BELOW FINISHED FLOOR EL., UNO.

F. T/ PIER ELEV. = 0'-0", UNO.

G. ALL GRADE BEAMS TO BE TYPE GB1.

H. "±" INDICATES DIMENSIONS TO BE VERIFIED WITH MECHANICAL CONTRACTOR PRIOR TO FABRICATION.

I. "FX" DENOTES FOOTING MARK. FOR FOOTING SIZES AND REINFORCEMENT, SEE FOOTING SCHEDULE THIS SHEET.

J. "PX" DENOTES PIER MARK. FOR PIER SIZES AND REINFORCEMENT, SEE PIER SCHEDULE THIS SHEET.

K. "BPX" DENOTES BASE PLATE MARK. BASE PLATES TO BE TYPE BP1 UNO. SEE S7/S-3.

L. PROVIDE CONTROL/CONSTRUCTION JOINT AT FLOOR SLAB PER SPEC SECTION 03 30 00 REQUIREMENTS. SEE S2 AND S3/S-2 AND S1/S-5.

M. SEE S8/S-2 FOR GENERATOR AND TRANSFORMER PAD DETAILS. SEE CIVIL DRAWINGS FOR PAD SIZES AND LOCATIONS.

N. SEE S5/S-3 FOR TYP. SLAB REINFORCEMENT AT FLOOR PENETRATION.

O. SEE S6/S-3 FOR TYP. GRADE BEAM REINFORCEMENT AT PIPE PENETRATION.

P. AT EXTERIOR CONCRETE WALKWAYS ADJACENT TO BLDG, DOWEL SLAB INTO EXTERIOR GRADE BEAMS PER DETAIL S4/S-3 (TYP).

Q. SEE S2/S-3 FOR TYP. CMU WALL AT FLOOR SLAB DETAIL.

R. FOUNDATION DESIGN BASED ON REACTIONS SHOWN IN TABLE ON THIS SHEET. VERIFY FINAL COLUMN REACTIONS WITH PROJECT STRUCTURAL ENGINEER PRIOR TO FABRICATION.

S. MINIMUM ULTIMATE CONCRETE COMPRESSIVE STRENGTH OF 4,000 PSI AT 28 DAYS.

T. SEE S-5 FOR CMU LINTEL SIZE AND REINFORCMENT. REFER TO ARCH. DRAWINGS FOR LINTEL LOCATIONS.

U. COORDINATE ALL WALL OPENING SIZES AND LOCATIONS WITH ARCHITECTURAL DRAWINGS.

GRADE BEAM SCHEDULE

GB1	8 1/2" (W) x 5'-0" (D) W/ 2-#6 T, B, & MID-DEPTH W/ #4 STIRRUPS AT 12" O.C.

FOOTING SCHEDULE

MARK	FOOTING SIZE	THICKNESS	REINF. (T & B)	DETAIL
F6	6'-0" X 6'-0"	12"	6-#6 E.W EQ. SP.	S5/S-2

PIER SCHEDULE

MARK	DIMENSIONS (L X W)	VERTICAL BARS	TIES	DETAIL
P1	27" X 12"	6 - #8	#3 AT 12"	S5/S-2
P2	16" X 16"	4 - #8	#3 AT 12"	S5/S-2
P3	18" X 18"	6 - #8	#3 AT 12"	S5/S-2

COLUMN FOOTING REACTIONS (UNFACTORED)

MARK	VERTICAL LOAD (KIPS)	SHEAR LOAD (KIPS)
F6	17.5	7.76

CAUTION: IF SHEET IS LESS THAN 34"x22" USE GRAPHIC SCALE

NASSAU COUNTY DEPARTMENT OF HEALTH
DIVISION OF ENVIRONMENTAL HEALTH
These plans are hereby approved
SHEET 21 OF 69
See first sheet hereof for date and signature

SYM	DESCRIPTION	DATE	APPR
1	APPROVAL SUBMISSION	1/29/12	

STATE OF NEW YORK · DANIEL ROY HAYES · 084560 · LICENSED PROFESSIONAL ENGINEER

DES	SEH
DR	SEH
REVIEWED BY	ATC
PM/DM	DB
CHIEF ENG/ARCH	DRH

DEPARTMENT OF THE NAVY
NAVAL FACILITIES ENGINEERING COMMAND
NORTHEAST IPT
AQUA NY
NAVAL FACILITIES ENGINEERING COMMAND ~ MID-ATLANTIC
NAVAL STATION - NORFOLK, VIRGINIA
NASSAU COUNTY, NEW YORK
MODIFICATIONS TO WATER TREATMENT FACILITY
FOUNDATION PLAN

CODE ID. NO. 80091	SIZE D
SCALE:	3/16"=1'-0"
MAXIMO NO. N62470-08-D-1001	
JOB ORDER NO. WE-25	
SPEC. NO.	
CONSTR. CONTR. NO.	112G02223
NAVFAC DRAWING NO.	
SHEET	OF --
S-1	

NOV 07 2012

21

- SAW CUT CONTROL JOINTS WITHIN 12 HOURS OF CASTING SLAB. SEE S2/S-2.
- VAPOR RETARDER TO BE CONTINUOUS AND OVERLAPPED NOT LESS THAN 12" AT ALL SEAMS. TAPE ALL SEAMS.
- EXTEND VAPOR RETARDER UP THE FACE OF EXTERIOR GRADE BEAMS (TERMINATE AT TOP OF SLAB ELEV) ALONG SLAB EDGE, AND SECURE/SEAL VAPOR RETARDER TO WALL WITH APPROVED MASTIC PER SPEC.

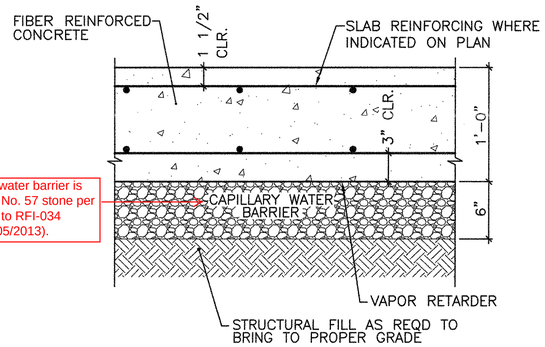

Capillary water barrier is AASHTO No. 57 stone per response to RFI-034 (dated 9/05/2013).

TYPICAL SLAB ON GRADE (S1)
SCALE: 1½" = 1'-0" S-2

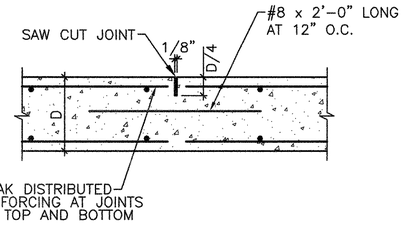

1. SAW CUT CONTROL JOINTS WITHIN 12 HOURS OF CASTING SLAB.
2. JOINTS TO BE SPACED 15 FEET OC MAX. SEE SPEC SECTION 03 30 00.
3. FILL JOINTS IN SLABS PERMANENTLY EXPOSED TO PUBLIC VIEW WITH SLAB CONTROL JOINT SEALER (SEE SPEC SECTION 03 30 00) AFTER CONCRETE HAS REACHED A STABLE, DRY CONDITION.

TYPICAL SLAB ON GRADE CONTROL JOINT (S2)
SCALE: 1½" = 1'-0" S-2

See following page for control joint layout drawing.

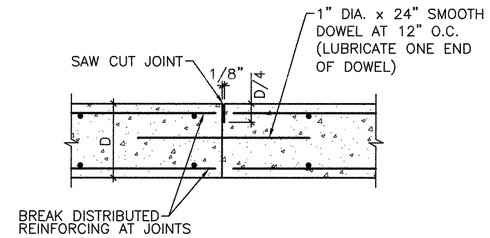

TYPICAL SLAB ON GRADE CONSTRUCTION JOINT (S3)
SCALE: 1½" = 1'-0" S-2

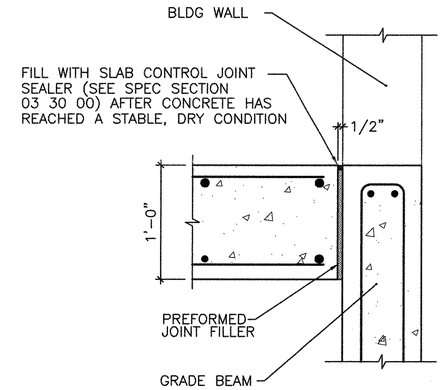

TYPICAL ISOLATION JOINT (S4)
SCALE: 1½" = 1'-0" S-2

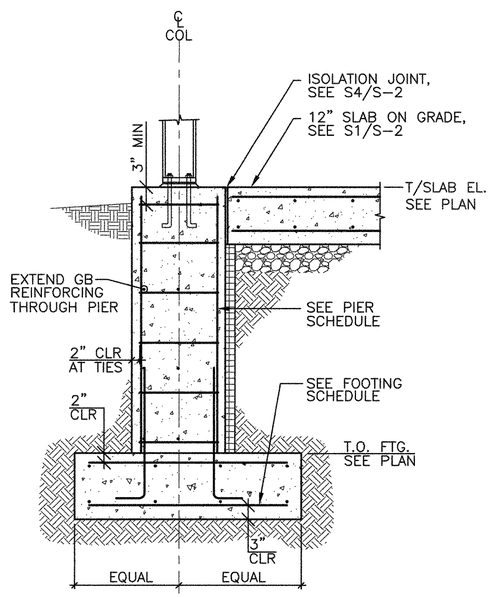

TYPICAL PIER AT FOOTING (S5)
SCALE: ¾" = 1'-0" S-2

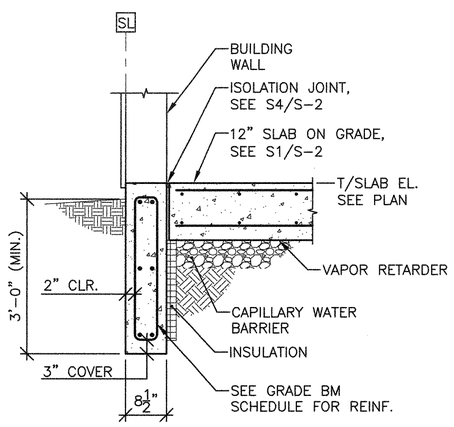

TYPICAL GRADE BEAM (S6)
SCALE: ¾" = 1'-0" S-2

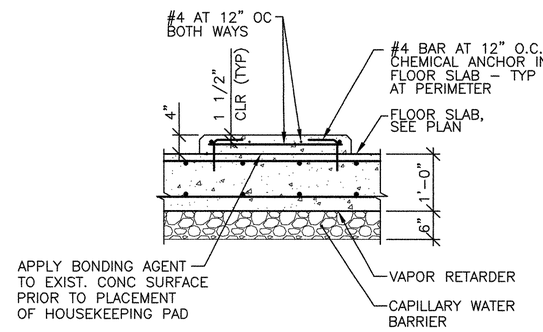

HOUSEKEEPING PAD (S7)
SCALE: ¾" = 1'-0" S-2

NOTE: SEE MECH DRAWINGS FOR SIZE AND LOCATION OF HOUSEKEEPING PADS

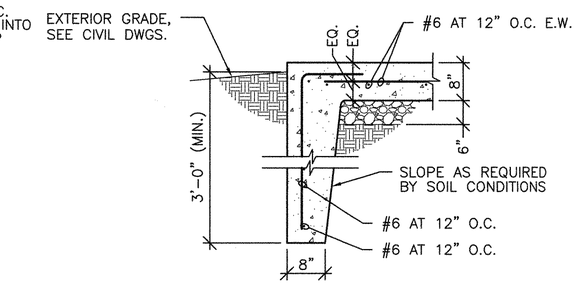

GENERATOR AND TRANSFORMER PAD DETAIL (S8)
SCALE: ¾" = 1'-0" S-2

NOTE: SEE CIVIL DRAWINGS FOR PAD SIZE AND LOCATIONS

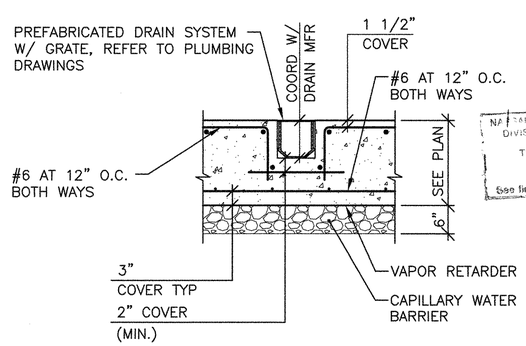

TRENCH DRAIN DETAIL (S9)
SCALE: ¾" = 1'-0" S-2

NOTE: SEE MECH AND PLBG DRAWINGS FOR SIZE AND LOCATION OF DRAIN

NASSAU COUNTY DEPARTMENT OF HEALTH
DIVISION OF ENVIRONMENTAL HEALTH
These plans are hereby approved
SHEET 22 OF 67
See first sheet hereof for date and signature

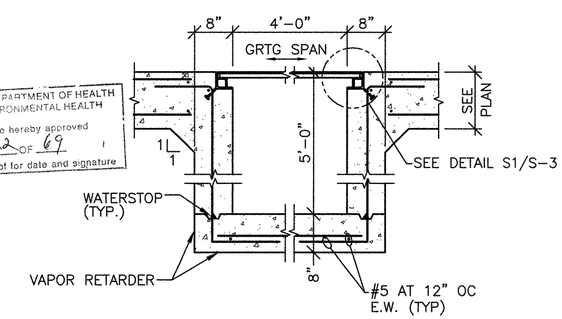

SUMP DETAIL (S10)
SCALE: ¾" = 1'-0" S-2

UNAUTHORIZED ALTERATION OR ADDITION TO THIS PLAN IS A VIOLATION OF SECTION 7209 OF THE NEW YORK STATE EDUCATION LAW, UNLESS THE PERSON IS ACTING UNDER THE DIRECTION OF A LICENSED PROFESSIONAL ENGINEER. ANY PLAN ALTERATIONS BY ANOTHER ENGINEER MUST BE MARKED AS SUCH, INCLUDING THE SIGNATURE AND SEAL OF THE ALTERING ENGINEER.

CAUTION: IF SHEET IS LESS THAN 34"x22" USE GRAPHIC SCALE

Attachment 1 to RFI-036A: This control joint layout drawing was accepted with the response to this RFI on 10/10/2013.

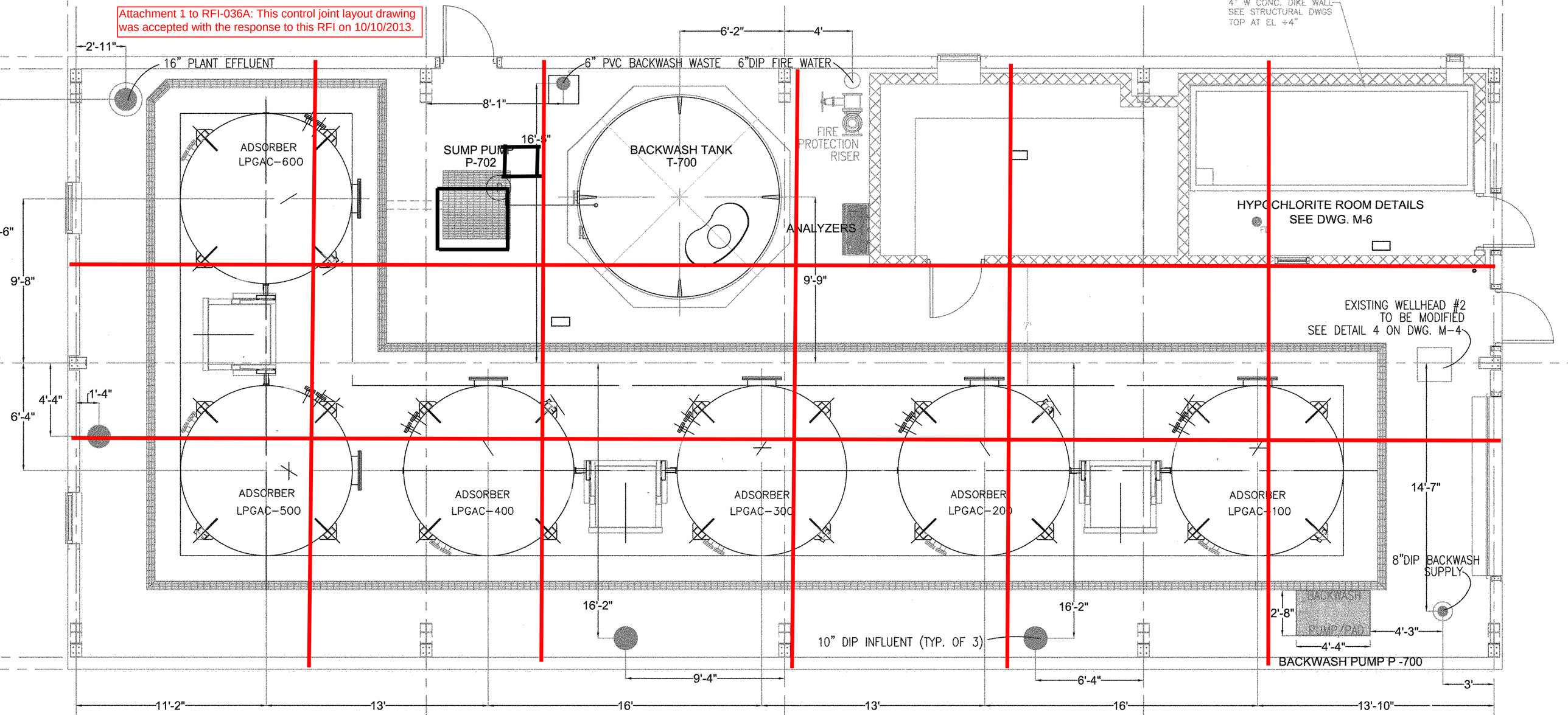

NOTES:
1. GRATING SHALL BE IN PIECES AS PER WIDTHS SHOWN SUCH THAT WEIGHT OF INDIVIDUAL COVER PLATE ASSEMBLY SHALL NOT EXCEED 40 LBS. EACH PLATE SHALL BE PROVIDED WITH LIFTING HOLES AT EACH END.
2. 1 1/2" GALVANIZED STEEL GRATING: 1 1/2"x3/16" BEARING BARS AT 1 3/16" O.C. CROSS BARS AT 4" O.C.

UNAUTHORIZED ALTERATION OR ADDITION TO THIS PLAN IS A VIOLATION OF SECTION 7209 OF THE NEW YORK STATE EDUCATION LAW, UNLESS THE PERSON IS ACTING UNDER THE DIRECTION OF A LICENSED PROFESSIONAL ENGINEER. ANY PLAN ALTERATIONS BY ANOTHER ENGINEER MUST BE MARKED AS SUCH, INCLUDING THE SIGNATURE AND SEAL OF THE ALTERING ENGINEER.

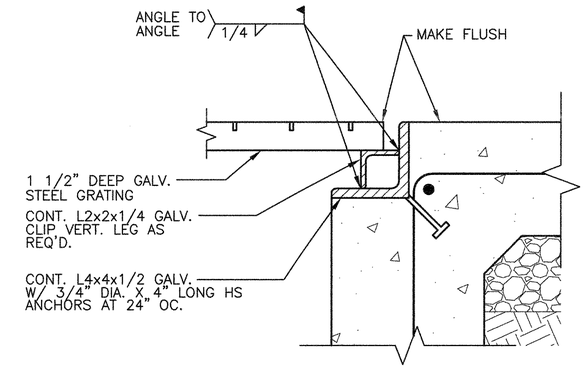

SUMP DETAIL (S1)
SCALE: 3" = 1'-0" S-3

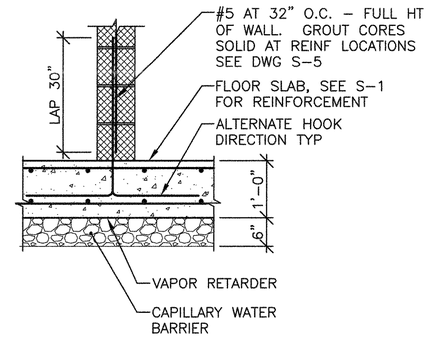

CMU WALL AT FLOOR SLAB (S2)
SCALE: 3/4" = 1'-0" S-3

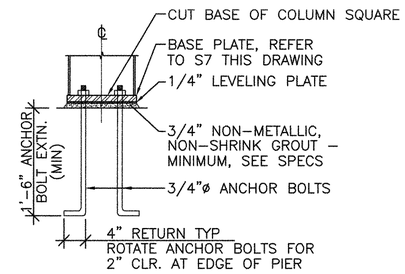

BASE PLATE/ANCHOR BOLT EMBEDMENT (S3)
SCALE: 1" = 1'-0" S-3

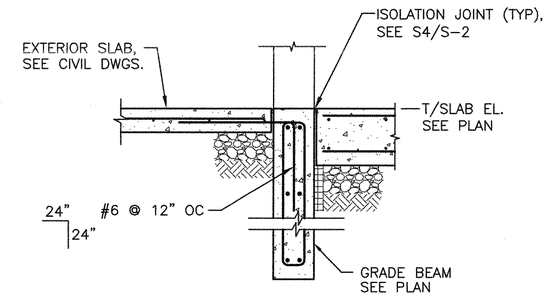

EXTERIOR SLAB CONNECTION TO GRADE BEAM DETAIL (S4)
SCALE: 3/4" = 1'-0" S-3

NOTE: SEE CIVIL DRAWINGS FOR SLAB SIZE AND LOCATIONS

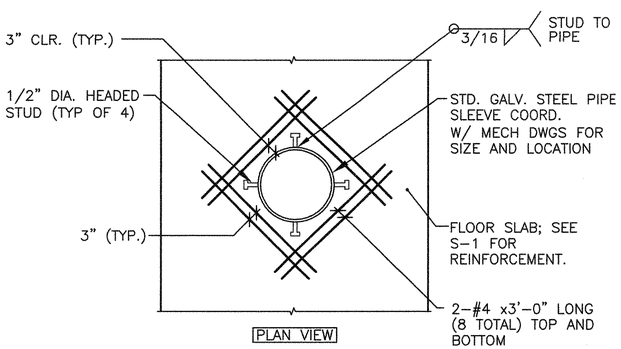

TYP. FLOOR SLEEVE (S5)
SCALE: 1" = 1'-0" S-3

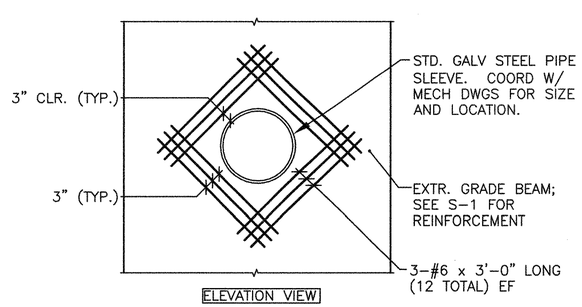

TYP. WALL PIPE AT EXTR. GRADE BEAM (S6)
SCALE: 1" = 1'-0" S-3

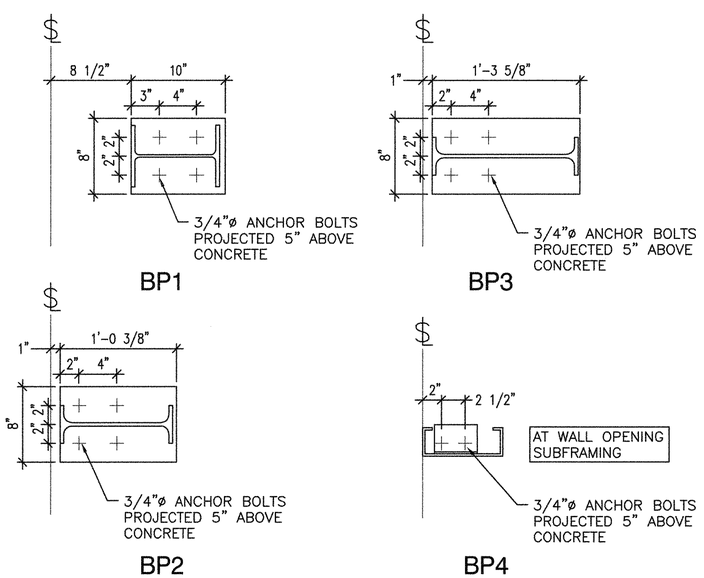

ANCHOR BOLT LAYOUTS AND BASE PLATE DIMENSIONS (S7)
SCALE: 1½" = 1'-0" S-3

NOTE: VERIFY FINAL ANCHOR BOLT/BASE PLATE/ COLUMN LOCATIONS WITH MANUFACTURER'S PRE-ENGINEERED BUILDING DRAWINGS

NASSAU COUNTY DEPARTMENT OF HEALTH
DIVISION OF ENVIRONMENTAL HEALTH
These plans are hereby approved
SHEET 23 OF 69
See first sheet hereof for date and signature

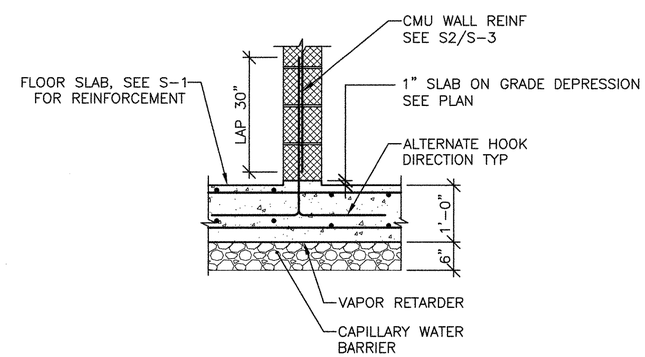

DEPRESSED FLOOR SLAB (S8)
SCALE: 3/4" = 1'-0" S-3

CAUTION: IF SHEET IS LESS THAN 34"x22" USE GRAPHIC SCALE

STM	DESCRIPTION	DATE	APPR
	NASSAU COUNTY DEPT. OF HEALTH SUBMITTAL	9/9/2011	

NAVFAC

STATE OF NEW YORK · DANIEL ROY HAIN · 084560 · LICENSED PROFESSIONAL ENGINEER

DES	SEH	DR	SEH
REVIEWED BY		ATC	
PM/DM		DB	
CHIEF ENG/ARCH		DRH	

DEPARTMENT OF THE NAVY
NAVAL FACILITIES ENGINEERING COMMAND
NORTHEAST IPT
AQUA NY
NAVAL FACILITIES ENGINEERING COMMAND ~ MID-ATLANTIC
NAVAL STATION - NORFOLK, VIRGINIA
NASSAU COUNTY, NEW YORK
MODIFICATIONS TO WATER TREATMENT FACILITY
FOUNDATION DETAILS

CODE ID. NO. 80091	SIZE D
SCALE:	AS NOTED
MAXIMO NO. N62470-08-D-1001	
JOB ORDER NO. WE-25	
SPEC. NO.	
CONSTR. CONTR. NO. 112G02223	
NAVFAC DRAWING NO.	
SHEET	OF --

S-3

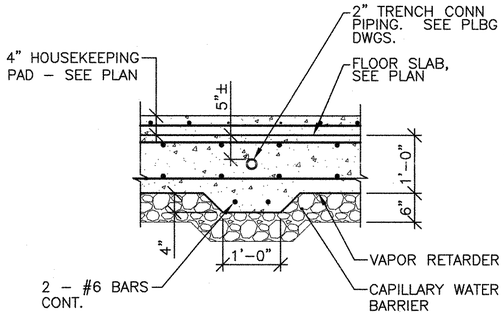

IN-SLAB PIPE DETAIL (S1)

SCALE: ¾" = 1'-0" S-4

NOTE: SEE PLBG DRAWINGS FOR EXTENTS OF PIPING AND CONN TO TRENCHES.

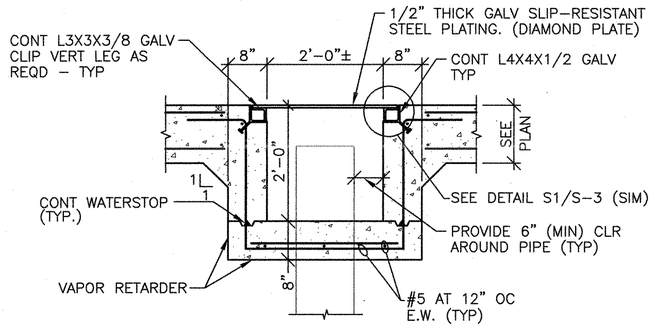

EXIST WELL HEAD ENCLOSURE (S2)

SCALE: ¾" = 1'-0" S-4

NOTE: SAWCUT AND REMOVE TOP PORTION OF EXIST SANITARY PIPE AS REQD FOR INSTALLATION OF PIPE CAP AND ENCLOSURE.

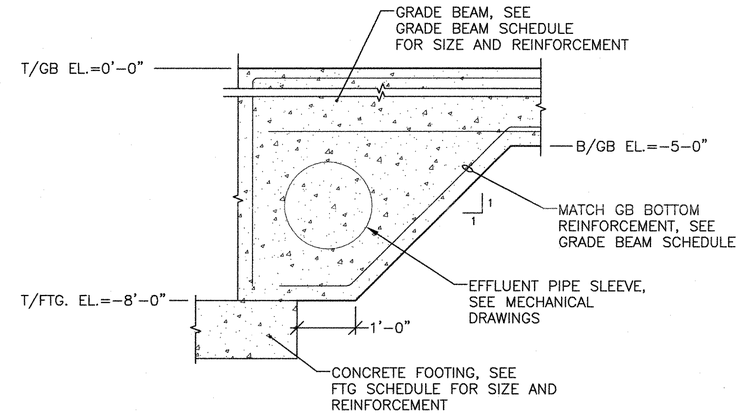

THICKENED GRADE BEAM (S3)

SCALE: ¾" = 1'-0" S-4

NOTE: PROVIDE SLEEVE AT GRADE BEAM ALONG EAST WALL FOR EFFLUENT PIPE (REF S6/S-3). SEE MECH DRAWINGS AND COORDINATE LOCATION WITH MECHANICAL CONTRACTOR.

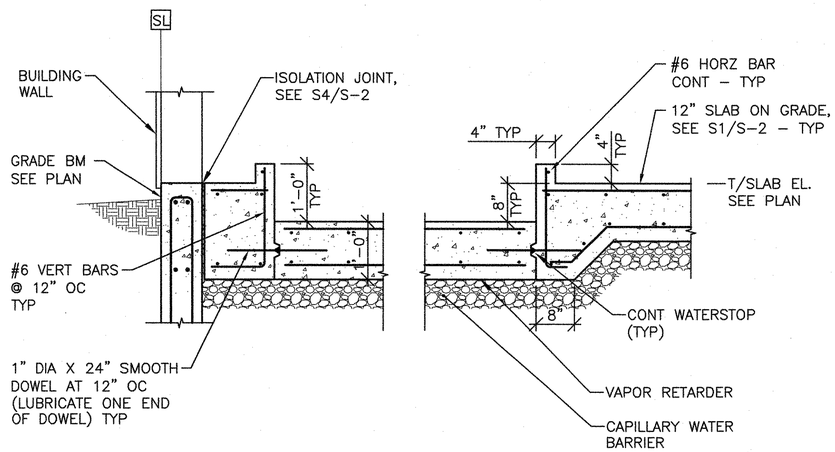

FLOOR RECESS/CURB AT TANK RM (S4)

SCALE: ¾" = 1'-0" S-2

NASSAU COUNTY DEPARTMENT OF HEALTH
DIVISION OF ENVIRONMENTAL HEALTH
These plans are hereby approved
SHEET 24 OF 69
See first sheet hereof for date and signature

UNAUTHORIZED ALTERATION OR ADDITION TO THIS PLAN IS A VIOLATION OF SECTION 7209 OF THE NEW YORK STATE EDUCATION LAW, UNLESS THE PERSON IS ACTING UNDER THE DIRECTION OF A LICENSED PROFESSIONAL ENGINEER. ANY PLAN ALTERATIONS BY ANOTHER ENGINEER MUST BE MARKED AS SUCH, INCLUDING THE SIGNATURE AND SEAL OF THE ALTERING ENGINEER.

CAUTION: IF SHEET IS LESS THAN 34"x22" USE GRAPHIC SCALE

SYM	DESCRIPTION	DATE	APPR
1	APPROVAL SUBMISSION	1/30/12	

NAVFAC

STATE OF NEW YORK · DANIEL ROY · 084560 · LICENSED PROFESSIONAL ENGINEER

DES	SEH	DR	SEH
REVIEWED BY		ATC	
PM/DM		DB	
CHIEF ENG/ARCH		DRH	

DEPARTMENT OF THE NAVY
NAVAL FACILITIES ENGINEERING COMMAND
NORTHEAST IPT
NAVAL FACILITIES ENGINEERING COMMAND ~ MID-ATLANTIC
NAVAL STATION - NORFOLK, VIRGINIA

AQUA NY

NASSAU COUNTY, NEW YORK

MODIFICATIONS TO WATER TREATMENT FACILITY

STRUCTURAL DETAILS

CODE ID. NO. 80091	SIZE D
SCALE:	AS NOTED
MAXIMO NO. N62470-08-D-1001	
JOB ORDER NO. WE-25	
SPEC. NO.	
CONSTR. CONTR. NO.	112G02223
NAVFAC DRAWING NO.	
SHEET	OF --

S-4

NOV 07

24

TABLE A - REINFORCEMENT TENSION LAPS AND EMBEDMENT
fy= 60,000 psi, f'c= 4,000 psi

BAR SIZE (US)	EMBEDMENT AND CLASS A LAP (in)				EMBEDMENT AND CLASS B LAP (in)			
	TOP BAR		OTHER BAR		TOP BAR		OTHER BAR	
	CASE 1	CASE 2	CASE 1	CASE 2	CASE 1	CASE 2	CASE 1	CASE 2
3	19	27	15	20	24	36	19	27
4	26	38	19	30	33	48	26	38
5	30	46	24	36	42	64	31	46
6	38	55	30	43	48	73	38	55
7	55	82	42	62	71	107	55	81
8	62	93	48	70	82	121	62	93
9	71	104	54	82	92	137	71	104
10	80	118	62	92	102	154	80	118
11	87	130	68	100	115	170	87	130

NOTES FOR USE WITH "TABLE A"

1. "TABLE A" PRESENTS LENGTHS OF TENSION DEVELOPMENT LENGTHS AND TENSION LAP SPLICE LENGTHS BASED ON ACI 318-05, SECTION 12.2.2.

2. CLASS A LAP LENGTHS APPLY WHERE BAR LAPS ARE STAGGERED TO LAP HALF THE BARS AT THE SAME LOCATION OR WHEN BARS ARE LAPPED AT A LOCATION WHERE THE REINFORCEMENT AREA PROVIDED IS AT LEAST TWICE THAT REQUIRED.

3. CLASS B LAP LENGTHS APPLY WHEN ALL BARS ARE SPLICED AT A LOCATION OF MAXIMUM STRESS IN THE BARS.

4. CASE 1 LENGTHS APPLY TO BEAMS AND COLUMNS WITH CONCRETE COVER EQUAL TO OR GREATER THAN THE BAR DIAMETER, CLEAR BAR SPACING EQUAL TO OR GREATER THAN THE BAR DIAMETER AND WITH STIRRUPS OR TIES NOT LESS THAN THE CODE MINIMUM THROUGHOUT THE LENGTH IN THE TABLE; AND FOR OTHER ELEMENTS WITH CONCRETE COVER EQUAL TO OR GREATER THAN THE BAR DIAMETER AND CLEAR SPACING EQUAL TO OR GREATER THAN TWO TIMES THE BAR DIAMETER.

5. CASE 2 LENGTHS APPLY TO BEAMS AND COLUMNS WITH CONCRETE COVER LESS THAN THE BAR DIAMETER, AND CLEAR BAR SPACING LESS THAN THE BAR DIAMETER; AND FOR OTHER ELEMENTS WITH CONCRETE COVER LESS THAN THE BAR DIAMETER AND CLEAR BAR SPACING LESS THAN TWO TIMES THE BAR DIAMETER.

FOUNDATION NOTES

1. AT THE START OF CONSTRUCTION, ALL EXISTING VEGETATION, ROOTS, AND TOPSOIL SHOULD BE REMOVED IN THEIR ENTIRETY FROM THE PROPOSED BUILDING AREA. FOLLOWING ROUGH GRADING, AND PRIOR TO ANY STRUCTURAL FILL/BACKFILL PLACEMENT, THE BUILDING AREA SHOULD BE PROOF-ROLLED IN THE PRESENCE OF A QUALIFIED SOILS TECHNICIAN WITH A MINIMUM 10-TON SMOOTH WHEELED ROLLER, OR OTHER APPROVED EQUIPMENT.

2. IN SUBGRADE AREAS TO RECEIVE STRUCTURAL FILL, THE EXPOSED SUBGRADE AREAS SHOULD BE COMPACTED TO A VISUALLY FIRM AND STABLE CONDITION. ANY LOCALIZED SOFT AND/OR EXCESSIVELY WET AREAS ENCOUNTERED DURING THIS PROGRAM THAT CANNOT BE ADEQUATELY STABILIZED AND COMPACTED SHOULD BE UNDERCUT AND REPLACED IN ACCORDANCE WITH THE COMPACTED STRUCTURAL FILL RECOMMENDATIONS.

3. ALL STRUCTURAL LOAD-BEARING FILL/BACKFILL MATERIAL REQUIRED TO BRING STRUCTURAL BUILDING AREAS TO GRADE, AND TO BACKFILL UTILTY TRENCHES WITHIN SLAB AREAS, SHOULD BE A WELL-GRADED GRANULAR MATERIAL CONTAINING NO ORGANIC OR OTHER DELETERIOUS MATERIALS. THE GRANULAR SOILS OF STRATUM A (REFER TO SITE GEOTECHNICAL REPORT) ARE CONSIDERED SUITABLE FOR USE AS STRUCTURAL FILL. IMPORTED STRUCTURAL FILL SHOULD MEET THE USCS CLASSIFICATION OF SW, SP, OR SM, AND SHOULD HAVE NO MORE THAN 25% MATERIAL RETAINED ON A No. 200 SIEVE. AASHTO No. 57 STONE COULD ALSO BE UTILIZED AS STRUCTURAL FILL AT LOCATIONS APPROVED BY THE GEOTECHNICAL ENGINEER, AND CAN BE CONSIDERED FOR LOCALIZED, RELATIVELY DEEP FILLS, SUCH AS FOUNDATION UNDERCUTS AND UTILITY TRENCHES.

Native excavated soils used as backfill on exterior side of grade beams/piers only, and compacted to 95% using standard proctor method, per response to RFI-034 (9/05/2013).

4. STRUCTURAL FILL MATERIAL SHOULD BE PLACED IN HORIZONTAL THIN LIFTS WITH A COMPACTED THICKNESS NO GREATER THAN 8 INCHES. EACH THIN LIFT OF FILL/BACKFILL MATERIAL PLACED BELOW STRUCTURAL ELEMENTS SHOULD BE COMPACTED TO A MINIMUM 95% OF ITS MAXIMUM DRY DENSITY, AS DETERMINED BY THE MODIFIED PROCTOR TEST (ASTM D1557). FILL LIFTS FOR HAND TAMPERS SHOULD NOT EXCEED 4 INCHES.

5. ALL FOUNDATIONS SHOULD BE PLACED ON DRY, NON-FROZEN, FIRM SOIL. WHEN EXCESSIVELY WET OR FROZEN SOIL IS ENCOUNTERED AT THE FOOTING BASE, THIS MATERIAL SHOULD BE UNDERCUT TO SUITABLE BEARING MATERIALS. THE UNDERCUT ZONE MAY BE REPLACED IN ACCORDANCE WITH THE COMPACTED STRUCTURAL FILL RECOMMENDATIONS OR WITH LEAN CONCRETE. DURING EXCAVATION OF INDIVIDUAL FOOTINGS, DISTURBANCE OF THE SUBGRADE SOILS MAY OCCUR; THEREFORE, COMPACTION OF THE FOOTING SUBGRADES PRIOR TO PLACEMENT OF ANY REINFORCING STEEL OR CONCRETE SHOULD BE PERFORMED.

6. ALL FOOTING EXCAVATIONS SHOULD BE REVIEWED TO VERIFY THE QUALITY OF THE BEARING MATERIAL. FOOTING EXCAVATIONS SHOULD BE REVIEWED BY A QUALIFIED GEOTECHNICAL TECHNICIAN WORKING UNDER THE SUPERVISION OF A GEOTECHNICAL ENGINEER WHO IS FAMILIAR WITH THE RECOMMENDATIONS OF THIS PROJECT. SUBGRADE REVIEW SHOULD BE PERFORMED PRIOR TO PLACEMENT OF REINFORCING STEEL OR CONCRETE AND SHOULD VERIFY THE PRESENCE OF SUITABLE BEARING SOILS.

7. A MINIMUM 10-MIL POLYETHYLENE VAPOR RETARDER AND FREE-DRAINING SUBBASE, CONSISTING OF AT LEAST 6 INCHES OF POORLY GRADED CRUSHED STONE AGGREGATE SHOULD BE PROVIDED BENEATH ALL FLOOR SLABS.

GENERAL NOTES

1. DESIGN LOADS
   a. GROUND SNOW LOAD:-------------20 PSF
   b. WIND LOADS:-------------------ASCE 7-05.
      BASIC WIND SPEED (3-SECOND GUST) = 120 MPH
      WIND IMPORTANCE FACTOR = 1.0
      EXPOSURE CATEGORY "C".
   c. SEISMIC: UFC 3-310-01

      SEISMIC IMPORTANCE FACTOR: 1.0
      SEISMIC USE GROUP: II

      MAPPED SPECTRAL RESPONSE ACCELERATIONS:
      Ss: .32g
      S_1: .06g

      SITE CLASS: D
      SEISMIC DESIGN CATEGORY: B

      BASIC SEISMIC-FORCE RESISTING SYSTEMS:

      ORDINARY STEEL CROSS BRACES
      ORDINARY STEEL PORTAL BRACES

ABBREVIATIONS

A.B.	–	ANCHOR BOLTS
ACI	–	AMERICAN CONCRETE INSTITUTE
ADMIN	–	ADMINISTRATION
AFF	–	ABOVE FINISH FLOOR
ASTM	–	AMERICAN SOCIETY FOR TESTING AND MATERIALS
ASCE	–	AMERICAN SOCIETY OF CIVIL ENGINEERS
ARCH	–	ARCHITECTURAL
B	–	BOTTOM
CL	–	CENTER LINE
CLR	–	CLEAR
CJ	–	CONSTRUCTION JOINT
CONC	–	CONCRETE
CONN	–	CONNECTION
CONT	–	CONTINUOUS
CONSTR	–	CONSTRUCTION
CMU	–	CONCRETE MASONRY UNIT
DET	–	DETAIL
DIA	–	DIAMETER
DL	–	DEAD LOAD
DWG	–	DRAWING
DWLS	–	DOWELS
EF	–	EACH FACE
EL	–	ELEVATION
EMBED	–	EMBEDMENT
EXIST	–	EXISTING
EXTN	–	EXTENSION
EXTR	–	EXTERIOR
EQ	–	EQUAL
EW	–	EACH WAY
FD	–	FLOOR DRAIN
FTG	–	FOOTING
FLR	–	FLOOR
GALV	–	GALVANIZED
GB	–	GRADE BEAM
HS	–	HEADED STUD
INFO	–	INFORMATION
LL	–	LIVE LOAD
Iw	–	IMPORTANCE FACTOR, WIND
LG	–	LONG
MAINT	–	MAINTENANCE
MAX	–	MAXIMUM
MFR	–	MANUFACTURER
MIN	–	MINIMUM
MPH	–	MILES PER HOUR
NTS	–	NOT TO SCALE
OH	–	OVERHEAD
PL	–	PLATE
PLBG	–	PLUMBING
PSI	–	POUNDS PER SQUARE INCH
PSF	–	POUNDS PER SQUARE FOOT
REF	–	REFERENCE
REINF	–	REINFORCING
REQD	–	REQUIRED
S	–	SLOPES
SIM	–	SIMILAR
SP	–	SPACED
SPEC	–	SPECIFICATION
T	–	TOP
TO	–	TOP OF
TOS	–	TOP OF SLAB
TYP	–	TYPICAL
UNO	–	UNLESS NOTED OTHERWISE
UFC	–	UNITED FACILITIES CRITERIA
VERT	–	VERTICAL

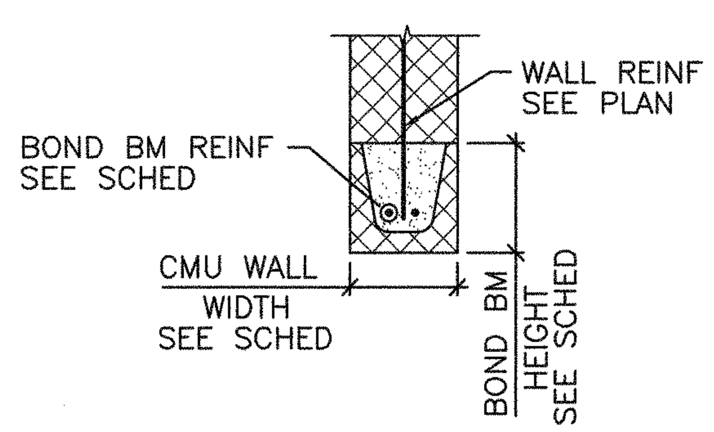

CMU BOND BEAM LINTEL SCHEDULE			
MARK	WALL WIDTH	BOND BEAM HEIGHT	REINFORCING
L1	8"	16"	2-#5 BARS
L2	8"	24"	2-#5 BARS

* SEE ARCH PLANS, WALL SECTIONS AND HEAD DETAILS FOR LOCATIONS
* BOND BM LINTELS TO BEAR 8" MIN EA END ON SOLID MASONRY

LINTEL SCHEDULE
SCALE: NTS S-5

NASSAU COUNTY DEPARTMENT OF HEALTH
DIVISION OF ENVIRONMENTAL HEALTH
These plans are hereby approved
SHEET 25 OF 69
See first sheet hereof for date and signature

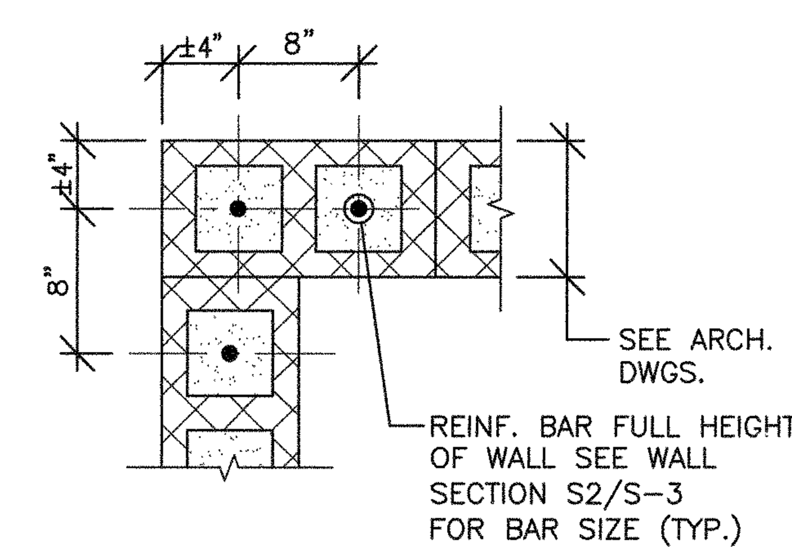

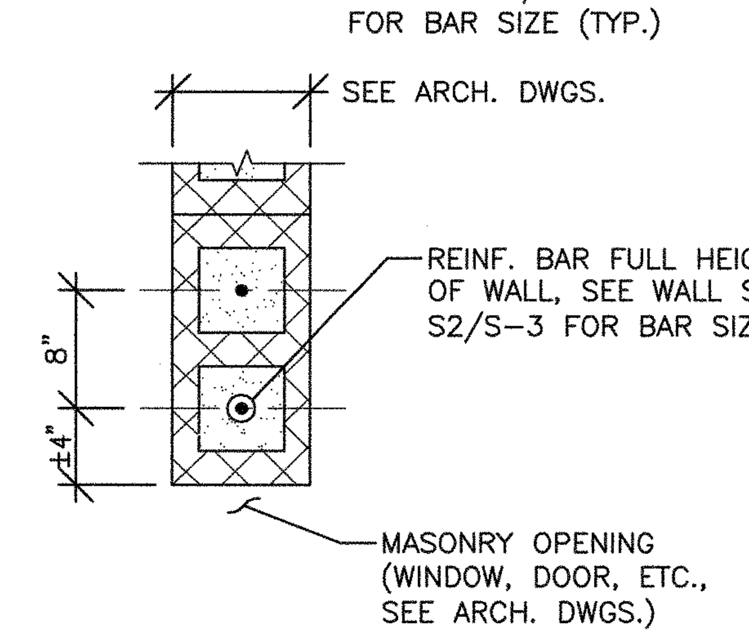

CMU WALL REINFORCING AT MASONRY OPNG AND CORNER (S3)
SCALE: NTS S-5

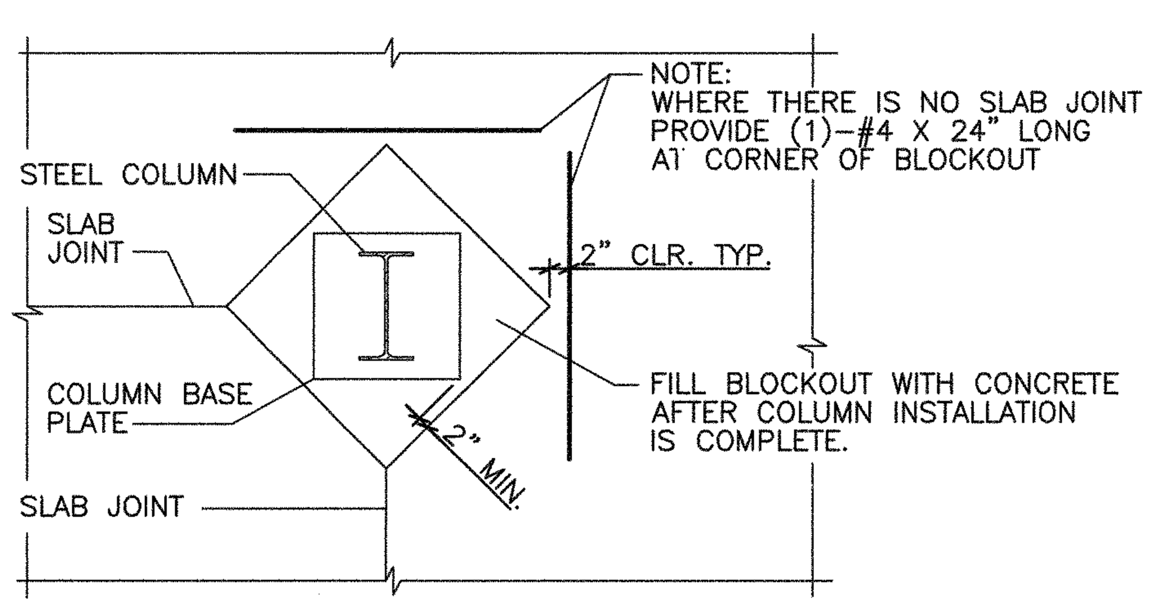

TYP REINF AT CONC SLAB BLOCKOUT FOR STEEL COLUMNS - DETAIL (S1)
SCALE: NTS S-5

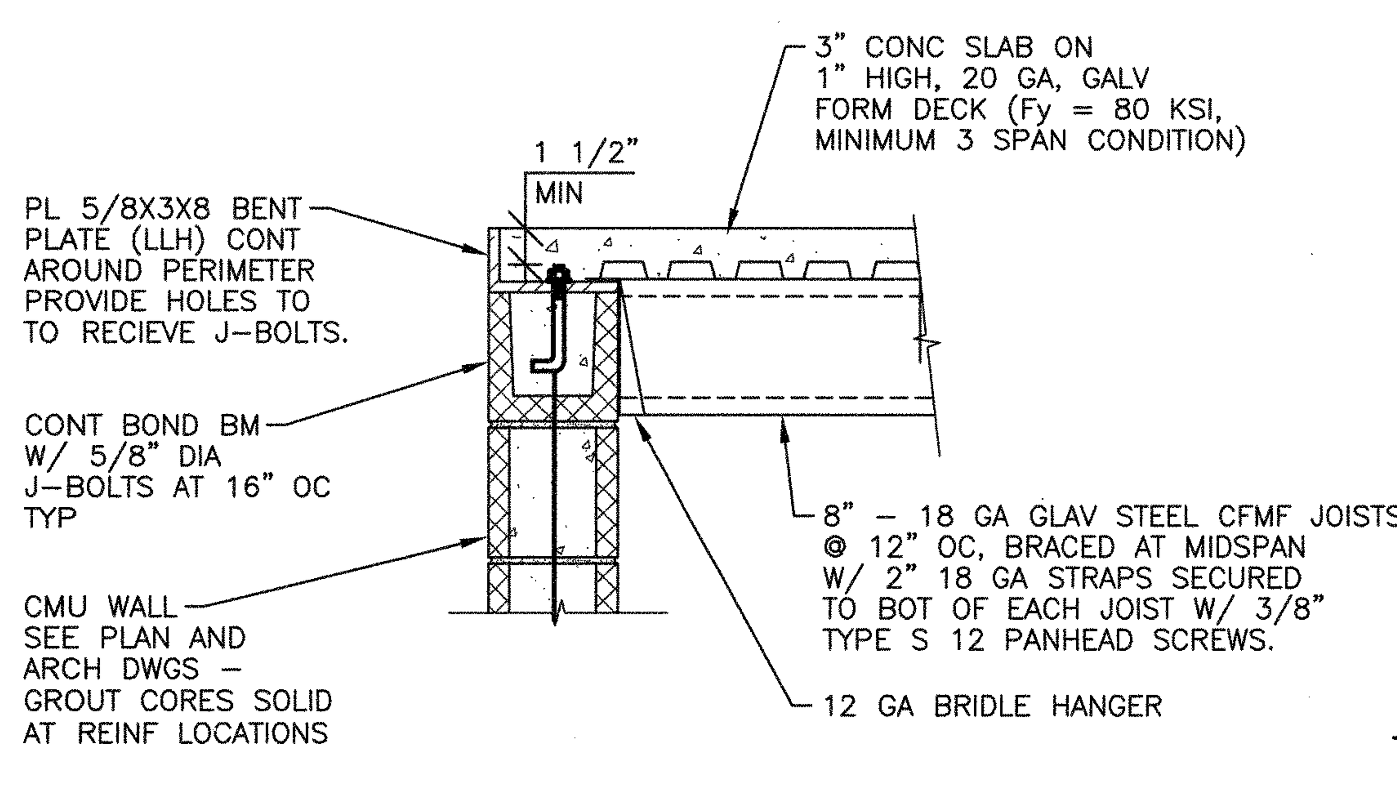

CFMF JOIST BEARING DETAIL (S2)
SCALE: 1" = 1'-0" S-5
NOTE: SEE ARCH DRAWINGS FOR LOCATIONS

UNAUTHORIZED ALTERATION OR ADDITION TO THIS PLAN IS A VIOLATION OF SECTION 7209 OF THE NEW YORK STATE EDUCATION LAW, UNLESS THE PERSON IS ACTING UNDER THE DIRECTION OF A LICENSED PROFESSIONAL ENGINEER. ANY PLAN ALTERATIONS BY ANOTHER ENGINEER MUST BE MARKED AS SUCH, INCLUDING THE SIGNATURE AND SEAL OF THE ALTERING ENGINEER.

CAUTION: IF SHEET IS LESS THAN 34"x22" USE GRAPHIC SCALE

STATE OF NEW YORK · DANIEL ROY ... · LICENSED PROFESSIONAL ENGINEER · 084560

NASSAU COUNTY DEPT. OF HEALTH SUBMITTAL 9/9/2011
SYM | DESCRIPTION | DATE | APPR

DES SEH | DR SEH
REVIEWED BY ATC
PM/DM DB
CHIEF ENG/ARCH DRH

DEPARTMENT OF THE NAVY
NAVAL FACILITIES ENGINEERING COMMAND
NAVAL FACILITIES ENGINEERING COMMAND ~ MID-ATLANTIC
NAVAL STATION - NORFOLK, VIRGINIA
NORTHEAST IPT
AQUA NY
NASSAU COUNTY, NEW YORK
MODIFICATIONS TO WATER TREATMENT FACILITY
GEN. NOTES, SCHEDULES AND DETAILS

CODE ID. NO. 80091 | SIZE D
SCALE: AS NOTED
MAXIMO NO. N62470-08-D-1001
JOB ORDER NO. WE-25
SPEC. NO.
CONSTR. CONTR. NO. 112G02223
NAVFAC DRAWING NO.
SHEET OF --
S-5

25

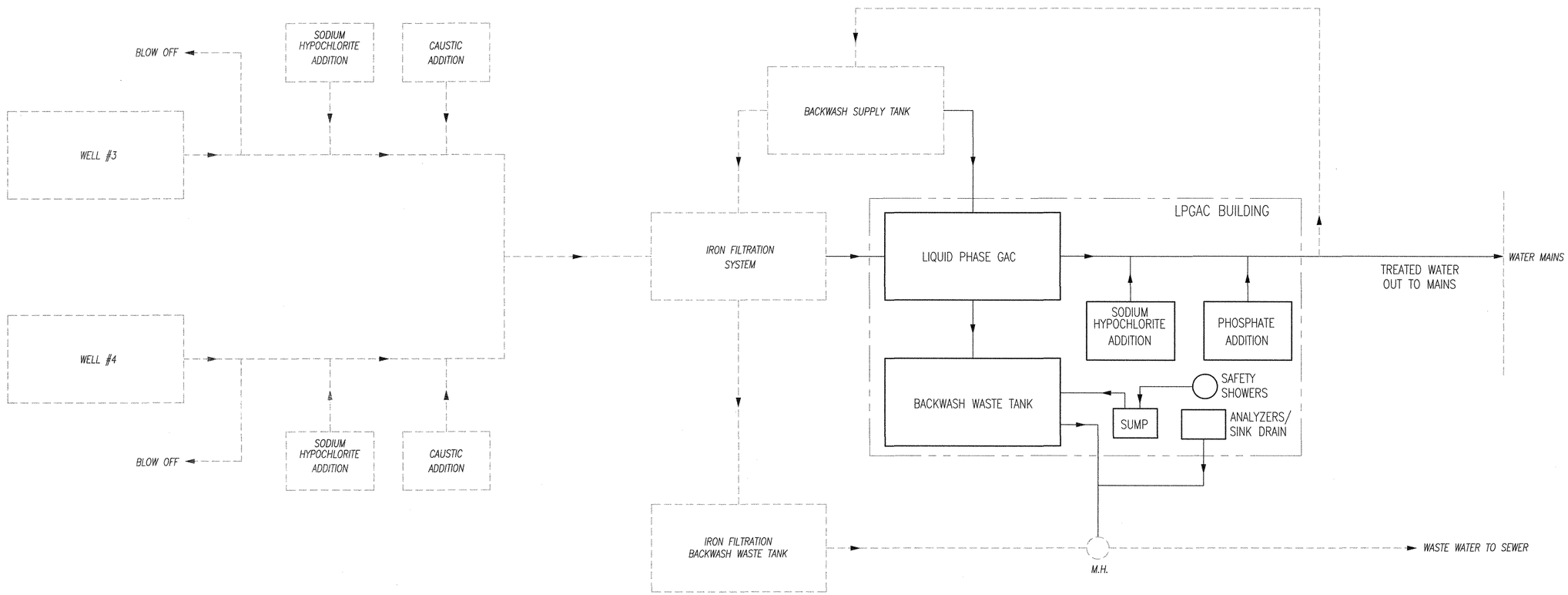

BLOCK PROCESS FLOW DIAGRAM

EXISTING PROCESSES / BUILDINGS

PROPOSED PROCESSES / BUILDINGS

NASSAU COUNTY DEPARTMENT OF HEALTH
DIVISION OF ENVIRONMENTAL HEALTH
These plans are hereby approved
SHEET 26 OF 69
See first sheet hereof for date and signature

UNAUTHORIZED ALTERATION OR ADDITION TO THIS PLAN IS A VIOLATION OF SECTION 7209 OF THE NEW YORK STATE EDUCATION LAW, UNLESS THE PERSON IS ACTING UNDER THE DIRECTION OF A LICENSED PROFESSIONAL ENGINEER. ANY PLAN ALTERATIONS BY ANOTHER ENGINEER MUST BE MARKED AS SUCH, INCLUDING THE SIGNATURE AND SEAL OF THE ALTERING ENGINEER.

CAUTION: IF SHEET IS LESS THAN 34"x22" USE GRAPHIC SCALE

SYM	DESCRIPTION	DATE	APPR
	NASSAU COUNTY DEPT. OF HEALTH SUBMITTAL	9/9/2011	

NAVFAC

STATE OF NEW YORK
DAVID DANIEL BRADY
080836
LICENSED PROFESSIONAL ENGINEER

DES	HKM	DR	SNL
REVIEWED BY	HKM		
PM/DM	DDB		
CHIEF ENG/ARCH	HKM		

DEPARTMENT OF THE NAVY
NAVAL FACILITIES ENGINEERING COMMAND
NORTHEAST IPT
AQUA NY

NAVAL FACILITIES ENGINEERING COMMAND ~ MID-ATLANTIC
NAVAL STATION - NORFOLK, VIRGINIA

NASSAU COUNTY, NEW YORK
MODIFICATIONS TO WATER TREATMENT FACILITY

PROCESS FLOW DIAGRAM

CODE ID. NO. 80091	SIZE D
SCALE:	NTS
MAXIMO NO. N62470-08-D-1001	
JOB ORDER NO. WE-25	
SPEC. NO.	
CONSTR. CONTR. NO. 112G02223	
NAVFAC DRAWING NO.	
SHEET	OF --

PFD-1

26 NOV 07 2012

K:\112G02223 - Aqua Bethpage-Way Project - R. Mital\Drawings\Mechanical\02223_PFD-1.dwg 09/09/2011 14:17

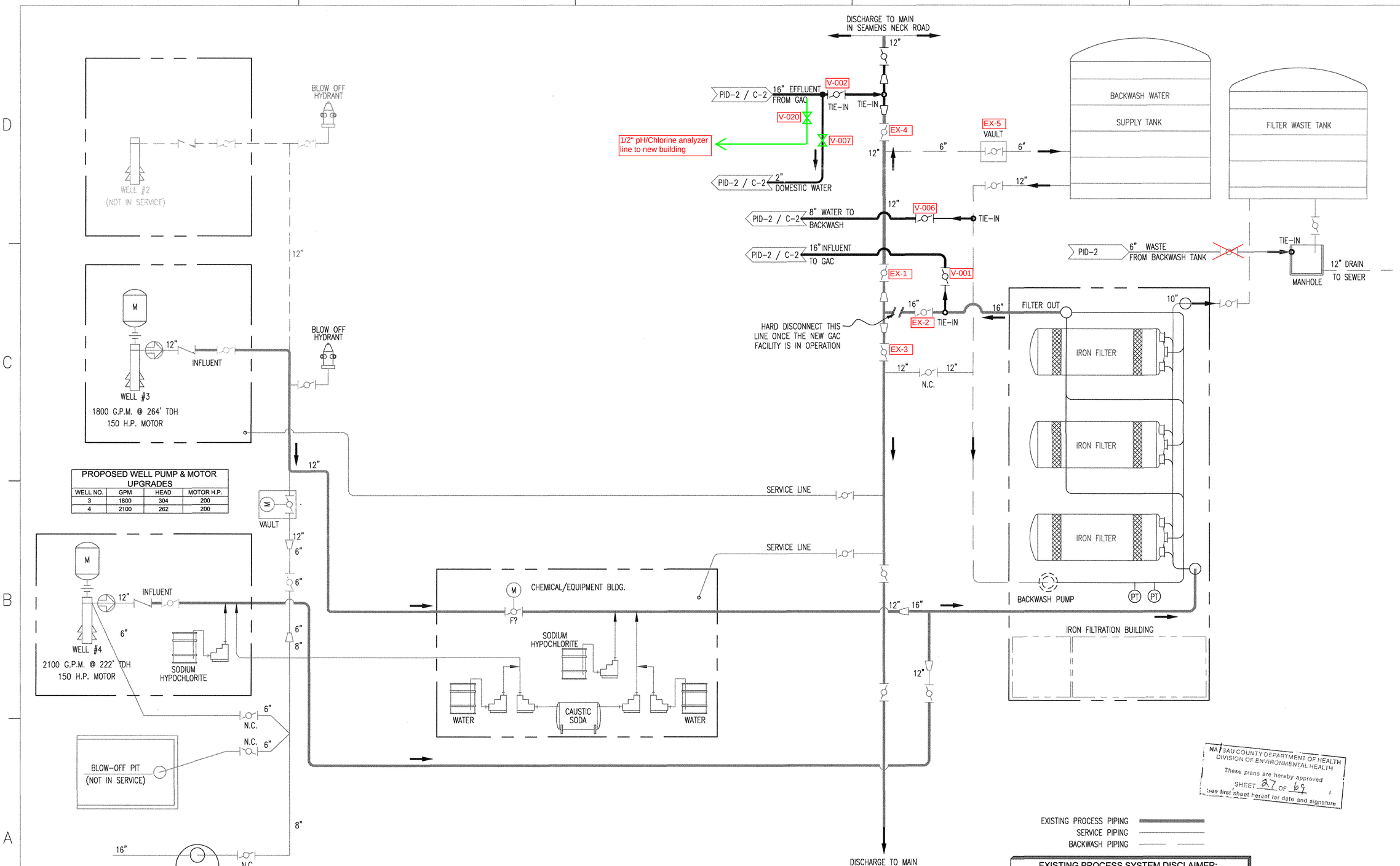

PROPOSED WELL PUMP & MOTOR UPGRADES			
WELL NO.	GPM	HEAD	MOTOR H.P.
3	1800	304	200
4	2100	262	200

NASSAU COUNTY DEPARTMENT OF HEALTH
DIVISION OF ENVIRONMENTAL HEALTH
These plans are hereby approved
SHEET 27 OF 69
See first sheet hereof for date and signature

UNAUTHORIZED ALTERATION OR ADDITION TO THIS PLAN IS A VIOLATION OF SECTION 7209 OF THE NEW YORK STATE EDUCATION LAW, UNLESS THE PERSON IS ACTING UNDER THE DIRECTION OF A LICENSED PROFESSIONAL ENGINEER. ANY PLAN ALTERATIONS BY ANOTHER ENGINEER MUST BE MARKED AS SUCH, INCLUDING THE SIGNATURE AND SEAL OF THE ALTERING ENGINEER.

EXISTING PROCESS SYSTEM DISCLAIMER:
THE EXISTING PROCESS IS SHOWN TO THE EXTENT REQUIRED FOR TIE-IN. ACCURACY OF THE EXISTING SYSTEM IS NOT GUARANTEED. THE CONTRACTOR IS RESPONSIBLE FOR VERIFYING THE NECESSARY DETAIL COMPONENTS OF THE SYSTEM.

CAUTION: IF SHEET IS LESS THAN 34"x22" USE GRAPHIC SCALE

APPROVAL SUBMISSION, REV 1 — 6/11/12

NAVFAC

STATE OF NEW YORK — DAVID DANIEL BRACK — 080336 — LICENSED PROFESSIONAL ENGINEER

DES HKM | DR SNL
REVIEWED BY HKM
PM/DM
CHIEF ENG/ARCH HKM

DEPARTMENT OF THE NAVY
NAVAL FACILITIES ENGINEERING COMMAND
NAVAL FACILITIES ENGINEERING COMMAND ~ MID-ATLANTIC
NORTHEAST PT — NAVAL STATION - NORFOLK, VIRGINIA

AQUA NY — NASSAU COUNTY, NEW YORK
MODIFICATIONS TO WATER TREATMENT FACILITY

P&ID - EXISTING SYSTEM TIE-IN

CODE ID. NO. 80091 | SIZE D
SCALE: NTS
MAXIMO NO. N62470-08-D-1001
JOB ORDER NO. WE-25
SPEC. NO.
CONSTR. CONTR. NO. 112G02223
NAVFAC DRAWING NO.
SHEET OF
PID-1

27 NOV 07 2012

K:\112G02223 - Aqua Bethpage-Navy Project - H. Mitai\Drawings\Mechanical\02223_PID-1.dwg 06/07/2012 10:00

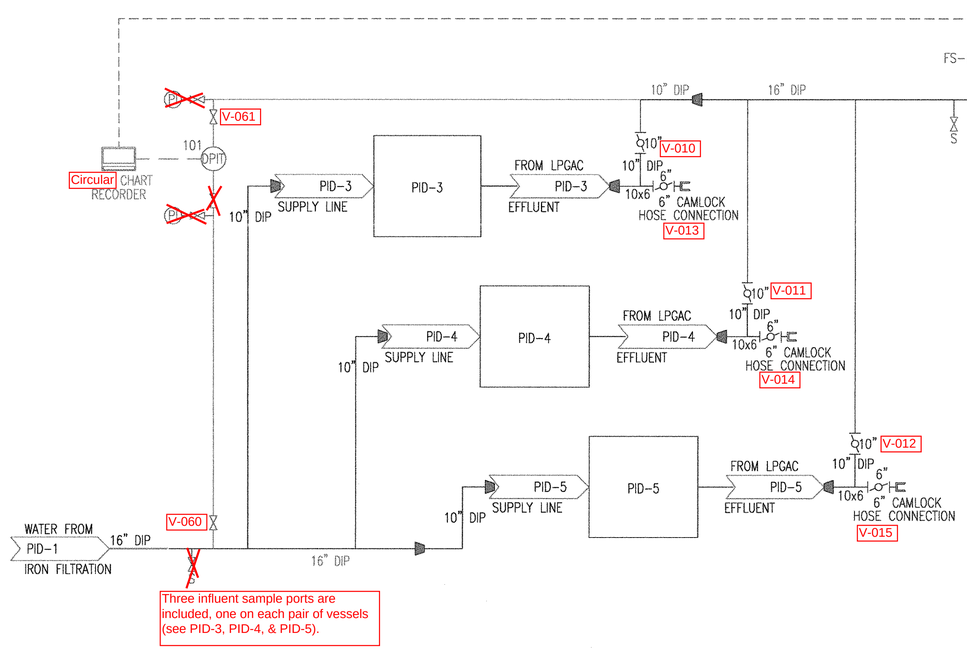

NOTE: SEE DRAWINGS M-6 & M-6.1 FOR FURTHER DETAILS.

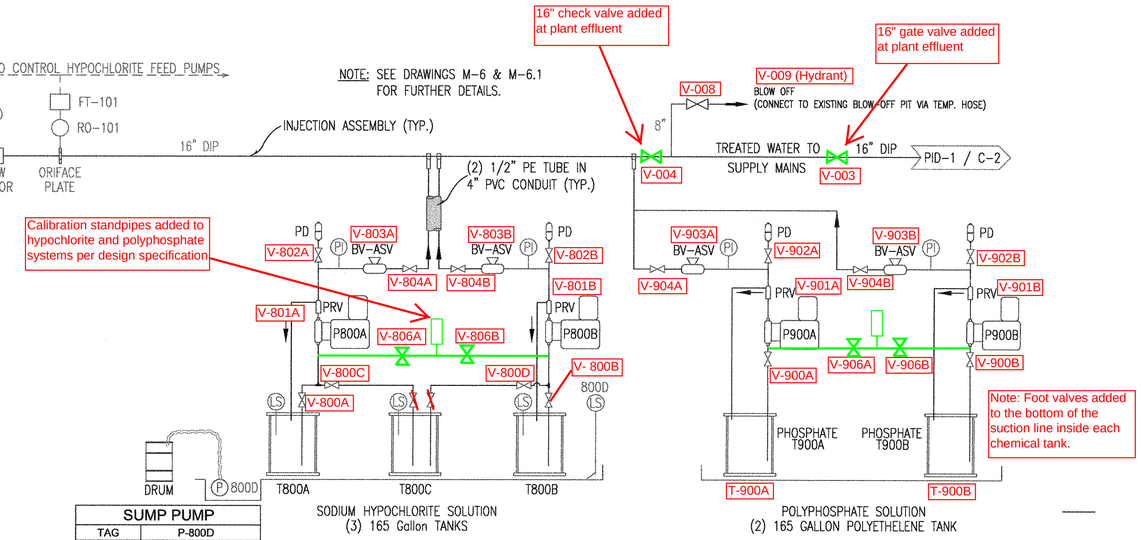

SUMP PUMP	
TAG	P-800D
TYPE	115 VAC MANUAL W/ DEADMAN SWITCH
H.P.	FRACTIONAL
FLOW	20 GPM
TDH	20 Ft

PRV – PRESSURE RELIEF VALVE
PD – PULSATION DAMPER
BV/ASV – BACKPRESSURE/ANTI-SIPHON VALVE

CHEMICAL FEED METERING PUMPS		
	SODIUM HYPOCHLORITE PUMPS	PHOSPHATE PUMPS
TAG	P800 A/B	P-900 A/B
TYPE	METERING PUMP	METERING PUMP
FLOW	2.5 GPH EACH	1 GPH EACH
PRESSURE	150 PSI EACH	150 PSI EACH

NOTE: USE EXISTING PHOSPHATE PUMP (TO BE RELOCATED)

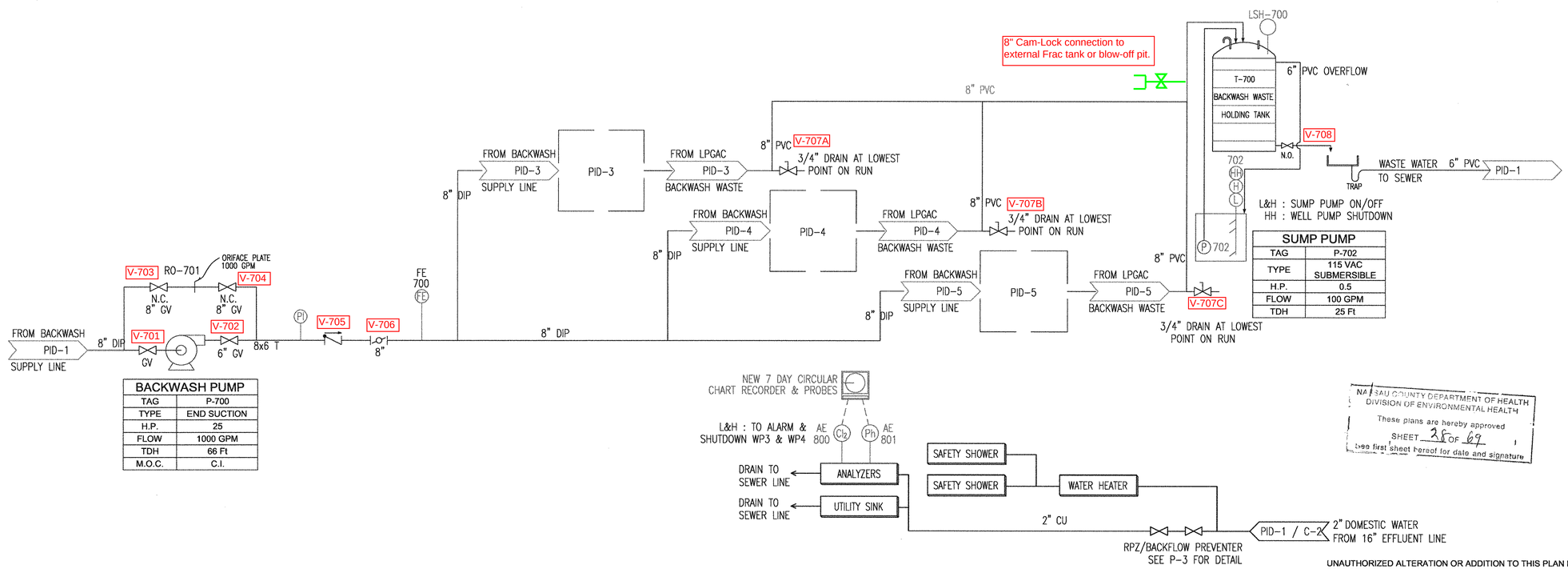

BACKWASH PUMP	
TAG	P-700
TYPE	END SUCTION
H.P.	25
FLOW	1000 GPM
TDH	66 Ft
M.O.C.	C.I.

SUMP PUMP	
TAG	P-702
TYPE	115 VAC SUBMERSIBLE
H.P.	0.5
FLOW	100 GPM
TDH	25 Ft

NASSAU COUNTY DEPARTMENT OF HEALTH
DIVISION OF ENVIRONMENTAL HEALTH
These plans are hereby approved
SHEET 28 OF 69
See first sheet hereof for date and signature

UNAUTHORIZED ALTERATION OR ADDITION TO THIS PLAN IS A VIOLATION OF SECTION 7209 OF THE NEW YORK STATE EDUCATION LAW, UNLESS THE PERSON IS ACTING UNDER THE DIRECTION OF A LICENSED PROFESSIONAL ENGINEER. ANY PLAN ALTERATIONS BY ANOTHER ENGINEER MUST BE MARKED AS SUCH, INCLUDING THE SIGNATURE AND SEAL OF THE ALTERING ENGINEER.

CAUTION: IF SHEET IS LESS THAN 34"x22" USE GRAPHIC SCALE

DATE	DESCRIPTION	APPR
8/30/12	APPROVAL SUBMISSION, REV 1	

DEPARTMENT OF THE NAVY
NAVAL FACILITIES ENGINEERING COMMAND
NORTHEAST IPT
AQUA NY

NAVAL FACILITIES ENGINEERING COMMAND ~ MID-ATLANTIC
NAVAL STATION - NORFOLK, VIRGINIA

NASSAU COUNTY, NEW YORK

MODIFICATIONS TO WATER TREATMENT FACILITY

P&ID

DES HKM | DR SNL
REVIEWED BY HKM
PM/DM
CHIEF ENG/ARCH HKM

CODE ID. NO. 80091 | SIZE D
SCALE: NTS
MAXIMO NO. N62470-08-D-1001
JOB ORDER NO. WE-25
SPEC. NO.
CONSTR. CONTR. NO. 112G02223
NAVFAC DRAWING NO.
SHEET OF

PID-2

K:\112G02223 - Aqua Bellpage-Navy Project - H. Mall\Drawings\Mechanical\02223_PID-2.dwg 08/31/2012 14:47

28
NOV 07 2012

VESSELS 100 & 200

This Drawing Represents the As-Built for GAC Vessels 100 & 200, and replaces drawing PID-3

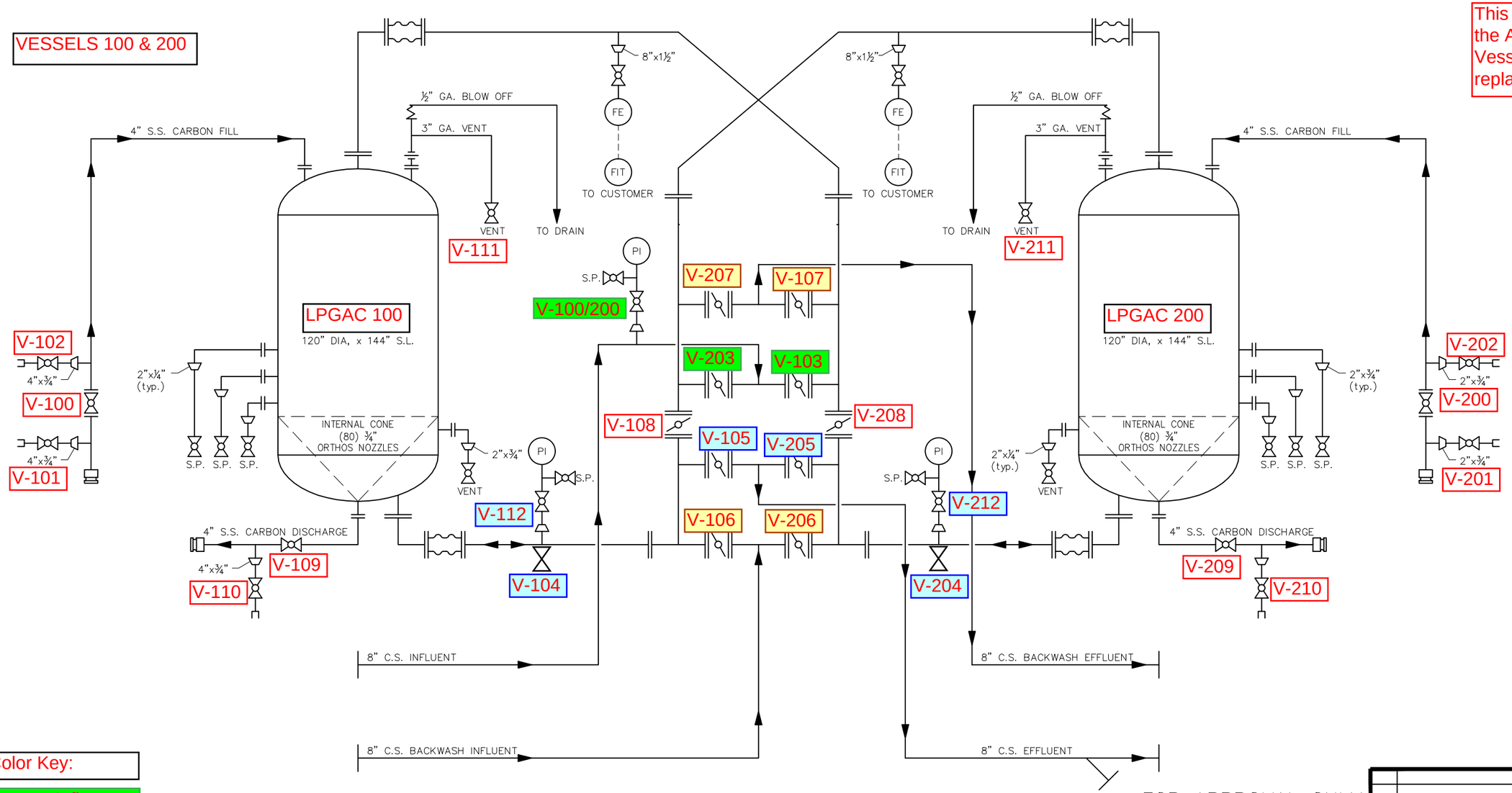

Color Key:

Green - Influent

Blue - Effluent

Brown - Backwash

Red - Other

LEGEND

- EXPANSION JOINT
- REDUCER
- RUPTURE DISK
- BALL VALVE
- FLUSH CONNECTION
- FE — FLOW ELEMENT
- SP — SAMPLE PORT
- AIR RELIEF VALVE
- QUICK CONNECT CAM LOCK FITTING
- MANUALLY OPERATED BUTTERFLY VALVE
- PI — PRESSURE GAUGE
- INLINE STRAINER
- FIT — FLOW INDICATOR TRANSMITTER

FOR APPROVAL ONLY

NO.	REVISION	BY	DATE

PROJECT
AQUA NEW YORK, INC.

WATER TREATMENT FACILITY
SEAMANS NECK ROAD
NASSAU COUNTY, NEW YORK

PROJ. NO.	CS POTA120103
P.O. NO.	N62470-08-D-1006

THIS DRAWING AND DESIGN ARE THE PROPERTY OF TIGG CORP. AND SHALL NOT BE REPRODUCED IN WHOLE OR IN PART, NOR EMPLOYED FOR ANY PURPOSE OTHER THAN SPECIFICALLY PERMITTED IN WRITING BY TIGG CORP. THIS DRAWING LOANED SUBJECT TO RETURN ON DEMAND.

DRAWN BY	JB
DESIGN BY	JI
CHKD. BY	JI
DATE	7/18/12
SCALE	NTS

TIGG corporation

LPGAC SYSTEM
P&ID

DWG. NO. C12-2401

REV. 0

VESSELS 300 & 400

This Drawing Represents the As-Built for GAC Vessels 300 & 400, and replaces drawing PID-4

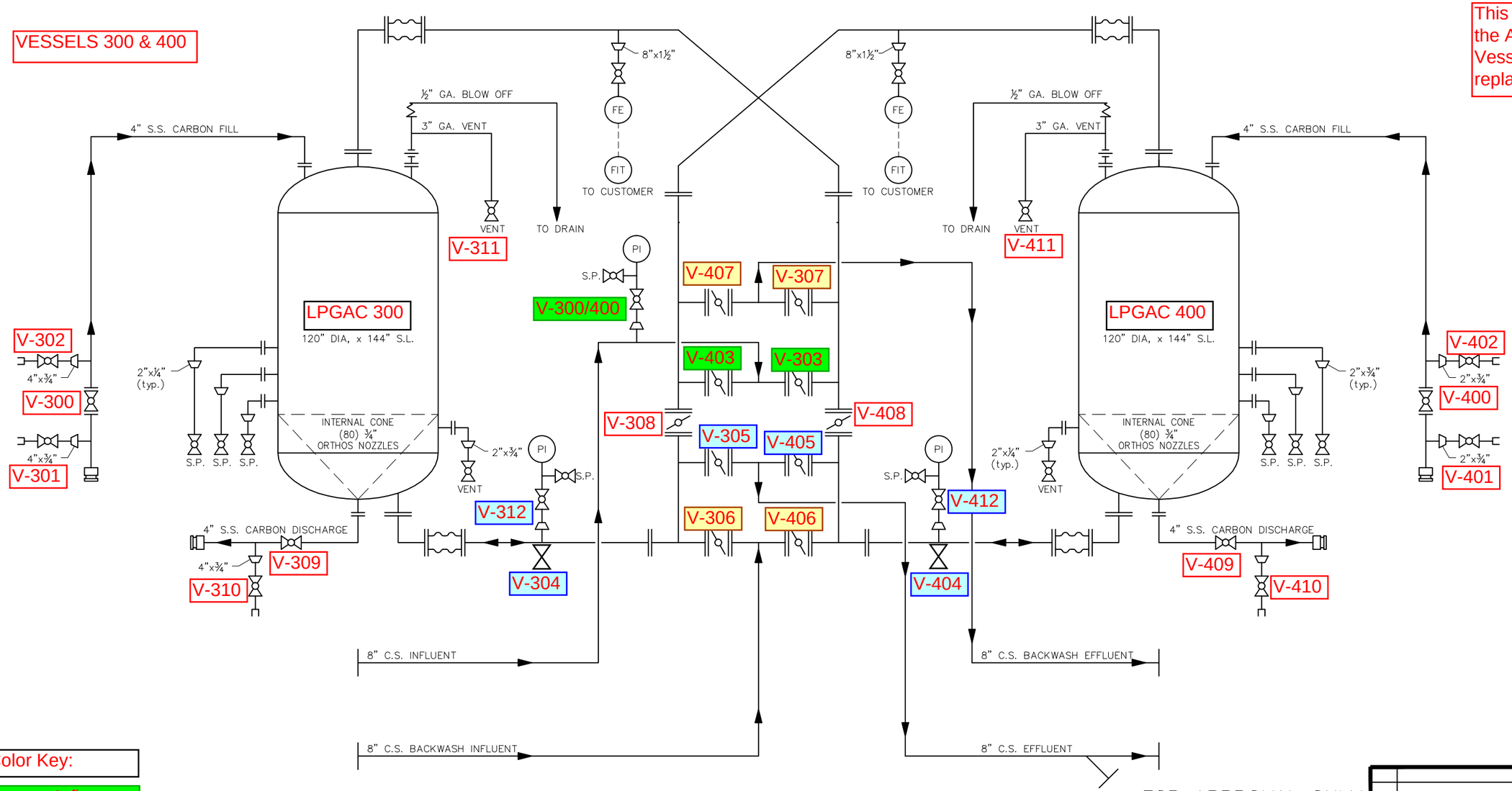

Color Key:

Green - Influent

Blue - Effluent

Brown - Backwash

Red - Other

LEGEND

- EXPANSION JOINT
- REDUCER
- RUPTURE DISK
- BALL VALVE
- FLUSH CONNECTION
- FE — FLOW ELEMENT
- SP — SAMPLE PORT
- AIR RELIEF VALVE
- QUICK CONNECT CAM LOCK FITTING
- MANUALLY OPERATED BUTTERFLY VALVE
- PI — PRESSURE GAUGE
- INLINE STRAINER
- FIT — FLOW INDICATOR TRANSMITTER

FOR APPROVAL ONLY

NO.	REVISION	BY	DATE

PROJECT
AQUA NEW YORK, INC.

WATER TREATMENT FACILITY
SEAMANS NECK ROAD
NASSAU COUNTY, NEW YORK

PROJ. NO.	CS POTA120103
P.O. NO.	N62470-08-D-1006

THIS DRAWING AND DESIGN ARE THE PROPERTY OF TIGG CORP. AND SHALL NOT BE REPRODUCED IN WHOLE OR IN PART, NOR EMPLOYED FOR ANY PURPOSE OTHER THAN SPECIFICALLY PERMITTED IN WRITING BY TIGG CORP. THIS DRAWING LOANED SUBJECT TO RETURN ON DEMAND.

DRAWN BY	JB
DESIGN BY	JI
CHKD. BY	JI
DATE	7/18/12
SCALE	NTS

TIGG corporation

LPGAC SYSTEM
P&ID

DWG. NO. C12-2401

REV. 0

This Drawing Represents the As-Built for GAC Vessels 500 & 600, and replaces drawing PID-5

VESSELS 500 & 600

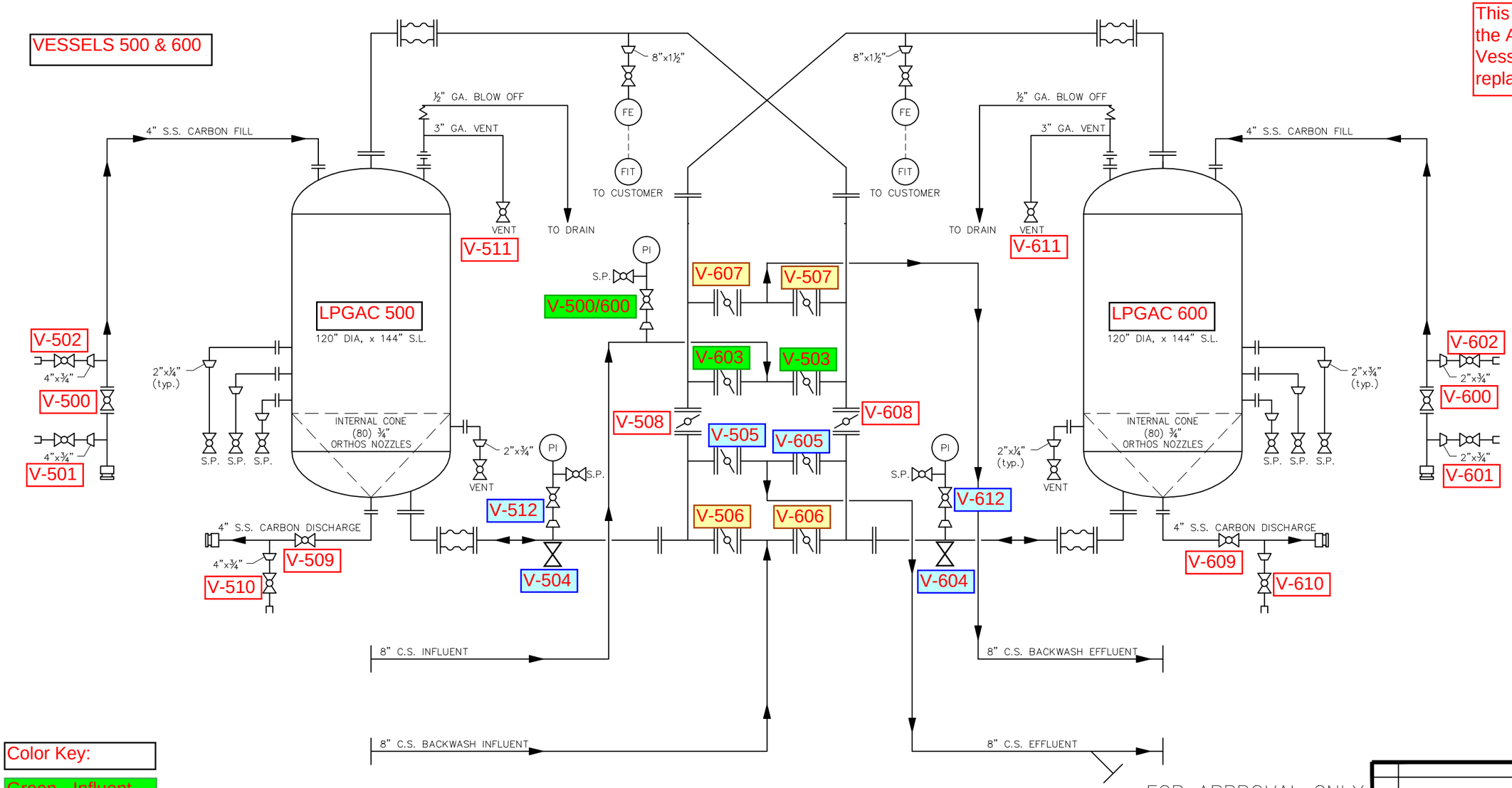

Color Key:

- Green - Influent
- Blue - Effluent
- Brown - Backwash
- Red - Other

LEGEND

- EXPANSION JOINT
- REDUCER
- RUPTURE DISK
- BALL VALVE
- FLUSH CONNECTION
- FE — FLOW ELEMENT
- SP — SAMPLE PORT
- AIR RELIEF VALVE
- QUICK CONNECT CAM LOCK FITTING
- MANUALLY OPERATED BUTTERFLY VALVE
- PI — PRESSURE GAUGE
- INLINE STRAINER
- FIT — FLOW INDICATOR TRANSMITTER

FOR APPROVAL ONLY

NO.	REVISION	BY	DATE

PROJECT
AQUA NEW YORK, INC.

WATER TREATMENT FACILITY
SEAMANS NECK ROAD
NASSAU COUNTY, NEW YORK

PROJ. NO.	CS POTA120103
P.O. NO.	N62470-08-D-1006

THIS DRAWING AND DESIGN ARE THE PROPERTY OF TIGG CORP. AND SHALL NOT BE REPRODUCED IN WHOLE OR IN PART, NOR EMPLOYED FOR ANY PURPOSE OTHER THAN SPECIFICALLY PERMITTED IN WRITING BY TIGG CORP. THIS DRAWING LOANED SUBJECT TO RETURN ON DEMAND.

DRAWN BY	JB
DESIGN BY	JI
CHKD. BY	JI
DATE	7/18/12
SCALE	NTS

TIGG corporation

LPGAC SYSTEM
P&ID

DWG. NO. C12-2401

REV. 0

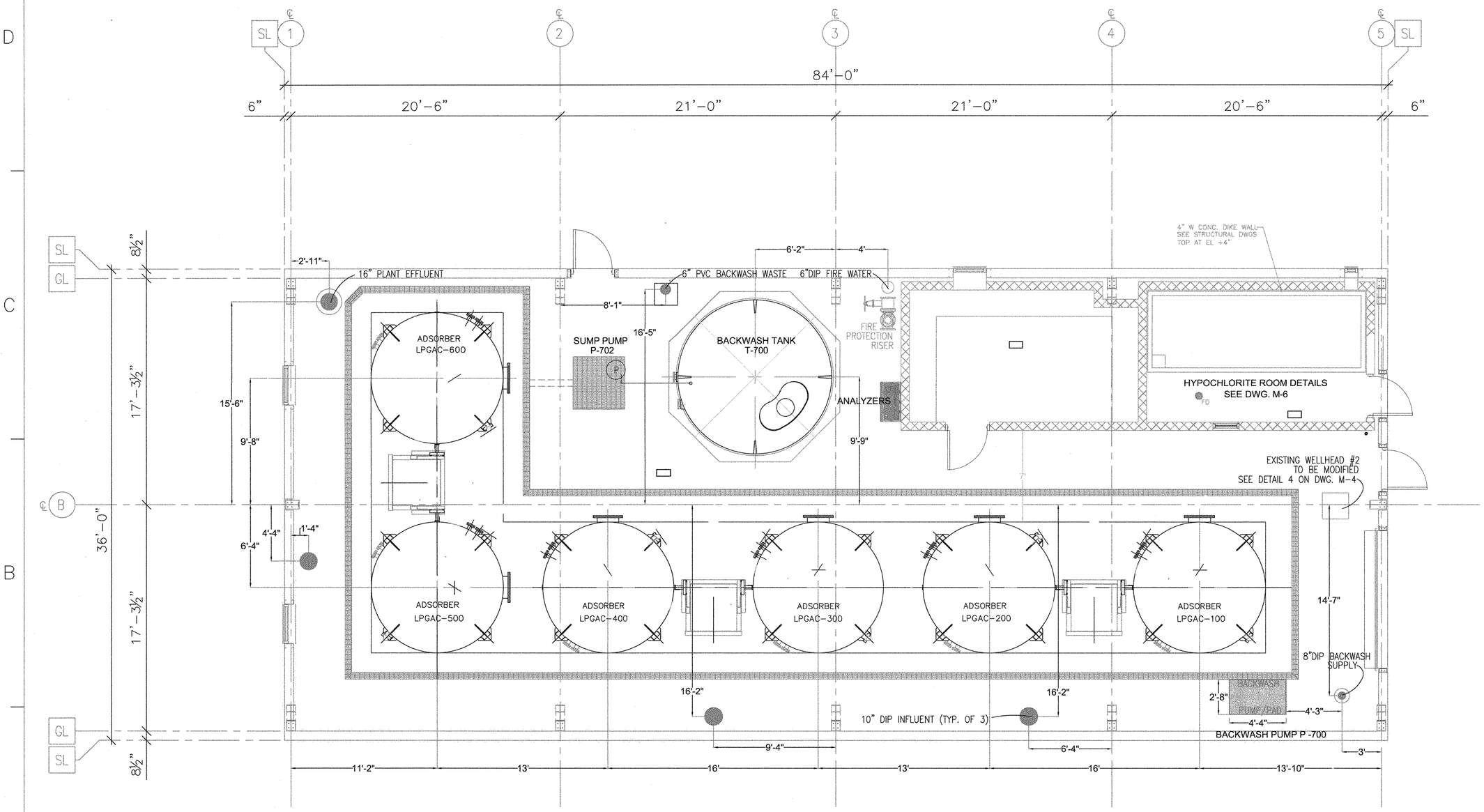

NASSAU COUNTY DEPARTMENT OF HEALTH
DIVISION OF ENVIRONMENTAL HEALTH
These plans are hereby approved
SHEET 32 OF 69
See first sheet hereof for date and signature

UNAUTHORIZED ALTERATION OR ADDITION TO THIS PLAN IS A VIOLATION OF SECTION 7209 OF THE NEW YORK STATE EDUCATION LAW, UNLESS THE PERSON IS ACTING UNDER THE DIRECTION OF A LICENSED PROFESSIONAL ENGINEER. ANY PLAN ALTERATIONS BY ANOTHER ENGINEER MUST BE MARKED AS SUCH, INCLUDING THE SIGNATURE AND SEAL OF THE ALTERING ENGINEER.

N

SCALE: 1/4" = 1'-0"

CAUTION: IF SHEET IS LESS THAN 34"x22" USE GRAPHIC SCALE

SYM	DESCRIPTION	DATE	APPR
1	APPROVAL SUBMISSION	3/30/12	

NAVFAC

STATE OF NEW YORK
DAVID DANIEL BRACK
080336
LICENSED PROFESSIONAL ENGINEER

DES HKM | DR SNL
REVIEWED BY HKM
PM/DM
CHIEF ENG/ARCH HKM

DEPARTMENT OF THE NAVY
NAVAL FACILITIES ENGINEERING COMMAND
NORTHEAST IPT
AQUA NY

NAVAL FACILITIES ENGINEERING COMMAND ~ MID-ATLANTIC
NAVAL STATION - NORFOLK, VIRGINIA

NASSAU COUNTY, NEW YORK

MODIFICATIONS TO WATER TREATMENT FACILITY

PROPOSED LPGAC BUILDING EQUIPMENT LAYOUT

CODE ID. NO. 80091 | SIZE D
SCALE: 1/4"=1'-0"
MAXIMO NO. N62470-08-D-1001
JOB ORDER NO. WE-25
SPEC. NO.
CONSTR. CONTR. NO. 112G02223
NAVFAC DRAWING NO.
SHEET OF --

M-1

K:\112G02223 - Aqua Bethpage-Navy Project - H. Mitol\Drawings\Mechanical\02223_M1.dwg 03/27/2012 13:09

32 NOV 07 2012

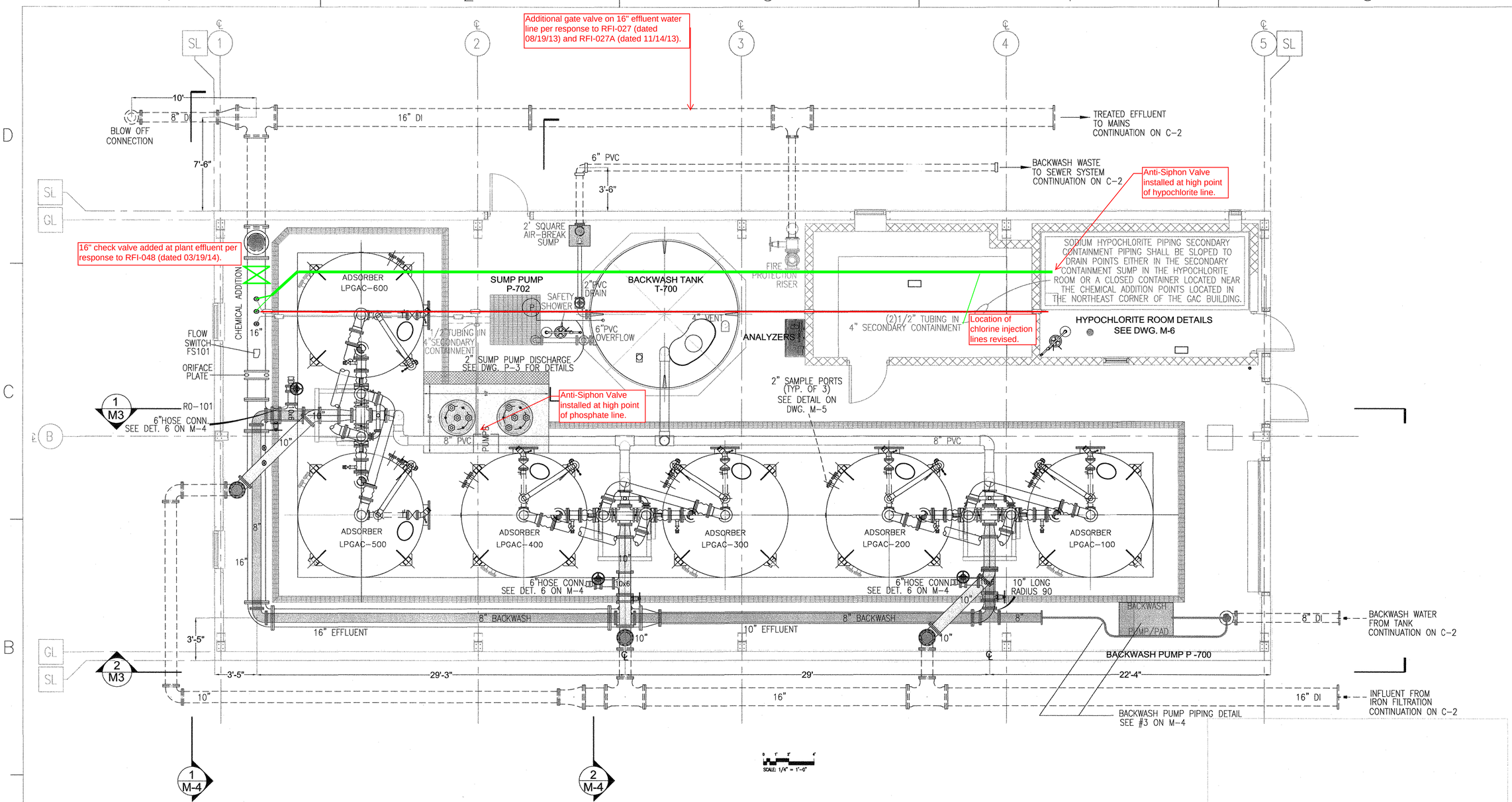

PIPING NOTES:

UNDERGROUND PIPING SHALL BE MECHANICAL JOINT, DIP, CLASS 2 CEMENT LINED RETAINED GLAND TYPE
PROVIDE THREADED ROD TIES IN ALL WATER LINES (TYP.)
INTERIOR PIPING SHALL BE FLANGED, CLASS 52 CEMENT LINED, DIP.
BACKWASH WASTE PIPING SHALL BE SCH. 80 PVC, FLANGED AT FITTINGS.
ALL ABOVE GROUND PROCESS LINES SHALL HAVE 1" BALL VALVE HIGH POINT VENTS AND LOW POINT DRAINS.

UNAUTHORIZED ALTERATION OR ADDITION TO THIS PLAN IS A VIOLATION OF SECTION 7209 OF THE NEW YORK STATE EDUCATION LAW, UNLESS THE PERSON IS ACTING UNDER THE DIRECTION OF A LICENSED PROFESSIONAL ENGINEER. ANY PLAN ALTERATIONS BY ANOTHER ENGINEER MUST BE MARKED AS SUCH, INCLUDING THE SIGNATURE AND SEAL OF THE ALTERING ENGINEER.

N

NASSAU COUNTY DEPARTMENT OF HEALTH
DIVISION OF ENVIRONMENTAL HEALTH
These plans are hereby approved
SHEET 33 OF 69
See first sheet hereof for date and signature

CAUTION: IF SHEET IS LESS THAN 34"x22" USE GRAPHIC SCALE

NAVFAC

DEPARTMENT OF THE NAVY
NAVAL FACILITIES ENGINEERING COMMAND
NORTHEAST IPT
NAVAL FACILITIES ENGINEERING COMMAND ~ MID-ATLANTIC
NAVAL STATION - NORFOLK, VIRGINIA
AQUA NY
NASSAU COUNTY, NEW YORK
MODIFICATIONS TO WATER TREATMENT FACILITY

PROPOSED LPGAC PIPING LAYOUT

DES HKM	DR SNL
REVIEWED BY	HKM
PM/DM	
CHIEF ENG/ARCH	HKM
CODE ID. NO. 80091	SIZE D
SCALE:	1/4"=1'-0"
MAXIMO NO. N62470-08-D-1001	
JOB ORDER NO. WE-25	
SPEC. NO.	
CONSTR. CONTR. NO. 112G02223	
NAVFAC DRAWING NO.	
SHEET	OF --
M-2	

NOV 07 2012

33

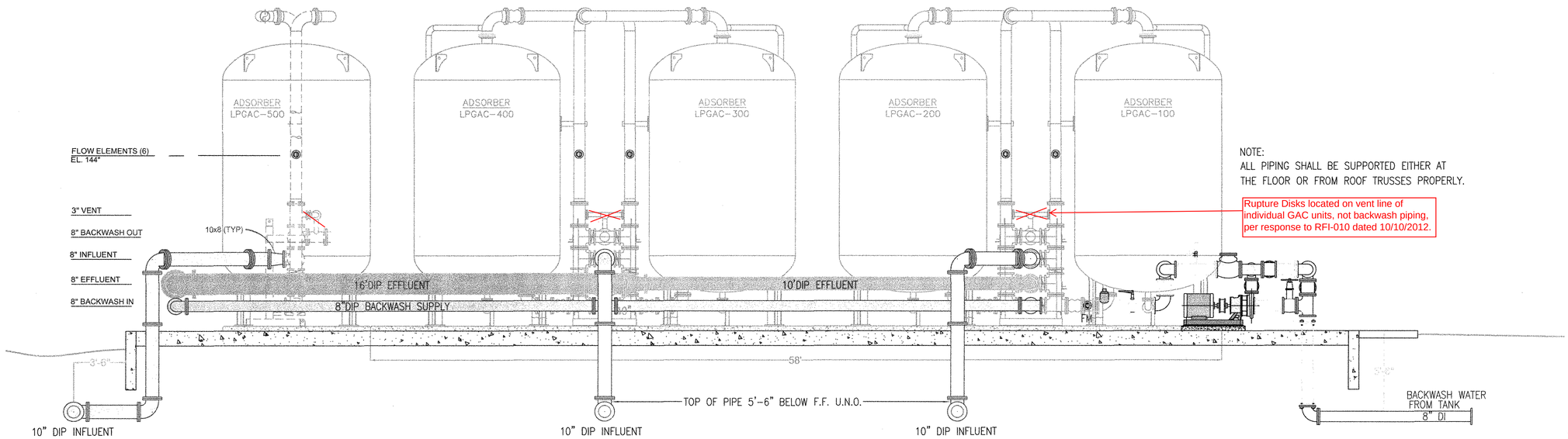

NOTE:
ALL PIPING SHALL BE SUPPORTED EITHER AT THE FLOOR OR FROM ROOF TRUSSES PROPERLY.

Rupture Disks located on vent line of individual GAC units, not backwash piping, per response to RFI-010 dated 10/10/2012.

2 / M-3 SECTION: VESSEL PIPING - REAR (TYP.)
SCALE: 1/4" =1'-0"

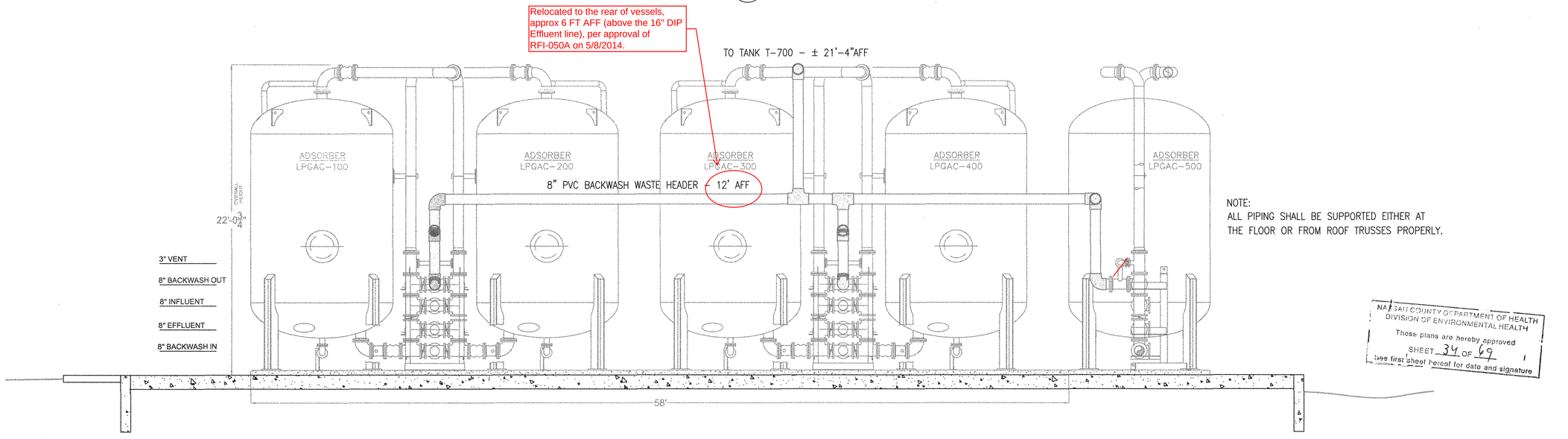

NOTE:
ALL PIPING SHALL BE SUPPORTED EITHER AT THE FLOOR OR FROM ROOF TRUSSES PROPERLY.

NASSAU COUNTY DEPARTMENT OF HEALTH
DIVISION OF ENVIRONMENTAL HEALTH
These plans are hereby approved
SHEET 34 OF 69
See first sheet hereof for date and signature

1 / M-3 SECTION: VESSEL PIPING - FRONT (TYP.)
SCALE: 1/4" =1'-0"

UNAUTHORIZED ALTERATION OR ADDITION TO THIS PLAN IS A VIOLATION OF SECTION 7209 OF THE NEW YORK STATE EDUCATION LAW, UNLESS THE PERSON IS ACTING UNDER THE DIRECTION OF A LICENSED PROFESSIONAL ENGINEER. ANY PLAN ALTERATIONS BY ANOTHER ENGINEER MUST BE MARKED AS SUCH, INCLUDING THE SIGNATURE AND SEAL OF THE ALTERING ENGINEER.

CAUTION: IF SHEET IS LESS THAN 34"x22" USE GRAPHIC SCALE

NASSAU COUNTY DEPT. OF HEALTH SUBMITTAL 9/9/2011

SYM	DESCRIPTION	DATE	APPR

NAVFAC

STATE OF NEW YORK
DAVID DANIEL BRAYACK
080336
LICENSED PROFESSIONAL ENGINEER

DES	HKM	DR	SNL
REVIEWED BY		HKM	
PM/DM		DDB	
CHIEF ENG/ARCH		HKM	

DEPARTMENT OF THE NAVY
NAVAL FACILITIES ENGINEERING COMMAND
NORTHEAST IPT
NAVAL FACILITIES ENGINEERING COMMAND ~ MID-ATLANTIC
NAVAL STATION - NORFOLK, VIRGINIA

AQUA NY
NASSAU COUNTY, NEW YORK
MODIFICATIONS TO WATER TREATMENT FACILITY

BUILDING SECTIONS

CODE ID. NO. 80091 SIZE D
SCALE: 1/4"=1'-0"
MAXIMO NO. N62470-08-D-1001
JOB ORDER NO. WE-25
SPEC. NO.
CONSTR. CONTR. NO. 112G02223
NAVFAC DRAWING NO.
SHEET OF --

M-3

NOV 07 2012 34

K:\112G02223 - Aqua Bethpage-Navy Project - H. Mital\Drawings\Mechanical\02223_M3.dwg 09/14/2011 10:37

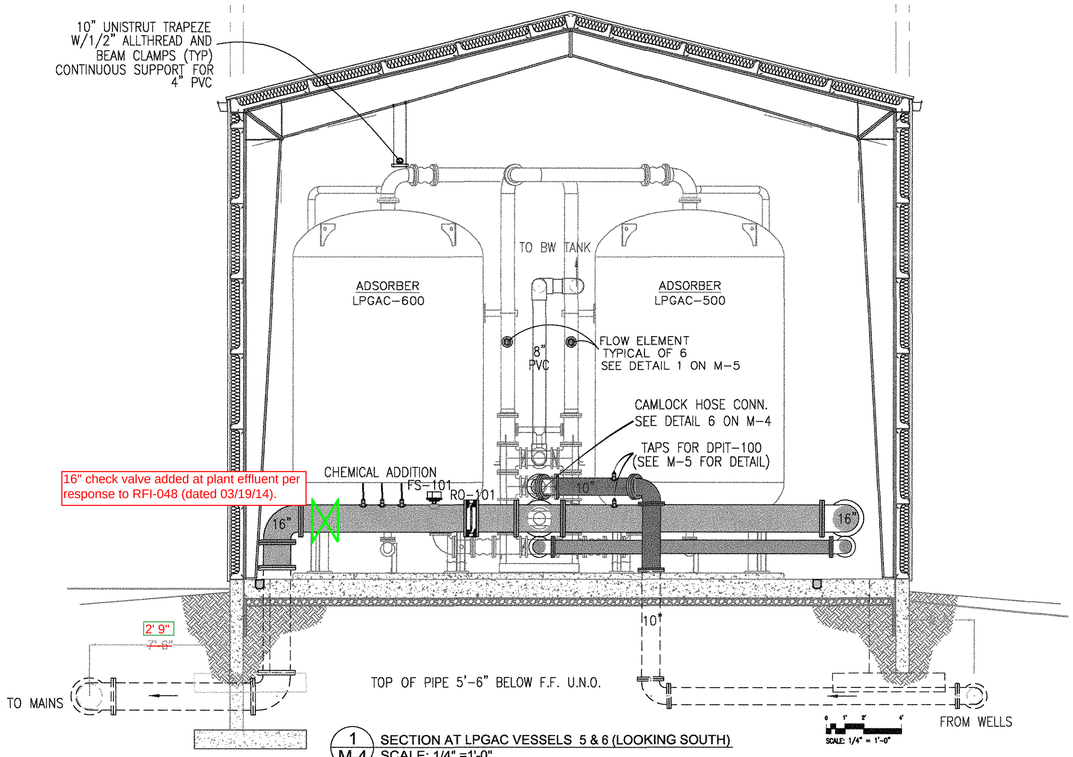

1 M-4 SECTION AT LPGAC VESSELS 5 & 6 (LOOKING SOUTH)
SCALE: 1/4" =1'-0"

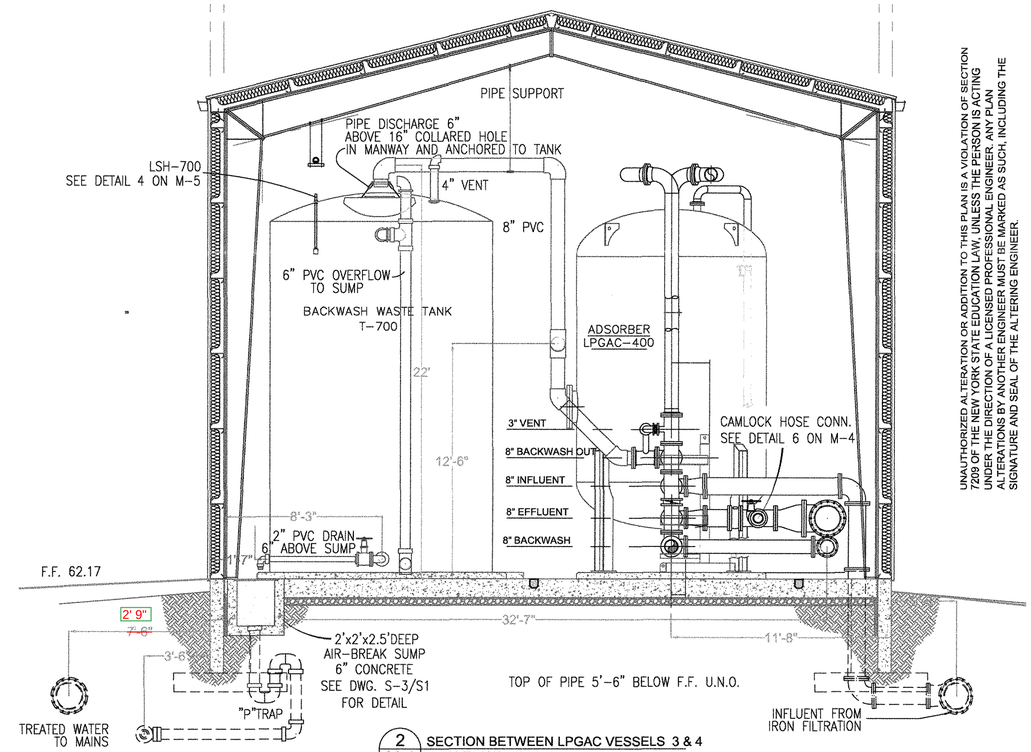

2 M-4 SECTION BETWEEN LPGAC VESSELS 3 & 4
SCALE: 1/4" =1'-0"

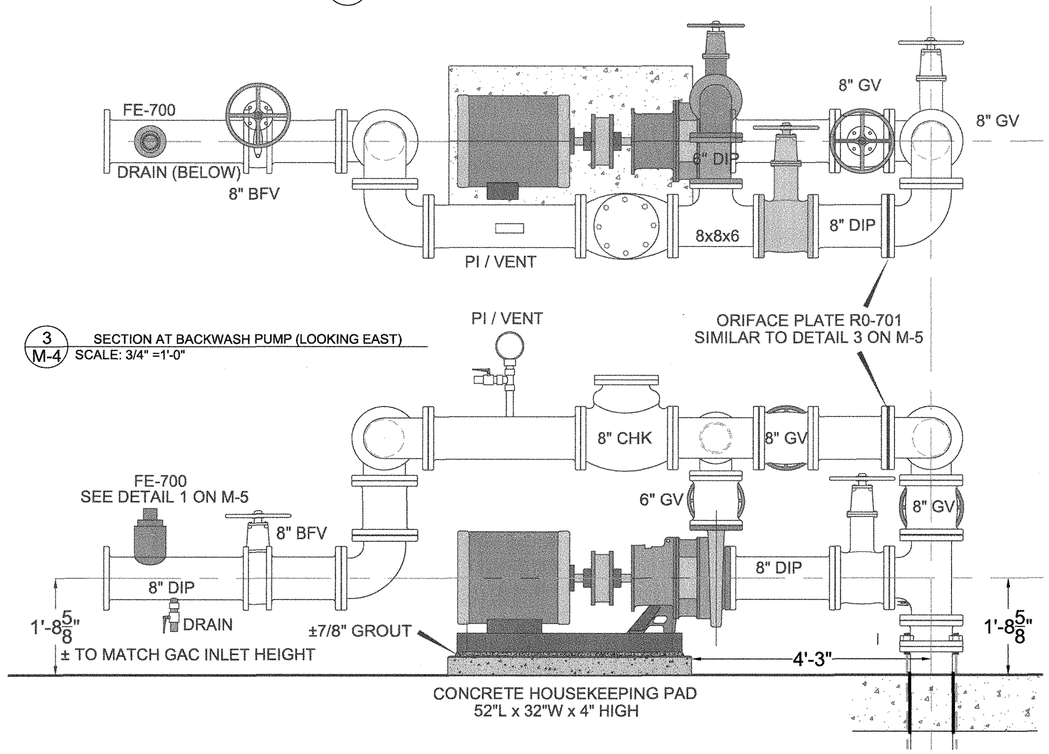

3 M-4 SECTION AT BACKWASH PUMP (LOOKING EAST)
SCALE: 3/4" =1'-0"

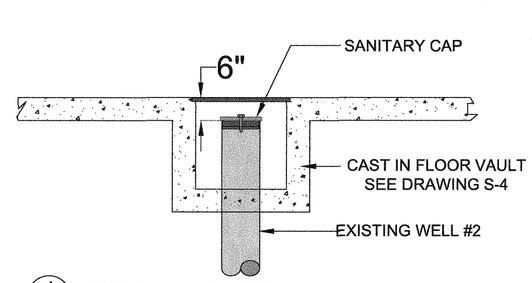

4 M-4 WELL#2 SANITARY CAP DETAIL
SCALE: NTS

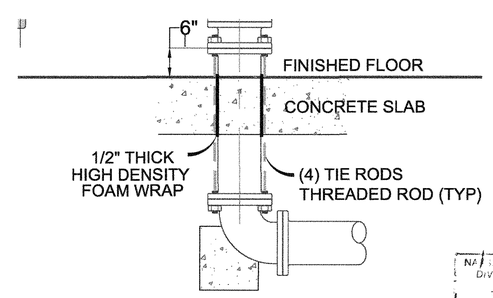

5 M-4 PIPE PENETRATION THROUGH FLOOR (TYP.)
SCALE: NTS

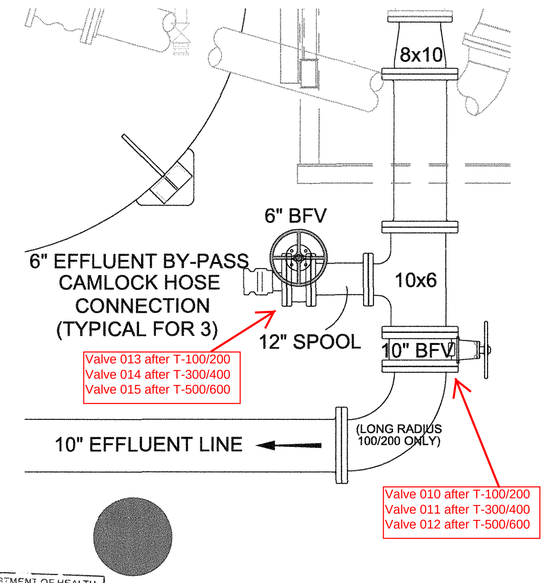

6 M-4 EFFLUENT BY-PASS CONNECTION DETAIL
SCALE: NTS

NASSAU COUNTY DEPARTMENT OF HEALTH
DIVISION OF ENVIRONMENTAL HEALTH
These plans are hereby approved
SHEET 35 OF 69
See first sheet hereof for date and signature

UNAUTHORIZED ALTERATION OR ADDITION TO THIS PLAN IS A VIOLATION OF SECTION 7209 OF THE NEW YORK STATE EDUCATION LAW, UNLESS THE PERSON IS ACTING UNDER THE DIRECTION OF A LICENSED PROFESSIONAL ENGINEER. ANY PLAN ALTERATIONS BY ANOTHER ENGINEER MUST BE MARKED AS SUCH, INCLUDING THE SIGNATURE AND SEAL OF THE ALTERING ENGINEER.

SYM	DESCRIPTION	DATE	APPR.
1	APPROVAL SUBMISSION, REV 1	6/11/12	

NAVFAC

STATE OF NEW YORK — DAVID SENGEL PARRICK — 080336 — LICENSED PROFESSIONAL ENGINEER

DCS HKM | DR SNL
REVIEWED BY HKM
PM/DM
CHIEF ENG/ARCH HKM

DEPARTMENT OF THE NAVY
NAVAL FACILITIES ENGINEERING COMMAND
NORTHEAST PT
NAVAL FACILITIES ENGINEERING COMMAND ~ MID-ATLANTIC
NAVAL STATION - NORFOLK, VIRGINIA
AQUA NY
NASSAU COUNTY, NEW YORK
MODIFICATIONS TO WATER TREATMENT FACILITY
BUILDING SECTIONS

CODE ID. NO. 80091 | SIZE D
SCALE: AS NOTED
MAXIMO NO. N62470-09-D-1001
JOB ORDER NO. WE-25
SPEC. NO.
CONSTR. CONTR. NO. 112G02223
NAVFAC DRAWING NO.
SHEET OF --
M-4

CAUTION: IF SHEET IS LESS THAN 34"x22" USE GRAPHIC SCALE

K:\112G02223 - Aqua Bethpage-Nvy Project - N. Mid\Drawings\Mechanical\02223_M4.dwg 06/07/2012 10:04

35 JUN 07 2012

UNAUTHORIZED ALTERATION OR ADDITION TO THIS PLAN IS A VIOLATION OF SECTION 7209 OF THE NEW YORK STATE EDUCATION LAW, UNLESS THE PERSON IS ACTING UNDER THE DIRECTION OF A LICENSED PROFESSIONAL ENGINEER. ANY PLAN ALTERATIONS BY ANOTHER ENGINEER MUST BE MARKED AS SUCH, INCLUDING THE SIGNATURE AND SEAL OF THE ALTERING ENGINEER.

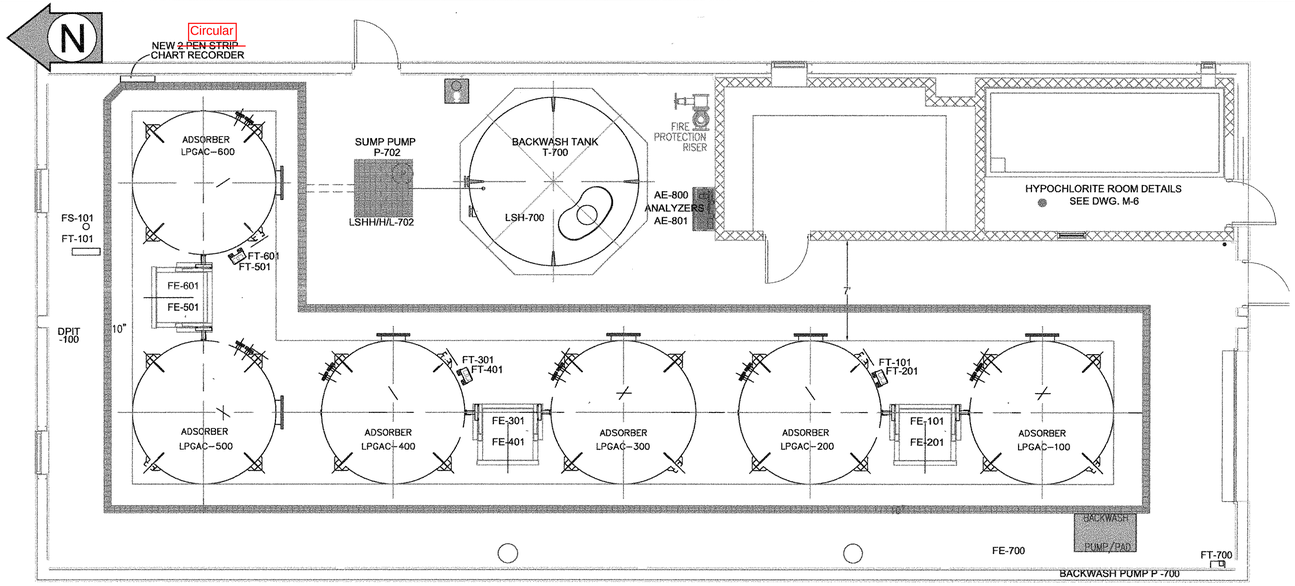

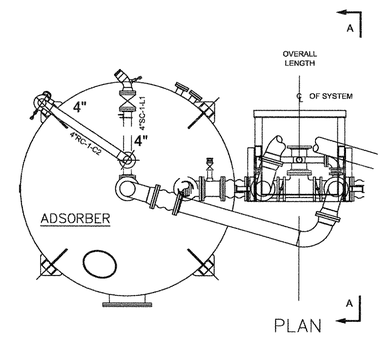

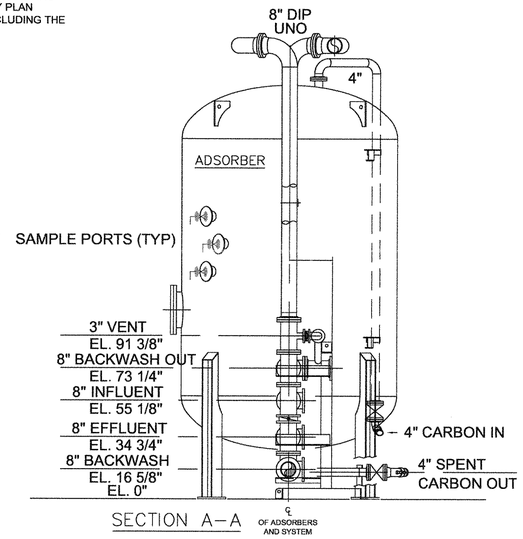

5 / M-5 LPGAC UNIT DETAILS
SCALE: NTS

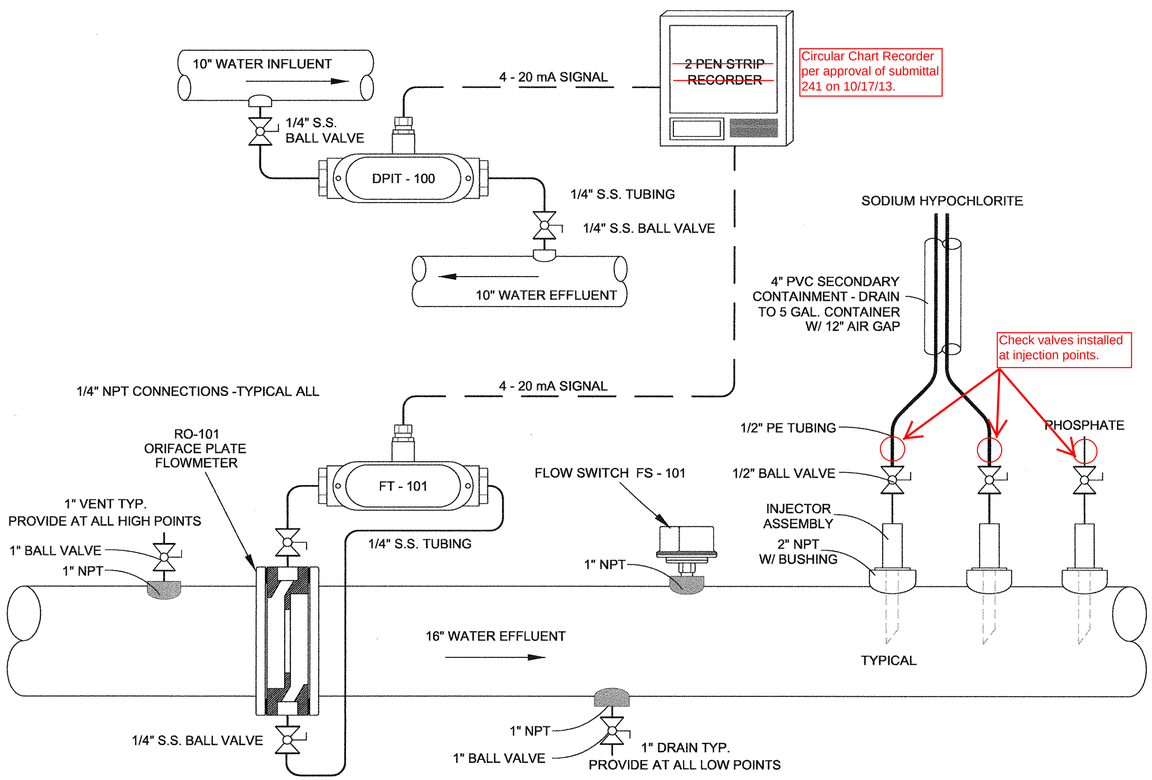

3 / M-5 FLOW / DIFFERENTIAL SWITCH / INJECTOR INSTALLATION DETAIL
SCALE: NTS

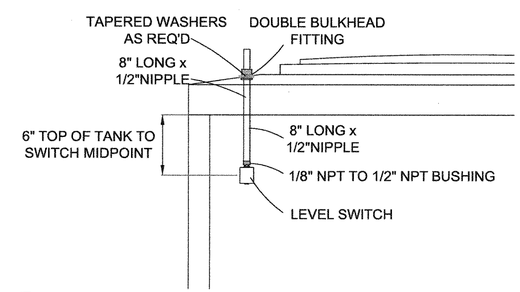

4 / M-5 BACKWASH TANK LEVEL SWITCH INSTALLATION DETAIL
SCALE: NTS

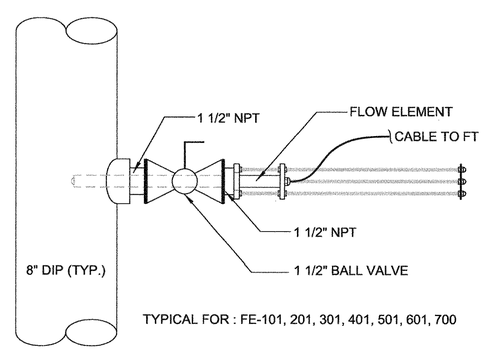

1 / M-5 FLOW ELEMENT INSTALLATION (TYP)
SCALE: NTS

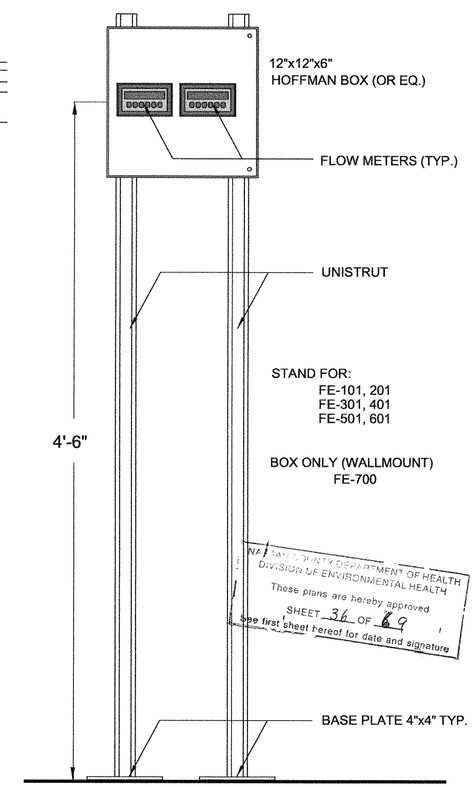

2 / M-5 FLOW TRANSMITTER INSTALLATION (TYP)
SCALE: NTS

NAVAL FACILITIES ENGINEERING COMMAND ~ MID-ATLANTIC
NAVAL STATION - NORFOLK, VIRGINIA
DEPARTMENT OF THE NAVY
NAVAL FACILITIES ENGINEERING COMMAND
NORTHEAST PT
AQUA NY
NASSAU COUNTY, NEW YORK
MODIFICATIONS TO WATER TREATMENT FACILITY
INSTRUMENT PIPING

DES	HKM	DR	SNL
REVIEWED BY		HKM	
PM/DM			
CHIEF ENG/ARCH		HKM	

CODE ID. NO. 80091 | SIZE D
SCALE: 1/4"=1'-0"
MAXIMO NO. N62470-08-D-1001
JOB ORDER NO. WE-25
SPEC. NO.
CONSTR. CONTR. NO. 112G02223
NAVFAC DRAWING NO.
SHEET OF — —
M-5

1	APPROVAL SUBMISSION, REV 1	8/30/12	-
	DESCRIPTION	DATE	APPR

NAVFAC

STATE OF NEW YORK — DANIEL H. KIM — 080256 — LICENSED PROFESSIONAL ENGINEER

NAVAL FACILITIES ENGINEERING COMMAND
NASSAU COUNTY DEPARTMENT OF HEALTH
DIVISION OF ENVIRONMENTAL HEALTH
These plans are hereby approved
SHEET 36 OF 69
See first sheet hereof for date and signature

NOV 07 2012
36

K:\112G02223 - Aqua Bethpage-Nkv Project T. Mt(all)\Drawings\Mechanical\02223_M5.dwg 08/31/2012 14:43

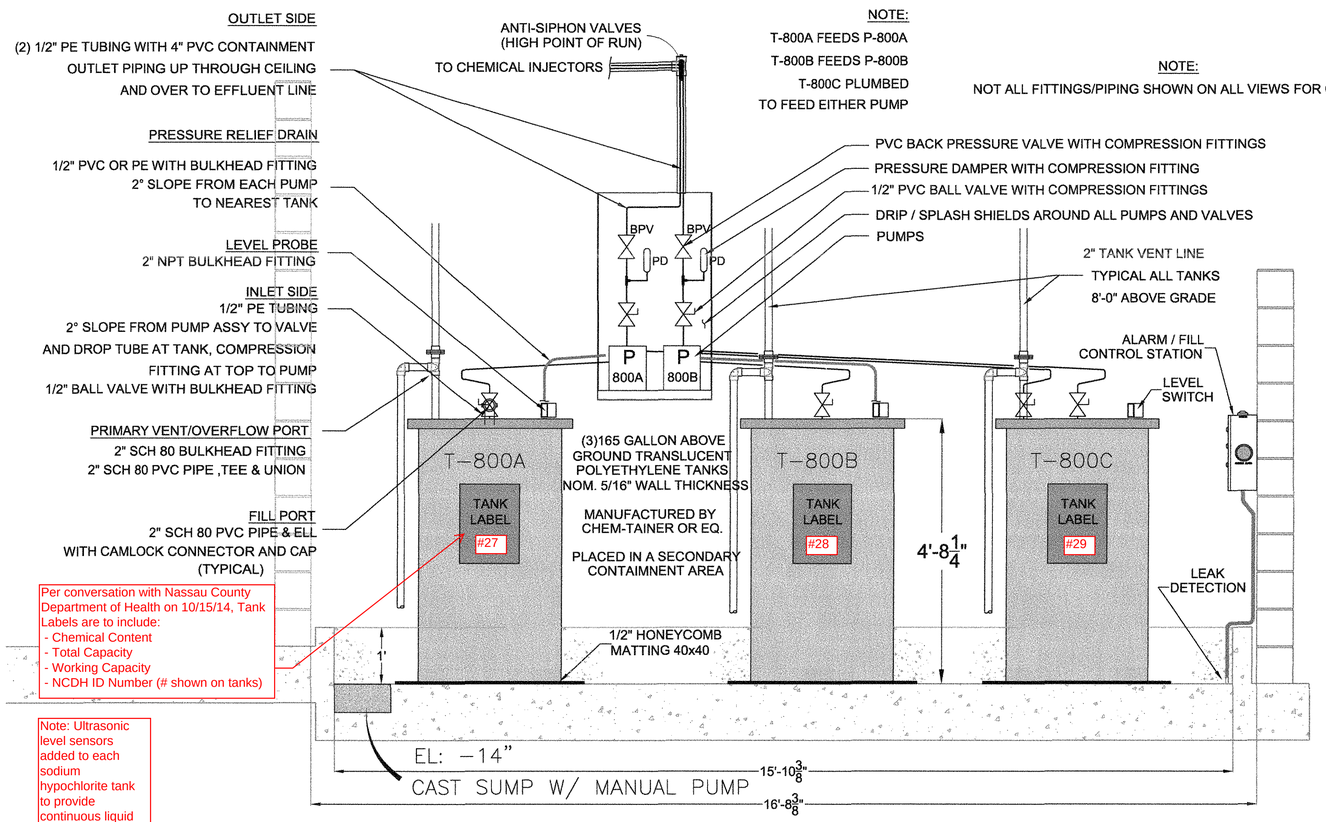

1 M6 TANK ELEVATION

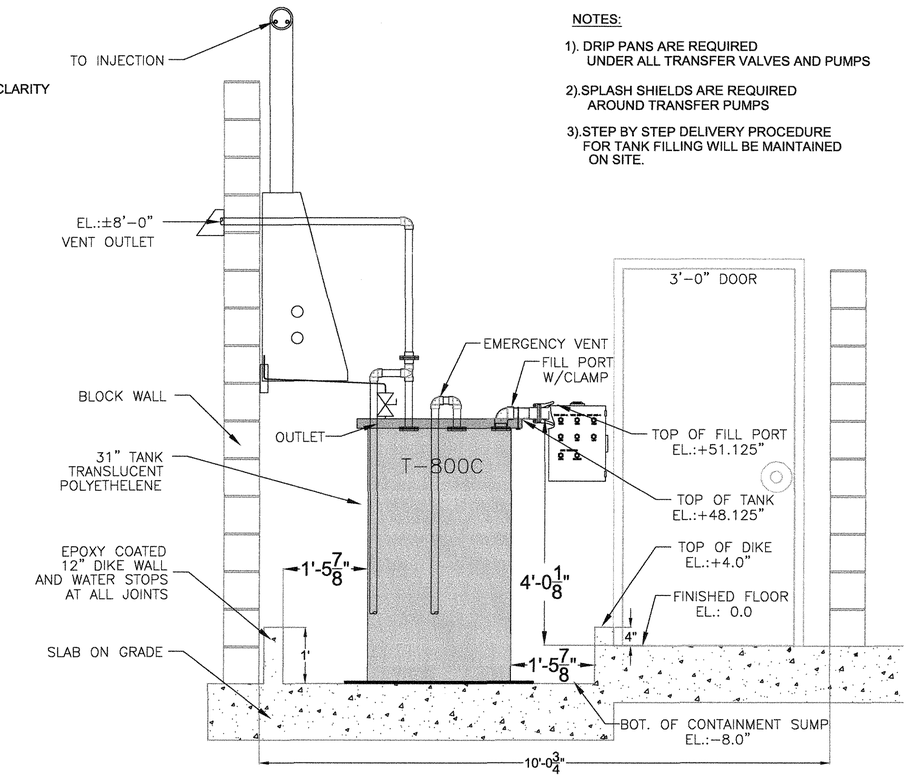

NOTES:

1). DRIP PANS ARE REQUIRED UNDER ALL TRANSFER VALVES AND PUMPS

2).SPLASH SHIELDS ARE REQUIRED AROUND TRANSFER PUMPS

3).STEP BY STEP DELIVERY PROCEDURE FOR TANK FILLING WILL BE MAINTAINED ON SITE.

2 M6 TANK ELEVATION

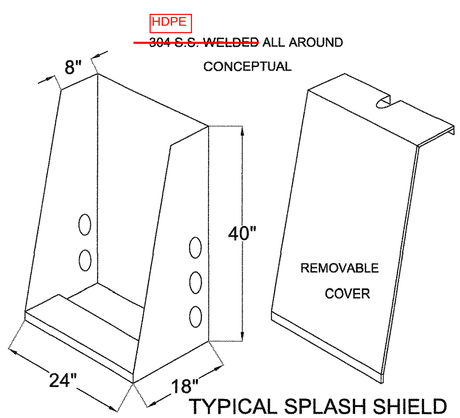

4 M6 TYPICAL SPLASH SHIELD

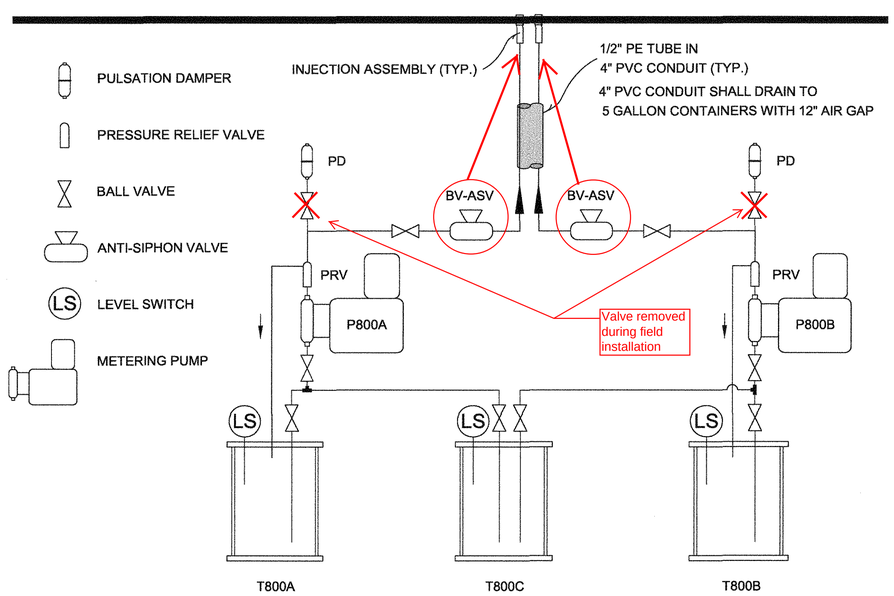

3 M6 SODIUM HYPOCHLORITE SCHEMATIC

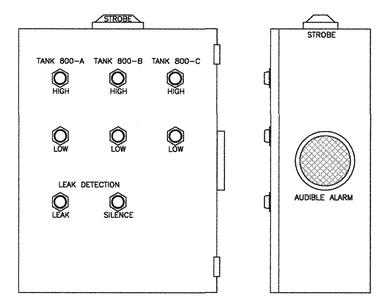

CS-800 ALARM / FILL
CONTROL STATION
16Hx12Wx6D
SEE DWG. E-20 FOR WIRING

5 M6 FILL CONTROL STATION

NASSAU COUNTY DEPARTMENT OF HEALTH
DIVISION OF ENVIRONMENTAL HEALTH
These plans are hereby approved
SHEET 37 OF 69
See first sheet hereof for date and signature

UNAUTHORIZED ALTERATION OR ADDITION TO THIS PLAN IS A VIOLATION OF SECTION 7209 OF THE NEW YORK STATE EDUCATION LAW, UNLESS THE PERSON IS ACTING UNDER THE DIRECTION OF A LICENSED PROFESSIONAL ENGINEER. ANY PLAN ALTERATIONS BY ANOTHER ENGINEER MUST BE MARKED AS SUCH, INCLUDING THE SIGNATURE AND SEAL OF THE ALTERING ENGINEER.

CAUTION: IF SHEET IS LESS THAN 34"x22" USE GRAPHIC SCALE

1	APPROVAL SUBMISSION, REV 1	6/11/12	HKM
	DESCRIPTION	DATE	

NAVFAC

STATE OF NEW YORK — DOUGLAS R. HOLT — 060336 — LICENSED PROFESSIONAL ENGINEER

DES HKM | DR SNL
REVIEWED BY HKM
PM/DM
CHIEF ENG/ARCH HKM

NAVAL FACILITIES ENGINEERING COMMAND
NAVAL STATION - NORFOLK, VIRGINIA

DEPARTMENT OF THE NAVY
NAVAL FACILITIES ENGINEERING COMMAND ~ MID-ATLANTIC
NORTHEAST PT.
AQUA NY
NASSAU COUNTY, NEW YORK
MODIFICATIONS TO WATER TREATMENT FACILITY
CHEMICAL ROOM DETAILS

CODE ID. NO. 80091 | SIZE D
SCALE: 1/4"=1'-0"
MAXIMO NO. N62470-08-D-1001
JOB ORDER NO. WE-25
SPEC. NO.
CONSTR. CONTR. NO. 112G02223
NAVFAC DRAWING NO.
SHEET OF --
M-6

K:\112G02223 - Aqua Bellhopge-\Nvy Project - H. Mist\Drawings\Mechanical\G2223_M6.dwg 06/07/2012 10:05

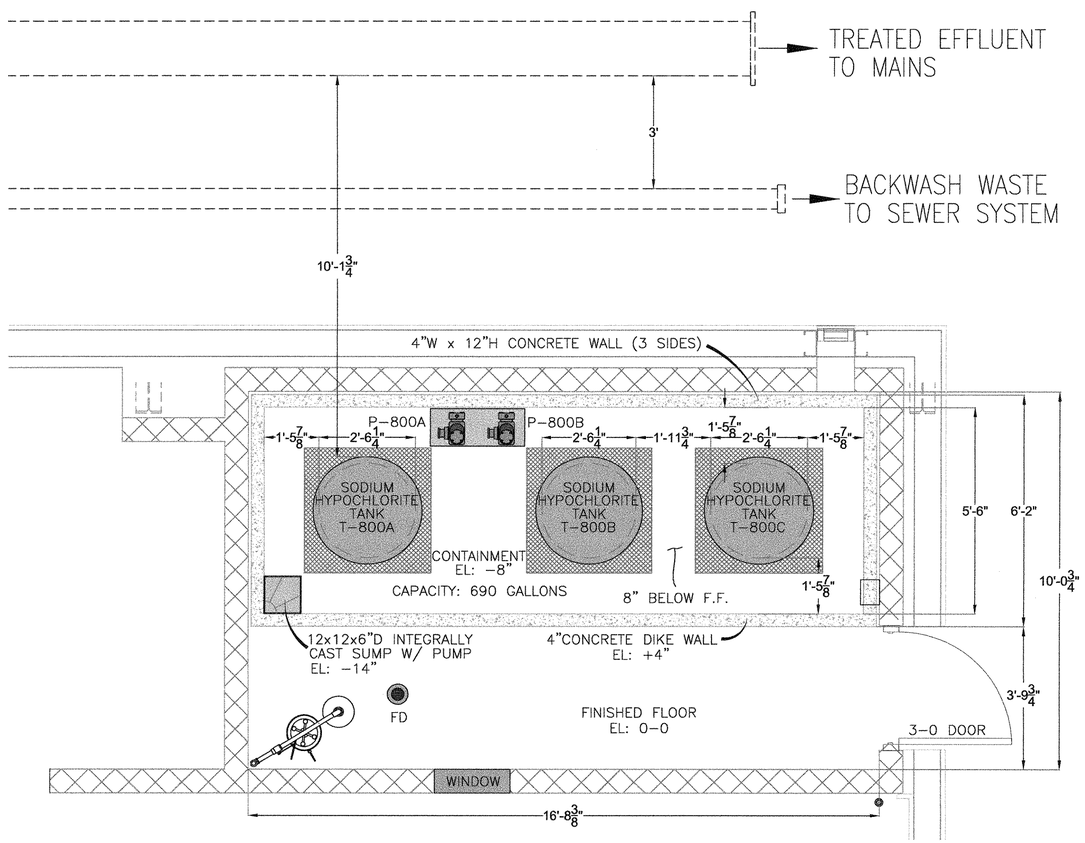

1 M6.1 CHEMICAL ROOM PLAN VIEW
with 31" dia. Tanks (165 Gal.)

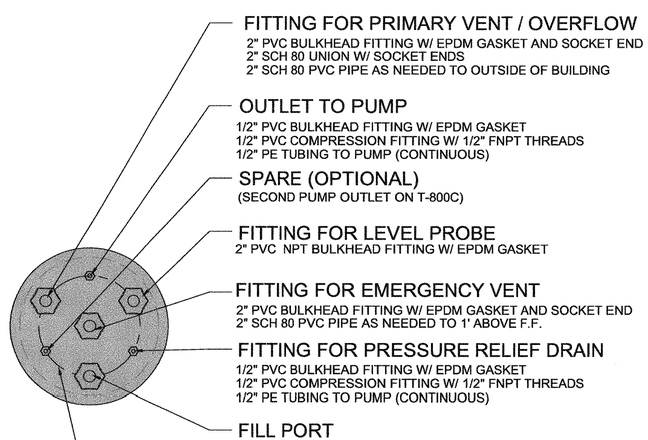

2 M-6.1 SODIUM HYPOCHLORITE TANK TOP DETAIL

CHECKLIST FOR ABOVEGROUND TANKS

1. SECONDARY CONTAINMENT IS PROVIDED BY TANK IN A CONCRETE DIKE.
2. THE TANK IS FILLED MANUALLY BY HOSE FROM TANKER TRUCK
3. THE TANK IS PROVIDED WITH AN OPERATOR AS A MEANS OF PREVENTING AN OVERFILL CONDITION.
4. ALL PIPES ARE ABOVE GROUND AND EXCEPT FOR OVERHEAD PRESSURIZED LINES, VISIBLE FOR INSPECTION. OVERHEAD PRESSURIZED LINES ARE OBSTRUCTED BY SECONDARY CONTAINMENT PIPING.
5. THERE ARE NO SURFACE WATERS WITHIN 100' OF THE TANKS.
6. TANK SHALL BE LABELED WITH ITS DESIGNED WORKING CAPACITY, CONTENTS, NCHD IDENTIFICATION NUMBER AND INSTALLATION DATE.
7. THE TANK INSTALLATION CONFORMS TO ARTICLE XI OF THE NASSAU COUNTY PUBLIC HEALTH ORDINANCE, THE N.T.S. UNIFORM FIRE PREVENTION AND BUILDING CODE, AND 6NYCRR PART 599 IF IT IS A CHEMICAL TANK INSTALLATION.
8. THE TANK, PIPING AND ALL ANCILLARY EQUIPMENT SHALL BE INSTALLED IN ACCORDANCE WITH THE MANUFACTURERS RECOMMENDATIONS.
9. THE OWNER/OPERATOR SHALL OBTAIN A BUILDING PERMIT FOR THE TANK INSTALLATION IF IT IS REQUIRED FROM THE LOCAL BUILDING DEPARTMENT.
10. THE TANK PIPING MUST BE A MINIMUM OF 100' FROM ALL WATER SUPPLY WELLS. (EXCEPTION REQUESTED FROM NCDH)
11. THE ENGINEER SHALL NOTIFY THE NCHD 5 DAYS PRIOR TO THE BEGINNING OF ALL WORK.
12. IF DEWATERING IS REQUIRED, ALL NECESSARY PERMITS SHALL BE OBTAINED FROM THE NEW YORK STATE DEPARTMENT OF ENVIRONMENTAL CONSERVATION AND ANY OTHER AGENCY HAVING JURISDICTION.
13. THE TANK(S) AND ALL PIPING SHALL BE TESTED FOR TIGHTNESS USING A METHOD APPROVED BY THE NCHD.
14. THE OVERFILL ALARM PANEL SHALL BE VISIBLE AND AUDIBLE FROM THE FILL PORT.
15. ALL TANKS MUST BE A MINIMUM 10' AWAY FROM ALL WATER LINES.
16. THE CERTIFICATION WILL BE SUBMITTED TO THE NCHD UPON COMPLETION OF THE INSTALLATION IN ACCORDANCE WITH SECTION 11.0 OF THE REGULATION OF ARTICLE XI OF THE NASSAU COUNTY PUBLIC HEALTH ORDINANCE.
17. THE INSTALLTION AND PLACEMENT OF THE TANK AND PIPING SHALL CONFORM WITH NFPA #30 AND/OR NFPA #31.
18. NO FLOOR DRAINS SHALL BE IN THE SECONDARY CONTAINMENT AREA.
19. DIKES AND DOUBLEWALL TANKS SHALL NOT HAVE ANY DRAIN OPENINGS.
20. THE DISCHARGE OF CONTAMINANTS TO FLOOR DRAINS CONNECTED TO DRYWELLS IS PROHIBITED UNLESS A PERMIT FOR SUCH DISCHARGE IS OBTAINED FROM THE UNDERGROUND INJECTION CONTROL (UIC) OFFICE OF THE UNITED STATES ENVIRONMENTAL PROTECTION AGENCY.
21. FLOOR DRAINS AND DRYWELLS AT THIS SITE ARE SUBJECT TO INSPECTION BY THE NASSAU COUNTY DEPARTMENT OF HEALTH AND/OR THE USEPA TO DETERMINE THE POINTS OF CONTAINMENT DISCHARGES. AS A RESULT OF SUCH INSPECTION THE PROPERTY OWNER OR OPERATOR MAY BE REQUIRED BY THE USEPA TO INVESTIGATE AND REMEDIATE CONTAMINATION RESULTING FROM PAST CONTAINMENT DISCHARGES.
22. CHEMICAL FIRE SUPPRESSION SYSTEMS MUST BE FIELD INSTALLED BY AN INSTALLER LICENSED BY THE NASSAU COUNTY FIRE MARSHALL AND TESTED IN THE PRESENCE OF A REPRESENTATIVE OF THE FIRE MARSHALL.
23. DEPTH TO GROUNDWATER IS APPROXIMATELY 23 FEET.
24. TANK INSTALLED IN A NON-TRAFFIC AREA AND NOT EXPOSED TO PHYSICAL HAZARDS.
25. SECONDARY CONTAINMENT CAPACITY:
    WORKING-515 GALLONS
    MAXIMUM-687 GALLONS
26. SUMP PUMP IS TO BE MANUALLY OPERATED WITH A DEAD-MAN SWITCH.
27. ALL VALVES SHALL BE LABELED WITH OPEN AND CLOSED POSITIONS.
28. ALL VALVES, PUMPS AND ABOVE GROUND PIPING TO BE LABELED WITH THE NAME OF STORED SUBSTANCE.
29. VENTILATION INSIDE THE BUILDING IS ADEQUATE FOR THE CHEMICAL BEING STORED.
30. A SIGN WILL BE INSTALLED IN THE SODIUM HYPOCHLORITE ROOM THAT STATES:

    ONLY ONE SUCTION VALVE SHALL BE OPENED FOR EACH PUMP AT ANY TIME.

NASSAU COUNTY DEPARTMENT OF HEALTH
DIVISION OF ENVIRONMENTAL HEALTH
These plans are hereby approved
SHEET 38 OF 69
See first sheet hereof for date and signature

UNAUTHORIZED ALTERATION OR ADDITION TO THIS PLAN IS A VIOLATION OF SECTION 7209 OF THE NEW YORK STATE EDUCATION LAW, UNLESS THE PERSON IS ACTING UNDER THE DIRECTION OF A LICENSED PROFESSIONAL ENGINEER. ANY PLAN ALTERATIONS BY ANOTHER ENGINEER MUST BE MARKED AS SUCH, INCLUDING THE SIGNATURE AND SEAL OF THE ALTERING ENGINEER.

CAUTION: IF SHEET IS LESS THAN 34"x22" USE GRAPHIC SCALE

NO.	DESCRIPTION	DATE	APPR
1	APPROVAL SUBMISSION, REV 1	8/20/12	

NAVFAC

DES HKM DR SNL
REVIEWED BY HKM
PM/DM
CHIEF ENG/ARCH HKM

DEPARTMENT OF THE NAVY
NAVAL FACILITIES ENGINEERING COMMAND
NORTHEAST PT
AQUA NY

NAVAL FACILITIES ENGINEERING COMMAND ~ MID-ATLANTIC
NAVAL STATION - NORFOLK, VIRGINIA

NASSAU COUNTY, NEW YORK
MODIFICATIONS TO WATER TREATMENT FACILITY

CHEMICAL ROOM DETAILS

CODE ID. NO. 80091 SIZE D
SCALE: 1/4"=1'-0"
MAXIMO NO. N62470-08-D-1001
JOB ORDER NO. WE-25
SPEC. NO.
CONSTR. CONTR. NO. 112G02223
NAVFAC DRAWING NO.
SHEET OF --

M-6.1

NOV 07 2012
38

K:\112G02223 - Aqua Bethpage-Navy Project - H. Mich\Drawings\Mechanical\G2223_M6.dwg 08/31/2012 14:44

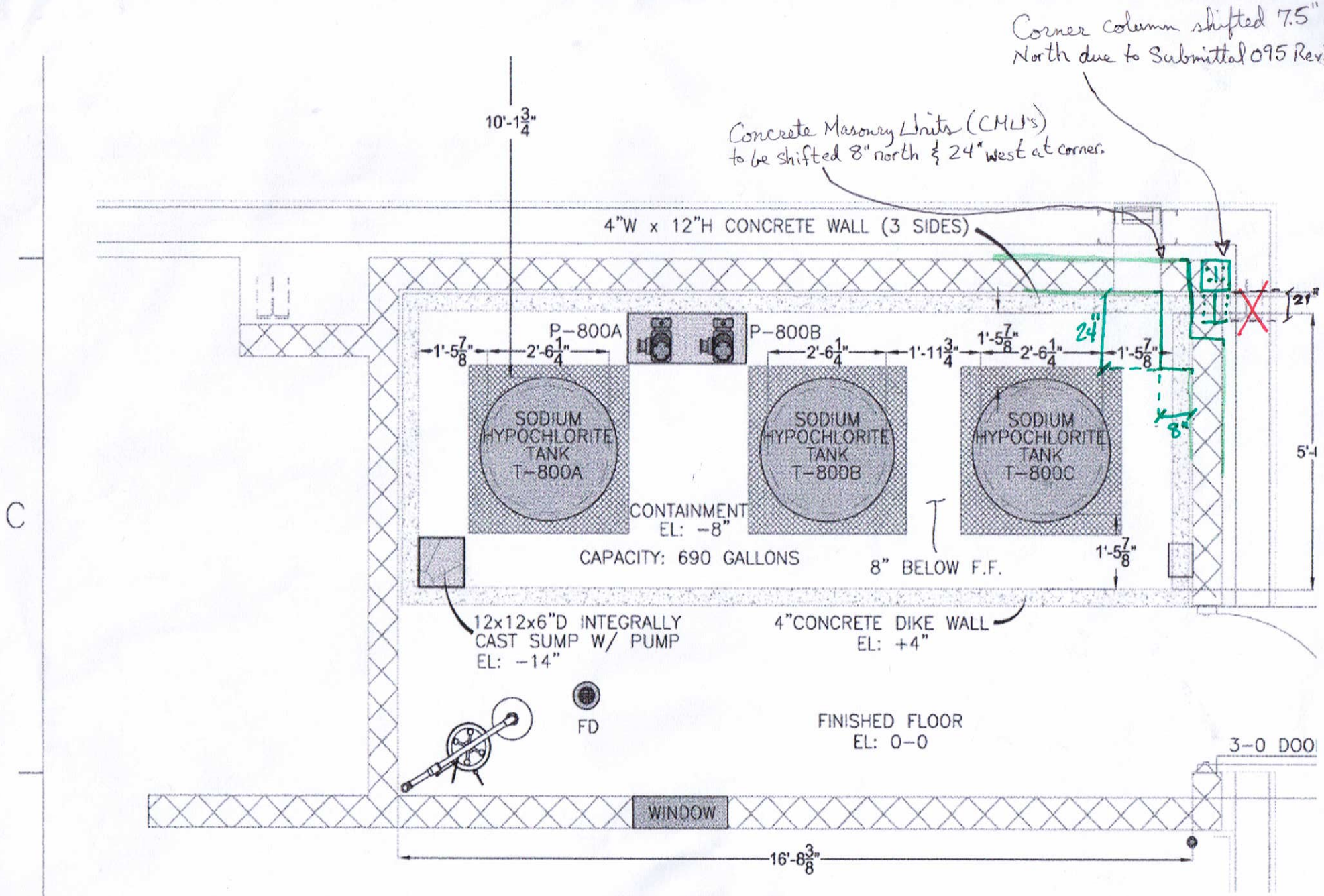

1
M6.1

CHEMICAL ROOM PLAN VIEW

with 31" dia. Tanks (165 Gal.)

NOTES:

1). DRIP PANS ARE REQUIRED UNDER ALL TRANSFER VALVES AND PUMPS

2).SPLASH SHIELDS ARE REQUIRED AROUND TRANSFER PUMPS

3).STEP BY STEP DELIVERY PROCEDURE FOR TANK FILLING WILL BE MAINTAINED ON SITE.

NOTE:

NOT ALL FITTINGS/PIPING SHOWN ON ALL VIEWS FOR CLARITY

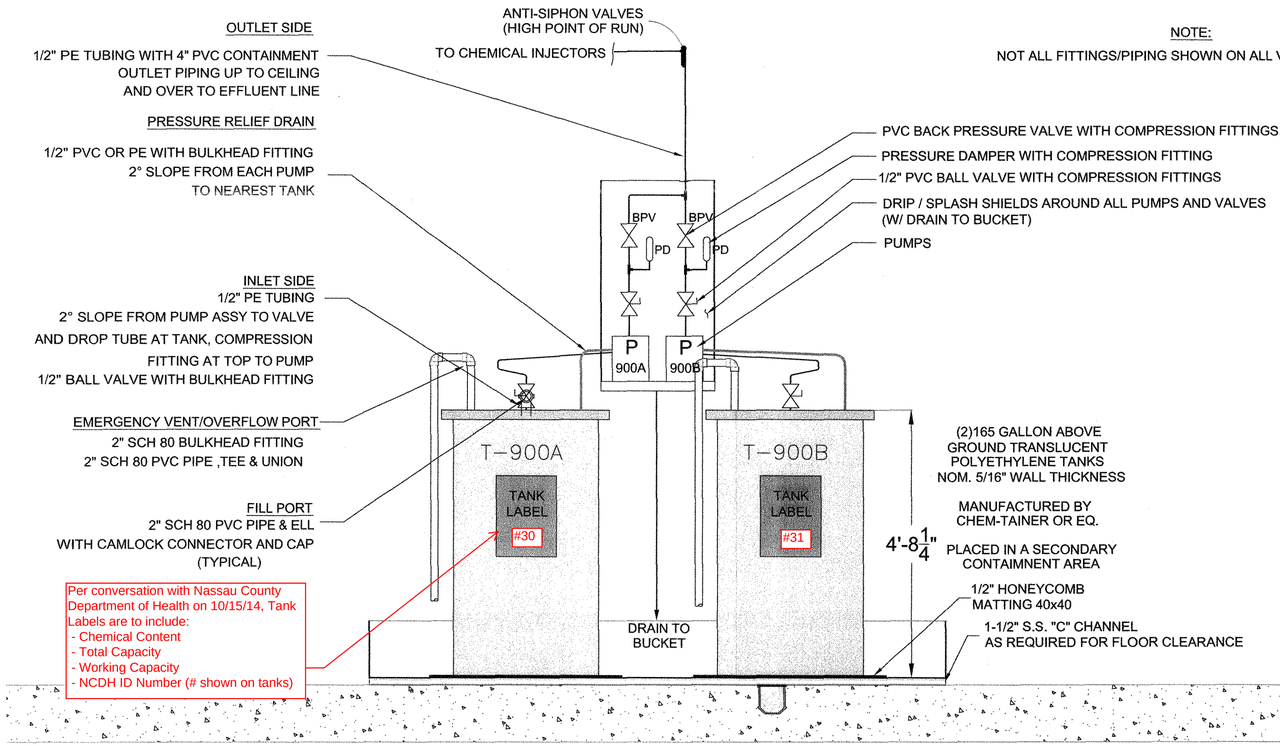

Per conversation with Nassau County Department of Health on 10/15/14, Tank Labels are to include:
- Chemical Content
- Total Capacity
- Working Capacity
- NCDH ID Number (# shown on tanks)

1 M6.2 TANK ELEVATION

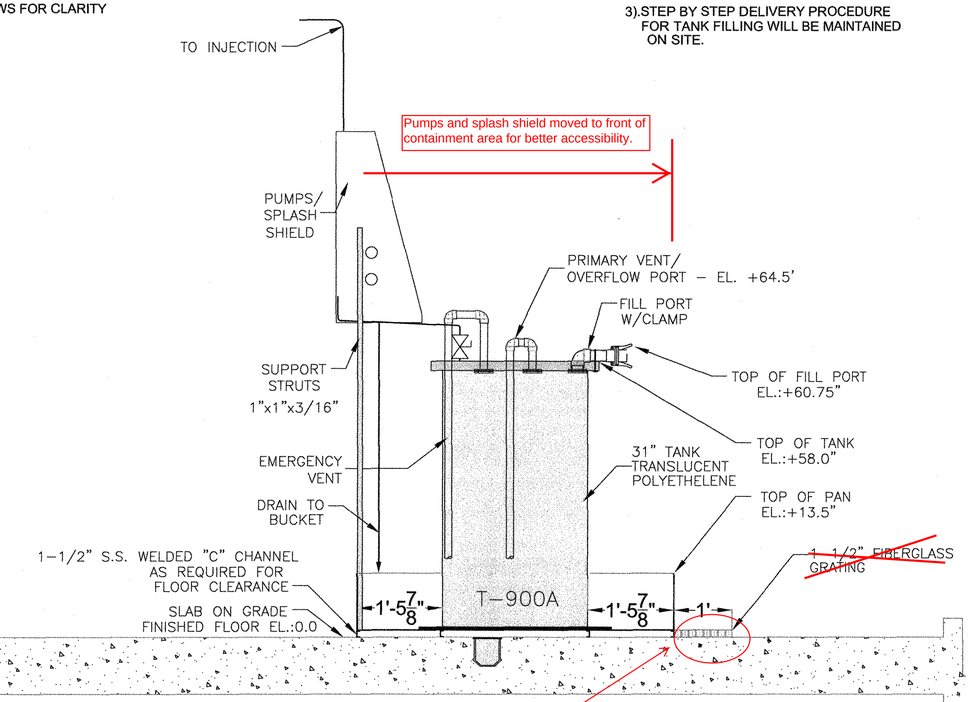

Pumps and splash shield moved to front of containment area for better accessibility.

Grating removed per the approval of submittal 303 Safety Step Stool (to provide access for the stool).

2 M6.2 TANK ELEVATION

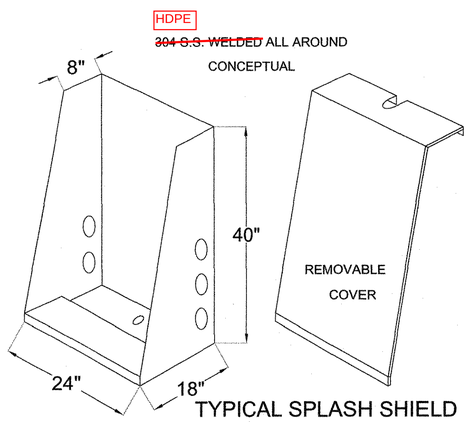

TYPICAL SPLASH SHIELD

4 M6.2 TYPICAL SPLASH SHIELD

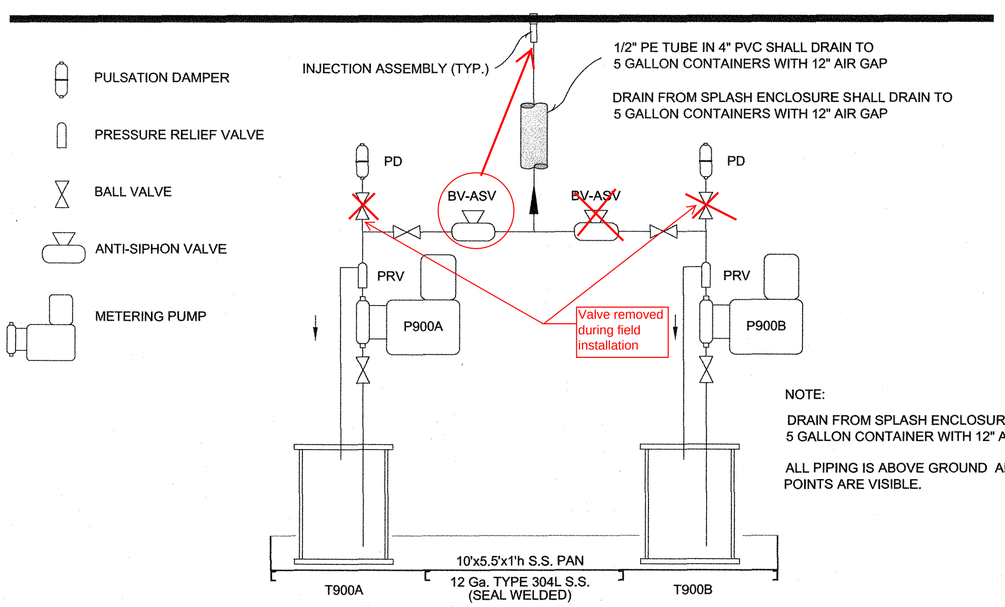

NOTE:

DRAIN FROM SPLASH ENCLOSURE SHALL DRAIN TO 5 GALLON CONTAINER WITH 12" AIR GAP

ALL PIPING IS ABOVE GROUND AND ALL DRAIN POINTS ARE VISIBLE.

3 M6.2 POLYPHOSPHATE SYSTEM

NASSAU COUNTY DEPARTMENT OF HEALTH
DIVISION OF ENVIRONMENTAL HEALTH
These plans are hereby approved
SHEET 39 OF 69
See first sheet hereof for date and signature

UNAUTHORIZED ALTERATION OR ADDITION TO THIS PLAN IS A VIOLATION OF SECTION 7209 OF THE NEW YORK STATE EDUCATION LAW, UNLESS THE PERSON IS ACTING UNDER THE DIRECTION OF A LICENSED PROFESSIONAL ENGINEER. ANY PLAN ALTERATIONS BY ANOTHER ENGINEER MUST BE MARKED AS SUCH, INCLUDING THE SIGNATURE AND SEAL OF THE ALTERING ENGINEER.

CAUTION: IF SHEET IS LESS THAN 34"x22" USE GRAPHIC SCALE

SYM	DESCRIPTION	DATE	APPR
1	APPROVAL SUBMISSION, REV 1	8/30/12	

NAVFAC

DES HKM | DR SNL
REVIEWED BY HKM
PM/DM
CHIEF ENG/ARCH HKM

DEPARTMENT OF THE NAVY
NAVAL FACILITIES ENGINEERING COMMAND
NORTHEAST IPT
NAVAL FACILITIES ENGINEERING COMMAND ~ MID-ATLANTIC
NAVAL STATION - NORFOLK, VIRGINIA
AQUA NY
NASSAU COUNTY, NEW YORK
MODIFICATIONS TO WATER TREATMENT FACILITY
POLYPHOSPHATE SYSTEM DETAILS

CODE ID. NO. 80091 | SIZE D
SCALE: 1/4"=1'-0"
MAXIMO NO. N62470-08-D-1001
JOB ORDER NO. WE-25
SPEC. NO.
CONSTR. CONTR. NO. 112G02223
NAVFAC DRAWING NO.
SHEET OF --
M-6.2

K:\112G02223 - Aqua Bethpage-Navy Project - H. Mitch\Drawings\Mechanical\02223_M6.dwg 10/02/2012 10:28

NOV 07 2012
39

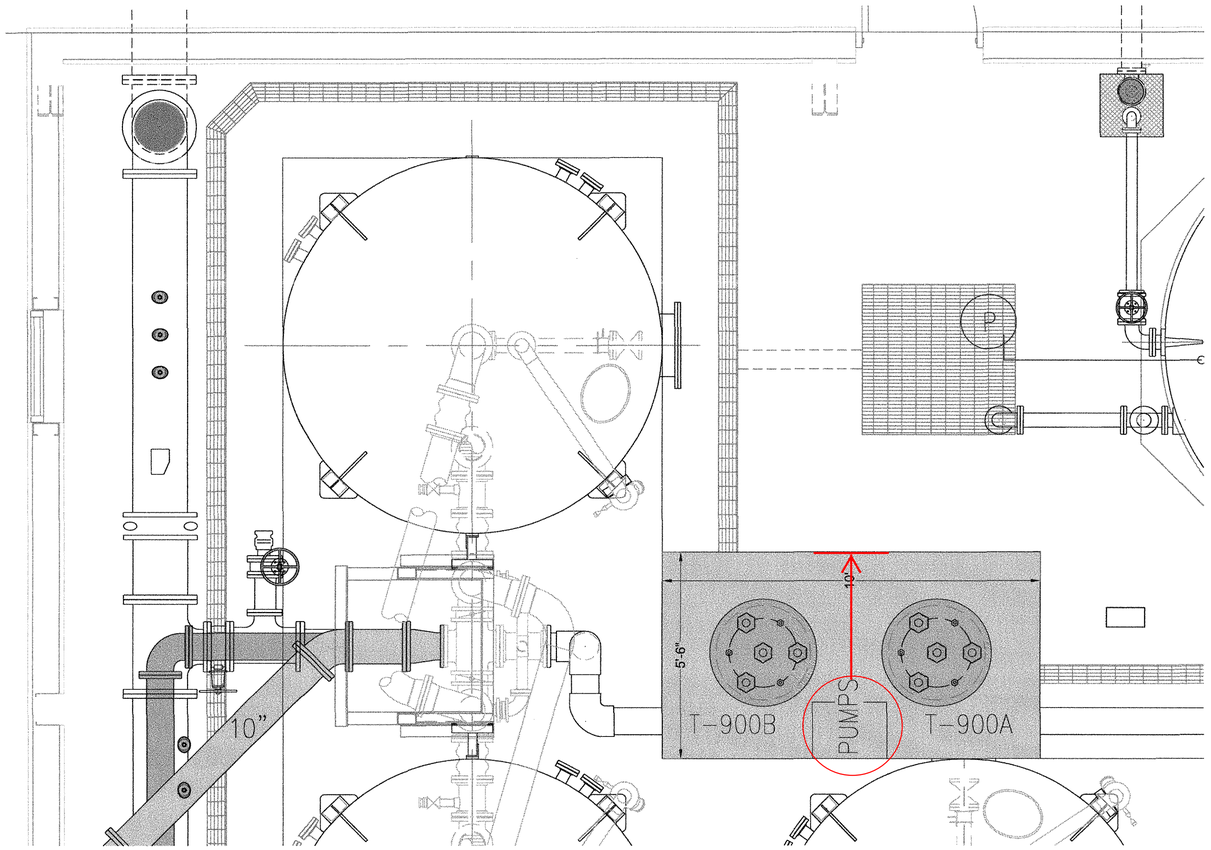

1 / M6.3 POLYPHOSPHATE SYSTEM PLAN VIEW
with 31" dia. Tanks (165 Gal.)

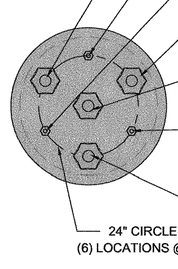

FITTING FOR PRIMARY VENT / OVERFLOW
2" PVC BULKHEAD FITTING W/ EPDM GASKET AND SOCKET END
2" SCH 80 UNION W/ SOCKET ENDS
2" SCH 80 PVC PIPE AS NEEDED TO OUTSIDE OF BUILDING

OUTLET TO PUMP
1/2" PVC BULKHEAD FITTING W/ EPDM GASKET
1/2" PVC COMPRESSION FITTING W/ 1/2" FNPT THREADS
1/2" PE TUBING TO PUMP (CONTINUOUS)

SPARE (OPTIONAL)

SPARE (OPTIONAL)

FITTING FOR EMERGENCY VENT
2" PVC BULKHEAD FITTING W/ EPDM GASKET AND SOCKET END
2" SCH 80 PVC PIPE AS NEEDED TO 1' ABOVE F.F.

FITTING FOR PRESSURE RELIEF DRAIN
1/2" PVC BULKHEAD FITTING W/ EPDM GASKET
1/2" PVC COMPRESSION FITTING W/ 1/2" FNPT THREADS
1/2" PE TUBING TO PUMP (CONTINUOUS)

FILL PORT
2" PVC BULKHEAD FITTING W/ EPDM GASKET AND SOCKET END
2" SCH. 80 ELL (90) W/ SOCKET ENDS
2" SCH 80 PVC PIPE AS NEEDED AS COUPLINGS
2" CAMLOCK FITTING WITH CAP
2" S.S. U-BOLT 6" LONG W/ NUTS & WASHERS

24" CIRCLE
(6) LOCATIONS @ 60°

2 / M-6.3 POLYPHOSPHATE TANK TOP DETAIL

CHECKLIST FOR ABOVEGROUND TANKS

Containment is to be 304SS, 3/16" thick - per response to RFI-019 dated 4/3/2013.

1. SECONDARY CONTAINMENT IS PROVIDED BY TANK IN A STAINLESS STEEL CONTAINER.
2. THE TANK IS FILLED MANUALLY BY HOSE FROM TANKER TRUCK
3. THE TANK IS PROVIDED WITH AN OPERATOR AT THE TANK AS A MEANS OF PREVENTING AN OVERFILL CONDITION.
4. ALL PIPES ARE ABOVE GROUND AND VISIBLE FOR INSPECTION.
5. THERE ARE NO SURFACE WATERS WITHIN 100' OF THE TANKS.
6. TANK SHALL BE LABELED WITH ITS DESIGNED WORKING CAPACITY, CONTENTS, NCHD IDENTIFICATION NUMBER AND INSTALLATION DATE.
7. THE TANK INSTALLATION CONFORMS TO ARTICLE XI OF THE NASSAU COUNTY PUBLIC HEALTH ORDINANCE, THE N.T.S. UNIFORM FIRE PREVENTION AND BUILDING CODE, AND 6NYCRR PART 599 IF IT IS A CHEMICAL TANK INSTALLATION.
8. THE TANK, PIPING AND ALL ANCILLARY EQUIPMENT SHALL BE INSTALLED IN ACCORDANCE WITH THE MANUFACTURERS RECOMMENDATIONS.
9. THE OWNER/OPERATOR SHALL OBTAIN A BUILDING PERMIT FOR THE TANK INSTALLATION IF IT IS REQUIRED FROM THE LOCAL BUILDING DEPARTMENT.
10. THE TANK PIPING MUST BE A MINIMUM OF 100' FROM ALL WATER SUPPLY WELLS. (EXCEPTION REQUESTED FROM NCDH)
11. THE ENGINEER SHALL NOTIFY THE NCHD 5 DAYS PRIOR TO THE BEGINNING OF ALL WORK.
12. IF DEWATERING IS REQUIRED, ALL NECESSARY PERMITS SHALL BE OBTAINED FROM THE NEW YORK STATE DEPARTMENT OF ENVIRONMENTAL CONSERVATION AND ANY OTHER AGENCY HAVING JURISDICTION.
13. THE TANK(S) AND ALL PIPING SHALL BE TESTED FOR TIGHTNESS USING A METHOD APPROVED BY THE NCHD.
14. THE TANK IS TRANSLUCENT AND THE LEVEL SHALL BE VISIBLE FROM THE FILL PORT.
15. ALL TANKS MUST BE A MINIMUM 10' AWAY FROM ALL WATER LINES.
16. THE CERTIFICATION WILL BE SUBMITTED TO THE NCHD UPON COMPLETION OF THE INSTALLATION IN ACCORDANCE WITH SECTION 11.0 OF THE REGULATION OF ARTICLE XI OF THE NASSAU COUNTY PUBLIC HEALTH ORDINANCE.
17. THE INSTALLTION AND PLACEMENT OF THE TANK AND PIPING SHALL CONFORM WITH NFPA #30 AND/OR NFPA #31.
18. NO FLOOR DRAINS SHALL BE IN THE SECONDARY CONTAINMENT SYSTEM.
19. DIKES AND DOUBLEWALL TANKS SHALL NOT HAVE ANY DRAIN OPENINGS.
20. THE DISCHARGE OF CONTAMINANTS TO FLOOR DRAINS CONNECTED TO DRYWELLS IS PROHIBITED UNLESS A PERMIT FOR SUCH DISCHARGE IS OBTAINED FROM THE UNDERGROUND INJECTION CONTROL (UIC) OFFICE OF THE UNITED STATES ENVIRONMENTAL PROTECTION AGENCY.
21. FLOOR DRAINS AND DRYWELLS AT THIS SITE ARE SUBJECT TO INSPECTION BY THE NASSAU COUNTY DEPARTMENT OF HEALTH AND/OR THE USEPA TO DETERMINE THE POINTS OF CONTAINMENT DISCHARGES. AS A RESULT OF SUCH INSPECTION THE PROPERTY OWNER OR OPERATOR MAY BE REQUIRED BY THE USEPA TO INVESTIGATE AND REMEDIATE CONTAMINATION RESULTING FROM PAST CONTAINMENT DISCHARGES.
22. CHEMICAL FIRE SUPPRESSION SYSTEMS MUST BE FIELD INSTALLED BY AN INSTALLER LICENSED BY THE NASSAU COUNTY FIRE MARSHALL AND TESTED IN THE PRESENCE OF A REPRESENTATIVE OF THE FIRE MARSHALL.
23. DEPTH TO GROUNDWATER IS APPROXIMATELY 23 FEET.
24. TANK INSTALLED IN A NON-TRAFFIC AREA AND NOT EXPOSED TO PHYSICAL HAZARDS.
25. SECONDARY CONTAINMENT CAPACITY:
    WORKING-275 GALLONS (8"H)
    MAXIMUM-410 GALLONS (12H)
26. ALL VALVES, PUMPS AND ABOVE GROUND PIPING TO BE LABELED WITH THE NAME OF STORED SUBSTANCE.
27. VENTILATION INSIDE THE BUILDING IS ADEQUATE FOR THE CHEMICAL BEING STORED.
28. LEAK DETECTION IS CONDUCTED VIA VISUAL INSPECTION AND LOG BOOK.
29. SHELF SUBMERSIBLE PUMP SHALL BE MAINTAINED TO FACILITATE REMOVAL OF SECONDARY CONTAINMENT CONTENTS.

NASSAU COUNTY DEPARTMENT OF HEALTH
DIVISION OF ENVIRONMENTAL HEALTH
These plans are hereby approved
SHEET 40 OF 69
See first sheet hereof for date and signature

UNAUTHORIZED ALTERATION OR ADDITION TO THIS PLAN IS A VIOLATION OF SECTION 7209 OF THE NEW YORK STATE EDUCATION LAW, UNLESS THE PERSON IS ACTING UNDER THE DIRECTION OF A LICENSED PROFESSIONAL ENGINEER. ANY PLAN ALTERATIONS BY ANOTHER ENGINEER MUST BE MARKED AS SUCH, INCLUDING THE SIGNATURE AND SEAL OF THE ALTERING ENGINEER.

CAUTION: IF SHEET IS LESS THAN 34"x22" USE GRAPHIC SCALE

REV	DATE	DESCRIPTION	BY
1	8/30/12	APPROVAL SUBMISSION, REV 1	HKM

DEPARTMENT OF THE NAVY
NAVAL FACILITIES ENGINEERING COMMAND ~ MID-ATLANTIC
NAVAL STATION - NORFOLK, VIRGINIA
NORTHEAST IPT
AQUA NY
NASSAU COUNTY, NEW YORK
MODIFICATIONS TO WATER TREATMENT FACILITY
POLYPHOSPHATE SYSTEM DETAILS

DES HKM | DR SNL
REVIEWED BY HKM
PM/DM
CHIEF ENG/ARCH HKM

CODE ID. NO. 80091 | SIZE D
SCALE: 1/4"=1'-0"
MAXIMO NO. N62470-08-D-1001
JOB ORDER NO. WE-25
SPEC. NO.
CONSTR. CONTR. NO. 112G02223
NAVFAC DRAWING NO.
SHEET OF --
M-6.3

40

NOV 07 2012

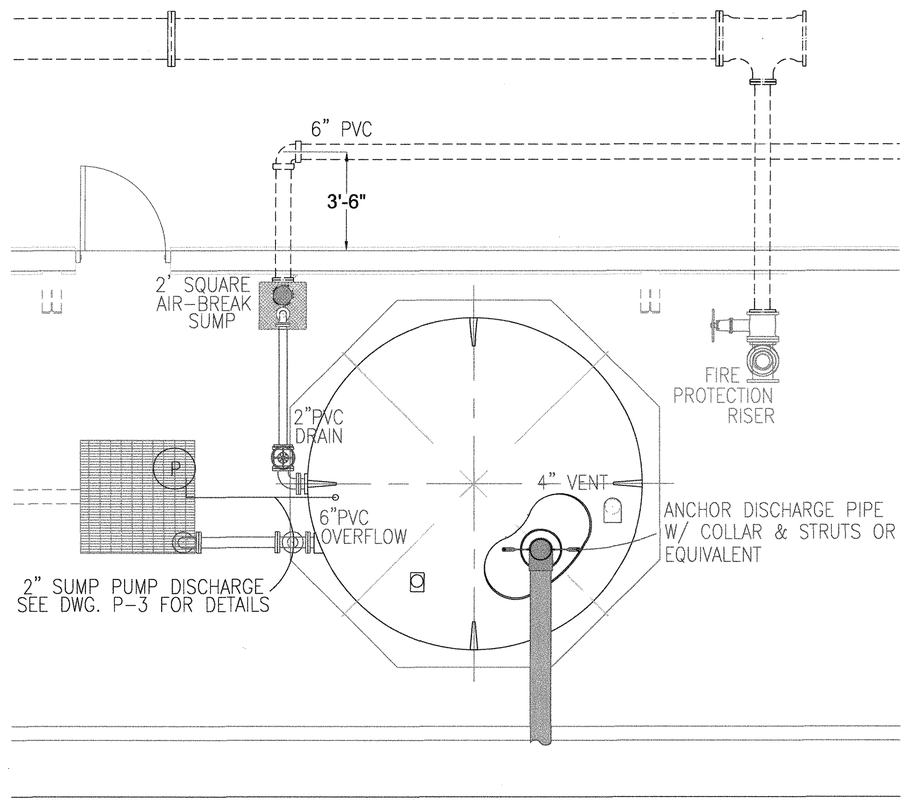

2 / M7 AIR BREAK SUMP PLAN VIEW

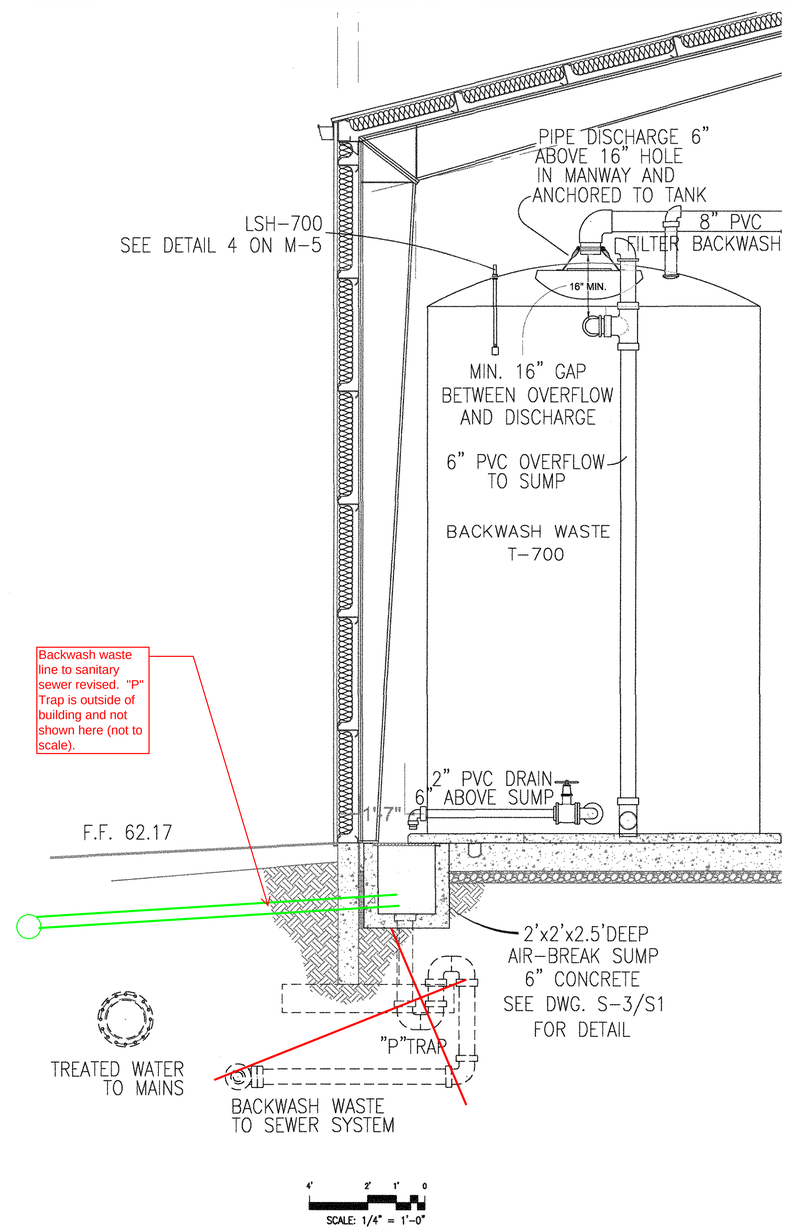

1 / M7 SEWER AIR-BREAK SUMP DETAIL

NASSAU COUNTY DEPARTMENT OF HEALTH
DIVISION OF ENVIRONMENTAL HEALTH
These plans are hereby approved
SHEET 41 OF 69
See first sheet hereof for date and signature

UNAUTHORIZED ALTERATION OR ADDITION TO THIS PLAN IS A VIOLATION OF SECTION 7209 OF THE NEW YORK STATE EDUCATION LAW, UNLESS THE PERSON IS ACTING UNDER THE DIRECTION OF A LICENSED PROFESSIONAL ENGINEER. ANY PLAN ALTERATIONS BY ANOTHER ENGINEER MUST BE MARKED AS SUCH, INCLUDING THE SIGNATURE AND SEAL OF THE ALTERING ENGINEER.

CAUTION: IF SHEET IS LESS THAN 34"x22" USE GRAPHIC SCALE

SYM	DESCRIPTION	DATE	APPR
1	APPROVAL SUBMISSION, REV 1	8/11/12	-

NAVFAC

STATE OF NEW YORK — DAVID DANIEL SEYMACK — 020336 — LICENSED PROFESSIONAL ENGINEER

DES	HKM	DR	SNL
REVIEWED BY	HKM		
PM/DM			
CHIEF ENG/ARCH	HKM		

DEPARTMENT OF THE NAVY
NAVAL FACILITIES ENGINEERING COMMAND
NAVAL FACILITIES ENGINEERING COMMAND ~ MID-ATLANTIC
NORTHEAST IPT — NAVAL STATION - NORFOLK, VIRGINIA
AQUA NY — NASSAU COUNTY, NEW YORK

MODIFICATIONS TO WATER TREATMENT FACILITY

BACKWASH SUMP AIR-BREAK DETAILS

CODE ID. NO. 80091	SIZE D
SCALE:	AS NOTED
MAXIMO NO. N82470-08-D-1001	
JOB ORDER NO. WE-25	
SPEC. NO.	
CONSTR. CONTR. NO. 112G02223	
NAVFAC DRAWING NO.	
SHEET	OF --

M-7

NOV 07 2012

K:\112G02223 -- Aqua Bethpage-Navy Project -- H. Mital\Drawings\Mechanical\02223_M7.dwg 06/07/2012 10:06

41

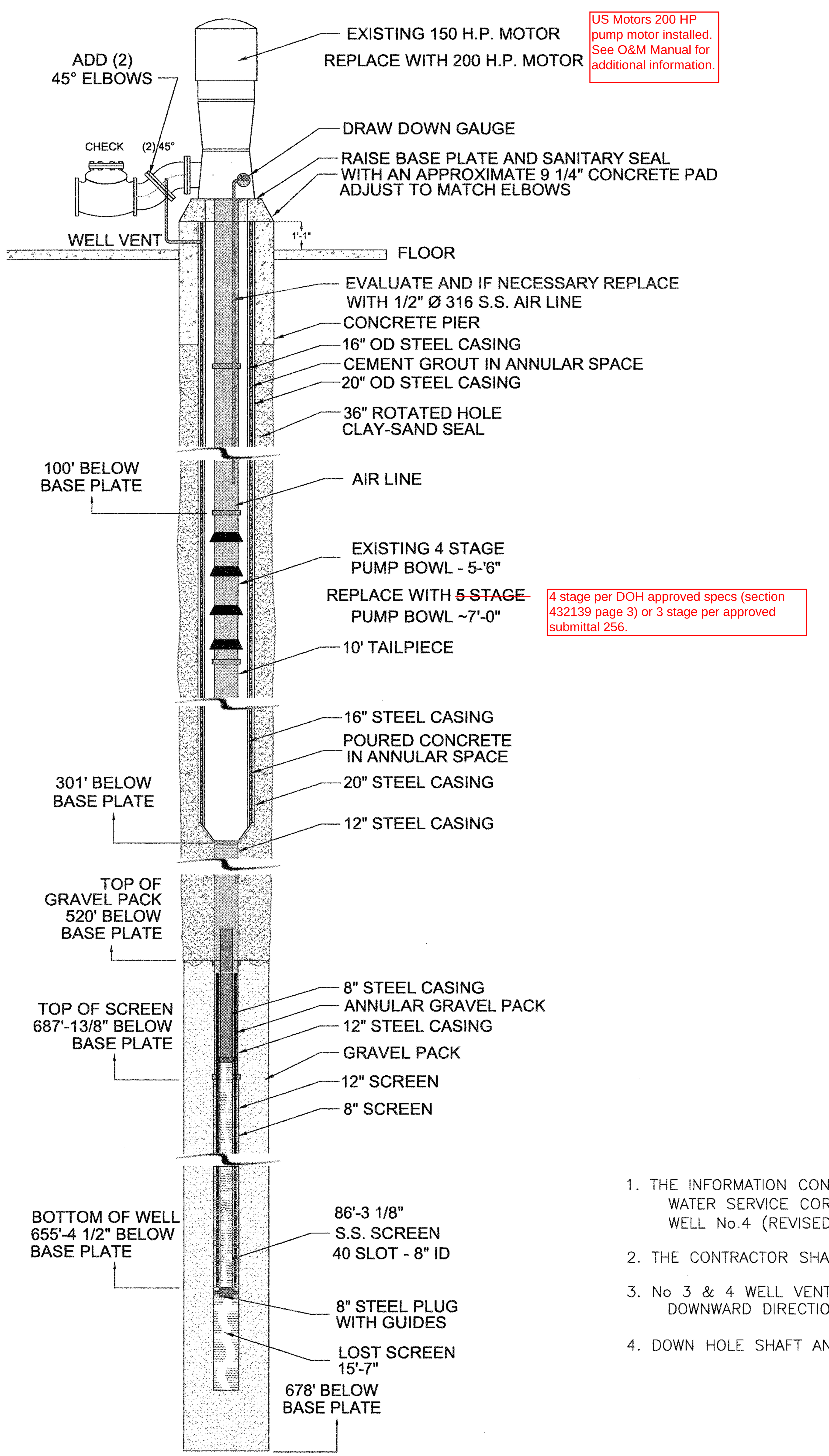

1 / M8 WELL PUMP 3S DETAILS

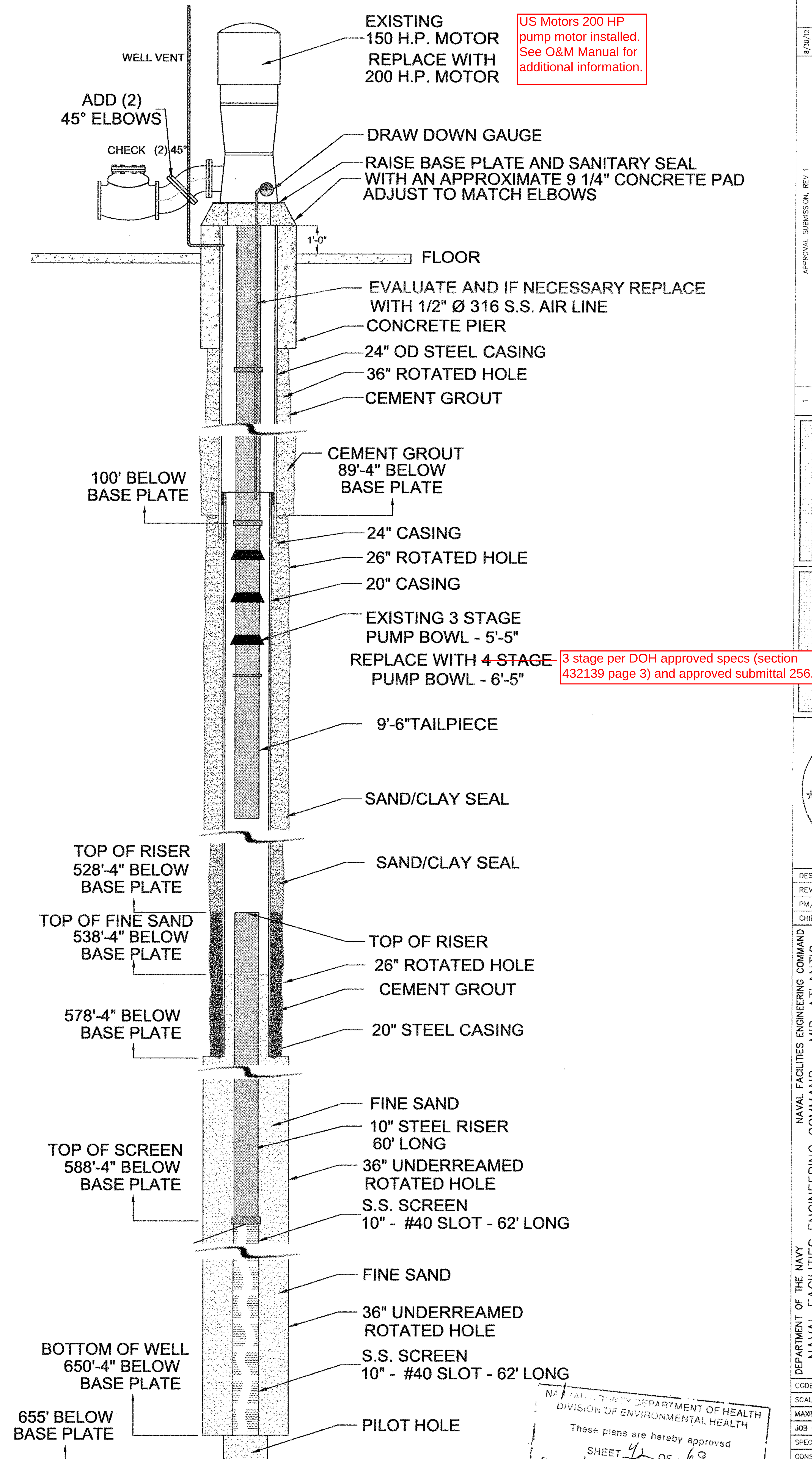

2 / M8 WELL PUMP 4S DETAILS

1. THE INFORMATION CONTAINED ON THIS DRAWING IS BASED ON JULY 28, 1969 NEW YORK WATER SERVICE CORPORATION DRAWINGS FOR WELL No. 3 (REVISED JUNE, 1990) AND WELL No.4 (REVISED 1989). ACTUAL FIELD CONDITIONS MAY VARY.
2. THE CONTRACTOR SHALL CONDUCT CLEAN AND STERILIZE THE WELL.
3. No 3 & 4 WELL VENT TO TERMINATE A MINIMUM OF 18 INCHED ABOVE FLOOR LEVEL IN A DOWNWARD DIRECTION AND BE EQUIPPED WITH 24 MESH SCREENING.
4. DOWN HOLE SHAFT AND PUMPS TO BE INSPECTED AND IF NECESSARY REPAIR / REPLACE.

UNAUTHORIZED ALTERATION OR ADDITION TO THIS PLAN IS A VIOLATION OF SECTION 7209 OF THE NEW YORK STATE EDUCATION LAW, UNLESS THE PERSON IS ACTING UNDER THE DIRECTION OF A LICENSED PROFESSIONAL ENGINEER. ANY PLAN ALTERATIONS BY ANOTHER ENGINEER MUST BE MARKED AS SUCH, INCLUDING THE SIGNATURE AND SEAL OF THE ALTERING ENGINEER.

NEW YORK STATE DEPARTMENT OF HEALTH
DIVISION OF ENVIRONMENTAL HEALTH
These plans are hereby approved
SHEET 41 OF 69
See first sheet hereof for date and signature

CAUTION: IF SHEET IS LESS THAN 34"x22" USE GRAPHIC SCALE

DES HKM | DR SNL
REVIEWED BY HKM
PM/DM
CHIEF ENG/ARCH HKM

DEPARTMENT OF THE NAVY
NAVAL FACILITIES ENGINEERING COMMAND
NAVAL FACILITIES ENGINEERING COMMAND ~ MID-ATLANTIC
NORTHEAST IPT
NAVAL STATION - NORFOLK, VIRGINIA
AQUA NY
NASSAU COUNTY, NEW YORK
MODIFICATIONS TO WATER TREATMENT FACILITY
PRODUCTION WELL DETAILS

CODE ID. NO. 80091 | SIZE D
SCALE: AS NOTED
MAXIMO NO. N62470-08-D-1001
JOB ORDER NO. WE-25
SPEC. NO.
CONSTR. CONTR. NO. 112G02223
NAVFAC DRAWING NO.
SHEET OF --
M-8

K:\112G02223 - Aqua Bethpage-NAvy Project - H. Mital\Drawings\Mechanical\02223_M8.dwg 08/31/2012 14:46

APPROVAL SUBMISSION, REV 1 8/30/12

NOV 07 2012
42

LEGEND:

FLUORESCENT LIGHTING FIXTURE, SURFACE, PENDANT OR LAY-IN MOUNTING.

INCANDESCENT, MERCURY VAPOR, METAL HALIDE OR HIGH PRESSURE SODIUM LIGHTING FIXTURE, SURFACE OR PENDANT MOUNTED.

INCANDESCENT, MERCURY VAPOR, METAL HALIDE OR HIGH PRESSURE SODIUM LIGHTING FIXTURE, WALL OR BUILDING STEEL MOUNTED.

INCANDESCENT, MERCURY VAPOR OR HIGH PRESSURE SODIUM LIGHTING FIXTURE, STANCHION MOUNTED.

EMERGENCY LIGHT UNIT, ARROWS INDICATE BEAM DIRECTION.

G

TYPICAL CONDUIT DESIGNATION, ARROWHEAD INDICATE HOME RUN TO SOURCE.

CONDUIT TURNING UPWARD OR TOWARD OBSERVER.

CONDUIT TURNING DOWNWARD OR AWAY FROM OBSERVER.

CONDUIT, EXPOSED INSTALLATION, 3/4" UNLESS NOTED OTHERWISE.

CONDUIT, CONCEALED INSTALLATION, OR EXPOSED ON CLG BELOW 3/4" UNLESS NOTED OTHERWISE.

WP

CONVENIENCE RECEPTACLE, DUPLEX OUTLET TYPICAL:
WP INDICATES WEATHERPROOF.

WP
S
a

SINGLE POLE SWITCH, TYPICAL DESIGNATION AS FOLLOWS:
a PLACED NEAR SYMBOL INDICATES CONTROL OF THOSE FIXTURES WITH THE SAME LETTER BY THIS SWITCH. NO DESIGNATION INDICATES ALL FIXTURES ARE CONTROLLED BY AREA SWITCH. NO AREA SWITCH DENOTES FIXTURES CONTROLLED AT LIGHTING PANEL.
WP INDICATES WEATHERPROOF.

S
3

THREE-WAY SWITCH.

MOTOR, TOTALLY ENCLOSED FAN COOLED, INDUCTION TYPE, HORIZONTALLY MOUNTED.

MOTOR, TOTALLY ENCLOSED FAN COOLED, INDUCTION TYPE, VERTICALLY MOUNTED.

DISCONNECT SWITCH

GENERAL NOTES:

1. CONDUIT & GROUNDING INSTALLATION SHALL BE IN ACCORDANCE WITH ALL APPLICABLE LOCAL CODES AND ORDINANCES, SPECIFICATIONS, AND THE LATEST EDITION OF THE UNITED STATES OF AMERICA N. F. P. A. NATIONAL ELECTRIC CODE.
2. UNLESS OTHERWISE NOTED ALL EMBEDDED CONDUIT ELEVATIONS ARE TO THE CENTER LINE OF THE CONDUIT UNLESS NOTED OTHERWISE.
3. CONDUIT JOINTS SHALL BE MADE WITH STANDARD COUPLINGS. CONDUIT ENDS SHALL BUTT TIGHT IN COUPLINGS. ALL CONDUIT CONNECTIONS SHALL BE WATERTIGHT AND COATED PERMANENTLY WITH SEMI-DUCTIBLE SEALING COMPOUND.
4. ALL TEMPLATES AND SUPPORTS REQUIRED TO MAINTAIN CLEARANCES AND SUPPORT OF CONDUITS AND GROUND WIRE DURING CONCRETE POURS SHALL BE INSTALLED.
5. ALL EMBEDDED CONDUIT SHALL PROJECT 6" ABOVE FINISHED ELEVATION AND/OR WALL FROM WHICH IT EMERGES UNLESS NOTED OTHERWISE.
6. ALL WORK THAT WILL BE CONCEALED SHALL BE INSPECTED AND APPROVED BY FIELD ENGINEER.
7. ALL CONDUIT RUNS SHALL BE GROUNDED AT BOTH ENDS USING APPROVED TYPE GROUNDING BUSHINGS, AND CONNECTED TO GROUND SYSTEM.
8. CONDUIT ENCASED IN CONCRETE SHALL HAVE A 3" MINIMUM CONCRETE ENVELOPE FROM OUTSIDE WALL OF CONDUIT.
9. CONDUIT SUPPORTS AND/OR CLAMPS SHALL BE SPACED AT INTERVALS NOT EXCEEDING 8 FEET.
10. AFTER CONDUIT IS INSTALLED, OPEN ENDS SHALL BE CAPPED WITH CLOSED TYPE IRON CONDUIT BUSHING AND MAINTAINED DURING CONSTRUCTION TO PREVENT ENTRANCE OF MOISTURE AND DIRT.
11. CONDUIT CAPPED TERMINATIONS SHALL BE REPLACED WITH INSULATED BUSHINGS PRIOR TO PULLING CABLE.
12. WHERE STANDARD LENGTHS OF CONDUIT ARE CUT IN FIELD, CUTS SHALL BE BE SQUARE AND CUT END OF EACH CONDUIT SHALL BE CAREFULLY REAMED ON INSIDE BEFORE INSTALLING.
13. ALL CONDUIT ELBOWS, SWEEPS, & RISERS SHALL BE RIGID GALVANIZED STEEL
14. MINIMUM SIZE OF EMBEDDED CONDUIT SHALL BE 1 INCH.
15. CONTRACTOR IS TO CHECK AND VERIFY EXISTING UTILITIES BEFORE EXCAVATION.
16. NUMBER ADJACENT TO FIXTURE INDICATES CIRCUIT NUMBER.

UNAUTHORIZED ALTERATION OR ADDITION TO THIS PLAN IS A VIOLATION OF SECTION 7209 OF THE NEW YORK STATE EDUCATION LAW, UNLESS THE PERSON IS ACTING UNDER THE DIRECTION OF A LICENSED PROFESSIONAL ENGINEER. ANY PLAN ALTERATIONS BY ANOTHER ENGINEER MUST BE MARKED AS SUCH, INCLUDING THE SIGNATURE AND SEAL OF THE ALTERING ENGINEER.

NASSAU COUNTY DEPARTMENT OF HEALTH
DIVISION OF ENVIRONMENTAL HEALTH
These plans are hereby approved
SHEET 43 OF 69
See first sheet hereof for date and signature

	DATE	APPR
STM	9/9/2011	-

NASSAU COUNTY DEPT. OF HEALTH SUBMITTAL

NAVFAC

STATE OF NEW YORK · ROGER A. STRAUS · 088075-1 · LICENSED PROFESSIONAL ENGINEER

9.7.11

DES GESSLER | DR HORTON
REVIEWED BY GESSLER
PM/DM DPB
CHIEF ENG/ARCH GESSLER

DEPARTMENT OF THE NAVY
NAVAL FACILITIES ENGINEERING COMMAND ~ MID-ATLANTIC
NAVAL STATION - NORFOLK, VIRGINIA
NORTHEAST IPT
AQUA NY
NASSAU COUNTY, NEW YORK
MODIFICATIONS TO WATER TREATMENT FACILITY

ELECTRICAL - LEGENDS & GENERAL NOTES

CODE ID. NO. 80091 | SIZE D
SCALE:
MAXIMO NO. N62470-08-D-1001
JOB ORDER NO. WE-25
SPEC. NO.
CONSTR. CONTR. NO. 112G02223
NAVFAC DRAWING NO.
SHEET OF --

E-1

CAUTION: IF SHEET IS LESS THAN 34"x22" USE GRAPHIC SCALE

43 NOV 07 2012

UNAUTHORIZED ALTERATION OR ADDITION TO THIS PLAN IS A VIOLATION OF SECTION 7209 OF THE NEW YORK STATE EDUCATION LAW, UNLESS THE PERSON IS ACTING UNDER THE DIRECTION OF A LICENSED PROFESSIONAL ENGINEER. ANY PLAN ALTERATIONS BY ANOTHER ENGINEER MUST BE MARKED AS SUCH, INCLUDING THE SIGNATURE AND SEAL OF THE ALTERING ENGINEER.

12KV – 3PH – 60HZ BY LONG ISLAND POWER AUTHORITY (LIPA) NATIONAL GRID

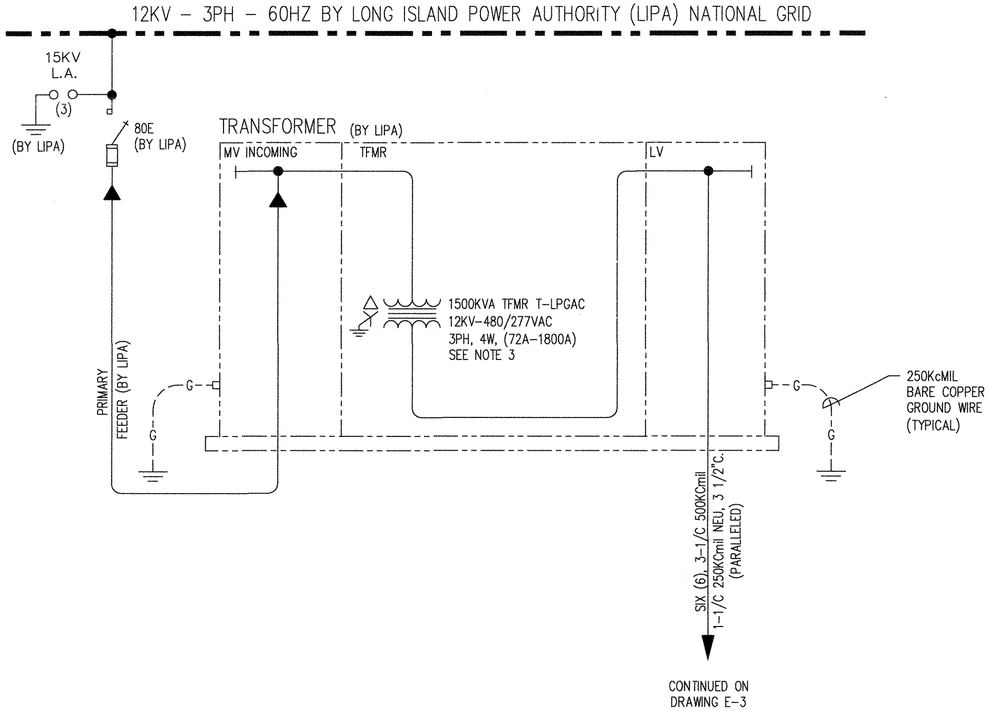

SINGLE LINE DIAGRAM LEGEND

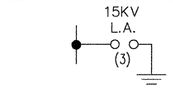

LIGHTNING ARRESTOR, RATING AS NOTED: "(3)" – QUANTITY

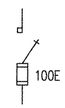

GANG–OPERATED, HI–VOLTAGE FUSED DISC. SWITCH, 3 POLE, RATING AS NOTED

POWER TRANSFORMER, RATING AS NOTED ("Δ" DELTA PRIMARY, "Y" WYE GROUNDED SECONDARY)

CURRENT TRANSFORMER, RATING AS NOTED "3" – QUANTITY

POTENTIAL TRANSFORMER, RATING AS NOTED "1" – QUANTITY

CIRCUIT BREAKER ("MCB"–MAIN CIRCUIT BREAKER, "FCB"–FEEDER CIRCUIT BREAKER, "1200AF"–FRAME SIZE, "1200AT"–TRIP SETTING, "CB"–MOLDED CASE CIRCUIT BREAKER)

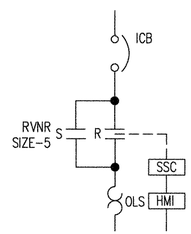

MOTOR STARTER, SOFT START, SOLID STATE ("ICB"– INSTANTANEOUS BREAKER, RATING BY MANUFACTURER, "RVNR"–REDUCED VOLTAGE NON–REVERSING, "S" – START, "R" – RUN, "SIZE–5"–STARTER SIZE, "OLS"–THREE (3) OVERLOADS, "SSC" SOFT START CONTROLLER, "HMI" – HUMAN MACHINE INTERFACE)

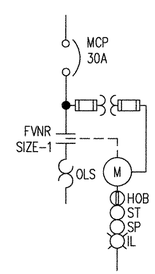

MOTOR STARTER, DRAW–OUT COMPARTMENT TYPE, 480–120V CONTROL POWER TRANSFORMER w/ PRI. & SEC. FUSES ("MCP"–MOTOR CIRCUIT PROTECTOR, "30A"–MOTOR CIRCUIT PROTECTOR RATING, "FVNR"–FULL VOLTAGE NON–REVERSING, "SIZE–1"–STARTER SIZE, "OLS"–THREE (3) OVERLOADS, "HOB" – HAND–OFF–BACKWASH, "ST" – START, "SP" – STOP, "IL" – RUN RED INDICATING LIGHT).

SINGLE LINE DIAGRAM LEGEND (CONTINUED)

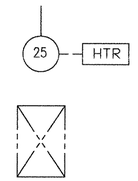

MOTOR, TOTALLY ENCLOSED FAN COOLED ("25" – HORSEPOWER) ("HTR" – MOTOR HEATER)

CONTROL FURNISHED AS PART OF EQUIPMENT VENDOR'S PACKAGE

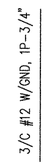

FEEDER, w/ ONE 3/C No. 12 w/GND POWER CABLE IN 3/4" CONDUIT ("1P" DENOTES CONDUIT DESIGNATION, "P" POWER, "C" CONTROL)

STRESS RELIEF CONE (AS REQUIRED)

CONTROL DEVICE ("JOA"– JOG–OFF–AUTO SELECTOR SWITCH, "HOA"– HAND–OFF–AUTO SELECTOR SWITCH, "ST"– START PUSHBUTTON, "SP"– STOP PUSHBUTTON, "FIT"– FLOW INDICATION TRANSMITTER, "LSH"– LEVEL SWITCH HIGH, "LSL"– LEVEL SWITCH LOWN, "LT"– LEVEL TRANSMITTER, "PS"– PRESSURE SWITCH, "PDIT"– PRESSURE DIFFERENTIAL INDICATE TRANSMITTER, "T"– THERMOSTAT)

NASSAU COUNTY DEPARTMENT OF HEALTH
DIVISION OF ENVIRONMENTAL HEALTH
These plans are hereby approved
SHEET 44 OF 69
See first sheet hereof for date and signature

NOTE:

1. GROUND WIRE SHALL CONTINUE TO GROUND BUS AND TERMINATE.
2. ALL MCC–LPGAC BUCKETS SHALL BE SUPPLIED WITH LOCKABLE HANDLES.
3. THE PROJECTS BALANCED 3 PHASE LOAD IS 765KVA. THE SIZE OF THE PRIMARY FEEDER, PROTECTION AND TRANSFORMER IS TO THE DISCRETION OF LONG ISLAND POWER AUTHORITY (LIPA); HOWEVER, THE 1500KVA TRANSFORMER RATING IS ANTICIPATING FUTURE LOADS. THE RATING PROVIDED IS THE MAXIMUM.

REFERENCE DRAWING:

E–3 SINGLE LINE DIAGRAM – SHT. 3

CAUTION: IF SHEET IS LESS THAN 34"x22" USE GRAPHIC SCALE

SYM	DESCRIPTION	DATE	APPR
·	NASSAU COUNTY DEPT. OF HEALTH SUBMITTAL	11/9/2011	

NAVFAC

STATE OF NEW YORK · ROGER A. GRAY · 088075-1 · LICENSED PROFESSIONAL ENGINEER

DES GESSLER | DR HORTON
REVIEWED BY GESSLER
PM/DM DPB
CHIEF ENG/ARCH GESSLER

DEPARTMENT OF THE NAVY
NAVAL FACILITIES ENGINEERING COMMAND ~ MID–ATLANTIC
NORTHEAST IPT NAVAL STATION – NORFOLK, VIRGINIA
AQUA NY NASSAU COUNTY, NEW YORK
MODIFICATIONS TO WATER TREATMENT FACILITY

ELECTRICAL - SINGLE LINE DIAGRAM - SHT. 1

CODE ID. NO. 80091 | SIZE D
SCALE:
MAXIMO NO. N62470–08–D–1001
JOB ORDER NO. WE–25
SPEC. NO.
CONSTR. CONTR. NO. 112G02223
NAVFAC DRAWING NO.
SHEET OF ––

E-2

NOV 07 2012
44

UNAUTHORIZED ALTERATION OR ADDITION TO THIS PLAN IS A VIOLATION OF SECTION 7209 OF THE NEW YORK STATE EDUCATION LAW, UNLESS THE PERSON IS ACTING UNDER THE DIRECTION OF A LICENSED PROFESSIONAL ENGINEER. ANY PLAN ALTERATIONS BY ANOTHER ENGINEER MUST BE MARKED AS SUCH, INCLUDING THE SIGNATURE AND SEAL OF THE ALTERING ENGINEER.

MOTOR CONTROL CENTER MCC-LPGAC-N
(LOCATED IN ELECTRICAL ROOM)

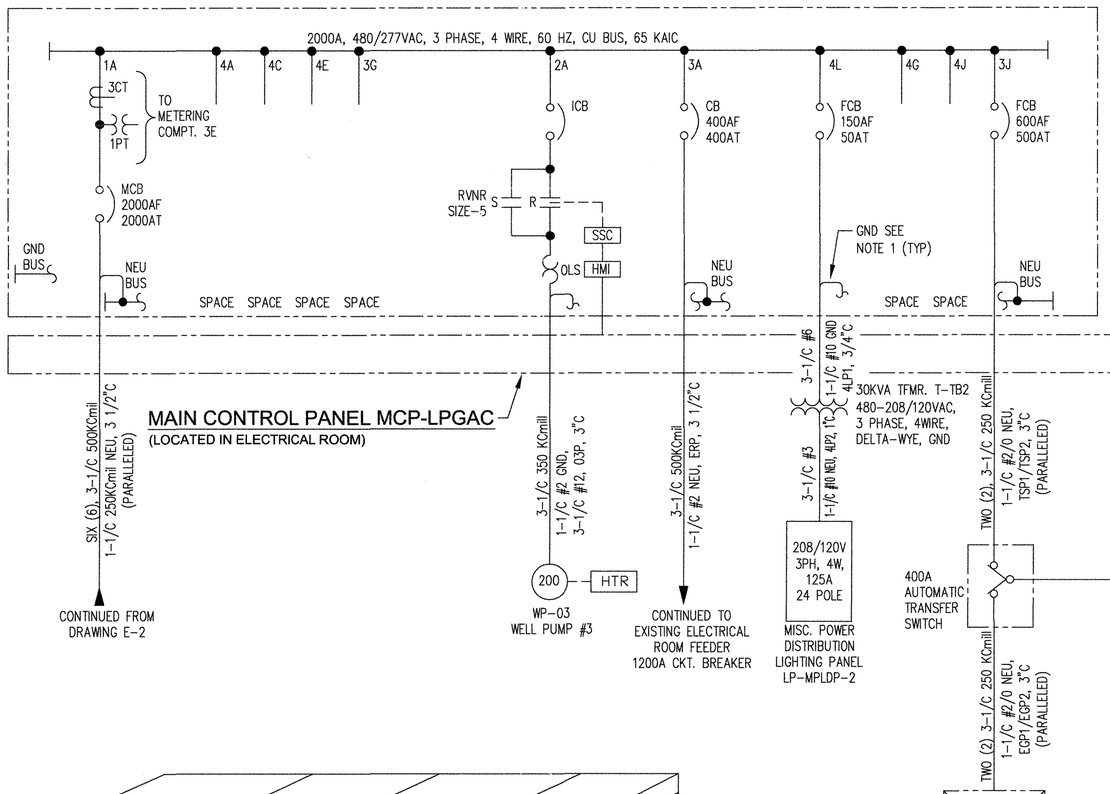

MOTOR CONTROL CENTER MCC-LPGAC-C
(LOCATED IN ELECTRICAL ROOM)

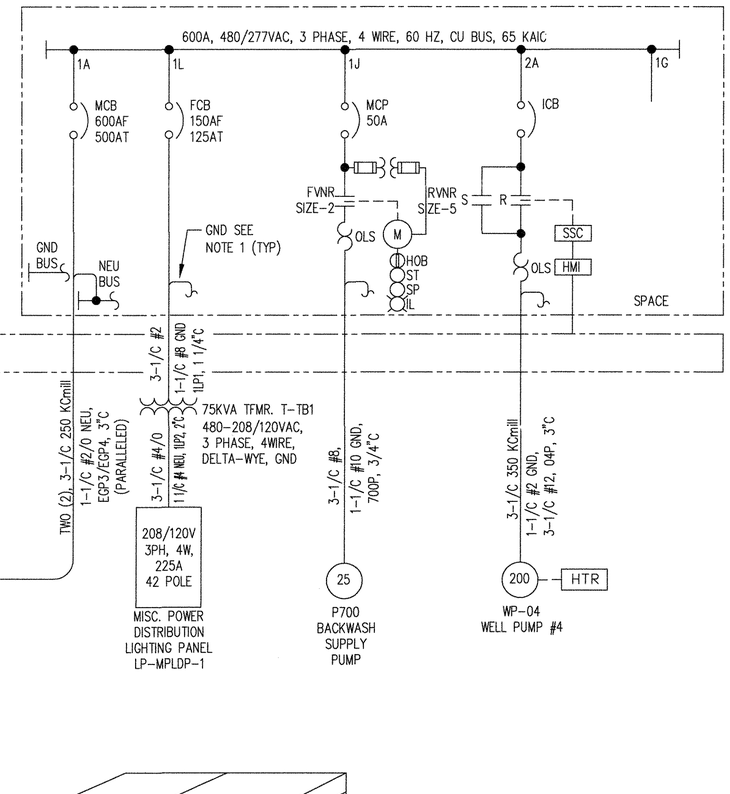

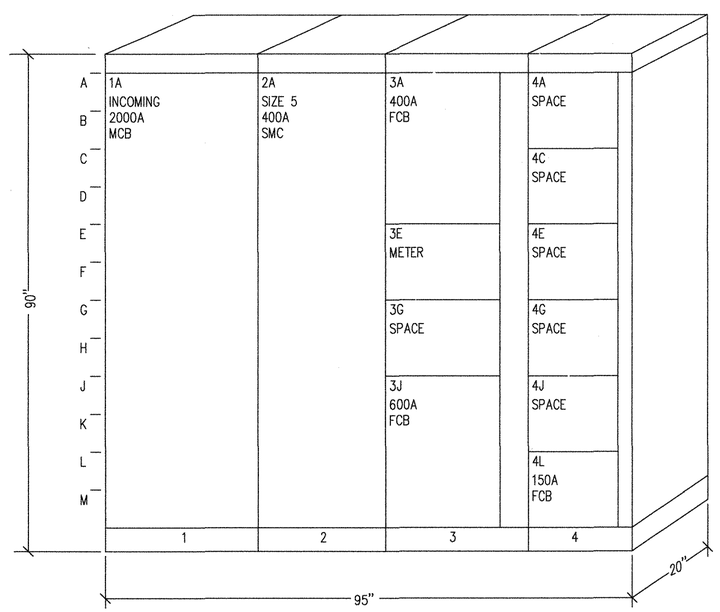

MOTOR CONTROL CENTER MCC-LPGAC-N
(LOCATED IN ELECTRICAL ROOM)

Refer to the following five pages (Schneider Electric Drawing # 31309132-008-01 & 02, 003-01, 005-01, and 711-01) for sizing and dimensions of electrical equipment.

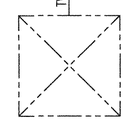

NATURAL GAS GENERATOR
WITH WEATHERPROOF ENCLOSURE
260KW
325KVA,
277/480VAC
391.2A

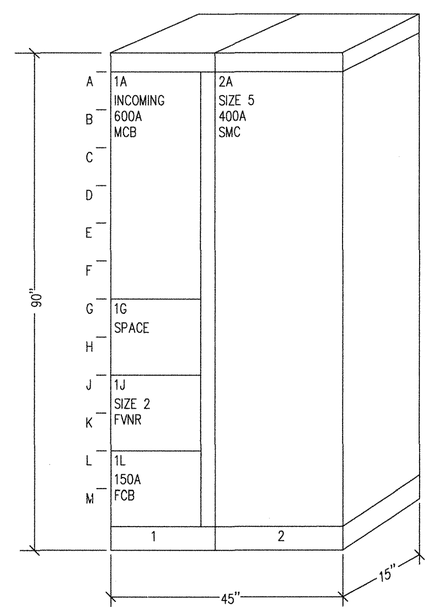

MOTOR CONTROL CENTER MCC-LPGAC-C(LOCATED IN ELECTRICAL ROOM)

NASSAU COUNTY DEPARTMENT OF HEALTH
DIVISION OF ENVIRONMENTAL HEALTH
These plans are hereby approved
SHEET 45 OF 69
See first sheet hereof for date and signature

NOTE:

1. FOR LEGEND & NOTES SEE DRAWING E-2.

REFERENCE DRAWING:

E-2 SINGLE LINE DIAGRAM – SHT. 1

CAUTION: IF SHEET IS LESS THAN 34"x22" USE GRAPHIC SCALE

SYM	DESCRIPTION	DATE	APPR
	NASSAU COUNTY DEPT. OF HEALTH SUBMITTAL	9/9/2011	

NAVFAC

STATE OF NEW YORK
086075-1
PROFESSIONAL ENGINEER
LICENSED

DES GESSLER | DR HORTON
REVIEWED BY GESSLER
PM/DM DPB
CHIEF ENG/ARCH GESSLER

DEPARTMENT OF THE NAVY
NAVAL FACILITIES ENGINEERING COMMAND
NORTHEAST IPT
AQUA NY

NAVAL FACILITIES ENGINEERING COMMAND ~ MID-ATLANTIC
NAVAL STATION – NORFOLK, VIRGINIA

NASSAU COUNTY, NEW YORK
MODIFICATIONS TO WATER TREATMENT FACILITY

ELECTRICAL - SINGLE LINE DIAGRAM - SHT. 2

CODE ID. NO. 80091 | SIZE D
SCALE:
MAXIMO NO. N62470-08-D-1001
JOB ORDER NO. WE-25
SPEC. NO.
CONSTR. CONTR. NO. 112G02223
NAVFAC DRAWING NO.
SHEET OF --

E-3

45 NOV 07 2012

REV	DESCRIPTION	BY	DATE									
A	CHANGED FRONT COVERS	TSH	1/03/14	B	CHANGED THE TB DEPTH	TSH	1/10/14	–	----	--	--/--/--
				C	REVISED: THRU BUS DEPTH	KPC	01/13/14	–	----	--	--/--/--

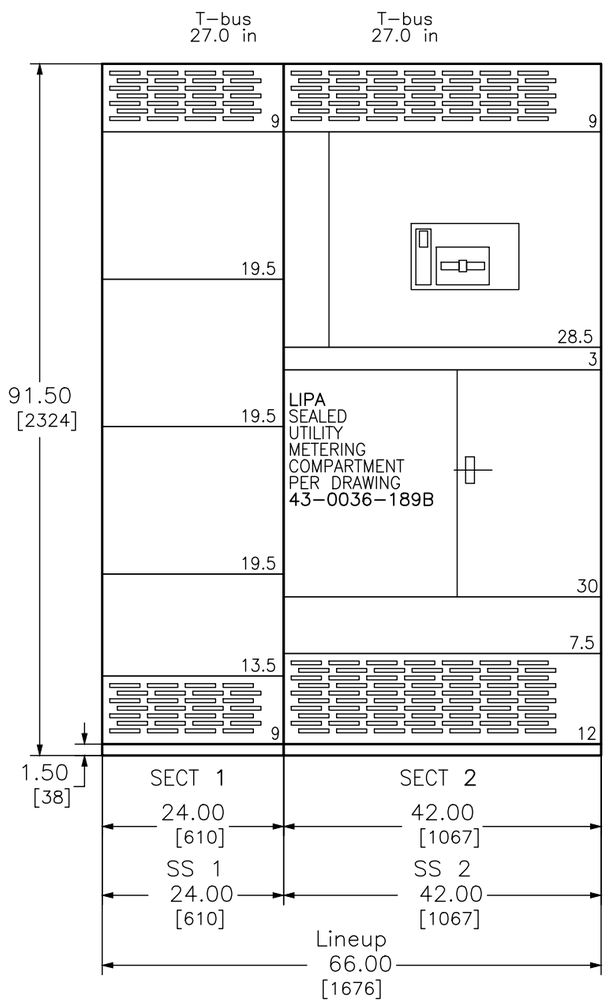

SWITCHBOARD GENERAL NOTES

PRODUCT DESCRIPTION & RATINGS

Power System Data

480Y/277V 3Ph 4W 60Hz / 3 Phase Wye
Solidly Grounded
System Short Circuit Current Rating: 100kA RMS
Incoming Section 2 Cable Through the Bottom Right of Lineup

Bus System Data

2000A Silver Plated Copper Main Bus
(4) .25x1.50 IN/6x38 mm Cu Bus Bar Per Phase/Neutral
(1) .25x.875 IN/6x22 mm Cu Ground Bus

Enclosure Data

Type 1 Free Standing
Exterior Paint Color: ANSI 49
Front & Right Accessibility Required
Handling: Rollers & Lifting Assemblies
Nameplate Mounting Type: Screw–on (Field Installed)
Equipment Nameplate: White Surface/Black Letters
Device Nameplate: White Surface / Black Letters
Utility sealing hardware installed for unmetered bus compartments

Estimated Shipping Weight

Shipping Split 1 530.00 lbs / 240.41 kgs
Shipping Split 2 1162.00 lbs / 527.08 kgs
Complete Lineup 1692.00 lbs / 767.49 kgs

Code Standards

U.L. Deadfront and suitable for use as Service Entrance when not more than six (6) disconnecting means are provided.

Rating Nameplates

ST1– Deadfront– Section Bus 2000A
ST2– Service Entrance – Section Bus 2000A

PRODUCT INFORMATION

Wiring

All wiring to be SIS Wire type

Instruction Bulletins

Reference 80043–055 For Handling, Installation, Anchoring, Inspection And Maintenance Information

Product Accessories/Options

24VDC Trip Unit Power Display

Customer TAG

Specials: MCC Splice on Left

DUAL DIMENSIONS: INCHES
MILLIMETERS

JOB NAME:	AQUA NEW YORK	EQUIPMENT DESIGNATION:	MSB–1
JOB LOCATION:	LEVITTOWN NY	EQUIPMENT TYPE:	QED SWITCHBOARD
DRAWN BY:	TELLY HAYES	DRAWING TYPE:	GENERAL NOTES
ENGR:	MLP		
DATE:	OCTOBER 15, 2013		
DRAWING STATUS:	RECORD	DWG# F31909132–008–01	PG 1 OF 2 REV C

REV	DESCRIPTION	BY	DATE	–	----	--	--/--/--	–	----	--	--/--/--
–	----	--	--/--/--	–	----	--	--/--/--	–	----	--	--/--/--

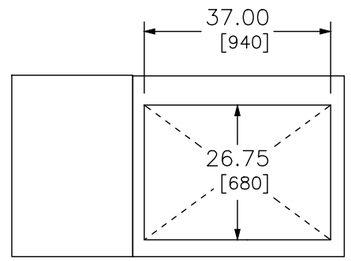

TOP VIEW – FRONT

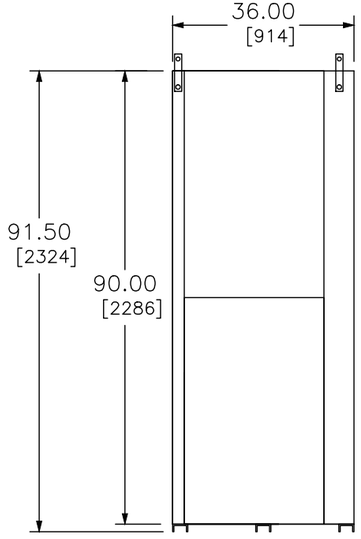

LEFT SIDE VIEW

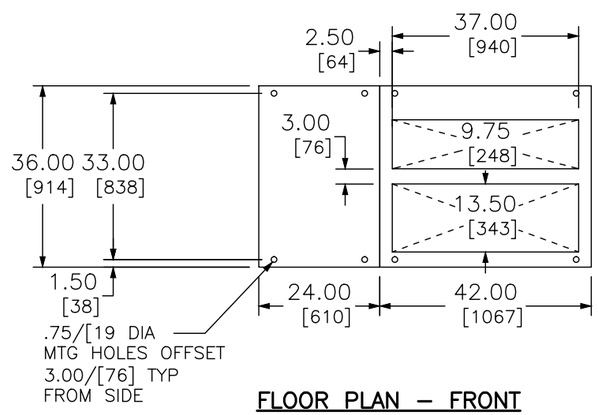

FLOOR PLAN – FRONT

DUAL DIMENSIONS: INCHES / MILLIMETERS

JOB NAME:	AQUA NEW YORK	EQUIPMENT DESIGNATION:	MSB–1
JOB LOCATION:	LEVITTOWN NY	EQUIPMENT TYPE:	QED SWITCHBOARD
DRAWN BY:	TELLY HAYES	DRAWING TYPE:	SIDE, TOP VIEW & FLOOR PLAN
ENGR:	MLP		
DATE:	OCTOBER 15, 2013		
DRAWING STATUS:	RECORD	DWG# F31909132–008–01	PG 2 OF 2 REV –

REV	DESCRIPTION	BY	DATE	–	----	--	--/--/--	–	----	--	--/--/--
A	RELEASE TO MANUFACTURING	TO	11/04/2013	–	----	--	--/--/--	–	----	--	--/--/--

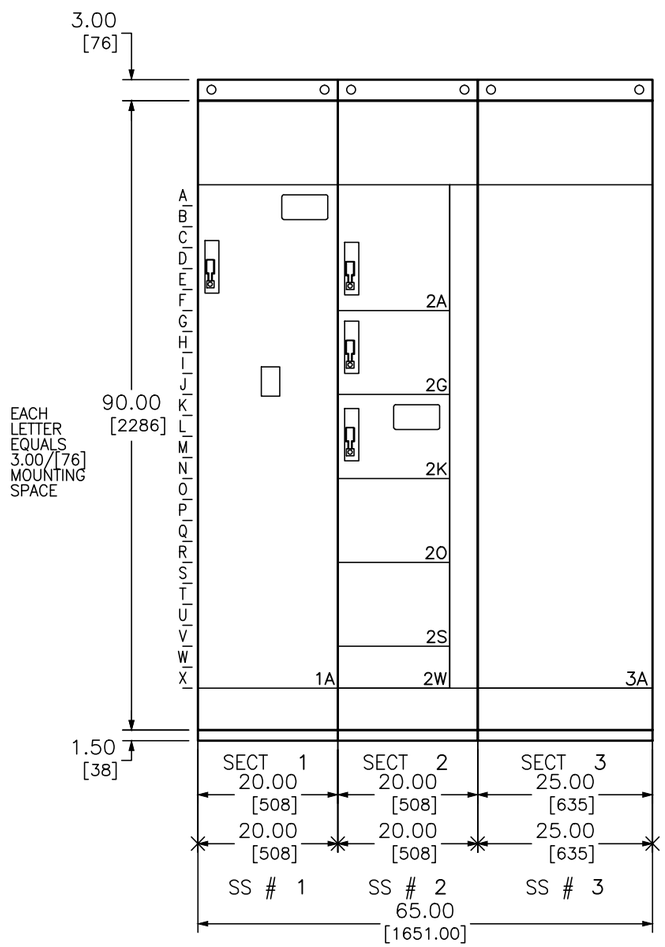

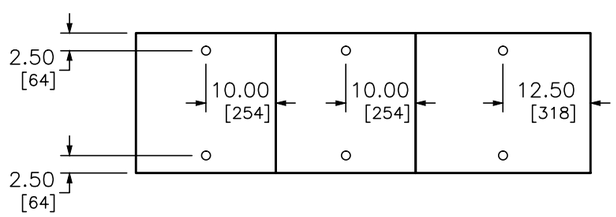

ANCHOR DETAIL

DUAL DIMENSIONS: INCHES
MILLIMETERS

JOB NAME:	AQUA NEW YORK	EQUIPMENT DESIGNATION:	MCC-LPGAC-C
JOB LOCATION:	BOHEMIA NY	EQUIPMENT TYPE:	MODEL 6 MOTOR CONTROL CENTER
DRAWN BY:	TRAVIS OLIVER	DRAWING TYPE:	ELEVATION
ENGR:	ROY WILLIAMS		
DATE:	NOVEMBER 04, 2013		
DRAWING STATUS:	RECORD	DWG# F31909132-003-01	PG 1 OF 3 REV A

REV	DESCRIPTION	BY	DATE	–	----	--	--/--/--	–	----	--	--/--/--
–	----	--	--/--/--	–	----	--	--/--/--	–	----	--	--/--/--

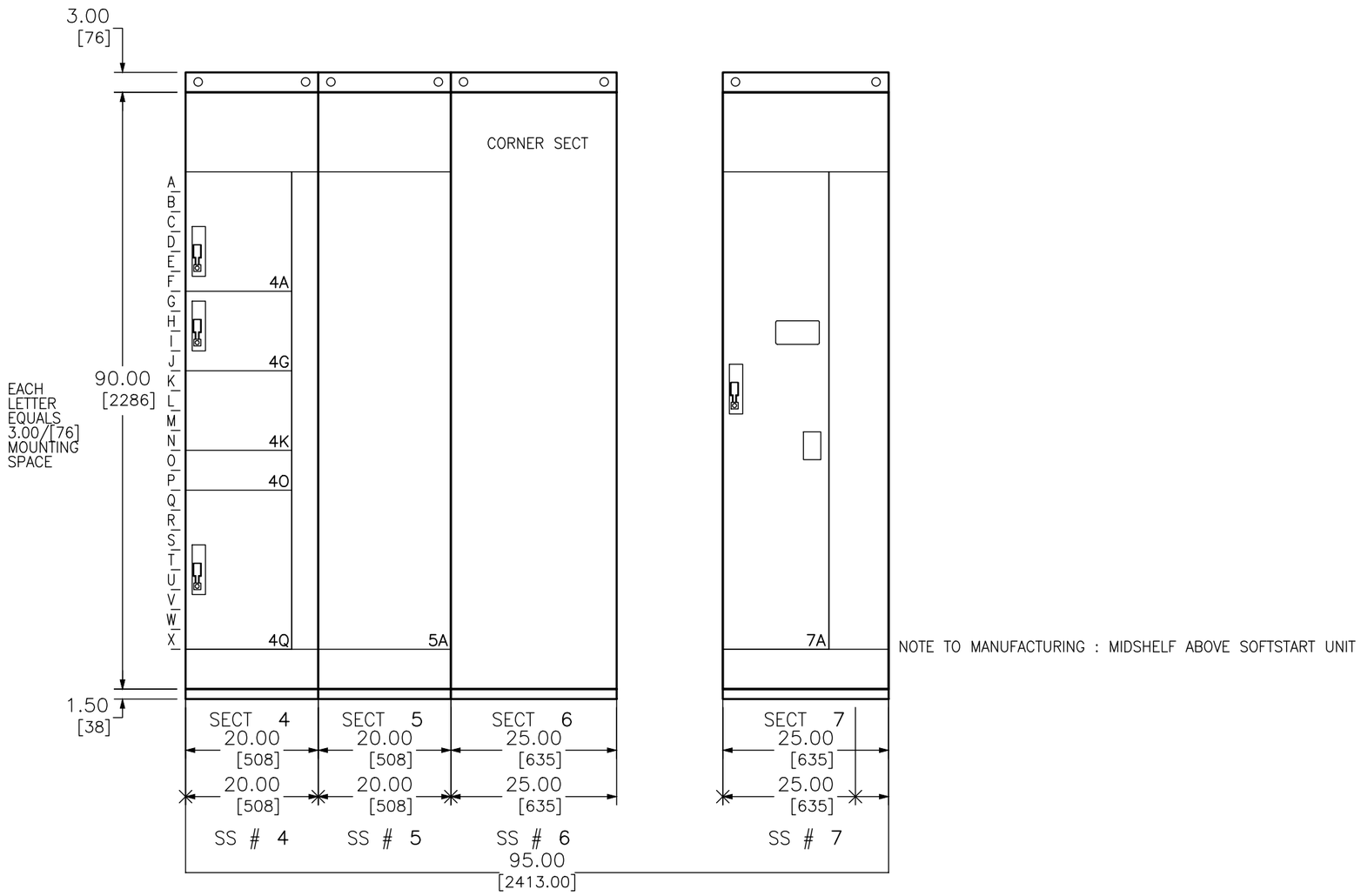

NOTE TO MANUFACTURING : MIDSHELF ABOVE SOFTSTART UNIT

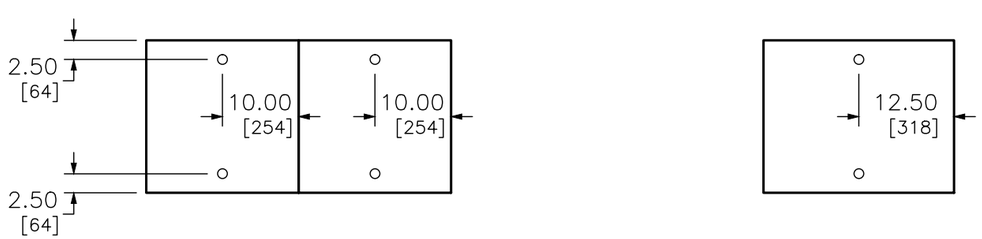

ANCHOR DETAIL

DUAL DIMENSIONS: INCHES / MILLIMETERS

JOB NAME:	AQUA NEW YORK	EQUIPMENT DESIGNATION:	MCC–LPGAC–N
JOB LOCATION:	BOHEMIA NY	EQUIPMENT TYPE:	MODEL 6 MOTOR CONTROL CENTER
DRAWN BY:	CAD	DRAWING TYPE:	ELEVATION
ENGR:			
DATE:	October 22 2013		
DRAWING STATUS:	RECORD	DWG# F31909132–005–01	PG 1 OF 3 REV –

REV	DESCRIPTION	BY	DATE	–	----	--	--/--/--
–	----	--	--/--/--	–	----	--	--/--/--

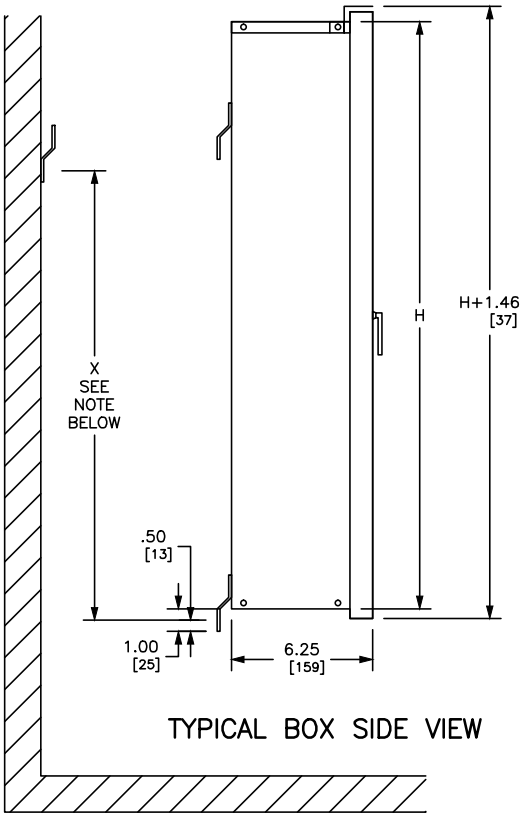

TYPICAL BOX SIDE VIEW

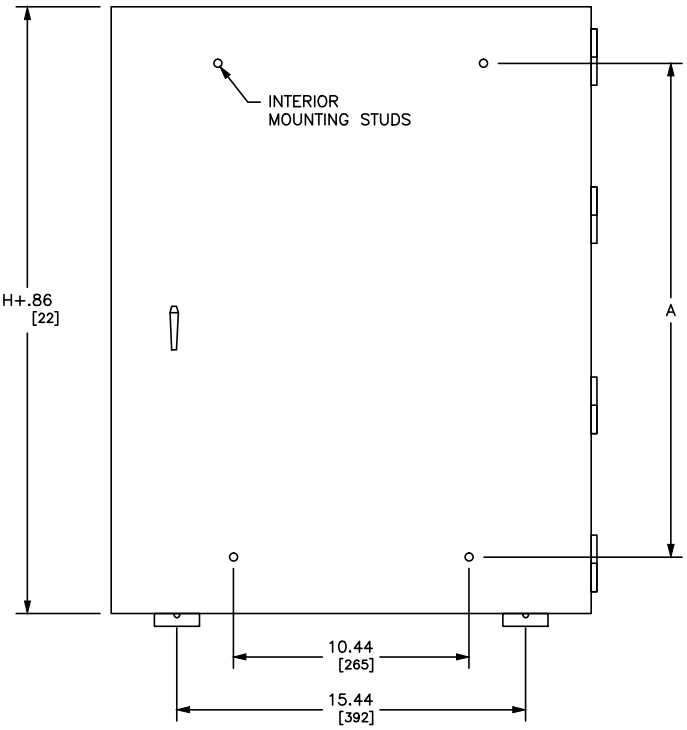

TYPICAL FRONT VIEW

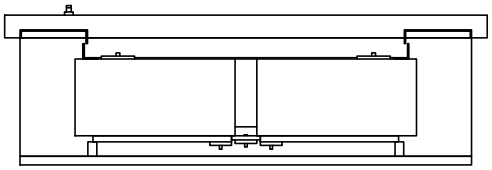

TYPICAL MOUNTING OF QO,QOB BREAKERS

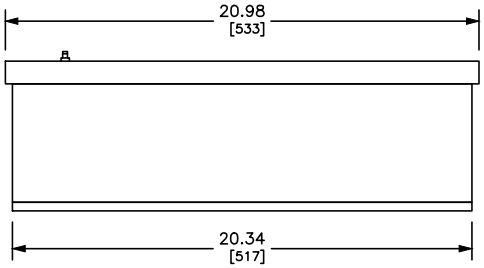

TYPICAL ENDWALL

DUAL DIMENSIONS: INCHES / MILLIMETERS

NOTE: FOR "X" DIMENSION, SUBTRACT 6.60/[168] FROM THE BOX HEIGHT.

REFER TO DP CATALOG CLASS 1640 FOR ADDTIONAL INFORMATION

NQ PANELBOARDS MEET THE APPLICABLE REQUIREMENTS OF UL AND CSA.

BOX: GRAY BAKED ENAMEL FINISH ELECTRODEPOSITED OVER CLEANED PHOSPHATIZED STEEL. INCLUDES HINGED COVER. MOUNTS TO WALL WITH MOUNTING BRACKETS.

LOCK: CHROME-PLATED HANDLE LOCK. NSR 251 KEY. NOT PROVISIONS FOR PADLOCK.

BOX HEIGHT		MOUNTING INTERIOR HEIGHT	
H		A	
IN	MM	IN	MM
26.00	660	21.00	533
32.00	813	27.00	686
38.00	965	33.00	838
44.00	1118	39.00	991
50.00	1270	45.00	1143
56.00	1422	51.00	1295
62.00	1575	57.00	1448
68.00	1727	63.00	1600
74.00	1880	69.00	1753
80.00	2032	75.00	1905
86.00	2184	81.00	2057

JOB NAME:	AQUA NEW YORK	EQUIPMENT DESIGNATION:	LP-MPLDP-2
JOB LOCATION:	LEVITTOWN NY	EQUIPMENT TYPE:	NQ (Circuit Breaker Type)
DRAWN BY:	CAD	DRAWING TYPE:	PAD DRAWING
ENGR:			
DATE:	October 17 2013		
DRAWING STATUS:	APPROVAL	DWG# A31909132-711-01	PG 1 OF 1 REV –

UNAUTHORIZED ALTERATION OR ADDITION TO THIS PLAN IS A VIOLATION OF SECTION 7209 OF THE NEW YORK STATE EDUCATION LAW, UNLESS THE PERSON IS ACTING UNDER THE DIRECTION OF A LICENSED PROFESSIONAL ENGINEER. ANY PLAN ALTERATIONS BY ANOTHER ENGINEER MUST BE MARKED AS SUCH, INCLUDING THE SIGNATURE AND SEAL OF THE ALTERING ENGINEER.

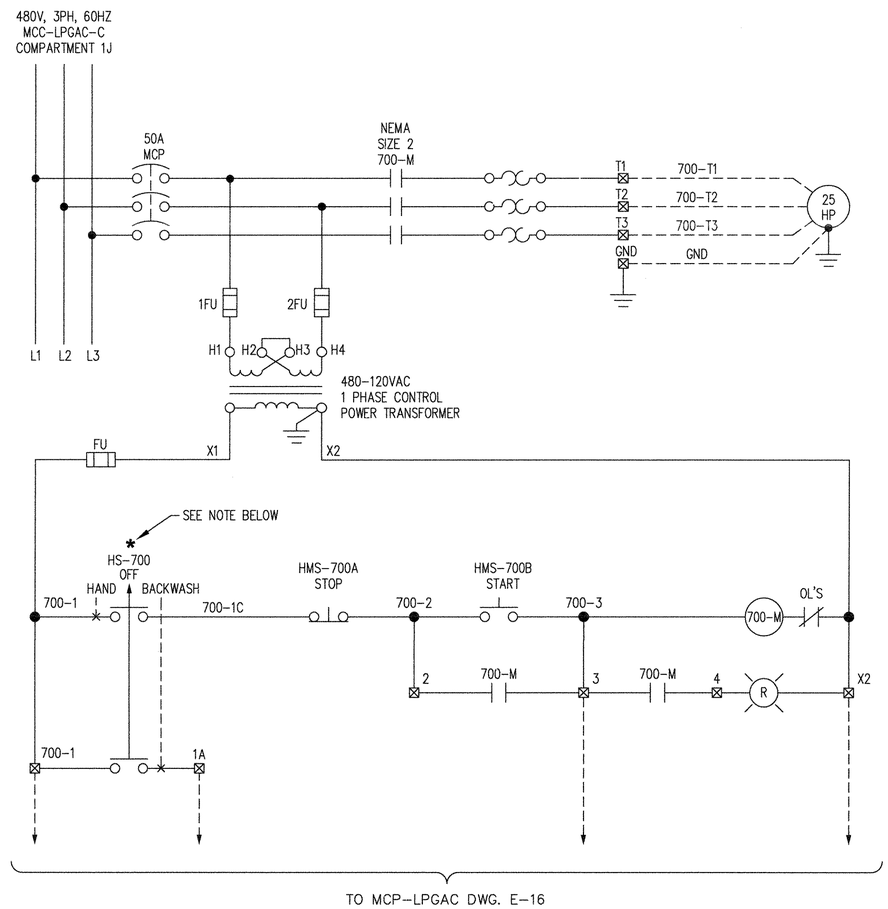

BACKWASH PUMP P700

NOTE: * HS-700 SHALL BE MOMENTARY IN THE "BACKWASH" POSITION AND MAINTAINED IN THE "HAND" AND "OFF" POSITIONS

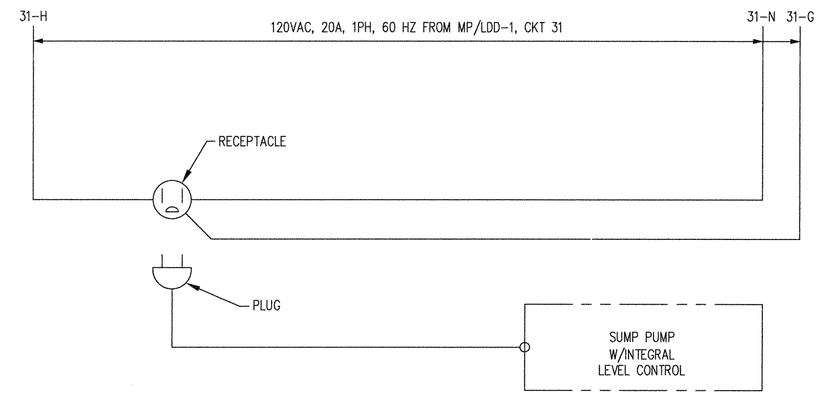

SUMP PUMP P702

LEGEND:

- - - - - FIELD WIRING
- ⊠ STARTER TERMINAL BLOCK
- □ MCP-LPGAC TERMINAL BLOCK
- ○ TJB-LPGAC TERMINAL BLOCK

NASSAU COUNTY DEPARTMENT OF HEALTH
DIVISION OF ENVIRONMENTAL HEALTH
These plans are hereby approved
SHEET 46 OF 69
See first sheet hereof for date and signature

REFERENCE DRAWING:

E-3 SINGLE LINE DIAGRAM
E-11 PANEL RISER DIAGRAMS
E-16 MCP-LPGAC ELEMENTARY DIAGRAMS SHT. 1

CAUTION: IF SHEET IS LESS THAN 34"x22" USE GRAPHIC SCALE

SYM	DESCRIPTION	DATE	APPR
.	NASSAU COUNTY DEPT. OF HEALTH SUBMITTAL	9/9/2011	.

NAVFAC

STATE OF NEW YORK
ROGER A. STRAUSS
088075-1
LICENSED PROFESSIONAL ENGINEER

DES GESSLER | DR HORTON
REVIEWED BY GESSLER
PM/DM DDB
CHIEF ENG/ARCH GESSLER

DEPARTMENT OF THE NAVY
NAVAL FACILITIES ENGINEERING COMMAND
NAVAL FACILITIES ENGINEERING COMMAND ~ MID-ATLANTIC
NORTHEAST IPT
NAVAL STATION - NORFOLK, VIRGINIA
AQUA NY
NASSAU COUNTY, NEW YORK
MODIFICATIONS TO WATER TREATMENT FACILITY

ELECTRICAL - ELEMENTARY DIAGRAMS - SHT. 1

CODE ID. NO. 80091 | SIZE D
SCALE:
MAXIMO NO. N62470-08-D-1001
JOB ORDER NO. WE-25
SPEC. NO.
CONSTR. CONTR. NO. 112G02223
NAVFAC DRAWING NO.
SHEET OF --

E-4

NOV 07 2012

46

UNAUTHORIZED ALTERATION OR ADDITION TO THIS PLAN IS A VIOLATION OF SECTION 7209 OF THE NEW YORK STATE EDUCATION LAW, UNLESS THE PERSON IS ACTING UNDER THE DIRECTION OF A LICENSED PROFESSIONAL ENGINEER. ANY PLAN ALTERATIONS BY ANOTHER ENGINEER MUST BE MARKED AS SUCH, INCLUDING THE SIGNATURE AND SEAL OF THE ALTERING ENGINEER.

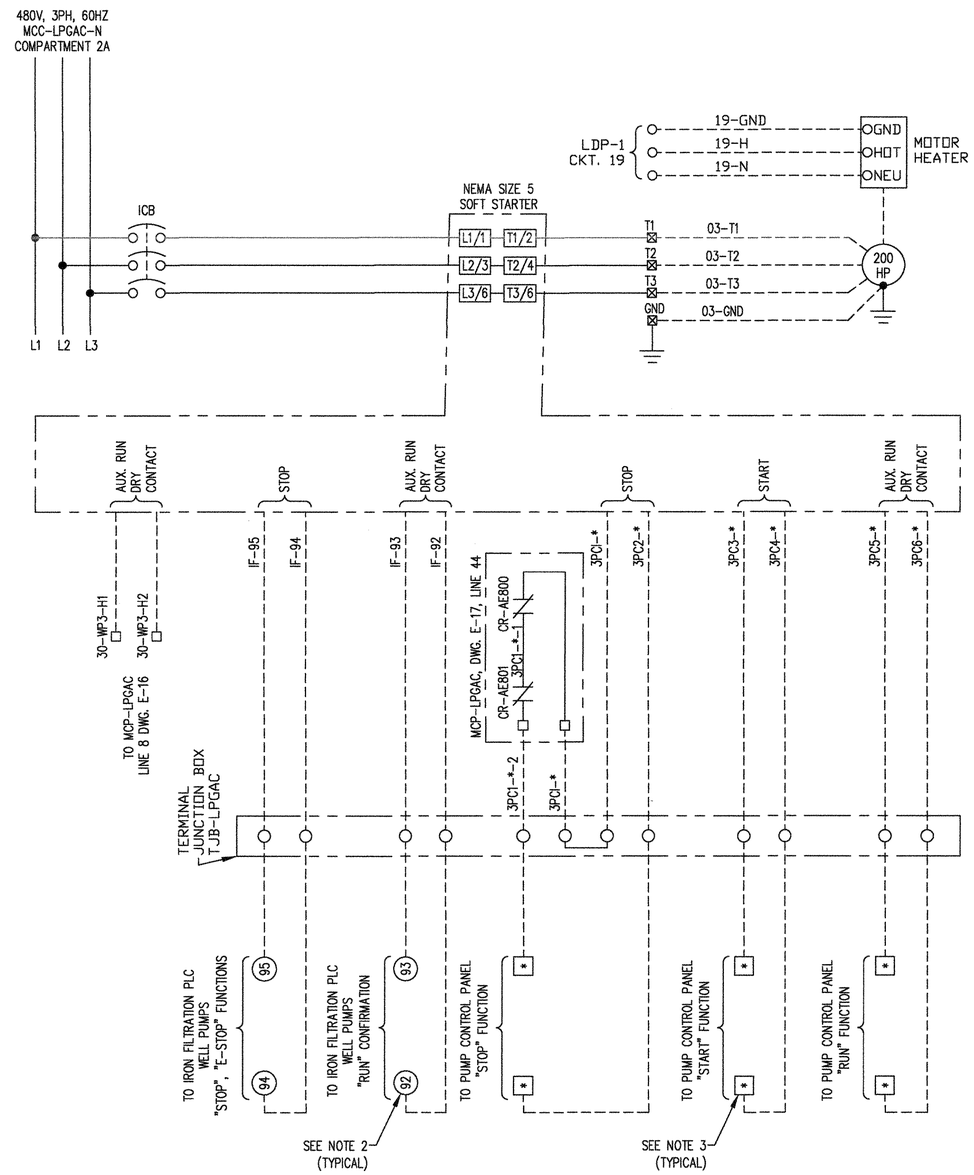

WELL PUMP 3 WP-3

* TERMINAL BLOCK NUMBER
TO BE FIELD DETERMINED

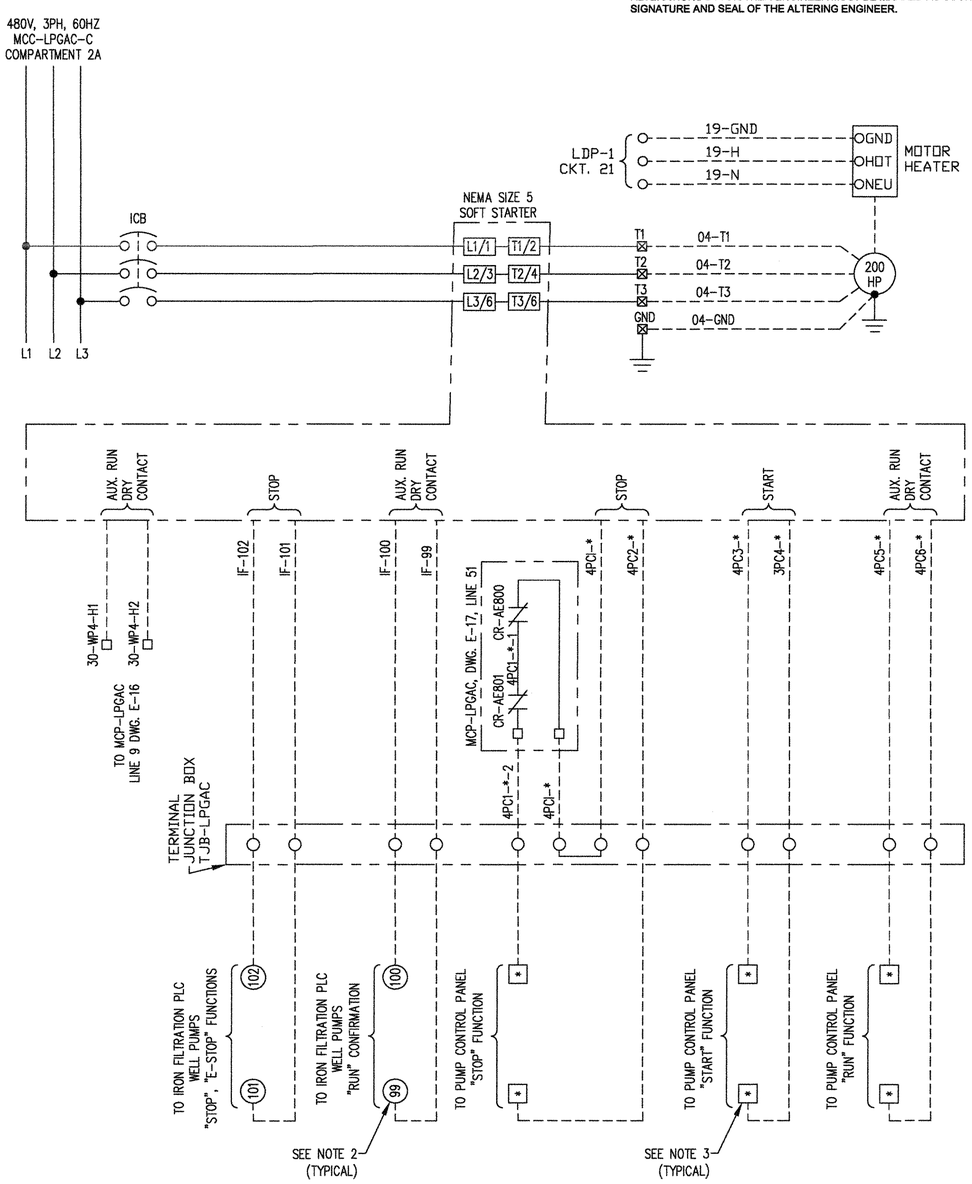

WELL PUMP 4 WP-4

* TERMINAL BLOCK NUMBER
TO BE FIELD DETERMINED

NOTES:

1. FOR LEGEND AND NOTES, SEE DWG. E-4.
2. TERMINAL BLOCKS LOCATED IN THE IRON FILTRATION PLC. VERIFY TERMINAL BLOCK FOR NUMBERING AND FUNCTION.
3. TERMINAL BLOCKS LOCATED IN THE PUMP CONTROL PANEL, VERIFY TERMINAL BLOCK FOR NUMBERING AND FUNCTION.

REFERENCE DRAWING:

E-3 SINGLE LINE DIAGRAM
E-16 MCP-LPGAC ELEMENTARY DIAGRAM - SHT. 1
E-17 MCP-LPGAC ELEMENTARY DIAGRAM - SHT. 2

NASSAU COUNTY DEPARTMENT OF HEALTH
DIVISION OF ENVIRONMENTAL HEALTH
These plans are hereby approved
SHEET 47 OF 69
See first sheet hereof for date and signature

CAUTION: IF SHEET IS LESS THAN 34"x22" USE GRAPHIC SCALE

STM	DESCRIPTION	DATE	APPR
1	APPROVAL SUBMISSION, REV 1	8/01/12	-

NAVFAC

STATE OF NEW YORK
ROGER A. STRAUSS
088075-1
LICENSED PROFESSIONAL ENGINEER

DES GESSLER | DR HORTON
REVIEWED BY GESSLER
PM/DM
CHIEF ENG/ARCH GESSLER

DEPARTMENT OF THE NAVY
NAVAL FACILITIES ENGINEERING COMMAND
NORTHEAST PT.
AQUA NY

NAVAL FACILITIES ENGINEERING COMMAND ~ MID-ATLANTIC
NAVAL STATION - NORFOLK, VIRGINIA
NASSAU COUNTY, NEW YORK

MODIFICATIONS TO WATER TREATMENT FACILITY

ELECTRICAL - ELEMENTARY DIAGRAMS - SHT. 2

CODE ID. NO. 80091 | SIZE D
SCALE:
MAXIMO NO. N62470-08-D-1001
JOB ORDER NO. WE-25
SPEC. NO.
CONSTR. CONTR. NO. 112G02223
NAVFAC DRAWING NO.
SHEET OF --

E-5

MAY 07 2012

UNAUTHORIZED ALTERATION OR ADDITION TO THIS PLAN IS A VIOLATION OF SECTION 7209 OF THE NEW YORK STATE EDUCATION LAW, UNLESS THE PERSON IS ACTING UNDER THE DIRECTION OF A LICENSED PROFESSIONAL ENGINEER. ANY PLAN ALTERATIONS BY ANOTHER ENGINEER MUST BE MARKED AS SUCH, INCLUDING THE SIGNATURE AND SEAL OF THE ALTERING ENGINEER.

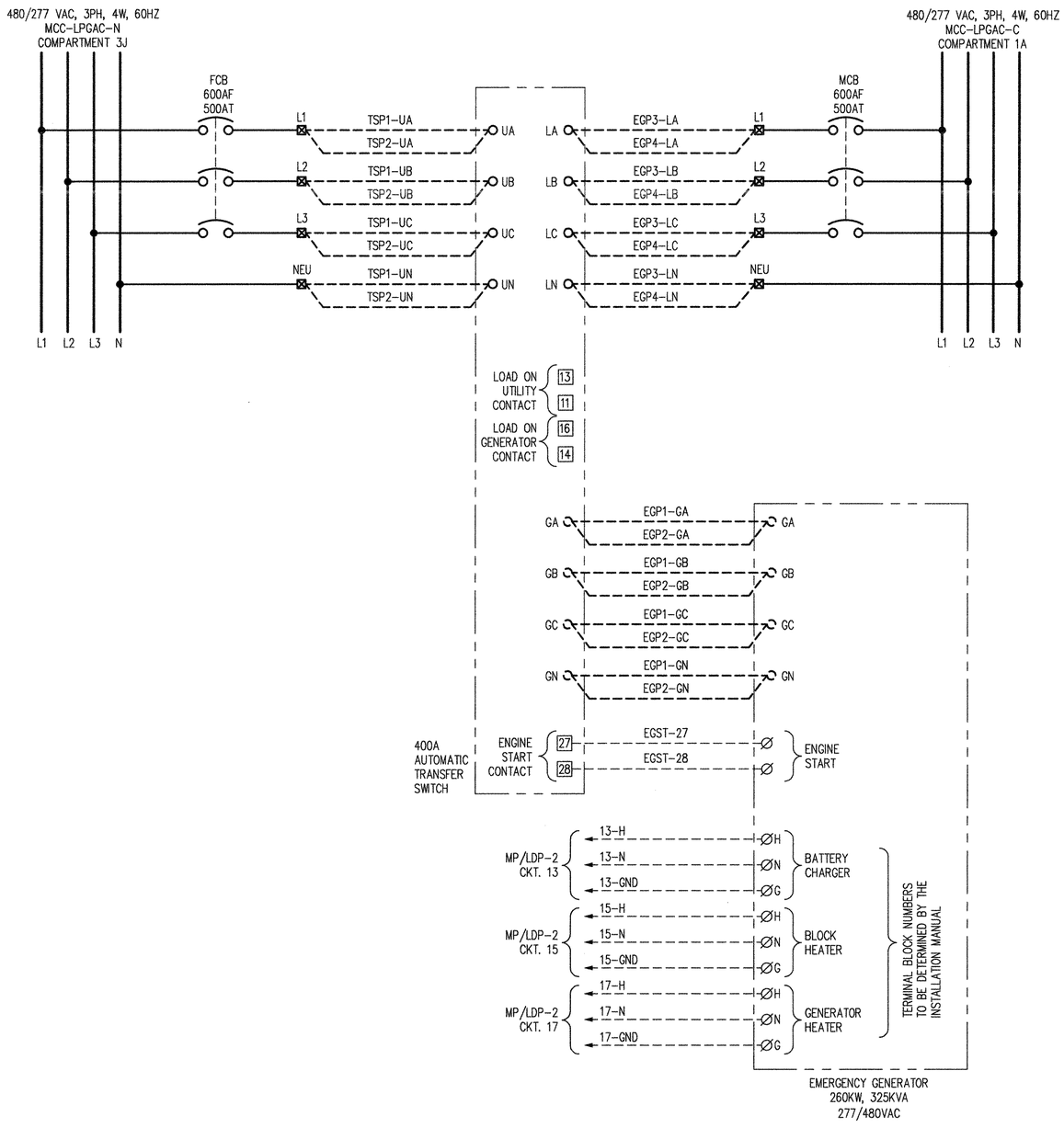

EMERGENCY GENERATOR & AUTOMATIC TRANSFER SWITCH

CAUTION: VERIFY ALL TERMINATIONS AND COORDINATE FUNCTIONS WITH THE "INSTALLATION MANUAL" SUPPLIED WITH THE TRANSFER SWITCH AND EMERGENCY GENERATOR. ADDITIONALLY, VERIFY THE "CORRECTNESS" OF THE INSTALLATION WITH THE EQUIPMENT TECHNICIAN WHEN ON SITE.

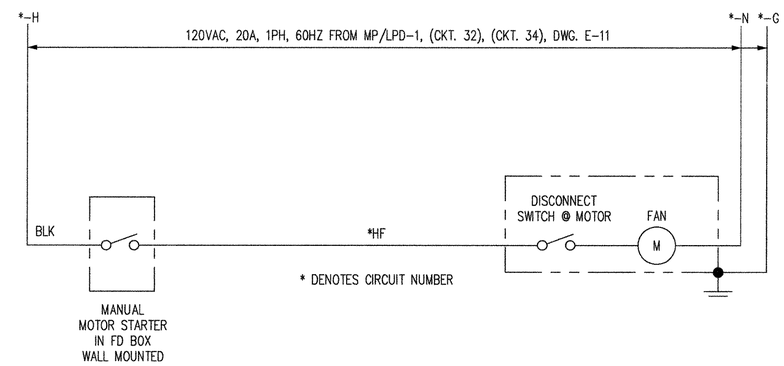

HYPOCHLORITE STORAGE ROOM 102 FAN (CKT. 32)

NASSAU COUNTY DEPARTMENT OF HEALTH
DIVISION OF ENVIRONMENTAL HEALTH
These plans are hereby approved
SHEET 48 OF 69
See first sheet hereof for date and signature

NOTE:

1. FOR LEGEND AND NOTES, SEE DWG. E-4.

REFERENCE DRAWINGS:

E-3 SINGLE LINE DIAGRAM
E-4 ELEMENTARY DIAGRAM - SHT. 1
E-11 PANEL RISER DIAGRAMS

STATE OF NEW YORK
ROGER A. STRAUSS
088075-1
LICENSED PROFESSIONAL ENGINEER
3.30.12

CAUTION: IF SHEET IS LESS THAN 34"x22" USE GRAPHIC SCALE

SYM	DESCRIPTION	DATE	APPR
1	APPROVAL SUBMISSION	3/30/12	-

NAVFAC

DEPARTMENT OF THE NAVY
NAVAL FACILITIES ENGINEERING COMMAND
NAVAL FACILITIES ENGINEERING COMMAND ~ MID-ATLANTIC
NORTHEAST IPT
NAVAL STATION - NORFOLK, VIRGINIA
AQUA NY
NASSAU COUNTY, NEW YORK
MODIFICATIONS TO WATER TREATMENT FACILITY
ELECTRICAL - ELEMENTARY DIAGRAM - SHT. 3

DES | DR
REVIEWED BY
PM/DM
CHIEF ENG/ARCH

CODE ID. NO. 80091 | SIZE D
SCALE:
MAXIMO NO. N62470-08-D-1001
JOB ORDER NO. WE-25
SPEC. NO.
CONSTR. CONTR. NO. 112G02223
NAVFAC DRAWING NO.
SHEET OF --

E-6

NOV 07 2012

48

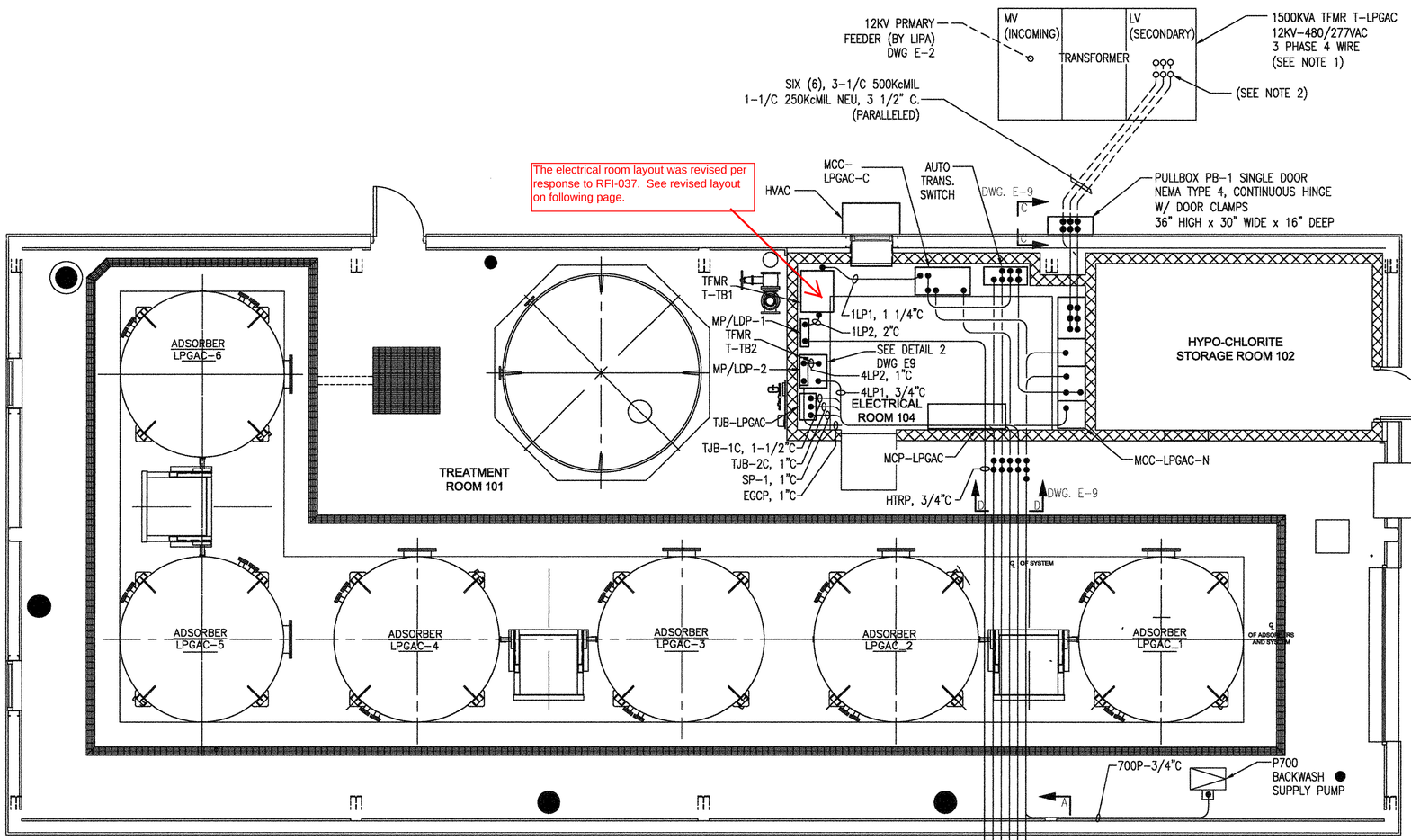

PLAN - LPGAC TREATMENT BUILDING

NOTE: ALL POWER AND CONTROL CONDUIT ARE NOT SHOWN ON THIS PLAN. WORK THIS DRAWING WITH DRAWINGS E-8, E-9 AND E-10 FOR A COMPLETE UNDERSTANDING

UNAUTHORIZED ALTERATION OR ADDITION TO THIS PLAN IS A VIOLATION OF SECTION 7209 OF THE NEW YORK STATE EDUCATION LAW, UNLESS THE PERSON IS ACTING UNDER THE DIRECTION OF A LICENSED PROFESSIONAL ENGINEER. ANY PLAN ALTERATIONS BY ANOTHER ENGINEER MUST BE MARKED AS SUCH, INCLUDING THE SIGNATURE AND SEAL OF THE ALTERING ENGINEER.

NASSAU COUNTY DEPARTMENT OF HEALTH
DIVISION OF ENVIRONMENTAL HEALTH
These plans are hereby approved
SHEET 49 OF 69
See first sheet hereof for date and signature

NOTES:

1. THE PROJECTS 3 PHASE CONNECTED LOAD IS 765KVA. THE SIZE OF THE PRIMARY FEEDER, PROTECTION AND TRANSFORMER IS TO THE DISCRETION OF LONG ISLAND POWER AUTHORITY (LIPA). HOWEVER, THE 1500KV TRANSFORMER RATING IS ANTICIPATING FUTURE LOADS. THE RATING PROVIDED IS THE MAXIMUM.
2. THE 1500KVA TRANSFORMER IS SUPPLIED BY THE LONG ISLAND POWER AUTHORITY (LIPA). THE CONDUIT STUB-UP TEMPLATE LOCATION AND ARRANGEMENT MUST BE COORDINATED WITH THE LIPA SUPPLIED TRANSFORMER.
3. STUB-UP CONDUIT 6" ABOVE GRADE AND CAP.
4. FOR LEGEND, NOTES & DETAILS; SEE DRAWING E-1.
5. EXPOSED CONDUIT IN THE ELECTRICAL ROOM SHALL BE RUN AT AN ELEVATION OF 9'-6" ABOVE FLOOR.
6. EXPOSED CONDUIT IN THE TREATMENT BUILDING SHALL BE RUN AT AN ELEVATION OF 22'-6" ABOVE FLOOR.

REFERENCE DRAWINGS:

E-1 LEGEND & GENERAL NOTES
E-2 SINGLE LINE DIAGRAM - SHT. 1
E-3 SINGLE LINE DIAGRAM - SHT. 2
E-8 SITE CONDUIT PLAN
E-9 CONDUIT DETAILS & SECTIONS
E-10 CONDUIT TEMPLATES

CAUTION: IF SHEET IS LESS THAN 34"x22" USE GRAPHIC SCALE

1	APPROVAL SUBMISSION, REV 1	6/7/12	
		DATE	APPR

NAVFAC

STATE OF NEW YORK · ROCCO A. STIRPE · 089075-1 · LICENSED PROFESSIONAL ENGINEER

DES GESSLER | DR HORTON
REVIEWED BY GESSLER
PM/DM
CHIEF ENG/ARCH GESSLER

DEPARTMENT OF THE NAVY
NAVAL FACILITIES ENGINEERING COMMAND ~ MID-ATLANTIC
NAVAL STATION - NORFOLK, VIRGINIA
NORTHEAST PT
AQUA NY
NASSAU COUNTY, NEW YORK
MODIFICATIONS TO WATER TREATMENT FACILITY
ELECTRICAL - POWER & CONTROL CONDUIT PLAN

CODE ID. NO. 80091 | SIZE D
SCALE:
MAXIMO NO. N62470-08-D-1001
JOB ORDER NO. WE-25
SPEC. NO.
CONSTR. CONTR. NO. 112G02223
NAVFAC DRAWING NO.
SHEET OF --
E-7

NOV 07 2012

49

REVISED ELECTRICAL ROOM LAYOUT DRAWING

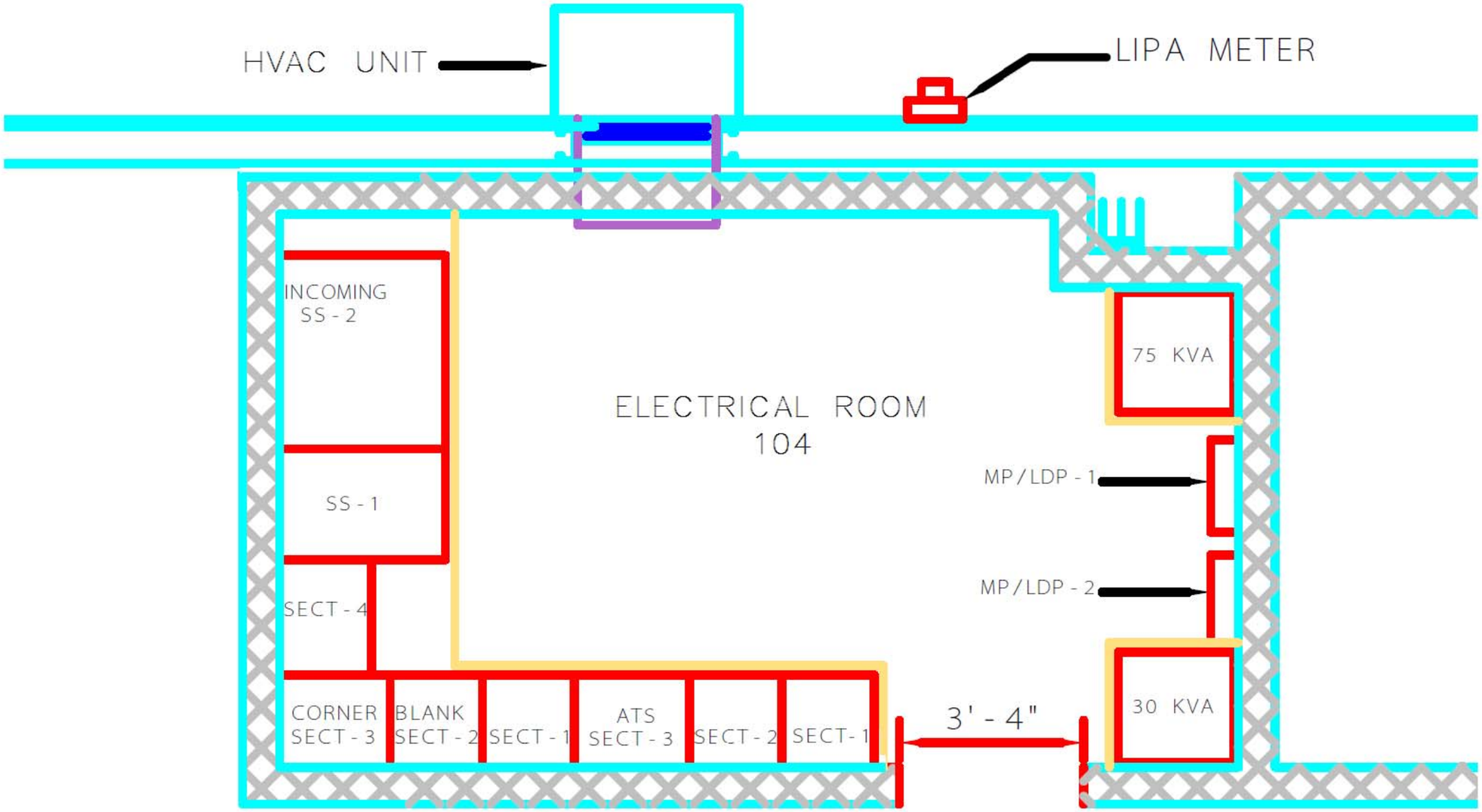

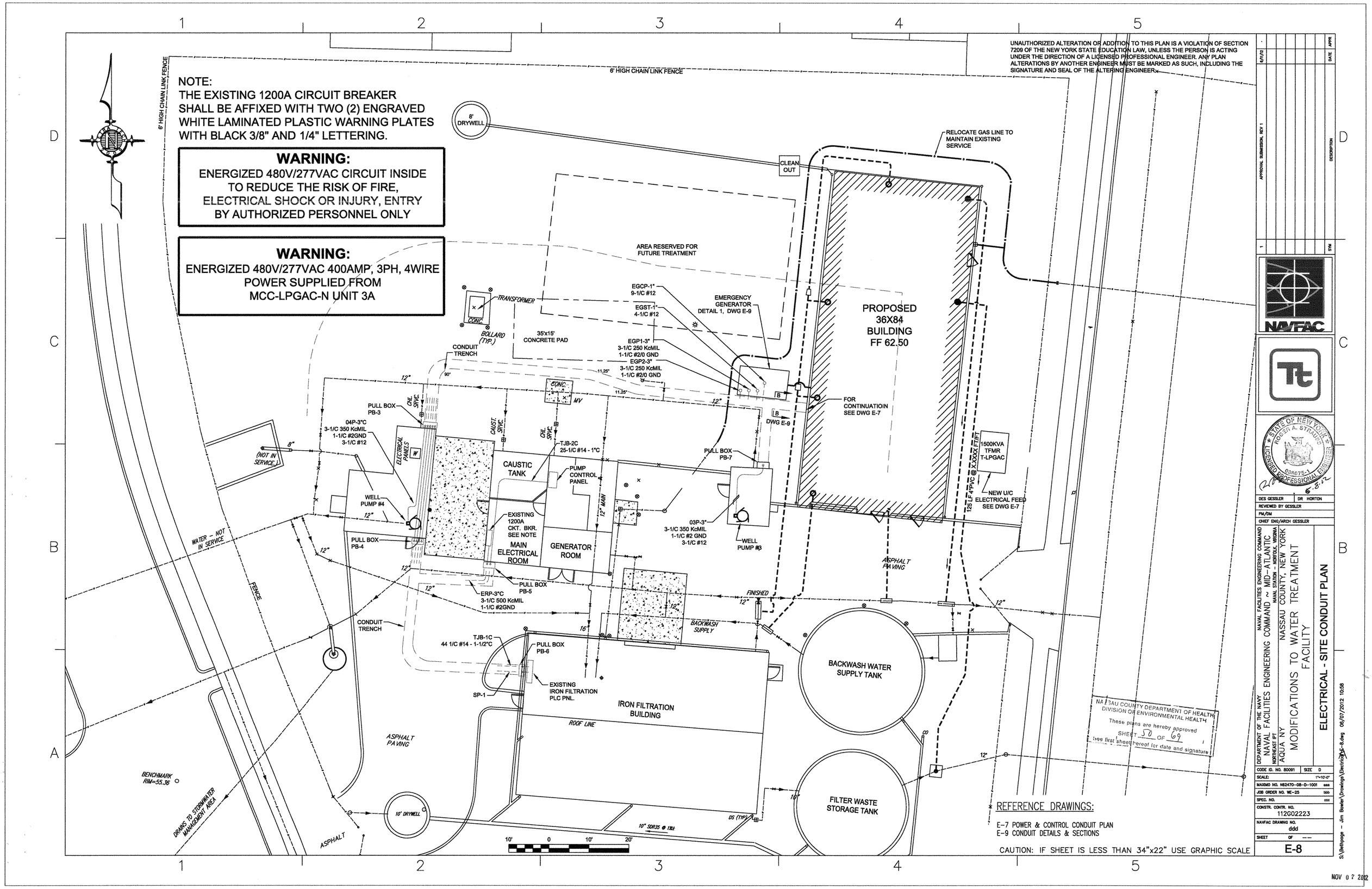

NOTE:
THE EXISTING 1200A CIRCUIT BREAKER SHALL BE AFFIXED WITH TWO (2) ENGRAVED WHITE LAMINATED PLASTIC WARNING PLATES WITH BLACK 3/8" AND 1/4" LETTERING.
WARNING:
ENERGIZED 480V/277VAC CIRCUIT INSIDE TO REDUCE THE RISK OF FIRE, ELECTRICAL SHOCK OR INJURY, ENTRY BY AUTHORIZED PERSONNEL ONLY
WARNING:
ENERGIZED 480V/277VAC 400AMP, 3PH, 4WIRE POWER SUPPLIED FROM MCC-LPGAC-N UNIT 3A
UNAUTHORIZED ALTERATION OR ADDITION TO THIS PLAN IS A VIOLATION OF SECTION 7209 OF THE NEW YORK STATE EDUCATION LAW, UNLESS THE PERSON IS ACTING UNDER THE DIRECTION OF A LICENSED PROFESSIONAL ENGINEER. ANY PLAN ALTERATIONS BY ANOTHER ENGINEER MUST BE MARKED AS SUCH, INCLUDING THE SIGNATURE AND SEAL OF THE ALTERING ENGINEER.
6' HIGH CHAIN LINK FENCE
8' DRYWELL
CLEAN OUT
RELOCATE GAS LINE TO MAINTAIN EXISTING SERVICE
AREA RESERVED FOR FUTURE TREATMENT
TRANSFORMER
CONC.
BOLLARD (TYP.)
35'x15' CONCRETE PAD
EGCP-1" 9-1/C #12
EGST-1" 4-1/C #12
EMERGENCY GENERATOR DETAIL 1, DWG E-9
EGP1-3" 3-1/C 250 KcMIL 1-1/C #2/0 GND
EGP2-3" 3-1/C 250 KcMIL 1-1/C #2/0 GND
PROPOSED 36X84 BUILDING FF 62.50
FOR CONTINUATIOIN SEE DWG E-7
DWG E-9
CONDUIT TRENCH
PULL BOX PB-3
04P-3"C 3-1/C 350 KcMIL 1-1/C #2GND 3-1/C #12
ELECTRICAL PANELS
CAUST. SRVC.
CHL. SRVC.
TJB-2C 25-1/C #14 - 1"C
CAUSTIC TANK
PUMP CONTROL PANEL
PULL BOX PB-7
1500KVA TFMR T-LPGAC
NEW U/C ELECTRICAL FEED SEE DWG E-7
125 LF 4"PVC @ X.XXXX FT/FT
(NOT IN SERVICE)
WELL PUMP #4
EXISTING 1200A CKT. BKR. SEE NOTE
MAIN ELECTRICAL ROOM
GENERATOR ROOM
12" MAIN
03P-3" 3-1/C 350 KcMIL 1-1/C #2 GND 3-1/C #12
WELL PUMP #3
WATER - NOT IN SERVICE
PULL BOX PB-4
PULL BOX PB-5
ERP-3"C 3-1/C 500 KcMIL 1-1/C #2GND
ASPHALT PAVING
FINISHED
BACKWASH SUPPLY
FENCE
CONDUIT TRENCH
TJB-1C 44 1/C #14 - 1-1/2"C
PULL BOX PB-6
SP-1
EXISTING IRON FILTRATION PLC PNL.
IRON FILTRATION BUILDING
ROOF LINE
BACKWASH WATER SUPPLY TANK
FILTER WASTE STORAGE TANK
ASPHALT PAVING
BENCHMARK RIM=55.36
DRAINS TO STORMWATER MANAGEMENT AREA
10' DRYWELL
ASPHALT
10" SDR35 @ 1%±
DS (TYP)
10' 0 10' 20'
NASSAU COUNTY DEPARTMENT OF HEALTH
DIVISION OF ENVIRONMENTAL HEALTH
These plans are hereby approved
SHEET 50 OF 69
See first sheet hereof for date and signature
REFERENCE DRAWINGS:
E-7 POWER & CONTROL CONDUIT PLAN
E-9 CONDUIT DETAILS & SECTIONS
CAUTION: IF SHEET IS LESS THAN 34"x22" USE GRAPHIC SCALE
NAVFAC
STATE OF NEW YORK
ROGER A. STRAUSS
LICENSED PROFESSIONAL ENGINEER
088075-1
6.8.12
DES GESSLER
DR HORTON
REVIEWED BY GESSLER
PM/DM
CHIEF ENG/ARCH GESSLER
DEPARTMENT OF THE NAVY
NAVAL FACILITIES ENGINEERING COMMAND
NAVAL FACILITIES ENGINEERING COMMAND ~ MID-ATLANTIC
NORTHEAST IPT
NAVAL STATION - NORFOLK, VIRGINIA
AQUA NY
NASSAU COUNTY, NEW YORK
MODIFICATIONS TO WATER TREATMENT FACILITY
ELECTRICAL - SITE CONDUIT PLAN
CODE ID. NO. 80091
SIZE D
SCALE: 1"=10'-0"
MAXIMO NO. N62470-08-D-1001 aaa
JOB ORDER NO. WE-25 bbb
SPEC. NO. ccc
CONSTR. CONTR. NO. 112G02223
NAVFAC DRAWING NO. ddd
SHEET OF --
E-8
S:\Bethpage - Jim Bowler\Drawings\Electrical\E-8.dwg 06/07/2012 10:58
NOV 07 2012

50

Attachment 1 to RFI-039. Shown here is the modified electric duct bank route, per approval of this RFI (dated 10/07/13).

Attachment No. 01
Electrical Duct Bank Rerouting

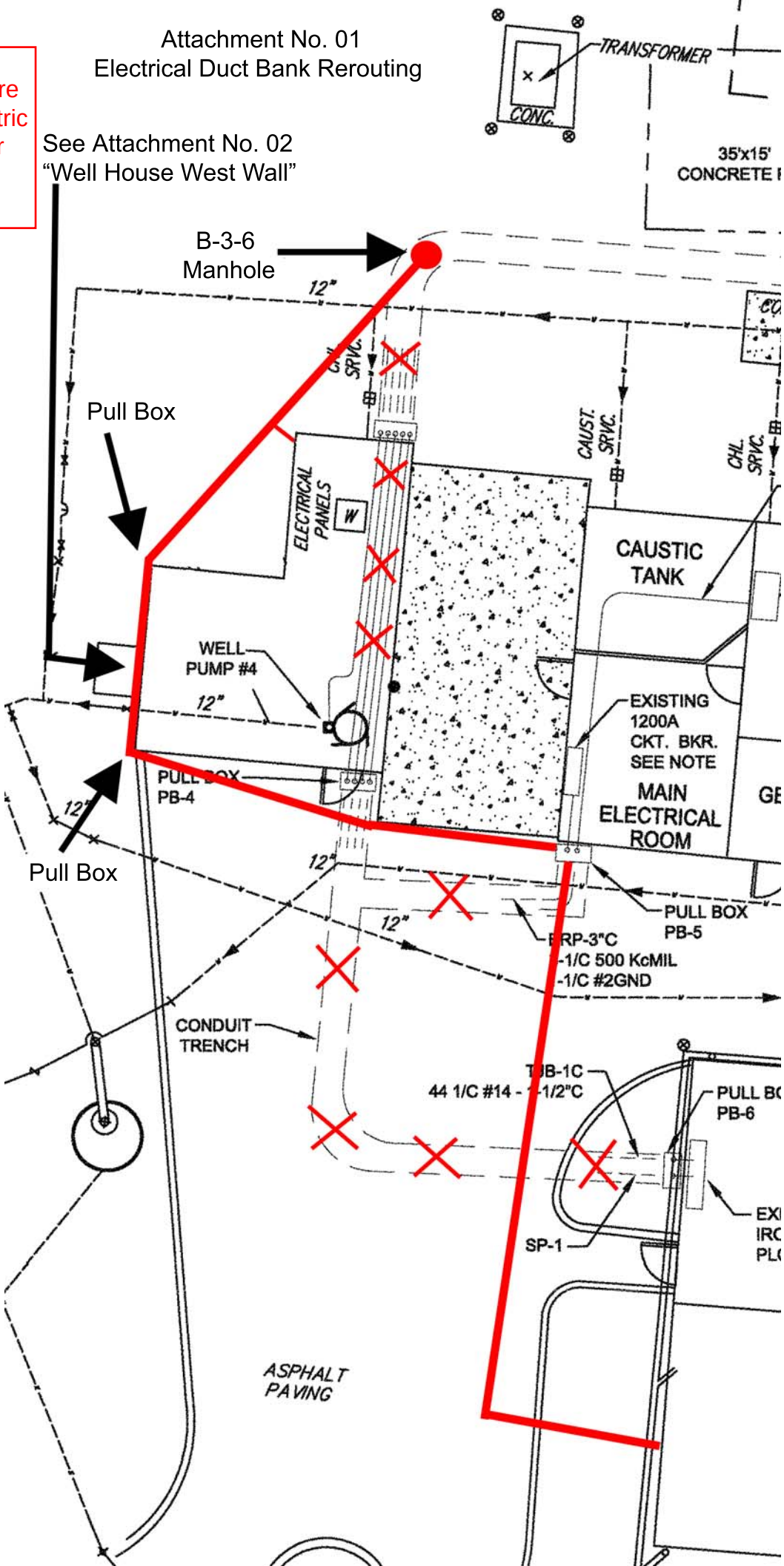

UNAUTHORIZED ALTERATION OR ADDITION TO THIS PLAN IS A VIOLATION OF SECTION 7209 OF THE NEW YORK STATE EDUCATION LAW, UNLESS THE PERSON IS ACTING UNDER THE DIRECTION OF A LICENSED PROFESSIONAL ENGINEER. ANY PLAN ALTERATIONS BY ANOTHER ENGINEER MUST BE MARKED AS SUCH, INCLUDING THE SIGNATURE AND SEAL OF THE ALTERING ENGINEER.

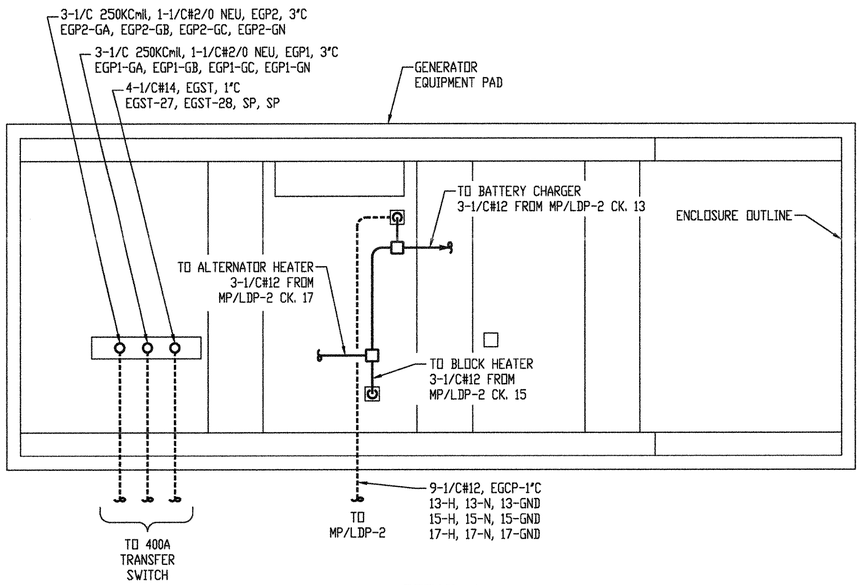

DETAIL 1
DRAWING E-8

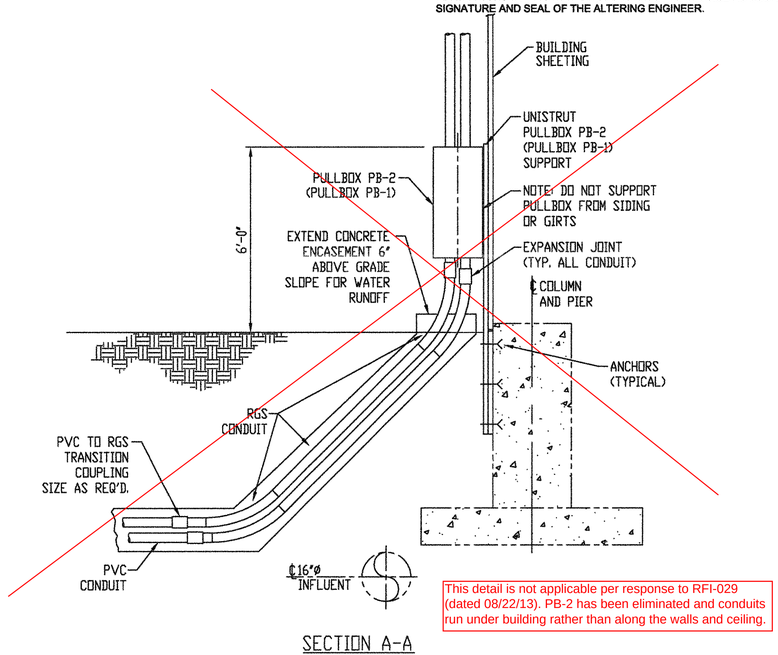

This detail is not applicable per response to RFI-029 (dated 08/22/13). PB-2 has been eliminated and conduits run under building rather than along the walls and ceiling.

SECTION A-A
DRAWING E-7

SECTION C-C
DRAWING E-7
THIS INSTALLATION SHALL BE SIMILAR TO SECTION A-A

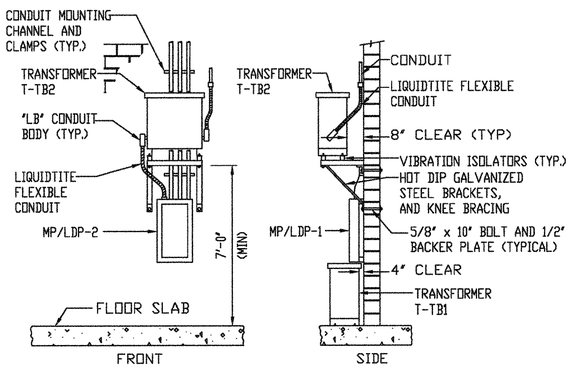

WALL/FLOOR TRANSFORMERS AND PANELBOARDS

DETAIL 2
DRAWING E-7

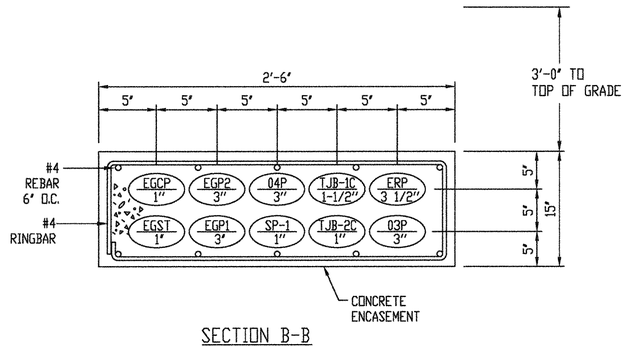

SECTION B-B
DRAWING E-8

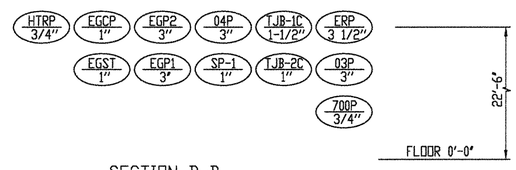

SECTION D-D
DRAWING E-7

NASSAU COUNTY DEPARTMENT OF HEALTH
DIVISION OF ENVIRONMENTAL HEALTH
These plans are hereby approved
SHEET 51 OF 69
See first sheet hereof for date and signature

REFERENCE DRAWINGS:

E-7 TREATMENT BUILDING CONDUIT PLAN
E-8 SITE CONDUIT PLAN

CAUTION: IF SHEET IS LESS THAN 34"x22" USE GRAPHIC SCALE

1	APPROVAL SUBMISSION, REV 1	8/1/12		
	DESCRIPTION	DATE	APPR.	

NAVFAC

DES GESSLER | DR HORTON
REVIEWED BY GESSLER
PM/DM
CHIEF ENG/ARCH GESSLER

DEPARTMENT OF THE NAVY
NAVAL FACILITIES ENGINEERING COMMAND
NORTHEAST IPT
AQUA NY
NAVAL FACILITIES ENGINEERING COMMAND ~ MID-ATLANTIC
NAVAL STATION – NORFOLK, VIRGINIA
NASSAU COUNTY, NEW YORK
MODIFICATIONS TO WATER TREATMENT FACILITY

ELECTRICAL - CONDUIT DETAILS & SECTIONS

CODE ID. NO. 80091 | SIZE D
SCALE:
MAXIMO NO. N62470-08-D-1001
JOB ORDER NO. WE-25
SPEC. NO.
CONSTR. CONTR. NO. 112G02223
NAVFAC DRAWING NO. ....
SHEET ..... OF ——

E-9

NOV 07 2012

51

TEMPLATE T1 (TOP VIEW)
DRAWING E7

MCC-LPGAC-N — FRONT

UNIT 1
- 3-1/C 500KCmil, 1-1/C 250KCmil NEU, NP5, 3 1/2"C.
  NP5-L1, NP5-L2, NP5-L3, NP5-NEU
- 3-1/C 500KCmil, 1-1/C 250KCmil NEU, NP6, 3 1/2"C.
  NP6-L1, NP6-L2, NP6-L3, NP6-NEU
- 3-1/C 500KCmil, 1-1/C 250KCmil NEU, NP2, 3 1/2"C.
  NP2-L1, NP2-L2, NP2-L3, NP2-NEU
- 3-1/C 500KCmil, 1-1/C 250KCmil NEU, NP4, 3 1/2"C.
  NP4-L1, NP4-L2, NP4-L3, NP4-NEU
- 3-1/C 500KCmil, 1-1/C 250KCmil NEU, NP1, 3 1/2"C.
  NP1-L1, NP1-L2, NP1-L3, NP1-NEU
- 3-1/C 500KCmil, 1-1/C 250KCmil NEU, NP3, 3 1/2"C.
  NP3-L1, NP3-L2, NP3-L3, NP3-NEU

UNIT 2
- 3-1/C 350KCmil, 1-1/C #2 GND, 03P, 3"C.
  03-T1, 03-T2, 03-T3, 03-GND
- 15-1/C #14, MCC-N-2C, 3/4"C.
  IF-92, IF-93, IF-94, IF-95, 3PC1-*, 3PC2-*, 39C3-*,
  3PC4-*, 3PC5-*, 3PC6-*, (5 SPARES)
- 15-1/C #11, MCC-N-1C, 3/4"C.
  30-WP3-H1, 30-WP3-H2, (13 SPARES)

UNIT 3
- 3-1/C 500KCmil, 1-1/C #2 NEU, ERP, 3 1/2"C.
  ERP-L1, ERP-L2, ERP-L3, ERP-NEU
- 3-1/C 250KCmil, 1-1/C #2/0 NEU, TSP1, 3"C.
  TSP1-UA, TSP1-UB, TSP1-UC, TSP1-UN
- 3-1/C 250KCmil, 1-1/C #2/0 NEU, TSP2, 3"C.
  TSP2-UA, TSP2-UB, TSP2-UC, TSP2-UN

UNIT 4
- 3-1/C #6, 1-1/C #10 GND, 4LP1, 3/4"C.
  4LP1-A, 4LP1-B, 4LP1-C, 4LP1-GND

TEMPLATE T2 (TOP VIEW)
DRAWING E7

MCC-LPGAC-C — FRONT

UNIT 1
- 3-1/C #2, 1-1/C #8 GND, 1LP1, 1 1/4"C
  1LP1-A, 1LP1-B, 1LP1-C, 1LP1-GND
- 3-1/C 250KCmil, 1-1/C #2/0 NEU, EGP3, 3"C,
  EGP3-LA, EGP3-LB, EGP3-LC, EGP3-LN
- 3-1/C 250KCmil, 1-1/C #2/0 NEU, EGP4, 3"C,
  EGP4-LA, EGP4-LB, EGP4-LC, EGP4-LN
- 3-1/C #8, 1-1/C #10GND, 700P, 3/4"C
  700-T1, 700-T2, 700-T3, 700-GND

UNIT 2
- 3-1/C 350KCmil, 1-1/C #2 GND, 04P, 3"C,
  04-T1, 04-T2, 04-T3, 04-GND
- 15-1/C #14, MCC-C-1C, 3/4"C.
  700-1, 700-1A, 700-3, 700-2
  30-WP4-H1, 30-WP4-H2, (9 SPARES)
- 15-1/C #14, MCC-C-2C, 3/4"C.
  IF-99, IF-100, IF-101, IF-102, 4PCI-*, 4PC2-*, 4PC3-*,
  4PC4-*, 4PC5-*, 4PC6-*, (5 SPARES)

TEMPLATE T3 (TOP VIEW)
DRAWING E7

400A TRANSFER SWITCH — FRONT

- 4-1/C #12, EGST, 1"C,
  EGST-27, EGST-28
- 3-1/C 250KCmil, 1-1/C #2/0 NEU, EGP2, 3"C,
  EGP2-GA, EGP2-GB, EGP2-GC, EGP2-GN
- 3-1/C 250KCmil, 1-1/C #2/0 NEU, EGP1, 3"C,
  EGP1-GA, EGP1-GB, EGP1-GC, EGP1-GN
- 3-1/C 250KCmil, 1-1/C #2/0 NEU, EGP4, 3"C,
  EGP4-LA, EGP4-LB, EGP4-LC, EGP4-LN
- 3-1/C 250KCmil, 1-1/C #2/0 NEU, EGP3-3"C,
  EGP3-LA, EGP3-LB, EGP3-LC, EGP3-LN
- 3-1/C 250KCmil, 1-1/C #2/0 NEU, TSP1, 3"C,
  TSP1-UA, TSP1-UB, TSP1-UC, TSP1-UN
- 3-1/C 250KCmil, 1-1/C #2/0 NEU, TSP2, 3"C,
  TSP2-UA, TSP2-UB, TSP2-UC, TSP2-UN

TEMPLATE T4 (TOP VIEW)
DRAWING E7

PULLBOX PB-1 — FRONT

- 3-1/C 500KCmil, 1-1/C 250KCmil NEU, NP5, 3 1/2"C.
  NP5-L1, NP5-L2, NP5-L3, NP5-NEU
- 3-1/C 500KCmil, 1-1/C 250KCmil NEU, NP6, 3 1/2"C.
  NP6-L1, NP6-L2, NP6-L3, NP6-NEU
- 3-1/C 500KCmil, 1-1/C 250KCmil NEU, NP3, 3 1/2"C.
  NP3-L1, NP3-L2, NP3-L3, NP3-NEU
- 3-1/C 500KCmil, 1-1/C 250KCmil NEU, NP4, 3 1/2"C.
  NP4-L1, NP4-L2, NP4-L3, NP4-NEU
- 3-1/C 500KCmil, 1-1/C 250KCmil NEU, NP1, 3 1/2"C.
  NP1-L1, NP1-L2, NP1-L3, NP1-NEU
- 3-1/C 500KCmil, 1-1/C 250KCmil NEU, NP2, 3 1/2"C.
  NP2-L1, NP2-L2, NP2-L3, NP2-NEU

TEMPLATE T5 (TOP VIEW)
DRAWING E7

MCP-LPGAC (DWG. E-16, E-17) — FRONT

- 6-1/C #12, MCP-800P, 3/4"C.
  26-800A-4, 26-800A-N, 26-800A-G,
  26-800B-4, 26-800B-N, 26-800B-G
- 6-1/C #12, MCP-900P, 3/4"C.
  28-900A-4, 28-900A-N, 28-900A-G,
  28-900B-4, 28-900B-N, 28-900B-G
- 6-1/C #14, MCP-6C, 3/4"C.
  25-101-H, 25-101-N, 25-101-G,
  25-201-H, 25-201-N, 25-201-G
- 5-1/C #14, MCP-7C, 3/4"C.
  PS-101-(+), PS-101-(-), SP,
  101-1A, 101-1B
- 6-1/C #14, MCP-8C, 3/4"C.
  25-301-H, 25-301-N, 25-301-G,
  25-401-H, 25-401-N, 25-401-G
- 6-1/C #14, MCP-9C, 3/4"C.
  25-501-H, 25-501-N, 25-501-G,
  25-601-H, 25-601-N, 25-601-G
- 8-1/C #14, MCP-10C, 3/4"C.
  26-101-H1, 26-101-N1, 26-101-G1, 26-101-H1A
  26-101-H2, PS-101A-(-), PS-101A-(+), 26-101-H2A
- 5-1/C #14, MCP-11C, 3/4"C.
  700-1A, 700-1B, (3 SPARES)
- 12-1/C #14, MCP-3C, 3/4"C.
  101-1A, 101-1B, 3PC1-*, 3PC1-*-2,
  4PC1-*, 4PC1-*-2, (6 SPARES)
- 5-1/C #14, MCP-12C, 3/4"C.
  25-700-H, 25-700-N, 25-700-G, (2 SPARES)
- 15-1/C #14, MCC-C-1C, 3/4"C.
  700-1, 700-1A, 700-3, 700-2
  30-WP4-H1, 30-WP4-H2, (9 SPARES)
- 15-1/C #14, MCC-N-1C, 3/4"C.
  30-WP3-H1, 30-WP3-H2, (13 SPARES)
- 5-1/C #14, MCP-14C, 3/4"C.
  26-101-H2, 26-101-H2A, (3 SPARES)
- 2-1/C #14, MCP-13C, 3/4"C.
  702-1A, 702-1B

TEMPLATE T6T (TOP VIEW)
DRAWING. E7

PULLBOX PB-2 — FRONT

- 6-1/C #12, HTRP, 3/4"C
  19-H, 19-N, 19-GND
  21-H, 21-N, 21-GND
- 9-1/C #12, EGXP, 1"C
  13-H, 13-N, 13-GND
  15-H, 15-N, 15-GND
  17-H, 17-N, 17-GND
- 4-1/C #14, EGST, 1"C,
  EGST-27, EGST-28, SP, SP
- 3-1/C 250KCmil, 1-1/C #2/0 NEU, EGP1, 3"C.
  EGP1-GA, EGP1-GB, EGP1-GC, EGP1-GN
- 3-1/C 250KCmil, 1-1/C #2/0 NEU, EGP2, 3"C,
  EGP2-GA, EGP2-GB, EGP2-GC, EGP2-GN
- SP-1, 1"C
- 3-1/C 350KCmil, 1-1/C #2 GND, 04P, 3"C,
  04-T1, 04-T2, 04-T3, 04-GND
- 25-1/C #14, TJB-2C, 1"C
  3PC1-*-2, 3PC2-*, 3PC3-*, 3PC4-*, 3PC5-*, 3PC6-*,
  4PC1-*-2, 4PC2-*, 4PC3-*, 4PC4-*, 4PC5-*, 4PC6-*, (13 SPARES)
- 44-1/C #14, TJB-1C, 1-1/2"C
  IF-92, IF-93, IF-94, IF-95, IF-99, IF-100, IF-101, IF-102,
  702-1, 702-2, 101-1A, 101-1B, 34-800A-3, 34-800A-4,
  34-800A-5, 34-800A-6, 34-800B-3, 34-800B-4, 34-800B-5,
  34-800B-6, 34-800C-3, 34-800C-4, 34-800C-5, 34-800C-6, (4 SPARES)
- 3-1/C 350KCmil, 1-1/C #2 GND, 03P, 3"C,
  03-T1, 03-T2, 03-T3, 03-GND
- 3-1/C 500KCmil, 1-1/C #2 NEU, ERP, 3 1/2"C,
  ERP-L1, ERP-L2, ERP-L3, ERP-NEU

TEMPLATE T6B (BOTTOM VIEW)
DRAWING. E7

PULLBOX PB-2 — FRONT

- 9-1/C #12, EGXP, 1"C
  13-H, 13-N, 13-GND
  15-H, 15-N, 15-GND
  17-H, 17-N, 17-GND
- 4-1/C #14, EGST, 1"C,
  EGST-27, EGST-28, SP, SP
- 3-1/C 250KCmil, 1-1/C #2/0 NEU, EGP1, 3"C.
  EGP1-GA, EGP1-GB, EGP1-GC, EGP1-GN
- 3-1/C 250KCmil, 1-1/C #2/0 NEU, EGP2, 3"C,
  EGP2-GA, EGP2-GB, EGP2-GC, EGP2-GN
- SP-1, 1"C
- 3-1/C 350KCmil, 1-1/C #2 GND, 3-1/C #12, 04P, 3"C,
  04-T1, 04-T2, 04-T3, 04-GND, 21-H, 21-N, 21-GND
- 25-1/C #14, TJB-2C, 1"C
  3PC1-*-2, 3PC2-*, 3PC3-*, 3PC4-*, 3PC5-*, 3PC6-*,
  4PC1-*-2, 4PC2-*, 4PC3-*, 4PC4-*, 4PC5-*, 4PC6-*, (13 SPARES)
- 44-1/C #14, TJB-1C, 1-1/2"C
  IF-92, IF-93, IF-94, IF-95, IF-99, IF-100, IF-101, IF-102,
  702-1, 702-2, 101-1A, 101-1B, 34-800A-3, 34-800A-4,
  34-800A-5, 34-800A-6, 34-800B-3, 34-800B-4, 34-800B-5,
  34-800B-6, 34-800C-3, 34-800C-4, 34-800C-5, 34-800C-6, (4 SPARES)
- 3-1/C 350KCmil, 1-1/C #2 GND, 3-1/C #12, 03P, 3"C,
  03-T1, 03-T2, 03-T3, 03-GND, 19-H, 19-N, 19-GND
- 3-1/C 500KCmil, 1-1/C #2 NEU, ERP, 3 1/2"C,
  ERP-L1, ERP-L2, ERP-L3, ERP-NEU

TEMPLATE T7 (TOP VIEW)
DRAWING. E7

TJB-LPGAC (DWG. E-18) — FRONT

- 12-1/C #14, MCP-3C, 3/4"C
  101-1A, 101-1B, 3PC1-*, 3PC1-*-2, 4PC1-*, 4PC1-*-2 (6 SPARES)
- SP-1, 1"C
- 16-1/C #14-3/4"C, CS-800
  34-800A-3, 34-800A-4, 34-800A-5, 34-800A-6,
  34-800B-3, 34-800B-4, 34-800B-5, 34-800B-6,
  34-800C-3, 34-800C-4, 34-800C-5, 34-800C-6, (4 SPARES)
- 44-1/C #14, TJB-1C, 1-1/2"C
  IF-92, IF-93, IF-94, IF-95, IF-99, IF-100, IF-101, IF-102,
  702-1, 702-2, 101-1A, 101-1B, 34-800A-3, 34-800A-4,
  34-800A-5, 34-800A-6, 34-800B-3, 34-800B-4, 34-800B-5,
  34-800B-6, 34-800C-3, 34-800C-4, 34-800C-5, 34-800C-6,
  26-800-1, 26-800-2, 26-800-3, 26-800-4, 26-801-1, 26-801-2,
  26-801-3, 26-801-4, (12 SPARES)
- 25-1/C #14, TJB-2C, 1"C
  3PC1-*-2, 3PC2-*, 3PC3-*, 3PC4-*, 3PC5-*, 3PC6-*,
  4PC1-*-2, 4PC2-*, 4PC3-*, 4PC4-*, 4PC5-*, 4PC6-*, (13 SPARES)
- 15-1/C #14, MCC-N-2C, 3/4"C.
  IF-92, IF-93, IF-94, IF-95, 3PC1-*, 3PC2-*, 39C3-*,
  3PC4-*, 3PC5-*, 3PC6-*, (5 SPARES)
- 15-1/C #14, MCC-C-2C, 3/4"C.
  IF-99, IF-100, IF-101, IF-102, 4PCI-*, 4PC2*, 4PC3-*,
  4PC4-*, 4PC5-*, 4PC6-*, (5 SPARES)
- 4-1/C #14, 702-1C, 3/4"C.
  702-1, 702-2, (2 SPARES)
- 8-1/C #14, 800-1C, 3/4"C.
  26-800-1, 26-800-2, 26-800-3, 26-800-4,
  26-801-1, 26-801-2, 26-801-3, 26-801-4

NASSAU COUNTY DEPARTMENT OF HEALTH
DIVISION OF ENVIRONMENTAL HEALTH
These plans are hereby approved
SHEET 52 OF 69
See first sheet hereof for date and signature

REFERENCE DRAWING:
E-7 TREATMENT BUILDING CONDUIT PLAN

CAUTION: IF SHEET IS LESS THAN 34"x22" USE GRAPHIC SCALE

UNAUTHORIZED ALTERATION OR ADDITION TO THIS PLAN IS A VIOLATION OF SECTION 7209 OF THE NEW YORK STATE EDUCATION LAW. UNLESS THE PERSON IS ACTING UNDER THE DIRECTION OF A LICENSED PROFESSIONAL ENGINEER, ANY PLAN ALTERATIONS BY ANOTHER ENGINEER MUST BE MARKED AS SUCH, INCLUDING THE SIGNATURE AND SEAL OF THE ALTERING ENGINEER.

SYM	DESCRIPTION	DATE	APPR
1	APPROVAL SUBMISSION, REV 1	6/11/12	-

DEPARTMENT OF THE NAVY — NAVAL FACILITIES ENGINEERING COMMAND
NAVAL FACILITIES ENGINEERING COMMAND ~ MID-ATLANTIC
NORTHEAST IPT — NAVAL STATION – NORFOLK, VIRGINIA
AQUA NY — NASSAU COUNTY, NEW YORK

MODIFICATIONS TO WATER TREATMENT FACILITY

ELECTRICAL - CONDUIT TEMPLATES

CHIEF ENG/ARCH GESSLER
PM/DM
REVIEWED BY GESSLER
DES GESSLER
DR HORTON

CODE ID. NO. 80091 | SIZE D
SCALE:
MAXIMO NO. N62470-08-D-1001
JOB ORDER NO. WE-25
SPEC. NO.
CONSTR. CONTR. NO. 112G02223
NAVFAC DRAWING NO.
SHEET ..... OF ---

E-10

NOV 07 2012

52

UNAUTHORIZED ALTERATION OR ADDITION TO THIS PLAN IS A VIOLATION OF SECTION 7209 OF THE NEW YORK STATE EDUCATION LAW, UNLESS THE PERSON IS ACTING UNDER THE DIRECTION OF A LICENSED PROFESSIONAL ENGINEER. ANY PLAN ALTERATIONS BY ANOTHER ENGINEER MUST BE MARKED AS SUCH, INCLUDING THE SIGNATURE AND SEAL OF THE ALTERING ENGINEER.

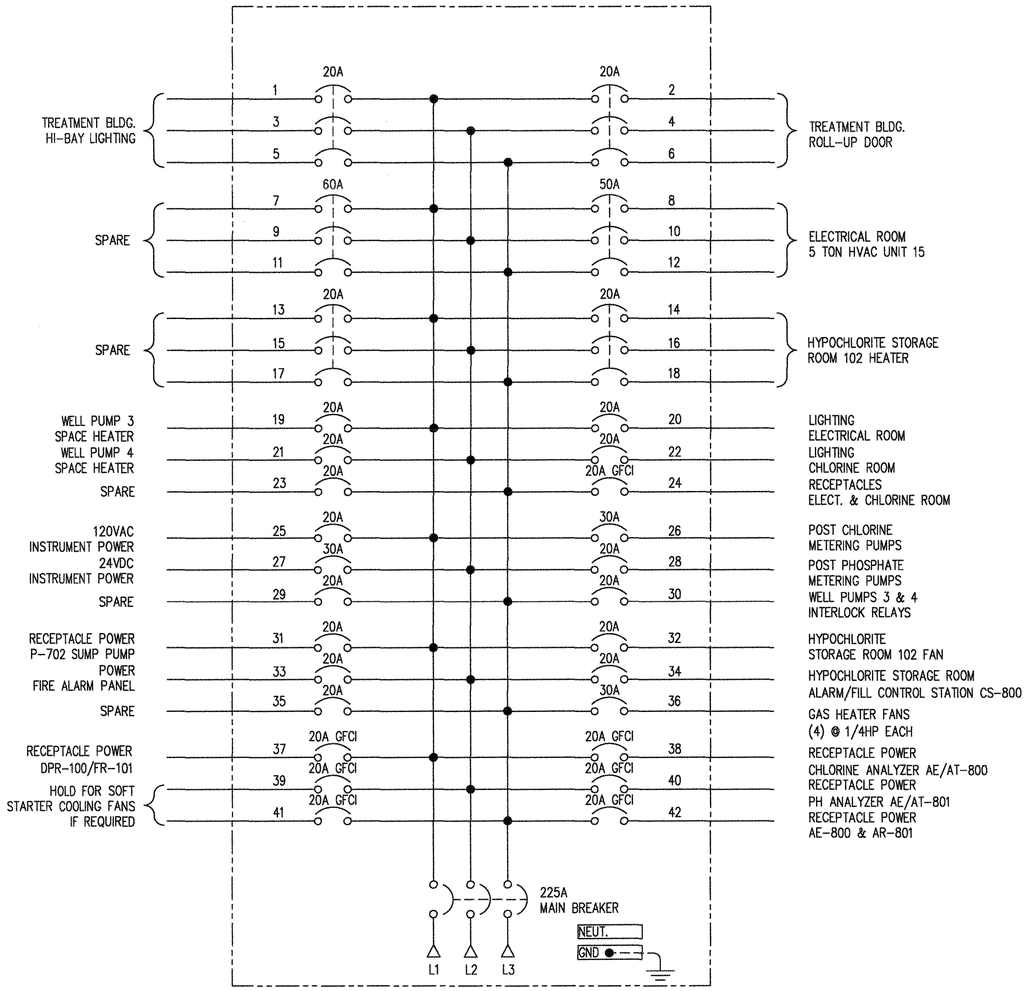

MISCELLANEOUS POWER DISTRIBUTION PANEL MP/LDP-1 RISER DIAGRAM (CRITICAL)

208/120V, 3PH, 4WIRE, 60HZ
225A, 42 POLE, NEMA 1

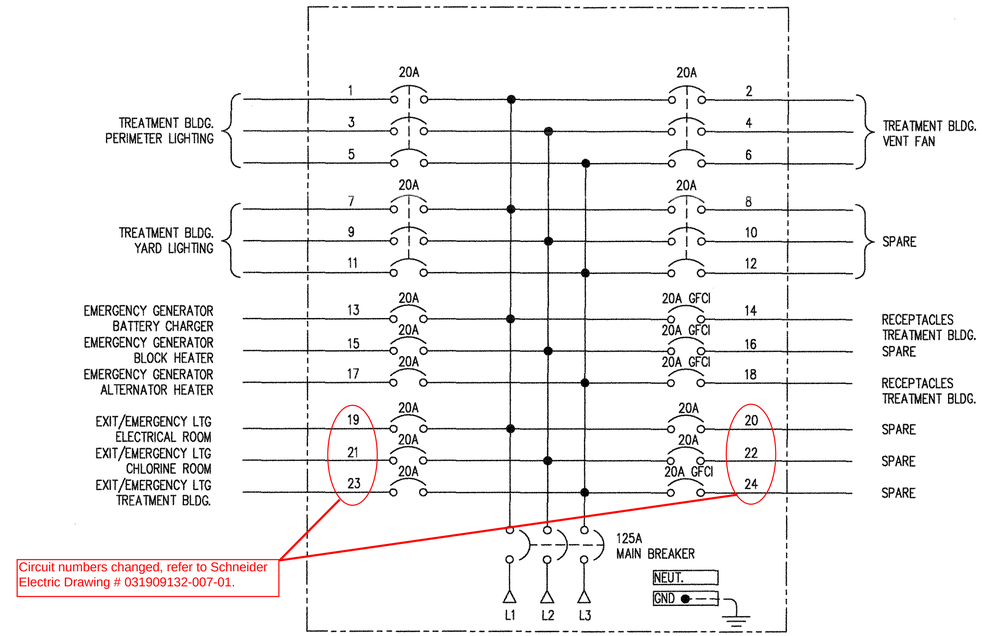

Circuit numbers changed, refer to Schneider Electric Drawing # 031909132-007-01.

MISCELLANEOUS POWER DISTRIBUTION PANEL MP/LDP-2 RISER DIAGRAM (NON-CRITICAL)

208/120V, 3PH, 4WIRE, 60HZ
125A, 24 POLE, NEMA 1

Refer to the following two pages (Schneider Electric Drawing # 031309132-006-01 & 031909132-007-01) for additional details on the riser diagrams.

NASSAU COUNTY DEPARTMENT OF HEALTH
DIVISION OF ENVIRONMENTAL HEALTH
These plans are hereby approved
SHEET 53 OF 69
See first sheet hereof for date and signature

REFERENCE DRAWINGS:

E-4 ELEMENTARY DIAGRAMS – SHT. 1
E-6 ELEMENTARY DIAGRAMS – SHT. 3
E-12 LIGHTING & MISC. POWER PLAN
E-16 MCP-LPGAC ELEMENTARY DIAGRAMS – SHT. 1
E-17 MCP-LPGAC ELEMENTARY DIAGRAMS – SHT. 2
E-18 MCP-LPGC ELEMENTARY DIAGRAMS – SHT. 3
E-20 ALARM/FILL PANEL ELEMENTARY DIAGRAM

CAUTION: IF SHEET IS LESS THAN 34"x22" USE GRAPHIC SCALE

1	APPROVAL SUBMISSION, REV 1	9/11/12	APPR
	DESCRIPTION	DATE	

NAVFAC

STATE OF NEW YORK ★ LICENSED PROFESSIONAL ENGINEER ★ ROBERT A. STRAUSS 098075-1

DES GESSLER | DR HORTON
REVIEWED BY GESSLER
PM/DM
CHIEF ENG/ARCH GESSLER

DEPARTMENT OF THE NAVY
NAVAL FACILITIES ENGINEERING COMMAND
NORTHEAST IPT
NAVAL FACILITIES ENGINEERING COMMAND ~ MID-ATLANTIC
NAVAL STATION - NORFOLK, VIRGINIA
AQUA NY
NASSAU COUNTY, NEW YORK
MODIFICATIONS TO WATER TREATMENT FACILITY
ELECTRICAL - PANEL RISER DIAGRAMS

CODE ID. NO. 80091 | SIZE D
SCALE:
MAXIMO NO. N52470-08-D-1001
JOB ORDER NO. WE-25
SPEC. NO.
CONSTR. CONTR. NO. 112G02223
NAVFAC DRAWING NO.
SHEET OF --
E-11

NOV 07 2012

53

REV	DESCRIPTION	BY	DATE	–	----	--	--/--/--
–	----	--	--/--/--	–	----	--	--/--/--

CKT NO	ACCESSORIES	TYPE	RATING AMP/P	RATING AMP/P	TYPE	ACCESSORIES	CKT NO
1		QOB–VH	60/3	50/3	QOB–VH		2
3							4
5							6
7		QOB–VH	20/3	20/3	QOB–VH		8
9							10
11							12
13		QOB–VH	20/3	20/3	QOB–VH		14
15							16
17							18
19		QOB–VH	30/1	30/1	QOB–VH		20
21		QOB–VH	30/1	20/1	QOB–VH		22
23		QOB–VH	20/1	20/1	QOB–VH		24
25		QOB–VH	20/1	20/1	QOB–VH		26
27		QOB–VH	20/1	20/1	QOB–VH		28
29		QOB–VH	20/1	20/1	QOB–VH		30
31		QOB–VH	20/1	20/1	QOB–VH		32
33		QOB–VH	20/1	20/1	QOB–VH		34
35		QOB–VHGFI	20/1	20/1	QOB–VH		36
37		QOB–VHGFI	20/1	20/1	QOB–VHGFI		38
39		QOB–VHGFI	20/1	20/1	QOB–VHGFI		40
41		QOB–VHGFI	20/1	20/1	QOB–VHGFI		42

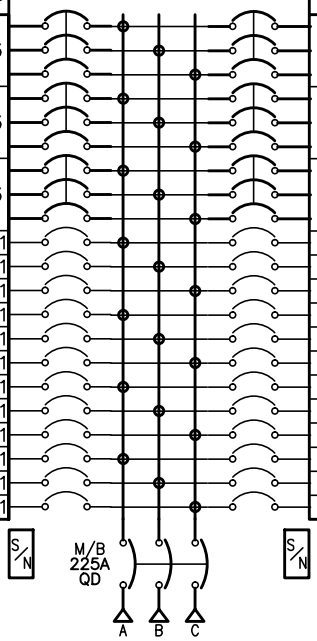

PHYSICAL DATA

ENCLOSURE Type 3R/5/12
FRONT CAT#: Trim w/Box
BOX CAT#: MH50WP
DIMENSIONS:
50''H x 20''W x 6.5''D
WIRE BENDING SPACE:
TOP – 5
BOTTOM – 9.26
SIDE – 6.13
PBA: 711

BUSSING: Copper
Silver/Tin Plated

OPTIONAL FEATURES:
SHIP TOGETHER
ALUMINUM SOLID NEUTRAL
ALUMINUM GROUND BAR

----------STANDARD EQUIPMENT NAMEPLATE----------
Engraved as Follows
LINE 1: LP–MPLDP–1
COLOR: White Surface / Black Letters
SIZE: 3.50" Wide x 1.00" High (Std)
TYPE: Plastic/Adhesive – Screw–on

ELECTRICAL DATA

SYSTEM: 208Y/120V 3Ph 4W 60Hz
System Ampacity: 225A
22kA SYMS. SCCR

MAIN: MAIN BREAKER QD 225A
Bottom FEED
25kA AIR
INCOMING CONDUCTORS(S) PER NEC:
#4 – 300 kcmil

BRANCH MOUNTING TYPE: BOLT–ON

----------BRANCH SUMMATION----------

1 – 60A/3P QOB–VH	4 – 20A/3P QOB–VH
3 – 30A/1P QOB–VH	14 – 20A/1P QOB–VH
7 – 20A/1P QOB–VHGFI	1 – 50A/3P QOB–VH

JOB NAME:	AQUA NEW YORK	EQUIPMENT DESIGNATION:	LP–MPLDP–1
JOB LOCATION:	LEVITTOWN NY	EQUIPMENT TYPE:	NQ (Circuit Breaker Type) PANEL 1 OF 1
DRAWN BY:	CAD	DRAWING TYPE:	ONE LINE DIAGRAM
ENGR:			
DATE:	October 17 2013		
DRAWING STATUS:	APPROVAL	DWG# 031909132–006–01	PG 1 OF 1 REV –

REV	DESCRIPTION	BY	DATE	–	----	--	--/--/--
–	----	--	--/--/--	–	----	--	--/--/--

CKT NO	ACCESSORIES	TYPE	RATING AMP/P	RATING AMP/P	TYPE	ACCESSORIES	CKT NO
1		QOB–VH	20/3	20/3	QOB–VH		2
3							4
5							6
7		QOB–VH	20/3	20/3	QOB–VH		8
9							10
11							12
13		QOB–VH	20/1	20/1	QOB–VH		14
15		QOB–VH	20/1	20/1	QOB–VH		16
17		QOB–VH	20/1	20/1	QOB–VH		18
19		QOB–VH	20/1	20/1	QOB–VH		20
21	PREPARED SPACE	QOB–VH	20/1	20/1	QOB–VH	PREPARED SPACE	22
23	PREPARED SPACE	QOB–VH	20/1	20/1	QOB–VH	PREPARED SPACE	24
25	PREPARED SPACE	QOB–VH	20/1	20/1	QOB–VH	PREPARED SPACE	26
27		QOB–VHGFI	20/1	20/1	QOB–VHGFI		28
29		QOB–VHGFI	20/1	20/1	QOB–VHGFI		30

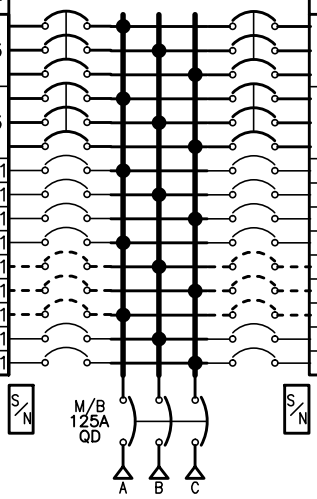

PHYSICAL DATA

ENCLOSURE Type 3R/5/12
FRONT CAT#: Trim w/Box
BOX CAT#: MH44WP
DIMENSIONS:
44''H x 20''W x 6.5''D
WIRE BENDING SPACE:
TOP – 5
BOTTOM – 9.26
SIDE – 6.13
PBA: 711

BUSSING: Copper
Silver/Tin Plated

OPTIONAL FEATURES:
SHIP TOGETHER
BRANCH USER PLACEMENT
ALUMINUM SOLID NEUTRAL
ALUMINUM GROUND BAR

----------STANDARD EQUIPMENT NAMEPLATE----------
Engraved as Follows
LINE 1: LP–MPLDP–2
COLOR: White Surface / Black Letters
SIZE: 3.50" Wide x 1.00" High (Std)
TYPE: Plastic/Adhesive – Screw–on

ELECTRICAL DATA

SYSTEM: 208Y/120V 3Ph 4W 60Hz
System Ampacity: 125A
22kA SYMS. SCCR

MAIN: MAIN BREAKER QD 125A
Bottom FEED
25kA AIR
INCOMING CONDUCTORS(S) PER NEC:
#4 – 300 kcmil

BRANCH MOUNTING TYPE: BOLT–ON

----------BRANCH SUMMATION----------

4 – 20A/3P QOB–VH	8 – 20A/1P QOB–VH
6 – 20A/1P–PS QOB–VH	4 – 20A/1P QOB–VHGFI

JOB NAME:	AQUA NEW YORK	EQUIPMENT DESIGNATION:	LP–MPLDP–2
JOB LOCATION:	LEVITTOWN NY	EQUIPMENT TYPE:	NQ (Circuit Breaker Type) PANEL 1 OF 1
DRAWN BY:	CAD	DRAWING TYPE:	ONE LINE DIAGRAM
ENGR:			
DATE:	October 17 2013		
DRAWING STATUS:	APPROVAL	DWG# 031909132–007–01	PG 1 OF 1 REV –

UNAUTHORIZED ALTERATION OR ADDITION TO THIS PLAN IS A VIOLATION OF SECTION 7209 OF THE NEW YORK STATE EDUCATION LAW, UNLESS THE PERSON IS ACTING UNDER THE DIRECTION OF A LICENSED PROFESSIONAL ENGINEER. ANY PLAN ALTERATIONS BY ANOTHER ENGINEER MUST BE MARKED AS SUCH, INCLUDING THE SIGNATURE AND SEAL OF THE ALTERING ENGINEER.

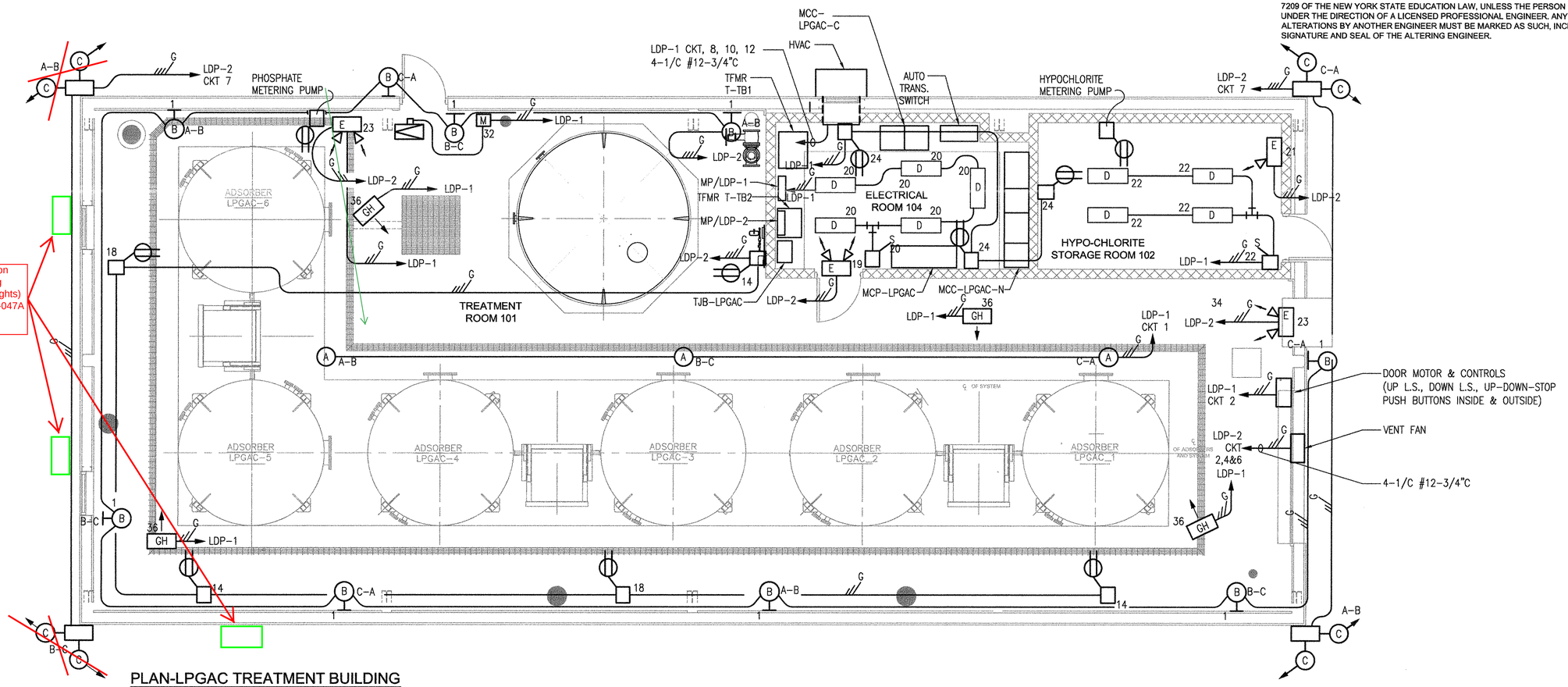

PLAN-LPGAC TREATMENT BUILDING

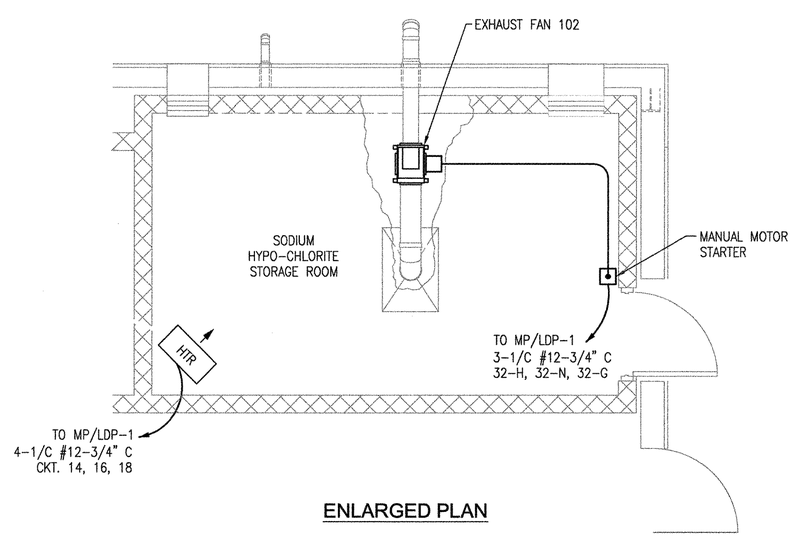

ENLARGED PLAN

NASSAU COUNTY DEPARTMENT OF HEALTH
DIVISION OF ENVIRONMENTAL HEALTH
These plans are hereby approved
SHEET 54 OF 69
See first sheet hereof for date and signature

REFERENCE DRAWING:

E-11 PANEL RISER DIAGRAMS
E-13 LIGHTING SCHEDULE & DETAIL

3.30.12

CAUTION: IF SHEET IS LESS THAN 34"x22" USE GRAPHIC SCALE

SYM	DESCRIPTION	DATE	APPR
1	APPROVAL SUBMISSION	3/30/12	-

NAVFAC

DEPARTMENT OF THE NAVY
NAVAL FACILITIES ENGINEERING COMMAND
NAVAL FACILITIES ENGINEERING COMMAND ~ MID-ATLANTIC
NORTHEAST IPT
NAVAL STATION - NORFOLK, VIRGINIA
AQUA NY
NASSAU COUNTY, NEW YORK
MODIFICATIONS TO WATER TREATMENT FACILITY
ELECTRICAL -LIGHTING & MISC. PLAN

DES | DR
REVIEWED BY
PM/DM
CHIEF ENG/ARCH

CODE ID. NO. 80091 | SIZE D
SCALE:
MAXIMO NO. N62470-08-D-1001
JOB ORDER NO. WE-25
SPEC. NO.
CONSTR. CONTR. NO. 112G02223
NAVFAC DRAWING NO.
SHEET OF --

E-12

NOV 07 2012
54

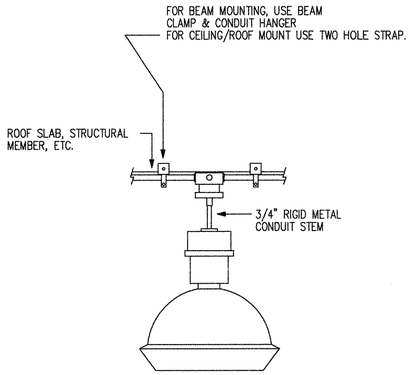

DETAIL NO. 1
PENDANT MOUNT– LOW BAY (A)

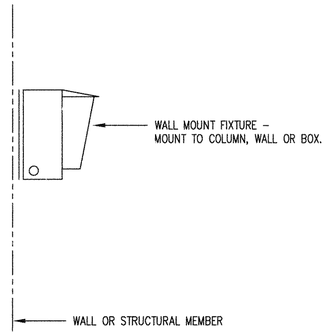

DETAIL NO. 3
WALL MOUNT (B)

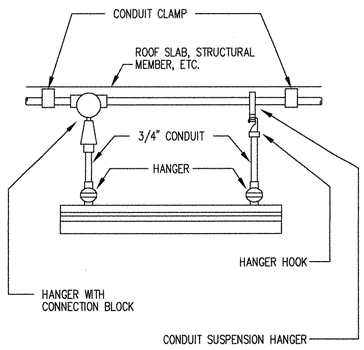

DETAIL NO. 4
PENDANT MOUNT – FLUORESCENT (D)

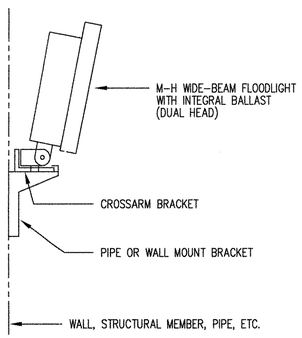

DETAIL NO. 5
FLOODLIGHT (C)

UNAUTHORIZED ALTERATION OR ADDITION TO THIS PLAN IS A VIOLATION OF SECTION 7209 OF THE NEW YORK STATE EDUCATION LAW, UNLESS THE PERSON IS ACTING UNDER THE DIRECTION OF A LICENSED PROFESSIONAL ENGINEER. ANY PLAN ALTERATIONS BY ANOTHER ENGINEER MUST BE MARKED AS SUCH, INCLUDING THE SIGNATURE AND SEAL OF THE ALTERING ENGINEER.

FIXTURE SCHEDULE

QTY.	MTG. HEIGHT	DETAIL No.	SYMBOL	REMARKS
4	20'–0"	N/A	GH	GAS HEATER, WITH 1/4HP 120V BLOWER.
3	27'–0"	1	A	208V, 250W METAL HALIDE, PULSE START MH BALLAST, WITH WIRING BOX, DIFFUSE PRISMATIC ACRYLIC REFLECTOR, MEDIUM BAY FIXTURE.
8	10'–0"	3	B	208V, 100W METAL HALIDE, WALL MOUNT FIXTURE WITH PULSE START BALLAST.
8	8'–0"	4	D	120V, 4' FLUORESCENT FIXTURE, WITH 2–40W TYPE T12 BULBS.
4	9'–0"	N/A		INDUSTRIAL EMERGENCY LIGHTING UNIT WITH EXIT SIGN, 120VAC INPUT, 12VDC OUTPUT, W/2 25W HEADS, 100 WATT CAPACITY, WITH MAINTENANCE FREE SEALED LEAD FREE CALCIUM BATTERY, AND FULLY AUTOMATIC CHARGER.
4	22'–0"	5	C C	INDUSTRIAL FLOODLIGHT, DUAL HEAD, METAL HALIDE, 208V, 400W WITH HPF BALLAST, WALL MOUNTED, ADJUSTABLE HEADS VERTICAL AND HORIZONTAL, FULLY GASKETED WITH CAST ALUMINUM REFLECTOR.

NASSAU COUNTY DEPARTMENT OF HEALTH
DIVISION OF ENVIRONMENTAL HEALTH
These plans are hereby approved
SHEET 55 OF 69
See first sheet hereof for date and signature

REFERENCE DRAWINGS:

E–1 LEGEND & GENERAL NOTES
E–11 PANEL RISER DIAGRAMS
E–12 LIGHTING & MISC. POWER

CAUTION: IF SHEET IS LESS THAN 34"x22" USE GRAPHIC SCALE

STM	DESCRIPTION	DATE	APPR
-	NASSAU COUNTY DEPT. OF HEALTH SUBMITTAL	9/9/2011	-

NAVFAC

STATE OF NEW YORK · ROCCO A. CITRAUDO · 089075-1 · LICENSED PROFESSIONAL ENGINEER
9.2.11

DES GESSLER | DR HORTON
REVIEWED BY GESSLER
PM/DM DDB
CHIEF ENG/ARCH GESSLER

DEPARTMENT OF THE NAVY
NAVAL FACILITIES ENGINEERING COMMAND ~ MID-ATLANTIC
NAVAL STATION – NORFOLK, VIRGINIA
NORTHEAST IPT
AQUA NY
NASSAU COUNTY, NEW YORK
MODIFICATIONS TO WATER TREATMENT FACILITY

ELECTRICAL - LIGHTING SCHEDULE & DETAILS

CODE ID. NO. 80091 | SIZE D
SCALE: -
MAXIMO NO. N62470-08-D-1001
JOB ORDER NO. WE-25
SPEC. NO. --
CONSTR. CONTR. NO. 112G02223
NAVFAC DRAWING NO. ...
SHEET ..... OF --

E-13

NOV 07 2012

55

UNAUTHORIZED ALTERATION OR ADDITION TO THIS PLAN IS A VIOLATION OF SECTION 7209 OF THE NEW YORK STATE EDUCATION LAW, UNLESS THE PERSON IS ACTING UNDER THE DIRECTION OF A LICENSED PROFESSIONAL ENGINEER. ANY PLAN ALTERATIONS BY ANOTHER ENGINEER MUST BE MARKED AS SUCH, INCLUDING THE SIGNATURE AND SEAL OF THE ALTERING ENGINEER.

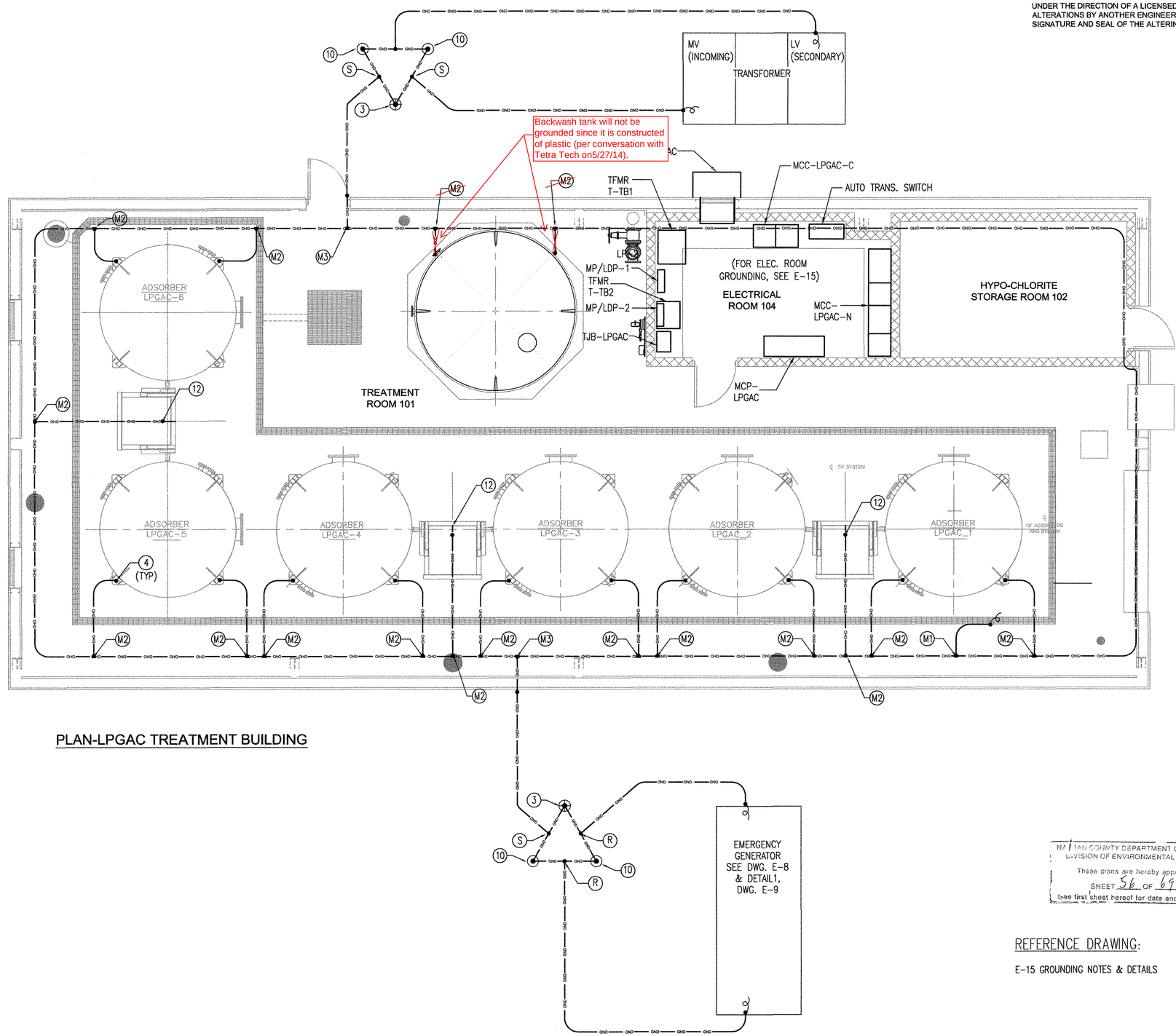

PLAN-LPGAC TREATMENT BUILDING

NASSAU COUNTY DEPARTMENT OF HEALTH
DIVISION OF ENVIRONMENTAL HEALTH
These plans are hereby approved
SHEET 56 OF 69
See first sheet hereof for date and signature

REFERENCE DRAWING:

E-15 GROUNDING NOTES & DETAILS

STATE OF NEW YORK ROBERT A. STRAUSS 086075-1 LICENSED PROFESSIONAL ENGINEER

3.30.12

CAUTION: IF SHEET IS LESS THAN 34"x22" USE GRAPHIC SCALE

SYM	DESCRIPTION	DATE	APPR
1	APPROVAL SUBMISSION	3/30/12	-

NAVFAC

DES | DR
REVIEWED BY
PM/DM
CHIEF ENG/ARCH

DEPARTMENT OF THE NAVY
NAVAL FACILITIES ENGINEERING COMMAND
NAVAL FACILITIES ENGINEERING COMMAND ~ MID-ATLANTIC
NORTHEAST IPT NAVAL STATION - NORFOLK, VIRGINIA
AQUA NY NASSAU COUNTY, NEW YORK
MODIFICATIONS TO WATER TREATMENT FACILITY
ELECTRICAL -GROUNDING PLAN

CODE ID. NO. 80091 | SIZE D
SCALE:
MAXIMO NO. N62470-08-D-1001
JOB ORDER NO. WE-25
SPEC. NO.
CONSTR. CONTR. NO. 112G02223
NOV 07 2012
NAVFAC DRAWING NO.
SHEET OF --
E-14

56

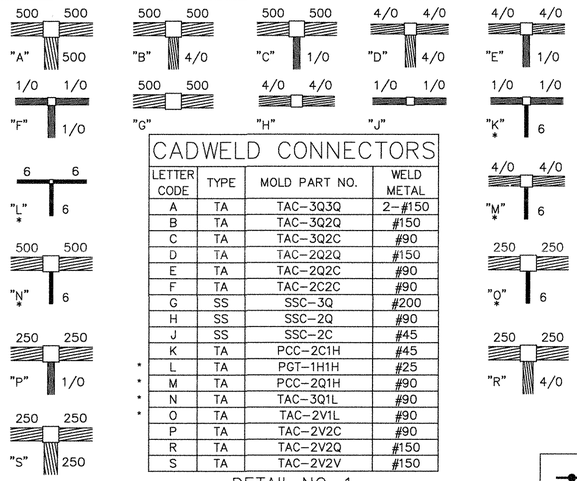

* REQUIRES WRAP SLEEVE #B140A.

CADWELD CONNECTORS

LETTER CODE	TYPE	MOLD PART NO.	WELD METAL
A	TA	TAC-3Q3Q	2-#150
B	TA	TAC-3Q2Q	#150
C	TA	TAC-3Q2C	#90
D	TA	TAC-2Q2Q	#150
E	TA	TAC-2Q2C	#90
F	TA	TAC-2C2C	#90
G	SS	SSC-3Q	#200
H	SS	SSC-2Q	#90
J	SS	SSC-2C	#45
K	TA	PCC-2C1H	#45
* L	TA	PGT-1H1H	#25
* M	TA	PCC-2Q1H	#90
* N	TA	TAC-3Q1L	#90
* O	TA	TAC-2V1L	#90
P	TA	TAC-2V2C	#90
R	TA	TAC-2V2Q	#150
S	TA	TAC-2V2V	#150

DETAIL NO. 1

CABLE TO CABLE CONNECTION – WELDED

CADWELD CONNECTORS

MOTOR HP	CABLE SIZE	TYPE	MOLD PART NO.	WELD METAL	LUG SIZE	LUG PART NO.	BOLT SIZE
< 75	6 *	LA	LAC-1LCE	#45	1/8 x 1	B-101-CE-OL	3/8 x 1
75-250	1/0	LA	LAC-2CEE	#65	1/4 x 1	B-101-EE-OL	1/2 x 1 1/4
> 250	4/0	LA	LAC-2QEE	#90	1/4 x 1	B-101-EE-OL	1/2 x 1 1/4

* REQUIRES WRAP SLEEVE #B140A.

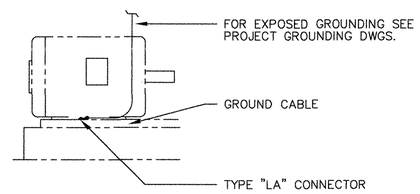

DETAIL NO. 2

MOTOR GROUNDING

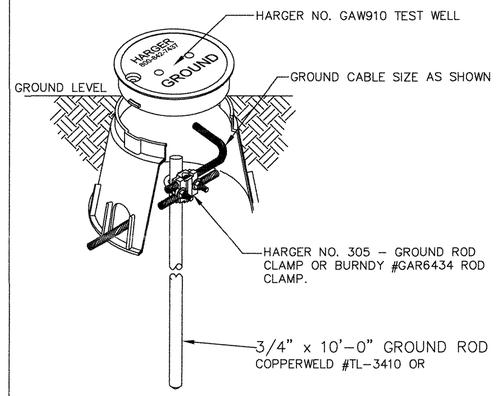

DETAIL NO. 3

GROUND ROD – TEST WELL

UNAUTHORIZED ALTERATION OR ADDITION TO THIS PLAN IS A VIOLATION OF SECTION 7209 OF THE NEW YORK STATE EDUCATION LAW, UNLESS THE PERSON IS ACTING UNDER THE DIRECTION OF A LICENSED PROFESSIONAL ENGINEER. ANY PLAN ALTERATIONS BY ANOTHER ENGINEER MUST BE MARKED AS SUCH, INCLUDING THE SIGNATURE AND SEAL OF THE ALTERING ENGINEER.

LEGEND

— GND — GND — GND — = ABOVE GRADE GROUND

— GND — GND — GND — = BELOW GRADE GROUND

= PIGTAIL, LEAVE 12 FT. LONG UNLESS LENGTH IS OTHERWISE SPECIFIED

SYMBOL W/NUMBER

(1) = NUMBER REFERS TO DETAIL NUMBER THIS DWG

SYMBOL W/LETTER

(A) = REFERS TO APPROPRIATE CODE LETTER IN DETAIL #1 ON THIS DWG

SYMBOL W/LETTER/ NUMBER

(A1) = REFERS TO APPROPRIATE CODE LETTER IN DETAIL #11 ON THIS DWG

=BURIED GROUND ROD, STEEL COPPER CLAD, 3/4" DIA X 10FT LONG, SEE DETAIL NO. 10 THIS DWG

=GROUND ROD, TEST WELL SEE DETAIL NO. 3 THIS DWG

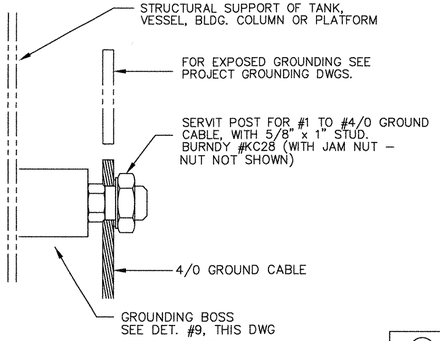

DETAIL NO. 4

TANK/VESSEL/BLDG. COLUMN GROUNDING CONNECTION

CADWELD CONNECTORS

CABLE SIZE	TYPE	MOLD PART NO.	WELD METAL	LUG SIZE	LUG PART NO.	2 BOLTS SIZE
500	LA	LAC-3QEG	#200	1/4 x 1 1/2	B-102-EG-OL	1/2 x 1 1/4
4/0	LA	LAC-2QEE	#90	1/4 x 1	B-102-EE-OL	1/2 x 1 1/4
1/0	LA	LAC-2CEE	#65	1/4 x 1	B-102-EE-OL	1/2 x 1 1/4
4	LA	LAC-1LCE	#45	1/8 x 1	B-102-CE-OL	1/2 x 1 1/4
6 *	LA	LAC-1LCE	#45	1/8 x 1	B-102-CE-OL	1/2 x 1 1/4

* REQUIRES WRAP SLEEVE #B140A.

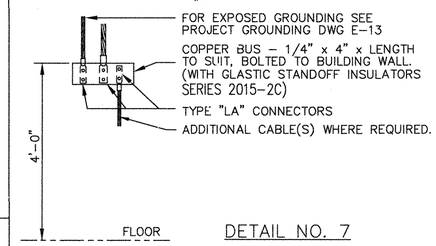

DETAIL NO. 7

STRUCTURAL – BOLTED TO WALL

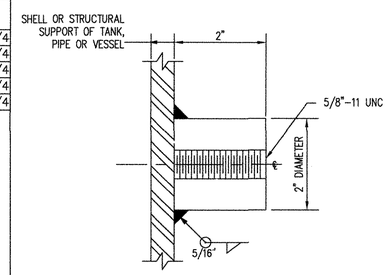

DETAIL–9

GROUNDING BOSS DETAIL

FOR USE WITH 4/0 AWG GROUNDING CONDUCTOR (SEE DETAIL No. 3 THIS DWG)

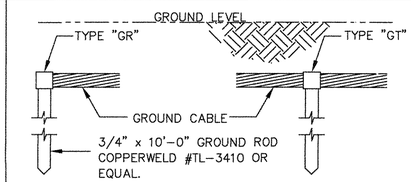

CADWELD CONNECTORS

CABLE SIZE	TYPE	MOLD PART NO.	WELD METAL
500	GR	GRC-183Q	#150
4/0	GR	GRC-182Q	#90
1/0	GR	GRC-182C	#90
500	GT	GTC-183Q	#250
4/0	GT	GTC-182Q	#115
1/0	GT	GTC-182C	#115

DETAIL NO. 10

BURIED GROUND ROD – WELDED

GENERAL GROUNDING NOTES

1 A COMPLETE GROUND SYSTEM SHALL BE INSTALLED IN STRICT COMPLIANCE WITH ARTICLE 250 OF THE NATIONAL ELECTRIC CODE AND THE FOLLOWING. THE CONTRACTOR IS RESPONSIBLE FOR MEETING ALL GROUNDING REQUIREMENTS, WHETHER OR NOT THEY ARE SPECIFICALLY INDICATED ON THE DRAWINGS.

2 GROUNDING CIRCUITS SHALL EMPLOY A SOFT DRAWN BARE COPPER STRANDED CONDUCTOR.

3 SIZE OF THE GROUND CIRCUIT EMPLOYED SHALL BE REGULATED BY THE FOLLOWING:
#6 – CONTROL STATIONS AND EQUIPMENT UNDER 75 HP
#1/0 – EQUIPMENT 75 HP THRU 250 HP
#4/0 – EQUIPMENT OVER 250 HP AND MOTOR CONTROL CENTERS
250 KCMIL – MAIN GROUND LOOP

4 GROUND LOOP SYSTEM SHALL HAVE A MAXIMUM RESISTANCE OF LESS THAN 3 OHMS TO GROUND.

5 MAJOR ITEMS OF EQUIPMENT SUCH AS MOTOR CONTROL CENTERS SHALL BE PROVIDED WITH TWO (2) SEPARATE GROUND PATHS BY THE USE OF COPPER GROUND WIRE BONDING THE EQUIPMENT TO THE BUILDING GROUND SYSTEM.

6 SURFACES WHERE GROUNDING CONNECTIONS ARE TO BE MADE SHALL BE CLEAN AND DRY.

7 STEEL SURFACES SHALL BE GROUND OR FILED TO REMOVE ALL SCALE, RUST AND DIRT.

8 COPPER AND GALVANIZED STEEL SHALL BE CLEANED WITH EMERY CLOTH TO REMOVE OXIDE BEFORE MAKING JUNCTIONS.

9 ALL GROUNDING CONDUCTORS TRAVELING INSIDE CONDUIT SHALL BE INSULATED GREEN WIRE.

10 GROUND CABLE ROUTING IS SHOWN IN A SCHEMATIC FORMAT.

11 ROUTE EXPOSED GROUNDING TAPS OVERHEAD. CLAMP CABLE TO STRUCTURAL STEEL WITH APPLETON "K-CLAMPS" OR EQUAL AT 3-FOOT INTERVALS. ROUTE VERTICAL DROPS ALONG PIPE, CONDUIT OR SUPPORT STEEL.

12 MATERIAL LOCATIONS AS SHOWN ARE DIAGRAMMATIC. ACTUAL LOCATIONS ARE TO BE DETERMINED IN FIELD.

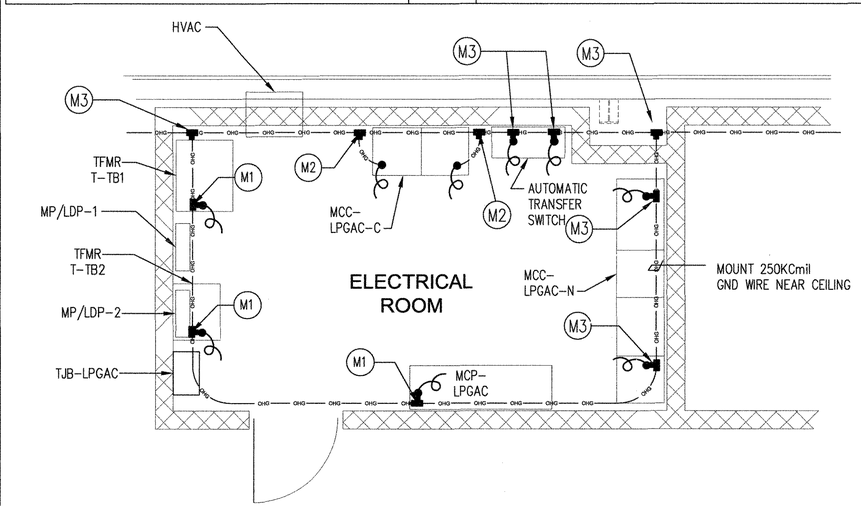

ELECTRICAL ROOM GROUNDING PLAN

DWG. E-14

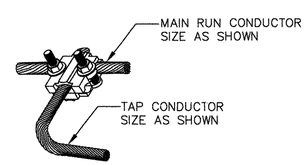

MECHANICAL CONNECTORS

LETTER CODE	MAIN RUN	TAP	FIG. NO.	BURNDY CAT. NO.
M1	250/500	#6 TO #2	1	QPX342C-Y
M2	250/500	1/0 TO 4/0	1	QPX3428-Y
M3	250/500	250 TO 500	1	QPX3434-Y

DETAIL NO. 11

GROUND CABLE CONNECTION, MECHANICAL

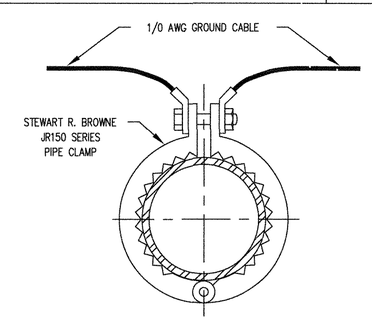

DETAIL NO. 12

PIPE GROUNDING CLAMP

NASSAU COUNTY DEPARTMENT OF HEALTH
DIVISION OF ENVIRONMENTAL HEALTH
These plans are hereby approved
SHEET 57 OF 69
See first sheet hereof for date and signature

CAUTION: IF SHEET IS LESS THAN 34"x22" USE GRAPHIC SCALE

SYM.	DESCRIPTION	DATE	APPR.
.	NASSAU COUNTY DEPT. OF HEALTH SUBMITTAL	11/9/2011	

NAVFAC

STATE OF NEW YORK – ROBERT A. STRAUSS – 088075-1 – LICENSED PROFESSIONAL ENGINEER

DEPARTMENT OF THE NAVY
NAVAL FACILITIES ENGINEERING COMMAND
NORTHEAST IPT
NAVAL FACILITIES ENGINEERING COMMAND ~ MID-ATLANTIC
NAVAL STATION - NORFOLK, VIRGINIA
AQUA NY
NASSAU COUNTY, NEW YORK
MODIFICATIONS TO WATER TREATMENT FACILITY

ELECTRICAL - GROUNDING NOTES & DETAILS

DES GESSLER | DR HORTON
REVIEWED BY GESSLER
PM/DM DDB
CHIEF ENG/ARCH GESSLER

CODE ID. NO. 80091 | SIZE D
SCALE:
MAXIMO NO. N62470-08-D-1001
JOB ORDER NO. WE-25
SPEC. NO.
CONSTR. CONTR. NO. 112G02223
NAVFAC DRAWING NO.
SHEET OF --

E-15

NOV 07 2012

57

This drawing (D7245-03) represents the latest as-built markup and replaces electrical drawing E-16.

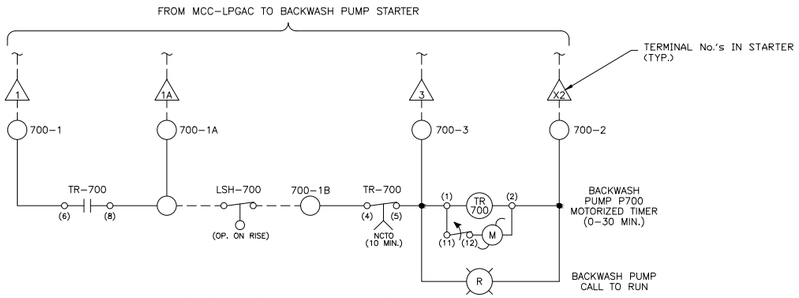

BACKWASH PUMP P700

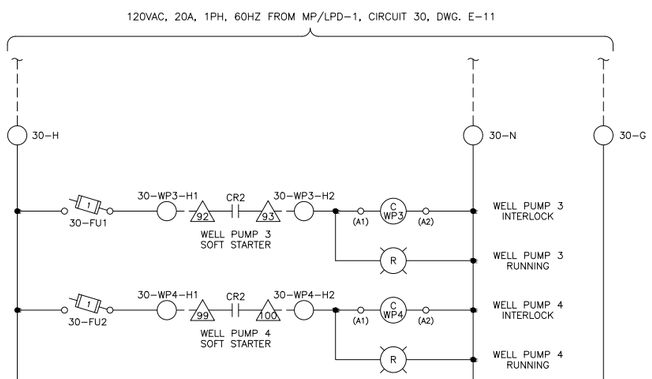

WELL PUMP 3 & 4 INTERLOCKS

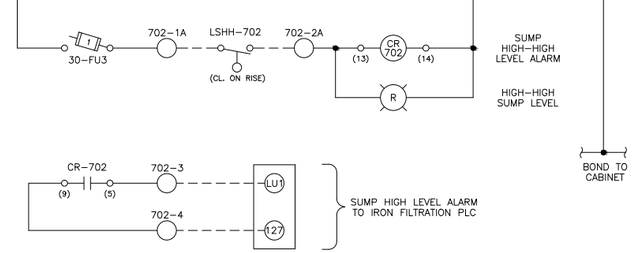

SUMP PUMP ALARM

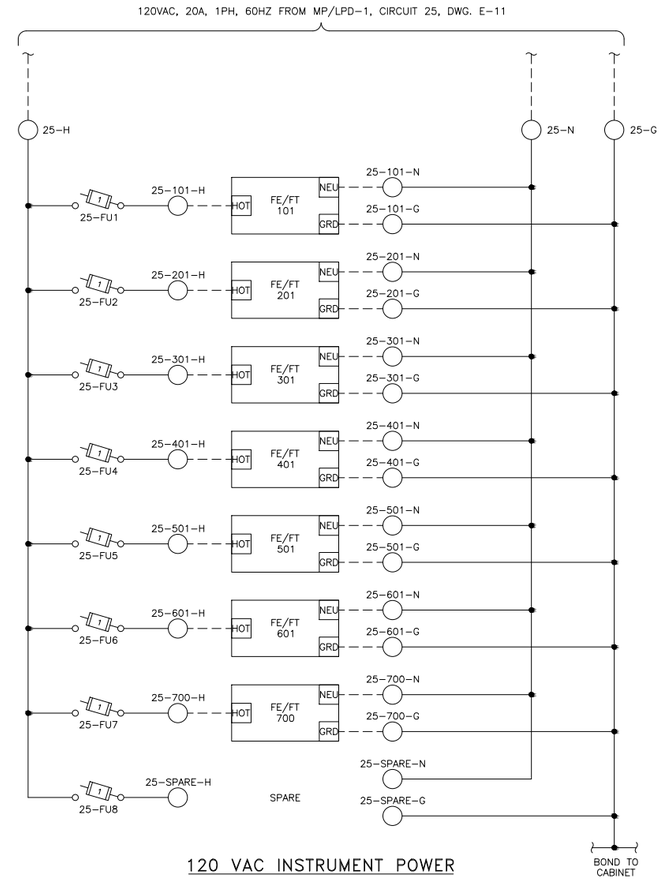

120 VAC INSTRUMENT POWER

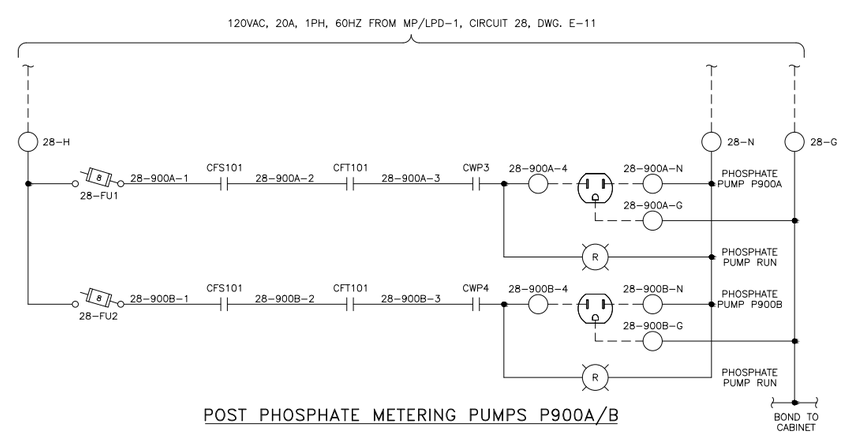

POST PHOSPHATE METERING PUMPS P900A/B

THIS DOCUMENT CONTAINS PROPRIETARY INFORMATION WITH ALL RIGHTS & TITLES RESERVED AND MAY NOT BE REPRODUCED IN WHOLE OR IN PART WITHOUT THE WRITTEN CONSENT OF EAGLE CONTROL CORP.

REFERENCE DRAWINGS
D7245-01
THRU
D7245-08

REV	DATE	DRWN	DESCRIPTION	APP'D
2	2/14	PDS	AS BUILT	
1	11/13	PDS	PER ENGINEER'S COMMENTS	

REVISIONS

EAGLE CONTROL CORP.
YAPHANK N.Y.

PROJECT: AQUA NY
MODIFICATIONS TO WATER TREATMENT FACILITY AT SEAMAN'S NECK ROAD

TITLE: MCP-LPGAC
ELEMENTARY WIRING DIAGRAM

ENGINEER:	DRAWN:	CHECKED:	PROJECT:
JZ	PDS		7245

DATE:	SCALE:	DRAWING NO:	REV:
9/12/13	NONE	D7245-03	2

This drawing (D7245-04) represents the latest as-built markup and replaces electrical drawing E-17.

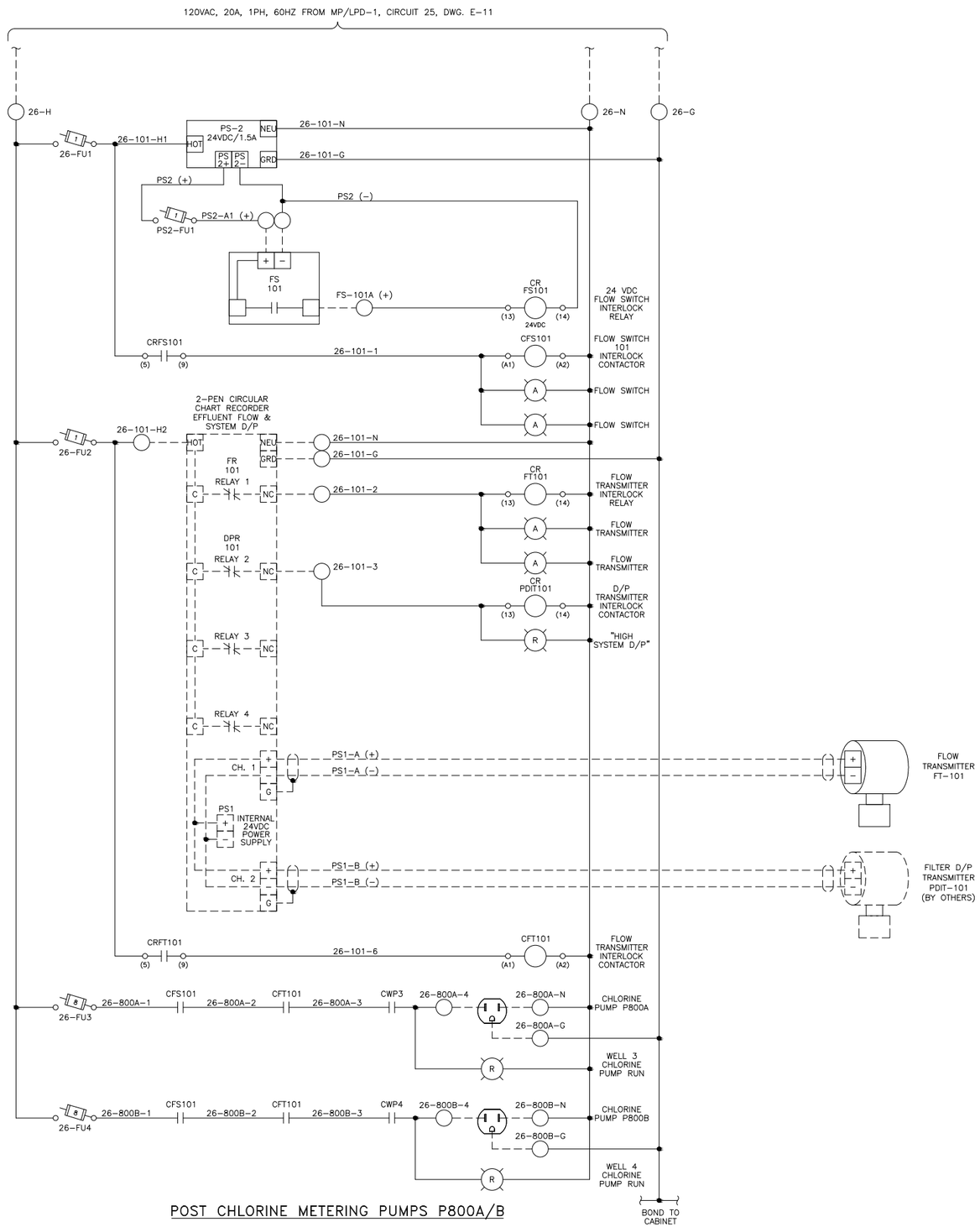

POST CHLORINE METERING PUMPS P800A/B

THIS DOCUMENT CONTAINS PROPRIETARY INFORMATION WITH ALL RIGHTS & TITLES RESERVED AND MAY NOT BE REPRODUCED IN WHOLE OR IN PART WITHOUT THE WRITTEN CONSENT OF EAGLE CONTROL CORP.

REFERENCE DRAWINGS
D7245-01 THRU D7245-08

REV	DATE	DRWN	DESCRIPTION	APP'D
2	2/14	PDS	AS BUILT	
1	11/13	PDS	ADDED PILOT LIGHTS	

REVISIONS

EAGLE CONTROL CORP.
YAPHANK N.Y.

PROJECT: AQUA NY
MODIFICATIONS TO WATER TREATMENT FACILITY AT SEAMAN'S NECK ROAD

TITLE: MCP-LPGAC
ELEMENTARY WIRING DIAGRAM

ENGINEER:	DRAWN:	CHECKED:	PROJECT:
JZ	PDS		7245

DATE:	SCALE:	DRAWING NO:	REV:
9/13/13	NONE	D7245-04	2

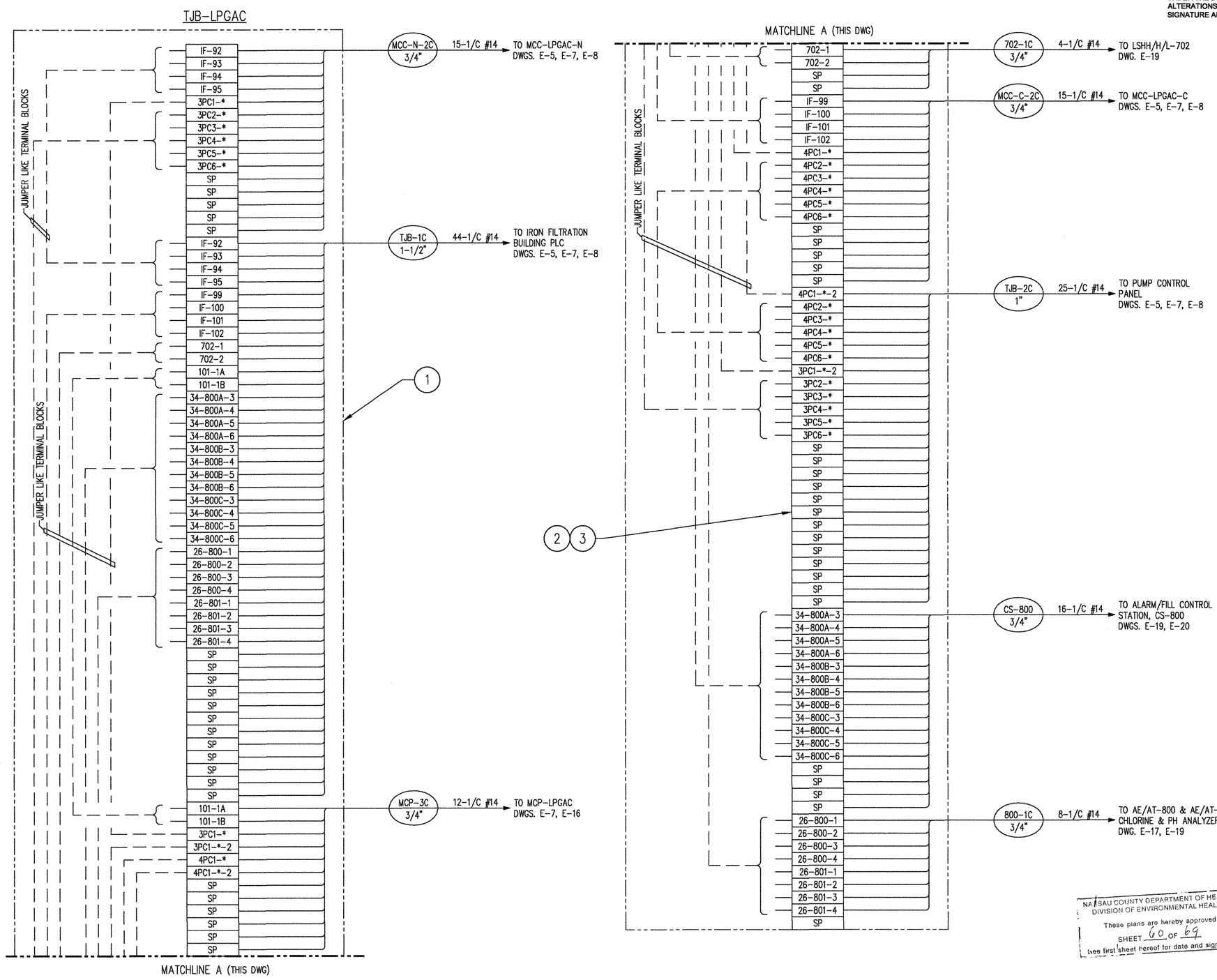

UNAUTHORIZED ALTERATION OR ADDITION TO THIS PLAN IS A VIOLATION OF SECTION 7209 OF THE NEW YORK STATE EDUCATION LAW, UNLESS THE PERSON IS ACTING UNDER THE DIRECTION OF A LICENSED PROFESSIONAL ENGINEER. ANY PLAN ALTERATIONS BY ANOTHER ENGINEER MUST BE MARKED AS SUCH, INCLUDING THE SIGNATURE AND SEAL OF THE ALTERING ENGINEER.

BILL OF MATERIAL

MK.	QTY.	DESCRIPTION
1	1	NEMA 12 ENCLOSURE WITH A BOLTED HINGED DOOR AND SUB PANEL FACTORY PAINTED, SIZED ACCORDINGLY
2	140	TERMINAL BLOCKS, 300 VAC, SCREW TERMINAL, SIZED FOR #14 WIRE W/END PLATES
3	AS REQ'D.	DIN RAIL

TJB-LPGAC

NAMEPLATE DETAIL

NOTE: TERMINAL JUNCTION BOX TJB-LPGAC SHALL BE AFFIXED WITH ENGRAVED WHITE LAMINATED PLASTIC NAMEPLATE WITH BLACK 3/8" LETTERING

REFERENCE DRAWINGS:

E-5 ELEMENTARY DIAGRAM – SHT. 2
E-7 POWER & CONTROL CONDUIT PLAN
E-8 SITE CONDUIT PLAN
E-16 MCP-LPGAC ELEMENTARY DIAGRAM – SHT. 1
E-17 MCP-LPGAC ELEMENTARY DIAGRAM – SHT. 2
E-19 INSTRUMENT & MISC. POWER

NASSAU COUNTY DEPARTMENT OF HEALTH
DIVISION OF ENVIRONMENTAL HEALTH
These plans are hereby approved
SHEET 60 OF 69
See first sheet hereof for date and signature

CAUTION: IF SHEET IS LESS THAN 34"x22" USE GRAPHIC SCALE

SYM	DESCRIPTION	DATE	APPR
1	APPROVAL SUBMISSION, REV 1	6/11/12	

NAVFAC

STATE OF NEW YORK · ROGER A. STRAUSS · 088075-1 · LICENSED PROFESSIONAL ENGINEER

6.8.12

DES GESSLER | DR HORTON
REVIEWED BY GESSLER
PM/DM
CHIEF ENG/ARCH GESSLER

DEPARTMENT OF THE NAVY
NAVAL FACILITIES ENGINEERING COMMAND
NAVAL FACILITIES ENGINEERING COMMAND ~ MID-ATLANTIC
NORTHEAST IPT
NAVAL STATION – NORFOLK, VIRGINIA
AQUA NY
NASSAU COUNTY, NEW YORK
MODIFICATIONS TO WATER TREATMENT FACILITY

ELECTRICAL - TJB-LPGAC BLOCK DIAGRAM & B.O.M.

CODE ID. NO. 80091 | SIZE D
SCALE:
MAXIMO NO. N62470-08-D-1001
JOB ORDER NO. WE-25
SPEC. NO.
CONSTR. CONTR. NO. 112G02223
NAVFAC DRAWING NO.
SHEET OF --

E-18

NOV 07 2012

60

UNAUTHORIZED ALTERATION OR ADDITION TO THIS PLAN IS A VIOLATION OF SECTION 7209 OF THE NEW YORK STATE EDUCATION LAW, UNLESS THE PERSON IS ACTING UNDER THE DIRECTION OF A LICENSED PROFESSIONAL ENGINEER. ANY PLAN ALTERATIONS BY ANOTHER ENGINEER MUST BE MARKED AS SUCH, INCLUDING THE SIGNATURE AND SEAL OF THE ALTERING ENGINEER.

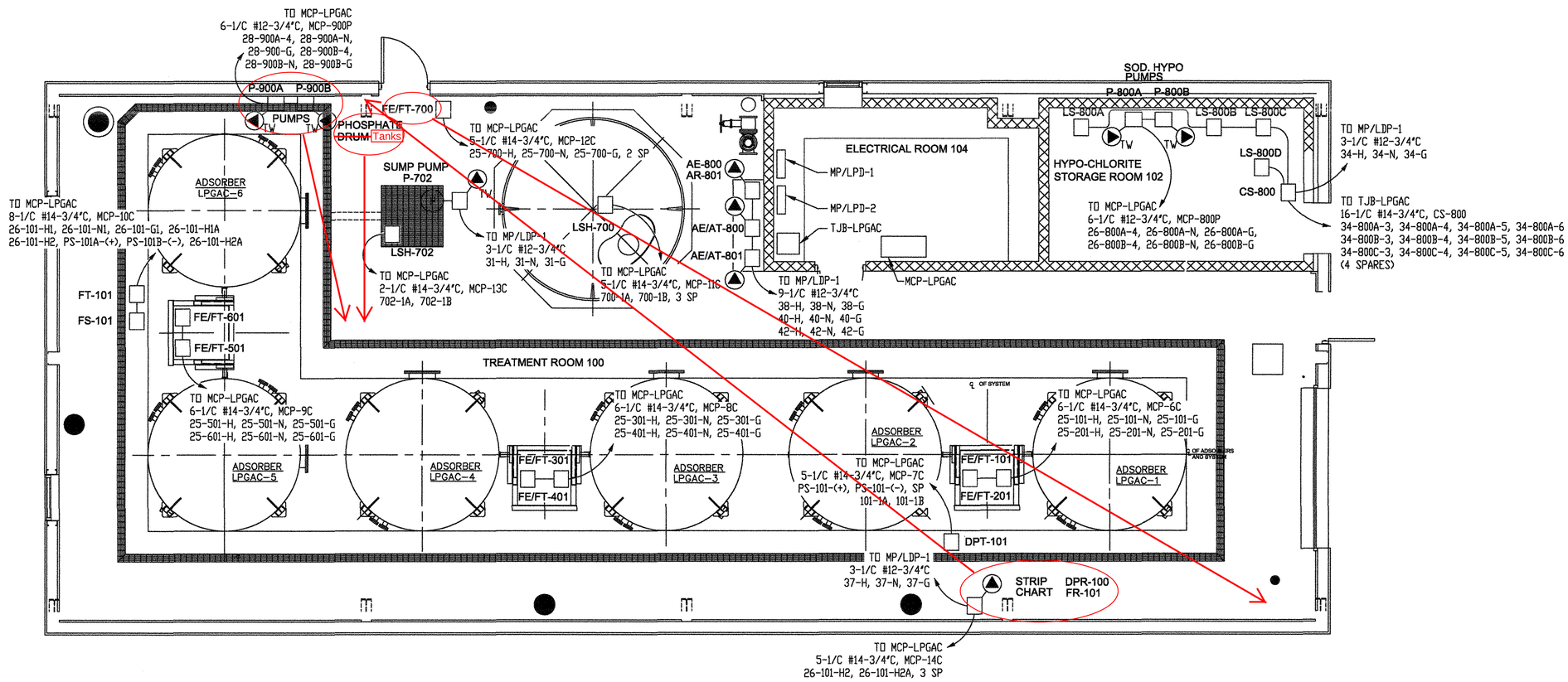

PLAN - LPGAC TREATMENT BUILDING

LEGEND:

TW — SPECIAL PURPOSE OUTLET CONSISTING OF A GALVANIZED BOX, COVER AND A 20A HEAVY DUTY RECEPTACLE, BLACK IN COLOR UNLESS NOTED OTHERWISE. 'TW' DENOTES TWIST LOCK. NOTE: THE CHLORINE AND PHOSPHATE METERING PUMPS SHALL HAVE COLOR MATCHING PLUGS AND RECEPTACLES AS TO ELIMINATE CIRCUIT CROSSING. CHLORINE METERING PUMP P800A AND PHOSPHATE METERING PUMP P900A COLOR MATCHING PLUGS AND RECEPTACLES SHALL BE RED. CHLORINE METERING PUMP P800B AND PHOSPHATE METERING PUMP P900B COLOR MATCHING PLUGS AND RECEPTACLES SHALL BE YELLOW.

NASSAU COUNTY DEPARTMENT OF HEALTH
DIVISION OF ENVIRONMENTAL HEALTH
These plans are hereby approved
SHEET 61 OF 69
See first sheet hereof for date and signature

REFERENCE DRAWINGS:

E-4 ELEMENTARY DIAGRAMS - SHT. 1
E-11 PANEL RISER DIAGRAMS
E-16 MCP-LPGAC ELEMENTARY DIAGRAM - SHT. 1
E-17 MCP-LPGAC ELEMENTARY DIAGRAM - SHT. 2

CAUTION: IF SHEET IS LESS THAN 34"x22" USE GRAPHIC SCALE

1	APPROVAL SUBMISSION, REV 1	9/21/12				
	DESCRIPTION	DATE	APPR			

DEPARTMENT OF THE NAVY
NAVAL FACILITIES ENGINEERING COMMAND ~ MID-ATLANTIC
NORTHEAST IPT — NAVAL STATION - NORFOLK, VIRGINIA
AQUA NY — NASSAU COUNTY, NEW YORK

MODIFICATIONS TO WATER TREATMENT FACILITY

ELECTRICAL - INSTRUMENT & MISC. POWER

DES GESSLER | DR HORTON
REVIEWED BY GESSLER
PM/DM
CHIEF ENG/ARCH GESSLER

CODE ID. NO. 80091 | SIZE D
SCALE:
MAXIMO NO. N62470-08-D-1001
JOB ORDER NO. WE-25
SPEC. NO.
CONSTR. CONTR. NO. 112G02223
NAVFAC DRAWING NO.
SHEET OF --

E-19

NOV 07 2012

61

This drawing (D7245-06) represents the latest as-built markup and replaces electrical drawing E-20.

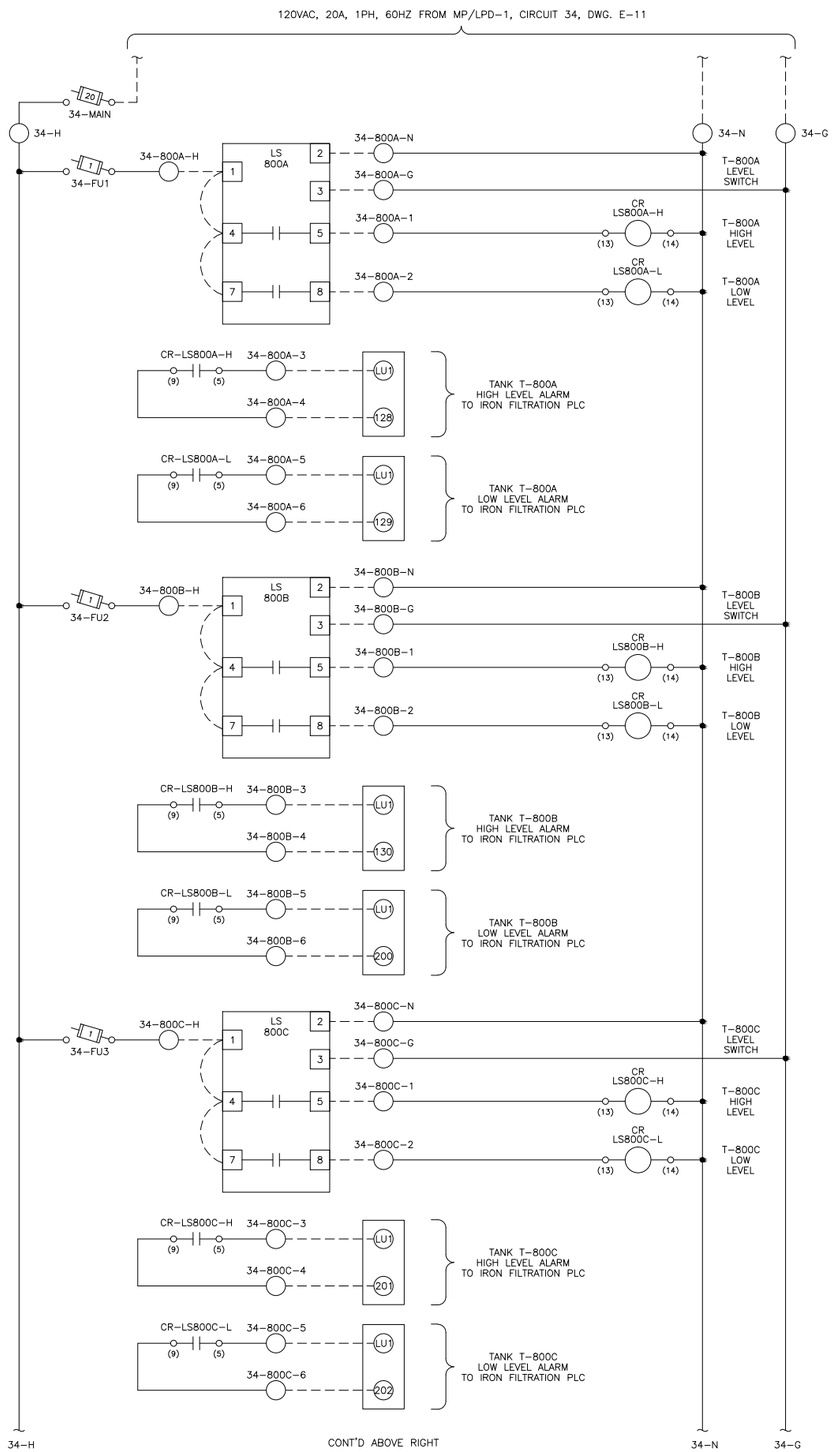

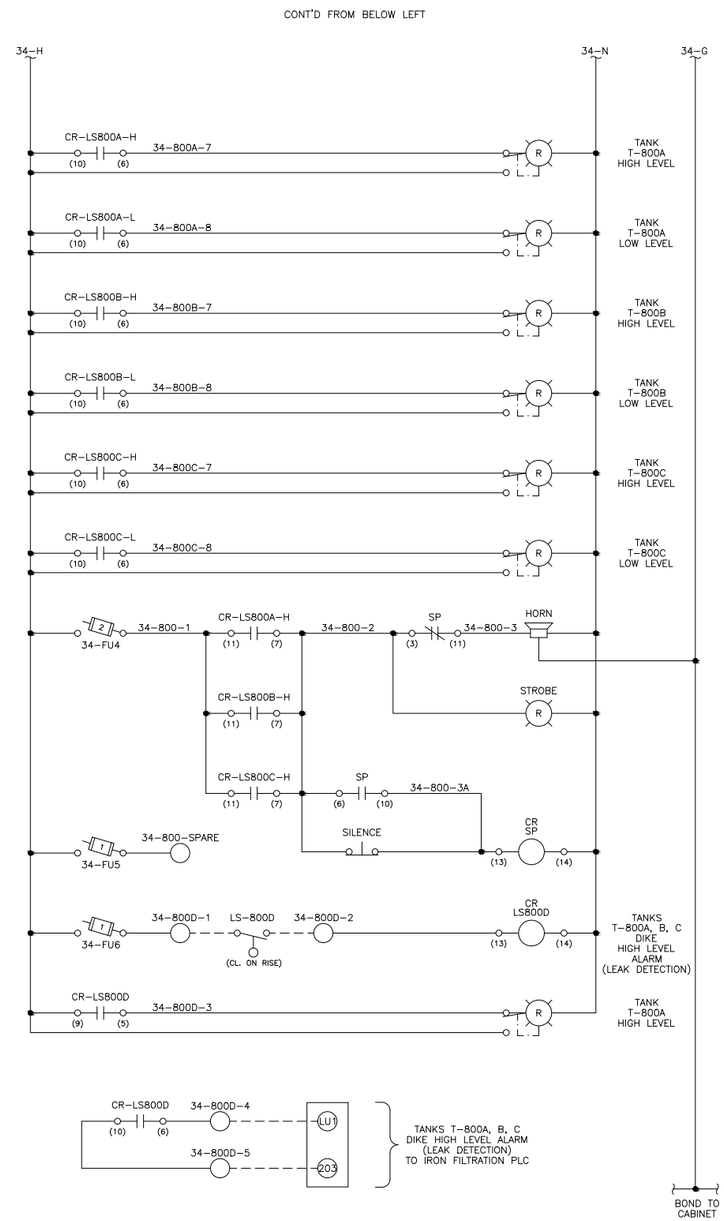

THIS DOCUMENT CONTAINS PROPRIETARY INFORMATION WITH ALL RIGHTS & TITLES RESERVED AND MAY NOT BE REPRODUCED IN WHOLE OR IN PART WITHOUT THE WRITTEN CONSENT OF EAGLE CONTROL CORP.

REFERENCE DRAWINGS
D7245-01 THRU D7245-08

REV	DATE	DRWN	DESCRIPTION	APP'D
2	2/14	PDS	AS BUILT	
1	12/13	PDS	PER ENGINEER'S COMMENTS	

REVISIONS

EAGLE CONTROL CORP.
YAPHANK N.Y.

PROJECT: AQUA NY
MODIFICATIONS TO WATER TREATMENT FACILITY AT SEAMAN'S NECK ROAD

TITLE: CS-800 ALARM/FILL CONTROL PANEL ELEMENTARY WIRING DIAGRAM

ENGINEER:	DRAWN:	CHECKED:	PROJECT:
JZ	PDS		7245

DATE:	SCALE:	DRAWING NO:	REV:
9/19/13	NONE	D7245-06	2

This drawing (D7245-08) shows wiring that interconnects with the iron filtration building.

GRANULATED ACTIVATED CARBON BUILDING

2-PEN CIRCULAR CHART RECORDER
DPR-100

26-101-H2 — L
26-N — N
26-G — G

CHANNEL 1: + / − / G
PS1-A (+)
PS1-A (−)

FLOW TRANSMITTER FT-101

26-101-2 — C, NC — RELAY 1
26-101-3 — C, NC — RELAY 2

CHANNEL 2: + / − / G
PS1-B (+)
PS1-B (−)

FILTER D/P TRANSMITTER PDIT-101 (BY OTHERS)

PS2-A1(+) BROWN
PS2(−) BLUE
FS-101A(+) BLACK

EFFLUENT FLOW SWITCH FS-101

700-1A
700-1B
WASTE TANK HIGH LEVEL FLOAT SWITCH LSH-700 (OPEN ON HIGH LEVEL)

702-1A
702-2A
SUMP HIGH LEVEL FLOAT SWITCH (N.O.)

25-101-H	HOT	FE/FT 101
25-101-N	NEU	
25-101-G	GRD	
25-201-H	HOT	FE/FT 201
25-201-N	NEU	
25-201-G	GRD	
25-301-H	HOT	FE/FT 301
25-301-N	NEU	
25-301-G	GRD	
25-401-H	HOT	FE/FT 401
25-401-N	NEU	
25-401-G	GRD	
25-501-H	HOT	FE/FT 501
25-501-N	NEU	
25-501-G	GRD	
25-601-H	HOT	FE/FT 601
25-601-N	NEU	
25-601-G	GRD	
25-700-H	HOT	FE/FT 700
25-700-N	NEU	
25-700-G	GRD	

FROM MP/LDP-1 120V-60 HZ CKT. 38

TO FILTER CONTROL PANEL AND WELL CONTROL PANEL

L, N, G

pH/CL2 ANALYZER/ CONTROLLER

MCP-LPGAC

LPD-1 CKT. 25 — 25-H, 25-N, 25-G — TO FLOW METERS AT EACH CARBON FILTER
LPD-1 CKT. 26 — 26-H, 26-N, 26-G — TO IRON FILTER CONTROL PANEL
LPD-1 CKT. 28 — 28-H, 28-N, 28-G — TO CHEMICAL PUMP RECEPTACLES
LPD-1 CKT. 30 — 30-H, 30-N, 30-G — TO MCC MOTOR STARTERS

CHLORINE PUMP RECEPTACLE P900A
26-800A-4, 26-800A-N, 26-800A-G

CHLORINE PUMP RECEPTACLE P900B
26-800B-4, 26-800B-N, 26-800B-G

PHOSPHATE PUMP RECEPTACLE P900A
28-900A-4, 28-900A-N, 28-900A-G

PHOSPHATE PUMP RECEPTACLE P900B
28-900B-4, 28-900B-N, 28-900B-G

WELL 3 STARTER
30-WP3-H1 — 92
30-WP3-H2 — 93

WELL 4 STARTER
30-WP4-H1 — 99
30-WP4-H2 — 100

BOOSTER PUMP STARTER
700-1 — 1
700-1A — 1A
700-3 — 3
700-2 — X2

LS-800A: 1 34-800A-H, 2 34-800A-N, 3 34-800A-G, 4, 5 34-800A-1, 7, 8 34-800A-2
LS-800B: 1 34-800B-H, 2 34-800B-N, 3 34-800B-G, 4, 5 34-800B-1, 7, 8 34-800B-2
LS-800C: 1 34-800C-H, 2 34-800C-N, 3 34-800C-G, 4, 5 34-800C-1, 7, 8 34-800C-2

LS-800D FLOAT SWITCH (CL. ON RISE): 34-800D-1, 34-800D-2

ALARM/FILL PANEL CS-800
34-H, 34-N, 34-G — FROM MP LPD-1 120V-60HZ CKT. 34
34-800A3, 34-800A4, 34-800A5, 34-800A6, 34-800B3, 34-800B4, 34-800B5, 34-800B6, 34-800C3, 34-800C4, 34-800C5, 34-800C6, 34-800D4, 34-800D5
LU-1, 128, 129, 130, 200, 201, 202, 203

TO FILTER CONTROL PANEL
TO WELL CONTROL PANEL

IRON FILTRATION CONTROL ROOM

IRON FILTRATION CONTROL PANEL (EXISTING)

702-3	LU1	LU1	34-800A-3
101-1A	LU1	128	34-800A-4
26-801-1	LU1	129	34-800A-6
26-801-3	LU1	130	34-800B-4
26-800-1	LU1	200	34-800B-6
26-800-3	LU1	201	34-800C-4
7	LU1	202	34-800C-6
8	LU1	203	34-800D-5
7	73		
8	74		
26-801-2	122		
26-801-4	123		
26-800-2	124		
26-800-4	125		
101-1B	126		
702-4	127		

*REFER TO EXISTING CONTROL DRAWINGS D6280-01 THROUGH D6280-11
SEE MODIFICATIONS TO DRAWINGS D6280-04 AND D6280-05 FOR THIS CONTRACT

TREATMENT BUILDING

WELL CONTROL PANEL (EXISTING)

3PC1-1	L1
4PC1-1	L1
WELL #4 STR. 5	L1
WELL #3 STR. 5	L1
WELL #3 STR. 6	26
WELL #3 STR. 95	70
WELL #3 STR. 3	71
3PC1-2	11
WELL #4 STR. 702	75
WELL #4 STR. 3	76
4PC1-2	94
WELL #4 STR. 6	108

*REFER TO EXISTING CONTROL DRAWINGS D5471-52, D5471-53 AND D5471-54

SCADA SYSTEM RTU (EXISTING)

3/4" CONDUIT WITH CAT-5E COMMUNICATION CABLE

*REFER TO EXISTING CONTROL DRAWINGS D7001-01, D7001-02 AND D7001-03

THIS DOCUMENT CONTAINS PROPRIETARY INFORMATION WITH ALL RIGHTS & TITLES RESERVED AND MAY NOT BE REPRODUCED IN WHOLE OR IN PART WITHOUT THE WRITTEN CONSENT OF EAGLE CONTROL CORP.

REFERENCE DRAWINGS
D7245-01 THRU D7245-08

REV	DATE	DRWN	DESCRIPTION	APP'D
1	2/14	PDS	AS BUILT	

REVISIONS

EAGLE CONTROL CORP.
YAPHANK N.Y.

PROJECT: AQUA NY
MODIFICATIONS TO WATER TREATMENT FACILITY AT SEAMAN'S NECK ROAD

TITLE: MCP-LPGAC
INTERCONNECTING WIRING DIAGRAM

ENGINEER:	DRAWN:	CHECKED:	PROJECT:
JZ	PDS		7245

DATE:	SCALE:	DRAWING NO:	REV:
9/23/13	NONE	D7245-08	1

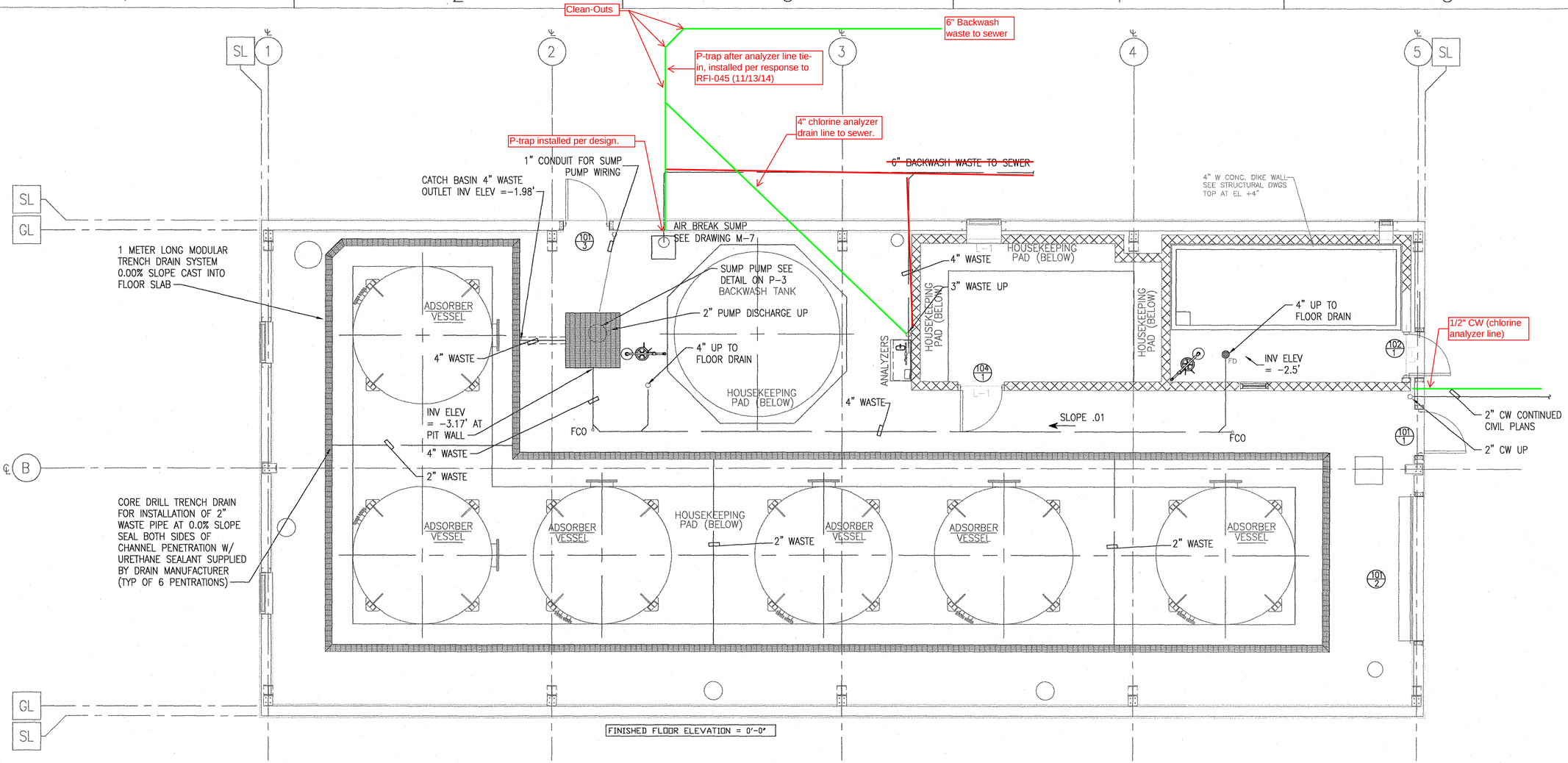

1 **Underslab Floor Plan**
1/4" = 1'-0"

NASSAU COUNTY DEPARTMENT OF HEALTH
DIVISION OF ENVIRONMENTAL HEALTH
These plans are hereby approved
SHEET 63 OF 69
See first sheet hereof for date and signature

UNAUTHORIZED ALTERATION OR ADDITION TO THIS PLAN IS A VIOLATION OF SECTION 7209 OF THE NEW YORK STATE EDUCATION LAW, UNLESS THE PERSON IS ACTING UNDER THE DIRECTION OF A LICENSED PROFESSIONAL ENGINEER. ANY PLAN ALTERATIONS BY ANOTHER ENGINEER MUST BE MARKED AS SUCH, INCLUDING THE SIGNATURE AND SEAL OF THE ALTERING ENGINEER.

CAUTION: IF SHEET IS LESS THAN 34"x22" USE GRAPHIC SCALE

SYM	DESCRIPTION	DATE	APPR
1	APPROVAL SUBMISSION	3/30/12	

NAVFAC

STATE OF NEW YORK
JEFFREY L. McKENNA
085598
LICENSED PROFESSIONAL ENGINEER

DES GPD	DR MAK
REVIEWED BY	DCG
PM/DM	HKM
CHIEF ENG/ARCH	HKM

DEPARTMENT OF THE NAVY
NAVAL FACILITIES ENGINEERING COMMAND
NORTHEAST IPT
NAVAL FACILITIES ENGINEERING COMMAND ~ MID-ATLANTIC
NAVAL STATION - NORFOLK, VIRGINIA
AQUA NY
NASSAU COUNTY, NEW YORK
MODIFICATIONS TO WATER TREATMENT FACILITY

UNDERSLAB FLOOR PLAN

CODE ID. NO. 80091	SIZE D
SCALE:	1/4"=1'-0"
MAXIMO NO. N62470-08-D-1001	
JOB ORDER NO. WE-25	
SPEC. NO.	
CONSTR. CONTR. NO. 112G02223	
NAVFAC DRAWING NO.	
SHEET	OF — —

P-1

63 NOV 07 2012

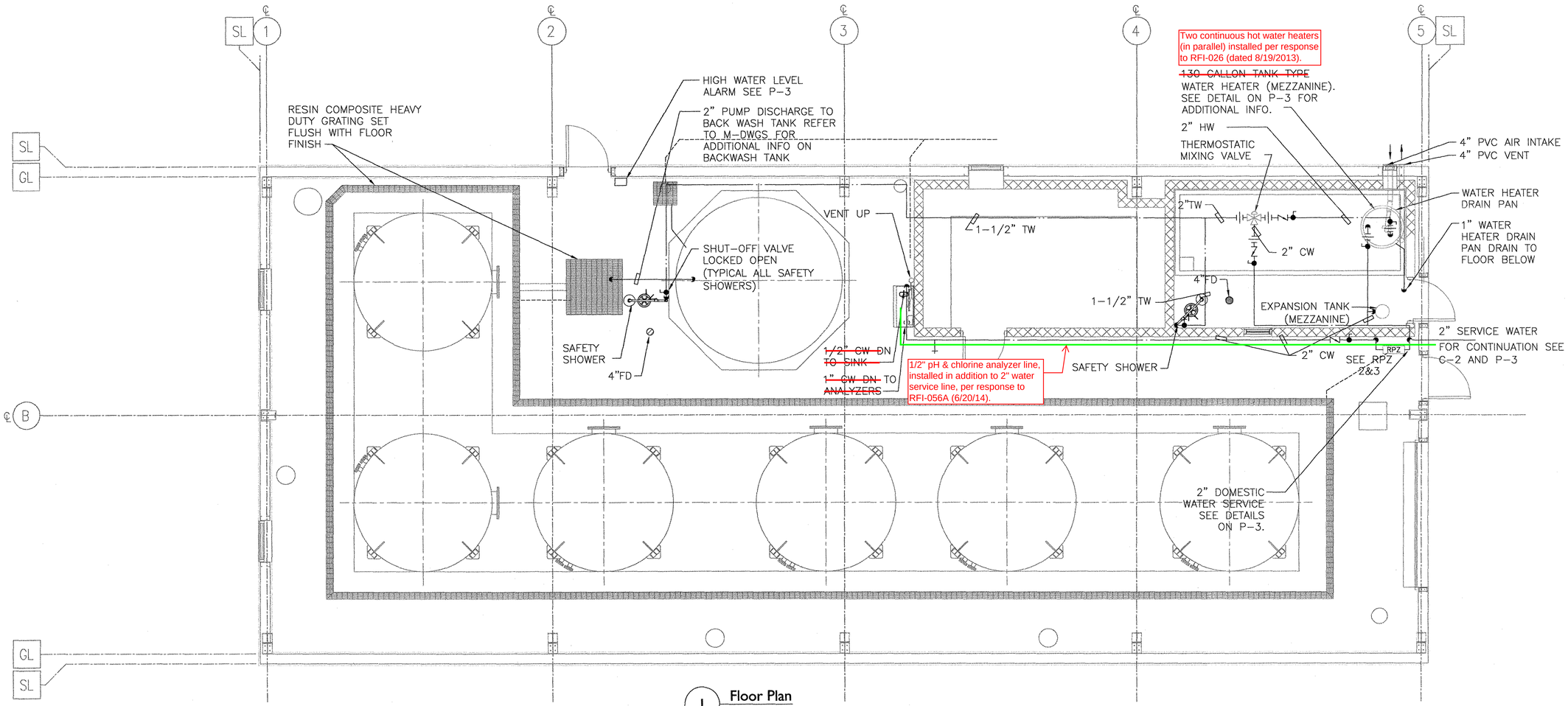

1 Floor Plan
1/4" = 1'-0"

BACKFLOW PREVENTION NOTES:

1. INSTALLATIONS SHALL BE IN ACCORDANCE WITH ALL APPLICABLE NASSAU COUNTY DEPARTMENT OF HEALTH SERVICES, AND NEW YORK STATE HEALTH DEPARTMENT REQUIREMENTS.
2. DEVICES MUST BE PROTECTED FROM FREEZING AND FLOODING.
3. PIPING TO BE UNBRANCHED AND UNRESTRICTED FROM THE SUPPLY MAIN TO DEVICE, EXCEPT FOR METER. ALL CONNECTIONS ON THE DOMESTIC WATER SERVICE SHALL BE DOWNSTREAM FROM THE BACKFLOW PREVENTION DEVICE. BYPASSING OF A BACKFLOW PREVENTION DEVICE IS A VIOLATION OF NEW YORK STATE HEALTH DEPARTMENT RULES AND REGULATIONS.
4. DEVICES MUST BE TESTED AFTER INSTALLATION AND AT LEAST ANNUALLY BY A NYSHD CERTIFIED BACKFLOW PREVENTION DEVICE TESTER.
5. MAINTAIN REQUIRED CLEARANCES AROUND BACKFLOW PREVENTION DEVICES AS PER NASSAU COUNTY DEPARTMENT SERVICES OF HEALTH.
6. TEST COCKS SHALL BE POSITIONED TO FACILITATE TESTING.
7. DRAINAGE TO BE POSITIVE WITH EFFLUENT DISCHARGE VISIBLE.

2"Ø REDUCED PRESSURE ZONE ASSEMBLY (RPZ):

AS APPROVED BY UNIVERSITY OF SOUTHERN CALIFORNIA FOUNDATION FOR CROSS-CONNECTION CONTROL AND HYDRAULIC RESEARCH (FCCCHR). THE RPZ MUST FIT IN THE PROVIDED AREA, AND MEET NASSAU COUNTY CLEARANCE REQUIREMENTS.

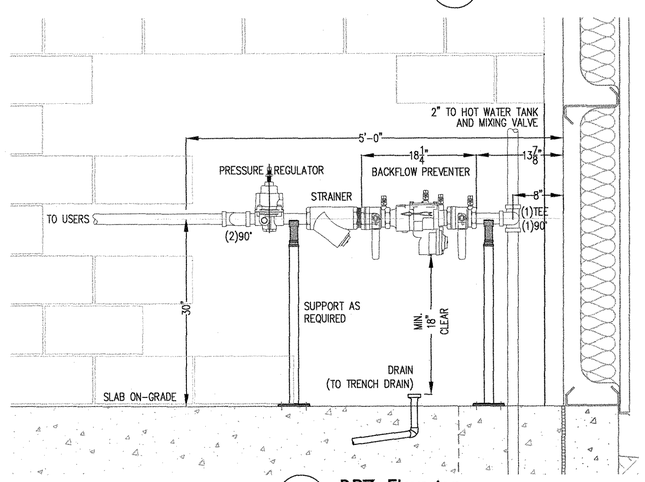

2 RPZ Elevation
1" = 1'-0"

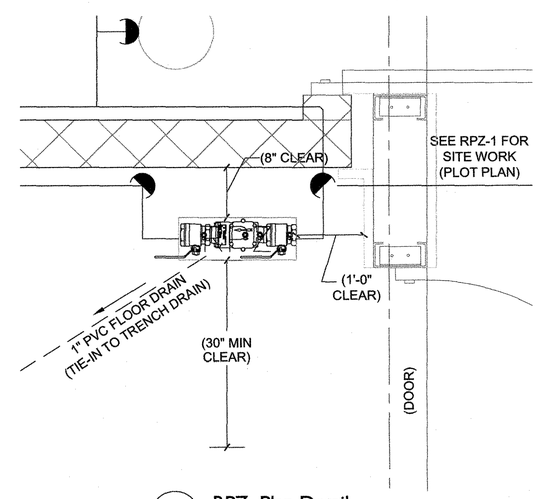

3 RPZ Plan Detail
1" = 1'-0"

NASSAU COUNTY DEPARTMENT OF HEALTH
DIVISION OF ENVIRONMENTAL HEALTH
These plans are hereby approved
SHEET 64 OF 69
See first sheet hereof for date and signature

UNAUTHORIZED ALTERATION OR ADDITION TO THIS PLAN IS A VIOLATION OF SECTION 7209 OF THE NEW YORK STATE EDUCATION LAW, UNLESS THE PERSON IS ACTING UNDER THE DIRECTION OF A LICENSED PROFESSIONAL ENGINEER. ANY PLAN ALTERATIONS BY ANOTHER ENGINEER MUST BE MARKED AS SUCH, INCLUDING THE SIGNATURE AND SEAL OF THE ALTERING ENGINEER.

CAUTION: IF SHEET IS LESS THAN 34"x22" USE GRAPHIC SCALE

1	APPROVAL SUBMISSION, REV 1	6/11/12			
	DESCRIPTION	DATE	APPR		

NAVFAC

STATE OF NEW YORK · JEFFREY L. McKENNA · 085598 · LICENSED PROFESSIONAL ENGINEER

DES	GPD	DR	MAK
REVIEWED BY		DCG	
PM/DM		HKM	
CHIEF ENG/ARCH		HKM	

DEPARTMENT OF THE NAVY
NAVAL FACILITIES ENGINEERING COMMAND
NORTHEAST IPT
AQUA NY

NAVAL FACILITIES ENGINEERING COMMAND ~ MID-ATLANTIC
NAVAL STATION - NORFOLK, VIRGINIA

NASSAU COUNTY, NEW YORK

MODIFICATIONS TO WATER TREATMENT FACILITY

FLOOR PLAN

CODE ID. NO. 80091	SIZE D
SCALE:	1/4"=1'-0"
MAXIMO NO. N62470-08-D-1001	
JOB ORDER NO. WE-25	
SPEC. NO.	
CONSTR. CONTR. NO.	112G02223
NAVFAC DRAWING NO.	DDD
SHEET	OF --
	P-2

64

NOV 07 2012

PLUMBING LEGEND LINETYPES	
CW	COLD WATER
HW	HOT WATER
TW	TEMPERED WATER
SAN	SANITARY
V	VENT

PLUMBING LEGEND SYMBOLS	
	FLOOR DRAIN
BFP	BACKFLOW PREVENTER
	BALL VALVE
	BRANCH-BOTTOM CONNECTION
	BRANCH-TOP CONNECTION
	PIPE CAP
	CHECK VALVE
	CIRCULATING PUMP
	CLEANOUT PLUG
	CONNECT TO EXISTING
	FLOW DIRECTION
	REMOVE TO THIS POINT
	DOUBLE CHECK VALVE ASSEMBLY
	FLOOR CLEANOUT
	HOSE BIBB
	NON FREEZE WALL HYDRANT
5'-0"	NOT TO SCALE
	PIPE RISING UP
	PIPE TURNING DOWN
	PRESSURE GAUGE
	PRESSURE RELIEF VAVLE
	REDUCE PRESSURE BACKFLOW PREVENTER ASSEMBLY
	SLOPE ARROW
SLOPE @ .01	SLOPE @ 1/8"/FT
SLOPE @ .02	SLOPE @ 1/4"/FT
	THERMOMETER
	TRAP
	TEMPERATURE AND PRESSURE RELIEF VALVE
	THERMAL MIXING VALVE
	UNION
	VALVE IN DROP
	WALL CLEANOUT
	WALL SLEEVE
	WATER FLOW SWITCH
PN	PLUMBING NOTES

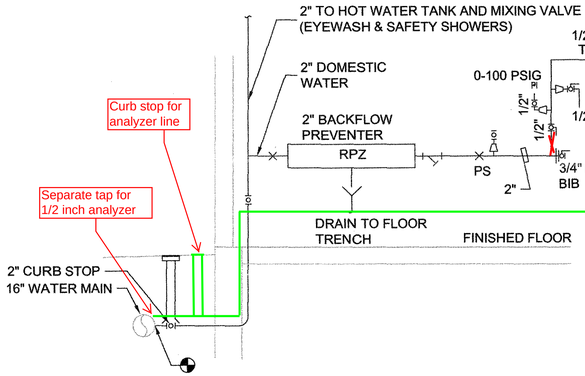

ELEVATION POTABLE WATER

NOT TO SCALE

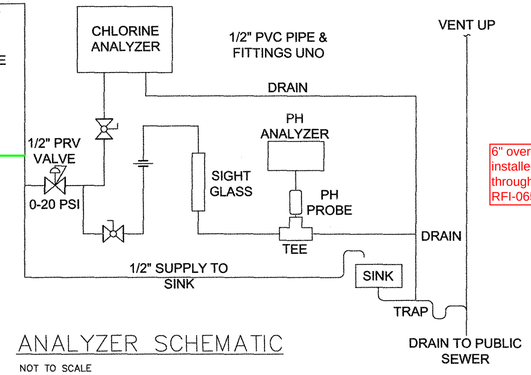

ANALYZER SCHEMATIC

NOT TO SCALE

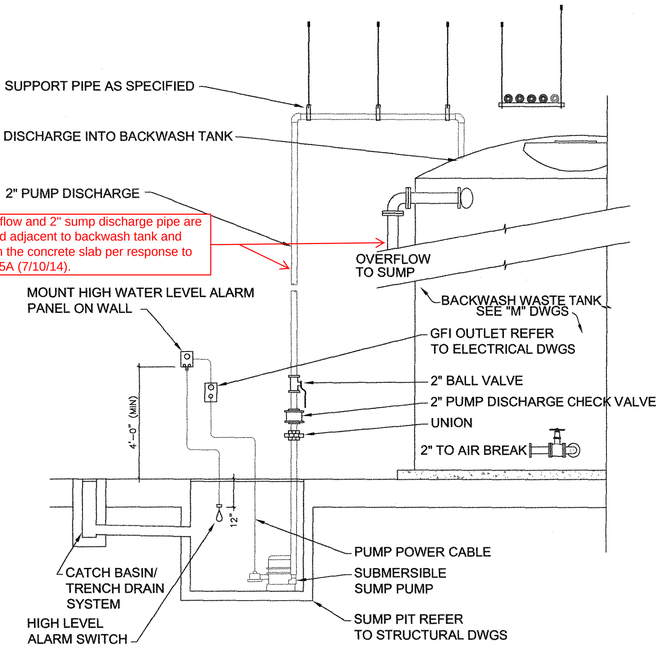

SUMP PUMP DETAIL

NOT TO SCALE

Two continuous hot water heaters (in parallel) installed per response to RFI-026 (dated 8/19/2013).

NOTE:
INSULATE ALL COLD WATER AND HOT WATER PIPING

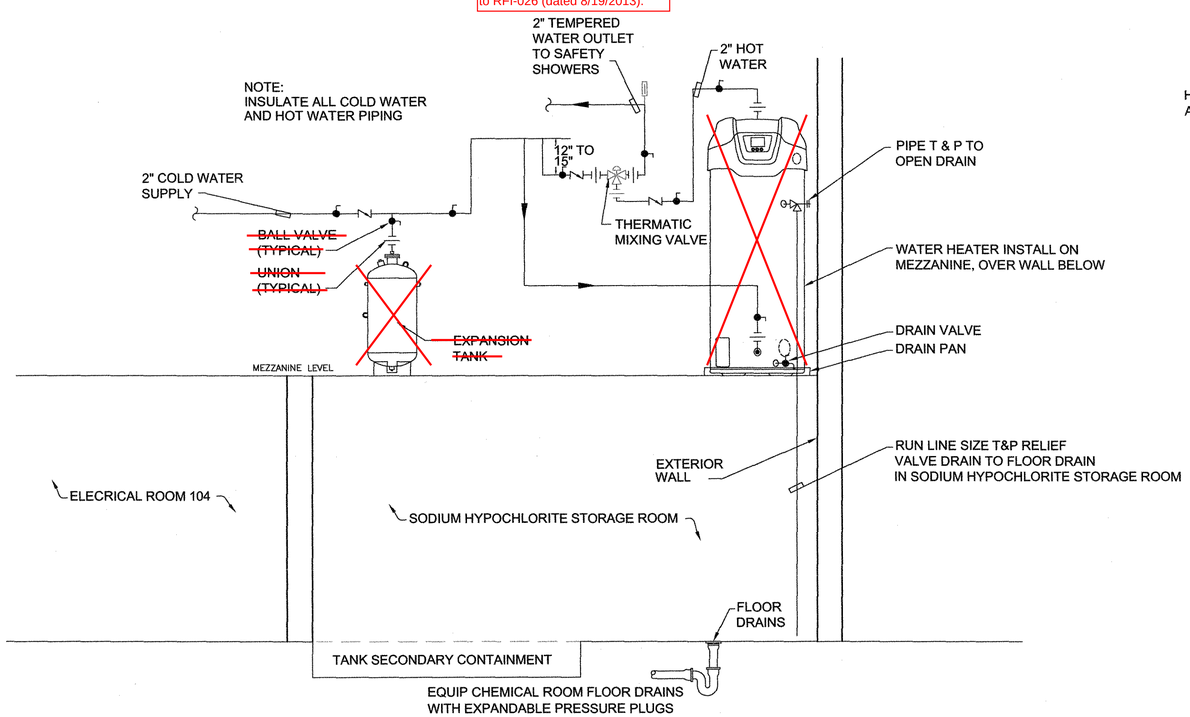

WATER HEATER SCHEMATIC

NOT TO SCALE

NASSAU COUNTY DEPARTMENT OF HEALTH
DIVISION OF ENVIRONMENTAL HEALTH
These plans are hereby approved
SHEET 65 OF 69
See first sheet hereof for date and signature

UNAUTHORIZED ALTERATION OR ADDITION TO THIS PLAN IS A VIOLATION OF SECTION 7209 OF THE NEW YORK STATE EDUCATION LAW, UNLESS THE PERSON IS ACTING UNDER THE DIRECTION OF A LICENSED PROFESSIONAL ENGINEER. ANY PLAN ALTERATIONS BY ANOTHER ENGINEER MUST BE MARKED AS SUCH, INCLUDING THE SIGNATURE AND SEAL OF THE ALTERING ENGINEER.

CAUTION: IF SHEET IS LESS THAN 34"x22" USE GRAPHIC SCALE

REV	DATE	DESCRIPTION	APP
1	6/11/12	APPROVAL SUBMISSION, REV 1	

NAVFAC

STATE OF NEW YORK · JEFFREY L. McKENNA · 085598 · LICENSED PROFESSIONAL ENGINEER

DES	GPD	DR	MAK
REVIEWED BY		DCG	
PM/DM		P-3	
CHIEF ENG/ARCH		HKM	

DEPARTMENT OF THE NAVY
NAVAL FACILITIES ENGINEERING COMMAND
NORTHEAST PL
AQUA NY

NAVAL FACILITIES ENGINEERING COMMAND ~ MID-ATLANTIC
NAVAL STATION - NORFOLK, VIRGINIA

NASSAU COUNTY, NEW YORK

MODIFICATIONS TO WATER TREATMENT FACILITY

DETAILS

CODE ID. NO. 80091	SIZE D
SCALE:	NOT TO SCALE
MAXIMO NO. N62470-08-D-1001	
JOB ORDER NO. WE-25	
SPEC. NO.	
CONSTR. CONTR. NO.	112G02223
NAVFAC DRAWING NO.	
SHEET	OF --

P-3

65

NOV 07 2012

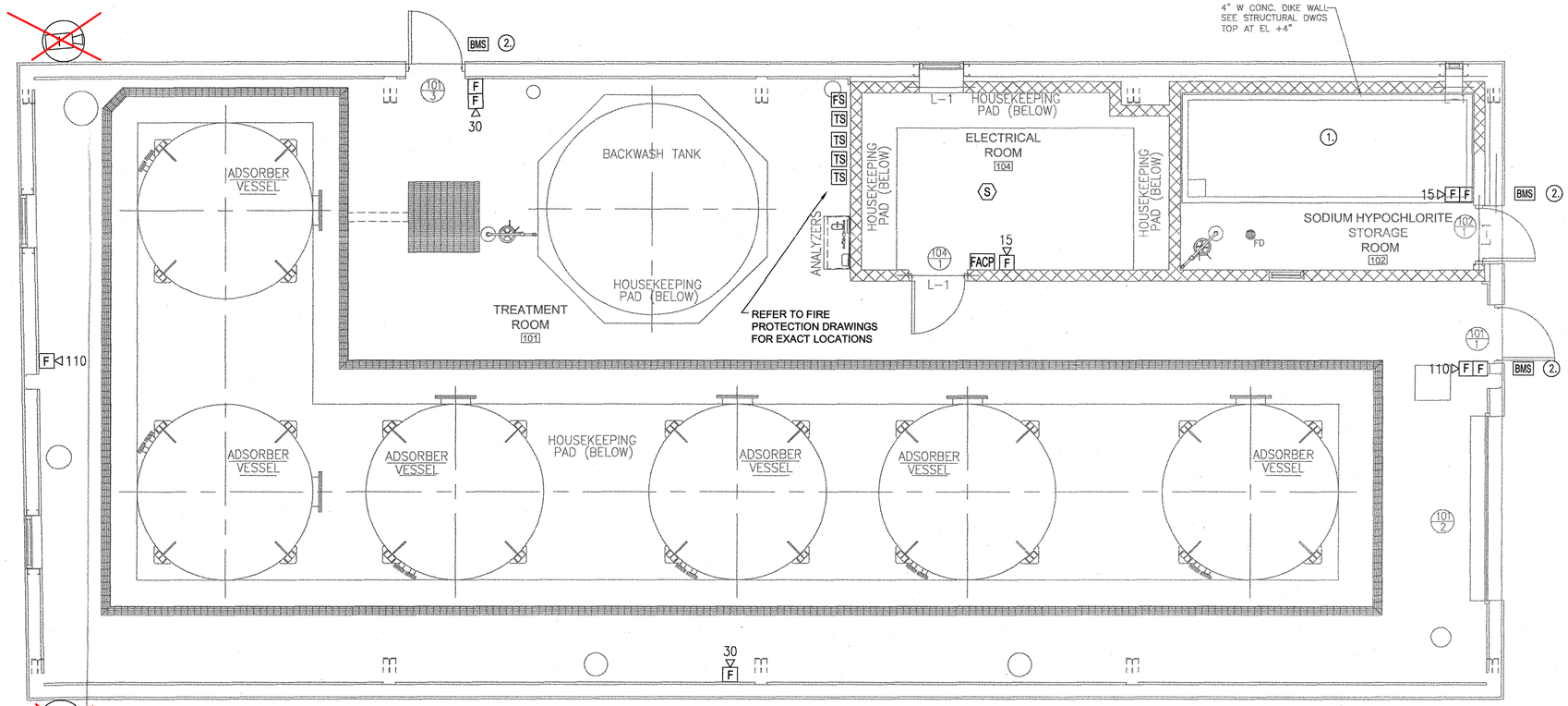

1 Floor Plan
1/8" = 1'-0"

PLAN LEGEND

FACP	FIRE ALARM CONTROL PANEL
F	MANUAL PULL STATION
F ◁##	WALL MOUNTED FIRE ALARM HORN/STROBE (## INDICATES CANDELA RATING)
S	CEILING MOUNTED SMOKE DETECTOR
FS	SPRINKLER WATER FLOW SWITCH
TS	SPRINKLER VALVE TAMPER SWITCH
#	VIDEO SURVEILLANCE CAMERA, PTZ TYPE (# INDICATES CAMERA NUMBER)
BMS	SURFACE MOUNT BALANCED MAGNETIUC SWITCH WITH 1 PAIR 20 AWG WIRE BACK TO ELECTRICAL ROOM. BASE SCADA SYSTEM WILL BE BY OTHERS.

NOTES:
1. PROVIDE CORROSION RESISTANT CONDUIT, BOXES AND FITTINGS FOR DEVICES WITHIN THIS LOCATION.
2. PROVIDE CONDUIT FOR BMS SWITCHES BACK TO ELECTRICAL ROOM.

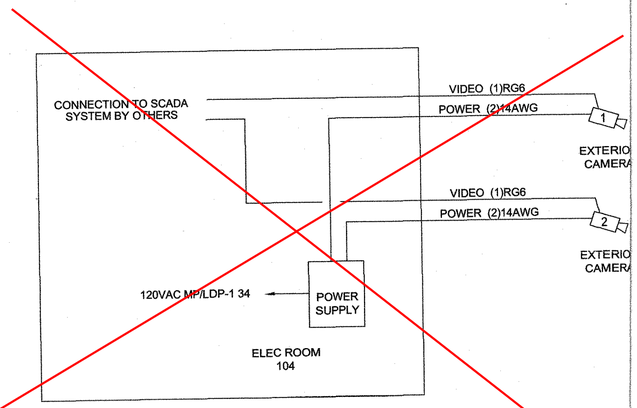

No video cameras installed (per agreement between Navy and NYAW on 8/21/2014).

3 ~~Video Camera Riser~~
~~No Scale~~

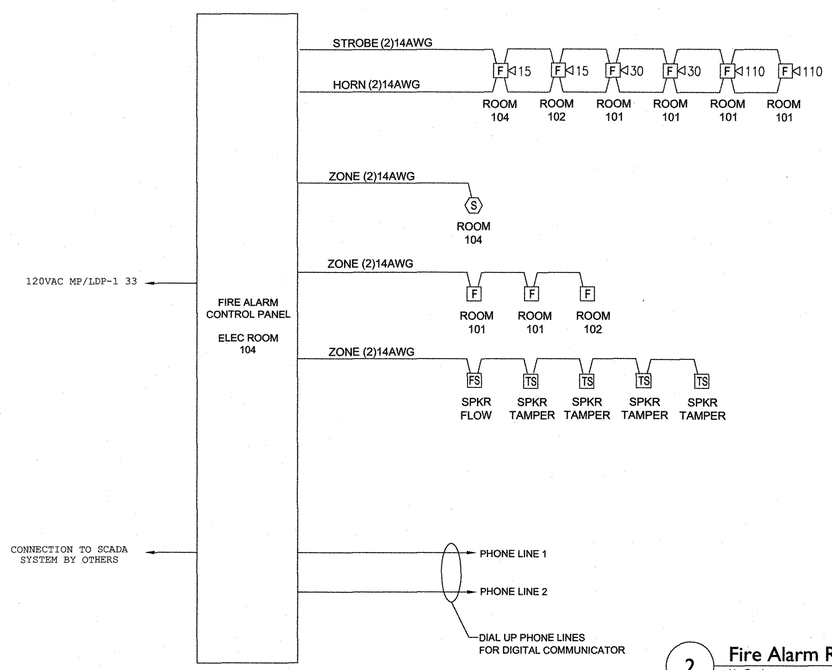

2 Fire Alarm Riser
No Scale

NASSAU COUNTY DEPARTMENT OF HEALTH
DIVISION OF ENVIRONMENTAL HEALTH
These plans are hereby approved
SHEET 66 OF 69
See first sheet hereof for date and signature

NOTE:
FIRE ALARM RISER IS INTENDED TO BE SCHEMATIC ONLY. ALL DEVICES INDICATED ON PLANS AND DETAILS ARE TO BE INSTALLED AND CONNECTED FOR PROPER OPERATION OF SYSTEM.

FIRE ALARM SEQUENCE OF OPERATION

A. UPON ACTIVATION OF MANUAL PULL STATION OR LOCAL WATER FLOW SWITCH, THE FIRE ALARM PANEL WILL GO INTO ALARM MODE AND SOUND THE AUDIO VISUAL DEVICES, INDICATE ALARM ZONE LOCATION VIA A MESSAGE AT THE FIRE ALARM CONTROL PANEL AND TRANSMIT AN ALARM SIGNAL TO THE FIRE DEPARTMENT.

B. UPON ACTIVATION OF A VALVE MONITORING POINT MONITORING POINT THE SYSTEM SHALL INDICATE A SUPERVISORY CONDITION VIA A MESSAGE AT THE FIRE ALARM CONTROL PANEL, AND TRANSMIT A SUPERVISORY SIGNAL TO THE FIRE DEPARTMENT.

C. UPON ACTIVATION OF A FAULT THE SYSTEM SHALL INDICATE A TROUBLE CONDITION VIA A MESSAGE AT THE FIRE ALARM CONTROL PANEL, AND TRANSMIT A TROUBLE SIGNAL TO THE FIRE DEPARTMENT.

UNAUTHORIZED ALTERATION OR ADDITION TO THIS PLAN IS A VIOLATION OF SECTION 7209 OF THE NEW YORK STATE EDUCATION LAW, UNLESS THE PERSON IS ACTING UNDER THE DIRECTION OF A LICENSED PROFESSIONAL ENGINEER. ANY PLAN ALTERATIONS BY ANOTHER ENGINEER MUST BE MARKED AS SUCH, INCLUDING THE SIGNATURE AND SEAL OF THE ALTERING ENGINEER.

CAUTION: IF SHEET IS LESS THAN 34"x22" USE GRAPHIC SCALE

APPR	DATE	DESCRIPTION	SYM
	3/30/12	APPROVAL SUBMISSION	-

STATE OF NEW YORK · JEFFREY L. McKENNA · 085598 · LICENSED PROFESSIONAL ENGINEER

DES RSM	DR SES
REVIEWED BY	FMH
PM/DM	—
CHIEF ENG/ARCH	—

DEPARTMENT OF THE NAVY
NAVAL FACILITIES ENGINEERING COMMAND ~ MID-ATLANTIC
NORTHEAST IPT
NAVAL FACILITIES ENGINEERING COMMAND
NAVAL STATION - NORFOLK, VIRGINIA
AQUA NY
NASSAU COUNTY, NEW YORK
MODIFICATIONS TO WATER TREATMENT FACILITY
FIRE ALARM / SECURITY EQUIPMENT

CODE ID. NO. 80091	SIZE D
SCALE:	1/4" = 1'-0"
MAXIMO NO. N62470-08-D-1001	
JOB ORDER NO. WE-25	
SPEC. NO.	
CONSTR. CONTR. NO.	112G02223
NAVFAC DRAWING NO.	
SHEET	OF — —

FA-1

NOV 07 2012

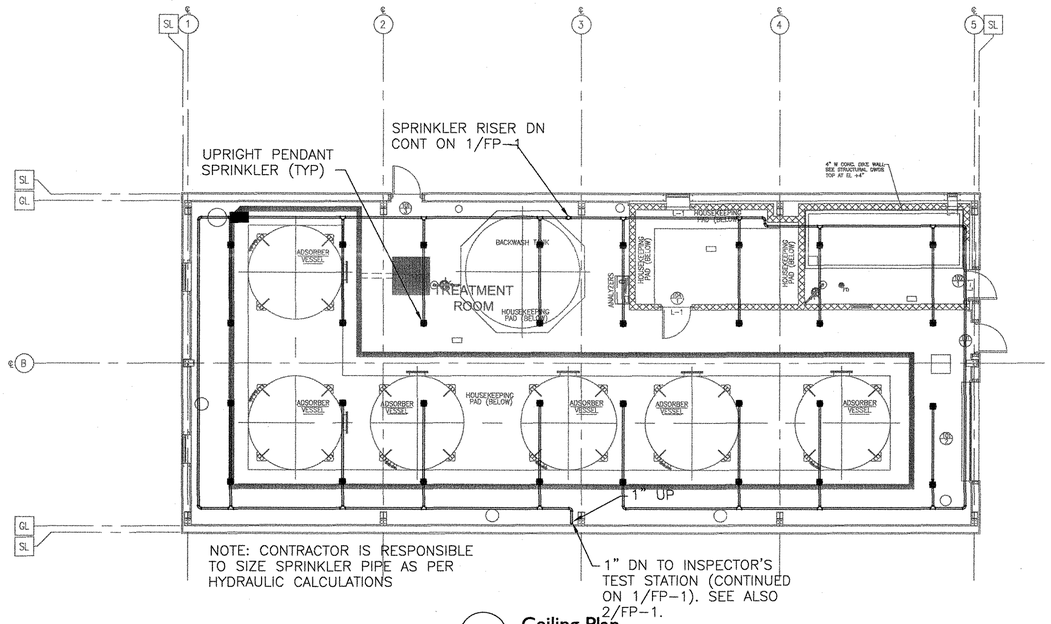

3 **Ceiling Plan**
1/8" = 1'-0"

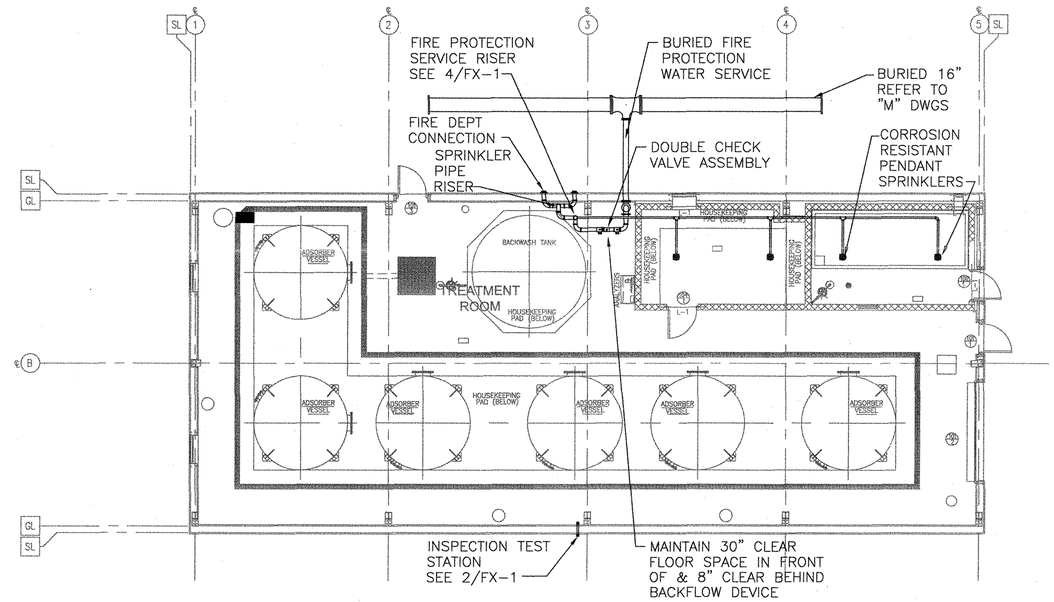

1 **Floor Plan**
1/8" = 1'-0"

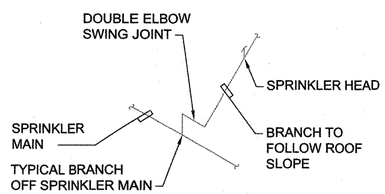

5 **Typical Swing Branch Detail**
Not to Scale

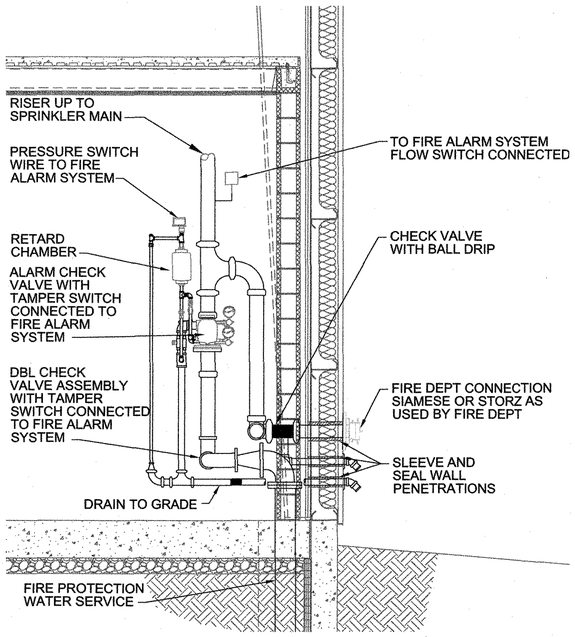

4 **Fire Service Riser Schematic**
Not to Scale

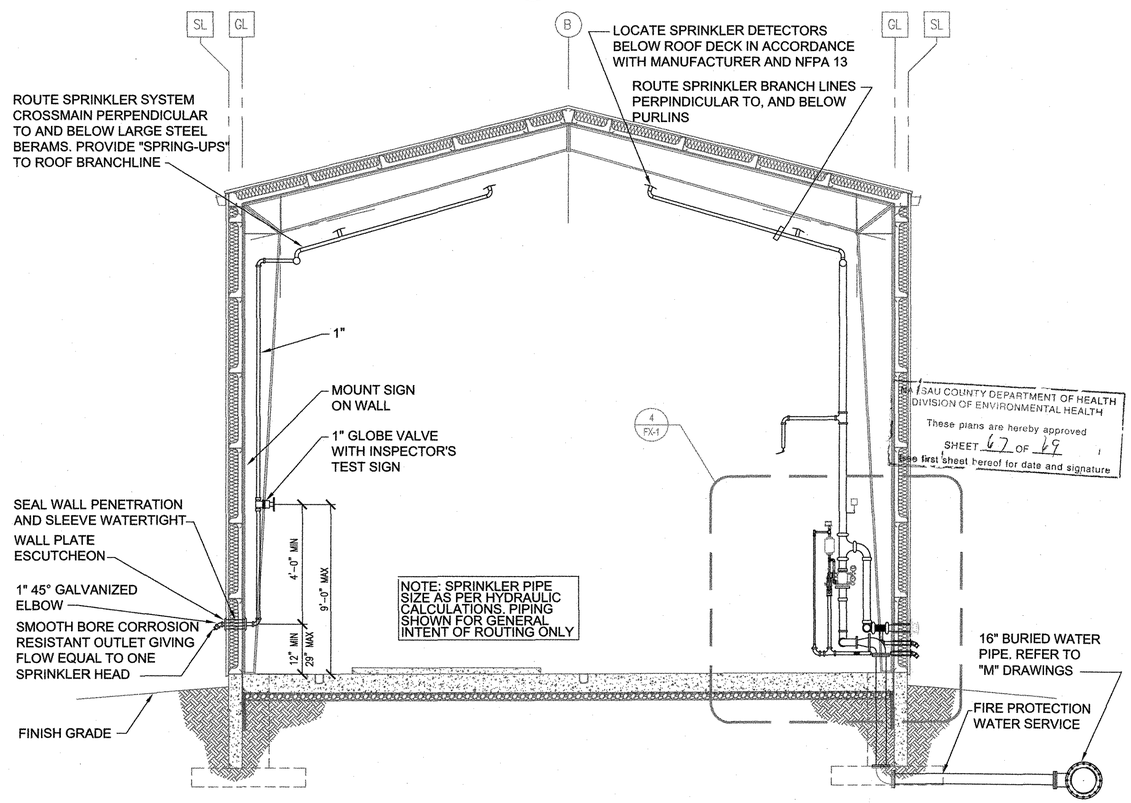

2 **Building Section**
1/4" = 1'-0"

CAUTION: IF SHEET IS LESS THAN 34"x22" USE GRAPHIC SCALE

UNAUTHORIZED ALTERATION OR ADDITION TO THIS PLAN IS A VIOLATION OF SECTION 7209 OF THE NEW YORK STATE EDUCATION LAW, UNLESS THE PERSON IS ACTING UNDER THE DIRECTION OF A LICENSED PROFESSIONAL ENGINEER. ANY PLAN ALTERATIONS BY ANOTHER ENGINEER MUST BE MARKED AS SUCH, INCLUDING THE SIGNATURE AND SEAL OF THE ALTERING ENGINEER.

SYM	DESCRIPTION	DATE	APPR
-	APPROVAL SUBMISSION	3/30/12	

NAVFAC

STATE OF NEW YORK · JEFFREY L McKENNA · 085598 · LICENSED PROFESSIONAL ENGINEER

DES	GPD	DR	MAK
REVIEWED BY		DCG	
PM/DM		HKM	
CHIEF ENG/ARCH		HKM	

DEPARTMENT OF THE NAVY
NAVAL FACILITIES ENGINEERING COMMAND
NORTHEAST IPT
NAVAL FACILITIES ENGINEERING COMMAND ~ MID-ATLANTIC
NAVAL STATION - NORFOLK, VIRGINIA
AQUA NY
NASSAU COUNTY, NEW YORK

MODIFICATIONS TO WATER TREATMENT FACILITY

FIRE SUPPRESSION

CODE ID. NO. 80091	SIZE D
SCALE:	VARIES
MAXIMO NO. N62470-08-D-1001	
JOB ORDER NO. WE-25	
SPEC. NO.	
CONSTR. CONTR. NO. 112G02223	
NAVFAC DRAWING NO.	
SHEET	OF --

FX-1

NOV 07 2012

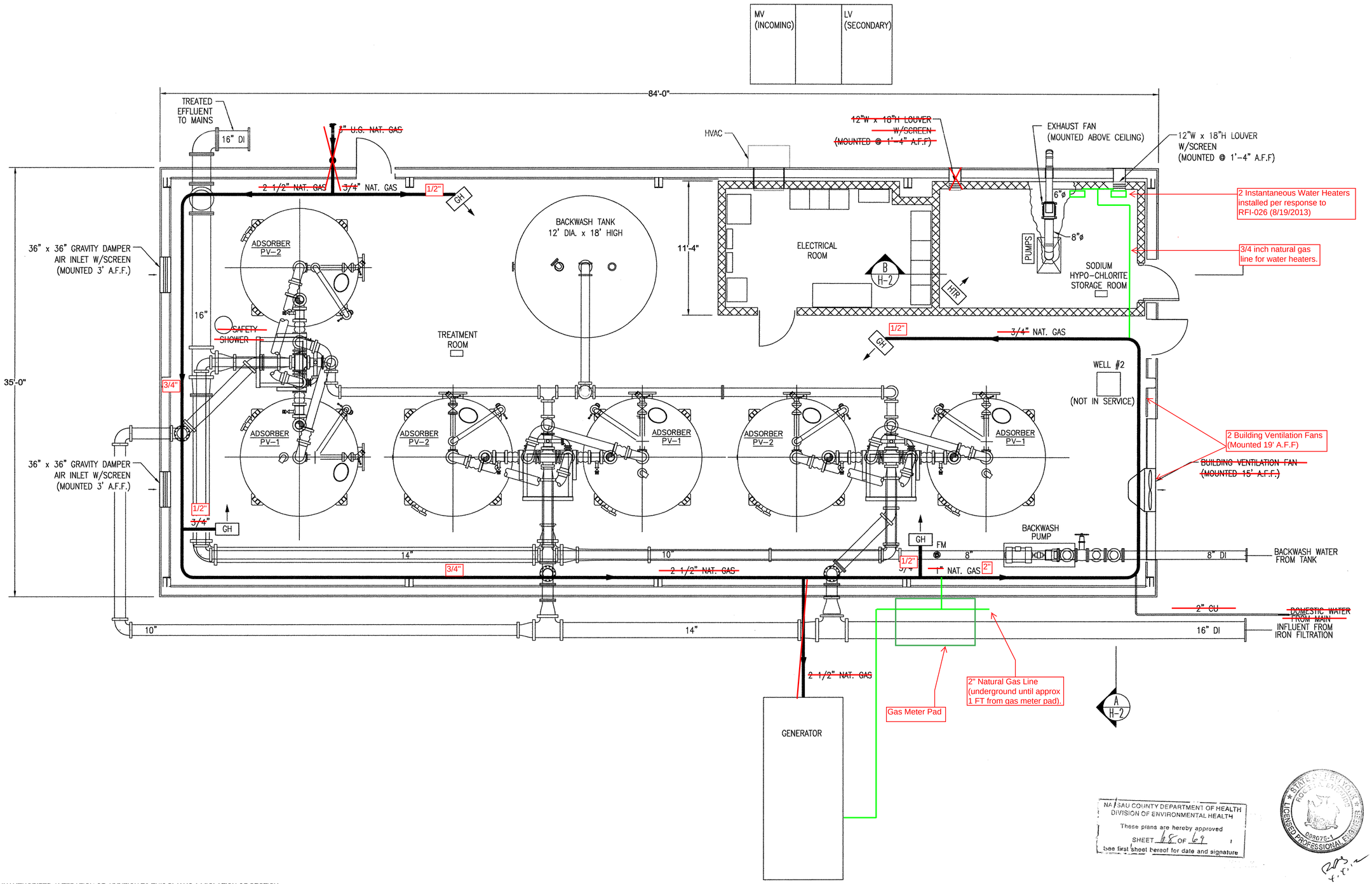

NASSAU COUNTY DEPARTMENT OF HEALTH
DIVISION OF ENVIRONMENTAL HEALTH
These plans are hereby approved
SHEET 68 OF 69
See first sheet hereof for date and signature

STATE OF NEW YORK
ROBERT A. GRIFFITHS
089075-1
LICENSED PROFESSIONAL ENGINEER

UNAUTHORIZED ALTERATION OR ADDITION TO THIS PLAN IS A VIOLATION OF SECTION 7209 OF THE NEW YORK STATE EDUCATION LAW, UNLESS THE PERSON IS ACTING UNDER THE DIRECTION OF A LICENSED PROFESSIONAL ENGINEER. ANY PLAN ALTERATIONS BY ANOTHER ENGINEER MUST BE MARKED AS SUCH, INCLUDING THE SIGNATURE AND SEAL OF THE ALTERING ENGINEER.

CAUTION: IF SHEET IS LESS THAN 34"x22" USE GRAPHIC SCALE

SYM	DESCRIPTION	DATE	APPR
1	APPROVAL SUBMISSION	3/30/12	-

NAVFAC

DEPARTMENT OF THE NAVY
NAVAL FACILITIES ENGINEERING COMMAND
NORTHEAST IPT
NAVAL FACILITIES ENGINEERING COMMAND ~ MID-ATLANTIC
NAVAL STATION - NORFOLK, VIRGINIA
AQUA NY
NASSAU COUNTY, NEW YORK
MODIFICATIONS TO WATER TREATMENT FACILITY
HVAC & PIPIING - NATURAL GAS PLAN

DES - DR
REVIEWED BY -
PM/DM -
CHIEF ENG/ARCH -

CODE ID. NO. 80091 SIZE D
SCALE:
MAXIMO NO. N62470-08-D-1001
JOB ORDER NO. WE-25
SPEC. NO.
CONSTR. CONTR. NO. 112G02223
NAVFAC DRAWING NO. ....
SHEET ..... OF ——
H-1

MAY 07 2012
68

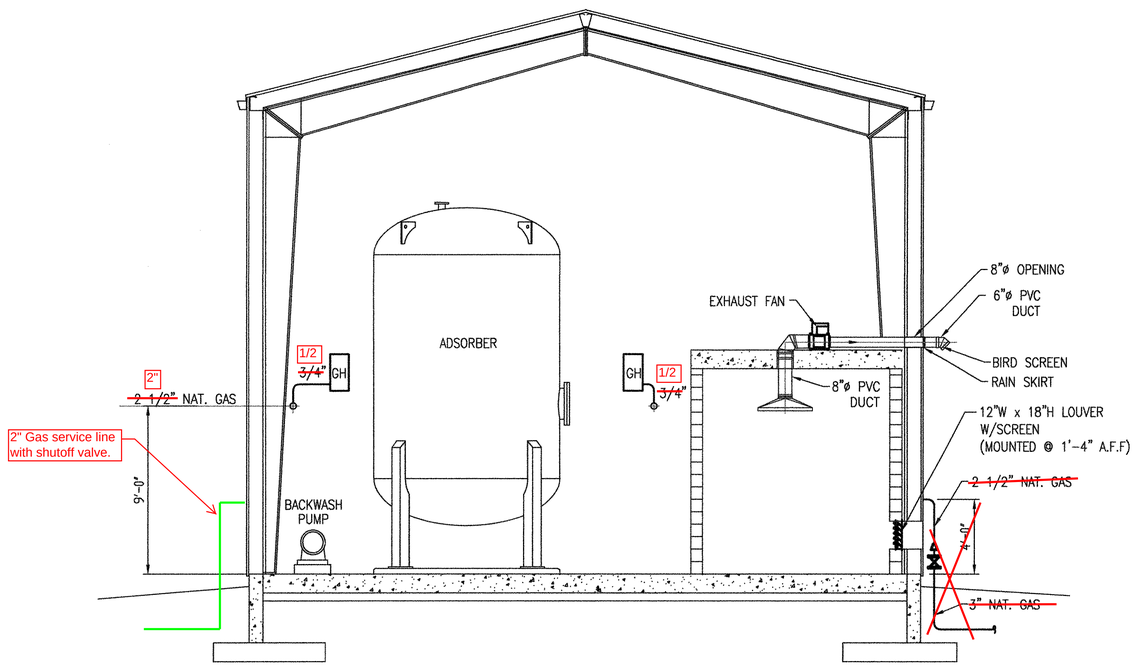

SECTION A-A
DWG. H-1

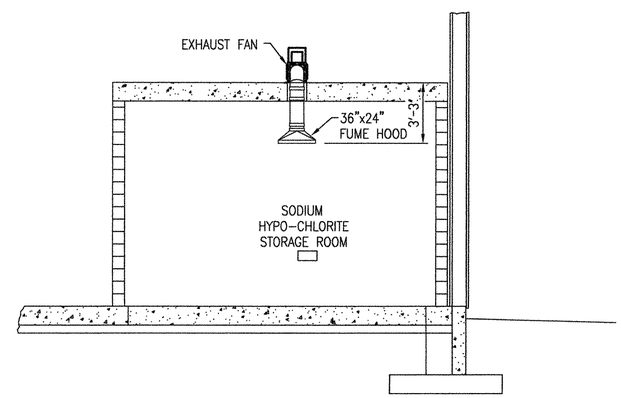

SECTION B-B
DWG. H-1

NASSAU COUNTY DEPARTMENT OF HEALTH
DIVISION OF ENVIRONMENTAL HEALTH
These plans are hereby approved
SHEET 69 OF 69
See first sheet hereof for date and signature

STATE OF NEW YORK
ROGER A. STRAUSS
LICENSED PROFESSIONAL ENGINEER
088075-1

RAS 4.4.12

UNAUTHORIZED ALTERATION OR ADDITION TO THIS PLAN IS A VIOLATION OF SECTION 7209 OF THE NEW YORK STATE EDUCATION LAW, UNLESS THE PERSON IS ACTING UNDER THE DIRECTION OF A LICENSED PROFESSIONAL ENGINEER. ANY PLAN ALTERATIONS BY ANOTHER ENGINEER MUST BE MARKED AS SUCH, INCLUDING THE SIGNATURE AND SEAL OF THE ALTERING ENGINEER.

CAUTION: IF SHEET IS LESS THAN 34"x22" USE GRAPHIC SCALE

SYM	DESCRIPTION	DATE	APPR
1	APPROVAL SUBMISSION	3/30/12	-

NAVFAC

DEPARTMENT OF THE NAVY
NAVAL FACILITIES ENGINEERING COMMAND
NAVAL FACILITIES ENGINEERING COMMAND ~ MID-ATLANTIC
NORTHEAST IPT NAVAL STATION - NORFOLK, VIRGINIA
AQUA NY NASSAU COUNTY, NEW YORK

MODIFICATIONS TO WATER TREATMENT FACILITY

HVAC & PIPIING - NATURAL GAS SECTIONS

CODE ID. NO. 80091 SIZE D
SCALE:
MAXIMO NO. N62470-08-D-1001
JOB ORDER NO. WE-25
SPEC. NO.
CONSTR. CONTR. NO. 112G02223
NAVFAC DRAWING NO. ....
SHEET ..... OF --

H-2

NOV 07 2012
69