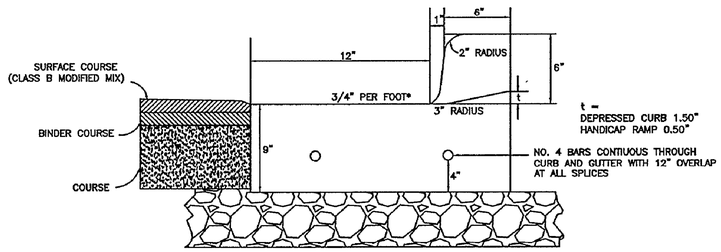

CONSTRUCTION JOINTS TO BE PLACED EVERY 10'
EXPANSION JOINTS TO BE PLACED EVERY 50'
CUT TO A DEPTH OF 3"
* NOTE: FOR REVERSED PITCH GUTTER FLAG MAINTAIN A 3/4" PER FT. CROSS SLOPE

CITY OF ELGIN
BARRIER CURB
B6.12 DETAIL

A7a

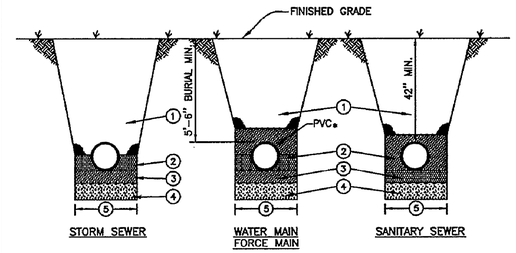

1. MECHANICALLY COMPACTED CA-6 CRUSHED STONE IN 6 INCH LIFTS UNDER OR WITHIN 2 FEET OF ANY PAVEMENT, CURB, GUTTER AND SIDEWALK, MACHINE COMPACTION OF EXCAVATED MATERIAL IN OTHER LOCATIONS WHERE SUITABLE.
2. WATERMAIN & FORCEMAIN:
   CA-6 CRUSHED STONE TAMPED INTO PLACE TO SPRING LINE OF DUCTILE IRON PIPE ALL AROUND
   * CA-6 CRUSHED STONE TO 6" ABOVE TOP OF PVC PIPE.

   STORM SEWER:
   CA-6 CRUSHED STONE TAMPED INTO PLACE TO SPRING LINE OF PIPE

   SANITARY SEWER:
   CA-6 CRUSHED STONE TAMPED INTO PLACE TO 12" ABOVE TOP OF PIPE.
3. 4" BED MECHANICALLY COMPACTED CA-6 CRUSHED STONE
4. UNSUITABLE MATERIAL TO BE REMOVED AND REPLACED.
5. TRENCH WIDTH
   OUTSIDE DIAMETER + 18 IN.

CITY OF ELGIN
PIPE BEDDING
DETAIL

A12

DENSITY CONTROL LIMITS		
MIXTURE COMPOSITION	PARAMETER	INDIVIDUAL TEST
IL-9.5, IL-12.5	N DESIGN > 90	92.0 – 96.0%
IL-9.5, IL-9.5L, IL-12.5	N DESIGN < 90	92.5 – 97.4%
IL-19.0, IL-25.0	N DESIGN > 90	93.0 – 96.0%
IL-19.0, IL-19.0L, IL-25.0	1033;1033; N DESIGN < 90	93.0 – 97.4%
ALL OTHER	N DESIGN = 30	93.0 – 97.4%

HOT-MIX SPECIFICATIONS			
ITEM	AC-TYPE	VOIDS	RAP%
HOT MIX ASPHALT SURFACE COURSE, MIX "D", N50	PG 64-22	4% @ 50 GYR	15
HOT MIX ASPHALT BINDER COURSE, IL-19.0, N50	PG 64-22/58-22	4% @ 50 GYR	25
HOT MIX ASPHALT BASE COURSE, IL-19.0	PG 64-22/58-22	4% @ 50 GYR	25

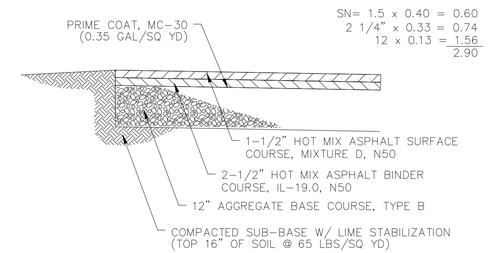

ASPHALT PARKING
SECTION

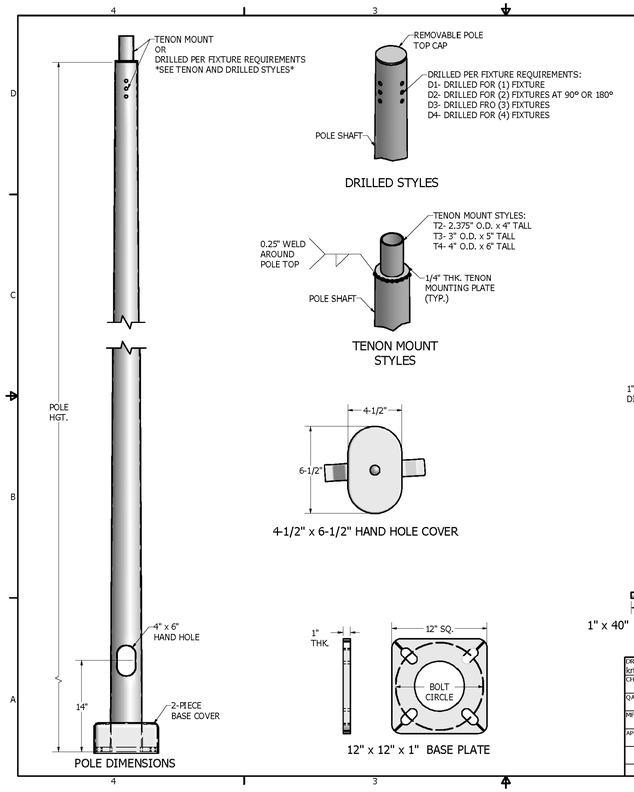

POLE SHAFT SPECIFICATIONS	
NO.	POLE SHAFT SPECIFICATIONS
1.	SHAFTS ARE FABRICATED FROM A WELDABLE GRADE, HOT ROLLED COMMERCIAL QUALITY CARBON STEELWITH A GUARANTEED MINIMUM YIELD STRENGTH OF 55,000 PSI AFTER FABRICATION. IT IS A ONE-PIECECONSTRUCTION WITH A FULL-LENGTH, LONGITUDINAL WELD. THE POLE TAPERS AT A RATE OF 0.14" PER FT.
2.	BASE PLATES ARE CONSTRUCTED OF A STRUCTURAL QUALITY HOT ROLLED CARBON STEEL PLATE WITH A GUARANTEED MINIMUM YIELD STRENGTH OF 36,000 P.S.I.
3.	ANCHOR BOLTS ARE "L" BENT BARS HAVING A MINIMUM YIELD STRENGTH OF 55,000 P.S.I. THE BOLTS ARE PARTIALLY GALVINIZED. FURNISHED COMPLETE WITH 2 HEX NUTS AND 2 FLAT WASHERS.
4.	POLES ARE STANDARD POLYESTER POWDER COATED FINISH.

POLE DIMENSIONS				
POLE HGT (FT.)	TOP DIA. (IN.)	BOTTOM DIA. (IN.)	GAGE	MTG. HGT. (FT.)
30'	3.8"	8.0"	11	30'

BASE PLATE DIMENSIONS			
BOLT CIRCLE (IN.)	BASE PLATE DIM. (IN.)	BOLT HOLE (IN.)	PLATE THK. (IN.)
11"	12" SQ.	1.25"	1"

ANCHOR BOLT DIMENSIONS	
ANCHOR BOLT DIA. (IN.)	ANCHOR BOLT LENGTH (IN.)
1"	40"

ALLOWABLE WIND LOADING (SQ. FT.)				
WIND*	80 MPH	90 MPH	100 MPH	120 MPH
EPA	22.1	17.9	14.5	10.0

* WITH 1.3 GUST FACTOR

DRAWN kristines		UNITED LIGHTING STANDARDS, INC. 23171 GROESBECK HWY. WARREN, MI 48089
CHECKED		TITLE
QA		
MFG		
APPROVED		SIZE C / DWG NO RTS-30-8011 / REV
		SCALE / SHEET 1 OF 1

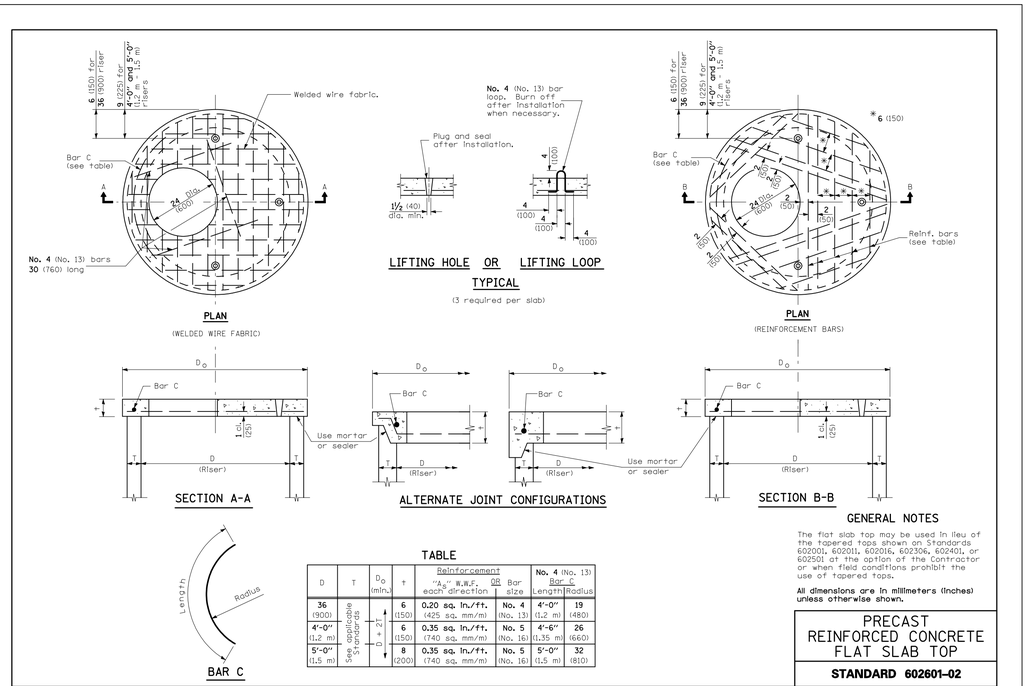

TABLE

D	T	D_o (min.)	t	Reinforcement "A" W.W.F. each direction	OR Bar size	No. 4 (No. 13) Bar C Length	Radius
36 (900)	See applicable standards	D + 2T	6 (150)	0.20 sq. in./ft. (425 sq. mm/m)	No. 4 (No. 13)	4'-0" (1.2 m)	19 (480)
4'-0" (1.2 m)			6 (150)	0.35 sq. in./ft. (740 sq. mm/m)	No. 5 (No. 16)	4'-6" (1.35 m)	26 (660)
5'-0" (1.5 m)			8 (200)	0.35 sq. in./ft. (740 sq. mm/m)	No. 5 (No. 16)	5'-0" (1.5 m)	32 (810)

GENERAL NOTES

The flat slab top may be used in lieu of the tapered tops shown on Standards 602001, 602011, 602016, 602306, 602401, or 602501 at the option of the Contractor or when field conditions prohibit the use of tapered tops.

All dimensions are in millimeters (inches) unless otherwise shown.

PRECAST
REINFORCED CONCRETE
FLAT SLAB TOP

STANDARD 602601-02

TITLE: WEST PARKING LOT ADDITION - PHASE II

GENERAL DETAILS

DSGN.	JCL
DWN.	NDP
CHKD.	JCL
SCALE : N/A	
DT100004-2.dgn	

NO.	DATE	NATURE OF REVISION

CLIENT: ELGIN COMMUNITY COLLEGE
1700 SPARTAN DRIVE
ELGIN, ILLINOIS
847-697-1000

WILLS BURKE KELSEY ASSOCIATES LTD.
116 West Main Street, Suite 201
St. Charles, Illinois 60174
(630) 443-7755

PROJECT NO. 10-0004
DATE : 04-10-2010
SHEET 18 OF 18
DRAWING NO.
DT2