Client: University of Iowa
Facility: Oakdale Renewable Energy Plant
Project #: M133003

Location: Hurst Boiler Exhaust Duct
Date: 7/23/13

Run 1

Time	O2 %	CO2 %	Time	O2 %	CO2 %
12:05	10.10	10.56	12:35	10.05	10.62
12:06	10.12	10.55	12:36	10.00	10.66
12:07	10.03	10.63	12:37	10.04	10.62
12:08	10.07	10.59	12:38	10.19	10.49
12:09	10.08	10.59	12:39	10.11	10.57
12:10	10.29	10.40	12:40	10.12	10.55
12:11	10.43	10.26	12:41	10.29	10.40
12:12	10.49	10.21	12:42	10.25	10.44
12:13	10.40	10.29	12:43	10.23	10.45
12:14	10.37	10.31	12:44	10.25	10.43
12:15	10.16	10.52	12:45	10.23	10.46
12:16	10.01	10.65	12:46	10.13	10.54
12:17	10.25	10.43	12:47	10.08	10.59
12:18	10.16	10.52	12:48	9.76	10.89
12:19	10.17	10.50	12:49	9.77	10.88
12:20	10.27	10.42	12:50	9.84	10.81
12:21	10.30	10.38	12:51	9.84	10.81
12:22	10.16	10.52	12:52	9.98	10.67
12:23	10.15	10.52	12:53	10.07	10.60
12:24	10.23	10.45	12:54	10.04	10.61
12:25	10.13	10.54	12:55	10.02	10.62
12:26	10.14	10.54	12:56	9.93	10.71
12:27	10.05	10.60	12:57	9.60	11.00
12:28	10.01	10.64	12:58	9.55	11.06
12:29	10.08	10.58	12:59	9.47	11.14
12:30	10.14	10.53	13:00	9.48	11.13
12:31	10.20	10.47	13:01	9.61	11.01
12:32	10.14	10.53	13:02	9.71	10.93
12:33	10.10	10.57	13:03	9.86	10.80
12:34	10.01	10.65	13:04	10.01	10.66
			Average	**10.06**	**10.60**

© Mostardi Platt

Client: University of Iowa
Facility: Oakdale Renewable Energy Plant
Project #: M133003

Location: Hurst Boiler Exhaust Duct
Date: 7/23/13

Run 1

Time	O2 %	CO2 %	Time	O2 %	CO2 %
13:05	10.06	10.62	13:35	9.51	11.12
13:06	10.12	10.56	13:36	9.56	11.06
13:07	10.16	10.53	13:37	9.50	11.12
13:08	10.13	10.56	13:38	9.56	11.05
13:09	10.14	10.56	13:39	9.57	11.05
13:10	10.19	10.52	13:40	9.59	11.03
13:11	10.62	10.08	13:41	9.64	10.99
13:12	10.41	10.35	13:42	9.63	11.00
13:13	9.91	10.75	13:43	9.44	11.20
13:14	9.92	10.76	13:44	9.28	11.36
13:15	9.52	11.13	13:45	9.42	11.22
13:16	9.69	10.96	13:46	9.69	10.96
13:17	9.68	10.97	13:47	9.92	10.75
13:18	9.69	10.95	13:48	10.00	10.68
13:19	9.90	10.77	13:49	10.00	10.67
13:20	9.93	10.73	13:50	9.98	10.69
13:21	10.03	10.64	13:51	9.89	10.77
13:22	10.05	10.62	13:52	9.64	11.00
13:23	9.88	10.78	13:53	9.55	11.08
13:24	9.87	10.79	13:54	9.40	11.22
13:25	9.73	10.91	13:55	9.43	11.19
13:26	9.64	10.99	13:56	9.20	11.42
13:27	9.46	11.16	13:57	9.20	11.42
13:28	9.45	11.16	13:58	9.30	11.31
13:29	9.39	11.22	13:59	9.38	11.23
13:30	9.35	11.26	14:00	9.50	11.12
13:31	9.44	11.17	14:01	9.56	11.05
13:32	9.48	11.13	14:02	9.68	10.96
13:33	9.55	11.06	14:03	9.72	10.92
13:34	9.48	11.14	14:04	9.70	10.94
			Average	**9.71**	**10.90**

© Mostardi Platt

Client: University of Iowa
Facility: Oakdale Renewable Energy Plant
Project #: M133003

Location: Hurst Boiler Exhaust Duct
Date: 7/23/13

Run 1

Time	O2 %	CO2 %	Time	O2 %	CO2 %
14:05	9.76	10.88	14:35	9.68	10.95
14:06	9.66	10.97	14:36	9.63	10.99
14:07	9.64	10.98	14:37	9.52	11.09
14:08	9.74	10.90	14:38	9.64	10.99
14:09	9.69	10.94	14:39	9.16	11.50
14:10	9.71	10.93	14:40	9.48	11.15
14:11	9.56	11.07	14:41	9.69	10.95
14:12	9.20	11.43	14:42	9.77	10.88
14:13	9.39	11.24	14:43	9.71	10.95
14:14	9.47	11.17	14:44	9.67	10.97
14:15	9.48	11.14	14:45	9.72	10.93
14:16	9.61	11.01	14:46	9.72	10.92
14:17	9.64	10.99	14:47	9.64	11.00
14:18	9.61	11.01	14:48	9.58	11.05
14:19	9.67	10.96	14:49	9.53	11.11
14:20	9.65	10.97	14:50	9.38	11.25
14:21	9.58	11.04	14:51	9.41	11.22
14:22	9.50	11.12	14:52	9.40	11.22
14:23	9.42	11.20	14:53	9.46	11.17
14:24	9.37	11.25	14:54	9.43	11.19
14:25	9.34	11.27	14:55	9.32	11.32
14:26	9.34	11.27	14:56	9.38	11.25
14:27	9.30	11.32	14:57	9.43	11.21
14:28	9.30	11.32	14:58	9.54	11.10
14:29	9.34	11.27	14:59	9.62	11.02
14:30	9.45	11.15	15:00	9.62	11.02
14:31	9.46	11.16	15:01	9.70	10.95
14:32	9.42	11.19			
14:33	9.58	11.03			
14:34	9.63	11.00			
			Average	**9.53**	**11.10**

© Mostardi Platt

Client: University of Iowa
Facility: Oakdale Renewable Energy Plant
Project #: M133003

Location: Hurst Boiler Exhaust Duct
Date: 7/23/13

Run 2

Time	O2 %	CO2 %	Time	O2 %	CO2 %
17:03	11.01	9.70	17:33	10.81	9.88
17:04	10.92	9.78	17:34	10.95	9.77
17:05	10.90	9.80	17:35	10.94	9.78
17:06	10.58	10.12	17:36	10.91	9.81
17:07	10.60	10.09	17:37	10.76	9.97
17:08	10.86	9.86	17:38	10.64	10.08
17:09	11.07	9.65	17:39	10.93	9.80
17:10	11.11	9.61	17:40	11.14	9.61
17:11	11.10	9.62	17:41	11.12	9.62
17:12	11.12	9.62	17:42	11.07	9.67
17:13	11.06	9.66	17:43	11.00	9.75
17:14	11.04	9.68	17:44	11.06	9.67
17:15	11.03	9.69	17:45	11.05	9.68
17:16	10.97	9.75	17:46	10.95	9.78
17:17	11.00	9.72	17:47	10.89	9.83
17:18	11.03	9.69	17:48	11.04	9.69
17:19	10.99	9.71	17:49	10.89	9.83
17:20	11.07	9.65	17:50	10.88	9.83
17:21	10.99	9.71	17:51	10.91	9.80
17:22	10.99	9.71	17:52	10.83	9.90
17:23	10.89	9.82	17:53	10.94	9.79
17:24	10.80	9.89	17:54	10.89	9.85
17:25	10.79	9.90	17:55	10.95	9.78
17:26	10.82	9.87	17:56	11.01	9.73
17:27	11.01	9.69	17:57	11.04	9.70
17:28	10.97	9.74	17:58	11.10	9.65
17:29	10.85	9.85	17:59	11.02	9.72
17:30	10.83	9.86	18:00	11.05	9.70
17:31	10.82	9.88	18:01	10.99	9.76
17:32	10.87	9.83	18:02	11.08	9.67
			Average	**10.95**	**9.80**

© Mostardi Platt

Client: University of Iowa
Facility: Oakdale Renewable Energy Plant
Project #: M133003

Location: Hurst Boiler Exhaust Duct
Date: 7/23/13

Run 2

Time	O2 %	CO2 %	Time	O2 %	CO2 %
18:03	11.06	9.70	18:33	10.76	9.96
18:04	11.03	9.72	18:34	10.72	10.00
18:05	10.96	9.79	18:35	10.77	9.97
18:06	10.92	9.84	18:36	10.47	10.24
18:07	10.62	10.10	18:37	10.74	9.98
18:08	11.01	9.75	18:38	10.89	9.85
18:09	11.02	9.74	18:39	11.02	9.74
18:10	11.09	9.67	18:40	11.19	9.56
18:11	11.12	9.63	18:41	11.67	9.14
18:12	11.04	9.70	18:42	10.04	10.66
18:13	11.03	9.71	18:43	10.03	10.66
18:14	11.01	9.74	18:44	9.97	10.71
18:15	11.00	9.75	18:45	9.95	10.72
18:16	10.82	9.91	18:46	10.03	10.65
18:17	10.99	9.75	18:47	10.02	10.66
18:18	10.94	9.79	18:48	9.87	10.80
18:19	10.82	9.91	18:49	9.87	10.80
18:20	10.90	9.83	18:50	9.97	10.71
18:21	10.83	9.90	18:51	10.01	10.68
18:22	10.87	9.86	18:52	10.05	10.64
18:23	10.88	9.85	18:53	10.04	10.65
18:24	10.88	9.85	18:54	10.18	10.52
18:25	10.79	9.94	18:55	10.19	10.51
18:26	10.86	9.87	18:56	10.11	10.58
18:27	10.92	9.81	18:57	10.01	10.67
18:28	10.91	9.82	18:58	9.95	10.72
18:29	10.96	9.77	18:59	9.76	10.89
18:30	10.94	9.79	19:00	9.85	10.81
18:31	10.84	9.88	19:01	9.83	10.83
18:32	10.95	9.77	19:02	9.75	10.89
			Average	**10.60**	**10.10**

© Mostardi Platt

Client: University of Iowa
Facility: Oakdale Renewable Energy Plant
Project #: M133003

Location: Hurst Boiler Exhaust Duct
Date: 7/23/13

Run 2

Time	O2 %	CO2 %	Time	O2 %	CO2 %
19:03	9.61	11.02	19:33	9.95	10.73
19:04	9.60	11.05	19:34	9.89	10.79
19:05	9.20	11.45	19:35	9.41	11.26
19:06	9.28	11.36	19:36	9.66	11.00
19:07	9.79	10.88	19:37	9.95	10.74
19:08	10.05	10.64	19:38	10.11	10.60
19:09	10.21	10.50	19:39	10.12	10.59
19:10	10.22	10.50	19:40	10.06	10.65
19:11	10.27	10.45	19:41	10.06	10.65
19:12	10.29	10.43	19:42	9.93	10.77
19:13	10.17	10.55	19:43	9.89	10.81
19:14	10.10	10.61	19:44	10.01	10.70
19:15	10.13	10.58	19:45	10.01	10.69
19:16	10.02	10.68	19:46	9.99	10.71
19:17	10.07	10.62	19:47	9.99	10.71
19:18	10.04	10.65	19:48	9.88	10.81
19:19	9.93	10.76	19:49	9.92	10.76
19:20	9.87	10.80	19:50	9.92	10.77
19:21	9.82	10.85	19:51	9.83	10.84
19:22	9.91	10.78	19:52	9.86	10.82
19:23	9.80	10.87	19:53	9.73	10.93
19:24	9.80	10.88	19:54	9.80	10.88
19:25	9.75	10.91			
19:26	9.81	10.85			
19:27	9.92	10.76			
19:28	9.89	10.78			
19:29	9.92	10.76			
19:30	9.93	10.74			
19:31	9.88	10.79			
19:32	9.96	10.72			
			Average	**9.91**	**10.80**

© Mostardi Platt

Client: University of Iowa
Facility: Oakdale Renewable Energy Plant
Project #: M133003

Location: Hurst Boiler Exhaust Duct
Date: 7/23/13

Run 3

Time	O2 %	CO2 %	Time	O2 %	CO2 %
21:18	10.01	10.66	21:48	10.25	10.48
21:19	10.31	10.40	21:49	10.12	10.60
21:20	10.40	10.33	21:50	9.69	10.98
21:21	10.54	10.21	21:51	9.76	10.92
21:22	10.72	10.05	21:52	9.93	10.77
21:23	10.81	9.97	21:53	10.15	10.56
21:24	10.72	10.05	21:54	10.32	10.41
21:25	10.67	10.08	21:55	10.40	10.33
21:26	10.59	10.17	21:56	10.48	10.25
21:27	10.51	10.24	21:57	10.56	10.19
21:28	9.87	10.83	21:58	10.31	10.42
21:29	9.42	11.25	21:59	10.19	10.53
21:30	9.49	11.18	22:00	10.18	10.54
21:31	9.64	11.02	22:01	10.01	10.69
21:32	9.77	10.92	22:02	9.95	10.73
21:33	9.75	10.94	22:03	9.79	10.88
21:34	9.74	10.95	22:04	9.95	10.73
21:35	9.72	10.98	22:05	10.03	10.66
21:36	9.87	10.83	22:06	10.08	10.62
21:37	9.97	10.75	22:07	10.14	10.57
21:38	10.05	10.68	22:08	10.18	10.53
21:39	10.20	10.54	22:09	10.19	10.53
21:40	10.43	10.33	22:10	10.02	10.68
21:41	10.40	10.36	22:11	10.02	10.68
21:42	10.35	10.39	22:12	10.17	10.56
21:43	10.39	10.37	22:13	10.20	10.52
21:44	10.26	10.49	22:14	9.75	10.94
21:45	10.32	10.42	22:15	9.51	11.18
21:46	10.32	10.42	22:16	10.09	10.64
21:47	10.35	10.39	22:17	10.23	10.52
			Average	**10.14**	**10.60**

© Mostardi Platt

Client: University of Iowa
Facility: Oakdale Renewable Energy Plant
Project #: M133003

Location: Hurst Boiler Exhaust Duct
Date: 7/23/13

Run 3

Time	O2 %	CO2 %	Time	O2 %	CO2 %
22:18	10.42	10.34	22:48	10.95	9.86
22:19	10.69	10.08	22:49	10.95	9.86
22:20	10.80	9.98	22:50	10.84	9.96
22:21	10.66	10.14	22:51	10.71	10.09
22:22	14.18	6.75	22:52	10.86	9.94
22:23	11.23	9.59	22:53	10.73	10.07
22:24	11.30	9.52	22:54	10.73	10.07
22:25	11.25	9.56	22:55	10.70	10.10
22:26	11.31	9.50	22:56	10.72	10.08
22:27	11.24	9.58	22:57	11.25	9.59
22:28	11.24	9.59	22:58	10.36	10.41
22:29	11.14	9.68	22:59	10.55	10.23
22:30	10.77	10.04	23:00	10.62	10.18
22:31	10.70	10.08	23:01	10.01	10.74
22:32	10.70	10.10	23:02	10.29	10.49
22:33	10.75	10.04	23:03	10.40	10.39
22:34	10.67	10.13	23:04	10.39	10.42
22:35	10.68	10.11	23:05	10.49	10.31
22:36	10.48	10.31	23:06	10.44	10.35
22:37	10.83	9.97	23:07	10.43	10.36
22:38	10.50	10.30	23:08	10.42	10.37
22:39	9.86	10.88	23:09	10.43	10.36
22:40	10.42	10.36	23:10	10.47	10.32
22:41	10.70	10.11	23:11	10.46	10.33
22:42	10.81	10.01	23:12	10.44	10.34
22:43	10.83	9.99	23:13	10.36	10.43
22:44	10.73	10.08	23:14	10.38	10.40
22:45	10.73	10.08	23:15	10.38	10.40
22:46	10.76	10.04	23:16	10.38	10.40
22:47	10.79	10.01	23:17	10.30	10.47
			Average	**10.73**	**10.10**

© Mostardi Platt

Client: University of Iowa
Facility: Oakdale Renewable Energy Plant
Project #: M133003

Location: Hurst Boiler Exhaust Duct
Date: 7/23&24/2013

Run 3

Time	O2 %	CO2 %	Time	O2 %	CO2 %
23:18	10.31	10.46	23:48	10.33	10.44
23:19	10.10	10.66	23:49	10.30	10.47
23:20	10.24	10.52	23:50	10.55	10.24
23:21	10.21	10.56	23:51	10.07	10.68
23:22	10.17	10.59	23:52	10.06	10.68
23:23	10.28	10.49	23:53	10.30	10.48
23:24	10.23	10.53	23:54	10.30	10.47
23:25	10.32	10.45	23:55	10.34	10.44
23:26	9.91	10.82	23:56	10.33	10.45
23:27	9.86	10.87	23:57	10.29	10.48
23:28	9.98	10.77	23:58	10.41	10.37
23:29	10.09	10.67	23:59	10.31	10.45
23:30	10.13	10.63	0:00	10.31	10.45
23:31	10.31	10.46	0:01	10.18	10.56
23:32	10.33	10.45	0:02	10.08	10.66
23:33	10.36	10.41	0:03	10.07	10.66
23:34	10.34	10.42	0:04	10.12	10.62
23:35	10.35	10.41	0:05	10.14	10.60
23:36	10.32	10.44			
23:37	10.28	10.48			
23:38	10.21	10.53			
23:39	10.29	10.47			
23:40	10.19	10.55			
23:41	10.23	10.52			
23:42	10.33	10.43			
23:43	10.34	10.42			
23:44	10.35	10.41			
23:45	10.24	10.51			
23:46	10.24	10.52			
23:47	10.29	10.48			
			Average	**10.24**	**10.50**

© Mostardi Platt

Appendix G - Field Data Sheets

© Mostardi Platt

GAS TRAVERSE DATA

Project: University of Iowa - Oakdale

Location: Hurst Boiler outlet Duct

Date: 7/24/13 Test No: 1 Time:

Point No.	Time T1	NO_x	Time T2	CO	Time T3	O_2
Bottom pt 1-1	1015		1230	1	1445 1447	
-2	1019		1233		1450	
-3	1023		1236		1453	
-4	1027		1239		1456	
2-1	1035		1245		1500 1502	
-2	1039		1248		1505	
-3	1043		1251		1508	
-4	1047		1254		1511	
3-1	1054		1301		1516 1518	
-2	1058		1304		1521	
-3	1102		1307		1524	
-4	1106		1310		1527	
4-1	1111		1319		1533 1535	
-2	1115		1322		1538	
-3	1119		1325		1541	
-4	1123		1328 1331		1544	
5-1	1132		1338		1549 1551	
-2	1136		1341		1554	
-3	1140		1344		1557	
-4	1144		1347 1349		1600	

Data Taken By:

© Mostardi Platt

PART 60 GASEOUS FIELD DATA SHEET

Project Number: M133002 Date: 7/24/13
Client: U of Iowa - Oakdale Operator: JFK
Test Location: Hurst Boiler Fuel Factor:

	Time		Reference Method Data			Volumetric Flow Data		
Test	Start	End	NO_X ppm	CO ppm	O_2 %	Time	scfh, RM Data	scfh, CEM Data
1	1015	1144						
2	1230	1347						
3	1445	1600						

	Calibration Corrected RM Data				CO2 % lbs/hr CEM Data			hour
Test	NO_X ppm	CO ppm	O_2 %	NO_X lbs/MMBtu	NO_X ppm	CO ppm	O_2 %	NO_X lbs/MMBtu
1	36.3	2.1	11.4	0.088	9.0	0.07		1.99
2	34.4	2.1	11.1	0.081	9.6	0.03		1.94
3	33.2	3.2	11.1	0.078	9.6			

© Mostardi Platt

Volumetric Flow Rate Determination Field Data Sheet

Project Number: M133003
Date: 7/24/13
Client: UNIVERSITY OF IOWA
Test Number: PRE 1
Test Location: HURST BOILER OUTLET DUCT
Start Time: 957
Source Condition:
End Time: 1010
Test Engineer: DT
Test Tech: AD

Duct Diameter _____ ft 3.5'x5.5'
Upstream Disturbance, Diameters _____
Flue Area 19.250 ft²
Downstream Disturbance, Diameters _____
Port Length 6 "
Pitot ID 170 Pitot Coefficient (C_p) .840

P_{bar} 29.25 "Hg
CO_2 % 9.4
Wet Bulb Temp _____
Leak Checks Passed@
Static -.2 "H_2O
O_2 % 11.4
Dry Bulb Temp _____
Pre 1.2 Inches H_2O
Static _____ "Hg
N_2 % _____
B_{ws} .179
Post 1.2 Inches H_2O
P_s _____ "Hg
Meter No. CM6
Fluke # _____
Umbilical ID ___

Port-Point #	ΔP	Temp. °F	$\sqrt{\Delta P}$	Null Point Angle, Degrees	Port-Point #	ΔP	Temp. °F	$\sqrt{\Delta P}$	Null Point Angle, Degrees
1-1	.015	379			4-1	.03	351		
-2	.015	385			-2	.03	355		
-3	.015	385			-3	.035	359		
-4	.015	368			-4	.030	354		
2-1	.025	370			5-1	.01	324		
-2	.020	373			-2	.015	319		
-3	.015	372			-3	.015	316		
-4	.01	359			-4	.020	309		
3-1	.03	365							
-2	.03	368							
-3	.025	369							
-4	.015	340							
Average									

.44 x CO_2% + .32 x O_2% + .28 x N_2% = _____(Md)

(_____Md × _____1-Bws) + (18 × _____Bws) = _____(Ms)

$$85.49 \times ___Cp \times \sqrt{\frac{(_____)Ts\ °R}{___Ms \times ___Ps}} \times ___\ \sqrt{\Delta P} = ___\ ft/sec\ (Vs)$$

_____ Vs × _____ Flue Area × 60 = _____acfm

$$17.647 \times ____acfm \times \frac{Ps}{Ts\ °R} = _____ scfm \times 60 = _____ scfh$$

© Mostardi Platt

Volumetric Flow Rate Determination Field Data Sheet

Project Number: M133003 Date: 7/24/13
Client: UNIVERSITY OF IOWA Test Number: POST 1 / PRE 2
Test Location: HURST BOILER OUTLET DUCT Start Time: 1153
Source Condition: End Time: 1203
Test Engineer: DT Test Tech: AO

Duct Diameter ____ ft 3.5' x 5.5' Upstream Disturbance, Diameters ____
Flue Area 19.250 ft² Downstream Disturbance, Diameters ____
Port Length 6 " Pitot ID 170 Pitot Coefficient (C_p) .840

P_{bar} 29.25 "Hg CO_2 % 9.4 Wet Bulb Temp ____ Leak Checks Passed@
Static -.2 "H_2O O_2 % 11.4 Dry Bulb Temp ____ Pre ✓.2 Inches H_2O
Static ____ "Hg N_2 % ____ B_{ws} .179 Post ✓.2 Inches H_2O
P_s ____ "Hg Meter No. CM6 Fluke # ____ Umbilical ID ___

Port-Point #	ΔP	Temp. °F	$\sqrt{\Delta P}$	Null Point Angle, Degrees	Port-Point #	ΔP	Temp. °F	$\sqrt{\Delta P}$	Null Point Angle, Degrees
1-1	.020	306			4-1	.02	373		
-2	.025	309			-2	.025	382		
-3	.025	324			-3	.015	384		
-4	.025	339			-4	.015	375		
2-1	.035	338							
-2	.040	367			5-1	.015	380		
-3	.045	374			-2	.015	384		
-4	.030	357			-3	.010	388		
					-4	.010	386		
3-1	.030	354							
-2	.035	365							
-3	.020	370							
-4	.015	343							
Average									

.44 x CO_2% + .32 x O_2% + .28 x N_2% = _____(Md)

(_____Md × _____1-Bws) + (18 ×_____Bws) = _____(Ms)

$$85.49 \times ___Cp \times \sqrt{\frac{(_____)Ts\ °R}{___Ms \times ___Ps}} \times ___ \sqrt{\Delta P} = ___ \text{ ft/sec } (Vs)$$

_____ Vs × _____ Flue Area × 60 = _____acfm

$$17.647 \times ____acfm \times \frac{Ps}{Ts\ °R} = _____ scfm \times 60 = _____ scfh$$

© Mostardi Platt

Volumetric Flow Rate Determination Field Data Sheet

Project Number: M133003
Date: 7/24/13
Client: UNIVERSITY OF IOWA
Test Number: POST 2 / PRE 3
Test Location: HURST BOILER OUTLET DUCT
Start Time: 1431
Source Condition:
End Time: 1442
Test Engineer: DT
Test Tech: AO

Duct Diameter _____ ft 3.5' x 5.5'
Upstream Disturbance, Diameters _____
Flue Area 19.250 ft²
Downstream Disturbance, Diameters _____
Port Length 6 "
Pitot ID 170 Pitot Coefficient (C_p) .840

P_{bar} 29.25 "Hg
CO_2 % 9.6
Wet Bulb Temp _____
Leak Checks Passed@
Static -.2 "H_2O
O_2 % 11.1
Dry Bulb Temp _____
Pre ✓.2 Inches H_2O
Static _____ "Hg
N_2 % _____
B_{ws} .182
Post ✓.2 Inches H_2O
P_s _____ "Hg
Meter No. CM6
Fluke # _____
Umbilical ID ___

Port-Point #	ΔP	Temp. °F	$\sqrt{\Delta P}$	Null Point Angle, Degrees	Port-Point #	ΔP	Temp. °F	$\sqrt{\Delta P}$	Null Point Angle, Degrees
1-1	.015	375			4-1	.035	357		
-2	.020	378			-2	.035	363		
-3	.020	381			-3	.035	361		
-4	.015	379			-4	.025	339		
2-1	.025	365			5-1	.02	311		
-2	.025	366			-2	.02	310		
-3	.020	366			-3	.015	300		
-4	.015	354			-4	.010	300		
3-1	.035	360							
-2	.035	362							
-3	.025	361							
-4	.020	351							
Average									

.44 x CO_2% + .32 x O_2% + .28 x N_2% = _____(Md)

(_____Md × _____1-Bws) + (18 ×_____Bws) = _____(Ms)

$$85.49 \times ___Cp \times \sqrt{\frac{(_____)Ts\ °R}{___Ms \times ___Ps}} \times ___ \sqrt{\Delta P} = ___ \text{ ft/sec } (Vs)$$

_____ Vs × _____ Flue Area × 60 = _____acfm

$$17.647 \times _____acfm \times \frac{Ps}{Ts\ °R} = _____ scfm \times 60 = _____ scfh$$

© Mostardi Platt

Volumetric Flow Rate Determination Field Data Sheet

Project Number: M133003 Date: 7/24/13
Client: UNIVERSITY OF IOWA Test Number: POST 3
Test Location: HURST BOILER OUTLET DUCT Start Time: 1606
Source Condition: End Time: 1616
Test Engineer: DT Test Tech: AO

Duct Diameter ____ ft 3.5'x5.5' Upstream Disturbance, Diameters ____
Flue Area 19.250 ft² Downstream Disturbance, Diameters ____
Port Length 6 " Pitot ID 170 Pitot Coefficient (C_p) .840

P_{bar} 29.25 "Hg CO_2 % 9.6 Wet Bulb Temp ____ Leak Checks Passed@
Static -.2 "H_2O O_2 % 11.1 Dry Bulb Temp ____ Pre ✓.2 Inches H_2O
Static ____ "Hg N_2 % ____ B_{ws} .178 Post ✓.2 Inches H_2O
P_s ____ "Hg Meter No. CM6 Fluke # ____ Umbilical ID ___

Port-Point #	ΔP	Temp. °F	$\sqrt{\Delta P}$	Null Point Angle, Degrees	Port-Point #	ΔP	Temp. °F	$\sqrt{\Delta P}$	Null Point Angle, Degrees
1-1	.01	387			4-1	.025	358		
-2	.015	388			-2	.035	360		
-3	.01	389			-3	.045	367		
-4	.01	374			-4	.030	348		
2-1	.02	376			5-1	.030	325		
-2	.025	377			-2	.030	328		
-3	.020	381			-3	.030	335		
-4	.015	366			-4	.025	322		
3-1	.035	378							
-2	.040	382							
-3	.030	384							
-4	.025	351							
Average									

.44 x CO_2% + .32 x O_2% + .28 x N_2% = _____(Md)

(_____Md × _____1-Bws) + (18 ×_____Bws) = _____(Ms)

$$85.49 \times ___Cp \times \sqrt{\frac{(_____)Ts\ °R}{___Ms \times ___Ps}} \times ___ \sqrt{\Delta P} = ___ \text{ ft/sec } (Vs)$$

_____ Vs × _____ Flue Area × 60 = _____acfm

$$17.647 \times ____acfm \times \frac{Ps}{Ts\ °R} = _____ scfm \times 60 = _____ scfh$$

© Mostardi Platt

MOISTURE FIELD DATA SHEET

Project Name/Number: UNIVERSITY OF IOWA M133003 Date: 7/24/13
Test Location: HURST BOILER DUCT Source Condition:
Test Method: Meter ID: CM6 Pre-Calibration Date:
Meter ΔH: 1.518 Meter Y: 1.006 Test Engineer: DT

Test (Run) No. 1 Barometric Pressure (P_{bar}) 29.25 in. Hg
Static Pressure: Stack Temperature: (From Method Test Data)
Gas Sample Analysis: %CO_2 %O_2

Clock Time 24 hour	Meter Volume (Vm) ft3 or L (Circle One)	Meter Gage Pressure (ΔH) in. H_2O	Meter Inlet Temp. (t_m) °F	Meter Outlet Temp. (t_m) °F	Impinger Outlet Temp °F	Meter Vacuum "Hg
1025	600.810	1.518	81	80	65	4
1030	604.360	1.518	84	81	64	4
1035	608.070	1.518	86	81	62	4
1040	611.570	1.518	88	82	60	4
1045	615.055	1.518	89	83	61	4
1050	618.623	1.518	90	83	59	4
1055	622.218	1.518	90	84	58	4
1100	625.837	1.518	90	84	59	4
1105	629.445	1.518	91	85	62	4
1110	633.100	1.518	91	85	65	4
		1.518	88	82.8		4

Total Vol. in ft3 (Vm)= 32.29 Multiply total volume collected in Liters by 0.035315 to convert to ft^3

Condensate
787.4 / 792.1 / 597.7 mls (V_f)
- 744.1 / 741.5 / 575.7 mls (V_i)
= 118.2 mls gained

Silica Gel or Train
876.1 grams (W_f)
- 851.9 grams (W_i)
= grams gained

Average Meter Temperature: 85.4
(average of both inlet and outlet if applicable)

.179 BWS

Comments:

Pre-Test Leak Check: 0 @ 10 "Hg
Post-Test Leak Check: 0 @ 6 "Hg

Test (Run) No. 2 Barometric Pressure (P_{bar}) 29.25 in. Hg
Static Pressure: Stack Temperature: (From Method Test Data)
Gas Sample Analysis: %CO_2 %O_2

Clock Time 24 hour	Meter Volume (Vm) ft3 or L (Circle One)	Meter Gage Pressure (ΔH) in. H_2O	Meter Inlet Temp. (t_m) °F	Meter Outlet Temp. (t_m) °F	Impinger Outlet Temp °F	Meter Vacuum "Hg
1231	634.263	1.518	87	87	66	4
1236	637.870	1.518	91	88	53	4
1241	641.029	1.518	94	88	51	4
1246	645.323	1.518	94	88	51	4
1251	649.015	1.518	95	88	53	4
1256	642.485	1.518	95	89	54	4
1301	645.950	1.518	95	89	54	4
1306	659.606	1.518	95	89	54	4
1311	663.020	1.518	95	89	55	5
1316	666.551	1.518	94	89	57	5
			93.5	88.4		

Total Vol. in ft^3 (V_m)= 32.288 Multiply total volume collected in Liters by 0.035315 to convert to ft^3

Condensate
810.8 / 775.8 / 648.6 mls (V_f)
- 712.5 / 744.1 / 644.5 mls (V_i)
= 134.3 mls gained

Silica Gel or Train
752.6 grams (W_f)
- 742.4 grams (W_i)
= 10.2 grams gained

Average Meter Temperature: 90.95
(average of both inlet and outlet if applicable)

.182 BWS

Comments:

Pre-Test Leak Check: 0 @ 10 "Hg
Post-Test Leak Check: 0 @ 7 "Hg

© Mostardi Platt

MOSTARDI PLATT

IMPINGER WEIGHT SHEET

PLANT: U of Iowa Oakdale

UNIT NO: Hurst Boiler

LOCATION: Outlet Duct

DATE: 7/24/13

TEST NO: 1

METHOD: 4

WEIGHED/MEASURED BY: JFK

BALANCE ID: 310-36

Circle One:	FINAL WEIGHT MLS / GRAMS	INITIAL WEIGHT MLS / GRAMS	IMPINGER GAIN	IMPINGER CONTENTS
IMPINGER 1	787.4	744.1		
IMPINGER 2	792.6	741.5		
IMPINGER 3	597.5	573.7		
IMPINGER 4	876.1	851.9		
IMPINGER 5				
IMPINGER 6				
IMPINGER 7				
IMPINGER 8				

	FINAL TOTAL	INITIAL TOTAL	TOTAL IMPINGER GAIN
IMPINGERS	2177.5	2059.3	118.2
SILICA	876.1	851.9	24.2

DS-005A Impinger Weight Sheet

© Mostardi Platt

MOSTARDI PLATT

IMPINGER WEIGHT SHEET

PLANT: U of Iowa - Oakdale

UNIT NO: Hurst Boiler

LOCATION: Outlet Duct

DATE: 7/24/13

TEST NO: 2

METHOD: 4

WEIGHED/MEASURED BY: JFR

BALANCE ID: 510-36

Circle One:	FINAL WEIGHT MLS / GRAMS	INITIAL WEIGHT MLS / GRAMS	IMPINGER GAIN	IMPINGER CONTENTS
IMPINGER 1	810.8	712.3		
IMPINGER 2	775.8	744.1		
IMPINGER 3	648.6	644.5		
IMPINGER 4	752.6	742.4		
IMPINGER 5				
IMPINGER 6				
IMPINGER 7				
IMPINGER 8				

	FINAL TOTAL	INITIAL TOTAL	TOTAL IMPINGER GAIN
IMPINGERS	2235.2	2100.9	134.3
SILICA	752.6	742.4	10.2

DS-005A Impinger Weight Sheet

© Mostardi Platt

MOISTURE FIELD DATA SHEET

Project Name/Number: UNIVERSITY OF IOWA M133003 Date: 7/24/13
Test Location: HURST BOILER EXHAUST DUCT Source Condition: _____
Test Method: 4 Meter ID: CM6 Pre-Calibration Date: _____
Meter ΔH: 1.518 Meter Y: 1.008 Test Engineer: DT

Test (Run) No. 3 Barometric Pressure (P_{bar}) 29.25 in. Hg
Static Pressure: -.2 Stack Temperature: _____ (From Method _____ Test Data)

Gas Sample Analysis: _____ %CO_2 _____ %O_2

Clock Time 24 hour	Meter Volume (Vm) ft3 or L (Circle One)	Meter Gage Pressure (ΔH) in. H_2O	Meter Inlet Temp. (t_m) °F	Meter Outlet Temp. (t_m) °F	Impinger Outlet Temp °F	Meter Vacuum "Hg
1446	666.721	1.581	90	89	64	5
1451	670.300	1.581	91	89	63	5
1456	673.740	1.581	92	89	63	5
1501	677.015	1.581	94	89	66	5
1506	681.243	1.581	95	90	64	5
1511	684.180	1.581	95	90	63	5
1516	688.057	1.581	95	90	61	5
1521	691.340	1.581	96	90	60	5
1526	695.239	1.581	96	91	61	5
1531	699.207	1.581	96	91	61	5
		1.581	94.0	89.8		5
Total Vol. in ft3 (Vm)=	32.486	Multiply total volume collected in Liters by 0.035315 to convert to ft^3				

Condensate

700.2 / 712.4 / 581.7 mls (V_f)
- 670.1 / 702.5 / 576 mls (V_i)
= 131.7 mls gained

Silica Gel or Train

843.1 grams (W_f)
- 833.0 grams (W_i)
= 10.1 grams gained

Average Meter Temperature: 91.9
(average of both inlet and outlet if applicable)

.178 BWS

Comments:

Pre-Test Leak Check: OK @ 10 "Hg
Post-Test Leak Check: OK @ 7 "Hg

Test (Run) No. _____ Barometric Pressure (P_{bar}) _____ in. Hg
Static Pressure: _____ Stack Temperature: _____ (From Method _____ Test Data)

Gas Sample Analysis: _____ %CO_2 _____ %O_2

Clock Time 24 hour	Meter Volume (Vm) ft3 or L (Circle One)	Meter Gage Pressure (ΔH) in. H_2O	Meter Inlet Temp. (t_m) °F	Meter Outlet Temp. (t_m) °F	Impinger Outlet Temp °F	Meter Vacuum "Hg
Total Vol. in ft^3 (V_m)=		Multiply total volume collected in Liters by 0.035315 to convert to ft^3				

Condensate

____ / ____ / ____ mls (V_f)
- ____ / ____ / ____ mls (V_i)
= _____ mls gained

Silica Gel or Train

_____ grams (W_f)
- _____ grams (W_i)
= _____ grams gained

Average Meter Temperature: _____
(average of both inlet and outlet if applicable)

Comments:

Pre-Test Leak Check: _____ @ _____ "Hg
Post-Test Leak Check: _____ @ _____ "Hg

© Mostardi Platt

MOSTARDI PLATT

IMPINGER WEIGHT SHEET

PLANT: U of Iowa - Oakdale

UNIT NO: Hurst Boiler

LOCATION: Outlet Duct

DATE: 7/24/13

TEST NO: 3

METHOD: 4

WEIGHED/MEASURED BY: JFK

BALANCE ID: 510-36

Circle One:	FINAL WEIGHT MLS / GRAMS	INITIAL WEIGHT MLS / GRAMS	IMPINGER GAIN	IMPINGER CONTENTS
IMPINGER 1	766.2	670.1		
IMPINGER 2	772.4	742.5		
IMPINGER 3	581.7	576.0		
IMPINGER 4	863.1	853.0		
IMPINGER 5				
IMPINGER 6				
IMPINGER 7				
IMPINGER 8				

	FINAL TOTAL	INITIAL TOTAL	TOTAL IMPINGER GAIN
IMPINGERS	2120.2	1988.6	131.7
SILICA	863.1	853.0	10.1

DS-005A Impinger Weight Sheet

© Mostardi Platt

Isokinetic Sampling Cover Sheet

Test Engineer: DT
Test Technician: AO

Plant Information

Run Number: 1
Date: 7/23/13
Project Number: M133003
Test Location: BOILER OUTLET DUCT
Client Name: UNIVERSITY OF IOWA
Plant Name: HURST BOILER PLANT
Duct Shape: Circular or Rectangular
Length: 5.5 Width: 3.5 or Diameter:
Flue Area: 19.250
Upstream Diameters: >0.5
Downstream Diameters: >2.0
Port Type: FLANGE
Port Length: 6
Port Diameter: 6
Test Method: 5/202
Source Condition:

Meter and Probe Data

Meter ID: GM6
Meter Y Value: 1.006
ΔH Value: 1.518
Pitot ID: 203
Pitot Coefficient: .840
Train Type: HOT BOX
Nozzle Kit ID 55 7
Nozzle Diameter: .495
Filter Number/Weight: 6093
Probe Length: 4'
Probe Liner: GLASS
Thimble Number/Weight:
Pre-Test Nozzle Leak Check: 0.000 @ 10 "Hg
Post-Test Nozzle Leak Check: .006 @ 5 "Hg
Pre-Test Pitot Leak Check: ok @ .2 "H_2O
Post-Test Pitot Leak Check: OK @ .2 "H_2O

Traverse Data

Ports Sampled: 5
Points/Port: 5
Min/Point: 6
Total Points: 25
Total Test Time: 150 MIN
Sample Plane: Horizontal or Vertical

Stack Parameters

Barometric Pressure: 29.3
Static Pressure: -.1
CO_2 %: / / / Avg. 10.9
O_2 %: / / /Avg. 9.8
Determined by: Method 3 or Method 3A
Imp and/or silica balance Model and S/N: 510-36
Servomex Serial #: 0144001/4446
Initial Imp. Volume or Weight: 1937.5
Final Imp. Volume or Weight: 2205.4
Imp. Volume or Weight Gain: 267.9
Initial Silica Weight: 823.8
Final Silica Weight: 844.3
Silica Weight Gain: 20.5

Comments:

Post-Test Nozzle Verification: 1)____ 2)____ 3)____ 4)____

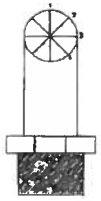

DS-004 Method 5 Cover Sheet

© Mostardi Platt

Isokinetic Sampling Field Data Sheet-M202

Project Number: M133003 Date: 7/23/13 Test Number: 1

Client: UNIVERSITY OF IOWA Test Location: BOILER OUTLET DUCT Operator: DT Test Tech: AD

Plant: HURST BOILER PLANT Test Method: 5 1202 Page Number: 1 of 2

Port-Point #.	Time	(ΔP)	Orifice Setting (ΔH)	Meter Volume (V_m) ft^3, Actual	Square Root, ΔP	Meter Rate, Cubic Feet/ Min.	Theoretical Meter Volume, (V_m) ft^3, per point	Theoretical Meter Volume, (V_m) ft^3, total	Stack Temp, °F	Meter Temp Inlet, °F	Meter Temp Outlet, °F	Pump Vacuum, " Hg	Probe Temp. °F	Filter Temp. °F	CPM Filter Temp. °F	Impinger Outlet Well Temp °F
1-1	1205	.015	0.4	371.873	.122	.403	1.209		379	89	88	1	254	251	85	67
-1	1208	.015	0.4	373.10	.122	.403	1.209	373.082	379	89	88	1	254	251	85	65
-2	1211	.015	0.4	374.32	.122	.403	1.209	374.291	378	90	89	1	253	250	85	65
-2	1214	.015	0.4	375.51	.122	.403	1.209	375.500	378	90	89	1	253	251	85	64
-3	1217	.015	0.4	376.72	.122	.403	1.209	376.709	377	91	89	1	252	253	85	63
-3	1220	.015	0.4	377.93	.122	.403	1.209	377.918	377	91	89	1	250	251	85	63
-4	1223	.01	0.3	379.14	.100	.329	.987	379.127	373	92	89	1	253	251	85	61
-4	1226	.01	0.3	380.22	.100	.329	.987	380.114	373	92	89	1	252	251	85	61
-5	1229	.01	0.3	381.10	.100	.329	.987	381.101	372	92	89	1	251	251	84	59
-5	1232	.01	0.3	382.26	.100	.329	.987	382.088	372	92	89	1	250	252	84	59
	1235			383.490				383.075								
2-1	1240	.025	0.7	383.490	.158	.520	1.561		368	92	90	1	252	251	85	55
-1	1243	.025	0.7	385.08	.158	.520	1.561	385.051	368	92	90	1	253	250	85	55
-2	1246	.02	0.55	386.65	.141	.465	1.396	386.612	364	94	90	1	254	251	82	54
-2	1249	.02	0.55	388.12	.141	.465	1.396	388.008	364	94	90	1	253	251	82	54
-3	1252	.015	0.4	389.91	.122	.403	1.209	389.404	365	94	91	1	253	251	80	54
-3	1255	.015	0.4	390.61	.122	.403	1.209	390.613	365	94	91	1	252	251	80	54
-4	1258	.015	0.4	391.83	.122	.403	1.209	391.822	366	94	91	1	252	251	80	54
-4	1301	.015	0.4	393.05	.122	.403	1.209	393.031	366	94	91	1	253	250	80	54
-5	1304	0.01	0.3	394.26	.100	.329	.987	394.240	367	94	91	1	253	251	81	54
-5	1307	0.01	0.3	395.24	.100	.329	.987	395.227	367	94	91	1	253	251	81	54
	1310			396.658				396.214								
3-1	1315	.03	0.8	396.658	.173	.575	1.726		363	94	91	1	253	251	81	52
-1	1318	.03	0.8	398.40	.173	.575	1.726	398.384	363	94	91	1	253	250	81	52
-2	1321	.03	0.8	400.13	.173	.575	1.726	400.110	362	94	91	1	253	252	80	52
-2	1324	.03	0.8	401.84	.173	.575	1.726	401.836	362	94	91	1	252	252	80	52
-3	1327	.03	0.8	403.60	.173	.575	1.726	403.562	365	95	91	1	254	250	78	53
-3	1336	.03	0.8	405.30	.173	.575	1.726	405.288	365	95	91	1	253	251	78	53

© Mostardi Platt

Isokinetic Sampling Field Data Sheet-M202

Project Number: M133003 Date: 7/23/13 Test Number: 1

Client: UNIVERSITY OF IOWA Test Location: BOILER OUTLET DUCT Operator: DT Test Tech: AD

Plant: HURST BOILER PLANT Test Method: 5 1202 Page Number: 2 of 2

Port-Point #.	Time	(ΔP)	Orifice Setting (ΔH)	Meter Volume (V_m) ft^3, Actual	Square Root, ΔP	Meter Rate, Cubic Feet/ Min.	Theoretical Meter Volume, (V_m) ft^3, per point	Theoretical Meter Volume, (V_m) ft^3, total	Stack Temp, °F	Meter Temp Inlet, °F	Meter Temp Outlet, °F	Pump Vacuum, " Hg	Probe Temp. °F	Filter Temp. °F	CPM Filter Temp. °F	Impinger Outlet Well Temp °F
3-4	1333	.02	0.6	407.14	.141	.470	1.409	407.014	345	95	92	2	253	251	78	54
-4	1336	.02	0.6	408.42	.141	.470	1.409	408.423	345	95	92	2	253	252	78	54
-5	1339	.015	0.4	409.84	.122	.407	1.220	409.832	347	95	92	2	252	251	78	54
-5	1342	.015	0.4	411.07	.122	.407	1.220	411.052	347	95	92	2	252	251	78	54
	1345			412.510				412.272								
4-1	1353	.035	1.0	412.510	.187	.621	1.863		361	93	92	4	253	251	82	55
-1	1356	.035	1.0	414.39	.187	.621	1.863	414.374	361	93	92	4	252	250	82	55
-2	1359	.035	1.0	416.25	.187	.621	1.863	416.237	364	94	92	4	253	251	80	55
-2	1402	.035	1.0	418.13	.187	.621	1.863	418.100	364	94	92	4	254	251	80	55
-3	1405	.04	1.1	419.97	.200	.664	1.993	419.963	364	96	92	4	253	250	78	58
-3	1408	.04	1.1	421.96	.200	.664	1.993	421.956	364	96	92	4	252	252	78	58
-4	1411	.03	0.8	423.98	.173	.575	1.726	423.949	357	96	92	3	253	252	78	59
-4	1414	.03	0.8	425.69	.173	.575	1.726	425.675	357	96	92	3	252	252	78	59
-5	1417	.03	0.8	427.43	.173	.575	1.726	427.401	359	96	92	3	253	251	78	60
-5	1420	.03	0.8	429.15	.173	.575	1.726	429.127	359	96	92	3	251	250	78	60
	1423			430.965				430.853								
5-1	1431	.025	0.7	430.965	.158	.535	1.605		323	94	92	3	253	251	83	61
-1	1434	.025	0.7	432.59	.158	.535	1.605	432.570	323	94	92	3	252	251	83	61
-2	1437	.025	0.7	434.20	.158	.535	1.605	434.175	323	95	92	3	252	251	81	58
-2	1440	.025	0.7	435.80	.158	.535	1.605	435.780	323	95	92	3	252	251	81	58
-3	1443	.02	0.6	437.39	.141	.478	1.435	437.385	321	95	92	2	253	251	80	58
-3	1446	.02	0.6	438.83	.141	.478	1.435	438.820	321	95	92	2	252	251	80	58
-4	1449	.025	0.7	440.26	.141	.478	1.605	440.255	354	95	92	2	252	251	79	58
-4	1452	.025	0.7	441.88	.141	.478	1.605	441.860	354	95	92	2	252	251	79	58
-5	1455	.03	0.9	443.47	.173	.586	1.758	443.465	365	95	92	3	253	251	79	58
-5	1458	.03	0.9	445.22	.173	.586	1.758	445.223	365	95	92	3	254	252	79	58
	1501			447.021				446.981								

© Mostardi Platt

MOSTARDI PLATT

IMPINGER WEIGHT SHEET

PLANT: UNIVERSITY OF IOWA

UNIT NO: HURST BOILER

LOCATION: EXHAUST DUCT

DATE: 7/23/13

TEST NO: 1

METHOD: 5/202

WEIGHED/MEASURED BY: JFR

BALANCE ID: 510-36

Circle One:	FINAL WEIGHT MLS / GRAMS	INITIAL WEIGHT MLS / GRAMS	IMPINGER GAIN	IMPINGER CONTENTS
IMPINGER 1	863.8	590.9		BLANK
IMPINGER 2	650.0	651.1		BLANK
IMPINGER 3	691.4	695.5		DI H2O
IMPINGER 4	844.3	823.8		SILICA
IMPINGER 5				
IMPINGER 6				
IMPINGER 7				
IMPINGER 8				

	FINAL TOTAL	INITIAL TOTAL	TOTAL IMPINGER GAIN
IMPINGERS	2205.7	1937.5	267.9
SILICA	844.3	823.8	20.5

DS-005A Impinger Weight Sheet

© Mostardi Platt

Isokinetic Sampling Cover Sheet

Test Engineer: DT
Test Technician: AO

Plant Information

Run Number: 2
Date: 7/23/13
Project Number: M133003
Test Location: BOILER OUTLET DUCT
Client Name: UNIVERSITY OF IOWA
Plant Name: HURST BOILER PLANT
Duct Shape: Circular or Rectangular
Length: _____ Width: _____ or Diameter: _____
Flue Area: 19.258
Upstream Diameters: 70.5
Downstream Diameters: 72.0
Port Type: FLANGE
Port Length: 6"
Port Diameter: 6"
Test Method: _____
Source Condition: _____

Meter and Probe Data

Meter ID: CM6
Meter Y Value: 1.006
ΔH Value: 1.518
Pitot ID: 203
Pitot Coefficient: .840
Train Type: HOT BOX
Nozzle Kit ID SS #7
Nozzle Diameter: .495
Filter Number/Weight: 6092/
Probe Length: 41
Probe Liner: GLASS
Thimble Number/Weight: _____
Pre-Test Nozzle Leak Check: 0.008 @ 10 "Hg
Post-Test Nozzle Leak Check: 0.003 @ 5 "Hg
Pre-Test Pitot Leak Check: OK @ .2 "H_2O
Post-Test Pitot Leak Check: OK @ .2 "H_2O

Traverse Data

Ports Sampled: 5
Points/Port: 5
Min/Point: 5
Total Points: 25
Total Test Time: 125 MIN
Sample Plane: Horizontal or Vertical

Stack Parameters

Barometric Pressure: 29.3
Static Pressure: -.1
CO_2 %: ___/___/___/ Avg. 10.2
O_2 %: ___/___/___/Avg. 10.5
Determined by: Method 3 or Method 3A
Imp and/or silica balance Model and S/N: 510-36
Servomex Serial #: 014401/4446
Initial Imp. Volume or Weight: 1929.4
Final Imp. Volume or Weight: 2158.5
Imp. Volume or Weight Gain: 229.1
Initial Silica Weight: 820.5
Final Silica Weight: 837.4
Silica Weight Gain: 16.9

Comments:

Post-Test Nozzle Verification: 1)_____ 2)_____ 3)_____ 4)_____

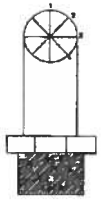

DS-004 Method 5 Cover Sheet

© Mostardi Platt

Isokinetic Sampling Field Data Sheet-M202

Project Number: M133003 Date: 7/23/13 Test Number: 2

Client: UNIVERSITY OF IOWA Test Location: BOILER OUTLET DUCT Operator: DT Test Tech: AO

Plant: HURST BOILER PLANT Test Method: 5 /202 Page Number: 1 of 2

Port-Point #.	Time	(ΔP)	Orifice Setting (ΔH)	Meter Volume (V_m) ft^3, Actual	Square Root, ΔP	Meter Rate, Cubic Feet/ Min.	Theoretical Meter Volume, (V_m) ft^3, per point	Theoretical Meter Volume, (V_m) ft^3, total	Stack Temp, °F	Meter Temp Inlet, °F	Meter Temp Outlet, °F	Pump Vacuum, " Hg	Probe Temp. °F	Filter Temp. °F	CPM Filter Temp. °F	Impinger Outlet Well Temp °F
1-1	1630	.02	0.55	450.145	.141	.465	1.395		392	91	91	2	251	249	85	67
	1633			451.590				451.540								
-1	1700	.015	0.41	451.590	.122	.403	1.208		374	92	92	2	253	250	85	64
-2	1703	.015	0.41	452.80	.122	.403	1.208	452.798	376	93	92	2	253	251	84	65
-2	1706	.015	0.41	454.12	.122	.403	1.208	454.006	376	93	92	2	252	251	83	62
-3	1709	.010	0.3	455.37	.100	.329	0.986	455.214	361	93	92	1	253	250	82	62
-3	1712	.010	0.3	456.21	.100	.329	0.986	456.200	361	93	92	1	253	250	82	63
-4	1715	.010	0.3	457.30	.100	.329	0.986	457.186	369	93	92	1	253	250	80	62
-4	1718	.010	0.3	458.37	.100	.329	0.986	458.172	369	93	92	1	252	251	80	62
-5	1721	.010	0.3	459.19	.100	.329	0.986	459.158	369	93	92	1	251	251	79	61
5	1724	.010	0.3	460.15	.100	.329	0.986	460.144	369	93	92	1	253	250	79	61
	1727			461.168				461.13								
2-1	1733	.02	0.55	461.168	.141	.465	1.395		370	93	92	2	253	251	81	66
-1	1736	.02	0.55	462.61	.141	.465	1.395	462.563	370	93	92	2	252	250	81	66
-2	1739	.02	0.55	463.97	.141	.465	1.395	463.958	373	94	92	2	252	251	77	59
-2	1742	.02	0.55	465.38	.141	.465	1.395	465.353	373	94	92	2	253	251	77	59
-3	1745	.02	0.55	466.75	.141	.465	1.395	466.748	369	95	92	2	254	250	76	59
-3	1748	.02	0.55	468.18	.141	.465	1.395	468.143	369	95	92	2	253	251	76	59
-4	1751	.015	0.41	469.54	.122	.403	1.208	469.538	367	95	92	2	252	251	76	60
-4	1754	.015	0.41	470.75	.122	.403	1.208	470.746	367	95	92	2	253	251	76	60
-5	1757	.01	0.3	471.96	.100	.329	0.986	471.954	366	95	93	1	254	250	77	65
-5	1800	.01	0.3	472.95	.100	.329	0.986	472.940	366	95	93	1	252	251	77	65
	1803			474.030				473.926								
3-1	1808	.025	0.7	474.030	.158	.526	1.578		366	94	93	3	253	250	80	64
-1	1811	.025	0.7	475.62	.158	.526	1.578	475.608	366	94	93	3	252	251	80	64
-2	1814	.025	0.7	477.20	.158	.526	1.578	477.186	365	95	93	3	254	251	73	55
-2	1817	.025	0.7	478.76	.158	.526	1.578	478.764	365	95	93	3	253	250	73	55
-3	1820	.025	0.7	480.35	.158	.526	1.578	480.342	367	96	93	3	252	251	70	54

© Mostardi Platt

Isokinetic Sampling Field Data Sheet-M202

Project Number: M133003 Date: 7/23/13 Test Number: 2

Client: UNIVERSITY OF IOWA Test Location: BOILER OUTLET DUCT Operator: DT Test Tech: AD

Plant: HURST BOILER PLANT Test Method: 5 /202 Page Number: 2 of 2

Port-Point #.	Time	(ΔP)	Orifice Setting (ΔH)	Meter Volume (V_m) ft^3, Actual	Square Root, ΔP	Meter Rate, Cubic Feet/ Min.	Theoretical Meter Volume, (V_m) ft^3, per point	Theoretical Meter Volume, (V_m) ft^3, total	Stack Temp, °F	Meter Temp Inlet, °F	Meter Temp Outlet, °F	Pump Vacuum, " Hg	Probe Temp. °F	Filter Temp. °F	CPM Filter Temp. °F	Impinger Outlet Well Temp °F
3-3	1823	.025	0.7	481.93	.158	.526	1.578	481.920	367	96	93	3	251	252	70	54
-4	1826	.015	0.42	483.50	.122	.407	1.222	483.498	362	96	93	2	251	253	70	55
-4	1829	.015	0.42	484.73	.122	.407	1.222	484.720	362	96	93	2	252	253	70	55
-5	1832	.010	0.3	485.96	.100	.333	.998	485.942	360	96	94	1	253	252	75	60
-5	1835	.010	0.3	486.97	.100	.333	.998	486.940	360	96	94	1	252	251	75	60
	1838			488.085				487.938								
4-1	1845	.03	0.83	488.085	.173	.576	1.729		366	94	93	3	252	251	77	62
-1	1848	.03	0.83	489.82	.173	.576	1.729	489.814	366	94	93	3	253	252	77	62
-2	1851	.03	0.83	491.60	.173	.576	1.729	491.543	366	96	93	3	254	251	70	54
-2	1854	.03	0.83	493.28	.173	.576	1.729	493.272	366	96	93	3	252	250	70	54
-3	1857	.035	0.97	495.17	.187	.622	1.867	495.001	364	96	93	4	253	251	68	54
-3	1900	.035	0.97	496.88	.187	.622	1.867	496.868	364	96	93	4	252	252	68	54
-4	1903	.035	0.97	498.74	.187	.622	1.867	498.735	366	97	94	4	252	253	68	55
-4	1906	.035	0.97	500.63	.187	.622	1.867	500.602	366	97	94	4	251	252	68	55
-5	1909	.03	0.83	502.47	.173	.576	1.729	502.469	361	97	94	3	253	250	69	55
-5	1912	.03	0.83	504.20	.173	.576	1.729	504.198	361	97	94	3	252	251	69	55
	1915			506.065				505.927								
5-1	1924	.02	.58	506.065	.141	.481	1.442		317	95	94	2	252	250	74	61
-1	1927	.02	.58	507.51	.141	.481	1.442	507.507	317	95	94	2	253	251	74	61
-2	1930	.02	.58	508.99	.141	.481	1.442	508.949	312	96	94	2	252	250	74	61
-2	1933	.02	.58	510.42	.141	.481	1.442	510.391	312	96	94	2	252	250	74	61
-3	1936	.02	.58	511.85	.141	.481	1.442	511.833	332	96	94	2	254	250	74	62
-3	1939	.02	.58	513.27	.141	.481	1.442	513.275	332	96	94	2	253	252	74	62
-4	1942	.02	.58	514.71	.141	.481	1.442	514.717	335	96	94	2	252	251	74	64
-4	1945	.02	.58	516.20	.141	.481	1.442	516.159	335	96	94	2	253	250	74	64
-5	1948	.015	.44	517.63	.122	.416	1.249	517.601	334	96	94	2	254	251	75	66
-5	1951	.015	.44	518.88	.122	.416	1.249	518.850	334	96	94	2	253	251	75	66
	1954			520.235				520.099								

© Mostardi Platt

MOSTARDI PLATT

IMPINGER WEIGHT SHEET

PLANT: UNIVERSITY OF IOWA

UNIT NO: HURST BOILER

LOCATION: EXHAUST BOILER

DATE: 7/23/13

TEST NO: 2

METHOD: 5/202

WEIGHED/MEASURED BY: JFR

BALANCE ID: 510-36

Circle One:	FINAL WEIGHT MLS / GRAMS	INITIAL WEIGHT MLS / GRAMS	IMPINGER GAIN	IMPINGER CONTENTS
IMPINGER 1	816.3	587.9		BLANK
IMPINGER 2	653.1	652.0		BLANK
IMPINGER 3	689.1	689.5		DI H2O
IMPINGER 4	837.4	820.5	820.5	SILICA
IMPINGER 5				
IMPINGER 6				
IMPINGER 7				
IMPINGER 8				

853.4

	FINAL TOTAL	INITIAL TOTAL	TOTAL IMPINGER GAIN
IMPINGERS	2158.5	1929.4	229.1

	FINAL TOTAL	INITIAL TOTAL	TOTAL SILICA GAIN
SILICA	837.4	820.5	16.9

818 924

© Mostardi Platt

Isokinetic Sampling Cover Sheet

Test Engineer: DT
Test Technician: AD

Plant Information

Run Number: 3
Date: 7/23/13 & 7/24/13
Project Number: M133003
Test Location: BOILER OUTLET DUCT
Client Name: UNIVERSITY OF IOWA
Plant Name: HURST BOILER PLANT
Duct Shape: Circular or Rectangular
Length: _____ Width: _____ or Diameter: _____
Flue Area: 19.250
Upstream Diameters: >0.5
Downstream Diameters: >2.0
Port Type: FLANGE
Port Length: 6"
Port Diameter: 6"
Test Method: 5/202
Source Condition: _____

Meter and Probe Data

Meter ID: CM6
Meter Y Value: 1.006
ΔH Value: 1.518
Pitot ID: 203
Pitot Coefficient: 0.840
Train Type: HOT BOX
Nozzle Kit ID: SS#7
Nozzle Diameter: .495
Filter Number/Weight: 6101 / 0.4626
Probe Length: 4'
Probe Liner: GLASS
Thimble Number/Weight: _____
Pre-Test Nozzle Leak Check: 0.005 @ 10 "Hg
Post-Test Nozzle Leak Check: _____ @ _____ "Hg
Pre-Test Pitot Leak Check: OK @ .2 "H_2O
Post-Test Pitot Leak Check: _____ "H_2O

Traverse Data

Ports Sampled: 5
Points/Port: 5
Min/Point: 5
Total Points: 25
Total Test Time: 125
Sample Plane: Horizontal or Vertical

Stack Parameters

Barometric Pressure: 29.3
Static Pressure: -.1
CO_2 %: / / / Avg. 10.4
O_2 %: / / / Avg. 10.3
Determined by: Method 3 or Method 3A
Imp and/or silica balance Model and S/N: 510-36
Servomex Serial #: 0144001/4446
Initial Imp. Volume or Weight: 1814.9
Final Imp. Volume or Weight: 2145.9
Imp. Volume or Weight Gain: 331.0
Initial Silica Weight: 813.4
Final Silica Weight: 833.7
Silica Weight Gain: 20.3

Comments:

Post-Test Nozzle Verification: 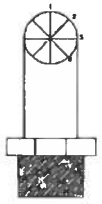 1)_____ 2)_____ 3)_____ 4)_____

DS-004 Method 5 Cover Sheet

© Mostardi Platt

Isokinetic Sampling Field Data Sheet-M202

Project Number: M133003 Date: 7/23/13 & 7/24/13 Test Number: 3

Client: UNIVERSITY OF IOWA Test Location: BOILER OUTLET DUCT Operator: DT Test Tech: MD

Plant: HURST BOILER PLANT Test Method: 5 /202 Page Number: 1 of 2

Port-Point #.	Time	(ΔP)	Orifice Setting (ΔH)	Meter Volume (V_m) ft^3, Actual	Square Root, ΔP	Meter Rate, Cubic Feet/ Min.	Theoretical Meter Volume, (V_m) ft^3, per point	Theoretical Meter Volume, (V_m) ft^3, total	Stack Temp, °F	Meter Temp Inlet, °F	Meter Temp Outlet, °F	Pump Vacuum, " Hg	Probe Temp. °F	Filter Temp. °F	CPM Filter Temp. °F	Impinger Outlet Well Temp °F
1-1	2118	.015	.41	521.550	.122	.402	1.205		379	91	91	1	252	254	85	67
-1	2121	.015	.41	522.77	.122	.402	1.205	522.755	379	91	91	1	253	253	85	67
-2	2124	.015	.41	523.98	.122	.402	1.205	523.960	373	91	91	1	252	253	85	65
-2	2127	.015	.41	525.17	.122	.402	1.205	525.165	373	91	91	1	253	253	85	65
-3	2130	.015	.41	526.40	.122	.402	1.205	526.370	378	92	91	1	252	251	85	64
-3	2133	.015	.41	527.58	.122	.402	1.205	527.575	378	92	91	1	252	251	85	64
-4	2136	.015	.41	528.82	.122	.402	1.205	528.780	381	92	91	1	252	250	85	63
-4	2139	.015	.41	530.06	.122	.402	1.205	529.985	381	92	91	1	251	251	85	63
-5	2142	.010	.3	531.22	.100	.328	.984	531.190	382	92	91	1	252	252	85	66
-5	2145	.010	.3	532.19	.100	.328	.984	532.174	382	92	91	1	251	250	85	66
	2148			533.213				533.158								
2-1	2151	0.03	.82	533.213	.173	.568	1.704		381	92	91	3	251	250	84	61
-1	2154	0.03	.82	534.91	.173	.568	1.704	534.917	381	92	91	3	252	251	84	61
-2	2157	0.03	.82	536.64	.173	.568	1.704	536.621	378	93	91	3	253	254	82	60
-2	2200	0.03	.82	538.35	.173	.568	1.704	538.325	378	93	91	3	252	253	82	60
-3	2203	0.025	.68	540.04	.158	.518	1.555	540.029	383	93	91	3	253	250	81	60
-3	2206	0.025	.68	541.61	.158	.518	1.555	541.584	383	93	91	3	252	251	81	60
-4	2209	0.020	.55	543.14	.141	.464	1.391	543.139	376	93	91	2	251	250	81	62
-4	2212	0.020	.55	544.55	.141	.464	1.391	544.530	376	93	91	2	250	252	81	62
-5	2215	0.015	.41	545.94	.122	.402	1.205	545.921	381	93	90	1	252	250	81	64
-5	2218	0.015	.41	547.13	.122	.402	1.205	547.126	381	93	90	1	253	251	81	64
	2221			548.368				548.331								
3-1	2224	0.03	.83	548.368	.173	.573	1.719		374	92	90	3	251	251	82	64
-1	2227	0.03	.83	550.10	.173	.573	1.719	550.087	374	92	90	3	252	251	82	64
-2	2230	0.03	.83	551.81	.173	.573	1.719	551.806	376	92	90	3	251	250	79	59
-2	2233	0.03	.83	553.63	.173	.573	1.719	553.525	376	92	96	3	253	252	79	59
-3	2236	0.035	.97	555.26	.187	.619	1.857	555.244	379	93	90	4	252	250	78	57
-3	2239	0.035	.97	557.29	.187	.619	1.857	557.101	379	93	90	4	251	251	78	57

© Mostardi Platt

Isokinetic Sampling Field Data Sheet-M202

Project Number: M133003 Date: 7/23/13 & 7/24/13 Test Number: 3

Client: UNIVERSITY OF IOWA Test Location: BOILER OUTLET DUCT Operator: DT Test Tech: AD

Plant: HURST BOILER PLANT Test Method: 5 /202 Page Number: 2 of 2

Port-Point #.	Time	(ΔP)	Orifice Setting (ΔH)	Meter Volume (V_m) ft^3, Actual	Square Root, ΔP	Meter Rate, Cubic Feet/ Min.	Theoretical Meter Volume, (V_m) ft^3, per point	Theoretical Meter Volume, (V_m) ft^3, total	Stack Temp, °F	Meter Temp Inlet, °F	Meter Temp Outlet, °F	Pump Vacuum, " Hg	Probe Temp. °F	Filter Temp. °F	CPM Filter Temp. °F	Impinger Outlet Well Temp °F
3-4	2242	0.03	.83	559.00	.173	.573	1.719	558.958	374	93	90	4	254	251	77	56
-4	2245	0.03	.83	560.72	.173	.573	1.719	560.677	374	93	90	4	253	252	77	56
-5	2248	0.025	.70	562.43	.158	.523	1.570	562.396	372	93	90	3	252	251	77	57
-5	2251	0.025	.70	563.98	.158	.523	1.570	563.966	372	93	90	3	253	250	77	57
	2254			565.777				565.536								
4-1	2259	.040	1.11	565.777	.200	.660	1.979		382	92	90	5	251	250	78	55
-1	2302	.040	1.11	567.79	.200	.660	1.979	567.756	382	92	90	5	252	251	78	55
-2	2305	.045	1.24	569.74	.212	.700	2.099	569.735	380	93	89	5	253	252	76	53
-2	2308	.045	1.24	571.87	.212	.700	2.099	571.834	380	93	89	5	252	251	76	53
-3	2311	.040	1.11	573.98	.200	.660	1.979	573.933	379	93	89	5	253	251	75	53
-3	2314	.040	1.11	575.92	.200	.660	1.979	575.912	379	93	89	5	251	250	75	53
-4	2317	.040	1.11	577.90	.200	.660	1.979	577.891	377	93	89	5	253	250	75	53
-4	2320	.040	1.11	579.88	.200	.660	1.979	579.870	377	93	89	5	252	250	75	53
-5	2323	.040	1.11	581.86	.200	.660	1.979	581.849	377	93	89	5	252	250	74	53
-5	2326	.040	1.11	583.84	.200	.660	1.979	583.828	377	93	89	5	251	251	74	53
	2329			585.807				585.807								
5-1	2335	.02	.57	585.867	.141	.475	1.426		319	90	89	3	250	250	76	53
-1	2338	.02	.57	587.31	.141	.475	1.426	587.293	319	90	89	3	251	250	76	53
-2	2341	.02	.57	588.75	.141	.475	1.426	588.719	324	91	89	3	252	251	75	51
-2	2344	.02	.57	590.21	.141	.475	1.426	590.145	324	91	89	3	251	250	75	51
-3	2347	.02	.57	591.60	.141	.475	1.426	591.571	322	91	89	3	253	252	75	51
-3	2350	.02	.57	593.04	.141	.475	1.426	592.997	322	91	89	3	252	251	75	51
-4	2353	.025	.72	594.45	.158	.531	1.594	594.423	317	91	89	3	254	250	75	51
-4	2356	.025	.72	596.23	.158	.531	1.594	596.017	317	91	89	3	252	251	75	51
-5	2359	.02	.57	597.68	.141	.475	1.426	597.611	316	91	88	3	254	251	75	51
-5	0002	.02	.57	599.19	.141	.475	1.426	599.037	316	91	88	3	253	250	75	51
	0005			600.513				600.463								

© Mostardi Platt

DS-005B 202 Field Data Sheet

MOSTARDI PLATT

IMPINGER WEIGHT SHEET

PLANT: UNIVERSITY

UNIT NO: HURST BOILER

LOCATION: EXHAUST DUCT

DATE: 7/23/13 & 7/24/13

TEST NO: 3

METHOD: 5/202

WEIGHED/MEASURED BY: JFR

BALANCE ID: S/N - 36

Circle One:	FINAL WEIGHT MLS / GRAMS	INITIAL WEIGHT MLS / GRAMS	IMPINGER GAIN	IMPINGER CONTENTS
IMPINGER 1	857.6	535.8		BLANK
IMPINGER 2	594.6	586.7		BLANK
IMPINGER 3	693.7	692.4		DI H2O
IMPINGER 4	833.7	813.4		SILICA
IMPINGER 5				
IMPINGER 6				
IMPINGER 7				
IMPINGER 8				

	FINAL TOTAL	INITIAL TOTAL	TOTAL IMPINGER GAIN
IMPINGERS	2145.9	1814.9	331.0
SILICA	833.7	813.4	20.3

1124

1230

DS-005A Impinger Weight Sheet

© Mostardi Platt

MULTI METHOD NON-ISOKINETIC FIELD DATA SHEET

Project Name/Number: M133003 Date: 7/23/13
Test Location: Univ. of Iowa Source Condition:
Test Method: M26 Meter ID: M13 A Pre-Calibration Date: 6/14/13
Meter ΔH: Meter Y: 1.009 Test Engineer: MD

Test (Run) No. 1 Barometric Pressure (P_{bar}) 29.5 in. Hg
Static Pressure: -0.1 Stack Temperature: 360 (From Method ____ Test Data)

Gas Sample Analysis
____ %CO_2 ____ %O_2

Clock Time 24 hour	Meter Volume (V_m) ft^3 or L (Circle One)	Meter Gage Pressure (ΔH) in. H_2O	Meter Inlet Temp. (t_m) °F	Meter Outlet Temp. (t_m) °F	Impinger Outlet Temp °F	Meter Vacuum "Hg
12:05	00.00	0	87			0
12:10	10.103	2.0	87			-2
12:15	20.406	2.0	87			-2
12:20	30.186	2.0	87			-2
12:25	40.153	2.0	90			-2
12:30	50.417	2.0	90			-3
12:35	60.345	2.0	90			-3
12:40	70.159	2.0	90			-3
12:45	80.240	2.0	90			-2
12:50	90.315	2.0	91			-2
12:55	100.189	2.0	91			-3
13:00	110.358	2.0	91			-3
13:05	120.406	2.0	91			-3
Total Vol. in ft^3 (V_m)=	4.252	Multiply total volume collected in Liters by 0.035315 to convert to ft^3				

Condensate
____ mls (V_f)
- ____ mls (V_i)
= ____ mls gained

Silica Gel or Train
____ grams (W_f)
- ____ grams (W_i)
= ____ grams gained

Average Meter Temperature: 90
(average of both inlet and outlet if applicable)

Comments:

Pre-Test Leak Check: ok @ 10 "Hg
Post-Test Leak Check: ok @ 10 "Hg

Test (Run) No. 2 Barometric Pressure (P_{bar}) 29.5 in. Hg
Static Pressure: -0.1 Stack Temperature: 360 (From Method ____ Test Data)

Gas Sample Analysis
____ %CO_2 ____ %O_2

Clock Time 24 hour	Meter Volume (V_m) ft^3 or L (Circle One)	Meter Gage Pressure (ΔH) in. H_2O	Meter Inlet Temp. (t_m) °F	Meter Outlet Temp. (t_m) °F	Impinger Outlet Temp °F	Meter Vacuum "Hg
13:35	00.00	0	91			0
13:40	10.267	2.0	91			-2
13:45	20.335	2.0	91			-2
13:50	30.185	2.0	91			-2
13:55	40.143	2.0	92			-3
14:00	50.210	2.0	92			-3
14:05	60.257	2.0	92			-3
[illegible]	70.184	2.0	92			-3
14:15	80.248	2.0	92			-3
14:20	90.153	2.0	92			-3
14:25	100.018	2.0	92			-3
14:30	110.045	2.0	92			-3
14:35	120.413	2.0	92			
Total Vol. in ft^3 (V_m)=	4.252	Multiply total volume collected in Liters by 0.035315 to convert to ft^3				

Condensate
____ mls (V_f)
- ____ mls (V_i)
= ____ mls gained

Silica Gel or Train
____ grams (W_f)
- ____ grams (W_i)
= ____ grams gained

Average Meter Temperature: 91.69
(average of both inlet and outlet if applicable)

Comments:

Pre-Test Leak Check: ok @ 10 "Hg
Post-Test Leak Check: ok @ 10 "Hg

© Mostardi Platt

MULTI METHOD NON-ISOKINETIC FIELD DATA SHEET

Project Name/Number: M133003 Date: 7/23/13
Test Location: Univ. of Texas Source Condition:
Test Method: M26 Meter ID: M13A Pre-Calibration Date: 6/14/13
Meter ΔH: Meter Y: 1.004 Test Engineer: AD

Test (Run) No. 3 Barometric Pressure (P_{bar}) 29.3 in. Hg
Static Pressure: -0.1 Stack Temperature: 365 (From Method ____ Test Data)

Gas Sample Analysis: ____ %CO_2 ____ %O_2

Clock Time 24 hour	Meter Volume (V_m) ft³ or L (Circle One)	Meter Gage Pressure (ΔH) in. H_2O	Meter Inlet Temp. (t_m) °F	Meter Outlet Temp. (t_m) °F	Impinger Outlet Temp °F	Meter Vacuum "Hg
14:55	0.000	0	92			0
15:00	10.163	2.0	92			-2.5
15:05	20.135	2.0	92			-2.5
15:10	30.075	2.0	92			-2.5
15:15	40.256	2.0	92			-2.5
15:20	50.145	2.0	92			-3
15:25	60.045	2.0	92			-3
15:30	70.383	2.0	92			-3
15:35	80.417	2.0	92			-3
15:40	90.054	2.0	92			-3
15:45	100.270	2.0	92			-3
15:50	110.567	2.0	92			-3
15:55	120.248		92			
Total Vol. in ft³ (V_m)=	4.247	Multiply total volume collected in Liters by 0.035315 to convert to ft³				

Condensate: ____ mls (V_f) - ____ mls (V_i) = ____ mls gained

Silica Gel or Train: ____ grams (W_f) - ____ grams (W_i) = ____ grams gained

Average Meter Temperature: 92
(average of both inlet and outlet if applicable)

Comments:

Pre-Test Leak Check: OK @ 10 "Hg

Post-Test Leak Check: OK @ 10 "Hg

Test (Run) No. ____ Barometric Pressure (P_{bar}) ____ in. Hg
Static Pressure: ____ Stack Temperature: ____ (From Method ____ Test Data)

Gas Sample Analysis: ____ %CO_2 ____ %O_2

Clock Time 24 hour	Meter Volume (V_m) ft³ or L (Circle One)	Meter Gage Pressure (ΔH) in. H_2O	Meter Inlet Temp. (t_m) °F	Meter Outlet Temp. (t_m) °F	Impinger Outlet Temp °F	Meter Vacuum "Hg
Total Vol. in ft³ (V_m)=		Multiply total volume collected in Liters by 0.035315 to convert to ft³				

Condensate: ____ mls (V_f) - ____ mls (V_i) = ____ mls gained

Silica Gel or Train: ____ grams (W_f) - ____ grams (W_i) = ____ grams gained

Average Meter Temperature: ____
(average of both inlet and outlet if applicable)

Comments:

Pre-Test Leak Check: ____ @ ____ "Hg

Post-Test Leak Check: ____ @ ____ "Hg

© Mostardi Platt

MERCURY SORBENT TRAP FIELD DATA SHEET

Project Name/Number: UNIVERSITY OF IOWA M133003
Sampling Location: HURST BOILER OUTLET DUCT Run Number: 1
Date: 7/24/13 Barometric Pressure: 29.25
Source Condition: Test Engineer: DT
Dry Gas Meter No. M13A Y = 1.009 Trap Number 168444

Sample Train A

Clock Time 24 hour	Stack Temp. °F	Sorbent Trap Temp. °F	Meter Temp. (t_m) °F	Meter Volume (V_m) liters	Meter Vacuum, "Hg
1018	343	250	83	0.0	14
1023	350	251	84	10.430	14
1028	358	252	84	20.252	15
1033	359	251	84	29.912	15
1038	359	250	85	39.847	18
1043	361	251	85	49.685	18
1048	362	250	86	58.887	18
1053	362	251	86	68.026	18
1058	363	252	86	76.981	18
1103	364	250	86	85.646	19
1108	364	251	86	94.000	19
1113	366	250	87	101.889	19
1118	366	251	87	109.424	19
Total/Average			85.3	109.424	

Dry Gas Meter No. M13A Y = 1.004 Trap Number 124022 Spike Value 25 ng

Sample Train B

Clock Time 24 hour	Stack Temp. °F	Sorbent Trap Temp. °F	Meter Temp. (t_m) °F	Meter Volume (V_m) liters	Meter Vacuum, "Hg
1018	343	250	85	0.0	13
1023	350	251	85	10.172	13
1028	358	252	86	19.813	15
1033	359	251	87	29.958	15
1038	359	250	87	39.653	17
1043	361	251	88	48.947	17
1048	362	250	88	57.260	17
1053	362	251	88	65.314	17
1058	363	252	89	72.965	17
1103	364	250	89	80.233	18
1108	364	251	89	86.763	18
1113	366	250	90	92.919	19
1118	366	251	90	98.850	20
Total/Average			87.8	98.850	

Train A: Pre-Test Leak Check – Pass @ 10 "Hg
Post-Test Leak Check – Pass @ 22 "Hg
Train B: Pre-Test Leak Check – Pass @ 10 "Hg
Post-Test Leak Check – Pass @ 22 "Hg

© Mostardi Platt

OHIO LUMEX

Sorbent Trap Chain of Custody

7/24/13

Plant/Source: UNIVERSITY OF IOWA Test Location: BOILER OUTLET DUCT TEST3

Boiler ID: HURST Trap ID: OL 168415

Trap A B (Circle One)

☐ Unspiked ☐ Spiked At: _____
Certified Accuracy ± 10%, Traceable to NIST

QA/QC Signature (Trap Maker) _____

Spike Date: _____ Spike Time: _____ QA/QC Signature (Spiker) _____

Estimated Hg in Section 1: _____ ng

☐ High Flow ☐ COIL ☐ 240 mm
☐ Static Prefilter ☐ AGS ☐ 300 mm
☐ 185 mm ☐ 450 mm

Sampled By: _____ Type of Trap: 30B

Test Start (Date/Time :) _____ Leak Check Pass/Fail _____ Test End (Date/Time) _____ Leak Check Pass/Fail _____

Date	Time	Duct Temp (°F or °C)	**Sorbent Trap Temp (°F or °C)**	Flow Rate (cc/min)	Dry Gas Meter Liters Initial	Dry Gas Meter Liters Final	Total Volume Pulled
Total/Average							

Chain of Custody

Relinquished by Tech.: _____ Date: _____

Received by: _____ Date: _____

Relinquished by: _____ Date: _____

Received for Laboratory by: _____ Date: _____

Make sure all of your sampling conditions prevent moisture condensation in the trap media. Moisture condensation is a major cause of breakthrough and spike loss in sorbent traps and should be prevented at all costs.

Best Before: April 2015

For Analysis contact us:
Ohio Lumex Co., Inc. 9263 Ravenna Road Unit A-3, Twinsburg, OH 44087 USA
Phone 330-405-0837 Fax 330-405-0847 US Toll Free: 888-876-2611

Impregnated Activated Carbon – Refer to MSDS
Deactivated glass and glass wool

© Mostardi Platt

OHIO LUMEX

Sorbent Trap Chain of Custody

7/24/13

Plant/Source: UNIVERSITY OF IOWA Test Location: BOILER OUTLET DUCT

Boiler ID: HURST Trap ID: OL 122453

Trap A (B) (Circle One)

☐ Unspiked ☒ Spiked At: 25 ng
Certified Accuracy ± 10%, Traceable to NIST

QA/QC Signature (Trap Maker) [signature]

Spike Date: 4/25/12 Spike Time: 1015

QA/QC Signature (Spiker) [signature]

Estimated Hg in Section 1: ng

☐ High Flow ☐ COIL ☐ 240 mm
☐ Static Prefilter ☐ AGS ☐ 300 mm
☒ 185 mm ☐ 450 mm

Sampled By: Type of Trap: 30B

Test Start (Date/Time :) Leak Check Pass/Fail Test End (Date/Time) Leak Check Pass/Fail

Date	Time	Duct Temp (°F or °C)	**Sorbent Trap Temp (°F or °C)**	Flow Rate (cc/min)	Dry Gas Meter Liters Initial	Dry Gas Meter Liters Final	Total Volume Pulled
Total/Average							

Chain of Custody

Relinquished by Tech.: Date:

Received by: Date:

Relinquished by: Date:

Received for Laboratory by: Date:

Make sure all of your sampling conditions prevent moisture condensation in the trap media. Moisture condensation is a major cause of breakthrough and spike loss in sorbent traps and should be prevented at all costs.

Best Before: April 2014

For Analysis contact us:

Ohio Lumex Co., Inc. 9263 Ravenna Road Unit A-3, Twinsburg, OH 44087 USA

Phone 330-405-0837 Fax 330-405-0847 US Toll Free: 888-876-2611

Impregnated Activated Carbon – Refer to MSDS
Deactivated glass and glass wool

© Mostardi Platt

MERCURY SORBENT TRAP FIELD DATA SHEET

Project Name/Number: UNIVERSITY OF IOWA M133003
Sampling Location: HURST BOILER OUTLET DUCT Run Number: 2
Date: 7/24/13 Barometric Pressure: 29.25
Source Condition: Test Engineer:
Dry Gas Meter No. M13A Y = 1.009 Trap Number 168405

Sample Train A

Clock Time 24 hour	Stack Temp. °F	Sorbent Trap Temp. °F	Meter Temp. (t_m) °F	Meter Volume (V_m) liters	Meter Vacuum, "Hg
1230	350	251	89	0.0	13
1235	355	250	89	7.830	15
1240	358	252	90	18.475	16
1245	363	251	90	28.912	17
1250	363	250	90	38.716	17
1255	364	251	90	48.354	17
1300	365	250	90	56.803	17
1305	365	251	91	65.025	17
1310	366	252	91	72.436	17
1315	366	251	91	79.304	17
1320	364	252	91	85.552	17
1325	367	251	91	91.537	18
1330	372	250	91	100.212	20
Total/Average			90.3		

Dry Gas Meter No. M13A Y = 1.004 Trap Number 123480 Spike Value 25 ng

Sample Train B

Clock Time 24 hour	Stack Temp. °F	Sorbent Trap Temp. °F	Meter Temp. (t_m) °F	Meter Volume (V_m) liters	Meter Vacuum, "Hg
1230	350	251	92	0.0	13
1235	355	250	92	8.320	14
1240	358	252	93	18.352	14
1245	363	251	93	28.568	15
1250	363	250	93	38.130	16
1255	364	251	93	47.427	17
1300	365	250	94	55.849	18
1305	365	251	94	64.095	18
1310	366	252	94	71.180	18
1315	366	251	94	78.767	18
1320	364	252	94	84.379	18
1325	367	251	94	90.485	19
1330	372	250	95	100.140	22
Total/Average			93.5		

Train A: Pre-Test Leak Check – Pass @ 15 "Hg
Post-Test Leak Check – Pass @ _____ "Hg
Train B: Pre-Test Leak Check – Pass @ 15 "Hg
Post-Test Leak Check – Pass @ _____ "Hg

© Montrose Air Quality Services, LLC

OHIO LUMEX

Sorbent Trap Chain of Custody

7/24/13

Plant/Source: UNIVERSITY OF IOWA Test Location: BOILER OUTLET DUCT TEST

Boiler ID: HURST Trap ID: OL 168405

Trap (A) B (Circle One)

☒ Unspiked ☐ Spiked At: _____
Certified Accuracy ± 10%, Traceable to NIST

QA/QC Signature (Trap Maker) _____

Spike Date: _____ Spike Time: _____ QA/QC Signature (Spiker) _____

Estimated Hg in Section 1: _____ ng

☐ High Flow ☐ COIL ☐ 240 mm
☐ Static Prefilter ☐ AGS ☐ 300 mm
☒ 185 mm ☐ 450 mm

Sampled By: _____ Type of Trap: 30B

Test Start (Date/Time :) _____ Leak Check Pass/Fail _____ Test End (Date/Time) _____ Leak Check Pass/Fail _____

Date	Time	Duct Temp (°F or °C)	**Sorbent Trap Temp (°F or °C)**	Flow Rate (cc/min)	Dry Gas Meter Liters Initial	Dry Gas Meter Liters Final	Total Volume Pulled
Total/Average							

Chain of Custody

Relinquished by Tech.: _____ Date: _____

Received by: _____ Date: _____

Relinquished by: _____ Date: _____

Received for Laboratory by: _____ Date: _____

Make sure all of your sampling conditions prevent moisture condensation in the trap media. Moisture condensation is a major cause of breakthrough and spike loss in sorbent traps and should be prevented at all costs.

Best Before: April 2013

For Analysis contact us:
Ohio Lumex Co., Inc. 9263 Ravenna Road Unit A-3, Twinsburg, OH 44087 USA
Phone 330-405-0837 Fax 330-405-0847 US Toll Free: 888-876-2611

Impregnated Activated Carbon – Refer to MSDS
Deactivated glass and glass wool

© Mostardi Platt

OHIO LUMEX

Sorbent Trap Chain of Custody

7/24/13

Plant/Source: UNIVERSITY OF IOWA

Test Location: BOILER OUTLET DUCT TEST 2

Boiler ID: HURST

Trap ID: OL 123480

Trap A (B) (Circle One)

☐ Unspiked ☒ Spiked At: 25 ng

Certified Accuracy ± 10%, Traceable to NIST

QA/QC Signature (Trap Maker)

Spike Date: 4/25/12 Spike Time: 1015

QA/QC Signature (Spiker)

Estimated Hg in Section 1: _____ ng

☐ High Flow ☐ COIL ☐ 240 mm

☐ Static Prefilter ☐ AGS ☐ 300 mm

☒ 185 mm ☐ 450 mm

Sampled By: _____

Type of Trap: 30B

Test Start (Date/Time :) _____ Leak Check Pass/Fail _____ Test End (Date/Time) _____ Leak Check Pass/Fail _____

Date	Time	Duct Temp (°F or °C)	**Sorbent Trap Temp (°F or °C)**	Flow Rate (cc/min)	Dry Gas Meter Liters Initial	Dry Gas Meter Liters Final	Total Volume Pulled
Total/Average							

Chain of Custody

Relinquished by Tech.: _____ Date: _____

Received by: _____ Date: _____

Relinquished by: _____ Date: _____

Received for Laboratory by: _____ Date: _____

Make sure all of your sampling conditions prevent moisture condensation in the trap media. Moisture condensation is a major cause of breakthrough and spike loss in sorbent traps and should be prevented at all costs.

Best Before: April 2014

For Analysis contact us:

Ohio Lumex Co., Inc. 9263 Ravenna Road Unit A-3, Twinsburg, OH 44087 USA

Phone 330-405-0837 Fax 330-405-0847 US Toll Free: 888-876-2611

Impregnated Activated Carbon – Refer to MSDS

Deactivated glass and glass wool

© Mostardi Platt

MERCURY SORBENT TRAP FIELD DATA SHEET

Project Name/Number: UNIVERSITY OF IOWA
Sampling Location: HURST BOILER OUTLET DUCT Run Number: 3
Date: 7/24/13 Barometric Pressure: 29.25
Source Condition: Test Engineer: DT
Dry Gas Meter No. M13A Y = 1.009 Trap Number 168415

Sample Train A

Clock Time 24 hour	Stack Temp. °F	Sorbent Trap Temp. °F	Meter Temp. (t_m) °F	Meter Volume (V_m) liters	Meter Vacuum, "Hg
1445	319	251	92	0.0	12
1450	337	250	92	9.754	16
1455	346	252	92	19.820	17
1500	349	251	92	30.256	18
1505	353	250	93	38.628	18
1510	356	251	93	46.740	18
1515	357	252	93	55.032	18
1520	360	251	93	63.495	18
1525	363	250	93	71.673	20
1530	364	250	93	80.210	20
1535	364	251	93	87.854	20
1540	372	250	93	94.643	20
1545	379	251	93	100.230	20
Total/Average			92.7		

Dry Gas Meter No. M13B Y = 1.004 Trap Number 122453 Spike Value 25 ng

Sample Train B

Clock Time 24 hour	Stack Temp. °F	Sorbent Trap Temp. °F	Meter Temp. (t_m) °F	Meter Volume (V_m) liters	Meter Vacuum, "Hg
1445	319	251	94	0.0	12
1450	337	250	95	9.562	14
1455	346	252	95	19.456	16
1500	349	251	95	28.152	18
1505	353	250	95	36.490	18
1510	356	251	95	43.463	18
1515	357	252	95	50.855	18
1520	360	251	95	58.256	18
1525	363	250	96	66.827	20
1530	364	250	96	75.500	20
1535	364	251	96	84.621	20
1540	372	250	96	93.056	20
1545	379	251	96	100.159	20
Total/Average			95.3		

Train A: Pre-Test Leak Check – Pass @ 15 "Hg
Post-Test Leak Check – Pass @ 22 "Hg
Train B: Pre-Test Leak Check – Pass @ 15 "Hg
Post-Test Leak Check – Pass @ 22 "Hg

OHIO LUMEX

Sorbent Trap Chain of Custody

7/24/13

Plant/Source: UNIVERSITY OF IOWA Test Location: BOILER OUTLET DUCT TEST

Boiler ID: HURST Trap ID: OL 168444

Trap (A) B (Circle One)

☒ Unspiked ☐ Spiked At: _____
Certified Accuracy ± 10%, Traceable to NIST

QA/QC Signature (Trap Maker) _____

Spike Date: _____ Spike Time: _____

QA/QC Signature (Spiker) _____

Estimated Hg in Section 1: _____ ng

☐ High Flow ☐ COIL ☐ 240 mm
☐ Static Prefilter ☐ AGS ☐ 300 mm
☒ 185 mm ☐ 450 mm

Sampled By: _____ Type of Trap: 30B

Test Start (Date/Time :) _____ Leak Check Pass/Fail _____ Test End (Date/Time) _____ Leak Check Pass/Fail _____

Date	Time	Duct Temp (°F or °C)	**Sorbent Trap Temp (°F or °C)**	Flow Rate (cc/min)	Dry Gas Meter Liters Initial	Dry Gas Meter Liters Final	Total Volume Pulled
Total/Average							

Chain of Custody

Relinquished by Tech.: _____ Date: _____

Received by: _____ Date: _____

Relinquished by: _____ Date: _____

Received for Laboratory by: _____ Date: _____

Make sure all of your sampling conditions prevent moisture condensation in the trap media. Moisture condensation is a major cause of breakthrough and spike loss in sorbent traps and should be prevented at all costs.

Best Before: April 2015

For Analysis contact us:
Ohio Lumex Co., Inc. 9263 Ravenna Road Unit A-3, Twinsburg, OH 44087 USA
Phone 330-405-0837 Fax 330-405-0847 US Toll Free: 888-876-2611

Impregnated Activated Carbon – Refer to MSDS
Deactivated glass and glass wool

OHIO LUMEX

Sorbent Trap Chain of Custody

7/24/13

Plant/Source: UNIVERSITY OF IOWA

Test Location: BOILER OUTLET DUCT TEST

Boiler ID: HURST

Trap ID: OL 124022

Trap A (B) (Circle One)

☐ Unspiked ☒ Spiked At: 25 ng
Certified Accuracy ± 10%, Traceable to NIST

QA/QC Signature (Trap Maker)

Spike Date: 4/25/12 Spike Time: 1015

QA/QC Signature (Spiker)

Estimated Hg in Section 1: _____ ng

☐ High Flow ☐ COIL ☐ 240 mm
☐ Static Prefilter ☐ AGS ☐ 300 mm
☒ 185 mm ☐ 450 mm

Sampled By: _____

Type of Trap: 30B

Test Start (Date/Time :) _____ Leak Check Pass/Fail _____ Test End (Date/Time) _____ Leak Check Pass/Fail _____

Date	Time	Duct Temp (°F or °C)	**Sorbent Trap Temp (°F or °C)**	Flow Rate (cc/min)	Dry Gas Meter Liters Initial	Dry Gas Meter Liters Final	Total Volume Pulled
Total/Average							

Chain of Custody

Relinquished by Tech.: _____ Date: _____

Received by: _____ Date: _____

Relinquished by: _____ Date: _____

Received for Laboratory by: _____ Date: _____

Make sure all of your sampling conditions prevent moisture condensation in the trap media. Moisture condensation is a major cause of breakthrough and spike loss in sorbent traps and should be prevented at all costs.

Best Before: April 2014

For Analysis contact us:
Ohio Lumex Co., Inc. 9263 Ravenna Road Unit A-3, Twinsburg, OH 44087 USA
Phone 330-405-0837 Fax 330-405-0847 US Toll Free: 888-876-2611

Impregnated Activated Carbon – Refer to MSDS
Deactivated glass and glass wool

© Mostardi Platt

Appendix H - Calibration Data

© Mostardi Platt

MOSTARDI PLATT

Procedures for Calibration

Dry Gas Meters

The test meters are calibrated according to Method 5, Section 5.3 and "Procedures for Calibrating and Using Dry Gas Volume Meters as Calibration Standards" by P.R. Westlin and R.T. Shigehara, March 10, 1978.

Analytical Balance

The accuracy of the analytical balance is checked with Class S, Stainless Steel Type 303 weights manufactured by F. Hopken and Son, Jersey City, New Jersey.

Temperature Sensing Devices

The potentiometer and thermocouples are calibrated utilizing a NBS traceable millivolt source.

Nozzles

The nozzles are measured according to Method 5, Section 5.1.

Pitot Tubes

The pitot tubes used during this test program are fabricated according to the specification described and illustrated in the Code of Federal Regulations, Title 40, Part 60, Appendix A, Methods 1 through 5 as published in the Federal Register, Volume 42, No. 160; hereafter referred to by the appropriate method number. The pitot tubes comply with the alignment specifications in Method 2, Section 4; and the pitot tube assemblies are in compliance with specifications in the same section.

© Mostardi Platt

Dry Gas Meter/Control Module Calibration Diagram

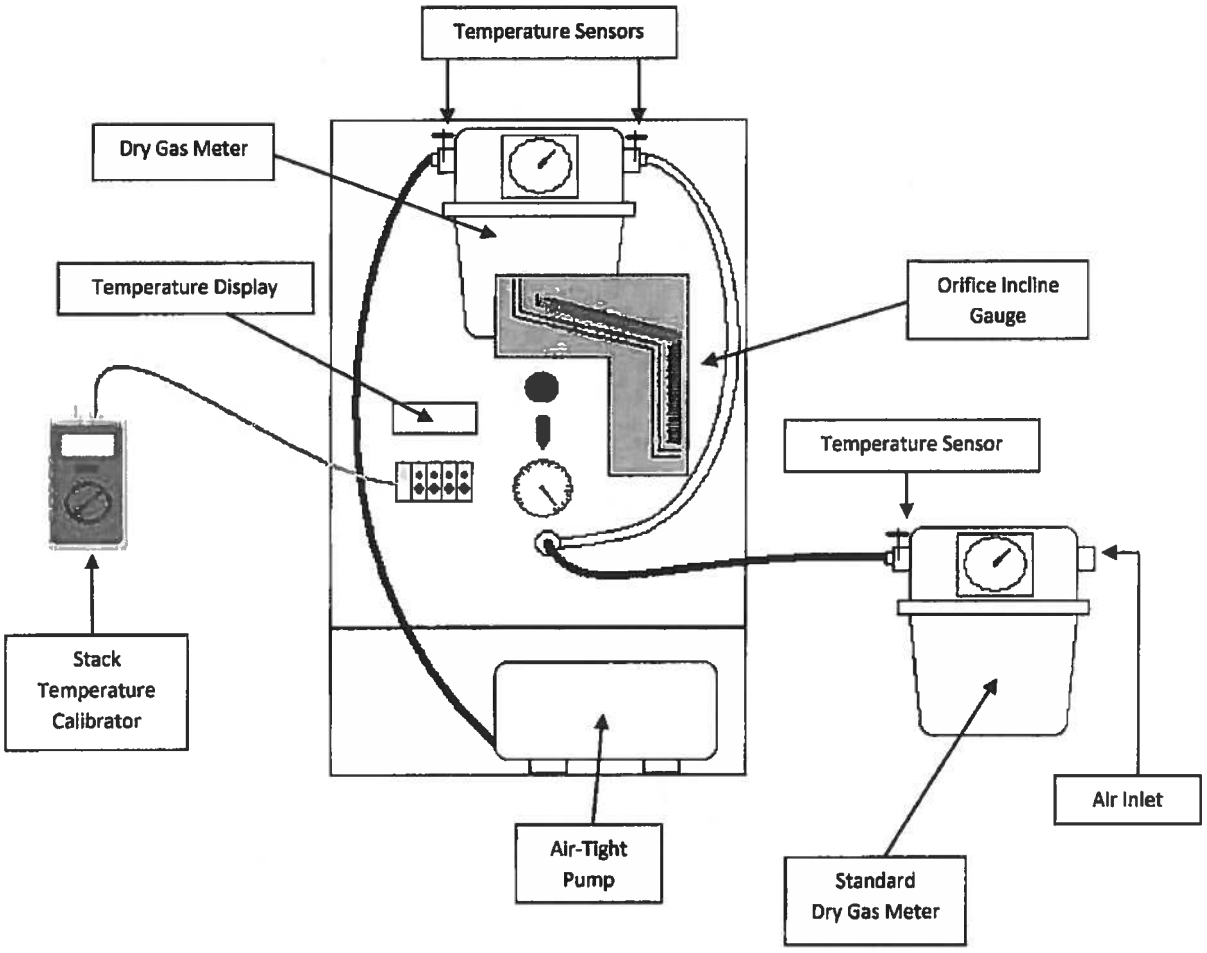

© Mostardi Platt

METER CALIBRATION

Meter Information					
Console Model	XC-260	Dry Gas Meter Number	M13 A	Encoder Model	HEDS-9100-F00
Gas Meter Model	SK25	Totalizer Scale Factor (Initial)	1.0000	Totalizer Model	RED LION
		Totalizer Scale Factor (Final)	1.0090	Temp Display Model	JENCO

Calibration Conditions							
WTM ID	15788714	Calibration Technician	LDP			Calibration Date	19-Jun-13
WTM Cal Factor	1.0005	Barometric Pressure	(Pb)	748.4522	mm Hg		

	Calibration Data										Results				
	Run Time		Dry Gas Meter		Wet Test Meter		Standardized Volumes				Totalizer Gamma	Totalizer Gamma	Meter Gamma		Corrected Flowrate
	Elapsed		Gas Temp	Totalizer Display	Gas Volume	Gas Temp	Totalizer Initial SF	Totalizer Final SF	Dry Gas Meter	Wet Test Meter	Initial	Variation	DGM Display	Variation	
	(Θ)		(t_m)		(V_w)	(t_w)	($V_{m(std)}$)	($V_{m(std)}$)	($V_{m(std)}$)	($V_{w(std)}$)	(Y)	(ΔY)	(Y)	(ΔY)	(Q_m)
	min		°C	liters	liters	°C	std liters	std liters	std liters	std liters					slm
Run 1 - Initial	0.00		22.222	0	819.77	20									
Final	30.00		22.777	127.291	947.71	20									
Total/Avg	30.00		22.5	127.291	127.94	20	124.385	125.500		126.149	1.014	0.005			4.21
Run 2 - Initial	0.00		22.777	0	947.71	20									
Final	30.00		23.333	82.051	1029.49	20.555									
Total/Avg	30.00		23.055	82.051	81.78	20.2775	80.027	80.745		80.559	1.007	-0.002			2.69
Run 3 - Initial	0.00		23.333	0	1029.49	20									
Final	30.00		23.333	50.52	1079.72	20									
Total/Avg	30.00		23.333	50.52	50.23	20	49.228	49.669		49.527	1.006	-0.003			1.65

1.009

Average Meter Calibration Factor Y	1.009

Note: For Calibration Factor Y, the ratio of the reading of the calibration meter to the dry gas meter, acceptable tolerance of individual values from the average is +-0.02.

© Mostardi Platt

METER CALIBRATION

Meter Information					
Console Model	XC-260	Dry Gas Meter Number	M13 B	Encoder Model	HEDS-9100-F00
Gas Meter Model	SK25	Totalizer Scale Factor (Initial)	1.0000	Totalizer Model	RED LION
		Totalizer Scale Factor (Final)	1.0038	Temp Display Model	JENCO

Calibration Conditions							
WTM ID	15788714	Calibration Technician	LDP			Calibration Date	19-Jun-13
WTM Cal Factor	1.0005	Barometric Pressure	(Pb)	749.468085	mm Hg		

	Calibration Data											Results				
	Run Time		Dry Gas Meter		Wet Test Meter		Standardized Volumes				Totalizer Gamma	Totalizer Gamma	Meter Gamma		Corrected Flowrate
	Elapsed		Gas Temp	Totalizer Display	Gas Volume	Gas Temp	Totalizer Initial SF	Totalizer Final SF	Dry Gas Meter	Wet Test Meter	Initial	Variation	DGM Display	Variation	
	(Θ)		(t_m)		(V_w)	(t_w)	($V_{m(std)}$)	($V_{m(std)}$)	($V_{m(std)}$)	($V_{w(std)}$)	(Y)	(ΔY)	(Y)	(ΔY)	(Q_m)
	min		°C	liters	liters	°C	std liters	std liters	std liters	std liters					slm
Run 1 - Initial	0.00		24.444	0	1184.83	20									
Final	30.00		25	129.829	1314.04	20.555									
Total/Avg	30.00		24.722	129.829	129.21	20.2775	126.089	126.568		127.453	1.011	0.007			4.25
Run 2 - Initial	0.00		25	0	1314.04	20.555									
Final	30.00		25	87.237	1400.04	20.555									
Total/Avg	30.00		25	87.237	86	20.555	84.645	84.967		84.750	1.001	-0.003			2.83
Run 3 - Initial	0.00		25	0	1400.04	20.555									
Final	30.00		25	54.048	1453.22	20.555									
Total/Avg	30.00		25	54.048	53.18	20.555	52.442	52.641		52.407	0.999	-0.004			1.75

1.004

Average Meter Calibration Factor Y **1.004**

Note: For Calibration Factor Y, the ratio of the reading of the calibration meter to the dry gas meter, acceptable tolerance of individual values from the average is +-0.02.

© Mostardi Platt

Stack Temperature Sensor Calibration

Meter Box # : *M13* *Name :* *LDP*

Ambient Temperature : *70* *°F* *Date :* *June 19, 2013*

Calibrator Model # : *CL23A*

Serial # : *T-249465*

Date Of Certification : *August 7, 2012*

Primary Standards Directly Traceable National Institute of Standards and Technology (NIST)

Reference Source Temperature (° F)	Test Thermometer Temperature (° F)	Temperature Difference %
0	0	0.0
250	249	0.1
600	599	0.1
1200	1200	0.0

$$\frac{(\text{Ref. Temp., °F} + 460) - (\text{Test Therm. Temp., °F} + 460)}{\text{Ref. Temp., °F} + 460} * 100 <= 1.5\ \%$$

© Mostardi Platt

METER CALIBRATION

Meter Information					
Console Model	XC-260	Dry Gas Meter Number	M13 A	Encoder Model	HEDS-9100-F00
Gas Meter Model	SK25	Totalizer Scale Factor (Initial)	1.0000	Totalizer Model	RED LION
		Totalizer Scale Factor (Final)	1.0046	Temp Display Model	JENCO

Calibration Conditions							
WTM ID	15340981	Calibration Technician	RGO			Calibration Date	31-Jul-13
WTM Cal Factor	1.0029	Barometric Pressure	(Pb)	747.69029	mm Hg		

	Calibration Data											Results				
	Run Time		Dry Gas Meter		Wet Test Meter		Standardized Volumes				Totalizer Gamma	Totalizer Gamma	Meter Gamma		Corrected Flowrate
	Elapsed		Gas Temp	Totalizer Display	Gas Volume	Gas Temp	Totalizer Initial SF	Totalizer Final SF	Dry Gas Meter	Wet Test Meter	Initial	Variation	DGM Display	Variation	
	(Θ)		(t_m)		(V_w)	(t_w)	($V_{m(std)}$)	($V_{m(std)}$)	($V_{m(std)}$)	($V_{w(std)}$)	(Y)	(ΔY)	(Y)	(ΔY)	(Q_m)
	min		°C	liters	liters	°C	std liters	std liters	std liters	std liters					slm
Run 1 - Initial	0.00		21.111	0	3553.18	21.111									
Final	30.00		22.222	124.512	3678.54	21.667									
Total/Avg	30.00		21.667	124.512	125.36	21.389	121.889	122.445		123.191	1.011	0.006			4.12
Run 2 - Initial	0.00		22.222	0	3679.89	21.667									
Final	31.00		22.222	84.025	3763.97	21.667									
Total/Avg	31.00		22.222	84.025	84.08	21.667	82.100	82.474		82.547	1.005	0.001			2.67
Run 3 - Initial	0.00		22.222	0	3764.43	21.667									
Final	31.00		22.222	51.501	3815.56	21.667									
Total/Avg	31.00		22.222	51.501	51.13	21.667	50.321	50.551		50.198	0.998	-0.007			1.62

1.005

Average Meter Calibration Factor Y **1.005**

Note: For Calibration Factor Y, the ratio of the reading of the calibration meter to the dry gas meter, acceptable tolerance of individual values from the average is +-0.02.

© Mostardi Platt

METER CALIBRATION

Meter Information					
Console Model	XC-260	Dry Gas Meter Number	M13 B	Encoder Model	HEDS-9100-F00
Gas Meter Model	SK25	Totalizer Scale Factor (Initial)	1.0000	Totalizer Model	RED LION
		Totalizer Scale Factor (Final)	1.0052	Temp Display Model	JENCO

Calibration Conditions						
WTM ID	15340981	Calibration Technician	RGO		Calibration Date	31-Jul-13
WTM Cal Factor	1.0029	Barometric Pressure	(Pb)	747.690288	mm Hg	

	Calibration Data										Results				
	Run Time		Dry Gas Meter		Wet Test Meter		Standardized Volumes				Totalizer Gamma	Totalizer Gamma	Meter Gamma		Corrected Flowrate
	Elapsed		Gas Temp	Totalizer Display	Gas Volume	Gas Temp	Totalizer Initial SF	Totalizer Final SF	Dry Gas Meter	Wet Test Meter	Initial	Variation	DGM Display	Variation	
	(Θ)		(t_m)		(V_w)	(t_w)	($V_{m(std)}$)	($V_{m(std)}$)	($V_{m(std)}$)	($V_{w(std)}$)	(Y)	(ΔY)	(Y)	(ΔY)	(Q_m)
	min		°C	liters	liters	°C	std liters	std liters	std liters	std liters					slm
Run 1 - Initial	0.00		23.333	0	3844.56	22.222									
Final	30.00		23.333	132.311	3977.91	22.222									
Total/Avg	30.00		23.333	132.311	133.35	22.222	128.795	129.468		130.673	1.015	0.009			4.37
Run 2 - Initial	0.00		23.333	0	3978.95	22.222									
Final	32.00		23.333	88.788	4066.02	22.222									
Total/Avg	32.00		23.333	88.788	87.07	22.222	86.429	86.880		85.322	0.987	-0.018			2.67
Run 3 - Initial	0.00		23.333	0	4066.21	22.222									
Final	30.00		23.889	49.343	4115.86	22.222									
Total/Avg	30.00		23.611	49.343	49.65	22.222	47.987	48.237		48.653	1.014	0.009			1.63

1.005

Average Meter Calibration Factor Y **1.005**

Note: For Calibration Factor Y, the ratio of the reading of the calibration meter to the dry gas meter, acceptable tolerance of individual values from the average is +-0.02.

© Mostardi Platt

Stack Temperature Sensor Calibration

Meter Box # : M13 *Name :* RGO

Ambient Temperature : 75 °F *Date :* July 31, 2013

Calibrator Model # : CL23A

Serial # : T-249465

Date Of Certification : August 7, 2012

Primary Standards Directly Traceable National Institute of Standards and Technology (NIST)

Reference Source Temperature (° F)	Test Thermometer Temperature (° F)	Temperature Difference %
0	-1	0.2
250	248	0.3
600	597	0.3
1200	1199	0.1

$$\frac{(\text{Ref. Temp., °F} + 460) - (\text{Test Therm. Temp., °F} + 460)}{\text{Ref. Temp., °F} + 460} * 100 <= 1.5\ \%$$

© Mostardi Platt

Meter Box Calibration

Dry Gas Meter Calibration Data

Dry Gas Meter No.	*CM6*	*Date:*	*June 24, 2013*
Standard Meter No.	*16541852*	*Calibrated By:*	*LDP*
Standard Meter (Y)	*1.0005*	*Barometric Pressure:*	*29.35*

Run Number		Orifice Setting in H_2O Chg (H)	Standard Meter Gas Volume vr	Dry Gas Meter Gas Volume vd	Standard Meter Temp. F° tr	Dry Gas Meter Inlet Temp. F° tdi	Dry Gas Meter Outlet Temp. F° tdo	Dry Gas Meter Avg. Temp. F° td	Time Min	Time Sec	Y	Chg (H)
Final			50.086	105.603	72	78	76					
Initial			43.246	98.705	72	80	76					
Difference	1	0.20	6.840	6.898	72	79	76	78	24	30	1.001	1.458
Final			57.070	12.610	73	79	76					
Initial			50.086	5.603	72	77	76					
Difference	2	0.50	6.984	7.007	73	78	76	77	16	0	1.004	1.496
Final			63.250	18.796	73	80	77					
Initial			57.070	12.610	73	78	76					
Difference	3	0.70	6.180	6.186	73	79	77	78	12	0	1.006	1.505
Final			69.162	24.711	73	81	77					
Initial			63.250	18.796	73	80	77					
Difference	4	0.90	5.912	5.915	73	81	77	79	10	0	1.008	1.466
Final			75.122	30.665	73	82	77					
Initial			69.162	24.711	73	80	77					
Difference	5	1.20	5.960	5.954	73	81	77	79	9	0	1.009	1.557
Final			43.246	98.705	72	82	76					
Initial			36.560	92.020	72	82	75					
Difference	6	2.00	6.686	6.685	72	82	76	79	8	0	1.008	1.624
									Average		**1.006**	**1.518**

© Mostardi Platt

Stack Temperature Sensor Calibration

Meter Box # : CM6 *Name :* LDP

Ambient Temperature : 75 °F *Date :* June 24, 2013

Calibrator Model # : CL23A

Serial # : T-249465

Date Of Certification : August 7, 2012

Primary Standards Directly Traceable National Institute of Standards and Technology (NIST)

Reference Source Temperature (° F)	Test Thermometer Temperature (° F)	Temperature Difference %
0	0	0.0
250	251	0.1
600	602	0.2
1200	1207	0.4

$$\frac{(\text{Ref. Temp., °F} + 460) - (\text{Test Therm. Temp., °F} + 460)}{\text{Ref. Temp., °F} + 460} * 100 <= 1.5\ \%$$

© Mostardi Platt

Meter Box Calibration

Dry Gas Meter Calibration Data

Dry Gas Meter No.	CM6	Date:	July 26, 2013
Standard Meter No.	4319699	Calibrated By:	AD
Standard Meter (Y)	0.9928	Barometric Pressure:	29.03

Run Number		Orifice Setting in H_2O Chg (H)	Standard Meter Gas Volume vr	Dry Gas Meter Gas Volume vd	Standard Meter Temp. F° tr	Dry Gas Meter Inlet Temp. F° tdi	Dry Gas Meter Outlet Temp. F° tdo	Dry Gas Meter Avg. Temp. F° td	Time Min	Time Sec	Y	Chg (H)
Final			229.725	711.192	72.000	77.000	76.000					
Initial			224.655	706.175	72	75	72					
Difference	1	0.20	5.070	5.017	72	76	74	75	18	12	1.016	1.488
Final			235.052	716.471	72	77	76					
Initial			229.909	711.374	71	77	76					
Difference	2	0.50	5.143	5.097	72	77	76	77	11	39	1.017	1.474
Final			240.531	721.895	72	77	77					
Initial			235.448	716.875	72	77	76					
Difference	3	0.70	5.083	5.020	72	77	77	77	9	40	1.020	1.457
Final			246.280	727.600	72	79	77					
Initial			240.931	722.283	72	77	77					
Difference	4	0.90	5.349	5.317	72	78	77	78	9	10	1.014	1.519
Final			251.785	733.042	72	81	77					
Initial			246.645	727.955	72	79	77					
Difference	5	1.20	5.140	5.087	72	80	77	79	7	30	1.020	1.465
Final			224.403	705.904	71	79	75					
Initial			219.294	700.864	72	75	72					
Difference	6	2.00	5.109	5.040	72	77	74	75	6	0	1.016	1.589
									Average		1.017	1.499

© Mostardi Platt

Stack Temperature Sensor Calibration

Meter Box # : CM6 *Name :* AD

Ambient Temperature : 75.2 °F *Date :* July 26, 2013

Calibrator Model # : CL23A

Serial # : T-249465

Date Of Certification : November 29, 2012

Primary Standards Directly Traceable National Institute of Standards and Technology (NIST)

Reference Source Temperature (° F)	Test Thermometer Temperature (° F)	Temperature Difference %
0	0	0.0
250	251	0.1
600	602	0.2
1200	1207	0.4

$$\frac{(\text{Ref. Temp., °F} + 460) - (\text{Test Therm. Temp., °F} + 460)}{\text{Ref. Temp., °F} + 460} * 100 <= 1.5\ \%$$

© Mostardi Platt

S TYPE PITOT TUBE INSPECTION WORKSHEET

Pitot Tube No: 170 Date: 7/1/2013 Inspector's Name: AHM

Type of Probe: (circle one) M2 M5 M17 Probe Length: 4 ft.

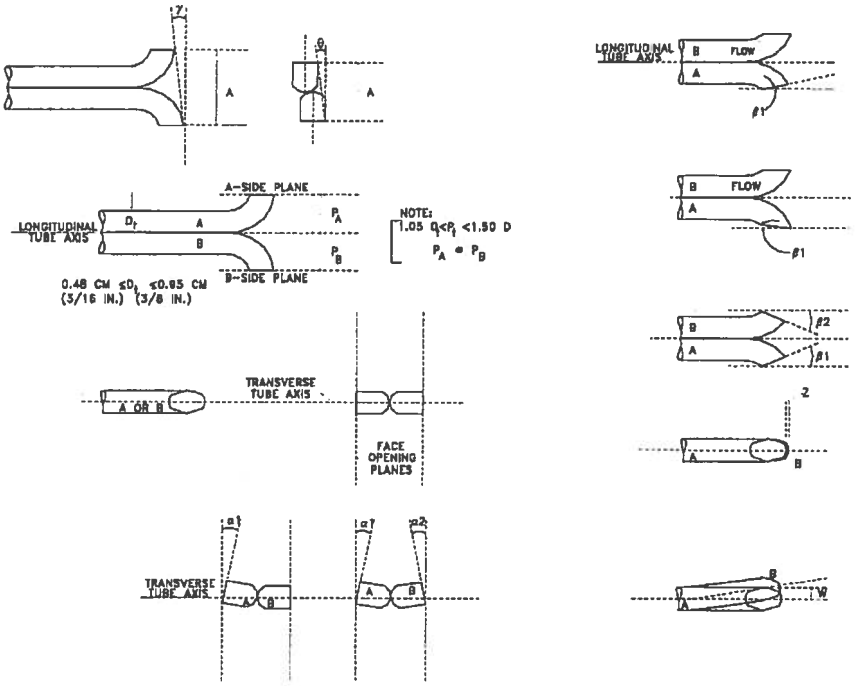

Pitot tube assembly level? x yes ____ no

Pitot tube openings damaged? ____ yes (explain below) x no

a_1 = 0.5 ° (<10°), a_2 = 0.5 ° (<10°) z = A sin g = 0.019 (in.); (<0.125 in.)

b_1 = 1.5 ° (<5°), b_2 = 0.5 ° (<5°) w = A sin q = 0.019 (in.); (<0.03125 in.)

γ = 1 °, θ = 1 °, A = 1.111 (in.) P_A = 0.556 (in.), P_B = 0.556 (in.), D_t = 0.375 (in.)

Calibration required? ____ yes x no

© Mostardi Platt

S TYPE PITOT TUBE INSPECTION WORKSHEET

Pitot Tube No: 170 Date: 8/22/2013 Inspector's Name: LDN

Type of Probe: (circle one) M2 M5 M17 Probe Length: 4 ft.

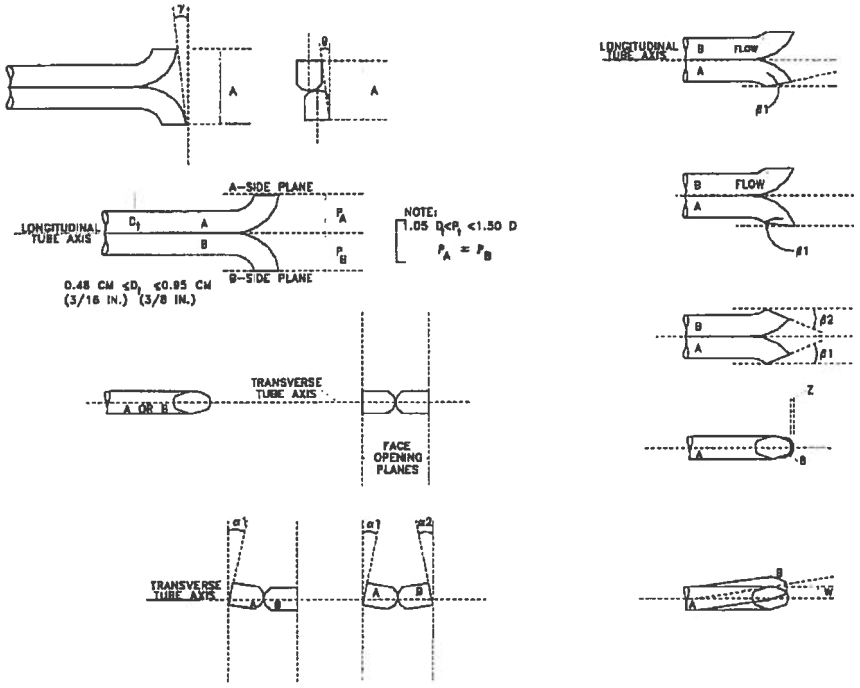

Pitot tube assembly level? x yes ____ no

Pitot tube openings damaged? ____ yes (explain below) x no

a_1 = 1.5 ° (<10°), a_2 = 0 ° (<10°) z = A sin g = 0.000 (in.); (<0.125 in.)

b_1 = 1 ° (<5°), b_2 = 0 ° (<5°) w = A sin q = 0.010 (in.); (<0.03125 in.)

γ = 0 °, θ = 0.5 °, A = 1.122 (in.) P_A = 0.561 (in.), P_B = 0.561 (in.), D_1 = 0.375 (in.)

Calibration required? ____ yes x no

© Mostardi Platt

S TYPE PITOT TUBE INSPECTION WORKSHEET

Pitot Tube No: 203 Date: 7/1/2013 Inspector's Name: AHM

Type of Probe: (circle one) M2 M5 M17 Probe Length: 4 ft.

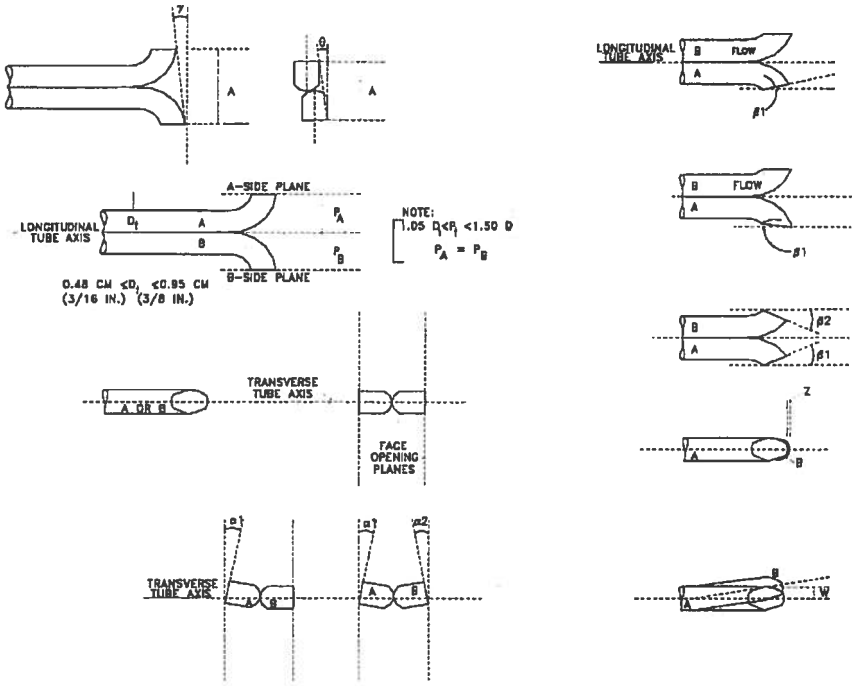

Pitot tube assembly level? x yes ____ no

Pitot tube openings damaged? ____ yes (explain below) x no

a_1 = 1 ° (<10°), a_2 = 0.5 ° (<10°) z = A sin g = 0.046 (in.); (<0.125 in.)

b_1 = 0.5 ° (<5°), b_2 = 1.5 ° (<5°) w = A sin q = 0.009 (in.); (<0.03125 in.)

γ = 2.5 °, θ = 0.5 °, A = 1.052 (in.) P_A = 0.526 (in.), P_B = 0.526 (in.), D_t = 0.375 (in.)

Calibration required? ____ yes x no

© Mostardi Platt

S TYPE PITOT TUBE INSPECTION WORKSHEET

Pitot Tube No: 203 Date: 8/22/2013 Inspector's Name: LDN

Type of Probe: (circle one) M2 M5 M17 Probe Length: 4 ft.

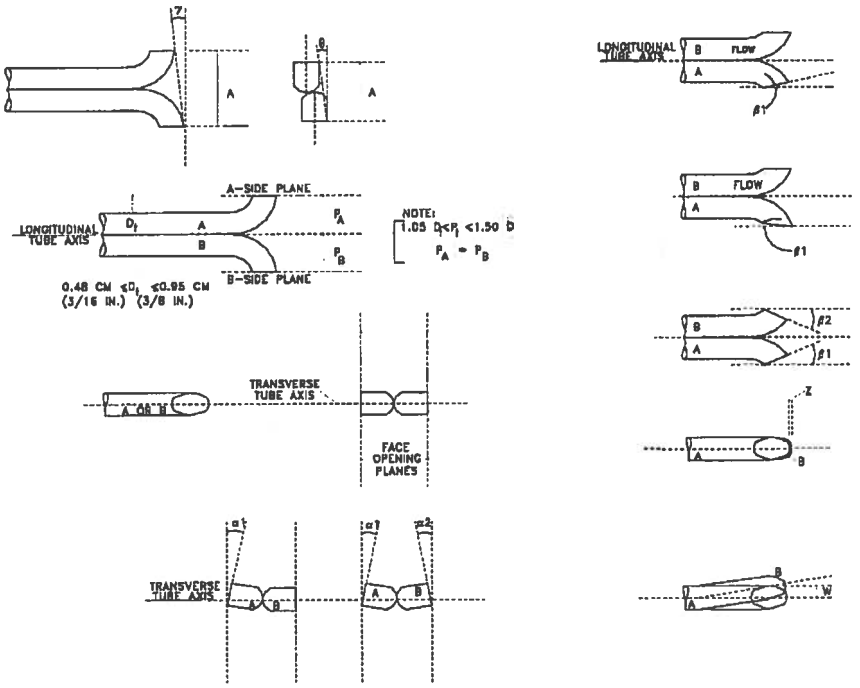

Pitot tube assembly level? x yes ____ no

Pitot tube openings damaged? ____ yes (explain below) x no

a_1 = 2 ° (<10°), a_2 = 0 ° (<10°) z = A sin g = 0.046 (in.); (<0.125 in.)

b_1 = 1 ° (<5°), b_2 = 1.5 ° (<5°) w = A sin q = 0.018 (in.); (<0.03125 in.)

γ = 2.5 °, θ = 1 °, A = 1.056 (in.) P_A = 0.528 (in.), P_B = 0.528 (in.), D_t = 0.375 (in.)

Calibration required? ____ yes x no

© Mostardi Platt

Nozzle Calibration Sheet
Set No. 7

Nominal Diameter	.120	.175	.200	.230	.250	.275	.300	.310	.375	.425	.500
Nozzle Diameter	.118	.174	.212	.239	.245	.272	.317	.332	.358	.432	.495
Nozzle Identification Number	7-4	7-6	7-7	8	7-8	9	7-10	7-11	7-12	4-14	6-16

© Mostardi Platt

WEIGHING SOLUTIONS INC.

SALES – SERVICE – RENTALS
3310 N. HARLEM AVENUE
CHICAGO, IL 60634

PHONE
773-836-2800
FAX
773-836-2891

September 26, 2012
Mrs. Jenna Macchione
Mostardi-Platt
888 Industrial Drive
Elmhurst, IL. 60126

The following is a calibration report for one weight set #02. Weights were calibrated on an Ohaus balance M/N GA110 S/N 2528, against Weighing Solutions Weight set S/N E559.

Nominal value	As Found
500mg.	0.5000gm.
1gm.	1.0000gm,
5gm.	5.0000gm.

Calibrated by

State Of Illinois Registration Number 678

STATE OF ILLINOIS
WEIGHING SOLUTIONS
NO. 1604
REGISTERED SCALE AGENCY

© Mostardi Platt

State of Illinois

Department of Agriculture

Registration Number: 1604

Expires: 02/28/2013

Bureau of Weights and Measures

Registered Service Company Certificate of Registration

This is to certify that the named company has met all requirements for registration with this office for weighing devices.

Bureau Chief
Bureau of Weights & Measures

Issued To:

WEIGHING SOLUTIONS, INC.
3310-14 N HARLEM AVE
CHICAGO, IL 60634

© Mostardi Platt

Registered Technician - Registration Cards

STATE OF ILLINOIS
DEPARTMENT OF AGRICULTURE
Registered Technician:
0678 LITTLE, JAMES M
Registered Service Company:
1604 WEIGHING SOLUTIONS, INC.
Registered For:
Scale
Expires February 28, 2013

Registered Technician's Signature

The Department of Agriculture requires that all persons selling, installing, servicing, repairing, or reconditioning weighing or measuring devices used in trade or commerce be registered.

This Technician has met all of the qual ifications of the State of Illinois and is currently registered with the Illinois Department of Agriculture in good standing.

Bureau of Weights & Measures
Telephone (217) 785-8301

IL406-1122 X021-406-0030

© Mostardi Platt

RLWS Mass Value CERTIFICATE

Contractor: Weighing Solutions Inc
PO Box 95
River Grove, IL 60171-0095

Purchase Order #: 5403
Client: Weighing Solutions Inc
Address: 3310 N Harlem Ave

City & State: Chicago, IL 60634
Date Received: 27 OCT 2010
Date Calibrated: 02 NOV 2010
Temperature Range: 20.70 to 21.28 °C
Pressure Range: 740.9 to 741.3 mmHg
Relative Humidity Range: 49 to 50 %
Air Density: 1.1634 to 1.1663 mg/cm³
Traceable Report #: 1680311A
NIST Certificate #: 822/274081-06, 822/278785-10
Tested By: 12
Procedure: Modified Substitution (WI05-0023)
Contractor Req Recall Date: 2 Years
Primary Standard Calibration Date: 11/03/06, 10/21/09 **Due:** 11/03/10, 10/21/13
Description of Weights: 1 mg to 100 g Polished Weight Set, Class "1", S/N E559
Although there are two NIST numbers, one or both may apply.

☒ Indicates As Found >= Tol

Nominal Value	Id.	Conventional Mass Corr. As Found (mg)	Conventional Mass Corr. As Left (mg)	Unc. K=2 (mg)	Tol. (mg)	Balance Used	Standard Set Used	Calibrated/due MM-DD-YY/MM-DD-YY	Assumed Density (g/cm³)
1 mg		0.00507	0.00507	0.00072	0.010	501Q	K594Q	08-17-10/11-17-10	7.95
2 mg		0.00277	0.00277	0.00065	0.010	501Q	K594Q	08-17-10/11-17-10	7.95
2 mg	.	0.00519	0.00519	0.00065	0.010	501Q	K594Q	08-17-10/11-17-10	7.95
5 mg		0.00405	0.00405	0.00071	0.010	501Q	K594Q	08-17-10/11-17-10	7.95
10 mg		-0.00211	-0.00211	0.00086	0.010	501Q	K594Q	08-17-10/11-17-10	7.95
20 mg		-0.00274	-0.00274	0.00074	0.010	501Q	K594Q	08-17-10/11-17-10	7.95
20 mg	.	-0.00409	-0.00409	0.00074	0.010	501Q	K594Q	08-17-10/11-17-10	7.95
50 mg		0.00692	0.00692	0.00092	0.010	501Q	K594Q	08-17-10/11-17-10	7.95
100 mg		-0.0050	-0.0050	0.0013	0.010	501Q	K594Q	08-17-10/11-17-10	7.95
200 mg		-0.0032	-0.0032	0.0012	0.010	501Q	K594Q	08-17-10/11-17-10	7.95
200 mg	.	-0.0017	-0.0017	0.0012	0.010	501Q	K594Q	08-17-10/11-17-10	7.95
500 mg		-0.0062	-0.0062	0.0013	0.010	501Q	K594Q	08-17-10/11-17-10	7.95
1 g		-0.0184	-0.0184	0.0018	0.034	501Q	K594Q	08-17-10/11-17-10	7.95
2 g		0.0125	0.0125	0.0017	0.034	501Q	K594Q	08-17-10/11-17-10	7.95
2 g	.	0.0185	0.0185	0.0017	0.034	501Q	K594Q	08-17-10/11-17-10	7.95
5 g		-0.0539	0.0103	☒ 0.0036	0.034	501Q	K594Q	08-17-10/11-17-10	7.95
10 g		-0.0290	-0.0290	0.0099	0.050	676Q	K594Q	08-17-10/11-17-10	7.95
20 g		0.0569	0.0569	0.0095	0.074	676Q	K594Q	08-17-10/11-17-10	7.95
20 g	.	-0.0431	-0.0431	0.0095	0.074	676Q	K594Q	08-17-10/11-17-10	7.95
50 g		0.075	0.075	0.017	0.12	1183Q	K594Q	08-17-10/11-17-10	7.95
100 g		-0.049	-0.049	0.028	0.25	1183Q	K594Q	08-17-10/11-17-10	7.95

Check with your local state agency for certification of compliance on legal-for-trade items.

Prepared By:

RICE LAKE WEIGHING SYSTEMS
Commitment Beyond Measurement®

230 West Coleman Street • Rice Lake, WI 54868 • USA
TEL: 715-234-9171 • FAX: 715-234-6967

Page 1 of 1 Page

Dated 02 NOV 2010

Dan Demers Metrologist

This report is not to be used to claim product endorsement by Rice Lake Weighing Systems or any agency of the U.S. Government.
This document shall not be reproduced, except in full, without the written approval of Rice Lake Weighing Systems' Metrology Laboratory.
The above uncertainty does not include a component for magnetic property or handling and use.

PN 38914 8/08

RLWS Mass Value CERTIFICATE

Contractor:	**Weighing Solutions Inc** PO Box 95 River Grove, IL 60171-0095
Purchase Order #:	5403
Client:	**Weighing Solutions Inc**
Address:	3310 N Harlem Ave
City & State:	Chicago, IL 60634
Date Received:	27 OCT 2010
Date Calibrated:	01 NOV 2010 to 02 NOV 2010
Temperature Range:	20.80 to 21.78 °C
Pressure Range:	740.9 to 741.3 mmHg
Relative Humidity Range:	49 to 50 %
Air Density:	1.1611 to 1.1659 mg/cm³
Traceable Report #:	1680311
NIST Certificate #:	822/274081-06, 822/278785-10
Tested By:	12
Procedure:	Modified Substitution (WI05-0023)
Contractor Req Recall Date:	2 Years
Primary Standard Calibration Date:	11/03/06, 10/21/09 **Due:** 11/03/10, 10/21/13
Description of Weights: Although there are two NIST numbers, one or both may apply.	100 g, Polished Weight, 50 g to 5 kg Satin Finish Weights & 5-10 kg Satin Finish Grip Handle Weights, Class "2", Set S/N 5661

Nominal Value	Id.	Conventional Mass Corr. As Found (mg)	Conventional Mass Corr. As Left (mg)	Unc. K=2 (mg)	Tol. (mg)	Balance Used	Standard Set Used	Calibrated/due MM-DD-YY/MM-DD-YY	Assumed Density (g/cm³)
50 g		-0.136	-0.136	0.017	0.25	1183Q	K594Q	08-17-10/11-17-10	7.85
100 g		-0.177	-0.177	0.028	0.50	1183Q	K594Q	08-17-10/11-17-10	7.84
100 g	.	-0.232	-0.232	0.028	0.50	1183Q	K594Q	08-17-10/11-17-10	8.00
200 g		0.164	0.164	0.048	1.0	619Q	K594Q	08-17-10/11-17-10	7.84
300 g		-1.082	-1.082	0.062	1.5	619Q	K594Q	08-17-10/11-17-10	7.84
400 g		-1.085	-1.085	0.082	1.5	619Q	K594Q	08-17-10/11-17-10	7.84
1 kg		0.02	0.02	0.12	5.0	619Q	K594Q	08-17-10/11-17-10	7.84
1 kg	..	1.29	1.29	0.12	5.0	619Q	K594Q	08-17-10/11-17-10	7.85
3 kg		-6.31	-6.31	0.70	15	975Q	K594Q	08-17-10/11-17-10	7.84
5000 g		-0.75	-0.75	0.84	25	975Q	K594Q	08-17-10/11-17-10	7.84
10 kg	.	11.5	11.5	1.6	50	975Q	K594Q	08-17-10/11-17-10	7.84
10 kg	..	16.7	16.7	1.6	50	975Q	K594Q	08-17-10/11-17-10	7.84
10 kg	...	12.8	12.8	1.6	50	975Q	K594Q	08-17-10/11-17-10	7.84
10 kg	....	12.9	12.9	1.6	50	975Q	K594Q	08-17-10/11-17-10	7.84
10 kg	.....	16.3	16.3	1.6	50	975Q	K594Q	08-17-10/11-17-10	7.84

Check with your local state agency for certification of compliance on legal-for-trade items.

Prepared By:

RICE LAKE WEIGHING SYSTEMS
Commitment Beyond Measurement

230 West Coleman Street • Rice Lake, WI 54868 • USA
TEL: 715-234-9171 • FAX: 715-234-6967

Page 1 of 1 Page

Dated 02 NOV 2010

Dan Demers Metrologist

This report is not to be used to claim product endorsement by Rice Lake Weighing Systems or any agency of the U.S. Government.
This document shall not be reproduced, except in full, without the written approval of Rice Lake Weighing Systems' Metrology Laboratory.
The above uncertainty does not include a component for magnetic property or handling and use.

PN 38914 8/08

WEIGHING SOLUTIONS INC.

SALES-SERVICE-RENTALS
3310-14 N. HARLEM AVENUE
CHICAGO, IL 60634

PHONE
773-836-2800
FAX
773-836-2891

CALIBRATION REPORT

Company Name MOSTARDI-PLATT

Date SEPTEMBER 26, 2012

Location LAB

Weight Set # E 559

Model # GA 110

Serial/ID # 2528

Manufacturer OHAUS

Tolerance ± 0.05%

		Before Cal.:	After Cal.:
Capacity	110 g		
Readability	0.1mg		
Weight # 1	0.1mg	0.0001g	0.0001g
Weight # 2	1g	1.0001g	1.0000g
Weight # 3	10g	10.0003g	10.0000g
Weight # 4	50g	50.0006g	50.0000g
Weight # 5	100g	100.0011g	100.0000g

	Accept	Reject
Linearity	✓	
Cornerload	✓	
Repeatability	✓	
Hysteresis	✓	

Comments Cleaned and adjusted calibration to N.I.S.T. specifications.

Technician

678
State Of IL Registration

STATE OF ILLINOIS
WEIGHING SOLUTIONS
NO. 1604
REGISTERED SCALE AGENCY

© Mostardi Platt

Pre/Post	Date	Time	Analyst	Ambient Temperature degrees F	Relative Humidity %	Barometric Pressure inches Hg	Calibration Standard 50.0000g	% Error	Calibration Standard 5.0000g	% Error	Calibration Standard 0.5000g	% Error
Pre	7/15/2013											
Post	7/15/2013											
Pre	7/16/2013	8:00am	MB	73	43.0	29.62	49.9993 g	0.00	4.9999 g	0.00	0.5002 g	-0.04
Post	7/16/2013	11:00 AM	MB	73	43.0	29.62	49.9993 g	0.00	4.9999 g	0.00	0.5002 g	-0.04
Pre	7/17/2013	7:00 AM	JMG	75	43.0	29.62	49.9993 g	0.00	4.9999 g	0.00	0.5002 g	-0.04
Post	7/17/2013	3:00 PM	JMG	75	40.0	29.65	49.9993 g	0.00	4.9999 g	0.00	0.5001 g	-0.02
Pre	7/18/2013											
Post	7/18/2013											
Pre	7/19/2013											
Post	7/19/2013											
Pre	7/22/2013											
Post	7/22/2013											
Pre	7/23/2013	12:00 PM	JMG	76	38.0	29.18	49.9995 g	0.00	5.0000 g	0.00	0.5001 g	-0.02
Post	7/23/2013	2:00 PM	JMG	76	38.0	29.18	49.9995 g	0.00	5.0000 g	0.00	0.5001 g	-0.02
Pre	7/24/2013	1:00 PM	JMG	75	31.0	29.38	49.9995 g	0.00	5.0000 g	0.00	0.5001 g	-0.02
Post	7/24/2013	4:15 PM	MLB	75	32.0	29.35	49.9995 g	0.00	5.0002 g	0.00	0.5003 g	-0.06
Pre	7/25/2013	8:00 AM	JMG	74	31.0	29.44	49.9995 g	0.00	5.0001 g	0.00	0.5002 g	-0.04
Post	7/25/2013	2:00 PM	JMG	74	31.0	29.49	49.9995 g	0.00	5.0001 g	0.00	0.5002 g	-0.04
Pre	7/26/2013	7:30 AM	JMG	74	32.0	29.32	49.9995 g	0.00	5.0001 g	0.00	0.5002 g	-0.04
Post	7/26/2013											
Pre	7/29/2013											
Post	7/29/2013											
Pre	7/30/2013	8:00 AM	JMG	73	38.0	29.35	49.9995 g	0.00	4.9998 g	0.00	0.5001 g	-0.02
Post	7/30/2013	5:00 PM	MLB	75	36.0	29.41	49.9995 g	0.00	4.9997 g	0.01	0.5001 g	-0.02
Pre	7/31/2013	7:30 AM	JMG	74	38.0	29.35	49.9995 g	0.00	4.9997 g	0.01	0.5001 g	-0.02
Post	7/31/2013	3:00 PM	JMG	74	38.0	29.40	49.9995 g	0.00	4.9999 g	0.00	0.5001 g	-0.02
Pre	8/1/2013											
Post	8/1/2013											
Pre	8/2/2013											
Post	8/2/2013											

Balance ID OHAUS Model Explorer
S/N 1973

© Mostardi Platt

CALIBRATION SUMMARY

Project Number: M133003
Client: U of Iowa - Oakdale
Test Location: Hurst Boiler Duct

Date: 7/24/13
Operator: JFR
Box Truck: 8

Analyzer Type, S/N, and Span	Cal Level	Cylinder ID Serial Number	Expected Cal Value	Actual Response	Difference As % of Span	Cylinder Pressure (psi)	Cylinder Expiration Date
NO_x	Zero		0.0				
	Mid	CC266735	45.54			700	11/14/15
	High	CC422847	90.02			650	11/27/20
SO_2	Zero						
	Mid						
	High						
CO_2	Zero		0.0				
	Mid	CC273823	10.08			600	1/3/21
	High	CC179549	18.70			500	7/12/15
O_2	Zero		0.0				
	Mid	SG9170113BAL	11.99			1800	4/2/21
	High	CC51395	22.17			650	6/25/15
CO	Zero		0.0				
	Mid	CC152730	15.18			1700	4/4/14
	High	CC68477	29.45			1900	3/28/14

NO_x 0611416295

CO 0405705 65

O_2/CO_2 0144D1/444C

© Mostardi Platt

Client:	University of Iowa	**Test Location:**	Hurst Boiler Exhaust Duct
Facility:	Oakdale Renewable Energy Plant	**Date:**	7/24/13
Project #:	M133003	**Operator:**	Jim Robertson
Operating Condition:	Normal		

			Point Markings (including port length):	
Probe Length:		ft	**Point #**	**Inches**
Probe Type:	Extractive		1	13.01
Sample Plane:	Horizontal		2	27.00
Port Length:	6.00	in.	3	40.99
Port Size (diameter):	8	in.		
Port Type:	Flange			
Duct Shape:	Rectangular			
Length (traverse side of duct):	3.5	ft		
Width:	5.5	ft		
Location of Test Ports:	Side of duct			
Duct Area:	19.25	Sq. Ft.		
Equivalent Diameter Rectangular Duct:	4.278			
Upstream Diameters:	>.5			
Downstream Diameters:	>2			
Number of Ports Sampled:	5			
Number of Points per Port:	4			
Total Number of Traverse Points:	20			

Type	Setting	Cylinder ID	Cylinder Value	Analyzer Response	Difference, % of Span	Expiration Date	Final Bottle Pressure, PSI
NOx ppmvd	Zero		0	0.00	0.00%		
	Mid	CC266735	45.54	45.50	0.04%	11/14/2015	700
	High	CC422847	90.2	89.60	0.67%	11/27/2020	650
CO ppmvd	Zero		0	-0.10	0.34%		
	Mid	CC152730	15.18	15.20	-0.07%	4/4/2014	1700
	High	CC68477	29.45	29.70	-0.85%	3/28/2014	1900
O2 % (dry)	Zero		0	-0.01	0.05%		
	Mid	SG9170110BAL	11.99	11.98	0.05%	4/11/2021	1800
	High	CC51395	22.17	22.17	0.00%	6/25/2015	550
CO2 % (dry)	Zero		0	0.06	-0.32%		
	Mid	CC273823	10.06	10.12	-0.21%	1/3/2021	500
	High	CC179549	18.7	18.93	-1.23%	7/12/2015	650

Response Time Data

Type	RM Analyzer Make/Model	RM Analyzer s/n	Analyzer Span	RM Gas Span
NOx ppmvd	TECO 42i-HL	0811416295	100	90.2
CO ppmvd	TECO 48C	040570565	100	29.45
O2 % (dry)	Sevomex 1440	0144D1/4446	25	22.17
CO2 % (dry)	Sevomex 1440	0144D1/4446	20	19
	Start		95% Response	Time (min)
Upscale				1.5
Downscale				1.5

© Mostardi Platt

Client: University of Iowa
Facility: Oakdale Renewable Energy Plant
Fuel Type: Wood
Fuel Factor: 9335.82
Diluent: O2 %

Location: Hurst Boiler Exhaust Duct
Date: 7/24/13
Operator: Jim Robertson
Project #: M133003
Fuel Factor: by Standard

NOx ppmvd Correction Data

Run #	Cma	Precal	Postcal	Pre zero	Post zero	Co	Cm	C	Cgas	Span Bias	Span Drift	Zero Bias	Zero Drift
1	45.54	45.70	45.70	0.10	0.10	0.10	45.70	36.40	36.3	-0.22	0.00	-0.11	0.00
2	45.54	45.70	45.90	0.10	0.10	0.10	45.80	34.60	34.4	-0.44	0.22	-0.11	0.00
3	45.54	45.90	45.60	0.10	0.10	0.10	45.75	33.40	33.2	-0.11	-0.33	-0.11	0.00

CO ppmvd Correction Data

Run #	Cma	Precal	Postcal	Pre zero	Post zero	Co	Cm	C	Cgas	Span Bias	Span Drift	Zero Bias	Zero Drift
1	15.18	15.10	15.00	0.20	0.00	0.10	15.05	2.20	2.1	0.68	-0.34	-0.34	-0.68
2	15.18	15.00	15.10	0.00	0.00	0.00	15.05	2.10	2.1	0.34	0.34	-0.34	0.00
3	15.18	15.10	15.00	0.00	0.00	0.00	15.05	3.20	3.2	0.68	-0.34	-0.34	0.00

O2 % (dry) Correction Data

Run #	Cma	Precal	Postcal	Pre zero	Post zero	Co	Cm	C	Cgas	Span Bias	Span Drift	Zero Bias	Zero Drift
1	11.99	11.92	11.89	0.01	0.01	0.01	11.91	11.31	11.4	0.41	-0.14	-0.09	0.00
2	11.99	11.89	11.90	0.01	0.02	0.02	11.90	11.03	11.1	0.36	0.05	-0.14	0.05
3	11.99	11.90	11.88	0.02	0.01	0.02	11.89	11.02	11.1	0.45	-0.09	-0.09	-0.05

CO2 % (dry) Correction Data

Run #	Cma	Precal	Postcal	Pre zero	Post zero	Co	Cm	C	Cgas	Span Bias	Span Drift	Zero Bias	Zero Drift
1	10.08	10.08	10.09	0.07	0.07	0.07	10.09	9.36	9.4	0.16	0.05	-0.05	0.00
2	10.08	10.09	10.08	0.07	0.07	0.07	10.09	9.61	9.6	0.21	-0.05	-0.05	0.00
3	10.08	10.08	10.08	0.07	0.07	0.07	10.08	9.59	9.6	0.21	0.00	-0.05	0.00

Calibration Corrected Data

Run #	Run Date	Start Time	End Time	NOx ppmvd	CO2 % (dry)	O2 % (dry)	CO ppmvd
1	7/24/13	10:15	11:38	36.3	9.4	11.4	2.1
2	7/24/13	12:29	13:49	34.4	9.6	11.1	2.1
3	7/24/13	14:45	16:00	33.2	9.6	11.1	3.2

© Mostardi Platt

Client: University of Iowa
Facility: Oakdale Renewable Energy Plant
Project #: M133003
Test Location: Hurst Boiler Exhaust Duct
Operating Condition: Normal
Date: 7/24/13

Linearity Cal/Pre 1 Cal

Time	NOx ppmvd		CO ppmvd		O2 % (dry)		CO2 % (dry)	
7:06	45.50	im	0.00		0.02		0.05	
7:07	45.40		0.00		0.02		0.05	
7:08	45.60		0.00		0.03		0.05	
7:09	71.80		0.00		0.01		0.06	
7:10	89.60	ih	0.00		0.01		0.06	
7:11	89.30		0.00		0.01		0.06	
7:12	89.20		0.00		0.01		0.06	
7:13	58.10		0.00		17.60		0.06	
7:14	0.70		0.00		22.50		0.06	
7:15	0.10		0.10		22.51		0.06	
7:16	0.10		0.10		22.39		0.06	
7:17	0.00	iz	0.10		22.14		0.06	
7:18	0.00		0.10		22.16		0.06	
7:19	0.00		0.10		22.16		0.06	
7:20	0.00		0.10		22.17	ih	0.06	
7:21	0.00		0.10		22.17		0.06	
7:22	0.20		0.10		13.94		0.06	iz
7:23	0.00		0.10		11.98	im	0.06	
7:24	0.00		0.10		11.45		0.62	
7:25	0.20		-0.10		0.08		10.17	
7:26	0.00		-0.50		0.01		10.21	
7:27	0.00		-0.50		0.00		10.21	
7:28	0.00		-0.30		0.00		10.12	im
7:29	0.00		0.00		-0.01	iz	10.12	
7:30	0.20		0.00		0.04		18.63	
7:31	0.10		-0.10		-0.04		18.93	ih
7:32	0.10		-0.10	iz	0.07		14.47	
7:33	0.10		6.40		0.01		0.12	
7:34	0.00		15.20		0.01		0.09	
7:35	0.00		15.20	im	0.01		0.09	
7:36	0.00		15.20		0.04		0.11	
7:37	0.00		19.00		0.01		0.08	
7:38	0.00		28.80		0.00		0.07	
7:39	0.00		29.70	ih	0.00		0.07	
7:48	45.20		0.60		0.02		0.06	
7:49	45.20		0.60		0.02		0.06	
7:50	37.60		2.00		0.02		0.06	
7:51	1.00		12.20		0.02		0.06	
7:52	0.10		15.10		0.02		0.06	
7:53	0.10		15.20		0.02		0.05	
7:54	0.10		15.20		0.01		0.05	
7:55	0.10		14.20		0.00		5.82	
7:56	0.10		3.90		-0.01		10.02	
7:57	0.10		0.10		-0.02		10.04	
7:58	0.10		0.10		-0.02		10.06	
7:59	0.10		0.10		-0.01		10.07	
8:00	0.10		0.10		7.72		3.32	
8:01	0.10		0.50		11.84		0.11	
8:02	0.10		0.60		11.85		0.09	
8:03	0.10		0.60		11.90		0.08	
8:07	0.10		10.50		1.44		0.06	
8:08	0.10		29.60		0.04		0.06	
8:09	0.10		12.70		0.01		9.33	
8:13	0.10		22.90		7.16		0.10	
8:14	0.00		49.70		0.02		0.06	
9:24	45.90		0.60		0.02		0.08	
9:25	45.70	m	0.60		0.02		0.08	
9:26	45.00		0.90		0.03		0.08	
9:27	11.30		12.60		0.02		0.07	z
9:28	0.20		15.10	m	0.02		0.07	
9:29	0.10		15.10		0.02		0.07	
9:30	0.10	z	7.50		10.47		0.07	
9:31	0.10		0.60		11.90		0.08	
9:32	0.10		0.60		11.91		0.08	
9:33:00	0.20		0.60		11.91		0.08	
9:34:00	0.30		0.60		11.92	m	0.08	
9:19:00	0.10		0.10		0.01	z	10.08	m
9:20:00	4.90		0.20	z	0.03		3.56	
9:21:00	42.20		0.60		0.03		0.13	
9:22:00	46.00		0.60		0.03		0.10	
9:23:00	45.90		0.60		0.03		0.09	

© Mostardi Platt

Client: University of Iowa
Facility: Oakdale Renewable Energy Plant
Project #: M133003

Test Location: Hurst Boiler Exhaust Duct
Operating Condition: Normal
Date: 7/24/13

Post 1/Pre 2

Time	NOx ppmvd		CO ppmvd		O2 % (dry)		CO2 % (dry)	
11:48	0.10	z	0.00	z	0.01	z	10.09	m
11:49	0.10		0.00		0.01		10.09	
11:50	9.90		0.10		0.03		2.83	
11:51	44.90		0.40		0.03		0.13	
11:52	45.70	m	0.50		0.03		0.11	
11:53	45.40		0.50		0.03		0.10	
11:54	17.90		5.20		0.02		0.09	
11:55	0.20		14.50		0.02		0.08	
11:56	0.10		15.00		0.02		0.08	
11:57	0.10		15.00	m	0.02		0.07	
11:58	0.10		12.30		10.11		0.07	
11:59	0.10		2.10		11.89	m	0.07	z

Post 2/Pre 3

Time	NOx ppmvd		CO ppmvd		O2 % (dry)		CO2 % (dry)	
13:52	0.60		0.60		0.03		10.06	
13:53	0.10	z	0.00	z	0.02	z	10.06	m
13:54	15.90		0.10		0.05		1.78	
13:55	45.90		0.50		0.04		0.13	
13:56	46.00		0.60		0.03		0.11	
13:57	45.90	m	0.60		0.03		0.10	
13:58	25.10		3.00		0.03		0.09	
13:59	0.20		13.40		0.02		0.08	
14:00	0.10		15.10	m	0.02		0.08	
14:01	0.10		13.30		8.43		0.08	
14:02	0.10		3.00		11.89		0.07	z
14:03	0.10		0.60		11.90	m	0.08	

Post 3

Time	NOx ppmvd		CO ppmvd		O2 % (dry)		CO2 % (dry)	
16:04	0.10	z	0.00	z	0.01	z	10.08	m
16:05	0.30		0.00		0.01		9.25	
16:06	25.40		0.10		0.03		0.23	
16:07	45.60	m	0.50		0.03		0.13	
16:08	45.30		0.50		0.03		0.11	
16:09	44.50		0.70		0.03		0.10	
16:10	8.90		8.30		0.02		0.09	
16:11	0.20		14.90		0.02		0.09	
16:12	0.10		15.00	m	0.02		0.08	
16:13	0.10		13.50		8.13		0.08	
16:14	0.10		3.20		11.87		0.07	
16:15	0.10		0.60		11.88	m	0.07	z

© Mostardi Platt

NO2 to NO Converter Test

Client: University of Iowa
Facility: Oakdale Renewable Energy Plant
Location: Hurst Boiler Exhaust Duct
Date: 7/24/13
Project #: M133003

Conv. Temp: 633 °C
Max: 41.6 ppm
Min: 41.0 ppm
% of Max: 1.44 %

Pre-Calibration			Test			Post-Calibration		Cal
Time	NO_x	Cal Flag	Time	NO_x		Time	NO_x	Flag
0:12	0.2	z	0:39	41.6	Max	1:15:00	0.3	z
0:13	12.9		0:40	41.6	Max	1:16:00	5.4	
0:14	91.3		0:41	41.5		1:17:00	39.5	
0:15	93.5		0:42	41.3		1:18:00	45.4	
0:16	90.0		0:43	41.3		1:19:00	45.7	m
0:17	90.4	h	0:44	41.3				
0:18	84.5		0:45	41.3				
0:19	21.2		0:46	41.3				
0:20	15.8		0:47	41.2				
0:21	17.5		0:48	41.2				
0:22	30.6		0:49	41.3				
0:23	46.6		0:50	41.3				
0:24	46.6		0:51	41.3				
0:25	46.2	m	0:52	41.3				
			0:53	41.4				
			0:54	41.4				
			0:55	41.4				
			0:56	41.4				
			0:57	41.4				
			0:58	41.4				
			0:59	41.4				
			1:00	41.2				
			1:01	41.1				
			1:02	41.1				
			1:03	41.1				
			1:04	41.1				
			1:05	41.1				
			1:06	41.1				
			1:07	41.0	Min			
			1:08	41.0	Min			
			1:09	41.1				

PRE-CAL RESULT

zero	0.2
mid	0.73%
high	0.22%

POST-CAL RESULT

zero	0.3
mid	0.18%

Type		RM Analyzer Make/Model	RM Analyzer s/n	Analyzer Span	RM Gas Span		
NOx ppmvd		TECO 42I-HL	0611416295	90.2	90.2		
Type	Setting	Cylinder ID	Cylinder Value	Analyzer Response	Difference, % of Span	Expiration Date	Final Bottle Pressure, PSI
NOx ppmvd	Zero	0	0	0.20	-0.22%	1/0/1900	0
	Mid	CC266735	45.54	46.20	-0.73%	11/14/2015	700
	High	CC422847	90.2	90.40	-0.22%	11/27/2020	650

© Mostardi Platt

Client: University of Iowa
Facility: Oakdale Renewable Energy Plant
Project #: M133003

Location: Hurst Boiler Exhaust Duct
Date: 7/23/13
Operator: Jim Robertson

Calibration Gases

Type	Setting	Cylinder ID	Cylinder Value	Analyzer Response	Difference, % of Span	Expiration Date	Final Bottle Pressure, PSI
O2 %	Zero		0	-0.01	0.05%		
	Mid	SG917011BAL	11.99	12.00	-0.05%	4/11/2021	
	High	CC51395	22.17	22.18	-0.05%	6/25/2015	
CO2 %	Zero		0	0.03	-0.18%		
	Mid	CC273823	10.08	10.02	0.32%	1/3/2021	
	High	CC179549	18.7	18.74	-0.21%	7/12/2015	

Response Time Data

Type	RM Analyzer s/n	Analyzer Span	RM Gas Span
O2 %	0144D1/4446	25	22.17
CO2 %	0144D1/4446	20	18.7
	Start	95% Response	Time (min)
Upscale			
Downscale			

© Mostardi Platt

Client: University of Iowa
Facility: Oakdale Renewable Energy Plant
Fuel Type: Wood
Fuel Factor: 9240
Diluent: O2 %

Location: Hurst Boiler Exhaust Duct
Date: 7/23/13
Operator: Jim Robertson
Project #: M133003
Fuel Factor: by Standard

O2 % Correction Data

Run #	Cma	Precal	Postcal	Pre zero	Post zero	Co	Cm	C	Cgas	Span Bias	Span Drift	Zero Bias	Zero Drift
1-1	11.99	11.98	11.98	0.03	0.00	0.02	11.98	10.06	10.1	0.09	0.00	-0.05	-0.14
1-2	11.99	11.98	11.98	0.00	0.00	0.00	11.98	9.71	9.7	0.09	0.00	-0.05	0.00
1-3	11.99	11.98	11.98	0.00	0.00	0.00	11.98	9.53	9.5	0.09	0.00	-0.05	0.00

CO2 % Correction Data

Run #	Cma	Precal	Postcal	Pre zero	Post zero	Co	Cm	C	Cgas	Span Bias	Span Drift	Zero Bias	Zero Drift
1-1	10.08	10.07	10.10	0.08	0.07	0.08	10.09	10.60	10.6	-0.43	0.16	-0.21	-0.05
1-2	10.08	10.10	10.10	0.07	0.07	0.07	10.10	10.90	10.9	-0.43	0.00	-0.21	0.00
1-3	10.08	10.10	10.10	0.07	0.07	0.07	10.10	11.10	11.1	-0.43	0.00	-0.21	0.00

Cma = Concentration of Cal Gas
Cm=Average Pre and Post Span
C = Average value of test
Cgas = Corrected gas value of test
Co=Average Pre and Post Zero

Calibration Corrected Data

Run #	Run Date	Start Time	End Time	CO2 %	O2 %
1-1	7/23/13	12:05	13:05	10.6	10.1
1-2	7/23/13	13:05	14:05	10.9	9.7
1-3	7/23/13	14:05	15:01	11.1	9.5
Average				10.9	9.8

© Mostardi Platt

Client: University of Iowa
Facility: Oakdale Renewable Energy Plant
Location: Hurst Boiler Exhaust Duct
Date: 7/23/13
Project #: M133003

Linearity Cal/Pre 1 Cal

Time	O2 %		CO2 %	
7:16	0.03		18.74	ih
7:17	-0.01	iz	18.73	
7:18	0.09		13.25	
7:19	0.00		10.02	im
7:20	13.35		3.94	
7:21	22.18	ih	0.06	
7:22	22.19		0.05	
7:23	19.92		0.07	
7:24	12.00	im	0.03	iz
7:30	0.02		10.03	
7:31	1.43		8.87	
7:32	11.77		0.18	
7:33	11.84		0.07	
7:34	11.85		0.05	
7:35	11.88		0.04	
7:36	11.94		0.04	
11:52	0.03	z	10.07	m
11:53	0.97		9.26	
11:54	11.78		0.20	
11:55	11.98		0.10	
11:56	11.98	m	0.08	z

© Mostardi Platt

Client: University of Iowa
Facility: Oakdale Renewable Energy Plant
Project #: M133003

Location: Hurst Boiler Exhaust Duct
Date: 7/23/13

Post 1-1/Pre 1-2

Time	O2 %		CO2 %	
16:32	0.01		10.10	m
16:33	0.01		10.10	
16:34	0.00	z	10.10	
16:35	0.00		10.11	
16:36	0.00		10.11	
16:37	4.42		6.33	
16:38	11.93		0.15	
16:39	11.96		0.11	
16:40	11.97		0.10	
16:41	11.98		0.09	
16:42	11.98		0.08	
16:43	11.98	m	0.07	z

Post 1-2/Pre 1-3

Time	O2 %		CO2 %	
16:32	0.01		10.10	m
16:33	0.01		10.10	
16:34	0.00	z	10.10	
16:35	0.00		10.11	
16:36	0.00		10.11	
16:37	4.42		6.33	
16:38	11.93		0.15	
16:39	11.96		0.11	
16:40	11.97		0.10	
16:41	11.98		0.09	
16:42	11.98		0.08	
16:43	11.98	m	0.07	z

Post 1-3

Time	O2 %		CO2 %	
16:32	0.01		10.10	m
16:33	0.01		10.10	
16:34	0.00	z	10.10	
16:35	0.00		10.11	
16:36	0.00		10.11	
16:37	4.42		6.33	
16:38	11.93		0.15	
16:39	11.96		0.11	
16:40	11.97		0.10	
16:41	11.98		0.09	
16:42	11.98		0.08	
16:43	11.98	m	0.07	z

© Mostardi Platt

Client: University of Iowa
Facility: Oakdale Renewable Energy Plant
Fuel Type: Coal, Sub-Bituminous
Fuel Factor: 9820
Diluent: O2 %

Location: Hurst Boiler Exhaust Duct
Date: 7/23/13
Operator: Jim Robertson
Project #: M133003
Fuel Factor: by Standard

O2 % Correction Data

Run #	Cma	Precal	Postcal	Pre zero	Post zero	Co	Cm	C	Cgas	Span Bias	Span Drift	Zero Bias	Zero Drift
2-1	11.99	11.98	11.98	0.00	0.00	0.00	11.98	10.95	11.0	0.09	0.00	-0.05	0.00
2-2	11.99	11.98	11.98	0.00	0.00	0.00	11.98	10.60	10.6	0.09	0.00	-0.05	0.00
2-3	11.99	11.98	11.98	0.00	0.00	0.00	11.98	9.91	9.9	0.09	0.00	-0.05	0.00

CO2 % Correction Data

Run #	Cma	Precal	Postcal	Pre zero	Post zero	Co	Cm	C	Cgas	Span Bias	Span Drift	Zero Bias	Zero Drift
2-1	10.08	10.10	10.12	0.07	0.12	0.10	10.11	9.80	9.8	-0.53	0.11	-0.48	0.27
2-2	10.08	10.12	10.12	0.12	0.12	0.12	10.12	10.10	10.1	-0.53	0.00	-0.48	0.00
2-3	10.08	10.12	10.12	0.12	0.12	0.12	10.12	10.80	10.8	-0.53	0.00	-0.48	0.00

Cma = Concentration of Cal Gas
Cm=Average Pre and Post Span
C = Average value of test
Cgas = Corrected gas value of test
Co=Average Pre and Post Zero

Calibration Corrected Data

Run #	Run Date	Start Time	End Time	CO2 %	O2 %
2-1	7/23/13	17:03	18:03	9.8	11.0
2-2	7/23/13	18:03	19:03	10.1	10.6
2-3	7/23/13	19:03	19:54	10.8	9.9
Average				10.2	10.5

© Mostardi Platt

Client: University of Iowa
Facility: Oakdale Renewable Energy Plant
Location: Hurst Boiler Exhaust Duct
Date: 7/23/13
Project #: M133003

Linearity Cal/Pre 2 Cal

Time	O2 %		CO2 %	
7:16	0.03		18.74	ih
7:17	-0.01	iz	18.73	
7:18	0.09		13.25	
7:19	0.00		10.02	im
7:20	13.35		3.94	
7:21	22.18	ih	0.06	
7:22	22.19		0.05	
7:23	19.92		0.07	
7:24	12.00	im	0.03	iz
16:32	0.01		10.10	m
16:33	0.01		10.10	
16:34	0.00	z	10.10	
16:35	0.00		10.11	
16:36	0.00		10.11	
16:37	4.42		6.33	
16:38	11.93		0.15	
16:39	11.96		0.11	
16:40	11.97		0.10	
16:41	11.98		0.09	
16:42	11.98		0.08	
16:43	11.98	m	0.07	z

© Mostardi Platt

Client: University of Iowa
Facility: Oakdale Renewable Energy Plant
Project #: M133003

Location: Hurst Boiler Exhaust Duct
Date: 7/23/13

Post 2-1/Pre 2-2

Time	O2 %		CO2 %	
20:18	0.00	z	10.12	m
20:19	0.00		10.12	
20:20	5.34		5.58	
20:21	11.96		0.16	
20:22	11.98	m	0.12	z

Post 2-2/Pre 2-3

Time	O2 %		CO2 %	
20:18	0.00	z	10.12	m
20:19	0.00		10.12	
20:20	5.34		5.58	
20:21	11.96		0.16	
20:22	11.98	m	0.12	z

Post 2-3

Time	O2 %		CO2 %	
20:18	0.00	z	10.12	m
20:19	0.00		10.12	
20:20	5.34		5.58	
20:21	11.96		0.16	
20:22	11.98	m	0.12	z

© Mostardi Platt

Client: University of Iowa
Facility: Oakdale Renewable Energy Plant
Fuel Type: Coal, Sub-Bituminous
Fuel Factor: 9820
Diluent: O2 %

Location: Hurst Boiler Exhaust Duct
Date: 7/23&24/2013
Operator: Jim Robertson
Project #: M133003
Fuel Factor: by Standard

O2 % Correction Data

Run #	Cma	Precal	Postcal	Pre zero	Post zero	Co	Cm	C	Cgas	Span Bias	Span Drift	Zero Bias	Zero Drift
3-1	11.99	11.98	12.01	0.00	0.02	0.01	12.00	10.14	10.1	-0.05	0.14	-0.14	0.09
3-2	11.99	12.01	12.01	0.02	0.02	0.02	12.01	10.73	10.7	-0.05	0.00	-0.14	0.00
3-3	11.99	12.01	12.01	0.02	0.02	0.02	12.01	10.24	10.2	-0.05	0.00	-0.14	0.00

CO2 % Correction Data

Run #	Cma	Precal	Postcal	Pre zero	Post zero	Co	Cm	C	Cgas	Span Bias	Span Drift	Zero Bias	Zero Drift
3-1	10.08	10.12	10.13	0.12	0.10	0.11	10.13	10.60	10.6	-0.59	0.05	-0.37	-0.11
3-2	10.08	10.13	10.13	0.10	0.10	0.10	10.13	10.10	10.0	-0.59	0.00	-0.37	0.00
3-3	10.08	10.13	10.13	0.10	0.10	0.10	10.13	10.50	10.5	-0.59	0.00	-0.37	0.00

Cma = Concentration of Cal Gas
Cm=Average Pre and Post Span
C = Average value of test
Cgas = Corrected gas value of test
Co=Average Pre and Post Zero

Calibration Corrected Data

Run #	Run Date	Start Time	End Time	CO2 %	O2 %
3-1	7/23/13	21:18	22:18	10.6	10.1
3-2	7/23/13	22:18	23:18	10.0	10.7
3-3	7/23&24/13	23:18	0:05	10.5	10.2
Average				10.4	10.3

© Mostardi Platt

Client: University of Iowa
Facility: Oakdale Renewable Energy Plant
Location: Hurst Boiler Exhaust Duct
Date: 7/23&24/2013
Project #: M133003

Linearity Cal/Pre 3 Cal

Time	O2 %		CO2 %	
7:16	0.03		18.74	ih
7:17	-0.01	iz	18.73	
7:18	0.09		13.25	
7:19	0.00		10.02	im
7:20	13.35		3.94	
7:21	22.18	ih	0.06	
7:22	22.19		0.05	
7:23	19.92		0.07	
7:24	12.00	im	0.03	iz
20:18	0.00	z	10.12	m
20:19	0.00		10.12	
20:20	5.34		5.58	
20:21	11.96		0.16	
20:22	11.98	m	0.12	z

© Mostardi Platt

Client: University of Iowa
Facility: Oakdale Renewable Energy Plant
Project #: M133003

Location: Hurst Boiler Exhaust Duct
Date: 7/23&24/2013

Post 3-1/Pre 3-2

Time	O2 %		CO2 %	
0:08	0.06		10.09	
0:09	0.02	z	10.13	m
0:10	9.84		1.85	
0:11	12.00		0.12	
0:12	12.01	m	0.10	z

Post 3-2/Pre 3-3

Time	O2 %		CO2 %	
0:08	0.06		10.09	
0:09	0.02	z	10.13	m
0:10	9.84		1.85	
0:11	12.00		0.12	
0:12	12.01	m	0.10	z

Post 3-3

Time	O2 %		CO2 %	
0:08	0.06		10.09	
0:09	0.02	z	10.13	m
0:10	9.84		1.85	
0:11	12.00		0.12	
0:12	12.01	m	0.10	z

© Mostardi Platt

Appendix I - Gas Cylinder Calibration Sheets

© Mostardi Platt

Airgas

Airgas Specialty Gases
12722 South Wentworth Avenue
Chicago, IL 60628
(773) 785-3000 Fax: (773) 785-1928
www.airgas.com

CERTIFICATE OF ANALYSIS
Grade of Product: EPA Protocol

Part Number:	E02NI99E15A0163	Reference Number:	54-124345626-1
Cylinder Number:	CC266735	Cylinder Volume:	144 Cu.Ft.
Laboratory:	ASG - Chicago - IL	Cylinder Pressure:	2015 PSIG
PGVP Number:	B12012	Valve Outlet:	660
Gas Code:	NO	Analysis Date:	Nov 14, 2012

Expiration Date: Nov 14, 2015

Certification performed in accordance with "EPA Traceability Protocol for Assay and Certification of Gaseous Calibration Standards (May 2012)" document EPA 600/R-12/531, using the assay procedures listed. Analytical Methodology does not require correction for analytical interference. This cylinder has a total analytical uncertainty as stated below with a confidence level of 95%. There are no significant impurities which affect the use of this calibration mixture. All concentrations are on a volume/volume basis unless otherwise noted.

Do Not Use This Cylinder below 100 psig, i.e. 0.7 megapascals.

ANALYTICAL RESULTS

Component	Requested Concentration	Actual Concentration	Protocol Method	Total Relative Uncertainty
NITRIC OXIDE	45.00 PPM	45.54 PPM	G1	+/- 1% NIST Traceable
NITROGEN	Balance			
Total oxides of nitrogen		45.62 PPM		For Reference Only

CALIBRATION STANDARDS

Type	Lot ID	Cylinder No	Concentration	Expiration Date
NTRM NO	10061118	CC283701	49.73PPM NITRIC OXIDE/	Jul 23, 2016

ANALYTICAL EQUIPMENT

Instrument/Make/Model	Analytical Principle	Last Multipoint Calibration
Nexus 470 AEP0000428	FTIR	Nov 05, 2012

Triad Data Available Upon Request

Notes:

Approved for Release

Page 1 of 54-124345626-1

© Mostardi Platt

NOX 2

Airgas

CERTIFICATE OF ANALYSIS
Grade of Product: EPA Protocol

Part Number:	E02NI99E15A3576	Reference Number:	54-124345626-2
Cylinder Number:	CC422847	Cylinder Volume:	144.3 CF
Laboratory:	ASG - Chicago - IL	Cylinder Pressure:	2015 PSIG
PGVP Number:	B12012	Valve Outlet:	660
Gas Code:	NO	Analysis Date:	Nov 27, 2012

Expiration Date: Nov 27, 2020

This cylinder has been analytically certified as directly traceable to NIST with a total analytical uncertainty as stated below with a confidence level of 95%, in accordance with Airgas ISO procedures. There are no significant impurities which affect the use of this calibration mixture. All concentrations are on a volume/volume basis unless otherwise noted.

Do Not Use This Cylinder Below 150 psig. i.e. 1 Mega Pascal

ANALYTICAL RESULTS

Component	Requested Concentration	Actual Concentration	Protocol Method	Total Relative Uncertainty
NITRIC OXIDE	90.00 PPM	90.20 PPM	G1	+/- 1% NIST Traceable
NITROGEN	Balance			
Total oxides of nitrogen		90.26 PPM		For Reference Only

CALIBRATION STANDARDS

Type	Lot ID	Cylinder No	Concentration	Expiration Date
NTRM/NO	11060518	CC331279	101.2 PPM NITRIC OXIDE/NITROGEN	Feb 16, 2017

ANALYTICAL EQUIPMENT

Instrument/Make/Model	Analytical Principle	Last Multipoint Calibration
Nexus 470 AEP0000428	FTIR	Nov 05, 2012

Triad Data Available Upon Request

Notes:

Approved for Release

Page 1 of 54-124345626-2

© Mostardi Platt

Airgas

CERTIFICATE OF ANALYSIS
Grade of Product: EPA Protocol

Part Number:	E02NI99E15A1129	Reference Number:	54-124258263-12
Cylinder Number:	CC152730	Cylinder Volume:	144.3 CF
Laboratory:	ASG - Chicago - IL	Cylinder Pressure:	2015 PSIG
PGVP Number:	NONPGVP	Valve Outlet:	350
Gas Code:	CO,BALN	Certification Date:	Apr 04, 2011

Expiration Date: Apr 04, 2019

Certification performed in accordance with "EPA Traceability Protocol for Assay and Certification of Gaseous Calibration Standards (May 2012)" document EPA 600/R-12/531, using the assay procedures listed. Analytical Methodology does not require correction for analytical interference. This cylinder has a total analytical uncertainty as stated below with a confidence level of 95%. There are no significant impurities which affect the use of this calibration mixture. All concentrations are on a volume/volume basis unless otherwise noted.

Do Not Use This Cylinder below 100 psig, i.e. 0.7 megapascals.

ANALYTICAL RESULTS

Component	Requested Concentration	Actual Concentration	Protocol Method	Total Relative Uncertainty	Assay Dates
CARBON MONOXIDE	15.00 PPM	15.19 PPM	G1	+/- 1% NIST Traceable	03/28/2011, 04/04/2011
NITROGEN	Balance				

CALIBRATION STANDARDS

Type	Lot ID	Cylinder No	Concentration	Uncertainty	Expiration Date
NTRM/CO	05120311	CC180115	49.33 PPM CARBON MONOXIDE/NITROGEN	+/- 0.7%	Feb 02, 2013

ANALYTICAL EQUIPMENT

Instrument/Make/Model	Analytical Principle	Last Multipoint Calibration
Nexus 470 AEP0000428	FTIR	Mar 25, 2011

Triad Data Available Upon Request

Notes:

Signature on file

Approved for Release

Page 1 of 54-124258263-12

© Mostardi Platt

Airgas

Airgas Specialty Gases
12722 S. Wentworth Avenue
Chicago, IL 60628
(773)-785-3000 Fax: (773)-785-1928
http://www.airgas.com

CERTIFICATE OF ANALYSIS
Grade of Product: EPA Protocol

Part Number:	E02NI99E15A1784	Reference Number:	54-124258410-10
Cylinder Number:	CC68477	Cylinder Volume:	144 Cu.Ft.
Laboratory:	ASG - Chicago - IL	Cylinder Pressure:	2015 PSIG
Analysis Date:	Mar 28, 2011	Valve Outlet:	350

Expiration Date: Mar 28, 2014

Certification performed in accordance with "EPA Traceability Protocol (Sept. 1997)" using the assay procedures listed. Analytical Methodology does not require correction for analytical interferences. This cylinder has a total analytical uncertainty as stated below with a confidence level of 95%. There are no significant impurities which affect the use of this calibration mixture. All concentrations are on a volume/volume basis unless otherwise noted.
Do Not Use This Cylinder below 150 psig.i.e. 1 Mega Pascal

ANALYTICAL RESULTS

Component	Requested Concentration	Actual Concentration	Protocol Method	Total Relative Uncertainty
CARBON MONOXIDE	29.00 PPM	29.45 PPM	G1	+/- 1% NIST Traceable
NITROGEN	Balance			

CALIBRATION STANDARDS

Type	Lot ID	Cylinder No	Concentration	Expiration Date
NTRM/CO	06120311	CC180115	49.33PPM CARBON MONOXIDE/NITROGEN	Feb 02, 2013

ANALYTICAL EQUIPMENT

Instrument/Make/Model	Analytical Principle	Last Multipoint Calibration
Nexus 470 AEP0000428	FTIR	Mar 25, 2011

Triad Data Available Upon Request

Notes:

Approved for Release

Page 1 of 54-124258410-10

Airgas

Airgas Specialty Gases
12722 South Wentworth Avenue
Chicago, IL 60628
(773)785-3000 Fax: (773) 785-1928
www.airgas.com

CERTIFICATE OF ANALYSIS
Grade of Product: EPA Protocol

Part Number:	E02NI88E15A3424	Reference Number:	54-124368948-1
Cylinder Number:	SG9170110BAL	Cylinder Volume:	145.4 CF
Laboratory:	ASG - Chicago - IL	Cylinder Pressure:	2015 PSIG
PGVP Number:	B12013	Valve Outlet:	590
Gas Code:	O2	Certification Date:	Apr 11, 2013

Expiration Date: Apr 11, 2021

Certification performed in accordance with "EPA Traceability Protocol for Assay and Certification of Gaseous Calibration Standards (May 2012)" document EPA 600/R-12/531, using the assay procedures listed. Analytical Methodology does not require correction for analytical interference. This cylinder has a total analytical uncertainty as stated below with a confidence level of 95%. There are no significant impurities which affect the use of this calibration mixture. All concentrations are on a volume/volume basis unless otherwise noted.

Do Not Use This Cylinder below 100 psig, i.e. 0.7 megapascals.

ANALYTICAL RESULTS

Component	Requested Concentration	Actual Concentration	Protocol Method	Total Relative Uncertainty	Assay Dates
OXYGEN	12.00 %	11.99 %	G1	+/- 1.0% NIST Traceable	04/11/2013
NITROGEN	Balance				

CALIBRATION STANDARDS

Type	Lot ID	Cylinder No	Concentration	Uncertainty	Expiration Date
NTRM/O2	06120211	CC195925	20.90 % OXYGEN/NITROGEN	+/- 0.4%	Dec 01, 2015

ANALYTICAL EQUIPMENT

Instrument/Make/Model	Analytical Principle	Last Multipoint Calibration
O2-1 HORIBA MPA-510 3VUYL9NR	Paramagnetic	Mar 29, 2013

Triad Data Available Upon Request

Notes:

Approved for Release

© Mostardi Platt

Airgas

Airgas Specialty Gases
12722 South Wentworth Avenue
Chicago, IL 60628
(773) 785-3000 Fax: (773) 785-1528
www.airgas.com

CERTIFICATE OF ANALYSIS
Grade of Product: EPA Protocol

Part Number:	E02NI78E15A0124	Reference Number:	54-124322863-2
Cylinder Number:	CC51395	Cylinder Volume:	146 Cu.Ft.
Laboratory:	ASG - Chicago - IL	Cylinder Pressure:	2015 PSIG
PGVP Number:	B12012	Valve Outlet:	590
Gas Code:	O2	Analysis Date:	Jun 25, 2012

Expiration Date: Jun 25, 2015

Certification performed in accordance with "EPA Traceability Protocol (Sept. 1997)" using the assay procedures listed. Analytical Methodology does not require correction for analytical interferences. This cylinder has a total analytical uncertainty as stated below with a confidence level of 95%. There are no significant impurities which affect the use of this calibration mixture. All concentrations are on a volume/volume basis unless otherwise noted.
Do Not Use This Cylinder below 150 psig.i.e. 1 Mega Pascal

ANALYTICAL RESULTS

Component	Requested Concentration	Actual Concentration	Protocol Method	Total Relative Uncertainty
OXYGEN	22.00 %	22.17 %	G1	+/- 1% NIST Traceable
NITROGEN	Balance			

CALIBRATION STANDARDS

Type	Lot ID	Cylinder No	Concentration	Expiration Date
NTRM/O2	06060810	CC206131	22.51% OXYGEN/NITROGEN	May 01, 2016

ANALYTICAL EQUIPMENT

Instrument/Make/Model	Analytical Principle	Last Multipoint Calibration
(O2-1)HORIBA MPA-510	Paramagnetic	May 27, 2012

Triad Data Available Upon Request

Notes:

Approved for Release

Page 1 of 54-124322863-2

© Mostardi Platt

Airgas

Airgas Specialty Gases
12722 South Wentworth Avenue
Chicago, IL 60628
(773) 785-3000 Fax: (773) 785-1928
www.airgas.com

CERTIFICATE OF ANALYSIS
Grade of Product: EPA Protocol

Part Number:	E02NI90E15A0123	Reference Number:	54-124352537-1
Cylinder Number:	CC273823	Cylinder Volume:	149.8 CF
Laboratory:	ASG - Chicago - IL	Cylinder Pressure:	2015 PSIG
PGVP Number:	B12013	Valve Outlet:	580
Gas Code:	CO2	Analysis Date:	Jan 03, 2013

Expiration Date: Jan 03, 2021

Certification performed in accordance with "EPA Traceability Protocol for Assay and Certification of Gaseous Calibration Standards (May 2012)" document EPA 600/R-12/531, using the assay procedures listed. Analytical Methodology does not require correction for analytical interference. This cylinder has a total analytical uncertainty as stated below with a confidence level of 95%. There are no significant impurities which affect the use of this calibration mixture. All concentrations are on a volume/volume basis unless otherwise noted.

Do Not Use This Cylinder below 100 psig, i.e. 0.7 megapascals.

ANALYTICAL RESULTS

Component	Requested Concentration	Actual Concentration	Protocol Method	Total Relative Uncertainty
CARBON DIOXIDE	10.00 %	10.08 %	G1	+/- 1% NIST Traceable
NITROGEN	Balance			

CALIBRATION STANDARDS

Type	Lot ID	Cylinder No	Concentration	Expiration Date
NTRM/CO2	06120405	CC184974	19.66 % CARBON DIOXIDE/NITROGEN	May 01, 2016

ANALYTICAL EQUIPMENT

Instrument/Make/Model	Analytical Principle	Last Multipoint Calibration
CO2-1 HORIBA VIA-510 V1E3H7P5	NDIR	Dec 28, 2012

Triad Data Available Upon Request

Notes:

Approved for Release

Page 1 of 54-124352537-1

© Mostardi Platt

Airgas

Airgas Specialty Gases
12722 South Wentworth Avenue
Chicago, IL 60628
(773) 785-3000 Fax: (773) 785-1928
www.airgas.com

CERTIFICATE OF ANALYSIS
Grade of Product: EPA Protocol

Part Number:	E02NI80E15ACMD7	Reference Number:	54-124326417-1
Cylinder Number:	CC179549	Cylinder Volume:	157 Cu.Ft.
Laboratory:	ASG - Chicago - IL	Cylinder Pressure:	2015 PSIG
PGVP Number:	B12012	Valve Outlet:	580
Gas Code:	CO2	Analysis Date:	Jul 12, 2012

Expiration Date: Jul 12, 2015

Certification performed in accordance with "EPA Traceability Protocol (Sept. 1997)" using the assay procedures listed. Analytical Methodology does not require correction for analytical interferences. This cylinder has a total analytical uncertainty as stated below with a confidence level of 95%. There are no significant impurities which affect the use of this calibration mixture. All concentrations are on a volume/volume basis unless otherwise noted.
Do Not Use This Cylinder below 150 psig.i.e. 1 Mega Pascal

ANALYTICAL RESULTS

Component	Requested Concentration	Actual Concentration	Protocol Method	Total Relative Uncertainty
CARBON DIOXIDE	19.50 %	18.70 %	G1	+/- 1% NIST Traceable
NITROGEN	Balance			

CALIBRATION STANDARDS

Type	Lot ID	Cylinder No	Concentration	Expiration Date
NTRM	97051204	SG9161079BAL	15.862% CARBON DIOXIDE/NITROGEN	May 01, 2016

ANALYTICAL EQUIPMENT

Instrument/Make/Model	Analytical Principle	Last Multipoint Calibration
Nexus 470 AEP0000428	FTIR	Jul 02, 2012

Triad Data Available Upon Request

Notes:

Approved for Release

Page 1 of 54-124326417-1

© Mostardi Platt

Appendix J - Mercury QA/QC Data

© Mostardi Platt

Spike Recovery Summary
Oakdale Renewable Energy Plant
Hurst Boiler Exhaust Duct
7/24/2013

Test Run	Start Time	End Time	Actual Concentration, ng	Expected Spike Concentration, ng	Sample Volume, standard liters	Recovery %
1A	10:18	11:18	22.6	N/A	104.512	
1B			45.7	25	93.516	101.91
2A	12:30	13:30	12.4	N/A	94.844	
2B			37.6	25	93.761	101.37
3A	14:45	15:45	10.6	N/A	94.449	
3B			33.5	25	93.474	92.04

© Mostardi Platt

HIGH-PURITY STANDARDS
www.highpuritystandards.com

Certificate of Analysis

Product Description:

Name:	Mercury	Source Material:	Mercury Metal
Part Number:	**100033-1**	Material Purity:	99.9998%
Lot Number:	**1216607**	Matrix:	2% (v/v) HNO_3

Certified Value: 1000 µg/mL ± 6 µg/mL

The Certified value is based on gravimetric and volumetric preparation, and confirmed against SRM 3133 (lot number 061204) by inductively coupled plasma optical emission spectrometry (ICP-OES) using an internal laboratory-developed method. The uncertainty in the certified value is calculated for a 95% confidence interval and coverage factor *k* is about 2.

Density: 1.009 g/mL ± 0.002 g/mL @ 22.8°C

Uncertified Values:

Trace Metal Impurity Scan: The data reported are based upon a scan of this specific lot at 1000 µg/mL via ICP analysis. The values are reported in µg/L.

Ag	<	10	Cu	<	0.2	Li	<	0.02	Rb	<	0.02	Th	<	0.02
Al	<	1	Dy	<	0.02	Lu	<	0.02	Re	<	0.02	Ti	<	0.02
As	<	0.05	Er	<	0.02	Mg	<	0.5	Rh	<	0.02	Tl	<	0.02
Au	<	0.02	Eu	<	0.02	Mn	<	0.1	Ru	<	0.02	Tm	<	0.02
B	<	1	Fe	<	1	Mo	<	0.1	Sb	<	0.02	U	<	0.1
Ba	<	0.02	Ga	<	0.02	Na	<	3	Sc	<	0.02	V	<	0.05
Be	<	0.02	Gd	<	0.02	Nb	<	0.02	Se	<	0.1	W	<	0.02
Bi	<	0.02	Ge	<	0.02	Nd	<	0.02	Si	<	10	Y	<	0.02
Ca	<	5	Hf	<	0.02	Ni	<	2	Sm	<	0.02	Yb	<	0.02
Cd	<	0.02	Ho	<	0.02	Os	<	0.02	Sn	<	1	Zn	<	5
Ce	<	0.02	In	<	0.02	Pb	<	0.05	Sr	<	0.02	Zr	<	0.02
Co	<	0.05	Ir	<	0.02	Pd	<	0.02	Ta	<	0.02	Hg		M
Cr	<	0.1	K	<	1	Pr	<	0.02	Tb	<	0.02			
Cs		na	La	<	0.02	Pt	<	0.02	Te	<	0.1	na - not analyzed		

Preparation Information:

The standard solution is prepared using high purity materials and assayed by analytical methods for conformity prior to use. This standard was prepared using the methods developed at NIST for SRM Spectrometric Standard Solutions under appropriate laboratory conditions.

Sub-boiling distilled high-purity acid has been used to place the materials in solution and to stabilize the standard. The matrix is as noted above in 18 megaohm deionized water.

Stability of this product is based upon rigorous short term and long term testing of the solution for the certified value. This testing includes, but is not limited to, the effect of temperature and packaging on the product.

Intended Use:

Lot No.: **1216607**
Rev. No.: 5.1.0
Page 1 of 2

High-Purity Standards is certified to ISO 9001:2008 and accredited to ISO/IEC 17025:2005 and ISO Guide 34:2009.

© Mostardi Platt

This Certified Reference Material (CRM) is intended for use as a calibration standard for the quantitative determination of mercury, calibration of instruments such as ICPOES, ICPMS, AAS and XRF, and validation of analytical methods. It also can be used in EPA, ASTM and other methods.

Traceability Information:

The traceability of this standard is maintained through an unbroken chain of comparisons to appropriate standards with suitable procedure and measurement uncertainties. The maintenance of the base and derived units of International System of Units (SI) with traceability of measurement results (contemporary metrology) to SI ensures their comparability over time as follows.

a. **Standard Weight and Analytical Balance**
The standard weights (NBS weights Inventory No 20231A) are calibrated every two years by South Carolina Metrology Laboratory that is a participant in "NIST Weights and Measures Measurement Assurance Program" with a certificate of measurement traceability to NIST primary standards.
The balances are calibrated yearly by the ISO 17025 accredited metrology service, and are verified weekly by an in-house method using standard weights.

b. **Volumetric Device**
The calibration of volumetric vessels is checked annually using the NBS 602 method.

c. **Thermometer**
The standard thermometers are calibrated every year by the ISO 17025 accredited metrology service. The thermometers used in-house are verified against the standard thermometers yearly.

d. **Calibration Standards:**
The Calibration Standard is directly traceable to SRM 3100 Series Spectrometric Standard Solutions.

Packaging and Storage Conditions:

The standard is packaged in a pre-cleaned polyethylene bottle. To maintain the integrity of this product, the solution should be kept tightly capped and stored under normal laboratory conditions.

Refer to Material Safety Datasheet (MSDS) for hazardous information.

Expiration Information:

The expiry date is guaranteed to be valid for eighteen months from the shipping date provided. For this reason, standards from the same lot may have different expiration dates.

Preparation Date:	**June 14, 2012**
Shipped Date:	**Aug 14, 2012**
Expiration Date:	**Feb 14, 2014**
Certificate Issue Date:	**July 6, 2012**

Quality Information:

ISO/IEC 17025:2005 Accreditation
Certificate Number AT-1529

Vanny T. Yib,
Inorganic Laboratory Manager

ISO Guide 34:2009 (RMP) Accreditation
Certificate Number AR-1436

Angel Sellers
Quality Manager

NOTICE: HPS products are intended for laboratory use only. All products should be handled and used by trained professional personnel. The responsibility for the safe handling and use of these products rests solely with the buyer and/or user. The data and information as stated was furnished by the manufacturer of the product. The information provided in this certificate pertains only to the lot number specified. None of the information provided in this certificate may be used, reproduced or transmitted in any form or by any means without written approval from High Purity Standards.

High-Purity Standards is certified to ISO 9001:2008 and accredited to ISO/IEC 17025:2005 and ISO Guide 34:2009.

© Mostardi Platt

RICCA CHEMICAL COMPANY

Arlington, TX 76012
Pocomoke City, MD 21851
Batesville, IN 47006
http://www.riccachemical.com
1-888-GO-RICCA
customerservice@riccachemical.com

Certificate of Analysis

Mercury ICP Standard, 1 mL = 1 mg Hg (1,000 ppm Hg)
Hg in 3% HNO3
Lot Number: 4207382 Product Number: PHG1KN Expiration Date: JAN 2014 Manufacture Date:7/13/2012

The certified value for this product is confirmed in independent testing by a second qualified chemist. The uncertainty associated with the certified value is ± 0.5% relative, which is the sum of the estimated errors due to the purity of the raw material, the volumetric preparation of the solution, and transpiration of the solution through the container wall.
The final solution concentration is confirmed by AA, ICP, or ICP-MS, and is traceable to NIST Standard Reference Material 3133. All trace level elements were determined by ICP or ICP-MS.
This product number replaces 4801 as of 2007.

Contains:

Name	CAS#	Grade
Mercury, Hg	7439-97-6	High Purity
Nitric Acid, HNO3	7697-37-2	Trace Metals
Water, Deionized, H2O	7732-18-5	ACS, ASTM D 1193 (Type I), EP, USP

Test Name	Assay Method	Specification	Result
Appearance	Clarity, Color, Odor	Clear, colorless, odorless	Passed Test
Assay at 20 °C (traceable to NIST SRM 999)	Titrimetric vs. Potassium Thiocyanate (Volhard's Indicator)	1000 ± 5 ppm Hg	997 ppm Hg

I=Spectral Interference N=Not Tested

Trace Elements by ICP or ICP - MS

All values reported in mg/L (ppm)

Aluminum (Al)	0.0553	Gallium (Ga)	< 0.0006	Osmium (Os)	< 0.003	Tantalum (Ta)	0.00312
Antimony (Sb)	N	Germanium (Ge)	< 0.0003	Palladium (Pd)	0.2069	Tellurium (Te)	0.018
Arsenic (As)	0.00114	Gold (Au)	N	Phosphorus (P)	0.04	Terbium (Tb)	< 0.00003
Barium (Ba)	0.0105	Hafnium (Hf)	< 0.001	Platinum (Pt)	0.00103	Thallium (Tl)	0.00456
Beryllium (Be)	< 0.0001	Holmium (Ho)	< 0.0001	Potassium (K)	0.18032	Thorium (Th)	< 0.0002
Bismuth (Bi)	0.00444	Indium (In)	0.07023	Praseodymium (Pr)	0.00003	Thulium (Tm)	0.00003
Boron (B)	< 0.00005	Iridium (Ir)	0.00029	Rhenium (Re)	0.00003	Tin (Sn)	0.0004
Cadmium (Cd)	< 0.00007	Iron (Fe)	0.101	Rhodium (Rh)	0.00017	Titanium (Ti)	< 0.001
Calcium (Ca)	I	Lanthanum (La)	< 0.00004	Rubidium (Rb)	< 0.00004	Tungsten (W)	N
Cerium (Ce)	< 0.00003	Lead (Pb)	< 0.00003	Ruthenium (Ru)	0.00014	Uranium (U)	< 0.00007
Cesium (Cs)	0.01991	Lithium (Li)	< 0.0293606E	Samarium (Sm)	< 0.002	Vanadium (V)	< 0.00004
Chromium (Cr)	< 0.00006	Lutetium (Lu)	< 0.0003	Scandium (Sc)	< 0.00008	Ytterbium (Yb)	< 0.001
Cobalt (Co)	< 0.00002	Magnesium (Mg)	0.0210	Selenium (Se)	< 0.004	Yttrium (Y)	< 0.00009
Copper (Cu)	0.00020	Manganese (Mn)	0.00058	Silicon (Si)	< 0.007	Zinc (Zn)	0.0052
Dysprosium (Dy)	< 0.0001	Molybdenum (Mo)	0.0151	Silver (Ag)	I	Zirconium (Zr)	< 0.002
Erbium (Er)	< 0.00007	Neodymium (Nd)	< 0.0002	Sodium (Na)	0.39		
Europium (Eu)	< 0.00008	Nickel (Ni)	< 0.0001	Strontium (Sr)	0.00036		
Gadolinium (Gd)	< 0.0002	Niobium (Nb)	0.00408	Sulfur (S)	N		

Specification	Reference	Method Number
Mercury ICP Standard, 1 mL = 1 mg Hg (1,000 ppm Hg) Hg in 3% HNO3	EPA	200.7

Volumetric glassware complies with Class A tolerance requirements of ASTM E 288 and NIST Circular 434; it is calibrated before first use and recalibrated regularly in accordance with ASTM E 542 and NIST Procedure NBSIR 74-461. Balances are calibrated regularly with weights certified traceable to the NIST national mass standard. Thermometers and temperature probes are calibrated before first use and recalibrated regularly with a thermometer traceable to NIST standards. All products are prepared according to master documents that assure manufacture according to validated methods. Batch records document raw material traceability and production and testing history for each lot manufactured.

Shelf Life (unopened container):

Version: 5

© Mostardi Platt

Ohio Lumex - Analytical Bias Test
14-Feb-08

Minimum Mass Sample Determination					
Test Run	Test Time	Fraction	Actual Concentration, ng	Expected Spike Concentration, ng	Recovery %
1	15:31	Hg^0	28	30	93.33
2	16:03	Hg^0	28	30	93.33
3	16:46	Hg^0	27	30	90.00
1	15:54	$HgCl_2$	31	30	103.33
2	16:13	$HgCl_2$	29	30	96.67
3	16:38	$HgCl_2$	28	30	93.33

Maximum Mass Sample Determination					
Test Run	Test Time	Fraction	Actual Concentration, ng	Expected Spike Concentration, ng	Recovery %
1	18:49	Hg^0	1950	1900	102.63
2	18:57	Hg^0	1890	1900	99.47
3	19:11	Hg^0	1780	1900	93.68
1	18:41	$HgCl_2$	1910	1900	100.53
2	18:51	$HgCl_2$	1810	1900	95.26
3	19:00	$HgCl_2$	1860	1900	97.89

© Mostardi Platt

END OF THE REPORT

© Mostardi Platt