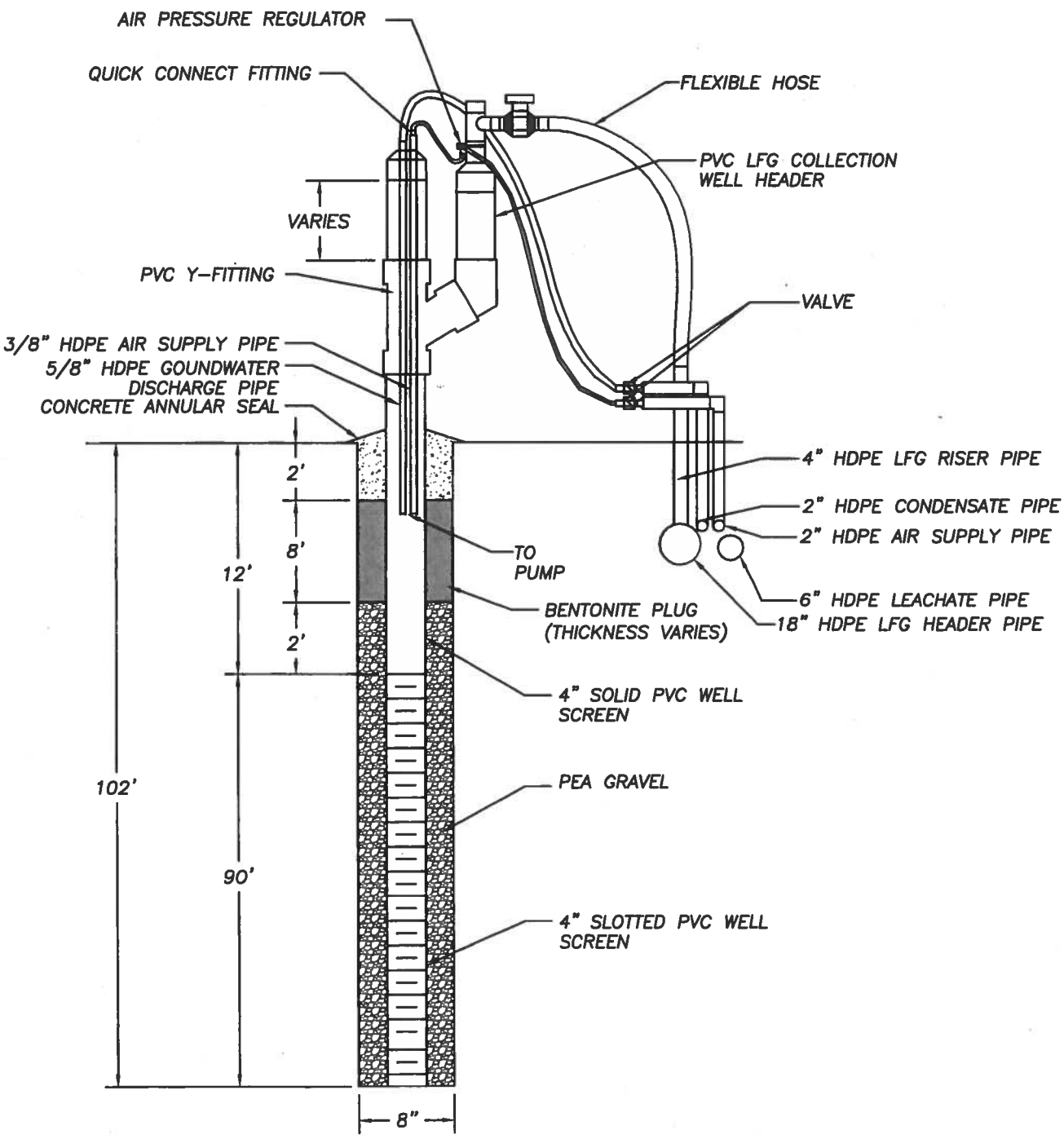

AQUATERRA
ENVIRONMENTAL SOLUTIONS, INC.
141 Market Place Drive
Fairview Hieghts, Illinois 62208

WELL DETAIL
PGW-58
BRIDGETON LANDFILL, LLC
BRIDGETON, MISSOURI

Project Mgr. TKJ	Drawn By RLH	Designed By RLH	Project No. 3038.10
Scale No Scale	Date 10/24/08	File Name 3038.10 PGW-58 Detail.dwg	Drawing No. 1

K:\Allied Waste\Bridgeton\3038.10 - 2008 PGW Installation\PGW Details\3038.10 PGW-58 Detail.dwg January 23, 2009 3:11:50 pm (rho)

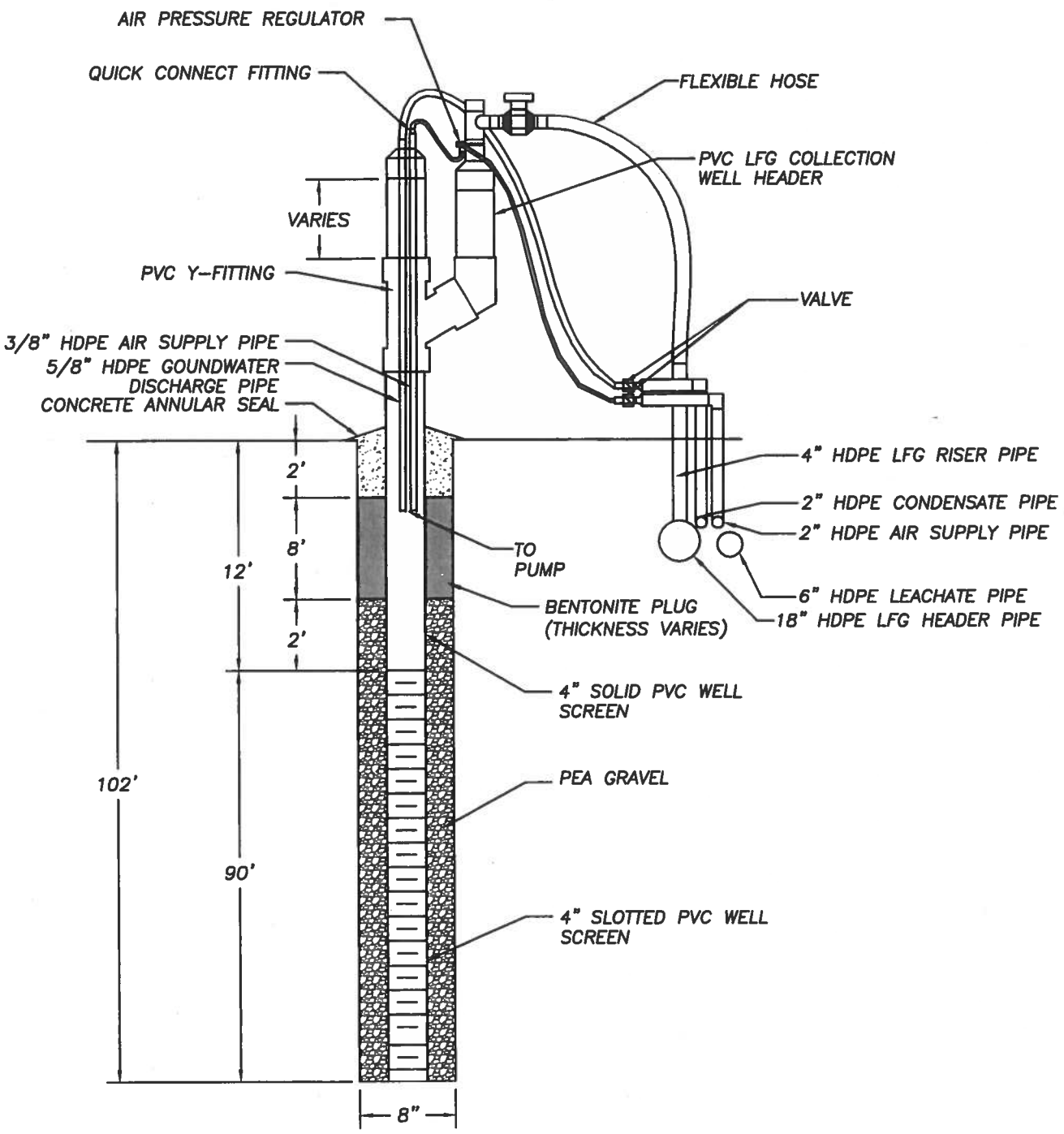

AQUATERRA
ENVIRONMENTAL SOLUTIONS, INC.
141 Market Place Drive
Fairview Hieghts, Illinois 62208

WELL DETAIL
PGW-59
BRIDGETON LANDFILL, LLC
BRIDGETON, MISSOURI

Project Mgr. TKJ	Drawn By RLH	Designed By RLH	Project No. 3038.10
Scale No Scale	Date 10/24/08	File Name 3038.10 PGW-59 Detail.dwg	Drawing No. 1

K:\Allied Waste\Bridgeton\3038.10 - 2008 PGW Installation\PGW Details\3038.10 PGW-59 Detail.dwg January 23, 2009 3:10:02 pm (rhs)

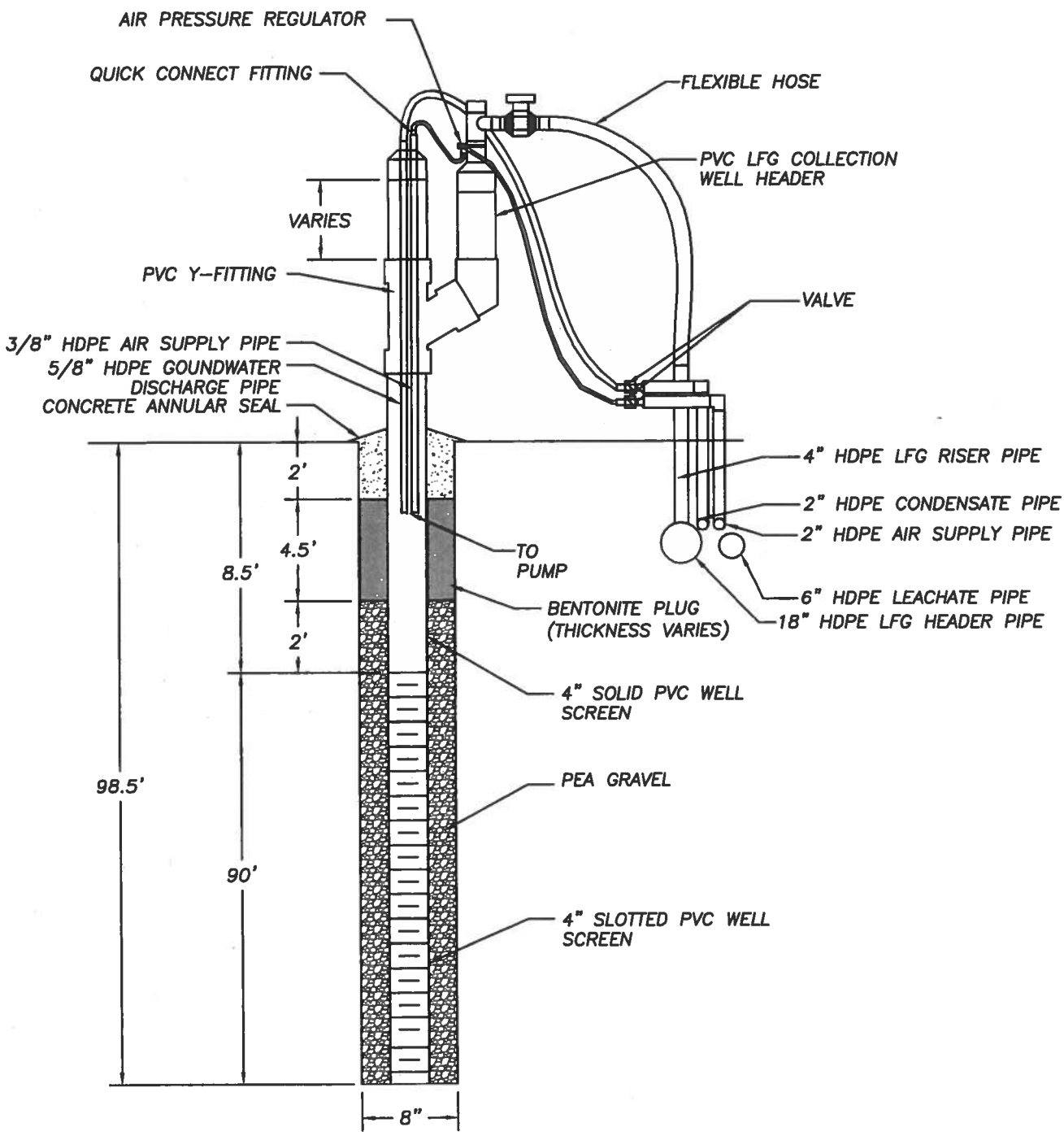

AQUATERRA
ENVIRONMENTAL SOLUTIONS, INC.
141 Market Place Drive
Fairview Hieghts, Illinois 62208

WELL DETAIL
PGW-60
BRIDGETON LANDFILL, LLC
BRIDGETON, MISSOURI

Project Mgr. TKJ	Drawn By RLH	Designed By RLH	Project No. 3038.10
Scale No Scale	Date 10/24/08	File Name 3038.10 PGW-60 Detail.dwg	Drawing No. 1

K:\Allied Waste\Bridgeton\3038.10 - 2008 PGW Installation\PGW Details\3038.10 PGW-60 Detail.dwg January 23, 2009 3:08:54 pm (rho)

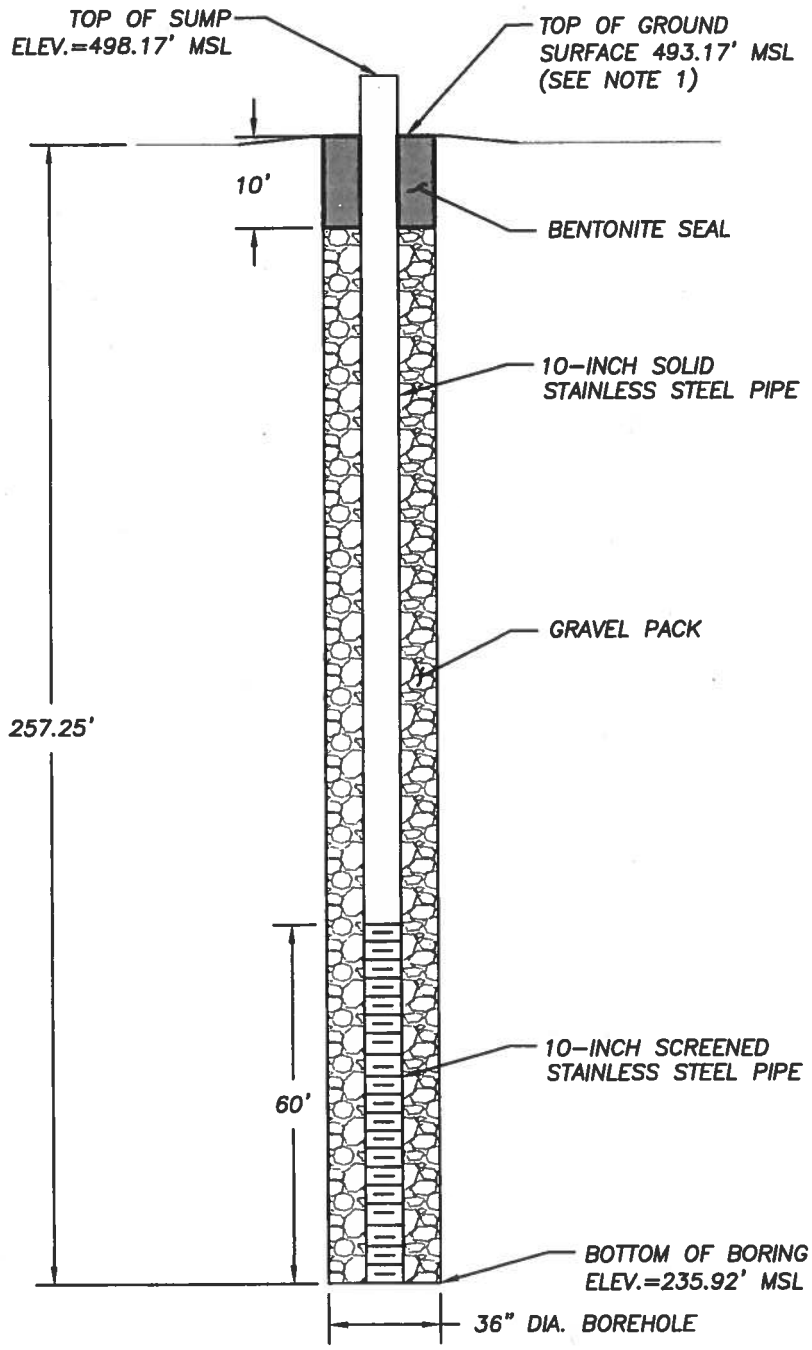

NOTES:

1. SURVEY DATA BASED ON BASED ON A SITE SURVEY PERFORMED ON DECEMBER 22, 2008 BY SHERBUT-CARSON & ASSOCIATES, P.C.

AQUATERRA
ENVIRONMENTAL SOLUTIONS, INC.
141 Market Place Drive
Fairview Heights, Illinois 62208

AS-BUILT DETAIL
LCS-2D INSTALLATION CQA REPORT
BRIDGETON LANDFILL, LLC
BRIDGETON, MISSOURI

Project Mgr. TKJ	Drawn By RLH	Designed By RLH	Project No. 3131.10
NOT TO SCALE	Date 12/19/08	File Name LCS-1C DETAIL.dwg	Figure No. 1

FIELD BORING LOG

Layne-Western Company
A Layne Company
2399 Cassens Drive • Fenton, Missouri 63026

52 Boring No. #1

Project Bridgeton L.F. Job No. 87 8445 Date 8-7-08

Location Bridgeton MO. Crew Bill Pinson Jeff Litch

Drilling Method: ☐ HSA ☐ CFA ☒ Rotary Wash ☐ Rock Coring ☐ Drilling Fluid 8¼ Augers 8" hammer & Bit

DEPTH, ft. From	DEPTH, ft. To	DESCRIPTION	Sample Type	Sample Depth, ft.	Sample Recovery	SPT Blows N/6"
0	32'	overburden Red green clay				
32	60'	weathered gray limestoin				
60	62'	Broken green Shale				
62	70'	Back to Stone limestone				
70	90'	gray limestone				
90	102'	SOFT limestone Sandstone MIX				
	102	Bottom From elevation				
		SET 90' SCH 80 4" Screen				
		SET 15' SCH 80 4" Riser 3' exposed				
		gravel to 10'				
		& chip to 3'				
		1 Bottom Cap				
		1 top cap				

WATER LEVEL OBSERVATIONS	NOTES
During Drilling _____ ft.	
At Completion _____ ft.	
After _____ hrs. _____ ft.	
After _____ hrs. _____ ft.	
After _____ hrs. _____ ft.	

Piezometer Installed: ☐ No ☐ Yes - Depth _____ ft.

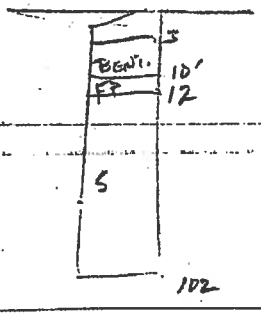

FIELD BORING LOG

Layne-Western Company
A Layne Company
2399 Cassens Drive • Fenton, Missouri 63026

PGW-51
Boring No. 2

Project Bridgeton L.F. Job No. 87 8445 Date 8 (8-11) 08

Location Bridgeton MO Crew Bill Pinson JEFF Fitch

Drilling Method: ☐ HSA ☐ CFA ☐ Rotary Wash ☐ Rock Coring ☐ Drilling Fluid

DEPTH, ft. From	DEPTH, ft. To	DESCRIPTION	Sample Type	Sample Depth, ft.	Sample Recovery	SPT Blows N/6"
0	28'	Clays & sands overburden				
28'		Bed Rock				
28	58'	Fractured gray limestone				
58	61'	Shale layerings				
61'	70'	Fractured limestone				
70	102'	Fractured gray limestone Bottom of Drill Fast				
	1	4" SCH Bottom cap				
	9	4" SCH 10' Screen				
	1	4" SCH 10' Riser				
	1	4" SCH 5' Riser				
	1	4" SCH top cap				
	1½	Buckets gravel				
	5	Bags Bentonite chips				

WATER LEVEL OBSERVATIONS	NOTES
During Drilling ____ ft.	well Bottom 102'
At Completion ____ ft.	
After ____ hrs. ____ ft.	
After ____ hrs. ____ ft.	
After ____ hrs. ____ ft.	

Piezometer Installed: ☐ No ☐ Yes - Depth ____ ft.

LW-794 3/90

FIELD BORING LOG

Layne-Western Company
A Layne Company
2399 Cassens Drive • Fenton, Missouri 63026

PGW-50
Boring No. 3

Project Bridgeton LandFill Job No. 87 8445 Date 8/11-12/08

Location Bridgeton MO Crew Bill Pinson Jeff Litch

Drilling Method: ☐ HSA ☐ CFA ☒ Rotary Wash ☐ Rock Coring ☐ Drilling Fluid 8¼" Mobil Augers 8" hammer bit

DEPTH, ft. From	DEPTH, ft. To	DESCRIPTION	Sample Type	Sample Depth, ft.	Sample Recovery	SPT Blows N/6"
0	20'	Red clay				
20	31'	Brown sand				
31'		Bed Rock				
31	47'	Fractured gray limestone				
47	50'	Small Shale Fracturing				
50	60'	Fractured gray limestone				
60	62'	Shale layer				
62	95'	Fractured gray limestone				
95	102'	Much of the same maybe with sand layering				
	1	4" SCH 80 Bottom Cap				
	9	4" SCH 80 10' screen				
	1	4" SCH 80 10' Riser				
	1	4" SCH 80 5' Riser				
	1	4" SCH 80 Top cap				
	1½	Buckets gravel				
	5	Bags Bitonite chips				

WATER LEVEL OBSERVATIONS	NOTES
During Drilling _____ ft.	Well Bottom 102'
At Completion _____ ft.	
After _____ hrs. _____ ft.	
After _____ hrs. _____ ft.	
After _____ hrs. _____ ft.	

Piezometer Installed: ☐ No ☐ Yes - Depth _____ ft.

LW-794 3/90

FIELD BORING LOG

Layne-Western Company
A Layne Company
2399 Cassens Drive • Fenton, Missouri 63026

PGW-49
Boring No. 4

Project Bridgeton L F. Job No. 87 8445 Date 8 (10-13) 08

Location Bridgeton MO Crew Bill Pinson Jeff Fitch

Drilling Method: ☐ HSA ☐ CFA ☑ Rotary Wash ☐ Rock Coring ☐ Drilling Fluid 8¼ mobil Augers 8" Drum-Bit

DEPTH, ft. From	DEPTH, ft. To	DESCRIPTION	Sample Type	Sample Depth, ft.	Sample Recovery	SPT Blows N/6"
0	24'	Red clay Sand mix				
24	28'	Brown sand				
28'		Bed Rock				
28	50'	Fractured limestone gray				
50	60'	Brown limestone Maple sand mix				
60	70'	Brown limestone Drill very Fast				
70	100'	gray Fractured limestone				
	1	4" SCH 80 Bottom cap				
	9	4" SCH 80 10' screen				
	1	4" SCH 80 10' Riser				
	1	4" SCH 80 5' Riser				
	1	4" SCH 80 top cap				
	1½	Buckets gravel				
	5	Bags Bitonite chips				

WATER LEVEL OBSERVATIONS	NOTES
During Drilling _____ ft.	Well Bottom 100'
At Completion _____ ft.	
After _____ hrs. _____ ft.	
After _____ hrs. _____ ft.	
After _____ hrs. _____ ft.	

Piezometer Installed: ☐ No ☐ Yes - Depth _____ ft.

LW-794 3/90

FIELD BORING LOG

Layne-Western Company
A Layne Company
2399 Cassens Drive • Fenton, Missouri 63026

PGW-48
Boring No. 5

Project Bridgeton L.F. Job No. 87 8145 Date 8-13-08

Location Bridgeton MO Crew Bill Pinson Jeff Litch

Drilling Method: ☐ HSA ☐ CFA ☐ Rotary Wash ☐ Rock Coring ☐ Drilling Fluid 8 1/4 mobil Ag 8" hammer Bit

DEPTH, ft. From	DEPTH, ft. To	DESCRIPTION	Sample Type	Sample Depth, ft.	Sample Recovery	SPT Blows N/6"
0	04'	Red clay sand mix				
04	08'	Brown sand				
	08'	Rock				
08	50'	Fractured gray limestone.				
50	50'	Shale more than previous holes				
50	100'	gray limestone limited fracturing				
	1	4" SCH 80 Bottom Cap				
	9	4" SCH 80 10' screens				
	1	4" SCH 80 10' Riser				
	1	4" SCH 80 5' Riser				
	1	4" SCH 80 top cap				
	1 1/2	Buckets gravel				
	5	Bags Bitonite chips				

WATER LEVEL OBSERVATIONS	NOTES
During Drilling ____ ft.	Well Bottom 100'
At Completion ____ ft.	
After ____ hrs. ____ ft.	
After ____ hrs. ____ ft.	
After ____ hrs. ____ ft.	

Piezometer Installed: ☐ No ☐ Yes - Depth ____ ft.

LW-794 3/90

FIELD BORING LOG

PGW-47
Boring No. 6

Layne-Western Company
A Layne Company
2399 Cassens Drive • Fenton, Missouri 63026

Project Bridgeton LF Job No. 878445 Date 8-14-08

Location Bridgeton MO Crew Bill Pilson Jeff Litch

Drilling Method: ☐ HSA ☐ CFA ☒ Rotary Wash ☐ Rock Coring ☐ Drilling Fluid 8 1/4 Mobil Augers 8" hammer Bit

DEPTH, ft. From	DEPTH, ft. To	DESCRIPTION	Sample Type	Sample Depth, ft.	Sample Recovery	SPT Blows N/6"
0	24'	Red clay sand mix				
24	28'	Brown sand				
	28'	Bedrock				
28	47'	Broken limestone Fracturing				
47	50'	Small shale seam				
50	102'	gray limestone some Fracturing				
	1	4" SCH 80 Bottom cap				
	9	4" SCH 80 10' Screen				
	1	4" SCH 80 10' Riser				
	1	4" SCH 80 5' Riser				
	1	4" SCH 80 Top cap				
	1 1/2	Bucket gravel				
	5	Bags Bitonite chips				

WATER LEVEL OBSERVATIONS	NOTES
During Drilling _____ ft.	well Bottom 102'
At Completion _____ ft.	
After _____ hrs. _____ ft.	
After _____ hrs. _____ ft.	
After _____ hrs. _____ ft.	

Piezometer Installed: ☐ No ☐ Yes - Depth _____ ft.

LW-794 3/90

FIELD BORING LOG

Layne-Western Company
A Layne Company
2399 Cassens Drive • Fenton, Missouri 63026

PGW-46
Boring No. 7

Project Bridgeton L.F. Job No. 87 8445 Date 8-14-08

Location Bridgeton MO Crew Bill Pinson Jeff Hitch

Drilling Method: ☐ HSA ☐ CFA ☒ Rotary Wash ☐ Rock Coring ☐ Drilling Fluid 8 1/4 mobil Augers 8" mud Bi

DEPTH, ft. From	DEPTH, ft. To	DESCRIPTION	Sample Type	Sample Depth, ft.	Sample Recovery	SPT Blows N/6"
0	20'	Red clay				
20	25'	wet Red clay mix with sand				
25'	33'	Brown sand				
33	32'	Rock maybe Fill				
32	35'	silt & 2" to 3" Broken up Rock				
35'	50'	Fractured gray limestone				
50	51'	Shale layering				
51	100'	limestone Bottom				
	1	4" SCH 80 Bottom Cap				
	9	4" SCH 80 10' screen				
	1	4" SCH 80 10' Riser				
	1	4" SCH 80 5' Riser				
	1	4" SCH 80 top cap				
	1 1/2	Buckets gravel				
	5	Bags Bentonite chips				

WATER LEVEL OBSERVATIONS	NOTES
During Drilling ____ ft.	well Bottom at 100'
At Completion ____ ft.	
After ____ hrs. ____ ft.	
After ____ hrs. ____ ft.	
After ____ hrs. ____ ft.	

Piezometer Installed: ☐ No ☐ Yes - Depth ____ ft.

LW-794 3/90

FIELD BORING LOG

Layne-Western Company
A Layne Company
2399 Cassens Drive • Fenton, Missouri 63026

Boring No. 8

Project Bridgeton L-E Job No. 87 8145 Date 8-15-08

Location Bridgeton MO Crew Bill Pilson Jeff Hitch

Drilling Method: ☐ HSA ☐ CFA ☒ Rotary Wash ☐ Rock Coring ☐ Drilling Fluid 8¼ Augers 8" Hammer Bit

DEPTH, ft. From	DEPTH, ft. To	DESCRIPTION	Sample Type	Sample Depth, ft.	Sample Recovery	SPT Blows N/6"
0	24'	Brown Clay Sand Mix				
24	30'	Brown Sand Dry				
30	33'	Brown Clay Sand Mix wet				
33		Bedrock				
33	47'	Blue Gray Clay Compacted & Stable				
47	60'	Gray limestone some Fracturing				
60	102'	Gray limestone				
	1	4" SCH 80 Bottom Cap				
	9	4" SCH 80 10' Screens				
	1	4" SCH 80 10' Risers				
	1	4" SCH 80 5' Risers				
	1	4" SCH 80 top Cap				
	1½	Buckets Gravel				
	5	Bags Bentonite chips				

WATER LEVEL OBSERVATIONS	NOTES
During Drilling _____ ft.	Well Bottom 102'
At Completion _____ ft.	
After _____ hrs. _____ ft.	
After _____ hrs. _____ ft.	
After _____ hrs. _____ ft.	

Piezometer Installed: ☐ No ☐ Yes - Depth _____ ft.

LW-794 8/90

FIELD BORING LOG

Layne-Western Company
A Layne Company
2399 Cassens Drive • Fenton, Missouri 63026

44 Boring No. 9

Project Bridgeton landfill Job No. 87 8447 Date 8-18-08

Location Bridgeton MO Crew Bill Pinson Jeff Hitch

Drilling Method: ☐ HSA ☐ CFA ☒ Rotary Wash ☐ Rock Coring ☐ Drilling Fluid 8¼ Augers 8" hammer + B

DEPTH, ft. From	DEPTH, ft. To	DESCRIPTION	Sample Type	Sample Depth, ft.	Sample Recovery	SPT Blows N/6"
0	5'	Brown Sandy Dirt				
5	20'	Brown Sandy Clay				
20	34'	Dark Green Gray Clay				
34	50'	yellow light Brown weather limestone				
50	60'	Fractured gray limestone + shale				
60	100'	Gray Fractured limestone				
		34' Bedrock				
	1	4" SCH 80 Bottom Cap				
	9	4" SCH 80 10' Screens				
	1	4" SCH 80 10' Riser				
	1	4" SCH 80 5' Riser				
	1	4" SCH 80 top cap				
	1½	Buckets Gravel				
	5	Bags Bentonite chips				

WATER LEVEL OBSERVATIONS	NOTES
During Drilling ____ ft.	Bottom well 100'
At Completion ____ ft.	
After ____ hrs. ____ ft.	
After ____ hrs. ____ ft.	
After ____ hrs. ____ ft.	

Piezometer Installed: ☐ No ☐ Yes - Depth ____ ft.

LW-794 3/90

✓

FIELD BORING LOG

Layne-Western Company
A Layne Company
2399 Cassens Drive • Fenton, Missouri 63026

43
Boring No. 10

Project Bridgeton Landfill Job No. 878447 Date 8-18-08

Location Bridgeton mo Crew Bill Pilsen Jeff Litch

Drilling Method: ☐ HSA ☐ CFA ☒ Rotary Wash ☐ Rock Coring ☐ Drilling Fluid 8¼ Augers 8" hammer tf

DEPTH, ft. From	DEPTH, ft. To	DESCRIPTION	Sample Type	Sample Depth, ft.	Sample Recovery	SPT Blows N/6"
0	5'	Brown Sandy Dirt				
5	20'	Brown Sandy Clay				
20	25'	Sandy wet red Clay				
25	34'	Dark Green or Gray Clay				
34	60'	yellow light Brown weathered limestone				
60	100	Fractured Gray limestone				
		34' Bed Rock				
	1	4" SCH 80 Bottom Cap				
	9	4" SCH 80 10' screens				
	1	4" SCH 80 10' Riser				
	1	4" SCH 80 5' Riser				
	1	4" SCH 80 Top cap				
	1½	Buckets gravel				
	5	Bags Bentonite Chips				

WATER LEVEL OBSERVATIONS	NOTES
During Drilling _____ ft.	Plezometer Installed: ☐ No ☐ Yes - Depth _____ ft.
At Completion _____ ft.	Bottom well 100'
After _____ hrs. _____ ft.	
After _____ hrs. _____ ft.	
After _____ hrs. _____ ft.	

LW-794 3/90

FIELD BORING LOG

Layne-Western Company
A Layne Company
2399 Cassens Drive • Fenton, Missouri 63026

Boring No. 42 11

Project Bridgeton Land Fill Job No. 878415 Date 8-19-08

Location Bridgeton MO Crew Bill Pilson Jeff Hitch

Drilling Method: ☐ HSA ☐ CFA ☒ Rotary Wash ☐ Rock Coring ☐ Drilling Fluid 8 1/4" mobil Augers 8" mm

DEPTH, ft. From	DEPTH, ft. To	DESCRIPTION	Sample Type	Sample Depth, ft.	Sample Recovery	SPT Blows N/6"
0	10'	Dark Brown Sandy Dirt				
10	20'	Dark Green Sandy Clay				
20	36'	Dark Green Sand - some clay				
36	48'	Blue Shale set 8" hammer	call Bedrock		36'	
48	50'	Fractured limestone				
50	85'	Blue Shale				
85	100'	gray limestone 1. Some Fracturing				
	1	4" SCH 80 Bottom Cap				
	1	4" SCH 80 10' Riser				
	9	4" SCH 80 10' Screens				
	1	4" SCH 80 5' Riser				
	1	4" SCH 80 top Cap				
	1 1/2	Buckets gravel				
	5	Bags Bentonite chips				

WATER LEVEL OBSERVATIONS	NOTES
During Drilling _____ ft.	Well Bottom 100'
At Completion _____ ft.	
After _____ hrs. _____ ft.	
After _____ hrs. _____ ft.	
After _____ hrs. _____ ft.	

Piezometer Installed: ☐ No ☐ Yes - Depth _____ ft.

LW-794 3/90

FIELD BORING LOG

Layne-Western Company
A Layne Company
2399 Cassens Drive • Fenton, Missouri 63026

Boring No. 12

Project Bridgeton Landfill Job No. 8785415 Date 8-19-08

Location Bridgeton MO Crew Bill Pinson

Drilling Method: ☐ HSA ☐ CFA ☐ Rotary Wash ☐ Rock Coring ☐ Drilling Fluid 8¼ Mobil Augers 8" hammer + Bit

DEPTH, ft. From	DEPTH, ft. To	DESCRIPTION	Sample Type	Sample Depth, ft.	Sample Recovery	SPT Blows N/6"
0	12'	Overburden Brown Sandy Dirt				
12	30'	Dark Brown Clay				
30	49'	Brown wet Clay				
	49'	Rock set 8" hammer + Bit				
45	65'	Broken Gray limestone				
65	70'	Shale Blue				
70	100'	limestone no Fracturing				
	1	4" SCH 80 Bottom Cap				
	9	4" SCH 80 10' screens				
	1	4" SCH 80 5' Riser				
	1	4" SCH 80 10' Riser				
	1	4" SCH 80 top cap				
	1½	Buckets Gravel				
	5	Bags Bentonite chips				

WATER LEVEL OBSERVATIONS	NOTES
During Drilling _____ ft.	Piezometer Installed: ☐ No ☐ Yes - Depth _____ ft.
At Completion _____ ft.	Well Bottom 100'
After _____ hrs. _____ ft.	
After _____ hrs. _____ ft.	
After _____ hrs. _____ ft.	

LW-794 3/90

FIELD BORING LOG

Layne-Western Company
A Layne Company
2399 Cassens Drive • Fenton, Missouri 63026

40
Boring No. 13
PGW-53

Project Bridgeton LandFill Job No. 87 8445 Date 8-20-08

Location Bridgeton MO Crew Bill Pinson Jeff Lith

Drilling Method: ☐ HSA ☐ CFA ☒ Rotary Wash ☐ Rock Coring ☐ Drilling Fluid 8¼ mobil Agers 8" hom + Bit

DEPTH, ft. From	DEPTH, ft. To	DESCRIPTION	Sample Type	Sample Depth, ft.	Sample Recovery	SPT Blows N/6"
0	20'	overburden light Brown clays				
20	30'	Dark green wet clay some trash	Strong odor			
	30'	Bedrock				
30	60'	weathered green limestone				
60	60'	Shale				
60	70'	Broken limestone				
70	90'	light gray limestone				
90	100'	Soft limestone Bottom				
	1	4" SCH 80 Bottom Cap				
	9	4" SCH 80 10' screens				
	1	4" SCH 80 10' Riser				
	1	4" SCH 80 5' Riser				
	1	4" SCH 80 Top Cap				
	1½	Buckets gravel				
	5	Bags Bentonite chips				

WATER LEVEL OBSERVATIONS	NOTES
During Drilling ____ ft.	Well Bottom 100'
At Completion ____ ft.	
After ____ hrs. ____ ft.	
After ____ hrs. ____ ft.	
After ____ hrs. ____ ft.	

Piezometer Installed: ☐ No ☐ Yes - Depth ____ ft.

LW-794 3/90

FIELD BORING LOG

Layne-Western Company
A Layne Company
2399 Cassens Drive • Fenton, Missouri 63026

38
Boring No. 15
PGW-55

Project Bridgeton Landfill Job No. 87 8145 Date 8-02-08

Location Bridgeton MO Crew Bill Pinson Jeff Hitch

Drilling Method: ☐ HSA ☐ CFA ☒ Rotary Wash ☐ Rock Coring ☐ Drilling Fluid 8¼" mobil Augers 8" hamstBIT

DEPTH, ft. From	DEPTH, ft. To	DESCRIPTION	Sample Type	Sample Depth, ft.	Sample Recovery	SPT Blows N/6"
0	10'	Brown clay Overburden.				
10	28'	Green clay heavy trash Deposits	Strong odes			
28'	60'	Gray limestone limited Fracturing				
60	102'	Gray limestone				
	1	4" SCH 80 Bottom cap				
	9	4" SCH 80 10' screens				
	1	4" SCH 80 10' Riser				
	1	4" SCH 80 5' Riser				
	1	4" SCH 80 Top cap				
	1½	Bucket gravel				
	5	Bags Bentonite Chips				

WATER LEVEL OBSERVATIONS	NOTES
During Drilling _____ ft.	Piezometer Installed: ☐ No ☐ Yes - Depth _____ ft.
At Completion _____ ft.	Bottom well 102'
After _____ hrs. _____ ft.	
After _____ hrs. _____ ft.	
After _____ hrs. _____ ft.	

LW-794 3/90

FIELD BORING LOG

Layne-Western Company
A Layne Company
2399 Cassens Drive • Fenton, Missouri 63026

Boring No. 34 # 16
PGW-56

st Bridgeton L.F. Job No. 87 8445 Date 8-25-08

tion Bridgeton MO Crew Bill Pinson Jeff Litch

ing Method: ☐ HSA ☐ CFA ☐ Rotary Wash ☐ Rock Coring ☐ Drilling Fluid 8¼ Mobil Augers 8" hammer Bit

DEPTH, ft. From	DEPTH, ft. To	DESCRIPTION	Sample Type	Sample Depth, ft.	Sample Recovery	SPT Blows N/6"
0	30'	overburden trash				
30	60'	weathered gray limestone				
60	63'	green shale				
33	70'	Broken Gray limestone Trash Smell				
70	90'	gray limestone stable trash Smell				
90	102'	very easy Drill limestone trash Smell				
	1	4" SCH 80 Bottom Cap				
	9	4" SCH 80 10' Screen				
	1	4" SCH 80 10' Riser				
	1	4" SCH 80 5' Riser				
	1	4" SCH 80 top cap				
	1½	Buckets gravel				
	8	Bags Bentonite chips				

WATER LEVEL OBSERVATIONS	NOTES
During Drilling _____ ft.	Well Bottom 102'
At Completion _____ ft.	
After _____ hrs. _____ ft.	
After _____ hrs. _____ ft.	
After _____ hrs. _____ ft.	

Piezometer Installed: ☐ No ☐ Yes - Depth _____ ft.

LW-794 3/90

FIELD BORING LOG

Layne-Western Company
A Layne Company
2399 Cassens Drive • Fenton, Missouri 63026

35 Boring No. #18
PGW-58

Project Bridgeton L.F. Job No. 87-8445 Date 9-2-08

Location Bridgeton MO Crew Bill Pinson Jeff Hitch

Drilling Method: ☐ HSA ☐ CFA ☐ Rotary Wash ☐ Rock Coring ☐ Drilling Fluid 8¼ modal Augers 8" hand 8" Bit

DEPTH, ft. From	DEPTH, ft. To	DESCRIPTION	Sample Type	Sample Depth, ft.	Sample Recovery	SPT Blows N/6"
0	33½'	trash Heavy odor				
33	61'	weathered gray limestone				
61	67'	in out shale to limestone trash smell				
67	80'	Broken gray limestone				
80	90'	limestone				
90	102'	Broken easily Drilled limestone				
	1	4" SCH 80 top cap				
	9	4" SCH 80 10' Screen				
	1	4" SCH 80 10' Riser				
	1	4" SCH 80 5' Riser				
	1	4" SCH 80 Bottom Cap				
	1½	Buckets gravel				
	9	Bags Bentonite chips				

WATER LEVEL OBSERVATIONS	NOTES
During Drilling _____ ft.	Bottom PVC 102'
At Completion _____ ft.	
After _____ hrs. _____ ft.	
After _____ hrs. _____ ft.	
After _____ hrs. _____ ft.	

Piezometer Installed: ☐ No ☐ Yes - Depth _____ ft.

LW-794 3/90

FIELD BORING LOG

Layne-Western Company
A Layne Company
2399 Cassens Drive • Fenton, Missouri 63026

34 Boring No. # 19
PGW-59

Project Bridgeton L.F. Job No. 87-8445 Date 8-29-08

Location Bridgeton MO Crew Bill Pinson Jeff Litch

Drilling Method: ☐ HSA ☐ CFA ☒ Rotary Wash ☐ Rock Coring ☐ Drilling Fluid 8¼" mod Augers 8" hammer 8" Bit

DEPTH, ft. From	DEPTH, ft. To	DESCRIPTION	Sample Type	Sample Depth, ft.	Sample Recovery	SPT Blows N/6"
0	31'	Trash				
31	60'	Broken limestone trash smell				
		very close to quarry wall trash smell				
60	70'	Broken gray limestone trash smell				
70	80'	Broken shale limestone mix trash smell				
80	90'	Broken limestone trash smell				
90	100	Broken limestone sandstone mix trash smell				
	1	4" SCH 80 Bottom Cap				
	9	4" SCH 80 10' Screen				
	1	4" SCH 80 10' Riser				
	1	4" SCH 80 5' Riser				
	1	4" SCH 80 Top Cap				
	1½	Buckets Gravel				
	9	Bags Bentonite chips				

WATER LEVEL OBSERVATIONS	NOTES
During Drilling _____ ft.	
At Completion _____ ft.	
After _____ hrs. _____ ft.	
After _____ hrs. _____ ft.	
After _____ hrs. _____ ft.	

Piezometer Installed: ☐ No ☐ Yes - Depth _____ ft.

LW-794 3/90

FIELD BORING LOG

Layne-Western Company
A Layne Company
2399 Cassens Drive • Fenton, Missouri 63026

33
Boring No. 20
PGW-6D

Project Bridgeton L.F. Job No. 87 8445 Date 8-26-08

Location Bridgeton MO Crew Bill Pinson Jeff Hitch

Drilling Method: ☐ HSA ☐ CFA ☒ Rotary Wash ☐ Rock Coring ☐ Drilling Fluid 8¼" mobil Augers 8" hom 8" bit

DEPTH, ft. From	DEPTH, ft. To	DESCRIPTION	Sample Type	Sample Depth, ft.	Sample Recovery	SPT Blows N/6"
0	102'	trash				
0	12'	NO Fluid				
12	102'	leach aid				
		well set at 98½'				
	1	4" SCH 80 Bottom Cap				
	9	4" SCH 80 10' Screen				
	1	4" SCH 80 10' Riser				
	1	4" SCH 80 5' Riser				
	1	4" SCH 80 top Cap				
	1½	Buckets Gravel				
	9	Bags Bentonite Chips				

WATER LEVEL OBSERVATIONS	NOTES
During Drilling _____ ft.	Piezometer Installed: ☐ No ☐ Yes - Depth _____ ft.
At Completion _____ ft.	well Bottom 98½'
After _____ hrs. _____ ft.	
After _____ hrs. _____ ft.	
After _____ hrs. _____ ft.	

LW-784 3/90