Missouri Department of Natural Resources

PUBLIC NOTICE

DRAFT MISSOURI STATE OPERATING PERMIT

**Public Notice period extended until 03/01/2015

DATE: January 2, 2015

In accordance with the state Clean Water Law, Chapter 644, RSMo, Missouri Clean Water Commission regulation 10 CSR 20-6.010, and the Federal Clean Water Act, the applicants listed herein have applied for authorization to either discharge to waters of the state, or to operate a no-discharge wastewater treatment facility. The proposed permits for these operations are consistent with applicable water quality standards, effluent standards and/or treatment requirements or suitable timetables to meet these requirements (see 10 CSR 20-7.015 and 7.031). All permits will be issued for a period of five years unless noted otherwise in the Public Notice for that discharge.

On the basis of preliminary staff review and the application of applicable standards and regulations, the Missouri Department of Natural Resources (MDNR), as administrative agent for the Missouri Clean Water Commission, proposes to issue a permit(s) subject to certain effluent limitations, schedules, and special conditions. The proposed determinations are tentative pending public comment.

Persons wishing to comment on the proposed permit conditions are invited to submit them in writing to: Missouri Department of Natural Resources, Water Protection Program,
P.O. Box 176, Jefferson City, Missouri 65102, ATTN: NPDES Permits and Engineering Section/Permit Comments. **Please include the permit number in all comment letters.**

Comments should be confined to the issues relating to the proposed action and permit(s) and the effect on water quality. The MDNR may not consider as relevant comments or objections to a permit based on issues outside the authority of the Missouri Clean Water Commission,
(see Curdt v. Mo. Clean Water Commission, 586 S.W.2d 58 Mo. App. 1979).

All comments must be received or postmarked by 5:00 p.m. on February 2, 2015. MDNR will consider all written comments, including e-mails, faxes and letters, in the formulation of all final determinations regarding the applications. E-mail comments will be accepted at the following address: publicnoticenpdes@dnr.mo.gov. If response to this notice indicates significant public interest, a public meeting or hearing may be held after due notice for the purpose of receiving public comment on the proposed permit or determination. Public hearings and/or issuance of the permit will be conducted or processed according to 10 CSR 20-6.020.

Copies of all draft permits and other information including copies of applicable regulations are available for inspection and copying at MDNR's Website: http://www.dnr.mo.gov/env/wpp/permits/permit-pn.htm, or at the Missouri Department of Natural Resources, Water Protection Program, P.O. Box 176, Jefferson City, Missouri 65102, between the hours of 8:00 a.m. and 5:00 p.m., Monday through Friday.

STATE OF MISSOURI

DEPARTMENT OF NATURAL RESOURCES

MISSOURI CLEAN WATER COMMISSION

MISSOURI STATE OPERATING PERMIT

In compliance with the Missouri Clean Water Law, (Chapter 644 R.S. Mo. as amended, hereinafter, the Law), and the Federal Water Pollution Control Act (Public Law 92-500, 92nd Congress) as amended,

Permit No.	MO-0004812
Owner:	Ameren
Address:	P.O. Box 66149, MC-602, St. Louis, MO 63166-6149
Continuing Authority:	Same as above
Address:	Same as above
Facility Name:	Ameren Missouri-Labadie Energy Center
Facility Address:	226 Labadie Power Plant Road, Labadie, MO 63055
Legal Description:	See Pages Two and Three (2-3)
UTM Coordinates:	See Pages Two and Three (2-3)
Receiving Stream:	See Pages Two and Three (2-3)
First Classified Stream and ID:	See Pages Two and Three (2-3)
USGS Basin & Sub-watershed No.:	10300200-0603

is authorized to discharge from the facility described herein, in accordance with the effluent limitations and monitoring requirements as set forth herein:

FACILITY DESCRIPTION

See Page 2 for facility description. Ameren Missouri - Labadie Energy Center is a steam electrical power generation plant primarily engaged in the generation of electricity for distribution and sale. The plant consists of four generating units with a net capability of 2,407 megawatts (MW). The typical annual generation capacity is between eighteen and nineteen million megawatt hours (18,000,000-19,000,000 MWHR). This facility has ten (10) permitted features.

This permit authorizes only wastewater discharges under the Missouri Clean Water Law and the National Pollutant Discharge Elimination System; it does not apply to other regulated areas. This permit may be appealed in accordance with Section 621.250 RSMo, Section 640.013 RSMo and Section 644.051.6 of the Law.

Effective Date	Sara Parker Pauley, Director, Department of Natural Resources
Expiration Date	John Madras, Director, Water Protection Program

DRAFT

FACILITY DESCRIPTION (continued)

Outfall #001 - Steam Electric Power Plant - SIC #4911
Non-contact cooling water. In winter time, water can be routed back to intake structure to act as a warming line to prevent icing over.
Legal Description: NW ¼, NE ¼, Sec.18, T44N, R02E, Franklin County
UTM Coordinates: x = 688556; y = 4270810
Receiving Stream: Missouri River (P)
First Classified Stream and ID: Missouri River (P) (1604) (303(d))
USGS Basin & Sub-watershed No.: (10300200-0603)
Design flow is 1,428 MGD. Actual flow is 941 MGD.

Outfall #002 - Steam Electric Power Plant - SIC #4911
Ash ponds, receiving flows from the bottom ash pond, fly ash pond, coal pile, coal pile runoff, sewage treatment plant. Treatment includes carbon dioxide (CO_2) injection for pH adjustment, settling, precipitation.
Legal Description: SE ¼, SW ¼, Sec. 18, T44N, R02E, Franklin County
UTM Coordinates: x = 688017; y = 426944
Receiving Stream: Missouri River (P)
First Classified Stream and ID: Missouri River (P) (1604) (303(d))
USGS Basin & Sub-watershed No.: (10300200-0603)
Design flow is 57.8 MGD. Actual flow is 15.8 MGD.

Outfall #02A – Steam Electric Power Plant - SIC #4911
Internal monitoring point, discharge is through Outfall 002.
Domestic Wastewater: Extended aeration/sludge holding tank/sludge removed by contract hauler.
Legal Description: SW ¼, NE ¼, Sec. 18, T44N, R02E, Franklin County
UTM Coordinates: x =688649; y = 4270339
Receiving Stream: Missouri River (P)
First Classified Stream and ID: Missouri River (P) (1604) (303(d))
USGS Basin & Sub-watershed No.: (10300200-0603)
Design flow is 0.05 MGD. Actual flow is 0.015 MGD.
Design sludge production is 0.85 dry tons per year; actual sludge production is 0.85 dry tons per year.

Outfall #003 - Steam Electric Power Plant - SIC #4911
Stormwater discharge. This outfall drains a total of 5 acres, with 3.8 acres impervious surface.
Legal Description: NW ¼, NE ¼, Sec. 18, T44N, R02E, Franklin County
UTM Coordinates: x = 688455; y = 4270696
Receiving Stream: Missouri River (P)
First Classified Stream and ID: Missouri River (P) (1604) (303(d))
USGS Basin & Sub-watershed No.: (10300200-0603)
Design flow is N/A. Actual flow is dependent upon rainfall.

Outfall #004 - Steam Electric Power Plant - SIC #4911
Stormwater discharge. This outfall drains 1.4 acres, all of which is impervious surface.
Legal Description: NE ¼, NW ¼, Sec. 18, T44N, R02E, Franklin County
UTM Coordinates: x = 688328; y = 4270632
Receiving Stream: Missouri River (P)
First Classified Stream and ID: Missouri River (P) (1604) (303(d))
USGS Basin & Sub-watershed No.: (10300200-0603)
Design flow is N/A. Actual flow is dependent upon rainfall.

Outfall #005 - Steam Electric Power Plant - SIC #4911
Stormwater discharge. This outfall drains 0.1 acres, with 0.05 acres impervious surface.
Legal Description: NE ¼, NW ¼, Sec. 18, T44N, R02E, Franklin County
UTM Coordinates: x = 688238; y = 4270565
Receiving Stream: Missouri River (P)
First Classified Stream and ID: Missouri River (P) (1604) (303(d))
USGS Basin & Sub-watershed No.: (10300200-0603)
Design flow is N/A. Actual flow is dependent upon rainfall.

DRAFT

FACILITY DESCRIPTION (continued)

Outfall #006 - Steam Electric Power Plant - SIC #4911
Stormwater discharge. This outfall drains 3.7 acres, with 1.8 acres impervious surface.
Legal Description: SE ¼, NW ¼, Sec. 18, T44N, R02E, Franklin County
UTM Coordinates: x = 688058; y = 4270382
Receiving Stream: Missouri River (P)
First Classified Stream and ID: Missouri River (P) (1604) (303(d))
USGS Basin & Sub-watershed No.: (10300200-0603)
Design flow is N/A. Actual flow is dependent upon rainfall.

Outfall #007 - Steam Electric Power Plant - SIC #4911
Stormwater discharge. This outfall drains 3.3 acres, with 1.7 acres impervious surface.
Legal Description: SW ¼, NE ¼, Sec. 19, T44N, R02E, Franklin County
UTM Coordinates: x = 688331; y = 4268849
Receiving Stream: Tributary to the Labadie Creek
First Classified Stream and ID: Labadie Creek (P) (1693)
USGS Basin & Sub-watershed No.: (10300200-0603)
Design flow is N/A. Actual flow is dependent upon rainfall.

Outfall #008 - Steam Electric Power Plant - SIC #4911
Stormwater discharge. This outfall drains 1.0 acres, with 0.5 acres impervious surface.
Legal Description: Landgrant 01921, Franklin County
UTM Coordinates: x = 688140; y = 4268511
Receiving Stream: Tributary to the Labadie Creek
First Classified Stream and ID: Labadie Creek (P) (1693)
USGS Basin & Sub-watershed No.: (10300200-0603)
Design flow is N/A. Actual flow is dependent upon rainfall.

Outfall #009 - Steam Electric Power Plant - SIC #4911
Ash Pond Emergency Spillway.
Legal Description: SE ¼, SW ¼, Sec. 18, T44N, R02E, Franklin County
UTM Coordinates: x = 688017; y = 426944
Receiving Stream: Tributary to Labadie Creek
First Classified Stream and ID: Labadie Creek (P) (1693)
USGS Basin & Sub-watershed No.: (10300200-0603)
Design flow is 85.37 MGD.

Permitted Feature #010- Steam Electric Power Plant - SIC #4911
Intake Structure
Legal Description: NW ¼, NE ¼, Sec.18, T44N, R02E, Franklin County
UTM Coordinates: x = 688556; y = 4270810
Receiving Stream: Missouri River (P)
First Classified Stream and ID: Missouri River (P) (1604) (303(d))
USGS Basin & Sub-watershed No.: (10300200-0603)

DRAFT

Outfall #001 (Notes 02-05)	**TABLE A-1. INTERIM EFFLUENT LIMITATIONS AND MONITORING REQUIREMENTS**	PAGE NUMBER 4 of 12 PERMIT NUMBER: MO-0004812

The permittee is authorized to discharge from outfall(s) with serial number(s) as specified in the application for this permit. The interim effluent limitations shall become effective on Effective Date and remain in effect through **Effective date + 10 years – 1 day**. Such discharges shall be controlled, limited and monitored by the permittee as specified below:

OUTFALL NUMBER AND EFFLUENT PARAMETER(S)	UNITS	**INTERIM EFFLUENT LIMITATIONS**			MONITORING REQUIREMENTS	
		DAILY MAXIMUM	WEEKLY AVERAGE	MONTHLY AVERAGE	MEASUREMENT FREQUENCY	SAMPLE TYPE
Flow (discharge)	cfs	*		*	daily	grab
Thermal Discharge Limit	BTUs/hr	11.16×10^9		*	daily	calculated
Temperature (effluent)	°F	*		*	daily	grab
Stream temperature change (ΔT)	°F	*		*	daily	calculated
MONITORING REPORTS SHALL BE SUBMITTED MONTHLY; THE FIRST REPORT IS DUE _____.						
Whole Effluent Toxicity (WET) test (Note 01)	TUc	*			Unscheduled	24 hr. composite
MONITORING REPORTS SHALL BE SUBMITTED ANNUALLY; THE FIRST REPORT IS DUE_____.						

Outfall #001 (Notes 02-05)	**TABLE A-2. FINAL EFFLUENT LIMITATIONS AND MONITORING REQUIREMENTS**

The permittee is authorized to discharge from outfall(s) with serial number(s) as specified in the application for this permit. The final effluent limitations shall become effective on **Effective Date + 10 years**. Such discharges shall be controlled, limited and monitored by the permittee as specified below:

OUTFALL NUMBER AND EFFLUENT PARAMETER(S)	UNITS	**FINAL EFFLUENT LIMITATIONS**			MONITORING REQUIREMENTS	
		DAILY MAXIMUM	WEEKLY AVERAGE	MONTHLY AVERAGE	MEASUREMENT FREQUENCY	SAMPLE TYPE
Flow (discharge)	cfs	*		*	daily	grab
Temperature (edge of mixing zone)	°F	90		*	daily	grab
Stream temperature change (ΔT)	°F	±5		*	daily	calculated
MONITORING REPORTS SHALL BE SUBMITTED MONTHLY; THE FIRST REPORT IS DUE _____.						
Whole Effluent Toxicity (WET) test (Note 01)	TUc	*			Unscheduled	24 hr. composite
MONITORING REPORTS SHALL BE SUBMITTED ANNUALLY; THE FIRST REPORT IS DUE_____.						

* Monitoring requirement only.

Note 1: Outfall #001 is not required to conduct regularly scheduled Whole Effluent Toxicity (WET) Testing. However, in the event that the permittee determines they must use a molluscicide or other toxic pollutants to remove organisms from intake structures, WET testing shall be conducted once per year as described in the terms and conditions for WET testing for Outfall #001, which is contained in Special Condition #17, on page 12 of 13 of this operating permit.

Note 2: Flow (Receiving Stream) is the measure in cubic feet per second (cfs) of the receiving stream. Obtaining appropriate stream flow data from the Hermann, MO USGS Gaging Station (06934500) or other location is the responsibility of the permittee.

Note 3: Temperature (Receiving Stream) is the measure of temperature of the stream in °F. It is designated with [T_s] in the following Notes below. For most facilities, the intake temperature can be used to determine receiving stream temperature; however, ambient stream temperature can also be used.

Note 4: Delta Temperature is the amount in temperature °F that a facility causes the receiving stream's temperature to raise at the end of the regulatory mixing zone. It is designated with [ΔT] in the equation below.

$\Delta T = [((Q_s/4)T_s + Q_eT_e) / ((Q_s/4) + Q_e))] - T_s$

Where:

$Q_s/4$ = Daily receiving stream's flow minus the intake flow divided by 4 (Mixing Consideration) in cubic feet per second (cfs). This can also be represented as the flow in the receiving stream's cross-sectional area divided by 4.

T_s = Daily receiving stream's temperature. This can be the actual ambient temperature of the receiving stream or the intake water temperature (both in °F).

Q_e = Daily effluent flow or intake flow.

T_e = Daily effluent temperature in °F.

Note 5: Thermal discharge effluent limit is in BTUs/hr using thermodynamic equations based on generation from all four units.

DRAFT

A. EFFLUENT LIMITATIONS AND MONITORING REQUIREMENTS

The permittee is authorized to discharge from outfall(s) with serial number(s) as specified in the application for this permit. The interim effluent limitations shall become effective upon issuance and remain in effect until **one year and 364 days from issuance**. Such discharges shall be controlled, limited and monitored by the permittee as specified below:

OUTFALL #02A EFFLUENT PARAMETER(S)	UNITS	INTERIM EFFLUENT LIMITATIONS			MONITORING REQUIREMENTS	
		DAILY MAXIMUM	WEEKLY AVERAGE	MONTHLY AVERAGE	MEASUREMENT FREQUENCY	SAMPLE TYPE
Flow	MGD	*		*	once/quarter***	24 hr. estimate
Biochemical Oxygen Demand$_5$	mg/L	45		30	once/quarter***	grab
Total Suspended Solids	mg/L	45		30	once/quarter***	grab
pH	SU	**		**	once/quarter***	grab
Ammonia as N	mg/L	*		*	once/quarter***	grab
Oil and grease	mg/L	15		10	once/quarter***	grab
E. Coli	#/100mL	*		*	once/quarter***	grab

MONITORING REPORTS SHALL BE SUBMITTED **QUARTERLY**; THE FIRST REPORT IS DUE _____.

FINAL EFFLUENT LIMITS FOR OUTFALL 02A

The permittee is authorized to discharge from outfall(s) with serial number(s) as specified in the application for this permit. The final effluent limitations shall become effective **two years from issuance** and remain in effect until expiration of the permit. Such discharges shall be controlled, limited and monitored by the permittee as specified below:

OUTFALL #02A EFFLUENT PARAMETER(S)	UNITS	FINAL EFFLUENT LIMITATIONS			MONITORING REQUIREMENTS	
		DAILY MAXIMUM	WEEKLY AVERAGE	MONTHLY AVERAGE	MEASUREMENT FREQUENCY	SAMPLE TYPE
Flow	MGD	*		*	once/quarter***	24 hr. estimate
Biochemical Oxygen Demand$_5$	mg/L	45		30	once/quarter***	grab
Total Suspended Solids	mg/L	45		30	once/quarter***	grab
pH	SU	**		**	once/quarter***	grab
Ammonia as N	mg/L	*		*	once/quarter***	grab
Oil and grease	mg/L	15		10	once/quarter***	grab
E. Coli (Note 6)	#/100mL	1030		206	once/quarter***	grab

MONITORING REPORTS SHALL BE SUBMITTED **QUARTERLY**; THE FIRST REPORT IS DUE _____. THERE SHALL BE NO DISCHARGE OF FLOATING SOLIDS OR VISIBLE FOAM IN OTHER THAN TRACE AMOUNTS.

STORMWATER OUTFALLS 003-006 ARE COVERED UNDER BENCHMARKS, SEE SPECIAL CONDITIONS # 11-13. SEMI-ANNUAL MONITORING RESULTS FROM THE BENCHMARKS SHALL BE SUBMITTED **SEMI-ANNUALLY**. THE FIRST REPORT IS DUE JULY 28, 2015**.**

* Monitoring requirement only.

** pH is measured in pH units and is not to be averaged. The pH is limited to the range of 6.0-9.0 pH units.

*** See table below for quarterly sampling

Sample discharge at least once for the months of:	Report is due:
January, February, March (1st Quarter)	April 28
April, May, June (2nd Quarter)	July 28
July, August, September (3rd Quarter)	October 28
October, November, December (4th Quarter)	January 28

Note 6: Final limitations and monitoring requirements for E. coli are applicable only during the recreational season from April 1 through October 31. The Monthly Average Limit for E. coli is expressed as a geometric mean.

DRAFT

A. EFFLUENT LIMITATIONS AND MONITORING REQUIREMENTS

The permittee is authorized to discharge from outfall(s) with serial number(s) as specified in the application for this permit. The final effluent limitations shall become effective upon issuance and remain in effect until expiration of the permit. Such discharges shall be controlled, limited and monitored by the permittee as specified below:

OUTFALL NUMBER AND EFFLUENT PARAMETER(S)	UNITS	FINAL EFFLUENT LIMITATIONS			MONITORING REQUIREMENTS	
		DAILY MAXIMUM	WEEKLY AVERAGE	MONTHLY AVERAGE	MEASUREMENT FREQUENCY	SAMPLE TYPE
Outfall #002 (Note 07)						
Flow	MGD	*		*	once/week	24 hr. total
Total Suspended Solids (Gross)	mg/L	*		*	once/week	grab
Total Suspended Solids (Net)	mg/L	100		30	once/week	grab
pH	SU	**		**	once/week	grab
Oil and grease	mg/L	15		10	once/month	grab
MONITORING REPORTS SHALL BE SUBMITTED **MONTHLY**; THE FIRST REPORT IS DUE _____.						
Chemical Oxygen Demand	mg/L	*		*	once/quarter***	grab
Sulfate as SO_4	mg/L	*		*	once/quarter***	grab
Chloride	mg/L	*		*	once/quarter***	grab
Boron, Total Recoverable	µg/L	*		*	once/quarter***	grab
Total Phosphorus	mg/L	*		*	once/quarter***	grab
Total Nitrogen	mg/L	*		*	once/quarter***	grab
MONITORING REPORTS SHALL BE SUBMITTED **QUARTERLY**; THE FIRST REPORT IS DUE _____.						
Whole Effluent Toxicity (WET) test	TUc	*			once/year	grab
MONITORING REPORTS SHALL BE SUBMITTED **ANNUALLY**; THE FIRST REPORT IS DUE_____. THERE SHALL BE NO DISCHARGE OF FLOATING SOLIDS OR VISIBLE FOAM IN OTHER THAN TRACE AMOUNTS.						
Outfall #009 (Notes 07-08)						
Flow	MGD	*		*	once/discharge	24 hr. estimate
Chemical Oxygen Demand	mg/L	*		*	once/discharge	grab
Total Suspended Solids (Gross)	mg/L	*		*	once/discharge	grab
Total Suspended Solids (Net)	mg/L	100		30	once/discharge	grab
pH	SU	**		**	once/discharge	grab
Oil and grease	mg/L	15		10	once/discharge	grab
Sulfate as SO_4	mg/L	*		*	once/discharge	grab
Chloride	mg/L	*		*	once/discharge	grab
MONITORING REPORTS SHALL BE SUBMITTED **QUARTERLY**; THE FIRST REPORT IS DUE _____. THERE SHALL BE NO DISCHARGE OF FLOATING SOLIDS OR VISIBLE FOAM IN OTHER THAN TRACE AMOUNTS.						
Permitted Feature #010						
Flow (stream)	cfs	*		*	continuous	continuous
Flow (intake)	cfs	*		*	daily	grab
Temperature (stream)	°F	*		*	daily	grab
Total Suspended Solids (intake)	mg/L	*		*	once/week	calculated
Hardness as $CaCO_3$	mg/L	*		*	once/month	grab
MONITORING REPORTS SHALL BE SUBMITTED MONTHLY; THE FIRST REPORT IS DUE _____. THERE SHALL BE NO DISCHARGE OF FLOATING SOLIDS OR VISIBLE FOAM IN OTHER THAN TRACE AMOUNTS.						

DRAFT

A. EFFLUENT LIMITATIONS AND MONITORING REQUIREMENTS (continued)

* Monitoring requirement only.

** pH is measured in pH units and is not to be averaged. The pH is limited to the range of 6.0-9.0 pH units.

*** See table below for quarterly sampling

Sample discharge at least once for the months of:		Report is due:
January, February, March	(1st Quarter)	April 28
April, May, June	(2nd Quarter)	July 28
July, August, September	(3rd Quarter)	October 28
October, November, December	(4th Quarter)	January 28

Note 7: Effluent limitations for TSS for Outfalls #002 and #009 are net limits. Credit for TSS in the intake water is authorized and subject to the following:

(a) Only water withdrawn from the Missouri River that is used for process water (e.g., fly ash transport) and subsequently discharged to the Missouri River shall be used in calculating the net discharge limit for Total Suspended Solids. Credit for Total Suspended Solids from other sources of water (e.g., rainwater) shall not be used for credit. Ameren Labadie has developed a water balance in calculating their net discharge based on intake from the Missouri river and not including the any other inputs from the site.

(b) Credit shall be granted only to the extent necessary to meet the Total Suspended Solids limit.

(c) The maximum credit shall not exceed the concentration of Total Suspended Solids in the intake water after any treatment of the intake water.

(d) All measures for flow and Total Suspended Solids must be made on the same day.

(e) Net discharge is to be calculated as follows:

$$[(Q_d \times 8.34 \times C_d) - (Q_r \times 8.34 \times C_r)] / (Q_d \times 8.34) = \text{TSS Net in mg/L}$$

Where:

Q_d = Flow from Outfall #002 or #009 (in MGD).
C_d = Concentration in TSS measure in the final effluent from Outfall #002 or #009 (in mg/L);
Q_r = Intake flow (in MGD) that flows to either Outfall #002 or #009
C_r = Intake flow TSS concentration (in mg/L).

Note 8: Sampling at Outfall #009 is required once per day in the event that a discharge occurs. When no discharge occurs, report as 'No Discharge'.

B. STANDARD CONDITIONS

In addition to specified conditions stated herein, this permit is subject to the attached Part I standard conditions dated March 1, 2014, and hereby incorporated as though fully set forth herein.

C. SPECIAL CONDITIONS

1. This permit may be reopened and modified, or alternatively revoked and reissued, to:
   (a) Comply with any applicable effluent standard or limitation issued or approved under Sections 301(b)(2)(C) and (D), 304(b)(2), and 307(a) (2) of the Clean Water Act, if the effluent standard or limitation so issued or approved:
      (1) contains different conditions or is otherwise more stringent than any effluent limitation in the permit; or
      (2) controls any pollutant not limited in the permit.
   (b) Incorporate new or modified effluent limitations or other conditions, if the result of a waste load allocation study, toxicity test or other information indicates changes are necessary to assure compliance with Missouri's Water Quality Standards.
   (c) Incorporate new or modified effluent limitations or other conditions if, as the result of a watershed analysis, a Total Maximum Daily Load (TMDL) limitation is developed for the receiving waters which are currently included in Missouri's list of waters of the state not fully achieving the state's water quality standards, also called the 303(d) list.

   The permit as modified or reissued under this paragraph shall also contain any other requirements of the Clean Water Act then applicable.

2. All outfalls must be clearly marked in the field.

DRAFT

C. SPECIAL CONDITIONS (continued)

3. It is a violation of the Missouri Clean Water Law to fail to pay fees associated with this permit (644.055 RSMo).

4. Changes in Discharges of Toxic Substances

The permittee shall notify the Director as soon as it knows or has reason to believe:

(a) That any activity has occurred or will occur which would result in the discharge of any toxic pollutant which is not limited in the permit, if that discharge will exceed the highest of the following "notification levels:"
   (1) One hundred micrograms per liter (100 µg/L);
   (2) Two hundred micrograms per liter (200 µg/L) for acrolein and acrylonitrile; five hundred micrograms per liter (500 µg/L) for 2,5 dinitrophenol and for 2-methyl-4, 6-dinitrophenol; and one milligram per liter (1 mg/L) for antimony;
   (3) Five (5) times the maximum concentration value reported for the pollutant in the permit application;
   (4) The level established in Part A of the permit by the Director.

(b) That they have begun or expect to begin to use or manufacture as an intermediate or final product or byproduct any toxic pollutant, which was not reported in the permit application.

5. Report as no-discharge when a discharge does not occur during the report period.

6. Water Quality Standards

(a) To the extent required by law, discharges to waters of the state shall not cause a violation of water quality standards rule under 10 CSR 20-7.031, including both specific and general criteria.

(b) General Criteria. The following general water quality criteria shall be applicable to all waters of the state at all times including mixing zones. No water contaminant, by itself or in combination with other substances, shall prevent the waters of the state from meeting the following conditions:
   (1) Waters shall be free from substances in sufficient amounts to cause the formation of putrescent, unsightly or harmful bottom deposits or prevent full maintenance of beneficial uses;
   (2) Waters shall be free from oil, scum and floating debris in sufficient amounts to be unsightly or prevent full maintenance of beneficial uses;
   (3) Waters shall be free from substances in sufficient amounts to cause unsightly color or turbidity, offensive odor or prevent full maintenance of beneficial uses;
   (4) Waters shall be free from substances or conditions in sufficient amounts to result in toxicity to human, animal or aquatic life;
   (5) There shall be no significant human health hazard from incidental contact with the water;
   (6) There shall be no acute toxicity to livestock or wildlife watering;
   (7) Waters shall be free from physical, chemical or hydrologic changes that would impair the natural biological community;
   (8) Waters shall be free from used tires, car bodies, appliances, demolition debris, used vehicles or equipment and solid waste as defined in Missouri's Solid Waste Law, section 260.200, RSMo, except as the use of such materials is specifically permitted pursuant to section 260.200-260.247.Neither free available chlorine nor total residual chlorine may be discharged from any unit for more than two hours in any one day.

7. There shall be no discharge of polychlorinated biphenyl (PCB) compounds such as those commonly used for transformer fluid.

8. The department may also require sampling and reporting as a result of illegal discharges, compliance issues, complaint investigations, or evidence of off-site impacts from activities from this facility. If such an action is needed, the department will specify in writing the sampling requirement, including such information as location and extent. It is a violation of this permit to fail to comply with said written notification to sample.

9. Before releasing water that has accumulated in secondary containment areas containing petroleum products, it must be examined for hydrocarbon odor and presence of a sheen. On-site remediation may take place prior to testing. If the presence of hydrocarbons is indicated, this water must be tested for Total Petroleum Hydrocarbons (TPH). The analytical method for testing TPH must comply with EPA approved testing methods listed in [40 CFR 136] and the water must be tested prior to release to ensure compliance with water quality standards. If the concentration for TPH exceeds 10mg/L, the water shall be taken to a WWTP for treatment.

10. Substances, regulated by federal law under the Resource Conservation and Recovery Act (RCRA) and Comprehensive Environmental Response, Compensation, and Liability Act (CERCLA), that are transported, stored, or used for maintenance, cleaning or repair, shall be managed according to RCRA and CERCLA. Ameren is exempt from Clean Water Act, Section 311, reporting for sulfuric acid and sodium hydroxide as per 40 CFR 117.12.

DRAFT

C. SPECIAL CONDITIONS (continued)

11. The permittee shall develop and implement the Storm Water Pollution Prevention Plan (SWPPP). The SWPPP must be kept on-site and should not be sent to DNR unless specifically requested. The permittee shall select, install, use, operate, and maintain the Best Management Practices prescribed in the SWPPP in accordance with the concepts and methods described in the following document: Developing Your Stormwater Pollution Prevention Plan, A Guide for Industrial Operators, (Document number EPA 833-B-09-002) published by the United States Environmental Protection Agency (USEPA) in February 2009.

    The SWPPP must include the following (continued):
    (a) A listing of specific Best Management Practices (BMPs) and a narrative explaining how BMPs will be implemented to control and minimize the amount of potential contaminants that may enter storm water. Minimum BMPs are listed in SPECIAL CONDITION #12 below.
    (b) The SWPPP must include a schedule for quarterly site inspections and a brief written report. The inspections must include observation and evaluation of BMP effectiveness, deficiencies, and corrective measures that will be taken. The department must be notified within fifteen (15) days by letter of any corrections of deficiencies. Deficiencies that consist of minor repairs or maintenance must be corrected within seven (7) days. Deficiencies that require additional time or installation of a treatment device to correct should be detailed in the written notification. Installation of a treatment device, such as an oil water separator, may require a construction permit. Inspection reports must be kept on site with the SWPPP. These must be made available to DNR personnel upon request.
    (c) A provision for designating an individual to be responsible for environmental matters.
    (d) A provision for providing training to all personnel involved in material handling and storage, and housekeeping of maintenance and cleaning areas. Proof of training shall be submitted on request of DNR.

12. Permittee shall adhere to the following minimum Best Management Practices:
    (a) Prevent the spillage or loss of fluids, oil, grease, fuel, etc. from vehicle maintenance, equipment cleaning, or warehouse activities and thereby prevent the contamination of storm water from these substances.
    (b) Provide collection facilities and arrange for proper disposal of waste products including but not limited to petroleum waste products, and solvents.
    (c) Store all paint, solvents, petroleum products and petroleum waste products (except fuels), and storage containers (such as drums, cans, or cartons) so that these materials are not exposed to storm water or provide other prescribed BMP's such as plastic lids and/or portable spill pans to prevent the commingling of storm water with container contents. Commingled water may not be discharged under this permit. Provide spill prevention control, and/or management sufficient to prevent any spills of these pollutants from entering waters of the state. Any containment system used to implement this requirement shall be constructed of materials compatible with the substances contained and shall also prevent the contamination of groundwater.
    (d) Provide good housekeeping practices on the site to keep solid waste from entry into waters of the state.
    (e) Provide sediment and erosion control sufficient to prevent or control sediment loss off of the property.

13. Outfalls #003-#006: This permit stipulates pollutant benchmarks applicable to Labadie stormwater discharges. The benchmarks do not constitute direct numeric effluent limitations; therefore, a benchmark exceedance alone is not a permit violation. Benchmark monitoring and visual inspections shall be used to determine the overall effectiveness of SWPPP and to assist in knowing when additional corrective action may be necessary to protect water quality. Benchmark sampling must occur a minimum of twice per year, once in the first half of the year (January-June) and once in the second half of the year (July-December). Sampling results must be submitted by July 28th and January 28th for the preceding semi-annual sampling event. Visual inspections must occur at a minimum of quarterly, as designated in Special Condition #11.

    If a sample exceeds a benchmark concentration you must review your SWPPP and your BMPs to determine what improvements or additional controls are needed to reduce that pollutant in your stormwater discharges. Any time a benchmark exceedance occurs a Corrective Action Report (CAR) must be completed. A CAR is a document that records the efforts undertaken by the facility to improve BMPs to meet benchmarks in future samples. CARs must be retained with the SWPPP and available to the department upon request. If the efforts taken by the facility are not sufficient and subsequent exceedances of a benchmark occur, the facility must contact the department if a benchmark value cannot be achieved. Failure to take corrective action to address a benchmark exceedance and failure to make measurable progress towards achieving the benchmarks is a permit violation.

Outfall #003 - #006		
Parameter	Units	Benchmark
Settleable Solids	mL/L/hr	1.5
Chemical Oxygen Demand	mg/L	90
pH	SU	6.5-9.0
Oil and Grease	mg/L	10

DRAFT

C. SPECIAL CONDITIONS (continued)

14. Use and disposal of Coal Ash
    (a) Disposal of ash is not authorized by this permit.
    (b) This permit does not pertain to permits for disposal of ash or exemptions for beneficial use of ash under the Missouri Solid Waste Management Law and regulations, as established in 10 CSR 80.
    (c) The requirements below are separate and in addition to the requirements established under the Resource Conservation and Recovery Act in 40 CFR 257. Ameren shall work with the Department's Solid Waste Management Program on meeting the requirements and timetables established in the 40 CFR 257 regulations, regarding coal combustion residual impoundments and utility waste landfills
    (d) This permit does not authorize off-site storage, use or disposal of ash in regard to water pollution control permits required under 10 CSR 20-6.015 and 10 CSR 20-6.200.
    (e) The permittee shall implement an effective groundwater monitoring program designed to determine if the unlined coal ash impoundment has an impact on groundwater quality, as groundwater is a water of the state per 10 CSR 20-2.010(82) and 10 CSR 20-7.031(1)(DD). The monitoring system must be capable of comparing up-gradient to down-gradient water quality in the first continuous water-bearing zone beneath the impoundment. The monitoring system must be based upon a thorough hydrogeologic characterization of the impoundment area that determines the appropriate hydrostratigraphic unit to monitor, its groundwater gradient(s) and any seasonal variations in its gradient(s). Any hydrogeologic characterization conducted for the design of the groundwater monitoring program shall be approved by the department's Geological Survey Program and must be conducted under the guidance of a geologist registered in the State of Missouri. The design of the groundwater monitoring program shall be approved by the department prior to installation. The number of monitoring wells required for the groundwater monitoring program shall be based on site-specific hydrogeologic conditions and sufficient for effective monitoring, but shall include a minimum of two up-gradient and four down-gradient wells.
    (f) In order to accomplish this, the permittee shall:
        (1) By 6 months from the date of issuance of this permit submit a Site Characterization Workplan to the Central Office for approval. Permittee shall develop the Site Characterization Workplan in accordance with Guidance for Conducting a Detailed Hydrogeologic Site Characterization and Designing a Groundwater Monitoring Program issued by the Geological Survey Program, Environmental Geology Section, dated December 10, 2010.
        (2) By 27 months from the date of issuance of this permit submit a Site Characterization Report detailing the findings from completion of the Site Characterization Workplan to the Central Office for verification of conclusions.
        (3) By 30 months from the date of issuance of this permit submit a Groundwater Monitoring & Sampling Plan (GMSAP) to the Central Office for approval. Permittee shall develop the GMSAP in accordance with the guidelines contained in Guidance for Conducting a Detailed Hydrogeologic Site Characterization and Designing a Groundwater Monitoring Program. At that time the permit will be modified to include the monitoring well locations.
        (4) By 36 months from the date of issuance of this permit have all elements of the GMSAP fully implemented. The facility shall, at a minimum, collect groundwater quality samples on a quarterly basis.
    (g) Data collected from the groundwater monitoring wells will be collected quarterly, and submitted to the department within 3 months of receipt of the results. Results shall be submitted electronically using forms provided by the department.

15. 316(b) Cooling Water Intake Structure
    (a) Ameren is required to continue operating intake structures as indicated in the approved 1980 and subsequent 2007 impingement studies. Intakes shall be operated in a manner that minimizes impingement and entrainment until the permittee has submitted the application required in 40 CFR 122.21 and 40 CFR 125 Subpart J and best technology available is established in accordance with Clean Water Act 316(b) regulations. The promulgated 316(b) regulations require modifications to reduce impingement and entrainment caused by intake structures.
    (b) Ameren shall follow the timetable in 40 CFR 122.21 and 40 CFR 125 Subpart J regulations regarding reduction in impingement and entrainment and their associated biomonitoring studies.
    (c) Ameren shall submit annual status reports by February 28 each year, detailing the progress of the previous year.
    (d) Six months prior to permit expiration, Ameren shall submit their application for 316(b) detailing the results of the biomonitoring studies and the selected path forward for implementing impingement and entrainment modifications at the intake structure.
    (e) This permit may be reopened and modified, or alternatively revoked and reissued to: incorporate new or modified requirements applicable to existing cooling water intake structures under Section 316(b) of the Clean Water Act. In the event that, it is necessary for this permit to be reopened and modified, or alternatively revoked and reissued, permittee shall comply with any such new or modified requirements or standards applicable to existing cooling water intake structures under 316(b) of the Clean Water Act.

DRAFT

C. SPECIAL CONDITIONS(continued)

16. Chronic Whole Effluent Toxicity (WET) tests shall be conducted as follows:

SUMMARY OF CHRONIC WET TESTING FOR THIS PERMIT					
OUTFALL	AEC	Chronic Toxic Unit (TU_c)	FREQUENCY	SAMPLE TYPE	MONTH
001	62%	*	unscheduled	grab	any
002	7%	*	once/year	grab	August

*Monitoring only

Outfall 001 Dilution Series						
100%	62%	25%	12.5%	6.25%	(Control) 100% upstream, if available	(Control) 100% Lab Water, also called synthetic water
Outfall 002 Dilution Series						
100%	50%	25%	7%	3.5%	(Control) 100% upstream, if available	(Control) 100% Lab Water, also called synthetic water

a) Freshwater Species and Test Methods

i. Species and short-term test methods for estimating the chronic toxicity of NPDES effluents are found in the fourth edition of *Short-term Methods for Estimating the Chronic Toxicity of Effluents and Receiving Waters to Freshwater Organisms* (EPA/821/R-02/013, 2002; Table IA, 40 CFR Part 136). The permittee shall concurrently conduct 7-day, static, renewal toxicity tests with the following vertebrate species:

- The fathead minnow, *Pimephales promelas* (Survival and Growth Test Method 1000.0).

And the following invertebrate species:

- The daphnid, *Ceriodaphnia dubia* (Survival and Reproduction Test Method 1002.0).

ii. Chemical and physical analysis of an upstream control sample and effluent sample shall occur immediately upon being received by the laboratory, prior to any manipulation of the effluent sample beyond preservation methods consistent with federal guidelines for WET testing that are required to stabilize the sample during shipping. Where upstream receiving water is not available, synthetic laboratory control water may be used.

iii. Test conditions must meet all test acceptability criteria required by the EPA Method used in the analysis.

iv. Any and all chemical or physical analysis of the effluent sample performed in conjunction with the WET test shall be performed at the 100% Effluent concentration in addition to analysis performed upon any other effluent concentration.

v. All chemical analyses shall be performed and results shall be recorded in the appropriate field of the report form. The parameters for chemical analysis include, but are not limited to Temperature (°C), pH (SU), Conductivity (µMohs), Dissolved Oxygen (mg/L), Total Residual Chlorine (mg/L), Un-ionized Ammonia (mg/L), Total Alkalinity (mg/L), Total Recoverable Boron (µg/L), Total Recoverable Molybdenum (µg/L), and Total Hardness (mg/L).

b) Reporting of Chronic Toxicity Monitoring Results

i. WET test results shall be submitted by eDMR, or with the permittee's Discharge Monitoring Reports by September 28, 20XX. to the St. Louis Regional Office, The submittal shall include:

1. A full laboratory report for all toxicity testing.
2. Copies of chain-of-custody forms.
3. The WET form provided by the department upon permit issuance.

ii. The report must include a quantification of chronic toxic units ($TU_c = 100/IC_{25}$) reported according to the *Methods for Measuring the Chronic Toxicity of Effluents and Receiving Waters to Freshwater and Marine Organisms* chapter on report preparation and test review. The 25 percent Inhibition Effect Concentration (IC_{25}) is the toxic or effluent concentration that would cause 25 percent reduction in mean young per female or in growth for the test populations.

c) Permit Reopener for Chronic Toxicity

In accordance with 40 CFR Parts 122 and 124, this permit may be modified to include effluent limitations or permit conditions to address chronic toxicity in the effluent or receiving waterbody, as a result of the discharge; or to implement new, revised, or newly interpreted water quality standards applicable to chronic toxicity.

DRAFT

D. SCHEDULE OF COMPLIANCE – Thermal Discharges

1. The permittee must attain compliance with the final thermal effluent limits as soon as possible, but no later than ten years after permit issuance.
2. During this permit cycle, Ameren is required to reestablish a biological monitoring program in accordance with 40 CFR 125 Subpart H, to evaluate the impact of thermal discharges.

(a) Within nine months of the permit issuance date, the permittee shall submit for department review, a Study Plan that outlines how the permittee will conduct water quality and biological assessments necessary to assure the protection and propagation of a balanced, indigenous community (BIC) of fish, shellfish, and invertebrates in the Missouri River downstream in the vicinity of the plant's thermal discharge.

(b) The Study Plan shall be designed to include additional downstream reference areas to demonstrate recovery, and differentiate the cumulative effects of the thermal discharge on the Representative Important Species (RIS) in the receiving stream.

(c) The Study Plan shall include information on the following elements:
   (1) an aquatic community typically characterized by diversity at all trophic levels;
   (2) the capacity of the community to sustain itself through cyclic seasonal changes;
   (3) presence of necessary food chain species;
   (4) non-domination of pollution-tolerant species; and
   (5) indigenous.

(d) Upstream reference areas must also be included in the Study

(e) The Study Plan shall be modified, if necessary, within 60 days of receipt of comments from the department.

(f) Within sixty (60) days of approval of the Study Plan, Ameren shall implement the Study Plan.

(g) Annual status reports are due February 28th detailing the results of the previous year's monitoring events.

(h) Six months prior to permit expiration, the permittee shall submit a report detailing how the results of the monitoring program and the recommended path forward to achieve compliance. If a recommendation of the report is reissuance of the 316(a) variance, then a request for reissuance of the 316(a) variance must be submitted detailing how the monitoring program supports the requirements of no appreciable harm, specifically:
   (1) That no appreciable harm has resulted from the normal component of the discharge taking into account the interaction of such thermal component with other pollutants and the additive effect of other thermal sources to a balanced, indigenous community of shellfish, fish and wildlife in and on the body of water into which the discharge has been made; or
   (2) If applicable, that despite the occurrence of such previous harm, the desired alternative effluent limitations (or appropriate modifications thereof) will nevertheless assure the protection and propagation of a balanced, indigenous community of shellfish, fish and wildlife in and on the body of water into which the discharge is made.

3. If the permittee fails to meet any of the interim dates above, the permittee shall notify the department in writing of the reason for noncompliance no later than 14 days following each interim date.

4. Following completion of these studies and the submittal of a renewal application, Ameren reserves the right to seek a variance from listed thermal effluent limitations. Such variance could include alternative measurement methodologies or criteria, alternative thermal effluent limitations or an alternative schedule to implement physical and/or operational modifications as may be warranted. Based upon the results of the aquatic community studies, Ameren's renewal application submittal and the time necessary for agency(s) review to reach a final determination, the deadline for compliance with the final thermal effluent limitations may be modified accordingly

E. SCHEDULE OF COMPLIANCE – *E Coli*.

1. The permittee must attain compliance with the final effluent limits as soon as possible, but no later than two years after permit issuance.

2. Within one year of issuance of this permit, the permittee shall report progress made in attaining compliance with the final effluent limits.

3. If the permittee fails to meet any of the interim dates above, the permittee shall notify the department in writing of the reason for noncompliance no later than 14 days following each interim date.

Please submit progress reports to the Missouri Department of Natural Resources, St. Louis Regional Office, 7545 South Lindbergh, Suite 210, St. Louis, MO 63125.

DRAFT

MISSOURI DEPARTMENT OF NATURAL RESOURCES
FACT SHEET FOR THE PURPOSE OF RENEWAL OF
MO-0004812
AMEREN MISSOURI-LABADIE ENERGY CENTER

The Federal Water Pollution Control Act ("Clean Water Act" Section 402 Public Law 92-500 as amended) established the National Pollution Discharge Elimination System (NPDES) permit program. This program regulates the discharge of pollutants from point sources into the waters of the United States, and the release of storm water from certain point sources. All such discharges are unlawful without a permit (Section 301 of the "Clean Water Act"). After a permit is obtained, a discharge not in compliance with all permit terms and conditions is unlawful. Missouri State Operating Permits (MSOPs) are issued by the Director of the Missouri Department of Natural Resources (department) under an approved program, operating in accordance with federal and state laws (Federal "Clean Water Act" and "Missouri Clean Water Law" Section 644 as amended). MSOPs are issued for a period of five (5) years unless otherwise specified.

As per [40 CFR Part 124.8(a)] and [10 CSR 20-6.020(1)2.] a Factsheet shall be prepared to give pertinent information regarding the applicable regulations, rationale for the development of effluent limitations and conditions, and the public participation process for the Missouri State Operating Permit (operating permit) listed below. A Factsheet is not an enforceable part of an operating permit. This Factsheet is for a Major ☒; Industrial Facility ☒; 316(a) Variance ☒; and/or permit with widespread public interest ☒.

Part I – Facility Information

Facility Type: IND
Facility SIC Code(s): 4911- Electric Power Generation

Facility Description:

The Labadie Energy Center (Labadie) is located 35 miles west of St. Louis, outside Labadie, MO, on 1,100 acres adjacent to the Missouri River. The plant consists of four generating units with a net capability of 2,407 megawatts (MW). The first unit started operating in May 1970 and the plant was fully operational in June 1973. The typical annual generation capacity is between eighteen and nineteen million megawatt hours (18,000,000-19,000,000 MWHR). Labadie burns an average of 10 million tons of Powder River basin sub-bituminous coal annually. On average, Labadie receives two trains of coal per day. The current annual coal combustion production is over 500,000 tons per year. The coal pile size is approximately 67 acres, two million tons and is approximately 50 feet high, which is enough coal for approximately 65 days. Labadie does not have barge loading capabilities.

Other environmental permits and identification numbers associated to Ameren Labadie, include:

- Title V Air Permit from the department's Air Pollution Control Program (2907100003)
- Small Quantity Hazardous Waste Generator under the department's Hazardous Waste Program (MOD079933198)
- Major Water User from the department's Water Resources Program (071300005)
- At this time, Ameren does not have a permit from the department's Solid Waste Program; however Ameren submitted their construction permit application for the Utility Waste Landfill on January 29, 2013.
- EPA identifies Ameren Labadie with the following EPA ID number: 110000440470

The permit renewal has interim heat rejection limits of 11.16 x10^9 British thermal units per hour (btus/hr) with a 10 year schedule of compliance to meet the Missouri Water Quality Standards temperature criteria of 90°F and change in temperature of ±5°F. The heat rejection interim effluent limits are the same as the existing 316(a) variance limits approved in the previous permit renewal. As interim measures with this permit renewal, Labadie is required to reestablish its biological monitoring program both upstream and downstream of the discharge to document any impacts to the biological community in the Missouri River at that location. Six months prior to renewal, Ameren shall submit a report detailing the recommendation for any changes to the facility.

The Labadie Energy Center has two ash ponds: (1) the original ash pond, also called bottom ash pond; and (2) a lined fly ash pond. The bottom ash pond was constructed at the beginning of plant operation in 1970 and does not contain a liner. It has a surface area of 154 acres, with a total storage capacity of 12,000 acre-ft and the current volume of stored ash is approximately 11,403 acre-ft. The fly ash pond is lined and was constructed in 1993. Its total surface area is 79 acres, with a total storage capacity of 1,900 acre-ft and the current volume of stored ash is approximately 1,353 acre-ft. Based on a historic review from 2006 through 2010, Labadie generated an average of 390,000 tons of fly ash and 166,000 tons of bottom ash yearly.

According to Ameren's webpage, the proposed future landfill site is located adjacent to the plant and proposed to be 449 acres. See the subsection below on Utility Waste Landfill for more information.

DRAFT

In 1995, Labadie switched to Powder River Basin sub-bituminous coal from bitimunous coal. The switch was to help Labadie meet sulfur oxide (SO_x) requirements from the Air Pollution program. Since the facility has been in operation, the plant has reduced air emissions, increased operating capacity per unit and increased time between outage intervals, as seen in the table below.

	1977	1985	2001
Coal (Btu/lb)	11,000	11,000	8,600
Generation (mwhrs)	12,200,000	13,100,000	16,700,000
Coal Burned (tons)	5,250,000	5,000,000	9,500,000
Max. Unit Capacity	580	580	630
NOx (lb/mbtu)	0.7	0.6	0.115
SOx (lb/mbtu)	6.0	4.8	0.52
Operating Availability	75%	77%	90%
Pulverizer Capacity	90,000	90,000	120,000
Outage Interval	1 year	18 months	3 years

The adjacent Quikrete Concrete Packaging Facility recycles more than 10,000 tons of fly ash and 60,000 tons of bottom ash annually into about two million bags of high-quality concrete mix. The fly ash is used as a partial replacement for Portland cement in the concrete manufacturing process. Because approximately one ton of carbon dioxide (CO_2) is emitted for every ton of Portland cement used to manufacture concrete, the facility represents a 10,000-ton reduction in annual CO_2 emissions (http://www.ameren.com/sites/aue/Archive/ClimateChange/Pages/ADC_ChangeWaste.aspx)

The closest public drinking water treatment plant and intake on the Missouri River is St. Louis- Howard Bend Water Treatment Plant (MO-0004928) located in Chesterfield, MO. This is approximately 20 miles downstream from the Labadie Energy Center. The St. Charles County PWSD #2 Water Treatment Plant (MO-0087718) has numerous drinking water wells on the northern bank of the Missouri River, approximately 8 miles downstream of Labadie's discharges.

This permit may be modified during its cycle for the addition of groundwater monitoring wells around the existing ash ponds, to incorporate the utility waste landfill and its flows into the permit, to incorporate revised effluent guidelines applicable to the site, new coal combustion residual requirements, and to reflect any other changes at the facility.

Chemical Usage at the Plant

In the renewal application, Ameren provided a list of chemicals used or stored onsite at Labadie. All chemicals used are covered under the facility's Spill Prevention Control Plan. Ameren may want to incorporate the spill plan in with the stormwater prevention pollution plan, to ensure accidental releases are controlled onsite.

Intake Structure

Design intake flow: 1438 MGD
Average intake flow: 966 MGD

The plant's cooling water intake structure is located along the Missouri River shoreline and consists of four cells, one for each unit. Within each cell are 2 bays containing a 10 foot wide vertical conventional traveling screen for a total of eight traveling screens for the entire intake. There is a ten foot wide by nine foot high upper opening and a nine foot wide by seven foot high lower opening to each bay. At the mouth of the opening there are steel trash racks made of bars with 2.5 inch clearing spacing. The intake is equipped with a mechanical rake to clear debris from the trash racks.

The traveling screens have ½ inch woven wire mesh and are operated once per 8 hour shift for 1.25 revolutions at 5 feet per minute (fpm). If a 6 inch head differential occurs, the screens automatically will rotate at 20 feet per minute until the head differential is reduced to 4 inches, after which the rotation speeds reduce to 5 fpm. Debris and fish on the screens are removed by front and rear mounted spray washes at 100 psi, and are collected in screenwash troughs located in front of and behind the screens. The screenwash troughs lead to an inclined pipe discharging to the river at the downstream end of the intake structure.

The heated water is discharged through an 8 foot diameter pipe leading to a seal well, where the water flows over a weir into a 0.22 mile discharge canal located downstream from the intake structure. A warming line recirculates heated water back to the intake to prevent ice buildup in the winter.

In addition to the narrative description below for each of the ten (10) outfalls, there is a flow diagram for the outfalls located in Appendix B: Flow Diagram.

DRAFT

Outfall #001 – Non-contact Cooling Water:
Outfall #001 discharges once-through cooling water that is withdrawn from the Missouri River. The cooling water is passed through condensers and other heat exchangers and is discharged to the Missouri River. The water flows through a 0.22 mile discharge canal. Portions of the cooling water system are intermittently treated with biocides, which is discussed below. The cooling water is also used to lubricate the circulating water pump bearings in the intake structure. This lubrication water mixes with the normal pump flow and is a component of the average outfall flow (less than 0.02% of the discharge flow).

The permittee's current approach to macroinvertebrate control consists of molluscicide treatment of intake structures cells, auxiliary coolers (condensate, condensers, jacket water coolers), and high and low pressure untreated (raw) water systems using commercial product. The use of the commercial products may cause the need for a Federal (EPA) pesticide permit.

Outfall #002 – Ash Pond:
Outfall #002 is the discharge from the facility's wastewater treatment pond that provides treatment for fly ash and bottom ash sluice water, other low volume wastes, coal pile run-off and stormwater run-off via sedimentation and neutralization. This facility generates approximately 83,000 tons of bottom ash and 194,000 tons of fly ash per year. Fly ash is conveyed dry to silos or wet sluiced to the ash pond and bottom ash is conveyed to the ash pond from which they can be respectively recovered for beneficial use projects. Based on a historic review from 2006 through 2010, Labadie generated an average of 390,000 tons of fly ash and 166,000 tons of bottom ash yearly. Other sources of wastewater that are discharged from Outfall #002 include: Mill Pyrite Removal System; Bottom Ash Removal System; Sanitary Wastewater (Outfall #02A); Fly Ash Removal System; Demineralizer Sump; Coal Reclaim Tunnel Sump; and Coal Pile Run-off.

Outfall #02A– Domestic Wastewater Treatment Plant:
This outfall consists of treated domestic wastewater from an activated sludge treatment plant. The effluent is discharged to the ash pond and released via Outfall #002. Domestic wastewater from the whole facility is treated at the plant. Sludge/biosolids are removed by contract hauler. Labadie retains a contract hauler to take sludge to MSD Bissell Point (MO-0025178) for incineration. At Labadie, there is storage capacity for 8,500 gallons, which is about 138 days. Design sludge production is for 0.85 dry tons per year. The permit contains a schedule of compliance for Ameren to install disinfection at the treatment plant. Ameren plans to install ultraviolet disinfection.

Outfall #003-Stormwater Runoff:
Outfall #003 is representative of three similar discharge areas. This outfall drains a total of 5 acres, with 3.8 acres impervious surface. These areas are predominantly employee vehicle parking areas. The first discharge point drains stormwater from the paved employee parking and the unpaved overfill employee parking areas. The second discharge point drains stormwater from the largest area of the paved employee parking lot. The second drainage area is considered Outfall #003 as it the location most likely to note oil and grease discharges. The third discharge point drains part of the paved employee parking lot and a grassy area in front of the administration building. Stormwater runoff from these locations drains to the Missouri River.

Outfall #004-Stormwater Runoff:
Outfall #004 is a stormwater outfall from a single pipe that drains runoff from a paved outdoor materials storage area. The discharge goes through a swale in the Missouri River. This outfall drains 1.4 acres, all of which is impervious surface.

Outfall #005-Stormwater Runoff:
Outfall #005 drains stormwater runoff from the paved access roads at the water treatment plant and the immediately adjacent gravel lined drainage swales. This outfall drains 0.1 acres, with 0.05 acres impervious surface. The yard drains around the water treatment plant are routed to the Ash Pond and final discharge through Outfall #002. Outfall #005 is a single pipe, which discharges to a partially levied area on the bank of the Missouri River. The two inlets to the pipe are contained within separate concrete-walled detention structures, which allow localized settling during storm events prior to discharge.

Outfall #006- Stormwater Runoff:
Outfall #006 is representative of multiple discharges along the plant access road. This outfall drains 3.7 acres, with 1.8 acres impervious surface. These discharges are all located along the plant access road, predominately at the northwestern edge of the coal pile. Stormwater runoff from the paved access road and from the gravel lined drainage swale between the access road and the railroad tracks is discharge from pipes beneath the road. The inlets are contained within a concrete walled detention structure, which is recessed into a paved apron. During routine storm events, these structures reduce stormwater runoff velocities, allowing localized settling. This outfall discharges to the Missouri River through the man-made canal for Outfall 002.

Outfall #007 and #008- Stormwater runoff:
Outfalls #007 and #008 are remote from routine plant operations and plant related wastewaters systems. Monitoring is waived for these outfalls as Ameren has installed best management practices. Outfall #007 is representative of multiple discharges along the plant access road remote from active plant areas. All discharges are used to drain stormwater from the paved access road and from the adjacent gravel areas between the access road and the railroad tracks. Each discharge has a small concrete drop structure at its inlet.

This outfall drains 3.3 acres, with 1.7 acres impervious surface. Outfall #008 is representative of discharges along the plant access road even more remote from plant active areas than Outfall #007. Discharges in this area go to a wetland mitigation area and to Labadie Creek. This outfall drains 1.0 acres, with 0.5 acres impervious surface. Monitoring was not established for these outfalls due to the distance from plant operations and the small chances for discharges.

Outfall #009 – Ash Pond Emergency Spillway:
Ameren has installed an emergency spillway on the Ash Ponds. The addition of the spillway is based on the recommendation of the department's Dam Safety Program. The emergency spillway is at the south side of the bottom ash pond. The emergency spillway is designed for the 100 year, 24 hour storm event (~7 inches, according to Urban Hydrology for Small Watersheds, Table B-8). The watershed area for the emergency spillway is 308 acres. The emergency spillway would discharge in the event of an extreme precipitation event, along with loss of power or mechanical failure of transfer and discharge pumps.

Have any changes occurred at this facility or in the receiving water body that effects effluent limit derivation?
Yes ☒: Outfall #009 added due to construction of emergency spillway at ash pond upon the recommendation of Missouri Department of Natural Resources Water Resources Center Dam Safety Program in consultation with Ameren. Outfall #02A has interim and final limits for *E. Coli*, while the previous permit did not contain bacteria limits. The permit also contains a schedule of compliance for establishment of biomonitoring. Labadie is also required to establish a groundwater monitoring program to characterize movement and potential impacts of groundwater around the ash ponds. As part of the Technology Based Effluent determination, monitoring is required for boron at Outfall #002, see Appendix C. This permit reestablishes monitoring requirements for stormwater, including the development of a Stormwater Pollution Prevention Plan. Stormwater monitoring is required for Outfalls #003 - #006 with benchmarks. Monitoring is waived for outfalls #007 - #008, as they are removed from plant operations, see Appendix A: Facility Map. Thermal discharge effluent limits established with the 316(a) variance originally issued in 1977 are retained as interim effluent limits. For information on action taken on the seeps, please see the discussion below.

Application Date: 09/16/1998; revised application submitted 12/28/2011 and April 02, 2012
Expiration Date: 03/17/1999
Last Inspection: 12/11/2012 In Compliance ☒;

OUTFALL(S) TABLE:

OUTFALL	DESIGN FLOW (CFS)	TREATMENT LEVEL	EFFLUENT TYPE	DISTANCE TO CLASSIFIED SEGMENT (MI)
001	2,213	Once-through	Noncontact Cooling Water	0.0
002	89.59	Settling, Neutralization	Process wastewater, domestic, stormwater	0.0
002A	0.078	Secondary	Domestic	0.0
003	NA	BMPs	Stormwater	0.0
004	NA	BMPs	Stormwater	0.0
005	NA	BMPs	Stormwater	0.0
006	NA	BMPs	Stormwater	0.0
007	NA	BMPs	Stormwater	~0.1
008	NA	BMPs	Stormwater	~0.12
009	89.59	BMPs	Emergency Spillway	~0.12

DRAFT

Comments:

E. Coli Schedule of Compliance:
Missouri adopted whole body contact (WBC-B) designated use in 2006 for the Missouri River. Because the permit was administratively continued, the department was previously unable to establish bacteria requirements in the permit. 10 CSR 20-7.015(9)(J)(1) does state that if the designated use was established prior to 2012, the facility would need to be in compliance by December 31, 2013. However, again as the permit has been administratively continued since before 2006 when the designated use was established, 10 CSR 20-7.015(9)(J)(2) allows the establishment of a schedule of compliance and as such a two year schedule of compliance is being given. In conversations with Ameren, they are preparing for this requirement and are plan to apply for a construction permit for ultraviolet disinfection.

Pollutants Typically Associated with Steam Electric Industry Discharges:
The US EPA *Interim Detailed Study Report for the Steam Electric Power Generating Point Source Category* (Interim Study Report) utilized available data to characterize the waste streams discharged from steam electric facilities, as well as the technologies and practices used in the industry to control the discharge of waste pollutants (Chapter 5). EPA is expected to release the updated effluent limit guidelines in 2014. Table 5-1 in Chapter 5 of the Interim Study Report presents an overview of the types of pollutants associated with the various waste streams. Pollutants contained in the Interim Study Report are based on data previously collected by the EPA during the 1974 and 1982 rulemaking efforts and the 1996 Preliminary Data Summary, data provided by the Utility Water Act Group (UWAG) and Electric Power Research Institute (EPRI). Staff has reviewed the Discharge Monitoring Reports (DMRs) and renewal applications Forms C and D for each of the outfalls in this operating permit. Effluent testing results contained in Forms C and D for each outfall were compared directly with pollutants associated with the various waste streams for each of the outfalls. Below is the list of pollutants based on process waste streams for this facility:

- Cooling Water: Once-Through or Cooling Tower Blowdown (Outfall #001):
  Chlorine, Iron, Copper, Nickel, Aluminum, Boron, Chlorinated Organic Compounds, Suspended Solids, Brominated Compounds, and Non-Oxidizing Biocides.

- Ash Handling: Bottom or Fly Ash (Outfall #002):
  TSS, Sulfate, Chloride, Magnesium, Nitrate, Aluminum, Antimony, Arsenic, Boron, Cadmium, Chromium, Copper, Cyanide, Iron, Lead, Mercury, Nickel, Selenium, Silver, Thallium, Vandium, and Zinc.

- Coal Pile Runoff (Outfall #002):
  Acidity, COD, Chloride, Sulfate, TSS, Aluminum, Antimony, Arsenic, Boron, Beryllium, Cadmium, Chromium, Copper, Iron, Lead, Manganese, Mercury, Nickel, Selenium, Silver, Thallium, Vandium, and Zinc.

- Other Low-Volume Waste Streams (Outfall #002):
  Suspended Solids, Dissolved Solids, Oil and Grease, Phosphates, Surfactants, Acidity, Methylene Chloride, Phthalates, BOD_5, COD, Fecal Coliform and Nitrates.

For the above pollutants, staff drafting this operating permit only compared the applicable pollutants based on Missouri's Water Quality Standards criteria and designated uses. For any of the outfalls that do not contain one of the process wastewater types above, these pollutants were not reviewed (i.e., Outfalls #02A - #008). For Outfalls #003 and 004, stormwater outfalls, staff drafting this permit and fact sheet reviewed the applicable Forms 2F, C, and D to determine if effluent from this outfall had potential to exceed Missouri's Water Quality Standards for the tested pollutants. For discussion on best professional judgment TBEL determination, please see Appendix C: TBEL Determination. In the review of the background data from 1969 to 2012 of the Missouri River at Hermann, and compared to the concentrations Ameren sampled for, boron has been identified as constituent of concern and this permit requires quarterly monitoring for the permit cycle. Ameren is pursuing a utility waste landfill for storage and disposal of coal combustion residuals (ash).

Part II – Operator Certification Requirements

As per [10 CSR 20-6.010(8) Terms and Conditions of a Permit], permittees shall operate and maintain facilities to comply with the Missouri Clean Water Law and applicable permit conditions and regulations. Operators or supervisors of operations at regulated wastewater treatment facilities shall be certified in accordance with [10 CSR 20-9.020(2)] and any other applicable state law or regulation. As per [10 CSR 20-9.010(2)(A)], requirements for operation by certified personnel shall apply to all wastewater treatment systems, if applicable, as listed below:

Not Applicable ☒; This facility is not required to have a certified operator.

DRAFT

Part III – Receiving Stream Information

APPLICABLE DESIGNATIONS OF WATERS OF THE STATE:
As per Missouri's Effluent Regulations [10 CSR 20-7.015], the waters of the state are divided into seven (7) categories. Each category lists effluent limitations for specific parameters, which are presented in each outfall's Effluent Limitation Table and further discussed in the Derivation & Discussion of Limits section.

Missouri or Missouri River [10 CSR 20-7.015(2)]: ☒
All Other Waters [10 CSR 20-7.015(8)]: ☒

10 CSR 20-7.031 Missouri Water Quality Standards, the department defines the Clean Water Commission water quality objectives in terms of "water uses to be maintained and the criteria to protect those uses." The receiving stream and/or 1st classified receiving stream's beneficial water uses to be maintained are located in the Receiving Stream Table located below in accordance with [10 CSR 20-7.031(3)].

RECEIVING STREAM(S) TABLE:

WATERBODY NAME	CLASS	WBID	DESIGNATED USES*	12-DIGIT HUC	EDU**
Tributary to Labadie Creek	--	--	General Criteria	10300200-0603	Ozark/ Moreau/ Loutre
Labadie Creek	P	1693	AQL, LWW, WBC(B)		
Missouri River	P	1604	AQL, DWS, IND, LWW, SCR, WBC(B)		

* - Protection of Warm Water Aquatic Life and Human Health-Fish Consumption (AQL), Cool Water Fishery(CLF), Cold Water Fishery (CDF), Drinking Water Supply (DWS), Industrial (IND), Groundwater (GRW), Irrigation (IRR), Livestock & Wildlife Watering (LWW), Secondary Contact Recreation (SCR),Whole Body Contact Recreation (WBC).
** - Ecological Drainage Unit

RECEIVING STREAM(S) LOW-FLOW VALUES TABLE:

RECEIVING STREAM (C, P)	LOW-FLOW VALUES (CFS)		
	1Q10	7Q10	30Q10
Labadie Creek	0.1	0.1	1.0
Missouri River[i]	23,337	39,013	55,169

[i] Missouri River flow data is from USGS Gaging station 06934500 at Hermann, MO from July 1969 to July 2012.

MIXING CONSIDERATIONS TABLE:

RECEIVING STREAM	MIXING ZONE (CFS) [10 CSR 20-7.031(4)(A)…]		ZONE OF INITIAL DILUTION (CFS) [10 CSR 20-7.031(4)(A)…]	
	7Q10	30Q10	1Q10	7Q10
Labadie Creek	0.025	0.25	0.0025	0.02
Missouri River[i]	9,753.25	1,3792.25	975.32	1,379.23

[i]: default mixing of 25% for pollutants of concern, for Outfalls 002-004,008-009

Outfalls #005 - #009: Mixing Zone: Not Allowed [10 CSR 20-7.031(4)(A)4.B.(I)(a)]
Zone of Initial Dilution: Not Allowed [10 CSR 20-7.031(4)(A)4.B.(I)(b)].

MIXING CONSIDERATIONS - THERMAL:
Missouri's Water Quality Standards [10 CSR 20-7.031(4)(A)1.], specifically state that mixing considerations for toxics do not apply to thermal mixing considerations and that thermal mixing considerations are located in [10 CSR 20-7.031(4)(D)6.], which states thermal mixing considerations are limited to 25% of the cross-sectional area or volume of a river, unless a biological survey performed in accordance with 316(a) of the Clean Water Act indicate no significant adverse effect on aquatic life. For the purpose of mixing considerations, the department typically uses the 25% of the daily flow vs cross-sectional area. However, based on Thermal Plume Study information presented to the department by Ameren, the permit is being reissued with the thermal discharge effluent limits, as previously granted in the permit issued with the approval of the 316(a) variance as interim effluent limits. This permit requires new data to be collected for the characterization of the biological community around Labadie and for the potential reissuance of the 316(a) at the next permit renewal or compliance with the department's temperature criteria in ten years.

DRAFT

RECEIVING STREAM MONITORING REQUIREMENTS:

This permit does not identify where instream/receiving stream monitoring will occur. As part of the reestablishment of the biomonitoring program for 316(a) and for compliance with the monitoring requirements of 316(b), the facility is required to establish a representative biomonitoring program, upstream and downstream of the effluent discharges and monitoring at the intake structure. The department will work with the permittee to review any proposed monitoring programs.

Part IV – Rationale and Derivation of Effluent Limitations & Permit Conditions

ALTERNATIVE EVALUATIONS FOR NEW FACILITIES:
As per [10 CSR 20-7.015(4)(A)], discharges to losing streams shall be permitted only after other alternatives including land application, discharges to a gaining stream and connection to a regional wastewater treatment facility have been evaluated and determined to be unacceptable for environmental and/or economic reasons.

Not Applicable ☒: The facility does not discharge to a Losing Stream as defined by [10 CSR 20-2.010(36)] & [10 CSR 20-7.031(1)(N)], or is an existing facility.

ANTI-BACKSLIDING:
A provision in the Federal Regulations [CWA §303(d)(4); CWA §402(c); 40 CFR Part 122.44(I)] that requires a reissued permit to be as stringent as the previous permit with some exceptions.

Applicable ☒: Limitations in this operating permit for the reissuance of this permit conform to the anti-backsliding provisions of Section 402(o) of the Clean Water Act, and 40 CFR Part 122.44.The effluent limits for the stormwater outfalls were adjusted to reflect the establishment of best management practices during the previous permit cycle. Monitoring was reduced on Outfall 003-006 from quarterly to twice per year and benchmarks were established. The reduction in sampling for stormwater outfalls is based on the previous establishment of best management practices onsite and review of the discharge monitoring reports submitted.

ANTIDEGRADATION:
In accordance with Missouri's Water Quality Standard [10 CSR 20-7.031(2)], the department is to document by means of Antidegradation Review that the use of a water body's available assimilative capacity is justified. Degradation is justified by documenting the socio-economic importance of a discharging activity after determining the necessity of the discharge.

Not Applicable ☒: Renewal no degradation proposed and no further review necessary. Prior to modifying this permit to reflect the addition of the utility waste landfill or the addition of scrubbers, an Antidegradation review and public notice will be required. The establishment of the emergency spillway, Outfall 009, does not require an Antidegradation Review as it will be operated as a no discharge system.

AREA-WIDE WASTE TREATMENT MANAGEMENT & CONTINUING AUTHORITY:
As per [10 CSR 20-6.010(3)(B)], …An applicant may utilize a lower preference continuing authority by submitting, as part of the application, a statement waiving preferential status from each existing higher preference authority, providing the waiver does not conflict with any area-wide management plan approved under section 208 of the Federal Clean Water Act or any other regional sewage service and treatment plan approved for higher preference authority by the department.

BIOSOLIDS & SEWAGE SLUDGE:
Biosolids are solid materials resulting from domestic wastewater treatment that meet federal and state criteria for beneficial uses (i.e. fertilizer). Sewage sludge is solids, semi-solids, or liquid residue generated during the treatment of domestic sewage in a treatment works; including but not limited to, domestic septage; scum or solids removed in primary, secondary, or advanced wastewater treatment process; and a material derived from sewage sludge. Sewage sludge does not include ash generated during the firing of sewage sludge in a sewage sludge incinerator or grit and screening generated during preliminary treatment of domestic sewage in a treatment works. Additional information regarding biosolids and sludge is located at the following web address: http://dnr.mo.gov/env/wpp/pub/index.html, items WQ422 through WQ449.

☒ - Sludge/biosolids are removed by contract hauler or are stored in the lagoon. Labadie retains a contract hauler to take sludge to MSD Bissell Point (MO-0025178) for incineration. At Labadie, there is storage capacity for 8,500 gallons, which is about 138 days. Design sludge production is for 0.85 dry tons per year.

COAL COMBUSTION RESIDUALS (CCR):
Coal Combustion Residuals (CCR), often referred to as coal ash, are currently considered solid waste, not hazardous waste, under an amendment to RCRA, the Resource Conservation and Recovery Act. Coal ash is residue from the combustion of coal in power plants

DRAFT

and that was captured by pollution control technologies, like precipitators or scrubbers. Potential environmental concerns from coal ash pertain to pollution from impoundments and landfills leaching into groundwater and structural failures of impoundments.

The US EPA is currently proposing the first-ever national rules to ensure the safe disposal and management of coal ash from coal-fired power plants under the nation's primary law for regulating solid waste, the RCRA. EPA made the pre-publication version of the final rule available on December 19, 2014. http://www2.epa.gov/coalash/coal-ash-rule. The department is currently reviewing the rule.

The Labadie Energy Center has two ash ponds: (1) the original ash pond, also called bottom ash pond; and (2) a lined fly ash pond. The bottom ash pond was constructed at the beginning of plant operation in 1970 and does not contain a liner. It has a surface area of 154 acres, with a total storage capacity of 12,000 acre-ft and the current volume of stored ash is approximately 11,403 acre-ft. The fly ash pond is lined and was constructed in 1993. Its total surface area is 79 acres, with a total storage capacity of 1,900 acre-ft and the current volume of stored ash is approximately 1,353 acre-ft.

Based on a historic review from 2006 through 2010, Labadie generated an average of 390,000 tons of fly ash and 166,000 tons of bottom ash yearly. Bottom ash is wet sluiced to the old ash pond where it is reclaimed for beneficial reuse. Beneficial reuse averages 70,000 tons per year, but can vary greatly, as seen in 2006 when 600,000 tons were used. Beneficial reuses of bottom ash include use as a highway traction enhancement material, and as an aggregate replacement in commercial dry-concrete product. Ameren has a contract with Charah, a firm, to market bottom ash and manage ponded material sizing, sorting, removal and transport off-site. Bottom ash is supplied to the Quikrete Plant (MO-G491128) adjacent to Labadie.

Fly ash is conveyed by a dry handling system to a series of silos, operated by the ash marketing firm Mineral Resource Technologies (MRT), from which it can be pneumatically transferred into trucks and railcars for transport off-site. Ash is also transferred from silos operated by Ameren, for placement into the fly ash pond after wetting for stabilization. Dry fly ash from Labadie is utilized primarily as a feedstock in ready-mix concrete production. It can also be used for flowable fill, soil stabilization, and as a road base material. Ameren reports that over 50% of the fly ash produced annually is managed by MRT and transferred offsite, with the remaining balance deposited into the fly ash pond.

This operating permit contains a special condition to address concerns regarding ash ponds at this facility and their potential to impact groundwater. Missouri Water Quality Standard 10 CSR 20-7.031(5)(A) states, "*Water contaminants shall not cause or contribute to exceedances of Table A, groundwater limits in aquifers and caves...*" and 10 CSR 20-7.015(7) states, "*No person shall release any water into aquifers, store or dispose of water in a way which causes or permits it to enter aquifers either directly or indirectly unless it meets the requirements of section (9) of this rule and it meets the appropriate groundwater protection criteria set in 10 CSR 20-7.031.*" The established special condition will allow the department to (1) determine if groundwater is being impacted from either the lined or unlined coal ash impoundments, (2) establish controls, limits, management strategies, and/or groundwater cleanup criteria.

DRAFT

VISUAL INSPECTION OF THE AMEREN MISSOURI LABADIE POWER PLANT FLY ASH AND BOTTOM ASH IMPOUNDMENT DAM

By Robert Clay and Paul Simon of Missouri Dam and Reservoir Safety Program staff

On February 22, 2012, Robert Clay and Paul Simon of the Missouri Dam and Reservoir Safety Program staff inspected the embankments that impound fly ash and bottom ash at the Labadie Power Plant. The plant is owned and operated by Ameren Missouri Corporation. We were accompanied by Mr. Tom Siegel of the St. Louis regional office of the department of Natural Resources and several representatives of Ameren, Including Mr. Matt Frerking of Ameren's dam safety program.

The purpose of the inspection was to identify observable defects or maintenance deficiencies on the embankment structures and appurtenant works. The dam consists of an earthfill embankment extending from the northeast corner of the plant site and ending near the southwest corner of the coal stockpile area. There is an interior dike which splits the impoundment into two cells, one which contains fly ash and the other bottom ash. The maximum height of the dam crest above the surrounding floodplain is 29 feet. The fly ash cell is equipped with a plastic liner. The ash is transported to the ponds in slurry form. Excess water from the fly ash pond is pumped into the bottom ash pond through two- 8-inch diameter pipes. The pumps are activated automatically when the water level reaches a pre-set elevation. Excess water from the bottom ash pond exits the structure through a 36-inch diameter pipe via gravity flow. Flow through this pipe can be controlled by operation of two butterfly valves located near the pipe outlet.

The embankment was inspected by driving the crest and toe of the embankment in all terrain utility vehicles, with stops at several areas of interest, including both outlet structures and several wet areas along the toe of the embankment. The embankment appeared to be well maintained, with frequent mowing and removal of brushy vegetation, as needed. According to Mr. Frerking, the embankment is being mowed three times yearly. This frequency of mowing is adequate for an impoundment embankment. Several wet zones were observed along the toe of the embankment. Some of these areas appear to be permanently wet as indicated by the presence of water tolerant vegetation such as cattails and Horsetail reed. Most of the wet areas had no flow and were characterized by standing water or damp soil. The exception was an area along the west side of the bottom ash cell, where flowing seepage has historically been observed. Ameren has recently constructed a slurry cutoff wall along this side of the embankment. The cutoff has been successful in reducing the observed flow considerably. On the day of the inspection, the cumulative flow is negligible. Standard protocol on impoundment dams is to observe wet areas on a regular schedule for increases in flow, changes in clarity or color, and changes in the areal extent of the wetness. If such changes are noted, an investigation of the cause should be made by qualified engineers who are experienced in dam construction and operation.

The embankment appeared to be stable, with no scarps, bulges, cracks, depressions or other indications of land sliding, erosion or settlement. The west embankment had minor surface irregularities which may have been caused by recent clearing of trees and brush from the area. A few groundhog burrows were also observed in this area. The embankment is extremely wide at this point and the burrows are not a threat to the integrity of the dam, but the groundhogs should be trapped and removed and the burrows repaired. Small burrows were noted elsewhere, but these appeared to be moles and small rodents and pose no threat to the embankment.

Both outlet structures were observed. They appear to be in good condition and operating properly. Both structures are controlled spillways, which are operated automatically, meaning there is no human operator. This embankment is under 35 feet high and therefore not regulated under state dam safety statute. Regulated dams are required to have uncontrolled spillways that are adequate to protect the embankment from overtopping during extreme floods. The embankments at the Labadie fly ash ponds do not have nor are required to have an uncontrolled spillway.

In summary, it is our opinion that the Labadie ash pond dam is in good condition and is performing adequately. Ameren has a full time dam safety program and conducts regular inspections of the dam. In addition, the plant is staffed 24 hours per day, and plant personnel perform weekly inspections of the embankments and appurtenant structures. We believe that there are no deficiencies that currently threaten the integrity of the dam. However, we would recommend that Ameren consider constructing an uncontrolled spillway to allow for the safe discharge of flood waters should the controlled spillways fail to operate.

COMPLIANCE AND ENFORCEMENT:

Enforcement is the action taken by the Water Protection Program (WPP) to bring an entity into compliance with the Missouri Clean Water Law, its implementing regulations, and/or any terms and conditions of an operating permit. The primary purpose of the enforcement activity in the WPP is to resolve violations and return the entity to compliance.

Not Applicable ☒: The permittee/facility is not currently under Water Protection Program enforcement action. The most recent inspection was completed by the St. Louis Regional Office on December 11, 2012. The facility was found to be in compliance.

DRAFT

EFFLUENT LIMIT GUIDELINES:

The EPA in 2009 published the "Steam Electrical Power Generating Point Source Category: Final Detailed Study Report (2009 Final Report). The 2009 Final Report summarizes data collected and analyzed from the EPA to review discharges from steam electrical power generating industry and to determine whether the current effluent guidelines (ELGs) for this industry should be revised. From the 2009 Final Report, it determined a need existed to update the current effluent regulations specific to Steam Electrical Power Generating Point Sources [40 CFR Part 423]. The 2009 Final Report also concluded the last updated version of this 1982 regulation does not adequately address the pollutants being discharged and has not kept pace with changes that have occurred in the power industry. EPA published a draft rule for comment in 2013. EPA has indicated that it will be finalized in September 2015.

FLUE GAS DESULFURIZATION:

Ameren does not currently use flue gas desulfurization to meet Clean Air requirements at Labadie. If Ameren decides to install scrubbers to meet Clean Air Act requirements, the facility will need to submit an antidegradation request, along with a permit modification to this permit. Flue gas desulfurization can introduce new pollutants of concern into the wastewater streams. The permit modification will reflect the change in flows and the change in water characteristics in the plant. The revised effluent limit guideline EPA is developing is expected to address waste streams associated with air control technologies, including flue gas desulfurization.

GROUNDWATER MONITORING IN CONJUNCTION WITH SOLID WASTE MANAGEMENT PROGRAM

Ameren has started collecting background or baseline water quality data for the proposed Utility Waste Landfill. Ameren will be working with the Missouri Geological Survey to establish wells in the area of the proposed landfill and to develop their statistical package for Solid Waste. Any data collected through the Solid Waste landfill permitting process will be reviewed by the department. Groundwater monitoring under this permit is being established around the existing ash ponds.

GROUNDWATER MONITORING:

A groundwater monitoring plan is required to be developed and implemented to examine potential discharges to groundwater from the existing ash ponds. Ameren- Labadie sampled upgradient of the ash ponds in April 2012 to address concerns by the public about well contamination on the properties closest to Ameren's property line. In this permit renewal, Ameren is being required to work with the Missouri Geological Survey to establish a groundwater monitoring program that characterizes groundwater movement at Labadie and determines the proper location and installation of monitoring wells to fully characterize the ash ponds. Monitoring will occur upgradient and downgradient of the ash ponds in multiple locations. As part of the groundwater characterization plan, the department will work with Ameren on establishing the parameters to be monitored. Parameters for consideration in the development of the monitoring plan may be based on EPA's *Characterization of Coal Combustion Residues from Electric Utilities – Leaching and Characterization Data*, and 40 CFR 257 Appendix I (MCLs for drinking water), Appendix III (Constituents for Detection Monitoring), and Appendix IV (Constituents for Assessment Monitoring, 40 CFR 265 Appendix III (MCLs for drinking water) and Appendix IV (statistical tests), and Solid Waste Management Program's utility waste landfill monitoring requirements. Missouri's utility waste landfill monitoring requirements can be found at 10 CSR 80-11.010, Appendix I.

Aluminum	Chloride	Lithium	Selenium	Chemical Oxygen Demand
Antimony	Chromium III	Manganese	Silver	Hardness, as $CaCo_3$
Arsenic	Chromium VI	Mercury	Sodium	Specific Conductance
Barium	Cobalt	Molybdenum	Sulfate, as SO_4	Total Dissolved Solids
Beryllium	Copper	Nickel	Sulfide	Total Organic Carbon
Boron	Fluoride	pH	Thallium	Total Organic Halogens
Cadmium	Iron	Radium 226	Zinc	
Calcium	Lead	Radium 228		

INTAKE WATER CREDITS (NET LIMITS):

In accordance with federal regulation 40 CFR 122.45(g), technology-based effluent limitations or standards shall be adjusted to reflect credit for pollutants in the discharge's intake water if: (1) The applicable effluent limitations and standards contained in 40 CFR subchapter N specifically provide that they shall be applied on a net basis; or (2) The discharger demonstrates that the control system it proposes or uses to meet applicable technology-based limitations and standards would, if properly installed and operated, meet the limitations and standards in the absence of pollutants in the intake waters. Additionally, credit for conventional pollutants such as biochemical oxygen demand (BOD) or total suspended solids (TSS) should not be granted unless the permittee demonstrates that the constituents of the generic measure in the effluent are substantially similar to the constituents of the generic measure in the intake water or unless appropriate additional limits are placed on process water pollutants either at the outfall or elsewhere. Credit shall be granted only to the extent necessary to meet the applicable limitation or standard, up to a maximum value equal to the influent value.

DRAFT

Additional monitoring may be necessary to determine eligibility for credits and compliance with permit limits. Credit (Net Limits) do not apply to the discharge of raw water clarifier sludge generated from the treatment of intake water.

Applicable ☒: Ameren Labadie employs intake water credits for Outfalls #002 and #009. Outfall #002 is the ash pond which receives water from the Missouri River intake. Net limit and intake water credit applicable to Labadie is total suspended solids. Outfall 009 is the emergency spillway from the ash ponds. See discussion in Appendix B: TBEL determination for additional information on intake water credits.

The majority of the water through Outfall #002 is eligible for the intake credits; however Ameren does receive some water from wells onsite or from stormwater into the ash ponds and ultimate discharge through #002. To account for the water received that is not from the Missouri River, Ameren plans to calculate the required influent flow, "Qr" by multiplying the estimated discharge flow "Qd", based on the water balance diagram in Appendix B by 0.95

$$[(Q_d \times 8.34 \times C_d) - (Q_r \times 8.34 \times C_r)] / (Q_d \times 8.34) = \text{TSS Net in mg/L}$$

Where:
Q_d = Flow from Outfall #002 or #009 (in MGD).
C_d = Concentration in TSS measure in the final effluent from Outfall #002 or #009 (in mg/L);
Q_r = Intake flow (in MGD) that flows to either Outfall #002 or #009
C_r = Intake flow TSS concentration (in mg/L).

REASONABLE POTENTIAL ANALYSIS (RPA):
Federal regulation [40 CFR Part 122.44(d)(1)(i)] requires effluent limitations for all pollutants that are or may be discharged at a level that will cause or have the reasonable potential to cause or contribute to an in-stream excursion above narrative or numeric water quality standard. In accordance with [40 CFR Part 122.44(d)(iii)] if the permit writer determines that any given pollutant has the reasonable potential to cause, or contribute to an in-stream excursion above the WQS, the permit must contain effluent limits for that pollutant.

Chlorination for Outfall #001
Chlorination (Free Available and/or Total Recoverable) as established in 40 CFR 423.12 and 423.13 is not applicable to this facility for once through cooling water due to the fact that this facility does not chlorinate. Additionally, WET testing as a schedule condition will not be applied to this facility due to the fact that they do not use pesticides for organisms (e.g., zebra mussels) that obstruct their intake structure. Please see Outfall #001 for a more detailed description of WET testing conditions.

Sulfate for Outfall #002
Previous permit required quarterly sulfate monitoring. Missouri has proposed a new water quality standard for sulfate that is dependent on the stream hardness and on the chloride concentration. Reasonable potential will be reevaluated upon renewal. The permit includes quarterly monitoring for chlorides and stream hardness. Monitoring frequency remains the same.

Metals –Boron for Outfall #002.
In evaluating the expanded test results for Outfall 002 and comparing with the background concentration and the technology based effluent limit determination, monitoring only is being required for this permit. The water quality based standard for boron is 2. 0 mg/L, as the drinking water standard.

Whole Effluent Toxicity Testing – Outfall #002
Staff drafting this operating permit has reviewed the renewal application and other appropriate sources regarding establishing a WET test for Outfall #002. Staff drafting this operating permit has determined that the WET testing conducted on Outfall #002 is a representative sample. Previous permits included the single dilution method, this permit requires the multiple dilution method. See WET test subsection for more information on WET testing.

REMOVAL EFFICIENCY:
Removal efficiency is a method by which the Federal Regulations define Secondary Treatment and Equivalent to Secondary Treatment, which applies to Biochemical Oxygen Demand 5-day (BOD_5) and Total Suspended Solids (TSS) for Publicly Owned Treatment Works (POTWs)/municipals.

Not Applicable ☒: Influent monitoring is not being required to determine percent removal. Outfall 002 and 009 are eligible for Intake Water Credits; please see Intake Water Credit discussion above.

SANITARY SEWER OVERFLOWS (SSO) AND INFLOW AND INFILTRATION (I&I):

DRAFT

Sanitary Sewer Overflows (SSOs) are defined as an untreated or partially treated sewage release are considered bypassing under state regulation [10 CSR 20-2.010(11)] and should not be confused with the federal definition of bypass. SSO's have a variety of causes including blockages, line breaks, and sewer defects that allow excess storm water and ground water to (1) enter and overload the collection system, and (2) overload the treatment facility. Additionally, SSO's can be also be caused by lapses in sewer system operation and maintenance, inadequate sewer design and construction, power failures, and vandalism. SSOs also include overflows out of manholes and onto city streets, sidewalks, and other terrestrial locations. Additionally, Missouri RSMo §644.026.1 mandates that the department require proper maintenance and operation of treatment facilities and sewer systems and proper disposal of residual waste from all such facilities.

Not applicable ☒: This facility is not required to develop or implement a program for maintenance and repair of the collection system; however, it is a violation of Missouri State Environmental Laws and Regulations to allow untreated wastewater to discharge to waters of the state.

SCHEDULE OF COMPLIANCE (SOC):

A schedule of remedial measures included in a permit, including an enforceable sequence of interim requirements (actions, operations, or milestone events) leading to compliance with the Missouri Clean Water Law, its implementing regulations, and/or the terms and conditions of an operating permit.

Applicable ☒: The time given for effluent limitations of this permit listed under Interim Effluent Limitation and Final Effluent Limitations were established in accordance with [10 CSR 20-7.031(10)]. For Outfall 02A, Labadie has a schedule of compliance for the installation of disinfection equipment as soon as possible, but no later than two years from the effective date of this permit. Other schedules of compliance in the permit are for establishment of a groundwater monitoring plan, reestablishment of a biomonitoring program, and for upgrades to the intake structure. For more information on the schedules of compliance, please see discussion under groundwater monitoring, 316(a) and 316(b). The timeline for compliance with the thermal effluent limits is to coincide with the requirements under 316(b) to meet entrainment and impingement regulations. The department believes it is impractical to set conflicting schedules of compliance that may force an upgrade without solving the multiple environmental concerns at the facility, when there are multiple studies and evaluations of technologies being required during this permit cycle.

SEEPS PREVIOUSLY IDENTIFIED IN THE 1992 RENEWAL APPLICATION:

According to Ameren, the original 30 gpm seep reported in the 1992 renewal application at the south corner of the bottom ash pond ceased to exist when Ameren filled the area in due to an anticipated ash reuse project that never materialized in 2008. A small seep in the vicinity of the 24 inch discharge pipe of outfall 002 that travels through the berm wall of the bottom ash pond. To correct and eliminate the seeps, Ameren placed an anti-seep collar around the outfall 002 discharge pipe on the western side of the pond berm to address the seepage occurring below the pipe. The majority of excavation to install the anti-seep collar was dry and the soil above the pipe consisted of clay/sand fill material. Approximately 12 inches of gravel and sand bedding material was encountered below the pipe. This material was found to be saturated and it is likely that the seepage originated from this layer. An approximate seven foot long plug of soil mixed with bentonite was placed below the pipe and used to backfill the excavation above the pipe.

On the southwest portion of the old ash pond, two seeps were occurring, one very small with an unknown discharge rate and the other seep was discharging about 30 gpm, according to Ameren. The effluent from both seeps was discharging to a wetlands area on Ameren property and isolated from the Missouri River except during flood conditions. To eliminate the seeps, a soil-bentonite slurry wall was installed within the berm, along the southwest portion of the old ash pond. The wall was initially designed to be 500 feet in length and 30 feet deep. It was constructed by excavating a bentonite slurry into the trench to prevent caving. The trench was then backfilled with a soil and bentonite mixture. While excavating the trench, a broken rock layer was encountered that continued beyond the planned southern end of the trench. The trench length was extended an additional ninety feet to avoid terminating the slurry wall in the permeable broken rock material.

The picture below was provided by Ameren to show the locations of the seeps, prior to being fixed.

DRAFT

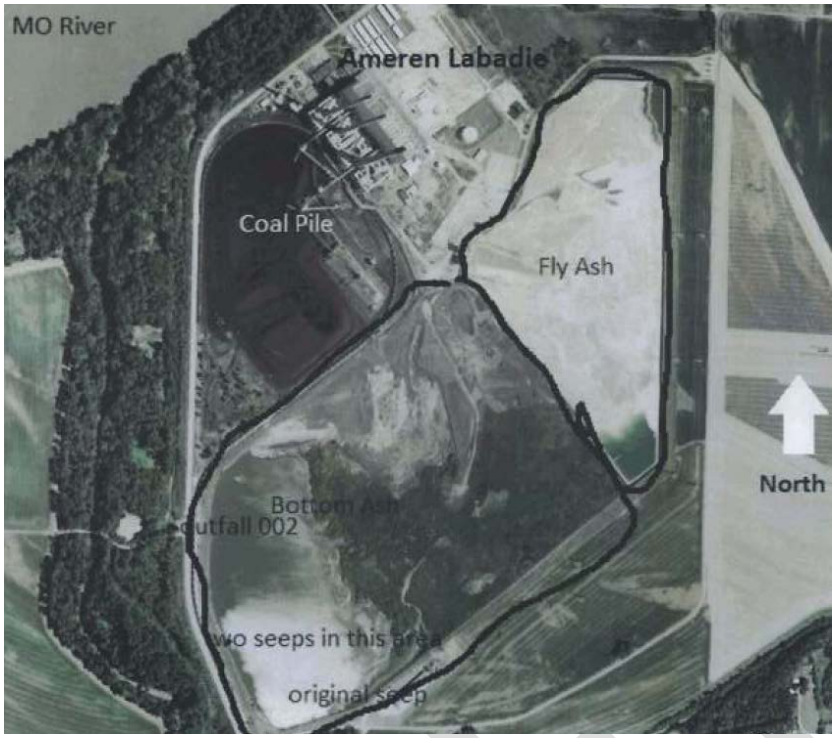

STORM WATER POLLUTION PREVENTION PLAN (SWPPP):
In accordance with 40 CFR 122.44(k) *Best Management Practices (BMPs)* to control or abate the discharge of pollutants when: (1) Authorized under section 304(e) of the Clean Water Act (CWA) for the control of toxic pollutants and hazardous substances from ancillary industrial activities: (2) Authorized under section 402(p) of the CWA for the control of storm water discharges; (3) Numeric effluent limitations are infeasible; or (4) the practices are reasonably necessary to achieve effluent limitations and standards or to carry out the purposes and intent of the CWA.

In accordance with the EPA's *Developing Your Stormwater Pollution Prevention Plan, A Guide for Industrial Operators*, (Document number EPA 833-B-09-002) [published by the United States Environmental Protection Agency (USEPA) in February 2009], BMPs are measures or practices used to reduce the amount of pollution entering (regarding this operating permit) waters of the state. BMPs may take the form of a process, activity, or physical structure. Additionally in accordance with the Storm Water Management, a SWPPP is a series of steps and activities to (1) identify sources of pollution or contamination, and (2) select and carry out actions which prevent or control the pollution of storm water discharges.

Applicable ☒: A SWPPP shall be developed and implemented for each site and shall incorporate required practices identified by the department with jurisdiction, incorporate erosion control practices specific to site conditions, and provide for maintenance and adherence to the plan. As Labadie is a large industrial site, in the development of the SWPPP, they may want to use the draft SWPPP template provided by EPA and consult the Industrial Stormwater Fact Sheets developed by EPA (http://cfpub.epa.gov/npdes/stormwater/swsectors.cfm) to ensure the SWPPP is as comprehensive as possible. Fact sheets of interest may include the Sector O: Steam Electric Power Generating Facilities, Including Coal Handling Areas, Sector H: Coal Mines and Coal Mining-Related Facilities and Sector P: Motor Freight Transportation Facilities, and Rail Transportation Facilities. The fact sheets provide further references and resources for developing the SWPPP.

VARIANCE:
As per the Missouri Clean Water Law § 644.061.4, variances shall be granted for such period of time and under such terms and conditions as shall be specified by the commission in its order. The variance may be extended by affirmative action of the commission. In no event shall the variance be granted for a period of time greater than is reasonably necessary for complying with the Missouri Clean Water Law §§644.006 to 644.141 or any standard, rule or regulation promulgated pursuant to Missouri Clean Water Law §§644.006 to 644.141.

Not Applicable ☒: This operating permit is not drafted under premises of a petition for variance. For 316(a) thermal discharge variance discussion, please see 316(a) section below.

UTILITY WASTE LANDFILL:
Ameren Labadie submitted their construction permit application to the department's Solid Waste Management Program and to Franklin County for approval. The department received their construction permit application on January 29, 2013 and is in the process of reviewing the application. Ameren also filed with the Public Service Commission requesting permission to build the utility waste landfill. Under the Franklin County Landfill ordinances passed in 2011, Ameren had to submit the application to an independent engineer for review and approval also. Franklin County's planning and zoning ordinances are available online. Article 10, Supplementary Use Regulations, deals with utility waste landfills.
(http://www.franklinmo.org/Public%20Works/Planning%20and%20Zoning/Unified_Land_Use/Unified_Land_Use_Regulations.htm)

Utility waste landfill construction is covered under in 10 CSR80-11, Utility Waste Landfills. Prior to submittal of the construction permit, Ameren worked with the Missouri Geological Survey and Solid Waste Management Program on a detailed site investigation (DSI). The DSI is available on Ameren's website, (http://www.ameren.com/sites/aue/source/AboutUs/Pages/LabadieLandfill.aspx). Ameren has completed three groundwater sampling events at the proposed utility waste landfill. The facility has installed twenty-nine (29) monitoring wells.

In discussions with Ameren, the stormwater retention basins and leachate collection system are not expected to discharge or contribute pollutants during this permit cycle. However, prior to routing flows to a discharge, Ameren will submit an antidegradation request and permit modification for the addition of the landfill to the NPDES permit. Ameren's initial plans will include a wastewater collection system and transfer ponds to be constructed to receive stormwater runoff from the landfill cells and leachate collection system. The department will be public notice the modified permit and antidegradation report with the proposed changes.

WASTELOAD ALLOCATIONS (WLA) FOR LIMITS:
As per [10 CSR 20-2.010(78)], the amount of pollutant each discharger is allowed by the department to release into a given stream after the department has determined total amount of pollutant that may be discharged into that stream without endangering its water quality.

Applicable ☒: Wasteload allocations were calculated where applicable using water quality criteria or water quality model results and the dilution equation below:

$$C = \frac{(C_s \times Q_s) + (C_e \times Q_e)}{(Q_e + Q_s)}$$ (EPA/505/2-90-001, Section 4.5.5)

Where C = downstream concentration
C_s = upstream concentration
Q_s = upstream flow
C_e = effluent concentration
Q_e = effluent flow

Chronic wasteload allocations were determined using applicable chronic water quality criteria (CCC: criteria continuous concentration) and stream volume of flow at the edge of the mixing zone (MZ). Acute wasteload allocations were determined using applicable water quality criteria (CMC: criteria maximum concentration) and stream volume of flow at the edge of the zone of initial dilution (ZID). Water quality based maximum daily and average monthly effluent limitations were calculated using methods and procedures outlined in USEPA's "Technical Support Document For Water Quality-based Toxics Control" (EPA/505/2-90-001).

Number of Samples "n":
Additionally, in accordance with the TSD for water quality-based permitting, effluent quality is determined by the underlying distribution of daily values, which is determined by the Long Term Average (LTA) associated with a particular Wasteload Allocation (WLA) and by the Coefficient of Variation (CV) of the effluent concentrations. Increasing or decreasing the monitoring frequency does not affect this underlying distribution or treatment performance, which should be, at a minimum, be targeted to comply with the values dictated by the WLA. Therefore, it is recommended that the actual planned frequency of monitoring normally be used to determine the value of "n" for calculating the AML. However, in situations where monitoring frequency is once per month or less, a higher value for "n" must be assumed for AML derivation purposes. Thus, the statistical procedure being employed using an assumed number of samples is "n = 4" at a minimum. For Total Ammonia as Nitrogen, "n = 30" is used.

WLA MODELING:
There are two general types of effluent limitations, technology-based effluent limits (TBELs) and water quality based effluent limits (WQBELs). If TBELs do not provide adequate protection for the receiving waters, then WQBEL must be used.

DRAFT

WATER QUALITY STANDARDS:
Per [10 CSR 20-7.031(3)], General Criteria shall be applicable to all waters of the state at all times including mixing zones. Additionally, [40 CFR 122.44(d)(1)] directs the department to establish in each NPDES permit to include conditions to achieve water quality established under Section 303 of the Clean Water Act, including State narrative criteria for water quality.

WHOLE EFFLUENT TOXICITY (WET) TEST:
A WET test is a quantifiable method of determining if a discharge from a facility may be causing toxicity to aquatic life by itself, in combination with or through synergistic responses when mixed with receiving stream water.

Applicable ☒: Under the federal Clean Water Act (CWA) §101(a)(3), requiring WET testing is reasonably appropriate for site-specific Missouri State Operating Permits for discharges to waters of the state issued under the National Pollutant Discharge Elimination System (NPDES). WET testing is also required by 40 CFR 122.44(d)(1). WET testing ensures that the provisions in the 10 CSR 20-6.010(8)(A)7. and the Water Quality Standards 10 CSR 20-7.031(3)(D),(F),(G),(I)2.A & B are being met. Under [10 CSR 20-6.010(8)(A)4], the department may require other terms and conditions that it deems necessary to assure compliance with the Clean Water Act and related regulations of the Missouri Clean Water Commission. In addition the following MCWL apply: §§§644.051.3 requires the department to set permit conditions that comply with the MCWL and CWA; 644.051.4 specifically references toxicity as an item we must consider in writing permits (along with water quality-based effluent limits, pretreatment, etc…); and 644.051.5 is the basic authority to require testing conditions. WET test will be required by <u>all</u> facilities meeting the following criteria:

☒ Facility is a designated Major.
☒ Facility handles large quantities of toxic substances, or substances that are toxic in large amounts.

- Outfall 001 has an unscheduled WET test required when the facility uses a molluscicide or other toxic pollutants to remove organisms from intake structures. If molluscicide is used to removed organisms from the intake structure, an annual WET test is required
- Outfall 002 retains annual WET testing, however instead of grab, single dilution previously required, this permit requires a multiple dilution, grab test.
- Outfall 02A does not have a WET test. A WET test was not established for this outfall, as the flows from the activated sludge plant are routed to go through the ash pond, Outfall 002, prior to discharge. Following the permit manual, this outfall would have a once per permit cycle WET test; however Outfall 002 has an annual WET test, which is a more protective monitoring frequency.

40 CFR 122.41(M) - BYPASSES:
The federal Clean Water Act (CWA), Section 402 prohibits wastewater dischargers from "bypassing" untreated or partially treated sewage (wastewater) beyond the headworks. A bypass, which includes blending, is defined as an intentional diversion of waste streams from any portion of a treatment facility, [40 CFR 122.41(m)(1)(i)]. Additionally, Missouri regulation 10 CSR 20-2.010(11) defines a bypass as the diversion of wastewater from any portion of wastewater treatment facility or sewer system to waters of the state. Only under exceptional and specified limitations do the federal regulations allow for a facility to bypass some or all of the flow from its treatment process. Bypasses are prohibited by the CWA unless a permittee can meet all of the criteria listed in 40 CFR 122.41(m)(4)(i)(A), (B), & (C). Any bypasses from this facility are subject to the reporting required in 40 CFR 122.41(l)(6) and per Missouri's Standard Conditions I, Section B, part 2.b. Additionally, Anticipated Bypasses include bypasses from peak flow basins or similar devices designed for peak wet weather flows.

Not Applicable ☒: This facility does not bypass.

303(d) LIST & TOTAL MAXIMUM DAILY LOAD (TMDL):
Section 303(d) of the federal Clean Water Act requires that each state identify waters that are not meeting water quality standards and for which adequate water pollution controls have not been required. Water quality standards protect such beneficial uses of water as whole body contact (such as swimming), maintaining fish and other aquatic life, and providing drinking water for people, livestock and wildlife. The 303(d) list helps state and federal agencies keep track of waters that are impaired but not addressed by normal water pollution control programs. A TMDL is a calculation of the maximum amount of a given pollutant that a body of water can absorb before its water quality is affected. If a water body is determined to be impaired as listed on the 303(d) list, then a watershed management plan will be developed that shall include the TMDL calculation

Applicable ☒: The Missouri River is listed on the 2012 Missouri 303(d) List for bacteria.
☒: This facility is considered to be a source of or has the potential to contribute to the above listed pollutant(s). As parts of this permit renewal, Ameren Labadie is required to install ultraviolet disinfection on Outfall 02A within two years of permit issuance.

DRAFT

TEMPERATURE LIMITS CONSIDERATIONS:
Missouri's Water Quality Standards establish Temperature Criteria that provide several forms of protection from the impacts of heat energy on receiving water bodies. The purpose of the Temperature Limit Guidance is to provide an approach to help both permit writers and the public understand the Temperature Criteria and how temperature requirements are applied in Missouri State Operating Permits. This approach assumes that the receiving water consumes 100% of the heat energy being discharged. At any time the permittee has reason to believe the discharge may exceed their permit temperature limits or if the permittee does exceed their permit limit, the permittee may determine it necessary to take action that may include, but is not limited to, seeking a 316(a) Variance, a Mixing Zone Study, or conducting a "Heat Model". If action is taken by the permittee that warrants a modification to this operating permit, then the permittee will need to submit an application for a permit modification. Submitting an application for permit modification does not guarantee approval of said action and does not directly indicate that the result of said action will be implemented into an operating permit. A Quality Assurance Project Plan (QAPP) must be submitted for any alternative compliance approach.

Ameren Missouri has indicated a preference for retaining effluent limitations in the form of thermal discharge effluent limits (btu/hr) from the previous operating permit for the Labadie Energy Center. They indicate that these limitations are protective of Water Quality Standards on the Missouri River. The original 316(a) demonstration resulted in a 316(a) variance, which was approved in 1977. The 316(a) variance removed the permit schedule of compliance requiring off-stream cooling and applied, instead, alternative heat rejection limits based on power generation. The thermal discharge limits were increased in 1992 from 10.63 $x10^9$ btus/hr to 11.16 x 10^9 btus/hr. The permit reestablishes the 11.16 $x10^9$ btus/hr thermal discharge limit on Outfall 001; however monitoring is required of the stream and the effluent temperature and flow to be used in conjunction with the studies Ameren will be conducting to establish the appropriate temperature and/or mixing zones for the Labadie Energy Center.

316(a) THERMAL VARIANCE
Section 316(a) of the Clean Water Act (CWA) applies to point sources with thermal discharges. It authorizes the NPDES permitting authority to impose alternative effluent limitations for the control of the thermal component of a discharge in lieu of the effluent limits that would otherwise be required under section 301 or 306 of the CWA.

Regulations implementing section 316(a) are codified at 40 CFR Part 125, subpart H. These regulations identify the criteria and process for determining whether an alternative effluent limitation (i.e., thermal variance from the otherwise applicable effluent limit) may be included in a permit. This means that before a thermal variance can be granted, 40 CFR Parts 125.72 and 125.73 require the permittee to demonstrate that the protection and propagation of the waterbody's balanced, indigenous population (BIP) of shellfish, fish, and wildlife is being attained.

The burden of proof is on the permittee to demonstrate that it is eligible to receive an alternative thermal effluent limit under section 316(a). This means the permittee must demonstrate to the department that a thermal effluent limit necessary to meet the requirements of sections 301 or 306, specifically 10 CSR 20-7.031(4)(D)1 and 10 CSR 20-7.031(4)(D)5, is more stringent than necessary to assure the protection and propagation of a BIP in and on the body of water into which the discharge is made.

Applicable☒: Ameren Labadie is currently operating under a 316(a) variance and has requested the variance to be regranted. The original variance was granted in 1977. 40 C.F.R. § 125.73(c)(1) addresses how existing sources may make a demonstration for a 316(a) variance based on the "absence of prior appreciable harm. Specifically, subpart (c)(1) states that such a demonstration shall show:

(i) That no appreciable harm has resulted from the normal component of the discharge taking into account the interaction of such thermal component with other pollutants and the additive effect of other thermal sources to a balanced, indigenous community of shellfish, fish and wildlife in and on the body of water into which the discharge has been made; or

(ii) That despite the occurrence of such previous harm, the desired alternative effluent limitations (or appropriate modifications thereof) will nevertheless assure the protection and propagation of a balanced, indigenous community of shellfish, fish and wildlife in and on the body of water into which the discharge is made."

The term "appreciable harm" is not defined in the regulations; however, the burden of proof is on the permittee to make a demonstration that assures that the BIP will be maintained. The following criteria are indicators of the occurrence of "appreciable harm":

1. Substantial increase in abundance or distribution of any nuisance species or heat-tolerant community not representative of the highest community development achievable in receiving waters of comparable quality.
2. Substantial decrease of formerly indigenous species, other than nuisance species.
3. Changes in community structure to resemble a simpler successional stage than is natural for the locality and season in question.
4. Unaesthetic appearance, odor, or taste of the waters.
5. Elimination of an established or potential economic or recreational use of the waters.
6. Reduction of the successful completion of life cycles of indigenous species, including those of migratory species.

DRAFT

7. Substantial reduction of community heterogeneity or trophic structure.

The department reevaluated the data previously submitted by Ameren from 1980-1985 and 1996-2001, along with data collected by Missouri Department of Conservation and US Fish and Wildlife. Before deciding to regrant the variance, the department discussed the existing studies and data available with Missouri Department of Conservation and EPA on their thoughts and concerns. The data available does not present convincing evidence of greater numbers of fish upstream of the Labadie plant than downstream.

The department has decided to regrant the 316(a) variance thermal limits as **interim effluent limits** since operations and generating capacity have not changed significantly since the variance was granted. The previous permit's required compliance with a thermal discharge effluent limit, not a temperature effluent limit, consistent with the approved 316(a) variance. Ameren has indicated a preference for retaining effluent limitations in thermal discharge effluent limits (btu/hr) from the previous operating permit. This permit does maintain the 11.16 $x10^9$ btus/hr thermal discharge limit on Outfall 001 previously granted with the approval of the 316(a) variance; however monitoring is required of the stream and the effluent temperature and flow to be used in conjunction with the biological studies to establish the appropriate temperature and/or mixing zones for the Labadie Energy Center for compliance with Missouri's water quality standards.

This permit establishes the variance effluent limits as an **interim effluent limit** and requires Ameren to develop a revised sampling plan and to reestablish sampling of aquatic communities to demonstrate there is a balanced indigenous population present and to also begin planning for any appropriate upgrades to meet the thermal effluent limits. The requirement to revise the existing sampling plan is to provide for more updated and different sampling methods, such as trolling. Also the revised sampling plan will require Ameren to evaluate the existing sampling locations, both up and downstream of the plant to ensure the best possible locations are being used for data gathering and that the habitats' up and downstream are similar to ensure the habitats' impact on the river are similar. The revised sampling plan will also need to include sampling procedures for the collection of benthic communities, macro invertebrates, and other aquatic communities of the river.

History of the 316(a) Variance at Labadie:

- Original permit issued in October 3, 1975 with temperature limit of 118°F, along with a schedule of compliance for off stream cooling by July 1, 1981. Ameren had applied for a 316(a) variance at that time and was in process of completing the study.
- Ameren conducted thermal plume studies from 1974 through 1979. Biological monitoring was completed during 1974-1975 for the 316(a) variance request.
- The permit, which established the alternate limit of 10.63 $x10^9$ btus/hr as an effluent limit and the 316(a) variance was issued July 15, 1977, following public notice March 11-April 11, 1977. The 316(a) waiver was recommended for approval by EPA on February 14, 1977. Along with the alterative effluent limit, the temperature requirement of 118° F and the special condition requiring off stream cooling was removed.
- Ameren applied for reapplication in 1980 and in 1982, with the request to retain the 316(a) variance and thermal effluent limits. Permit was reissued July 30, 1982.
- Ameren conducted additional biological monitoring upstream and downstream of the thermal discharge from 1980 through 1985.
- Permit renewed August 28, 1987 and had applied for reapplication with the request to retain the 316(a) variance and thermal effluent limits.
- With the 1992 permit renewal application, Ameren resubmitted thermal plume study information along with comparison of biomonitoring data collected by Ameren and the Missouri Department of Conservation. Ameren requested the continuation of the alternative thermal discharge effluent limits at all four plants operating at capacity. The permit was public noticed in 1993 and renewed April 1994 with a higher thermal discharge effluent limit, 11.16 $x10^9$ btus/hr.
- Ameren commented on September 29, 1992 regarding the change in thermal discharge limits. The original thermal discharge limits were based on gross electrical generation and manufacturers' design efficiencies. Ameren conducted an examination of the process and refined the calculation to more accurately reflect thermal releases, by accounting for normal turbine efficiency degradation that has always been present, but not included in the original computation. The department agreed with Ameren that the increase from 10.63 x 10^9 to 11.16 x 10^9 btus/hr was only a reporting adjustment and represented no additional heat output. Ameren stated that the heat output has been within 3% for the past 17 years (1975-1992) and would not significantly increase. Ameren submitted the Labadie Thermal Plume and Applicability of Section 316(a) with their comments.
- Ameren conducted additional biomonitoring studies from 1996 through 2001.

DRAFT

- Ameren applied for renewal in 1998 with the permit being public noticed in 1999; however the permit was not reissued.
- The department requested a revised, updated permit application in April 2011. With the revised permit application, Ameren requested the continuation of their thermal discharge limits and 316(a) variance. Data provided by Ameren, along with data from Missouri Department of Conservation and US Fish and Wildlife was compared. This permit regrants the variance as operating capacity has not significantly changed since 1977 and additional studies have not been completed.
- As part of this permit, Ameren is being required to establish a biomonitoring plan, using up to date sampling methods and techniques to verify the impacts on the aquatic communities.

If during the cycle of this operating permit the permittee determines that the **interim effluent limits** need modified, the permit contains language indicating that the permit can be reopened and modified, or alternatively revoked and reissued to: incorporate new or modified requirements applicable to implementing a revised department approved 316(a) Variance. The ten year schedule of compliance with the thermal effluent limits is to coincide with the requirements under 316(b) to meet entrainment and impingement regulations. The department believes it is impractical to set conflicting schedules of compliance that may force an upgrade without solving the multiple environmental concerns at the facility, when there are multiple studies and evaluations of technologies being required during this permit cycle.

SUMMARY OF US FISH AND WILDLIFE DATA,
by John Ford, Environmental Specialist IV, Watershed Protection Section

Upon the department's request, US Fish and Wildlife provided data on the lower Missouri River. This data was reviewed to see if there was evidence that the Labadie Energy Center was adversely affecting fish communities (number of fish species and number of individual fish) in a twenty mile segment of the Missouri River bracketing the Labadie plant. Almost none of the over 1,300 net sets appeared to be taken on the right descending bank of the river in the immediate vicinity of the power plant discharge. Thus, this data provides information on fish density and species richness in this 20 mile segment of the river but is not adequate to address questions of the fish community in the immediate vicinity (1 -2 miles) of the Labadie discharge which is at River Mile 57.6.

Table One shows the number of fish species collected in four types of sampling gear. The unadjusted data shows the actual number of species taken and the adjusted data normalizes the numbers of species to the same number of net sets (10) for each type of gear. This was done because different sections of the river received differing numbers of nets sets for given sampling dates and species collected is a logarithmic function of number of net sets. Yellow highlighted cells indicate the lowest species richness for that type of gear, while blue cells indicate the highest species richness. Overall six of the highest eight totals (three adjusted and three unadjusted) species richness values were in sections of the river upstream of the Labadie Energy Center and two (one adjusted, one unadjusted) were downstream. Three of the eight poorest species richness values were upstream of the Labadie Plant (one adjusted, two unadjusted) and five were downstream (3 adjusted, 2 unadjusted). This suggests slightly higher species richness upstream of Labadie.

Table 1. No. of Fish Taxa Collected 2003-2011 USFWS.

Gear		Habitat	Upstream of Labadie PP			Downstream of Labadie	
			River Mile				
			65-70	60-65	57.6-60	54-57	48-54
Unadjusted	Mini Fyke	Bars	10.5	15.3		14	14.5
Adjusted	Mini Fyke	Bars	14	16.1		15.5	13.6
Unadjusted	POT	Bars	12.4		8		10.9
Adjusted	POT	Bars	14.1		10.5		13.9
Unadjusted	Otter	Ch. Border	8.6		10.8	8.5	9.2
Adjusted	Otter	Ch. Border	10.3		10.3	10.6	9.7
Unadjusted	Trammel	Ch. Border	4.6		5	4	6
Adjusted	Trammel	Ch. Border	5.9		5.8	5.6	5.75

Adjusted number of species data was lumped into two location categories, above and below Labadie Energy Center, and examined statistically for each of the four gear types shown in Table One. An Anderson-Darling test for normality was first applied to the data. Most data sets appeared to be normal or nearly so. For those data sets a two-sample t test was used.

Demonstration of 316(a) Thermal Variance (continued):

When one or both data sets did not appear to be normal, either a t test on log transformed data or a non-parametric Mann Whitney median test was applied. Results of these statistical tests are shown below in Table Two.

These tests indicate that only the Mann Whitney test on Mini Fyke net data reaches the 50 percent confidence level for deciding that there is greater species richness upstream of the Labadie plant. None of the tests rise to the level of even 60 percent confidence, and for most, the level of confidence is less than 30 percent. Thus, this fish species richness data does not present convincing evidence of greater species richness upstream of the Labadie Energy Center.

Table 2 Statistical Test Results for Species Richness Above vs. Below Labadie

Results of "t" tests

Gear	Location	Test	Ln Trans?	Mean	T	Prob >t
Mini Fyke	Above	t	N	14.93		
	Below			14.03	0.51	0.624
POT	Above	t	N	13.81		
	Below			13.94	-0.11	0.916
POT	Above	t	Y	2.601		
	Below			2.616	-0.18	0.863
Otter	Above	t	N	9.12		
	Below			9.04	0.07	0.944

Results of Mann Whitney Test

Gear	Location	Test	Ln Trans?	Median	W	Prob >t
Mini Fyke	Above	MW	N	16.28		
	Below			13.91	50.5	0.465
Otter	Above	MW	N	9		
	Below			9	650.5	1
Trammel	Above	MW	N	5.59		
	Below			5.95	141	0.716

Summary data on total number of fish collected is presented in Table 3 below. For five of the six gear types, the largest average number of fish collected was upstream of Labadie and for three of the six gear types; the lowest average number of fish collected was upstream of the Labadie plant.

Table 3. Average Number of Fish Collected Per Net Set (No. of Net Sets)

	Gear Type						
River Mi.	Bag	Beam	Hoop	MiniFyke	Otter	POT	Trammel
65-70	27.7 (3)	10.8 (4)	1.5 (13)	20.4 (25)	27.5 (154)	39.0 (123)	6.1 (30)
60-65	58.4 (5)		4.7 (7)	70.7 (12)	58.5 (25)	17.5 (2)	4.4 (29)
57.6-60				18.1 (16)	9.8 (55)	13.2 (6)	3.6 (24)
54-57				59.6 (8)	14.8 (32)		5.5 (50)
48-54	17.6 (14)		5.2 (14)	43.1 (31)	30.8 (69)	1.0 (2)	4.6 (69)
47-48				22.8 (22)	21.5 (132)	31.4 (85)	3.4 (40)

Data for average number of fish collected per net set were lumped into two locations, above and below the Labadie Energy Center for each of four gear types. Data sets were tested for normality using the Anderson Darling test. None of the data sets were normally distributed but log transformation resulted in normal distributions for Mini Fyke and Otter nets which were evaluated with the two-sample t test. POT and Trammel net data were evaluated with the Mann Whitney test for medians. Test results are shown in Table Four and none of these four gear types suggests greater numbers of fish upstream of Labadie at even the 50 percent confidence level. Thus this data does not present convincing evidence of greater numbers of fish upstream of the Labadie plant than downstream.

DRAFT

Demonstration of 316(a) Thermal Variance (continued):

Table 4 Statistical Test Results for No. of Fish/Net Set Above vs. Below Labadie

Results of "t" tests

Gear	Location	Test	Ln Trans?	Mean	t	Prob >t
Mini Fyke	Above	t	Y	3.05		
	Below			3.37	-0.9	0.386
Otter	Above	t	Y	2.73		
	Below			2.69	0.18	0.86

Results of Mann Whitney Test

Gear	Location	Test	Ln Trans?	Median	W	Prob >t
POT	Above	MW	N	16.38		
	Below			21.5	283	0.63
Trammel	Above	MW	N	3.875		
	Below			4	154.5	0.775

Summary of Biomonitoring Data submitted by Ameren

Ameren previously conducted monitoring of fish upstream and downstream of the power plant. The original studies were completed in 1974 and 1975 at the beginning of operations of the plant. Following the original granting of the 316(a) variance, Ameren conducted monitoring upstream and downstream of the plant from 1980-1985 seasonally. In 1996 through 2001, Ameren resumed monitoring up and downstream of the plant. The data below is a summary of number of fish caught. The 1996-2001 data shows the emergence of carp into the Missouri River.

In discussions with Missouri Department of Conservation on why fish may appear in one sampling set but not in the other, this may be due to the time of sampling event occurred and the sampling method used. While the data sets are similar in fish quantity, the number of collection events varied. The 1980-1985 data collection set is the most frequent.

DRAFT

TABLE 5: COMPARISON OF BIOLOGICAL MONITORING EVENTS AT LABADIE ENERGY CENTER

	1996-2001		1980-1985		1974-1975	
Species	Total Collected	%	Total Collected	%	Total Collected	%
american eel			7	0.2		
bighead carp					1	<0.1
bigmouth buffalo	15	0.4	9	0.3		
black buffalo	5	0.1	4	0.1		
black bullhead					4	0.2
black crappie	1	<0.1	10	0.3		
blue catfish	123	3.3	54	1.7	15	0.7
blue sucker	11	0.3	2	0.1		
bluegill	6	0.2	10	0.3	7	0.3
brook silversides			24	0.6		
bullhead					1	<0.1
catfish					9	0.4
channel catfish	163	4.4	68	2.1	14	0.7
chestnut lamprey	8	0.2	47	1.5	11	0.5
common carp	445	12	120	3.7	4	0.2
flathead catfish	83	2.2	73	2.3	21	1
freckled madtom						
Freshwater drum	170	4.6	275	8.5	289	13.7
Gizzard shad	1919	51.8	1863	57.9	1719	81.2
golden redhorse	1	<0.1	4	0.1		
goldeye	101	2.7	160	5		
grass carp	8	0.2	1	<0.1		
green sunfish	1	<0.1	2	0.1		
largemouth bass	4	0.1	5	0.2		
longear sunfish	1	<0.1	2	0.1		
longnose gar	36	1	40	1.2	1	<0.1
mimic shiner					1	<0.1
minnows					2	<0.1
mooneye	1	<0.1	9	0.3		
northern redhorse					2	<0.1
paddlefish	2	0.1	1	<0.1		
quillback	6	0.2	3	0.1		
red shiner	2	0.1				
river carpsucker	249	6.7	191	5.9	2	<0.1
rock bass			1	<0.1	3	0.1
sauger	2	0.1	7	0.2		
shorthead redhorse	2	0.1	6	0.2		
shortnose gar	114	3.1	121	3.8		
shovelnose sturgeon	1	<0.1	2	0.1		
silver carp	7	0.2				
skipjack herring	4	0.1	6	0.2		
smallmouth bass			3	0.1		
smallmouth buffalo	110	3	23	0.7		
speckled chub						
spotted bass	2	0.1	4	0.1		
stonecat					1	<0.1
striped bass	1	<0.1	2	0.1	2	<0.1
walleye			5	0.2		
white bass	51	1.4	60	1.9	3	0.1
white carppie	1	<0.1	18	0.6	5	0.2
white sucker	3	0.1	1	<0.1		
whiteXstriped hybrid	24	0.6				
Total:	3683	99.4	3243	100.8	2117	99.3

DRAFT

316(b) COOLING WATER INTAKE STRUCTURE

Section 316(b) of the Clean Water Act (CWA) applies to new or existing facilities operating a cooling water intake structure (CWIS). Section 316(b) requires that location, design, construction, and capacity of CWISs reflect the best technology available (BTA) for minimizing adverse environmental impacts (AEI). Under current regulations, existing facilities are subject to section 316(b) conditions that reflect BTA for minimizing AEI on a case-by-case, best professional judgment (BPJ) basis.

The Environmental Protection Agency's (EPA) Phase II Section 316(b) Existing Facilities Rule was remanded to the EPA in *Riverkeeper, Inc, et al. v EPA 475 F.3d 83* (2d Cir. 2007). The Federal Water Pollution Control Act Amendments of 1972 require cooling water intake structures to reflect the best technology available for minimizing adverse environmental impact. Best technology available must consider intake design, location, construction, and capacity. The EPA has finalized the 316(b) standards and they became effective on October 16, 2014 (http://water.epa.gov/lawsregs/lawsguidance/cwa/316b/index.cfm).

The Ameren Labadie Energy Center is located on the south bank of the Missouri River at river mile 57.5. The intake structure is located directly on the bank of the river. The main channel and greatest depth of the river occur immediately offshore of the intake structure. The Labadie Energy Center is equipped with one intake structure with eight bays. A trashrack with 2.5-inch opening and a mechanical rake is utilized to reduce debris loading to the traveling screens. Each intake bay contains a circulating water pump, trash rack and vertical traveling screen. All of the screens are flow through and have mesh panels with ½ -inch square openings. The screens are operated as dictated by river and operational conditions. The screens are operated more frequently when there are large amounts of debris or ice present. As the screens are rotated, high pressure nozzles spray water through the back of the screens, and into a trough which returns the backwash water along with any debris and/or impinged organisms back to the river.

The original CWA 316(b) demonstration for Labadie Energy Center was approved by the department by letter dated August 8, 1977 as "Best Technology Available". The report concluded that the estimated annual number of fish lost to impingement had no impact on the ecology or sport fishery of the Missouri River with respect to maintaining a balanced indigenous fish population. One reason for the relatively low numbers of fish collected during the impingement study was the location of the plant intake structure (i.e., main channel). This area of the river is characterized by swift current and shifting substratum which does not present a preferred fish habitat.

An impingement study was conducted in 2005 along with a biological characterization study conducted in 2005/2006. The biological characterization study was to provide a description of the abundance and temporal and spatial characterization of the community potentially vulnerable to impingement. Historical studies conducted between 1974 and 1975 concluded the intake structures did not have significant adverse environmental impacts and that the structures met the requirements of Section 316(b). Because the intake structure equipment and operation are essentially the same as the time of the original study, Ameren believes that the conclusion of the 1970s study is still valid.

EPA consulted with the US Fish and Wildlife Service and the National Marine Fisheries Service under the Endangered Species Act rules. The Services concluded that the new 316(b) rule is not likely to jeopardize the continued existence of listed species or result in adverse modification of designated critical habitat. However the Services added a number of conditions to the final rule. The rule requires that facilities identify all Federally-listed threatened and endangered species and designated critical habitat that are present in the zone of influence area of the intake. This condition includes all listed species not just fish and shellfish. Additional control measures, monitoring and reporting requirements may be established to minimize incidental take. The Services will have 60 days to review and comment on measures related to listed species and critical habitat.

The operating permit contains language indicating that the permit may be reopened and modified, or alternatively revoked and reissued to: incorporate new or modified requirements applicable to existing cooling water intake structures under Section 316(b) of the Clean Water Act consistent with any standard established pursuant to section 1311 or section 1316 of 33 USC 1326. In the event that, it is necessary for this permit to be reopened and modified, or alternatively revoked and reissued, permittee shall comply with any such new or modified requirements or standards applicable to existing cooling water intake structures under 316(b) of the Clean Water Act.

To meet the 316(b) requirements, Labadie will be required to meet one of the identified impingement BTA technologies, however as Labadie withdraws more than 125 MGD for cooling water needs, will also need to address entrainment. The implementation of impingement technology is delayed until the required entrainment studies are complete. The required studies include:

i. **Source Water Physical Data Report : 40 CFR 122.21(r)(2)** This report requires a description and scaled drawings showing the physical configuration of the water body, including areal dimensions, depths, and temperature regimes, identification and characterization of the source waterbody's hydrological and geomorphological features, estimate the intake's area of influence within the waterbody and locational maps.
ii. **Cooling Water Intake Structure Data Report, 40 CFR 122.21(r)(3):** This report requires information on the design of the intake structure and its location in the water column. It includes design intake flows, daily hours of operation, number of days of the year in operation and seasonal changes, if applicable; a flow distribution and water balance diagram that includes all

DRAFT

sources of water to the facility, recirculating flows, and discharges, and engineering drawings of the cooling water intake structure.

iii. **Source Water Baseline Biological Characterization Data Report, 40 CFR 122.21(r)(4):** This report characterizes the biological community in the vicinity of the cooling water intake structure.

iv. **Cooling Water System Data Report, 40 CFR 122.21(r)(5):** This report provides information on the operation of the cooling water system including descriptions of reductions in water withdrawals, recycled water, proportion of the source waterbody withdrawn.

v. **Chosen Method of Compliance with Impingement Mortality Standard, 40 CFR 122.21(r)(6).** Ameren must identify their chosen compliance method and if applicant chooses to comply with a technology option that requires the Impingement Technology Optimization Study , the study must be submitted.

vi. **Performance Studies, 40 CFR 122.21(r)(7):** This rule section requires a summary of biological survival studies conducted at the facility and a summary of any conclusions or results, including; site-specific studies addressing technology efficacy, entrainment survival, and other impingement and entrainment mortality studies. If using data more than 10 years old, applicant must explain why the data is still relevant and representative.

vii. **Operational Status, 40 CFR 122.21(r)(8):** The operational status report includes descriptions of each unit's operating status including age of the unit, capacity utilization for the previous 5 years, and any major upgrades completed within the last 15 years, including boiler replacement, condenser replacement, turbine replacement, and fuel change.

viii. **Entrainment Characterization Study, 40 CFR 122.21(r)(9)**:Facilities that withdraw **125 MGD** or more must develop for submission to the Director that includes 2 years of entrainment data. Entrainment Data Collection Method must identify and document the data collection period and frequency; identify all organisms collected to lowest taxon possible of all life stages of fish that are in the vicinity of the intake structure; identify threatened or endangered species, identify and document how the location of the intake structure in the waterbody are accounted for in data collection. The Biological Entrainment Characterization must describe all life stages including a description of their abundance and their temporal and spatial characteristics in the vicinity of the intake structure, based on sufficient data to characterize annual, seasonal, and diel variation in entrainment including variations related to climate, weather difference, feeding, and water column migration; may include historical data that is representative of the current operation of the facility; identification of all life stages of fish must represent both motile and non-motile life stages Analysis and Support Documentation of current entrainment of all life stages, may include historical data that is representative of current operation of the facility and of biological conditions at the site. Data to support the calculations must be collected during period of representative operational flows and flows associated with data collection must be documented. The method for determining latent mortality along with specific organism mortality or survival must be identified; the facility must identify and document all assumptions and calculation to determine total entrainment, along with all methods and QA/QC procedures.

ix. **Comprehensive Technical Feasibility and Cost Evaluation Study, 40 CFR 122.21(r)(10):** Facilities that withdraw **125 MGD** or more must develop for submission an engineering study of the technical feasibility and costs of entrainment technology options. Technical Feasibility must include closed cycle recirculation discussion, fine mesh screens with mesh size of 2 mm or smaller, water resuse or alternate sources of cooling water; description of all technologies and operational measures considered; land availability, including evaluation of adjacent and and acres potentially available due to generating unit retirements, potential repurposing of areas devoted to ponds, coal piles, rail yrs, transmission yards, and parking lots; discussion of available sources of process water, grey water, wastewater, reclaimed water or other waters of appropriate quantity and quality; and documentation of factors other than cost that may make a candidate technology impractical or infeasible. The cost evaluations must include estimates for all technologies considered; must be adjusted to estimate social costs; all costs must be represented in net present value and annual value; cost clearly labeled as compliance or social costs; separately discuss facility level costs and social costs; compliance costs are calculated after-tax, include administrative costs, permit costs, any outages, downtime; and social costs adjustment includes Director's administrative cost.

x. **Benefits Valuation Study, 40 CFR 122.21(r)(11):** Facilities that withdraw **125 MGD** or more must develop for submission to the Director, an evaluation of the entrainment technology and operational measure benefits. Each category of benefit must be described narratively and benefits should be quantified in physical or biological units and monetized using appropriate economic valuation methods. Must use the Entrainment Characterization Study. Benefit Valuation Study must include: incremental changes in number of individual fish lost due to impingement mortality and entrainment for all life stages; description of basis for any estimates of changes in the stock size or harvest levels of commercial and recreational fish; description of basis for any monetized values assigned to changes in the stock size of commercial and recreational fish, and to any other ecosystem or non-use benefits; discussion of mitigation efforts completed before October 2014; discussion with quantification and monetization, where possible any other benefits expected to accrue, including improvements for mammals,

DRAFT

birds, other organisms and aquatic habitats; and discussion of benefits expected to result from reductions in thermal discharges from entrainment technologies (closed-cycle cooling).

xi. **Non-Water Quality Impacts Assessment, 40 CFR 122.21(r)(12):** Facilities that withdraw **125 MGD** or more must develop for submission to the Director a detailed site-specific discussion of changes in non-water quality environmental and other impacts attributed to each technology and operational measure, both increases and decreases. Must include discussion of estimate in change in energy consumption, estimate of air pollutant emissions and of human health environmental impacts, estimates in change in noise, discussion of impacts to safety, including potential plumes, icing and availability of emergency cooling water, discussion of facility reliability, impacts to production based on process unit, reliability due to cooling water availability; significant changes in consumption of water, including comparison of evaporative losses of both once through and closed cycle recirculation, documentation of impacts attributable to changes in water consumption, and discussion of all attempts to mitigate each of these factors.

xii. Additional measures to protect federally listed threatened and endangered species and designated critical habitat, 40 CFR 125.94(g). The Director may establish additional permit control measures, monitoring requirements, reporting requirements than the minimum established to minimize incidental take, reduce or remove detrimental effects, or such control measures may include measures identified by the US Fish and Wildlife Field Office during their 60 day review. When the Director requires additional measures for federally listed species, monitoring is required, 40 CFR 125. 96(g) and may require additional studies and monitoring if threatened or endangered species identified in the vicinity of the intake, 40 CFR 125.98(d).

xiii. **Peer Review, 40 CFR 122.21(r)(13):** The Non-Water Quality Impacts Assessment, Benefits Valuation Study, and Comprehensive Technical Feasibility and Cost Evaluation Study require peer review. Facility must submit the studies for external peer review. Facility selects the peer reviewers and must notify the Department in advance of the peer review. The Director can disapprove a peer reviewer or require additional peer reviewers. The Director may confer with EPA, US Fish and Wildlife, MDC, and PSC to determine which peer review comments must be addressed. Ameren must provide an explanation for any significant reviewer comment not accepted.

DRAFT

316(b) Cooling Water Intake Structure (continued):

TABLE 6: COMPARISON OF IMPINGEMENT STUDIES AT LABADIE ENERGY CENTER

Species	2005-2006		1974-1975	
	Total Collected	%	Total Collected	%
Bass			1	<0.1
blue catfish	140	2	15	0.7
blue sucker	2	<0.1		
Bluegill	28	0.4	7	0.3
brook silversides				
Bullhead			1	<0.1
bullhead minnow	1	<0.1		
Carpsuckers	1	<0.1		
Catfish			9	0.4
channel catfish	119	1.7	14	0.7
chestnut lamprey			11	0.5
common carp	17	0.2	4	0.2
emerald shiner	5	<0.1		
flathead catfish	76	1.1	21	1
freckled madtom	3	<0.1		
Freshwater drum	2,003	28.7	289	13.7
Gizzard shad	4,459	64	1,719	81.2
golden redhorse	6	<0.1		
Goldeye	28	0.4		
Goldfish	1	<0.1		
green sunfish	5	<0.1		
lake sturgeon	9	0.1		
largemouth bass	2	<0.1		
longnose gar			1	<0.1
mimic shiner			1	<0.1
Minnows	1	<0.1	2	<0.1
Mooneye	2	<0.1		
northern redhorse			2	<0.1
Quillback	3	<0.1		
red shiner	4	<0.1		
redfin shiner	4	<0.1		
river carpsucker	1	<0.1	2	<0.1
rock bass	3	<0.1	3	<0.1
Sauger	2	<0.1		
shorthead redhorse	5	<0.1		
shovelnose sturgeon	11	0.2		
silver carp	5	<0.1		
skipjack herring	10	0.1		
speckled chub	1	<0.1		
Stonecat			1	<0.1
stonecat madtom	7	0.1		
striped bass			2	<0.1
sturgeon chub	1	<0.1		
Warmouth	1	<0.1		
white bass	3	<0.1	3	0.1
white crappie	1	<0.1	5	0.2
Total:	6,970		2,113	

DRAFT

Part V – Effluent Limits Determination

Outfall #001 **–** Non-contact Cooling Water

EFFLUENT LIMITATIONS TABLE:

PARAMETER	UNIT	BASIS FOR LIMITS	DAILY MAXIMUM	WEEKLY AVERAGE	MONTHLY AVERAGE	MODIFIED	PREVIOUS PERMIT LIMITATIONS
FLOW (EFFLUENT)	CFS	1	*		*	YES	MGD TO CFS
INTERIM TEMPERATURE (EFFLUENT)	°F	3,9	*		*	YES	MONTHLY AVERAGE *
FINAL TEMPERATURE (EFFLUENT)	°F	3,9	90		*	YES	*
TEMPERATURE (STREAM)	°F	2,3	*		*	YES	MONTHLY AVERAGE *
INTERIM DELTA TEMPERATURE (ΔT)	°F	2,3	*		*	YES	**
FINAL DELTA TEMPERATURE (ΔT)	°F	2,3	±5		*	YES	**
INTERIM THERMAL DISCHARGE LIMIT	BTUS/HR	2,8	11.16×10^9		*	NO	
WHOLE EFFLUENT TOXICITY (WET) TEST	TUc	11	Please see WET Test in the Derivation and Discussion Section below.			YES	%SURVIVAL
MONITORING FREQUENCY	Please see Minimum Sampling and Reporting Frequency Requirements in the Derivation and Discussion Section below.						

* - Monitoring requirement only.
** - Parameter was not established in the previous state operating permit.

Basis for Limitations Codes:

1. State or Federal Regulation/Law
2. Water Quality Standard (includes RPA)
3. Water Quality Based Effluent Limits
4. Ammonia Policy
7. Antidegradation Policy
8. Water Quality Model
9. Best Professional Judgment
10. WET Test Policy

OUTFALL #001– DERIVATION AND DISCUSSION OF LIMITS:

- **Flow (Effluent)**. In accordance with [40 CFR Part 122.44(i)(1)(ii)] the volume of effluent discharged from each outfall is needed to assure compliance with permitted effluent limitations. If the permittee is unable to obtain effluent flow, then it is the responsibility of the permittee to inform the department, which may require the submittal of an operating permit modification. This change was implemented to make ease calculations using flow measurements.

- **Temperature (Effluent)**. Daily monitoring only requirement in °F. Temperature (Effluent) is the measured temperature of the discharge and is not the measured difference between the intake temperature and the discharge temperature. This renewal establishes a 10 year schedule of compliance to meet the final effluent limit of 90°F. The final limit will be established in the next renewal unless a 316(a) variance supports an alternative limit.

- **Delta Temperature (ΔT)**. Facility is covered under a 316(a) variance for both compliance with the state temperature standard and for the change in temperature. Previous permits tracking of the change in temperature were not monitoring condition of the permit, instead were a reporting condition. This permit requires Ameren to monitor the change in temperature, in accordance with [10 CSR 20-7.031(4)(D)1.]. This renewal establishes a 10 year schedule of compliance to meet the final effluent limit of 90°F. The final limit will be established in the next renewal unless a 316(a) variance supports an alternative limit.

  ΔT is calculated as follows: $\Delta T = [((Q_s/4)T_s + Q_e T_e) / ((Q_s/4) + Q_e)] - T_s$

  Where,
  $Q_s/4$= is the receiving stream flow in cfs divided by 4 or the flow represented in the cross-sectional area of the receiving stream divided by 4 in accordance with [10 CSR 20-7.031(4)(D)6.]
  Q_e = Effluent Flow.
  T_s = Receiving stream's ambient temperature. A facility's intake temperature can be used for this parameter if the facility believes that it is representative of the receiving stream's actual temperature.
  T_e = Temperature of the Effluent.

DRAFT

- **Thermal Discharge Effluent Limits**. Ameren was granted a 316(a) variance in 1977 by the department. With the granting of the variance, alternative effluent limits were developed to track compliance. The alternative effluent limits are btus/hr. In the 1992 permit, Ameren received the increase in btus/hr allowed to discharge, based on the Labadie Thermal Plume and Applicability of Section 316(a) Report that was submitted with their comment letter in 1992. The changes from 10.63 x 10^9 btus/hr to 11.16 x10^9 btus/hr was based on refinement of the calculation and to account for normal turbine degradation, see 316(a) discussion above. The department is regranting the alternative effluent limits of 11.16 x10^9 btus/hr as interim effluent limits with a schedule of compliance.

- **WET Test**. Unscheduled WET test. WET Testing schedules and intervals are established in accordance with the department's Permit Manual; Section 5.2 *Effluent Limits / WET Testing for Compliance Bio-monitoring.* It is recommended that WET testing be conducted during the period of lowest stream flow.
  - ☒ Acute
    - ☒ No less than **ONCE/YEAR:**
      - ☒ Facility is designated as a Major facility or has a design flow ≥ 1.0 MGD.

Acute AEC% = $((\text{design flow}_{cfs} + ZID_{7Q10}) / \text{design flow}_{cfs})^{-1}] \times 100$ = ##%
Acute AEC% = $((2213.4 + 1379) / 2213.4)^{-1}] \times 100$ = 61.6% rounded up to 62%

- **Minimum Sampling and Reporting Frequency Requirements**. Sampling and reporting frequency requirements have been retained from previous state operating permit.

Outfall #010– Intake Cooling Water

EFFLUENT LIMITATIONS TABLE:

PARAMETER	UNIT	BASIS FOR LIMITS	DAILY MAXIMUM	WEEKLY AVERAGE	MONTHLY AVERAGE	MODIFIED	PREVIOUS PERMIT LIMITATIONS
STREAM FLOW	CFS	2,3	*		*	YES	**
TEMPERATURE (EFFLUENT)	°F	3,9	*		*	YES	MONTHLY AVERAGE *
TSS (INTAKE)	MG/L	1,9	*		*	NO	
HARDNESS AS $CaCO_3$	mg/L	2,9	*		*	YES	**
MONITORING FREQUENCY	Please see Minimum Sampling and Reporting Frequency Requirements in the Derivation and Discussion Section below.						

* - Monitoring requirement only.
** - Parameter was not established in the previous state operating permit.

Basis for Limitations Codes:

1. State or Federal Regulation/Law
2. Water Quality Standard (includes RPA)
3. Water Quality Based Effluent Limits
4. Lagoon Policy
5. Ammonia Policy
6. Dissolved Oxygen Policy
7. Antidegradation Policy
8. Water Quality Model
9. Best Professional Judgment
10. TMDL or Permit in lieu of TMDL
11. WET Test Policy
12. Antidegradation Review

PERMITTED FEATURE #010– DERIVATION AND DISCUSSION OF LIMITS:
Permitted Feature #010 is established in this permit to characterize the intake water at the facility, for compliance with effluent limits at Outfall #001.

- **Flow (Stream)**. Daily monitoring only requirement in cfs. It is the department's expectations that the permittee will obtain stream flow data from appropriate and applicable sources, such as the upstream USGS Gauging Stations (Missouri River at Hermann, MO). If there is a significant distance from the facility to the nearest gauging station, it may be in the best interest of the permittee to fund a new gauging station; however, it is not required. Additionally, the department will only use gauging station data as a viable source of stream flow. Meaning that flows (design or actual) from other point sources will not be considered (i.e., added to the flow determination).

- **Temperature (Stream)**. Daily monitoring only requirement in °F. For most facilities, the intake temperature can be used to determine stream's temperature. However, in some cases, the ambient stream temperature can be used. The permittee will need to inform the department that they may use the actual stream's temperature.

DRAFT

OUTFALL #002, 009– ASH POND & EMERGENCY SPILLWAY FROM ASH PONDS

Effluent limitations derived and established in the below Effluent Limitations Table are based on current operations of the facility. Future permit action due to facility modification may contain new operating permit terms and conditions that supercedes the terms and conditions, including effluent limitations, of this operating permit.

PARAMETER	UNIT	BASIS FOR LIMITS	DAILY MAXIMUM	WEEKLY AVERAGE	MONTHLY AVERAGE	MODIFIED	PREVIOUS PERMIT LIMITATIONS
FLOW	MGD	1	*		*	NO	
CHEMICAL OXYGEN DEMAND	MG/L	9	*		*	YES	***
TSS (NET)	MG/L	1	100		30	NO	
TSS (GROSS)	MG/L	1,9	*		*	NO	
PH**	SU	1,2	6.5-9.0		6.5-9.0	YES	6.0-9.0
OIL & GREASE **	MG/L	1,2	15		10	YES	20/15
SULFATE AS SO_4	MG/L	2,9	*		*	NO	
CHLORIDE	µG/L	9	*		*	YES	***
BORON, TOTAL RECOVERABLE	µG/L	9	*		*	YES	***
TOTAL NITROGEN	MG/L	1	*		*	YES	***
TOTAL PHOSPHORUS	MG/L	1	*		*	YES	***
WHOLE EFFLUENT TOXICITY (WET) TEST	TUc	11	Please see WET Test in the Derivation and Discussion Section below.			YES	%SURVIVAL
MONITORING FREQUENCY	Please see Minimum Sampling and Reporting Frequency Requirements in the Derivation and Discussion Section below.						

* Monitoring requirement only.
** pH is measured in pH units and is not to be averaged. The pH is limited to the range of 6.5-9.0 pH units.
*** New parameter, not previously established

Basis for Limitations Codes:

1. State or Federal Regulation/Law
2. Water Quality Standard (includes RPA)
3. Water Quality Based Effluent Limits
4. Lagoon Policy
5. Ammonia Policy
6. Dissolved Oxygen Policy
7. Antidegradation Policy
8. Water Quality Model
9. Best Professional Judgment
10. TMDL or Permit in lieu of TMDL
11. WET Test Policy
12. Antidegradation Review

OUTFALL #002, 009– DERIVATION AND DISCUSSION OF LIMITS:

A discussion of Technology Based Effluent Limits (TBEL) and Water Quality Based Effluent Limits (WQBEL) is found below. Where differences exist, the more protective standard will be used to establish permit limitations, as summarized in the table at the end of this section.

- **Flow**. In accordance with [40 CFR Part 122.44(i)(1)(ii)] the volume of effluent discharged from each outfall is needed to assure compliance with permitted effluent limitations. If the permittee is unable to obtain effluent flow, then it is the responsibility of the permittee to inform the department, which may require the submittal of an operating permit modification.

- **Total Suspended Solids (Intake, Net, & Gross)**. Due to the fact that there are several sources with differing flows subject to different ELGs, effluent limitations for TSS will be established in concentration (mg/L) rather than mass (lb/day), in accordance with 40 CFR 423.12(b)(11). Additionally, TSS is to be reported as a net and/or gross limit in accordance with 40 CFR 122.45(g). Therefore, TSS limits are 100 mg/L as a Daily Maximum and 30 mg/L as a Monthly Average, in accordance with 40 CFR 423.12(b)(3) and (4). The following conditions apply to TSS limits for determining compliance with regards to credit for TSS from intake waters.

    1. Only water withdrawn from the Missouri River that is used for process (e.g., fly ash transport) water and discharged to the Missouri River is to be used in calculating the net discharge of TSS. Credit for TSS from other sources of water (including rainwater) can not be used for credit.
    2. Credit may be taken only to the extent necessary to meet effluent limits.
    3. The maximum credit may not exceed the concentration in the intake water
    4. All measures for flow and TSS must be made the same day.

DRAFT

Net discharge is to be calculated as follows:
$(Q_d \times 8.34 \times C_d) - (Q_r \times 8.34 \times C_r) / (Q_d \times 8.34)$ = Net discharge in mg/L

Where:
Q_d = Flow from Outfall #002 (in MGD) that was withdrawn from the Missouri River;
C_d = Concentration of TSS measure in the final effluent from Outfall #002 in mg/L;
Q_r = Intake flow (in MGD) that flows to Outfall #002 ;
C_r = Intake flow TSS concentration.
When taking credit for TSS in the intake water, the permittee will be required to document all measurements and calculations used to determine the amount of the credit and shall report the gross and the net discharge of TSS on the discharge monitoring report. Therefore, TSS intake and gross are required to have monitoring conditions only. The TSS Net discharge shall never be less than 0 mg/L.

- **pH**. In accordance with 40 CFR 423.12(b)(1), pH shall be maintained in the range of 6.0 – 9.0. In accordance with 10 CSR 20-7.031(4)(E), pH shall be maintained in the range of 6.5 – 9.0 pH SU, and pH is not to be averaged. DMRs for the past 5 years were reviewed and document that this facility can meet the new more protective limits. Therefore, pH limitation range will be applicable upon issuance of this operating permit

- **Oil & Grease.** Due to the fact that there are several sources with differing flows subject to different ELGs, effluent limitations for Oil and Grease will be established in concentration (mg/L) rather than mass (lb/day), in accordance with 40 CFR 423.12(b)(11). 20 mg/L as a Daily Maximum and 15 mg/L as a Monthly Average in accordance with 40 CFR 423.12(b)(3) & (4). The water quality standard for the protection of aquatic life; 10 mg/L monthly average, 15 mg/L daily maximum. DMRs for the past 5 years were reviewed and document that this facility can meet the new more protective limits. Therefore, O&G limits will be applicable upon issuance of this operating permit.

Technology-based Effluent Limit versus Water Quality-based Effluent Limit
Limitations in bold signify they are more protective and will be established as a permit limit.

Pollutant	TBEL (40 CFR 423)		WQBEL (10 CSR 20-7.031)	
	Daily Maximum	Monthly Average	Daily Maximum	Monthly Average
TSS	**100 mg/L**	**30 mg/L**	N/A	N/A
pH	6.0 – 9.0	6.0 – 9.0	**6.5 – 9.0**	**6.5 – 9.0**
Oil & Grease	20	15	**15**	**10**

- **Chemical Oxygen Demand.** Monitoring is included using the permit writer's best professional judgment. There is no water quality standard for COD; however, increased oxygen demand may impact instream water quality. COD is also a valuable indicator parameter. COD monitoring allows the permittee to identify increases in COD that may indicate materials/chemicals coming into contact with stormwater that cause an increase in oxygen demand. Increases in COD may indicate a need for maintenance or improvement of BMPs.

- **Sulfate, as SO_4**. Effluent limitations from the previous state operating permit have been reassessed and verified that they are still protective of the receiving stream's Water Quality. Therefore, effluent limitations have been retained from previous state operating permit, please see the APPLICABLE DESIGNATION OF WATERS OF THE STATE sub-section of the Receiving Stream Information. The drinking water standard for sulfate is 250 mg/L. Monitoring only.

- **Chloride**. Missouri has proposed a state water quality standards change since the previous permit was issued. In the proposed standard, the sulfate standard for protection of aquatic life is dependent on the hardness and the chloride concentration. The hardness concentration is being collected under Outfall 001.

- **Boron, Total Recoverable.** In evaluating the expanded test results for Outfall 002 and comparing with the background concentration and the technology based effluent limit determination, monitoring only is being required for this permit.

- **Total Phosphorus and Total Nitrogen.** Monitoring required for facilities greater than 100,000 gpd design flow per 10 CSR 20-7.015(9)(D)7. Total Nitrogen shall be determined by testing for Total Kjeldahl Nitrogen (TKN) and Nitrate + Nitrite and reporting the sum of the results (reported as N). Nitrate + Nitrite can be analyzed together or separately.

- **WET Test**. Outfall 002 has WET testing requirements. WET Testing schedules and intervals are established in accordance with the department's Permit Manual; Section 5.2 *Effluent Limits / WET Testing for Compliance Bio-monitoring.* It is recommended that WET testing be conducted during the period of lowest stream flow.

DRAFT

☒ Acute

☒ No less than **ONCE/YEAR:**

☒ Facility is designated as a Major facility or has a design flow ≥ 1.0 MGD.

☒ Facility has Water Quality-based effluent limitations for toxic substances (other than NH_3).

Acute AEC% = $((\text{design flow}_{cfs} + ZID_{7Q10}) / \text{design flow}_{cfs})^{-1}] \times 100$ = ##%
Acute AEC% = $((89.59 + 1379) / 89.59)^{-1}] \times 100$ = 6.1% rounded up to 7%
Dilution series is as follows: 100%, 50%, 25%, 7.0%, and 3.5%

- **Minimum Sampling and Reporting Frequency Requirements**. Sampling and reporting frequency requirements have been retained from previous state operating permit. Chloride, Boron, and Molybdenum sampling shall match sulfate monitoring of quarterly. Outfall 009, emergency spillway sampling is once per discharge.

OUTFALL #002A- ACTIVATED SLUDGE TREATMENT PLANT, SANITARY WASTEWATER

Effluent limitations derived and established in the below Effluent Limitations Table are based on current operations of the facility. Future permit action due to facility modification may contain new operating permit terms and conditions that supersede the terms and conditions, including effluent limitations, of this operating permit.

EFFLUENT LIMITATIONS TABLE:

PARAMETER	UNIT	BASIS FOR LIMITS	DAILY MAXIMUM	WEEKLY AVERAGE	MONTHLY AVERAGE	MODIFIED	PREVIOUS PERMIT LIMITATIONS
FLOW	GPD	1	*		*	NO	
BOD_5	MG/L	1	45		30	NO	
TSS	MG/L	1	45		30	NO	
pH	SU	1	6.0-9.0		6.0-9.0	NO	
AMMONIA AS N	MG/L	2	*		*	YES	***
CHLORINE, TOTAL RESIDUAL	MG/L	2	*		*	YES	***
ESCHERICHIA COLI FORM	**	1,2,3	Please see Escherichia Coli (E. coli) in the Derivation and Discussion Section below.			YES	***
MONITORING FREQUENCY	Please see Minimum Sampling and Reporting Frequency Requirements in the Derivation and Discussion Section below.					No	

* - Monitoring requirement only.
** - # of colonies/100mL; the Monthly Average for *E. coli* is a geometric mean.
*** - Parameter not previously established in previous state operating permit.

Basis for Limitations Codes:

1. State or Federal Regulation/Law
2. Water Quality Standard (includes RPA)
3. Water Quality Based Effluent Limits
4. Lagoon Policy
5. Ammonia Policy
6. Dissolved Oxygen Policy
7. Antidegradation Policy
8. Water Quality Model
9. Best Professional Judgment
10. TMDL or Permit in lieu of TMDL
11. WET Test Policy
12. Antidegradation Review

OUTFALL #002A– DERIVATION AND DISCUSSION OF LIMITS:

- **Flow**. In accordance with [40 CFR Part 122.44(i)(1)(ii)] the volume of effluent discharged from each outfall is needed to assure compliance with permitted effluent limitations. If the permittee is unable to obtain effluent flow, then it is the responsibility of the permittee to inform the department, which may require the submittal of an operating permit modification.

- **Biochemical Oxygen Demand (BOD_5).** Effluent limitations from the previous state operating permit have been reassessed and verified that they are still protective of the receiving stream's Water Quality. Therefore, effluent limitations have been retained from previous state operating permit, please see the **APPLICABLE DESIGNATION OF WATERS OF THE STATE** sub-section of the **Receiving Stream Information.**

- **Total Suspended Solids (TSS).** Effluent limitations from the previous state operating permit have been reassessed and verified that they are still protective of the receiving stream's Water Quality. Therefore, effluent limitations have been retained from previous state operating permit, please see the **APPLICABLE DESIGNATION OF WATERS OF THE STATE** sub-section of the **Receiving Stream Information**.

DRAFT

- **pH**. 6.0-9.0 SU. Technology based limits [10 CSR 20-7.015] are protective of the water quality standard [10 CSR 20-7.031(5)(E)], due to the buffering capacity of the mixing zone

- **Total Ammonia Nitrogen.** A monitoring requirement only will be established in the permit. Upon next renewal, monitoring data will be used to conduct a Reasonable Potential Analysis. Early Life Stages Present Total Ammonia Nitrogen criteria apply [10 CSR 20-7.031(4)(B)7.C.] default pH 7.8 SU. Background total ammonia nitrogen = 0.03 mg/L in the Missouri River

.

- ***Escherichia coliform (E. coli).*** Monthly average of 206 per 100 mL as a geometric mean and Daily Maximum of 1030 during the recreational season (April 1 – October 31), to protect Whole Body Contact Recreation (B) designated use of the receiving stream, as per 10 CSR 20-7.031(4)(C). An effluent limit for both monthly average and daily maximum is required by 40 CFR 122.45(d). Design flow of the treatment plant is less than 100,000 gpd, thus the monitoring frequency is equal to the other parameters of once per quarter. Ameren plans to install ultraviolet disinfection to meet *E. Coli* effluent limits.

- **Minimum Sampling and Reporting Frequency Requirements**. Sampling and reporting frequency requirements have been retained from previous state operating permit.

Outfalls #003-006– Stormwater Runoff, benchmarks

EFFLUENT LIMITATIONS TABLE:

PARAMETER	UNIT	BASIS FOR LIMITS	BENCHMARK	MODIFIED	PREVIOUS PERMIT LIMITATIONS
FLOW	GPD	1	*	YES	**
COD	MG/L	1,2,3	90	YES	****
SETTLEABLE SOLIDS	ML/L/HR	1,2,3	1.5	YES	**2.0/1.5**
pH	SU	1	6.5-9.0	YES	**6.0-9.0**
OIL & GREASE	MG/L	1	10	YES	****
MONITORING FREQUENCY	Please see Minimum Sampling and Reporting Frequency Requirements in the Derivation and Discussion Section below.				

* - Monitoring requirement only.
** - Parameter not previously established in previous state operating permit.
*** - There shall be no PCBs in the effluent.

Basis for Limitations Codes:

1. State or Federal Regulation/Law
2. Water Quality Standard (includes RPA)
3. Water Quality Based Effluent Limits
4. Lagoon Policy
5. Ammonia Policy
6. Dissolved Oxygen Policy
7. Antidegradation Policy
8. Water Quality Model
9. Best Professional Judgment
10. TMDL or Permit in lieu of TMDL
11. WET Test Policy
12. Antidegradation Review

OUTFALLS #003 - #006 – DERIVATION AND DISCUSSION OF LIMITS:

- **Flow**. In accordance with [40 CFR Part 122.44(i)(1)(ii)] the volume of effluent discharged from each outfall is needed to assure compliance with permitted effluent limitations. If the permittee is unable to obtain effluent flow, then it is the responsibility of the permittee to inform the department, which may require the submittal of an operating permit modification.

- **Chemical Oxygen Demand (COD_5).** Based on data submitted on Form 2F of the application for renewal, monitoring is included using the permit writer's best professional judgment. There is no water quality standard for COD; however, increased oxygen demand may impact instream water quality. COD is also a valuable indicator parameter. COD monitoring allows the permittee to identify increases in COD that may indicate materials/chemicals coming into contact with stormwater that cause an increase in oxygen demand. Increases in COD may indicate a need for maintenance or improvement of BMPs. Additionally, a benchmark value will be implemented for this parameter. The benchmark value will be set at 90 mg/L. This value falls within the range of values implemented in other permits that have similar industrial activities and the Environmental Protection Agency's (EPA's) *Multi-Sector General Permit For Stormwater Discharges Associated With Industrial Activity* (MSGP).

- **Settleable Solids.** Effluent limitations from the previous state operating permit have been reassessed. Monitoring remains on the stormwater outfalls for settleable solids to ensure the best management practices are maintained and operating correctly. The permittee is required to develop and implement a SWPPP and adhere to Best Management Practices (BMPs).

DRAFT

- **pH**. pH shall be maintained within the range from 6.5 to 9.0 Standard Units (SU) as per 10 CSR 20-7.031(4)(E).

- **Oil & Grease**. Conventional pollutant, effluent limitation for protection of aquatic life; 10 mg/L monthly average, 15 mg/L daily maximum.

- **Minimum Sampling and Reporting Frequency Requirements**. Sampling will be required at a minimum of twice per year, once in the spring and once in fall to verify that the best management practices are being maintained and operated correctly. Reporting frequency will be semi-annually.

Part VI – Administrative Requirements

On the basis of preliminary staff review and the application of applicable standards and regulations, the department, as administrative agent for the Missouri Clean Water Commission, proposes to issue a permit(s) subject to certain effluent limitations, schedules, and special conditions contained herein and within the operating permit. The proposed determinations are tentative pending public comment.

PERMIT SYNCHRONIZATION:
The Department of Natural Resources is currently undergoing a synchronization process for operating permits. Permits are normally issued on a five-year term, but to achieve synchronization many permits will need to be issued for less than the full five years allowed by regulation. The intent is that all permits within a watershed will move through the Watershed Based Management (WBM) cycle together will all expire in the same fiscal year. This will allow further streamlining by placing multiple permits within a smaller geographic area on public notice simultaneously, thereby reducing repeated administrative efforts. This will also allow the department to explore a watershed based permitting effort at some point in the future.

The Labadie Energy Center Permit will be issued for 5 years. Due to the conditions as of this permit to reestablish a monitoring program and develop a groundwater program, this permit will be synchronized with the other permits in the watershed during the next permit cycle.

PUBLIC NOTICE:
The department shall give public notice that a draft permit has been prepared and its issuance is pending. Additionally, public notice will be issued if a public hearing is to be held because of a significant degree of interest in and water quality concerns related to a draft permit. No public notice is required when a request for a permit modification or termination is denied; however, the requester and permittee must be notified of the denial in writing.

The department must issue public notice of a pending operating permit or of a new or reissued statewide general permit. The public comment period is the length of time not less than 30 days following the date of the public notice which interested persons may submit written comments about the proposed permit. For persons wanting to submit comments regarding this proposed operating permit, then please refer to the Public Notice page located at the front of this draft operating permit. The Public Notice page gives direction on how and where to submit appropriate comments.

☒ - The Public Notice period for this operating permit is tentatively scheduled to begin in December 2014.

DATE OF FACT SHEET: NOVEMBER 14, 2012;JANUARY 17, 2013; NOVEMBER 3, 2014

COMPLETED BY:
LEASUE MEYERS, EIT
OPERATING PERMITS SECTION,
WATER PROTECTION PROGRAM
LEASUE.MEYERS@DNR.MO.GOV

DRAFT

Appendices

APPENDIX A: FACILITY MAP

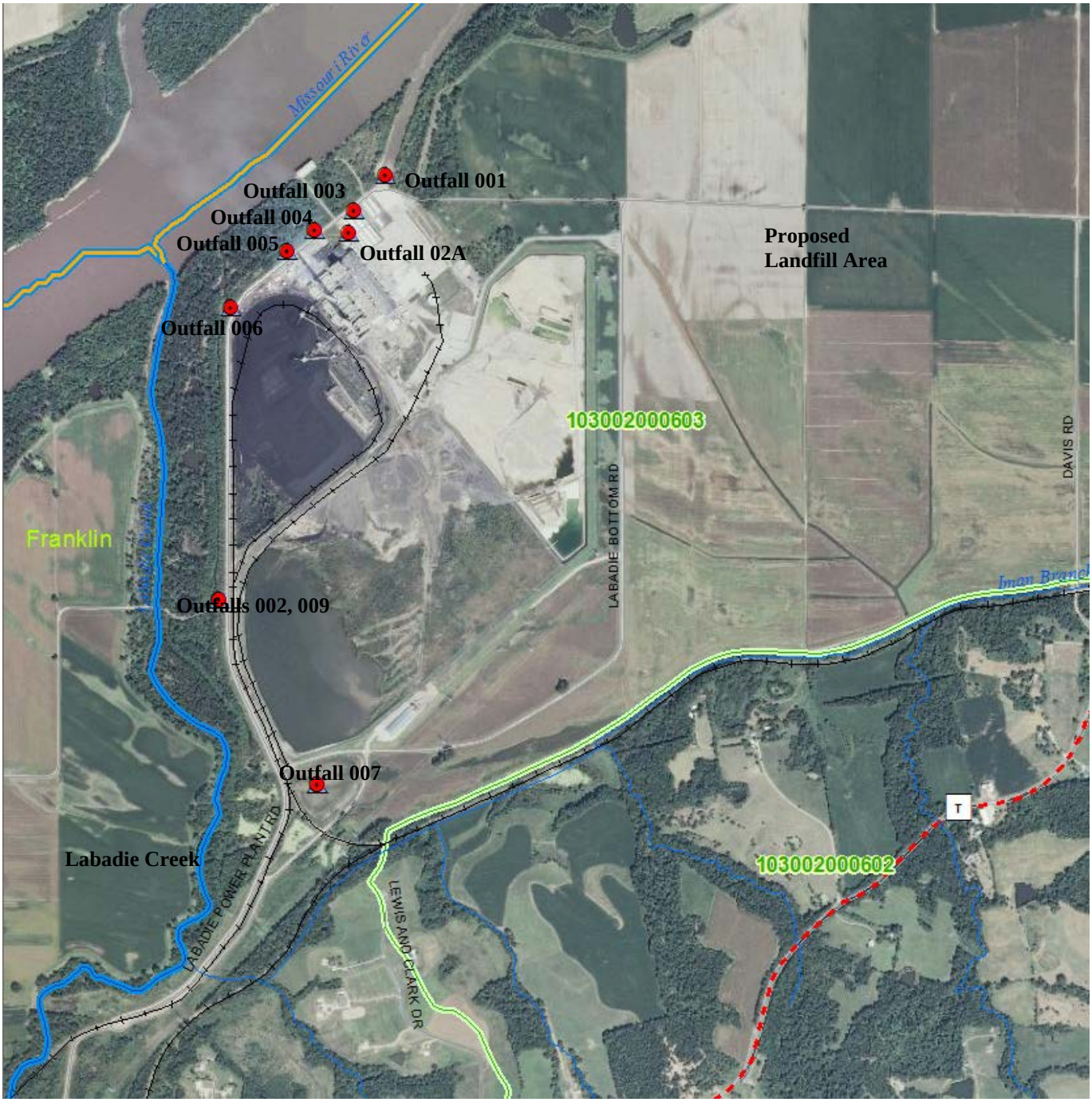

APPENDIX B: WATER FLOW DIAGRAM

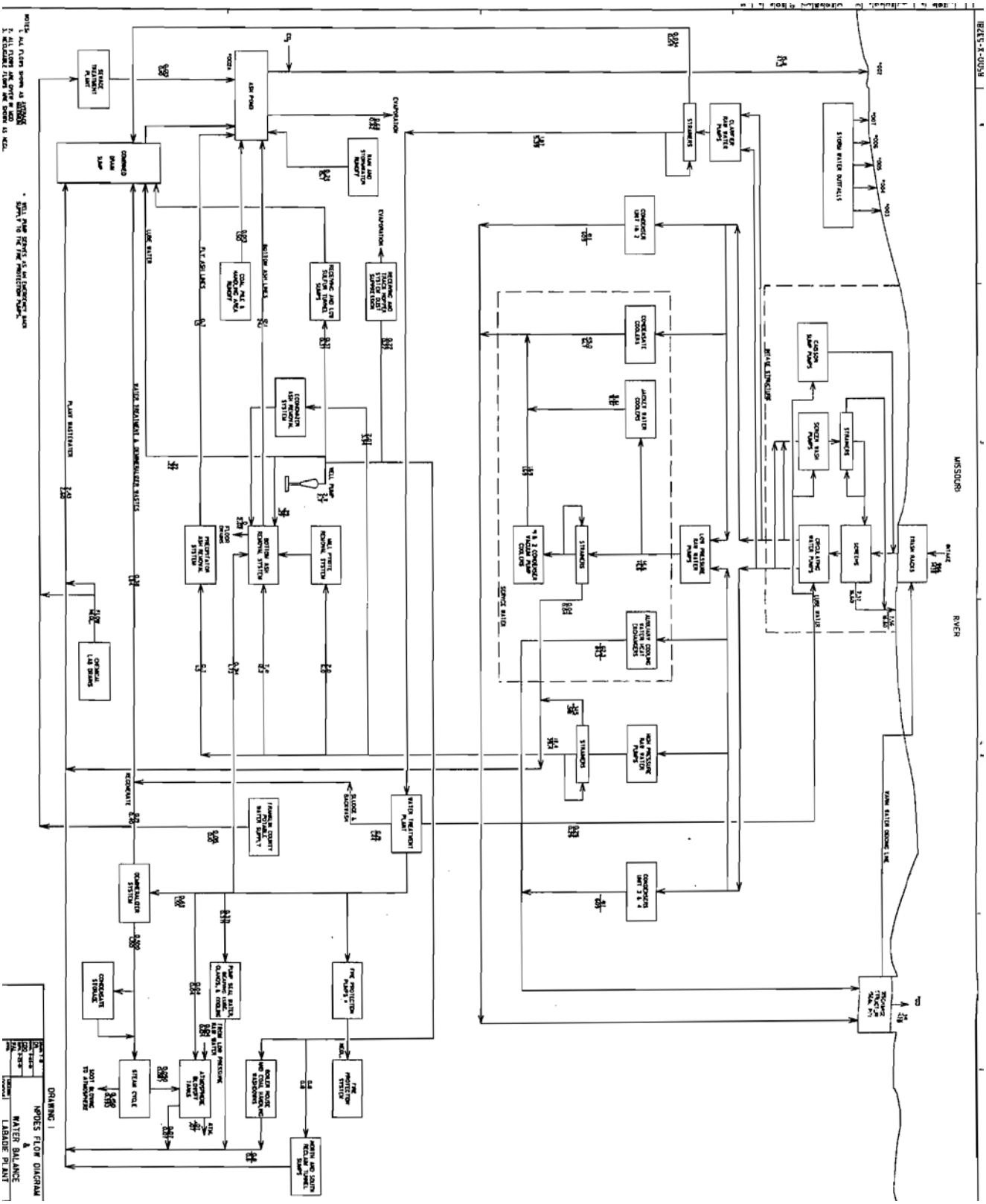

APPENDIX C: TBEL DETERMINATION

The EPA in 2009 published the "Steam Electrical Power Generating Point Source Category: Final Detailed Study Report (2009 Final Report). The 2009 Final Report summarizes data collected and analyzed from the EPA to review discharges from steam electrical power generating industry and to determine whether the current effluent guidelines for this industry and to determine whether current Effluent Limit Guidelines (ELGs) for this industry should be revised. From the 2009 Final Report, it determined a need existed to update the current effluent regulations specific to Steam Electrical Power Generating Point Sources [40 CFR Part 423]. The 2009 Final Report also concluded that the last updated version of this 1982 regulation does not adequately address the pollutants being discharged and have not kept pace with changes that have occurred in the power industry.

The 2009 Final Report identified pollutants that are commonly associated with the power industry (i.e., Flue Gas Desulfurization [FGD] & Coal Combustion Residuals [CCR]). The 2009 Final Report does not address how to determine a Pollutant of Concern (POC), but (as stated above) determined a need for the EPA to revise the current ELG 40 CFR 423. The EPA expects to complete this rulemaking and promulgate revised effluent guidelines in late 2014.

On June 7, 2010, the EPA's Office of Wastewater Management sent a memorandum to provide interim guidance to assist permitting authorities to appropriately establish permit requirements for wastewater discharges from FGD systems and CCR impoundments at steam power plants. The 2010 EPA memo contained two (2) attachments: Appendix A – provided permitting authorities with information on how to establish TBELs for FGD; and Appendix B – was intended to assist permitting authorities to better address water quality impacts associated with discharges from coal ash impoundments. The 2010 EPA memo does not demonstrate how to determine if a pollutant needs to have TBEL limits.

Federal regulation 40 CFR Part 125.3(c) and 40 CFR Part 125.3(d) are the basis for establishing technology-based effluent limits and BPJ TBELs. To better understand these regulations, the EPA's Permit Writers Manual 5.2.3.2 discusses how to identify the need for case-by-case TBELs. In this section of the EPA Permit Writers Manual, it is the fourth bullet point that is specific to power plant industries with regard to the 2009 Final Report and the 2010 EPA memo. It states, "*When effluent guidelines are available for the industry category, but no effluent guidelines requirements are available for the pollutant of concern (e.g., a facility is regulated by the effluent guidelines for Pesticide Chemicals [Part 455] but discharges a pesticide that is not regulated by these effluent guidelines). The permit writer should make sure that the pollutant of concern is not already controlled by the effluent guideline and was not considered by the EPA when the Agency developed the effluent guideline.*"

In order to develop BPJ TBEL, POC should be determined first. The EPA Permit Writers Manual 5.2.1.2 informs staff to review the *Central Wastewater Treatment Category Technical Development Document*, Chapter 6, Figure 6-1 Pollutant of Concern Methodology (CWT Document). From the CWT Document, Figure 1 – How to Determine a POC has been created.

DRAFT

Appendix C: TBEL Determination (continued):

Figure 1 – How to Determine a POC

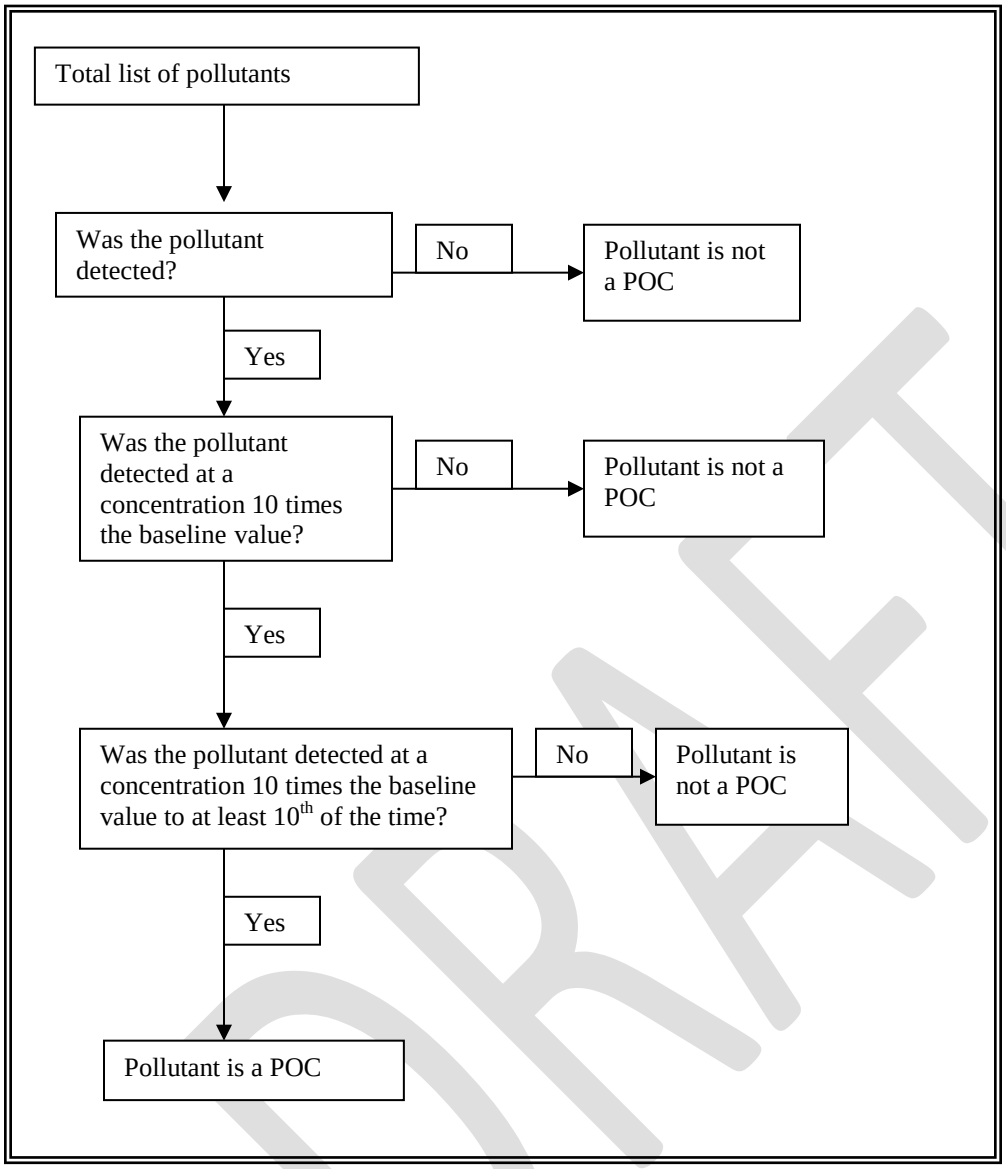

DRAFT

Baseline Values for the CWT Document are established in Chapter 15 of the same document. The baseline values for the potential POCs is located below. In accordance to Figure 1 and Chapter 6 of the CWT document, the baseline is multiplied by 10 prior to comparing with analyzed pollutants.

The below table documents the effluent samples from each of the applicable outfalls and the baseline values (x10) from Chapter 15. Outfalls #003 through #008 are not applicable to this review. Outfall #001 is once through cooling water. Outfall 002 is the process water and stormwater discharge from the ash ponds. Outfall 009 is an emergency discharge that is being established in this permit, but is the same as Outfall 002.

Appendix C- TBEL Determination (continued):

Table 1 below documents that Total Suspended Solids, total phosphorus, nitrate-nitrate, boron meet the initial determination of being POCs, based on the one sample taken as part of the expanded effluent testing completed with the renewal application. Total Suspended Solids are subject to an Effluent limit Guideline for Outfall 002, along with net credits to meet the ELG. The TSS effluent meets the ELG limit. Nitrate-nitrite and total phosphorus are identified as potential pollutant of concern and as a result of the changes to the Effluent Regulations in 10 CSR 20-7.015, the facility is being required to monitor total nitrogen and total phosphorus. Boron meets the criteria as a pollutant of concern, there shall be monitored quarterly from Outfall 002 for this permit cycle.

Boron is the parameter identified above that needs to go through the Technology based effluent process, as required in 40 CFR 125.3,. The technologies evaluated below have the potential to remove additional pollutants. The summary of factors that need to be considered in developing case by case TBELs are listed in Figure 2 from the NPDES Permit Writer's Manual.

Currently the Best Available Technology does not remove boron but merely concentrates the boron into another waste stream. The concentrate stream creates an even formidable disposal problem. Cost associated with this disposal will be prohibitive. This technology limitation is addressed by several factors in the case by case TBEL development.

The Department of Natural Resources' Water Protection Program has determined that the analysis contained in this Appendix C, regarding pollutants of concern is necessary to protect human health, public welfare, or the environment. In regards to boron, quarterly monitoring is required from Outfall 002.

DRAFT

Appendix C- TBEL Determination (continued):

Table 1: TBEL Determination

Parameter	Units	Outfall 001	Outfall 002	Baseline	Baseline*10	Background Concentration[i]	Potential
Biochemical Oxygen Demand	mg/L	1	3	2	20	1	NO
Chemical Oxygen Demand	mg/L	25.7	27.8	5	50	25.7	NO
Total organic Carbon	mg/L	3.8	3.8	1	10	3.7	NO
Total Suspended Solids	**mg/L**	**43**	**16**	**4**	**40**	**595**	**YES**
Ammonia	mg/L	0.08	0.01	0.05	0.5	0.03	NO
bromide	mg/L	2.78	0.25	NB	NB	2.5	NO
chlorine, total residual	mg/L	BA,NT	BA,NT	NB	NB	Nt	NB
fluoride	mg/L	BP,NT	0.58	0.1	1	0.68	NO
nitrate-nitrite	**mg/L**	**2.2**	**0.62**	**0.05**	**0.5**	**1.22**	**YES**
nitrogen, total organic	mg/L	0.55	0.61	NB	NB	0.62	NO
oil and grease	mg/L	1.8	0.3	5	50	1.5	NO
Phosphorus, total	**mg/L**	**0.24**	**1.14**	**0.01**	**0.1**	**0.37**	**YES**
sulfate	mg/L	66	57	NB	NB	116	NO
sulfide	mg/L	BA,NT	BA,NT	1	10	NT	YES
sulfite	mg/L	BA,NT	2	NB	NB	1.5	NO
surfactants	mg/L	0.004	0.14	NB	NB	0.05	NO
aluminum	mg/L	BP,NT	0.855	0.2	2	2.57	NO
barium	mg/L	0.4	0.212	0.2	2	0.122	NO
boron	**mg/L**	**0.22**	**1.15**	**0.1**	**1**	**0. 06**	**YES**
cobalt	mg/L	BA,NT	BA,NT	0.05	0.5	0.002	NO
iron	mg/L	BP,NT	0.536	0.1	1	2.31	NO
magnesium	mg/L	17.2	18.3	5	50	17.8	NO
molybdenum	mg/L	0.008	0.052	0.01	0.1	0.006	NO
manganese	mg/L	0.29	0.057	0.015	0.15	0.2	NO
tin	mg/L	BA,NT	BA,NT	0.03	0.3	NT	YES
titanium	mg/L	0.25	0.033	5	50	0.107	NO
antimony	µg/L	9	0.5	20	200	0.5	NO
arsenic, total	µg/L	16	0.5	10	100	2.4	NO
beryllium	µg/L	3	0.5	5	50	0.5	NO
cadmium, total	µg/L	2	0.5	5	50	2.9	NO
chromium, total	µg/L	23	4	10	100	5	NO
copper, total	µg/L	17	2	25	250	6.3	NO
lead, total	µg/L	12	0.5	50	500	0.5	NO
mercury, total	µg/L	0.025	0.5	0.2	2	0.5	NO
nickel, total	µg/L	27	4	40	400	8	NO
selenium, total	µg/L	2.5	0.5	5	50	1.67	NO
silver, total	µg/L	0.5	0.5	10	100	0.5	NO
thallium, total	µg/L	6	0.5	10	100	0.5	NO
zinc, total	µg/L	70	18	20	200	13.76	NO
cyanide, total	µg/L	7	2.5	20	200	2.5	NO
phenols, total	µg/L	2.5	2.5	50	500	2.5	NO

[i] = Background Concentrations were obtained from USGS Gauging Station Missouri River at Hermann, MO. 1969-2012(average value), or from Form C of the Renewal Application for those parameters not monitored at the gaging station.

BA, NT- believe absent, not tested

BP, NT-believe present, not tested. Are known to exist in the Missouri River, but not expected to include a contribution from the non-contact cooling water.

NB- no baseline

NT-not tested

DRAFT

Appendix C- TBEL Determination (continued):
Figure 2: Summary of factors in case by case TBEL development[1]

For BPT requirements (all pollutants)
- The age of equipment and facilities involved*
- The process(es) employed*
- The engineering aspects of the application of various types of control techniques*
- Process changes*
- Non-water quality environmental impact including energy requirements*
- The total cost of application of technology in relation to the effluent reduction benefits to be achieved from such application

For BCT requirements (conventional pollutants)
- All items in the BPT requirements indicated by an asterisk (*) above
- The reasonableness of the relationship between the costs of attaining a reduction in effluent and the derived effluent reduction benefits
- The comparison of the cost and level of reduction of such pollutants from the discharge of POTWs to the cost and level of reduction of such pollutants from a class or category of industrial sources

For BAT requirements (toxic and non-conventional pollutants)
- All items in the BPT requirements indicated by an asterisk (*) above
- The cost of achieving such effluent reduction

1. Age of Equipment
   The bottom ash pond was constructed at the beginning of plant operation in 1970 and does not contain a liner. It has a surface area of 154 acres, with a total storage capacity of 12,000 acre-ft and the current volume of stored ash is approximately 11,403 acre-ft. The fly ash pond is lined and was constructed in 1993. Its total surface area is 79 acres, with a total storage capacity of 1,900 acre-ft and the current volume of stored ash is approximately 1,353 acre-ft. Based on a historic review from 2006 through 2010, Labadie generated an average of 390,000 tons of fly ash and 166,000 tons of bottom ash yearly.

2. Process Employed
   Flows from the coal ash pile, low volume waste, fly ash, bottom ash, and the wastewater treatment plant flow into the ash ponds for retention, pH neutralization, and settling prior to discharge to the Missouri River. The source of the water for flows is the Missouri River water utilized in plant operations. The facility qualifies for intake credit since the source of the water is the Missouri River and it is returned to the Missouri River.

3. Engineering Aspects of application of various types of control techniques

   Transport to a wastewater treatment plant, would be taking the flows from Labadie Energy Center to the City of Labadie treatment plant or to transport flows to MSD Bissell Point, which does accept the sludge from Labadie's domestic wastewater treatment plant. This option is not preferable due to distance; having to pay for disposal, and Labadie and MSD Bissell Point not having the capacity to handle flows.

   Conventional water treatment (coagulation, sedimentation, and filtration) does not significantly remove boron, and special methods would have to be installed in order to remove boron from waters with high boron concentrations. The treatment technologies available for removal of boron are limited and have not changed from what was documented in a 1976 technology and economic study done by EPA on the removal of Boron from wastewater. Boron is extremely mobile in water and hard to remove. Lime precipitation and filtration was identified as a possible removal method in the 1976 EPA study along with reverse osmosis and ion exchange but was quickly eliminated as a viable treatment method due to less than 25% effectiveness in laboratory experiments[5].

   Reverse osmosis is a membrane-technology filtration method that removes large molecules and ions from solutions by applying pressure to the solution when it is on one side of a selective membrane. The result is that the solute is retained on the pressurized side of the membrane and the pure solvent is allowed to pass to the other side (see figure 3[2]). This process will require flow equalization, additional storage, sludge hauling, and addition of chemicals. Reverse osmosis will remove the majority of parameters found in the leachate from the leachate water; however from research on reverse osmosis for boron removal, the process will remove boron down to a range between 1.0 to 2.3 mg/L[3/4]. This is only a slight reduction in boron concentration, the benefits of which are substantially offset by the establishment of a new, more concentrated waste stream that will need to be collected and separately disposed of after the reverse osmosis treatment process.

Appendix C- TBEL Determination (continued):

Figure 3: Reverse Osmosis Plant Diagram[2]

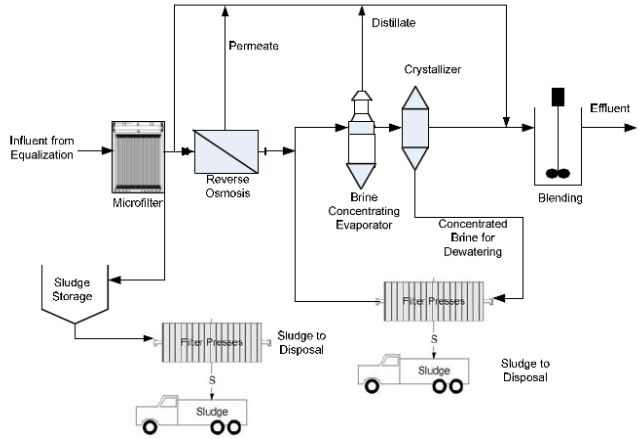

Ion Exchange is a water treatment method where undesirable contaminants are removed from water by exchange with another substance. Both the contaminant and the exchanged substance must be dissolved and have the same type of electrical charge (see figure 4[2]). This process will require flow equalization, additional storage, sludge hauling, and addition of chemicals. The ion exchange system will remove the majority of parameters found in the leachate from the leachate water; however from research on ion exchange systems for boron removal, the process will remove boron down to a range between 1.0 to 2.3 mg/L[3/4]. This is only a slight reduction in boron concentration, the benefits of which are substantially offset by the establishment of a new, more concentrated waste stream that will need to be collected and separately disposed of.

Figure 4: Ion Exchange Plant Diagram

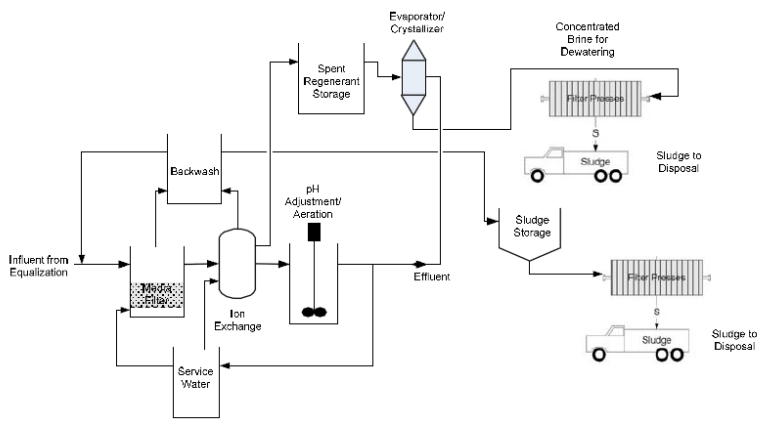

Electrocoagulation involves the generation of coagulants in situ by dissolving electrically either aluminum or iron ions from respectively aluminum or iron electrodes. The metal ion generation takes place at the anode; hydrogen gas is released from the cathode. Also, the hydrogen gas would help to float the flocculated particles out of the water. This process sometimes is called electroflocculation. The materials can be aluminum or iron in plate form or packed form of scraps such as steel turnings, millings, etc. In studies completed, the boron concentration in the influent was investigated with regards to energy consumption. The obtained results shown that increasing boron concentration increased conductivity of solution. Thus, solution with higher boron concentration had more ions at the same volume. The higher conductivity values decreased energy consumption. Thus with low boron concentrations, more energy is required to remove the initial boron concentration. Electrocoagulation has been shown to remove from 80% to over 90% of the initial boron concentrations; however those tests have been run at 12 mg/L to 1000 mg/L.[5/6] The use of an electrocoagulation system at a Vancouver ship yard at 25 gpm (36,000 gpd) batch discharge had an initial boron concentration of 4.9 mg/L had a reduction of 21% to 3.86 mg/L. Electrocoagulation requires high power consumption and maintenance, in replacement and cleaning of the electrodes.

Vapor Compression Evaporation is often referred to as a zero liquid discharge system. Vapor Compression Evaporation Systems typically consist of brine concentration in combination with forced circulation crystallizers. Vapor Compression Evaporation has been used to treat cooling tower blowdown at power plants since the 1970s. There are not plants in the country using vapor compression evaporation to treat utility waste landfill leachate and stormwater. Only one plant in the country is using vapor compression evaporation, Kansas City Power and Light- Iatan Unit 2 to treat flue gas desulfurization wastewater. That operation has only been in effect since 2010.[7/8] Treatment using a vapor compression evaporation system is usually accomplished in three steps: preconcentration of wastewater into a brine slurry using a brine concentratory, evaporation of the remaining water in the brine slurry using a forced-circulation crystallizer or spray dryer and dewatering of the resulting sludge using a filter press or centrifuge. The dewatered salt cake requires disposal at a classified landfill . Vapor compression evaporation systems require high energy demands with the brine concentrators and crystallizers. Using a vapor compression evaporator system has a high potentiol for scaling and corrosion, thus requiring a pretreatment upstream of brine concentrator to soften the wastewater. Softening the wastewater is usually accomplished by a reverse osmosis plant. Boron can interfer with the operation of the evaporation process by hindering the crystallization process, resulting in soldis that interefere with the crystallizers, thus special provisions are required. [7/8]

While chemical precipitation is not effective means of removing boron, it may work in removing molybdenum from wastewater. This can occur with the addition of ferric sulfate and lime for pH manipulation to get the molybdenum to flocculate out and settle.[11] The water can then be treated or discharged, while the cake formed from molybdenum will need dewatered and disposed of in a landfill.

4. Process changes

A potential process that Ameren could employ is conversion to a dry handling system or construction of a landfill for coal combustion residuals. Ameren has submitted a construction permit application to build a utility waste landfill for their ash to the department's Solid Waste Management Program on January 29, 2013.

5. Non-water quality environmental impacts including energy requirements

The non-water quality environmental impacts for installation of a treatment technology for boron or molybdenum removal are great in terms of energy required and creation of additional wastestreams.

- The reverse osmosis system requires flow equalization, brine addition, blending, crystallization, sludge dewatering, and sludge removal, which will increase electricity, gasoline consumption (for trucking concentrated boron solute annual operation and maintenance.
- The requirements for the ion exchange system are very similar to the reverse osmosis plant. Neither the reverse osmosis system nor the ion exchange system will significantly reduce the boron concentration currently present in the water; however both will create a new concentrated waste stream.
- Electrocoagulation requires high energy consumption along with higher operation and maintenance in the cleaning and replacement of the electrodes. Additional polymers may be required to get the floc to precipitate out.
- Vapor Compression Evaporation system is high power users, requiring 70 to 100 kW-hr per 1000 gallons. Besides the high power requirements, the vapor compression system requires disposal of a salt cake in a landfill and often requires the addition of a pretreatment reverse osmosis system to prevent scaling and corrosion of the evaporators and crystallizers. [7]
- Chemical Precipitation requires large amounts of chemicals, such as lime and ferric sulfate for removal of metals from the discharge.

6. Total cost of application of technology in relation to reduction in effluent

- The total cost of constructing a reverse osmosis system or an ion exchange system may result in the potential removal of 0.3 to 1.3 mg/L of boron from the ash pond system. The cost estimate for a reverse osmosis system for over 40,000 gpm (57 mgd) is more than $100 million (2010 dollars[2]). Besides the initial capital cost, the annual cost estimate to operate and maintain the reverse osmosis system is $1 million (2010 dollars[2]).

- The cost to construct and install an ion exchange system is more than $100 million (2010 dollars[2]). Besides the initial capital cost, the annual operating and maintenance cost estimate for an ion exchange plant is more than $1 million (2010 dollars[2]).

DRAFT

Appendix C- TBEL Determination (continued):

- Electrocoagulation has high operating costs due to its high energy requirements along with the replacement of electrodes. In the research completed by the department, a capital cost and or annual operating costs were not available. Electrocoagulation appears to work better in higher concentrations than in the lower concentrations present in this discharge.

- The capital costs associated with the installation and operation of vapor compression evaporator equipment includes brine concentrators, evaporators, and crystallizers. These components are constructed from expensive metals and metal alloys, such as titanium. The evaporators and crystallizers are high power users, requiring 70 to 100 kW-hr per 1000 gallons. [7]

- The cost for chemical precipitation for molybdenum removal was not found in the literature review conducted by the department.

7. Reasonableness of the cost of the application of technology and the removal of effluent

   The installation of a reverse osmosis plant, ion exchange system, vapor compression evaporator, or electrocoagulation has the potential to reduce the boron concentration down to 1.0 mg/L, along with a reduction in the molybdenum present. To achieve the reduction in concentrations, the plant would be required to spend more than $100 million to construct the system, plus an annual operating and maintenance cost of a million dollars.

   Boron's water quality standard is 2 mg/L (2,000 µg/L) is a drinking water standard and molybdenum do not have a water quality standard. The closest drinking water intake is Howard Bend WTP, 20 miles downstream of the Labadie Energy Center. The other metals and parameters in the TBEL POC determination (Figure 1) are not identified as needing a TBEL developed, or requiring a water quality based effluent limit, requiring Ameren Missouri to install a reverse osmosis, ion exchange system, vapor compression evaporator or electrocoagulation for the leachate from the landfill is neither reasonable or economically efficient.

   Ameren is already pursuing the option of an utility waste landfill to handle coal combustion residuals and to reduce flows from Outfall 002.

8. Comparison of cost and level of reduction

   Boron is currently present in the leachate at a concentration of 1.15 mg/L. The installation of a reverse osmosis plant or an ion exchange system has the potential to remove the boron concentration down to 1.0 mg/L. To achieve the reduction in boron concentrations, the plant would be required to spend over $100 million to construct the system, plus an annual operating and maintenance cost of $1 million. The installation of the treatment technologies does not appear to be a cost effective or practical option for the removal of 0.15mg/L of boron. Ameren is already pursuing the option of an utility waste landfill to handle coal combustion residuals and to reduce flows from Outfall 002.

9. Cost of achieving effluent reduction

   To utilize a reverse osmosis or an ion exchange system, the plant would be required to spend over $100 million to construct the system, plus an annual operating and maintenance cost of over $100 million. The vapor compression evaporator would cost even more as it could potentially require a reverse osmosis plant prior to the concentrators. The technologies capable of removing boron from the landfill leachate stream require a significant up-front investment and ongoing operating costs. Electrocoagulation may be more cost effective removal option; however it requires high operating and maintenance costs, along with a byproduct that will need disposed of. Ameren is already pursuing the option of an utility waste landfill to handle coal combustion residuals and to reduce flows from Outfall 002.

After applying factors 1, 2, 3, 4, 5, and 9 listed above, and considering the technologies and unique circumstances discussed above, the department has determined, based its best professional judgment, that establishing a monitoring-only requirement (Section 5.2.3.3 NPDES Permit Writers Manual) for boron and molybdenum in the MSOP is the most appropriate mechanism to carry out the provisions of the Clean Water Act at this time. The Department of Natural Resources' Water Protection Program has determined that the analysis contained in this Appendix C, regarding pollutants of concern is necessary to protect human health, public welfare, or the environment. In regards to boron, quarterly monitoring is required from Outfall 002.

DRAFT

Appendix C- TBEL Determination (continued):

References

1. EPA, Permit Writer's Manual, Chapter 5 Table 5-2, EPA-833-K-10-001 September 2010, http://www.epa.gov/npdes/pubs/pwm_chapt_05.pdf

2. North American Metals Council, Review of Available Technologies for the Removal of Selenium in Water, CH2MHill, 2010.

3. Watermechanique, http://www.watermechanique.com/

4. Lenntech, Water Treatment Solutions, http://www.lenntech.com/processes/desalination/post-treatment/post-treatments/boron-removal.htm

5. Ezerie Henry Ezechi, Mohamed Hasnain Isa and Shamsul Rahman Bin Mohamed Kutty, 2012. Boron in Produced Water: Challenges and Improvements: A Comprehensive Review. *Journal of Applied Sciences, 12: 402-415.* http://scialert.net/abstract/?doi=jas.2012.402.415

6. Alper Erdem YILMAZ, The Effects of Initial Boron Concentration on Energy Consumption in Boron Removal by Electrocoagulation

7. Smagula, William H. Letter to John King, Response to Informal EPA Request for Supplemental Information about Planned State of the Art, Flue Gas Desulfurization ("FGD") Wastewater Treatment System, dated October 8, 2010, http://www.epa.gov/region1/npdes/merrimackstation/pdfs/ar/AR-38.pdf

8. Smagula, William H. Letter to John King, Response to Information Request about Planned State of the Art Flue Gas Desulfurization Wastewater Treatment System, dated December 8, 2010; http://www.epa.gov/region1/npdes/merrimackstation/pdfs/ar/AR-40.pdf

9. EPRI, Treatment Technology Summary for Critical Pollutants of Concern in Power Plant Wastewaters, January 2007, http://earth1.epa.gov/region1/npdes/merrimackstation/pdfs/ar/AR-16.pdf

10. EPA, Chemical Technology and Economics in Environmental Perspectives Task II – Removal of Boron from Wastewater, Midwest Research Institute, April 1976

DRAFT

APPENDIX D: PRE-PUBLIC NOTICE COMMENTS RECEIVED

D-1: Comments received pre-public notice in 2012

Ameren was provided with a pre-public notice version of the permit on November 15, 2012. The department met with Ameren on December 14, 2012 to discuss the draft permit.

1. 316(a) Thermal Variance

   The proposed permit replaces the current generation-based heat rejection limits with two temperature-based "edge of mixing-zone" limitations. As explained in the Fact Sheet, MDNR acknowledges that Labadie Plant currently operates under a 316(a) variance. The purpose of a 316(a) variance is to provide relief when thermal standards are more restrictive than necessary. In the proposed permit the alternative standards implemented in response to the original variance are replaced with limits based on a new 29% mixing zone versus the default 25% included in 10 CSR 20 - 7.031(4)(D). This expanded mixing zone was derived by permit staff from a statistical analysis of historic data and does not reflect equivalency, or outcome of the original variance determination. Consequently, the new thermal standards proposed by the agency will restrict future operation of the plant. This is of particular concern to the company since Labadie Energy Center represents one of our major base load facilities with the plant responsible for the highest, total electrical energy production of any plant in our system.

   The original 316(a) demonstration concluded that the fishery both up and downstream of the Plant was in balance, even though Missouri's thermal water quality standards were not met under all Plant operating and Missouri River flow conditions. As noted by MDNR, a 316(a) variance was granted in 1977. However we note that this variance did not result in an expanded mixing zone (as described in the Fact Sheet), but instead resulted in two specific modifications to the NPDES permit. The first was elimination of the requirement for off-stream cooling. The second was the establishment of alternative thermal limitations, based on heat rejection as derived from electrical generation and thermodynamic calculations.

   In retrospect, the Plant has been in operation for over forty years and there has never been a fish kill associated with the thermal plume. This period of operation includes several significant and sustained periods of drought. While Ameren ceased biological monitoring at Labadie a number of years ago, our most recent data reveals no indication of adverse impacts. MDNR's assessment of both Ameren and agency data as part of the re-application review further concludes that "available data does not provide convincing evidence of greater numbers of fish upstream of the Labadie plant than downstream." Consequently, we feel the imposition of the newly proposed thermal standards represents an unjustified burden on the operation of the Labadie Energy Center.

   With deference to our stated position the company recognizes that the original 316(a) study is dated and we are also cognizant of the need to undertake more extensive aquatic assessments to either re-affirm the current variance or determine the need for alternative action. Consequently, we accept MDNR's position establishing a new 316(a) Biological Monitoring Program during the term of the next permit. We generally concur with the schedule laid out in the permit and believe it will allow adequate time to propose and agree on the scope, implement and collect two full years of field data, and analyze and present findings as part of the next permit reapplication. In light of the above considerations Ameren requests MDNR renew the existing heat rejection limits for the full term of the permit while the company conducts a biological monitoring program.

   The department is proposing to public notice the permit with the thermal discharge limits, along with monitoring of the stream, effluent temperature, and change in stream temperature. As part of this permit, Ameren is required to establish the biomonitoring program.

2. 316(b) Impingement and Entrainment Intake Structure Upgrades

   Since this comment was submitted, EPA promulgated a final rule implementing 316(b) requirements. Special condition #15 of this permit implements the relevant requirements found at 40 CFR 122.21, 40 CFR 125.94-98 and 40 CFR Subpart J.

3. Since this comment was submitted, EPA promulgated a final rule implementing 316(b) requirements. Special condition #16 of this permit implements the relevant requirements found at 40 CFR 122.21 and 40 CFR Subpart J.

DRAFT

Additional Monitoring to Support Technology Based Effluent Limitations

The revised draft includes a new Special Condition 24, "Additional Monitoring at Outfall 002". Based on prior communications, it appears that this costly two-year long data collection effort is intended to support development of 'Best Professional Judgment, Technology Based Effluent' ("TBEL") limits in the next round of permitting. Ameren does not believe this requirement is appropriate, first as it requires extensive monitoring for thirty-five parameters, in the absence of any preliminary data indicating concerns or likely environmental impacts. The department acknowledges this in its current review as only four parameters met your initial TBEL determination of being potential pollutants of concern.

Second, the new monitoring obligations occur during a period of transition in the operations of the ash ponds (the source of Outfall 002 effluent). The anticipated federal Coal Combustion Byproducts rules as well as the Steam Electric Effluent Guidelines are likely to significantly impact existing operations such that the contributing wastestreams, configuration, and effluent quality may be very different than with the existing operations. In addition, assuming MDNR authorizes the construction of Ameren's planned landfill additional changes to the existing ponds are likely. In light of these expected changes, implementation of new and/or expanded effluent monitoring programs would be premature and would not likely be representative of actual future discharges.

Further, the value of this additional monitoring and the TBEL evaluation it would presumably support, would be minimal in light of EPA's current schedule to comprehensively revise the Steam Electric Effluent Guidelines. The EPA's extensive assessment of our industry far exceeds the resources available to the department and the resulting rules will be implemented during the term of the renewed permit. There is no legitimate reason to expect that the Department's own Best Professional Judgment would reach different conclusions that merit establishment of limitations, other than those finalized by EPA.

Finally, in the event that the data in our next reapplication were to indicate one or more possible pollutants of concern, among the broad set of parameters tested, additional targeted sampling and analysis could be conducted. Such a targeted effort, to provide the additional data necessary to further investigate concerns raised by the initial sampling effort, would be far more appropriate and cost effective. We therefore request you delete Special Condition 24 requiring additional monitoring of Outfall 002.

The department acknowledges that new federal effluent limit guidelines are expected for Stream Electric Generating Plants and may cover discharges from the coal ash pond. The monitoring for boron is being required as they meet the requirements of the Technology Based Effluent determination. The department is required to conduct a technology based effluent determination when EPA has started the process of promulgating effluent guidelines, but not completed it. When the final effluent limit guidelines are established, Ameren can request a modification to the permit to reflect the revised effluent limit guidelines for discharges from coal ash ponds.

The department is required to make a technology based decision on the discharge, which the EPA guidance for technology based effluent limits is based on ten samples, not the one sample used currently in this permit to determine applicability. With the transition to the utility waste landfill that Ameren has submitted a construction permit application on, startup of operations at the landfill would be occurring at about the same time the draft permit begins the expanded sampling of Outfall 002. This permit allows for the modification and removal of this condition if the federal effluent limit guidelines are established and a modification is required for changes in flow, such as the establishment of the landfill. Besides the federal effluent limit guidelines or the technology based effluent limits determination, the department must also consider the water quality standards and what is protective of the receiving stream, the Missouri River.

DRAFT

D-2: Pre-public Notice Draft Comments

Ameren was provided with a pre-public notice version of the permit on November 21, 2014. Ameren provided clarification and typo comments on December 9, 2014 and technical comments on December 17, 2014. Below is a summary of the comments received and the Department's response.

From December 9th correspondence:

1. Typos, consistency of terms, and numbering has been corrected.
2. *Per Section A, Stormwater Outfalls 003-006 are covered by "Benchmarks"… and that the permit does not specify the frequency of sampling (for comparison to the benchmarks); although you clarified that semiannual was intended. Also, we discussed that the SWPPP (per SC #12), included a confusing statement/request: "This must include a list of potential contaminants and an annual estimate of amounts that will be used in described activities."*

   The permit condition has been revised to reflect the semi-annual monitoring requirement that was previously included. For the confusing statement, that statement has been removed from the draft operating permit as it was removed from the Department's draft permit template language.

3. *Section C, Special Condition 10 requires compliance with RCRA and CERCLA. We discussed that this condition would be modified to reference Ameren's documented use of sodium hydroxide and sulfuric acid in excess of the Reportable Quantities and exemption from reporting. See our permit application Attachment E (and similar precedent in other permits, such as Rush Island, MO-0000043, SC#7).*

   The permit condition has been updated to include the following statement, "Ameren is exempt from Clean Water Act, Section 311, reporting for sulfuric acid and sodium hydroxide as per 40 CFR 117.12."

From December 17th correspondence:

1. *We note that there is some inconsistency within the draft regarding timelines for various requirements, with some described in 'days' while others are in 'months'. We ask that months be specified for all such requirements to ensure uniformity.*

   The terminology has been updated to months, except for conditions requiring submittals in timeframes less than a month from an event occurring.

2. *Regarding the Total Residual Chlorine (TRC) monitoring obligations under the "Final Effluent Limits" for Outfall 02A (on page 5 of the draft permit); Ameren has elected to install UV disinfection technology on the STP and thus will not be adding chlorine. Therefore, we request deletion of the TRC monitoring requirements and Note 7, as neither of these requirements is relevant for facilities using UV disinfection.*

   The references to total residual chlorine for disinfection have been removed.

3. *Regarding the Chemical Oxygen Demand (COD) monitoring obligations for Outfalls 002 and 009, (on page 6 of the draft permit); to the extent that the proposed requirements are based on the TBEL analysis (in Appendix C of the Fact Sheet), they do not appear justified as noted in Table 1. If, alternatively they are based on some sort of general guidelines for industrial wastewater facilities or intended to provide additional 'baseline' information for further evaluation, we believe the weekly measurement frequency is excessive. We request that the COD monitoring requirements be deleted entirely or at a minimum revised to once per quarter.*

   The COD monitoring requirement for Outfall #002 was reduced to quarterly monitoring. For outfall #009, which is the emergency outfall it remains at once/discharge.

4. *Ameren is concerned that timelines under Special Condition 15 (on page 11 of the draft permit) do not account for possible agency inaction, as do others such as those under Section D, Schedule of Compliance. Thus while MDNR approvals of items like the "Site Characterization Workplan" are required, subsequent implementation dates are linked to the permit issuance date and as a result might require implementation actions with or without receipt of the "required" approvals. We request that timelines for actions conditioned on agency approvals, be linked to the approval dates (which are beyond our control) rather than a fixed schedule based on permit issuance.*

   Special Condition #15 is the 316(b) Compliance schedule. The draft permit condition does not include specific approval dates beyond what is in the federal rules in 40 CFR 122.21 and 125.94-98. The Department did not want to specify specific dates in the event the pending lawsuits change or throwout time schedules and then the operating permit may contain requirements that do not match what the federal law requires. The Department is committed to keeping projects and studies moving and to minimize inaction and confusion up front. Also 40 CFR 125.98(c) allows the Department to stagger schedules for upgrades

DRAFT

and studies, which the Department will entertain for specific facilities as the development of plans and schedules are developed to meet the 316(b) studies required at Labadie.

5. *Section D, Schedule of Compliance – Thermal Discharge (on page 13 of the draft permit):*
    a. *Regarding 2(c), and the list of study elements, we request the following revisions:*
        i. *In "(1) a population typically characterized by diversity at all trophic levels;" we suggest "substitution of "an aquatic community" for "a population" and*
        ii. *in "(2) the capacity to sustain itself through cyclic seasonal changes;" we suggest insertion of the phrase "of the community" after the word "capacity"*
    b. *Regarding 2(g), we suggest insertion of the word "status" after the word "Annual", thus the sentence would begin with "Annual status reports . . .".*
    c. *We request insertion of the following caveat as a new item "4":*
    "Following completion of these studies and the submittal of a renewal application, Ameren reserves the right to seek a variance from listed thermal effluent limitations. Such variance could include alternative measurement methodologies or criteria, alternative thermal effluent limitations or an alternative schedule to implement physical and/or operational modifications as may be warranted. Based upon the results of the aquatic community studies, Ameren's renewal application submittal and the time necessary for agency(s) review to reach a final determination, the deadline for compliance with the final thermal effluent limitations may be modified accordingly."

    The requested changes were made.

6. *Special Condition 9 (on page 9 of the draft permit) requires monitoring of secondary containment waters, upon release. The focus of this monitoring is unambiguously, to detect the presence of hydrocarbons. Yet the monitoring frequency is unclear; it can be read to be once per quarter – only when the presence of hydrocarbons is indicated (by odor or sheens), or alternatively once per quarter without regard to suspected presence. We believe monitoring should only be required if hydrocarbons are suspected present. We suggest the following revised text: "This water must be tested for Total Petroleum Hydrocarbons (TPH) prior to discharge only when the presence of hydrocarbons is indicated, however when indicated, monitoring shall be conducted at least once per quarter in which such discharges occur."*

    This language has been updated to the most recent draft template language which removes the monitoring frequency.

7. *Finally, we note that the Fact Sheet contains copious details regarding Labadie Plant that are clearly from sources other than the NPDES permit application. Please note that we have not attempted to document the source of this information nor validate its accuracy.*

    The Department acknowledges the fact sheet includes information not included in the Labadie renewal application; however the Department chose to include this information to tell the story of the complexity of the Labadie renewal, other issues that are onsite that may not relate completely to the permit renewal, and to show the interaction and input with other agencies in developing this permit renewal. The renewal attempts to identify where the external information in the fact sheet comes from.

DRAFT

APPENDIX E: PUBLIC NOTICE COMMENTS RECEIVED

The draft Operating Permit for Ameren Labadie was previously public noticed in 2013. During the public comment period, comments were received. Anyone wanting copies of comments received may submit a Sunshine request; however the comments are summarized below.

1. **Request for a public hearing.** This draft permit is being placed on public notice again at which time additional public input will be gathered.

2. **Request Ameren start groundwater monitoring as soon as possible, not within the timeframe in the draft operating permit.** The department feels it is necessary to complete the detailed site characterization prior to initiating groundwater sampling. The purpose of this delay is to ensure that we gather representative data that can be used to make decisions about the nature and extent of discharges to waters of the state.

3. **Not grant the 316(a) variance.** At this time, the department does not have the information necessary to revoke the 316(a) variance. The department has determined that the appropriate path for updating the temperature requirements in this permit is to apply the previously granted 316(a) effluent limits as interim effluent limits, while Ameren does the required studies for the 316(b) rules in 40 CFR 122.21 and 40 CFR 125.94-98. The Department is providing a ten year schedule of compliance to allow Ameren the time to complete the studies and then to establish the best technology to meet entrainment, impingement and thermal limits. The establishment of interim limits does not limit Ameren from requesting a 316(a) variance in the future. Ameren is being required to conduct additional monitoring and update the thermal study. The department will provide close oversight of the study to ensure the information is collected that is necessary to make a determination on the appropriate temperature or thermal limits upon renewal.

4. **Limit the toxics that Ameren can dump into the Missouri River.** This draft appropriately limits all pollutants that have the potential to exceed Missouri's water quality standards.

5. **Comply with Clean Water Act and issue Ameren a permit that limits its water pollution for the sake of the environmental and public health.** This draft appropriately limits all pollutants that have the potential to exceed Missouri's water quality standards. While there may be discharges of other parameters, the department must follow the Water Quality Standards and the EPA's Technical Support Document when evaluating parameters and assigning water quality based effluent limits.

DRAFT

STANDARD CONDITIONS FOR NPDES PERMITS
ISSUED BY
THE MISSOURI DEPARTMENT OF NATURAL RESOURCES
MISSOURI CLEAN WATER COMMISSION
REVISED
AUGUST 1, 2014

These Standard Conditions incorporate permit conditions as required by 40 CFR 122.41 or other applicable state statutes or regulations. These minimum conditions apply unless superseded by requirements specified in the permit.

Part I – General Conditions
Section A – Sampling, Monitoring, and Recording

1. **Sampling Requirements.**
   a. Samples and measurements taken for the purpose of monitoring shall be representative of the monitored activity.
   b. All samples shall be taken at the outfall(s) or Missouri Department of Natural Resources (Department) approved sampling location(s), and unless specified, before the effluent joins or is diluted by any other body of water or substance.

2. **Monitoring Requirements**.
   a. Records of monitoring information shall include:
      i. The date, exact place, and time of sampling or measurements;
      ii. The individual(s) who performed the sampling or measurements;
      iii. The date(s) analyses were performed;
      iv. The individual(s) who performed the analyses;
      v. The analytical techniques or methods used; and
      vi. The results of such analyses.
   b. If the permittee monitors any pollutant more frequently than required by the permit at the location specified in the permit using test procedures approved under 40 CFR Part 136, or another method required for an industry-specific waste stream under 40 CFR subchapters N or O, the results of such monitoring shall be included in the calculation and reported to the Department with the discharge monitoring report data (DMR) submitted to the Department pursuant to Section B, paragraph 7.

3. **Sample and Monitoring Calculations.** Calculations for all sample and monitoring results which require averaging of measurements shall utilize an arithmetic mean unless otherwise specified in the permit.

4. **Test Procedures**. The analytical and sampling methods used shall conform to the reference methods listed in 10 CSR 20-7.015 unless alternates are approved by the Department. The facility shall use sufficiently sensitive analytical methods for detecting, identifying, and measuring the concentrations of pollutants. The facility shall ensure that the selected methods are able to quantify the presence of pollutants in a given discharge at concentrations that are low enough to determine compliance with Water Quality Standards in 10 CSR 20-7.031 or effluent limitations unless provisions in the permit allow for other alternatives. A method is "sufficiently sensitive" when; 1) the method minimum level is at or below the level of the applicable water quality criterion for the pollutant or, 2) the method minimum level is above the applicable water quality criterion, but the amount of pollutant in a facility's discharge is high enough that the method detects and quantifies the level of pollutant in the discharge, or 3) the method has the lowest minimum level of the analytical methods approved under 10 CSR 20-7.015. These methods are also required for parameters that are listed as monitoring only, as the data collected may be used to determine if limitations need to be established. A permittee is responsible for working with their contractors to ensure that the analysis performed is sufficiently sensitive.

5. **Record Retention.** Except for records of monitoring information required by the permit related to the permittee's sewage sludge use and disposal activities, which shall be retained for a period of at least five (5) years (or longer as required by 40 CFR part 503), the permittee shall retain records of all monitoring information, including all calibration and maintenance records and all original strip chart recordings for continuous monitoring instrumentation, copies of all reports required by the permit, and records of all data used to complete the application for the permit, for a period of at least three (3) years from the date of the sample, measurement, report or application. This period may be extended by request of the Department at any time.

6. **Illegal Activities.**
   a. The Federal Clean Water Act provides that any person who falsifies, tampers with, or knowingly renders inaccurate any monitoring device or method required to be maintained under the permit shall, upon conviction, be punished by a fine of not more than $10,000, or by imprisonment for not more than two (2) years, or both. If a conviction of a person is for a violation committed after a first conviction of such person under this paragraph, punishment is a fine of not more than $20,000 per day of violation, or by imprisonment of not more than four (4) years, or both.
   b. The Missouri Clean Water Law provides that any person or who falsifies, tampers with, or knowingly renders inaccurate any monitoring device or method required to be maintained pursuant to sections 644.006 to 644.141 shall, upon conviction, be punished by a fine of not more than $10,000, or by imprisonment for not more than six (6) months, or by both. Second and successive convictions for violation under this paragraph by any person shall be punished by a fine of not more than $50,000 per day of violation, or by imprisonment for not more than two (2) years, or both.

Section B – Reporting Requirements

1. **Planned Changes.**
   a. The permittee shall give notice to the Department as soon as possible of any planned physical alterations or additions to the permitted facility when:
      i. The alteration or addition to a permitted facility may meet one of the criteria for determining whether a facility is a new source in 40 CFR 122.29(b); or
      ii. The alteration or addition could significantly change the nature or increase the quantity of pollutants discharged. This notification applies to pollutants which are subject neither to effluent limitations in the permit, nor to notification requirements under 40 CFR 122.42(a)(1);
      iii. The alteration or addition results in a significant change in the permittee's sludge use or disposal practices, and such alteration, addition, or change may justify the application of permit conditions that are different from or absent in the existing permit, including notification of additional use or disposal sites not reported during the permit application process or not reported pursuant to an approved land application plan;
      iv. Any facility expansions, production increases, or process modifications which will result in a new or substantially different discharge or sludge characteristics must be reported to the Department 60 days before the facility or process modification begins. Notification may be accomplished by application for a new permit. If the discharge does not violate effluent limitations specified in the permit, the facility is to submit a notice to the Department of the changed discharge at least 30 days before such changes. The Department may require a construction permit and/or permit modification as a result of the proposed changes at the facility.

2. **Non-compliance Reporting.**
   a. The permittee shall report any noncompliance which may endanger health or the environment. Relevant information shall be provided orally or via the current electronic method approved by the Department, within 24 hours from the time the permittee becomes aware of the circumstances, and shall be reported to the appropriate Regional Office during normal business hours or the Environmental Emergency Response hotline at 573-634-2436 outside of normal business hours. A written submission shall also be provided within five (5) business days of the time the permittee becomes aware of the circumstances. The written submission shall contain a description of the noncompliance and its cause; the period of noncompliance, including exact dates and times, and if the noncompliance has not been corrected, the anticipated time it is expected to continue; and steps taken or planned to reduce, eliminate, and prevent reoccurrence of the noncompliance.

b. The following shall be included as information which must be reported within 24 hours under this paragraph.
   i. Any unanticipated bypass which exceeds any effluent limitation in the permit.
   ii. Any upset which exceeds any effluent limitation in the permit.
   iii. Violation of a maximum daily discharge limitation for any of the pollutants listed by the Department in the permit required to be reported within 24 hours.
c. The Department may waive the written report on a case-by-case basis for reports under paragraph 2. b. of this section if the oral report has been received within 24 hours.

3. **Anticipated Noncompliance**. The permittee shall give advance notice to the Department of any planned changes in the permitted facility or activity which may result in noncompliance with permit requirements. The notice shall be submitted to the Department 60 days prior to such changes or activity.

4. **Compliance Schedules.** Reports of compliance or noncompliance with, or any progress reports on, interim and final requirements contained in any compliance schedule of the permit shall be submitted no later than 14 days following each schedule date. The report shall provide an explanation for the instance of noncompliance and a proposed schedule or anticipated date, for achieving compliance with the compliance schedule requirement.

5. **Other Noncompliance.** The permittee shall report all instances of noncompliance not reported under paragraphs 2, 3, and 6 of this section, at the time monitoring reports are submitted. The reports shall contain the information listed in paragraph 2. a. of this section.

6. **Other Information**. Where the permittee becomes aware that it failed to submit any relevant facts in a permit application, or submitted incorrect information in a permit application or in any report to the Department, it shall promptly submit such facts or information.

7. **Discharge Monitoring Reports.**
   a. Monitoring results shall be reported at the intervals specified in the permit.
   b. Monitoring results must be reported to the Department via the current method approved by the Department, unless the permittee has been granted a waiver from using the method. If the permittee has been granted a waiver, the permittee must use forms provided by the Department.
   c. Monitoring results shall be reported to the Department no later than the 28th day of the month following the end of the reporting period.

Section C – Bypass/Upset Requirements

1. **Definitions.**
   a. *Bypass*: the intentional diversion of waste streams from any portion of a treatment facility.
   b. *Severe Property Damage*: substantial physical damage to property, damage to the treatment facilities which causes them to become inoperable, or substantial and permanent loss of natural resources which can reasonably be expected to occur in the absence of a bypass. Severe property damage does not mean economic loss caused by delays in production.
   c. *Upset*: an exceptional incident in which there is unintentional and temporary noncompliance with technology based permit effluent limitations because of factors beyond the reasonable control of the permittee. An upset does not include noncompliance to the extent caused by operational error, improperly designed treatment facilities, inadequate treatment facilities, lack of preventive maintenance, or careless or improper operation.

2. **Bypass Requirements.**
   a. Bypass not exceeding limitations. The permittee may allow any bypass to occur which does not cause effluent limitations to be exceeded, but only if it also is for essential maintenance to assure efficient operation. These bypasses are not subject to the provisions of paragraphs 2. b. and 2. c. of this section.
   b. Notice.
      i. Anticipated bypass. If the permittee knows in advance of the need for a bypass, it shall submit prior notice, if possible at least 10 days before the date of the bypass.
      ii. Unanticipated bypass. The permittee shall submit notice of an unanticipated bypass as required in Section B – Reporting Requirements, paragraph 5 (24-hour notice).
   c. Prohibition of bypass.
      i. Bypass is prohibited, and the Department may take enforcement action against a permittee for bypass, unless:
         1. Bypass was unavoidable to prevent loss of life, personal injury, or severe property damage;
         2. There were no feasible alternatives to the bypass, such as the use of auxiliary treatment facilities, retention of untreated wastes, or maintenance during normal periods of equipment downtime. This condition is not satisfied if adequate back-up equipment should have been installed in the exercise of reasonable engineering judgment to prevent a bypass which occurred during normal periods of equipment downtime or preventive maintenance; and
         3. The permittee submitted notices as required under paragraph 2. b. of this section.
      ii. The Department may approve an anticipated bypass, after considering its adverse effects, if the Department determines that it will meet the three (3) conditions listed above in paragraph 2. c. i. of this section.

3. **Upset Requirements.**
   a. Effect of an upset. An upset constitutes an affirmative defense to an action brought for noncompliance with such technology based permit effluent limitations if the requirements of paragraph 3. b. of this section are met. No determination made during administrative review of claims that noncompliance was caused by upset, and before an action for noncompliance, is final administrative action subject to judicial review.
   b. Conditions necessary for a demonstration of upset. A permittee who wishes to establish the affirmative defense of upset shall demonstrate, through properly signed, contemporaneous operating logs, or other relevant evidence that:
      i. An upset occurred and that the permittee can identify the cause(s) of the upset;
      ii. The permitted facility was at the time being properly operated; and
      iii. The permittee submitted notice of the upset as required in Section B – Reporting Requirements, paragraph 2. b. ii. (24-hour notice).
      iv. The permittee complied with any remedial measures required under Section D – Administrative Requirements, paragraph 4.
   c. Burden of proof. In any enforcement proceeding, the permittee seeking to establish the occurrence of an upset has the burden of proof.

Section D – Administrative Requirements

1. **Duty to Comply.** The permittee must comply with all conditions of this permit. Any permit noncompliance constitutes a violation of the Missouri Clean Water Law and Federal Clean Water Act and is grounds for enforcement action; for permit termination, revocation and reissuance, or modification; or denial of a permit renewal application.
   a. The permittee shall comply with effluent standards or prohibitions established under section 307(a) of the Federal Clean Water Act for toxic pollutants and with standards for sewage sludge use or disposal established under section 405(d) of the CWA within the time provided in the regulations that establish these standards or prohibitions or standards for sewage sludge use or disposal, even if the permit has not yet been modified to incorporate the requirement.
   b. The Federal Clean Water Act provides that any person who violates section 301, 302, 306, 307, 308, 318 or 405 of the Act, or any permit condition or limitation implementing any such sections in a permit issued under section 402, or any requirement imposed in a pretreatment program approved under sections 402(a)(3) or 402(b)(8) of the Act, is subject to a civil penalty not to exceed $25,000 per day for each violation. The Federal Clean Water Act provides that any person who negligently violates sections 301, 302, 306, 307, 308, 318, or 405 of the Act, or any condition or limitation implementing any of such sections in a permit issued under section 402 of the Act, or any requirement

imposed in a pretreatment program approved under section 402(a)(3) or 402(b)(8) of the Act, is subject to criminal penalties of $2,500 to $25,000 per day of violation, or imprisonment of not more than one (1) year, or both. In the case of a second or subsequent conviction for a negligent violation, a person shall be subject to criminal penalties of not more than $50,000 per day of violation, or by imprisonment of not more than two (2) years, or both. Any person who knowingly violates such sections, or such conditions or limitations is subject to criminal penalties of $5,000 to $50,000 per day of violation, or imprisonment for not more than three (3) years, or both. In the case of a second or subsequent conviction for a knowing violation, a person shall be subject to criminal penalties of not more than $100,000 per day of violation, or imprisonment of not more than six (6) years, or both. Any person who knowingly violates section 301, 302, 303, 306, 307, 308, 318 or 405 of the Act, or any permit condition or limitation implementing any of such sections in a permit issued under section 402 of the Act, and who knows at that time that he thereby places another person in imminent danger of death or serious bodily injury, shall, upon conviction, be subject to a fine of not more than $250,000 or imprisonment of not more than 15 years, or both. In the case of a second or subsequent conviction for a knowing endangerment violation, a person shall be subject to a fine of not more than $500,000 or by imprisonment of not more than 30 years, or both. An organization, as defined in section 309(c)(3)(B)(iii) of the CWA, shall, upon conviction of violating the imminent danger provision, be subject to a fine of not more than $1,000,000 and can be fined up to $2,000,000 for second or subsequent convictions.

c. Any person may be assessed an administrative penalty by the EPA Director for violating section 301, 302, 306, 307, 308, 318 or 405 of this Act, or any permit condition or limitation implementing any of such sections in a permit issued under section 402 of this Act. Administrative penalties for Class I violations are not to exceed $10,000 per violation, with the maximum amount of any Class I penalty assessed not to exceed $25,000. Penalties for Class II violations are not to exceed $10,000 per day for each day during which the violation continues, with the maximum amount of any Class II penalty not to exceed $125,000.

d. It is unlawful for any person to cause or permit any discharge of water contaminants from any water contaminant or point source located in Missouri in violation of sections 644.006 to 644.141 of the Missouri Clean Water Law, or any standard, rule or regulation promulgated by the commission. In the event the commission or the director determines that any provision of sections 644.006 to 644.141 of the Missouri Clean Water Law or standard, rules, limitations or regulations promulgated pursuant thereto, or permits issued by, or any final abatement order, other order, or determination made by the commission or the director, or any filing requirement pursuant to sections 644.006 to 644.141 of the Missouri Clean Water Law or any other provision which this state is required to enforce pursuant to any federal water pollution control act, is being, was, or is in imminent danger of being violated, the commission or director may cause to have instituted a civil action in any court of competent jurisdiction for the injunctive relief to prevent any such violation or further violation or for the assessment of a penalty not to exceed $10,000 per day for each day, or part thereof, the violation occurred and continues to occur, or both, as the court deems proper. Any person who willfully or negligently commits any violation in this paragraph shall, upon conviction, be punished by a fine of not less than $2,500 nor more than $25,000 per day of violation, or by imprisonment for not more than one year, or both. Second and successive convictions for violation of the same provision of this paragraph by any person shall be punished by a fine of not more than $50,000 per day of violation, or by imprisonment for not more than two (2) years, or both.

2. **Duty to Reapply.**
   a. If the permittee wishes to continue an activity regulated by this permit after the expiration date of this permit, the permittee must apply for and obtain a new permit.
   b. A permittee with a currently effective site-specific permit shall submit an application for renewal at least 180 days before the expiration date of the existing permit, unless permission for a later date has been granted by the Department. (The Department shall not grant permission for applications to be submitted later than the expiration date of the existing permit.)
   c. A permittees with currently effective general permit shall submit an application for renewal at least 30 days before the existing permit expires, unless the permittee has been notified by the Department that an earlier application must be made. The Department may grant permission for a later submission date. (The Department shall not grant permission for applications to be submitted later than the expiration date of the existing permit.)

3. **Need to Halt or Reduce Activity Not a Defense.** It shall not be a defense for a permittee in an enforcement action that it would have been necessary to halt or reduce the permitted activity in order to maintain compliance with the conditions of this permit.

4. **Duty to Mitigate.** The permittee shall take all reasonable steps to minimize or prevent any discharge or sludge use or disposal in violation of this permit which has a reasonable likelihood of adversely affecting human health or the environment.

5. **Proper Operation and Maintenance**. The permittee shall at all times properly operate and maintain all facilities and systems of treatment and control (and related appurtenances) which are installed or used by the permittee to achieve compliance with the conditions of this permit. Proper operation and maintenance also includes adequate laboratory controls and appropriate quality assurance procedures. This provision requires the operation of back-up or auxiliary facilities or similar systems which are installed by a permittee only when the operation is necessary to achieve compliance with the conditions of the permit.

6. **Permit Actions.**
   a. Subject to compliance with statutory requirements of the Law and Regulations and applicable Court Order, this permit may be modified, suspended, or revoked in whole or in part during its term for cause including, but not limited to, the following:
      i. Violations of any terms or conditions of this permit or the law;
      ii. Having obtained this permit by misrepresentation or failure to disclose fully any relevant facts;
      iii. A change in any circumstances or conditions that requires either a temporary or permanent reduction or elimination of the authorized discharge; or
      iv. Any reason set forth in the Law or Regulations.
   b. The filing of a request by the permittee for a permit modification, revocation and reissuance, or termination, or a notification of planned changes or anticipated noncompliance does not stay any permit condition.

7. **Permit Transfer.**
   a. Subject to 10 CSR 20-6.010, an operating permit may be transferred upon submission to the Department of an application to transfer signed by the existing owner and the new owner, unless prohibited by the terms of the permit. Until such time the permit is officially transferred, the original permittee remains responsible for complying with the terms and conditions of the existing permit.
   b. The Department may require modification or revocation and reissuance of the permit to change the name of the permittee and incorporate such other requirements as may be necessary under the Missouri Clean Water Law or the Federal Clean Water Act.
   c. The Department, within 30 days of receipt of the application, shall notify the new permittee of its intent to revoke or reissue or transfer the permit.

8. **Toxic Pollutants.** The permittee shall comply with effluent standards or prohibitions established under section 307(a) of the Federal Clean Water Act for toxic pollutants and with standards for sewage sludge use or disposal established under section 405(d) of the Federal Clean Water Act within the time provided in the regulations that establish these standards or prohibitions or standards for sewage sludge use or disposal, even if the permit has not yet been modified to incorporate the requirement.

9. **Property Rights.** This permit does not convey any property rights of any sort, or any exclusive privilege.

10. **Duty to Provide Information.** The permittee shall furnish to the Department, within a reasonable time, any information which the Department may request to determine whether cause exists for modifying, revoking and reissuing, or terminating this permit or to determine compliance with this permit. The permittee shall also furnish to the Department upon request, copies of records required to be kept by this permit.

11. **Inspection and Entry.** The permittee shall allow the Department, or an authorized representative (including an authorized contractor acting as a representative of the Department), upon presentation of credentials and other documents as may be required by law, to:
    a. Enter upon the permittee's premises where a regulated facility or activity is located or conducted, or where records must be kept under the conditions of the permit;
    b. Have access to and copy, at reasonable times, any records that must be kept under the conditions of this permit;
    c. Inspect at reasonable times any facilities, equipment (including monitoring and control equipment), practices, or operations regulated or required under this permit; and
    d. Sample or monitor at reasonable times, for the purposes of assuring permit compliance or as otherwise authorized by the Federal Clean Water Act or Missouri Clean Water Law, any substances or parameters at any location.

12. **Closure of Treatment Facilities.**
    a. Persons who cease operation or plan to cease operation of waste, wastewater, and sludge handling and treatment facilities shall close the facilities in accordance with a closure plan approved by the Department.
    b. Operating Permits under 10 CSR 20-6.010 or under 10 CSR 20-6.015 are required until all waste, wastewater, and sludges have been disposed of in accordance with the closure plan approved by the Department and any disturbed areas have been properly stabilized. Disturbed areas will be considered stabilized when perennial vegetation, pavement, or structures using permanent materials cover all areas that have been disturbed. Vegetative cover, if used, shall be at least 70% plant density over 100% of the disturbed area.

13. **Signatory Requirement.**
    a. All permit applications, reports required by the permit, or information requested by the Department shall be signed and certified. (See 40 CFR 122.22 and 10 CSR 20-6.010)
    b. The Federal Clean Water Act provides that any person who knowingly makes any false statement, representation, or certification in any record or other document submitted or required to be maintained under this permit, including monitoring reports or reports of compliance or non-compliance shall, upon conviction, be punished by a fine of not more than $10,000 per violation, or by imprisonment for not more than six (6) months per violation, or by both.
    c. The Missouri Clean Water Law provides that any person who knowingly makes any false statement, representation or certification in any application, record, report, plan, or other document filed or required to be maintained pursuant to sections 644.006 to 644.141 shall, upon conviction, be punished by a fine of not more than ten thousand dollars, or by imprisonment for not more than six months, or by both.

14. **Severability.** The provisions of the permit are severable, and if any provision of the permit, or the application of any provision of the permit to any circumstance, is held invalid, the application of such provision to other circumstances, and the remainder of the permit, shall not be affected thereby.

Ameren

Ameren Services

December 20, 2011

RECEIVED

DEC 28 2011

WATER PROTECTION PROGRAM

Curtis B. Gateley
Chief NPDES Permits Unit
Water Protection Program
Missouri Department of Natural Resources
P.O. Box 176
Jefferson City, Missouri 65102

ATTN: NPDES Permits and Engineering Section
Updated NPDES Permit MO-0004812 Renewal Application
Ameren Missouri's Labadie Energy Center

Dear Mr. Gateley:

Earlier this year, Ameren voluntarily agreed to submit an NPDES permit re-application for the Labadie Energy Center at the request of the agency. Attached is an updated renewal application incorporating relevant changes which have occurred since our prior application of September 1998.

We note that we initiated efforts to collect effluent samples in October and successfully obtained samples from outfalls 001, 002, 002a, 003 and 004. These data are included in the attached reapplication. To date we have been unable to collect samples from the remaining stormwater outfalls: 005, 006, 007 and 008. We have a limited number of automated samplers for storm water characterization and note that these samples are challenging to acquire from low flow, intermittent discharges such as these. While the winter weather presents additional challenges, we will continue to attempt to sample Outfalls 005 and 006. We believe data collected from Outfall 006 will be reasonably representative of Outfalls 007 and 008 (which generate even lower discharge flows). We will submit this data as it becomes available.

As always, we are available to respond to questions regarding this application or to discuss potential changes to the current permit conditions. We would appreciate the opportunity to review any substantive changes made by MDNR prior to issuance of a public noticed draft permit.

Sincerely,

John C. Pozzo
Managing Supervisor
Water Quality

RECEIVED
DEC 28 2011
WATER PROTECTION PROGRAM

TO RENEW PERMIT.

MISSOURI DEPARTMENT OF NATURAL RESOURCES
WATER PROTECTION PROGRAM, WATER POLLUTION CONTROL BRANCH
FORM A – APPLICATION FOR CONSTRUCTION OR OPERATING PERMIT UNDER MISSOURI CLEAN WATER LAW

FOR AGENCY USE ONLY	
CHECK NUMBER NONE SENT	
DATE RECEIVED 12/28/11	FEE SUBMITTED Ø

Note ▶ PLEASE READ THE ACCOMPANYING INSTRUCTIONS BEFORE COMPLETING THIS FORM.

1. This application is for:

- ☐ An operating permit and antidegradation review public notice
- ☐ A construction permit following an appropriate operating permit and antidegradation review public notice
- ☐ A construction permit and concurrent operating permit and antidegradation review public notice
- ☐ A construction permit (submitted before Aug. 30, 2008 or antidegradation review is not required)
- ☐ An operating permit for a new or unpermitted facility — Construction Permit # _____
- ☑ An operating permit renewal: permit # MO- 0004812 — Expiration Date 3/17/1999
- ☐ An operating permit modification: permit # MO-_____ — Reason: _____

1.1 Is the appropriate fee included with the application? (See instructions for appropriate fee) ☐ YES ☐ NO

2. FACILITY

NAME		TELEPHONE WITH AREA CODE	
Ameren Missouri, Labadie Energy Center		(314) 992-8201	
		FAX	
ADDRESS (PHYSICAL)	CITY	STATE	ZIP CODE
226 Labadie Power Plant Rd	Labadie	MO	63055

3. OWNER

NAME	E-MAIL ADDRESS	TELEPHONE WITH AREA CODE	
Union Electric Company d/b/a Ameren Missouri	mlmenne@ameren.c	(314) 554-2816	
		FAX (314) 554-4182	
ADDRESS (MAILING)	CITY	STATE	ZIP CODE
1901 Chouteau Ave., PO Box 66149, MC 602	St. Louis	MO	63166-6149

3.1 Request review of draft permit prior to public notice? ☑ YES ☐ NO

4. CONTINUING AUTHORITY

NAME		TELEPHONE WITH AREA CODE	
SAME			
		FAX	
ADDRESS (MAILING)	CITY	STATE	ZIP CODE

5. OPERATOR

NAME	CERTIFICATE NUMBER	TELEPHONE WITH AREA CODE	
SAME			
		FAX	
ADDRESS (MAILING)	CITY	STATE	ZIP CODE

6. FACILITY CONTACT

NAME	TITLE	TELEPHONE WITH AREA CODE
David Strubberg	Manager, Labadie Plant	(314) 992-8201
		FAX

7. ADDITIONAL FACILITY INFORMATION

7.1 Legal Description of Outfalls. (Attach additional sheets if necessary.) SEE ATTACHED

001 _____¼ _____¼ Sec _____ T _____ R _____ _____ County
UTM Coordinates Easting (X):_____ Northing (Y): _____
For Universal Transverse Mercator (UTM), Zone 15 North referenced to North American Datum 1983 (NAD83)
002 _____¼ _____¼ Sec _____ T _____ R _____ _____ County
UTM Coordinates Easting (X): _____ Northing (Y): _____
003 _____¼ _____¼ Sec _____ T _____ R _____ _____ County
UTM Coordinates Easting (X):_____ Northing (Y):_____
004 _____¼ _____¼ Sec _____ T _____ R _____ _____ County
UTM Coordinates Easting (X):_____ Northing (Y): _____

7.2 Primary Standard Industrial Classification (SIC) and Facility North American Industrial Classification System (NAICS) Codes.
001 – SIC 4911 and NAICS 221112 002 – SIC _____ and NAICS _____
003 – SIC _____ and NAICS _____ 004 – SIC _____ and NAICS _____

8. ADDITIONAL FORMS AND MAPS NECESSARY TO COMPLETE THIS APPLICATION (Complete all forms that are applicable.)

A. Is your facility a manufacturing, commercial, mining or silviculture waste treatment facility? YES ☑ NO ☐
If yes, complete Form C (unless storm water only, then complete U.S. Environmental Protection Agency Form 2F per Item C below).

B. Is your facility considered a "Primary Industry" under EPA guidelines: YES ■ NO ☐
If yes, complete Forms C and D.

C. Is application for storm water discharges only? YES ☐ NO ☑
If yes, complete EPA Form 2F.

D. Attach a map showing all outfalls and the receiving stream at 1" = 2,000' scale.

E. Is wastewater land applied? If yes, complete Form I. YES ☐ NO ☑

F. Is sludge, biosolids, ash or residuals generated, treated, stored or land applied? YES ☑ NO ☐
If yes, complete Form R. Form R not included. See Cover Letter.

9. DOWNSTREAM LANDOWNER(S) Attach additional sheets as necessary. See Instructions. (PLEASE SHOW LOCATION ON MAP. SEE 8.D ABOVE).

NAME			
Carolyn Brunjes			
ADDRESS	CITY	STATE	ZIP CODE
4473 Elder Rd	Villa Ridge	MO	63089

10. I certify that I am familiar with the information contained in the application, that to the best of my knowledge and belief such information is true, complete and accurate, and if granted this permit, I agree to abide by the Missouri Clean Water Law and all rules, regulations, orders and decisions, subject to any legitimate appeal available to applicant under the Missouri Clean Water Law to the Missouri Clean Water Commission.

NAME AND OFFICIAL TITLE (TYPE OR PRINT)	TELEPHONE WITH AREA CODE
David Strubberg, Manager, Labadie Energy Center	(314) 992-8501
SIGNATURE: David Strubberg	DATE SIGNED: 12/22/11

MO 780-1479 (01-09)

BEFORE MAILING, PLEASE ENSURE ALL SECTIONS ARE COMPLETED AND ADDITIONAL FORMS, IF APPLICABLE, ARE INCLUDED.

Submittal of an incomplete application may result in the application being returned.

HAVE YOU INCLUDED:

- ☐ Appropriate Fees?
- ☐ Map at 1" = 2000' scale?
- ☐ Signature?
- ☐ Form C, if applicable?
- ☐ Form D, if applicable?
- ☐ Form 2F, if applicable?
- ☐ Form I (Irrigation), if applicable?
- ☐ Form R (Sludge), if applicable?

RECEIVED
DEC 28 2011
WATER PROTECTION PROGRAM

MISSOURI DEPARTMENT OF NATURAL RESOURCES
WATER PROTECTION PROGRAM, WATER POLLUTION BRANCH
(SEE MAP FOR APPROPRIATE REGIONAL OFFICE)

FORM C – APPLICATION FOR DISCHARGE PERMIT – MANUFACTURING, COMMERCIAL, MINING AND SILVICULTURE OPERATIONS

FOR AGENCY USE ONLY	
CHECK NO.	
DATE RECEIVED	FEE SUBMITTED

NOTE: DO NOT ATTEMPT TO COMPLETE THIS FORM BEFORE READING THE ACCOMPANYING INSTRUCTIONS

1.00 NAME OF FACILITY

Ameren Missouri, Labadie Energy Center

1.10 THIS FACILITY IS NOW IN OPERATION UNDER MISSOURI OPERATING PERMIT NUMBER

MO-0004812

1.20 THIS IS A NEW FACILITY AND WAS CONSTRUCTED UNDER MISSOURI CONSTRUCTION PERMIT NUMBER (COMPLETE ONLY IF THIS FACILITY DOES NOT HAVE AN OPERATING PERMIT).

2.00 LIST THE STANDARD INDUSTRIAL CLASSIFICATION (SIC) CODES APPLICABLE TO YOUR FACILITY (FOUR DIGIT CODE)

A. FIRST 4911 B. SECOND

C. THIRD D. FOURTH

2.10 FOR EACH OUTFALL GIVE THE LEGAL DESCRIPTION.

OUTFALL NUMBER (LIST) ____ ¼ ____ ¼ SEC ____ T ____ R ____ ____ County

See Attachment A

2.20 FOR EACH OUTFALL LIST THE NAME OF THE RECEIVING WATER.

OUTFALL NUMBER (LIST)	RECEIVING WATER
001-007	Missouri River
008	Labadie Creek

2.30 BRIEFLY DESCRIBE THE NATURE OF YOUR BUSINESS:

Steam electric power plant

2.40

A. Attach a line drawing showing the water flow through the facility. Indicate sources of intake water, operations contributing wastewater to the effluent and treatment units labeled to correspond to the more detailed descriptions in Item B. Construct a water balance on the line drawing by showing average flows between intakes, operations, treatment units, public sewers and outfalls. If a water balance cannot be determined (e.g., for certain mining activities), provide a pictorial description of the nature and amount of any sources of water and any collection or treatment measures.

B. For each outfall, provide a description of 1. All operations contributing wastewater to the effluent, including process wastewater, sanitary wastewater, cooling water and storm water runoff. 2. The average flow contributed by each operation. 3. The treatment received by the wastewater. Continue on additional sheets if necessary.

All Flows in million gallons per day (MGD)

1. OUTFALL NO.	2. OPERATION(S) CONTRIBUTING FLOW		3. TREATMENT	
(LIST)	A. OPERATION (LIST)	B. AVERAGE FLOW (INCLUDE UNITS) (MAXIMUM FLOW)	A. DESCRIPTION	B. LIST CODES FROM TABLE A
001	Non-Contact Cooling Water - Condensers Units 1 & 2		Discharge	4A
	- Condensers Units 3 & 4 - Condensate Cooler			
	- Aux. Cooling Water Heat Exchangers - Condenser Vacuum Pump Coolers			
	- Jacket Water Coolers			
002	"Old" Ash Pond - Fly Ash Lines		Sedimentation Neutralization	1U 2K
	- Bottom Ash Lines - Combined Drain Sump		Discharge	4A
	- Coal Pile Runoff - Storm Water Runoff Plant Assoc Areas			
002A	Sewage Treatment Plant		Activated Sludge Sedimentation	3A 1U
003	Storm Water Runoff (SWR)		Discharge Discharge	4A 4A
004	SWR		Discharge	4A
005	SWR		Discharge	4A
006	SWR		Discharge	4A
007	SWR		Discharge	4A
008	SWR		Discharge	4A
Notes: See Attachment A for a description of Outfalls See Attachment B for a description of other discharges				
See Drawing 1 (8500-x-53281 for flow diagram and water balance)				

2.40 CONTINUED

C. EXCEPT FOR STORM RUNOFF, LEAKS, OR SPILLS, ARE ANY OF THE DISCHARGES DESCRIBED IN ITEMS A OR B INTERMITTENT OR SEASONAL?

☐ **YES** *(COMPLETE THE FOLLOWING TABLE)* ☒ **NO** *(GO TO SECTION 2.50)*

1. OUTFALL NUMBER *(list)*	2. OPERATION(S) CONTRIBUTING FLOW *(list)*	3. FREQUENCY		4. FLOW				
		A. DAYS PER WEEK *(specify average)*	B. MONTHS PER YEAR *(specify average)*	A. FLOW RATE *(in mgd)*		B. TOTAL VOLUME *(specify with units)*		C. DURATION *(in days)*
				1. LONG TERM AVERAGE	2. MAXIMUM DAILY	4. LONG TERM DAILY	3. MAXIMUM AVERAGE	

2.50 MAXIMUM PRODUCTION

A. DOES AN EFFLUENT GUIDELINE LIMITATION PROMULGATED BY EPA UNDER SECTION 304 OF THE CLEAN WATER ACT APPLY TO YOUR FACILITY?

☒ **YES** *(COMPLETE B.)* ☐ **NO** *(GO TO SECTION 2.60)*

B. ARE THE LIMITATIONS IN THE APPLICABLE EFFLUENT GUIDELINE EXPRESSED IN TERMS OF PRODUCTION *(OR OTHER MEASURE OF OPERATION)*?

☐ **YES** *(COMPLETE C.)* ☒ **NO** *(GO TO SECTION 2.60)*

C. IF YOU ANSWERED "YES" TO B. LIST THE QUANTITY THAT REPRESENTS AN ACTUAL MEASUREMENT OF YOUR MAXIMUM LEVEL OF PRODUCTION, EXPRESSED IN THE TERMS AND UNITS USED IN THE APPLICABLE EFFLUENT GUIDELINE AND INDICATE THE AFFECTED OUTFALLS.

1. MAXIMUM QUANTITY			2. AFFECTED OUTFALLS *(list outfall numbers)*
A. QUANTITY PER DAY	B. UNITS OF MEASURE	C. OPERATION, PRODUCT, MATERIAL, ETC. *(specify)*	

2.60 IMPROVEMENTS

A. ARE YOU NOW REQUIRED BY ANY FEDERAL, STATE OR LOCAL AUTHORITY TO MEET ANY IMPLEMENTATION SCHEDULE FOR THE CONSTRUCTION, UPGRADING OR OPERATION OF WASTEWATER TREATMENT EQUIPMENT OR PRACTICES OR ANY OTHER ENVIRONMENTAL PROGRAMS THAT MAY AFFECT THE DISCHARGES DESCRIBED IN THIS APPLICATION? THIS INCLUDES, BUT IS NOT LIMITED TO, PERMIT CONDITIONS, ADMINISTRATIVE OR ENFORCEMENT ORDERS, ENFORCEMENT COMPLIANCE SCHEDULE LETTERS, STIPULATIONS, COURT ORDERS AND GRANT OR LOAN CONDITIONS.

☐ **YES** *(COMPLETE THE FOLLOWING TABLE)* ☒ **NO** *(GO TO 3.00)*

1. IDENTIFICATION OF CONDITION, AGREEMENT, ETC.	2. AFFECTED OUTFALLS		3. BRIEF DESCRIPTION OF PROJECT	4. FINAL COMPLIANCE DATE	
				A. REQUIRED	B. PROJECTED

B. OPTIONAL: YOU MAY ATTACH ADDITIONAL SHEETS DESCRIBING ANY ADDITIONAL WATER POLLUTION CONTROL PROGRAMS *(OR OTHER ENVIRONMENTAL PROJECTS WHICH MAY EFFECT YOUR DISCHARGES)* YOU NOW HAVE UNDER WAY OR WHICH YOU PLAN. INDICATE WHETHER EACH PROGRAM IS NOW UNDER WAY OR PLANNED, AND INDICATE YOUR ACTUAL OR PLANNED SCHEDULES FOR CONSTRUCTION.

☒ **MARK "X" IF DESCRIPTION OF ADDITIONAL CONTROL PROGRAMS IS ATTACHED.**

3.00 INTAKE AND EFFLUENT CHARACTERISTICS

A. & B. SEE INSTRUCTIONS BEFORE PROCEEDING – COMPLETE ONE TABLE FOR EACH OUTFALL – ANNOTATE THE OUTFALL NUMBER IN THE SPACE PROVIDED.
NOTE: TABLE 1 IS INCLUDED ON SEPARATE SHEETS NUMBERED FROM PAGE 6 TO PAGE 7.

C. USE THE SPACE BELOW TO LIST ANY OF THE POLLUTANTS LISTED IN PART B OF THE INSTRUCTIONS, WHICH YOU KNOW OR HAVE REASON TO BELIEVE IS DISCHARGED OR MAY BE DISCHARGED FROM ANY OUTFALL. FOR EVERY POLLUTANT YOU LIST, BRIEFLY DESCRIBE THE REASONS YOU BELIEVE IT TO BE PRESENT AND REPORT ANY ANALYTICAL DATA IN YOUR POSSESSION.

1. POLLUTANT	2. SOURCE	1. POLLUTANT	2. SOURCE
Various metals including strontium, uranium, and vanadium may be present in coal ash in trace amounts.			
Asbestos is present in insulating material in the plant. Therefore, incidental quantities may unavoidably reach the ash pond. However, all asbestos removal and disposal activities are conducted in accordance with 40CFR Part 61, Subpart M, National Emission Standard for Hazardous Air Pollutants and OSHA Standard 29CFR Parts 1910.1001 and 1926.1101. The plant's intake water, the Missouri River, may also contain pollutants listed in Table B.			
With respect to chemicals used in the laboratory, see Attachment D, Chemical Usage. (Note: The discharge point for the above elements and compounds would be Outfall 002, the Ash Pond. Any pollutants in the intake water would also be present in Outfall 001, Non-contact Cooling Water.)			

3.10 BIOLOGICAL TOXICITY TESTING DATA

DO YOU HAVE ANY KNOWLEDGE OR REASON TO BELIEVE THAT ANY BIOLOGICAL TEST FOR ACUTE OR CHRONIC TOXICITY HAS BEEN MADE ON ANY OF YOUR DISCHARGES OR ON A RECEIVING WATER IN RELATION TO YOUR DISCHARGE WITHIN THE LAST THREE YEARS?

☒ **YES** *(IDENTIFY THE TEST(S) AND DESCRIBE THEIR PURPOSES BELOW.)* ☐ **NO** *(GO TO 3.20)*

The existing permit requires Whole Effluent Toxicity (WET) tests for two outfalls. Annual tests on Outfall 001 (Non-Contact Cooling Water) are required when biocides are used. However, biocides have not been used to date as fouling organisms have not been detected in the circulating water system. Annual tests are also required for Outfall 002 (the Ash Pond). The effluent has passed the toxicity test criteria every year.

3.20 CONTRACT ANALYSIS INFORMATION

WERE ANY OF THE ANALYSES REPORTED PERFORMED BY A CONTRACT LABORATORY OR CONSULTING FIRM?

☒ **YES** *(LIST THE NAME, ADDRESS AND TELEPHONE NUMBER OF AND POLLUTANTS ANALYZED BY EACH SUCH LABORATORY OR FIRM BELOW.)* ☐ **NO** *(GO TO 3.30)*

A. NAME	B. ADDRESS	C. TELEPHONE *(area code and number)*	D. POLLUTANTS ANALYZED *(list)*
PDC Laboratories, Inc.	3278 N Hwy 67 Florissant, MO 63033	314-432-0550	Sulfides, Nitrate, Volatiles, Semi-volatiles
Pace Analytical Services	9608 Loiret Blvd Lenexa, KS 66219	913-599-5665	Gross Alpha, Gross Beta

3.30 CERTIFICATION

I CERTIFY UNDER PENALTY OF LAW THAT I HAVE PERSONALLY EXAMINED AND AM FAMILIAR WITH THE INFORMATION SUBMITTED IN THIS APPLICATION AND ALL ATTACHMENTS AND THAT, BASED ON MY INQUIRY OF THOSE INDIVIDUALS IMMEDIATELY RESPONSIBLE FOR OBTAINING THE INFORMATION, I BELIEVE THAT THE INFORMATION IS TRUE, ACCURATE AND COMPLETE. I AM AWARE THAT THERE ARE SIGNIFICANT PENALTIES FOR SUBMITTING FALSE INFORMATION, INCLUDING THE POSSIBILITY OF FINE AND IMPRISONMENT.

NAME AND OFFICIAL TITLE (TYPE OR PRINT)	TELEPHONE NUMBER (AREA CODE AND NUMBER
David Strubberg, Manager, Labadie Energy Center	314-992-8201
SIGNATURE (SEE INSTRUCTIONS) David Strubberg	DATE SIGNED 12/22/11

PLEASE PRINT OR TYPE. You may report some or all of this information on separate sheets *(use the same format)* instead of completing these pages.
SEE INSTRUCTIONS.

FORM C
TABLE 1 FOR 3.00 ITEM A AND B

INTAKE AND EFFLUENT CHARACTERISTICS *(continued from page 3 of Form 2-C)*

OUTFALL NO. 001

PART A – You must provide the results of at least one analysis for every pollutant in this table. Complete one table for each outfall. See instructions for additional details.

1. POLLUTANT	2. EFFLUENT							3. UNITS *(specify if blank)*		4. INTAKE *(optional)*		
	A. MAXIMUM DAILY VALUE		B. MAXIMUM 30 DAY VALUE *(if available)*		C. LONG TERM AVRG. VALUE *(if available)*		D. NO. OF ANAL-YSES	A. CONCEN-TRATION	B. MASS	A. LONG TERM AVRG. VALUE		B. NO. OF ANAL-YSES
	(1) CONCENTRATION	(2) MASS	(1) CONCENTRATION	(2) MASS	(1) CONCENTRATION	(2) MASS				(1) CONCENTRATION	(2) MASS	
A. Biochemical Oxygen Demand *(BOD)*	1	10,000					1	mg/l	lbs/day			
B. Chemical Oxygen Demand *(COD)*	25.7	250,000					1	mg/l	lbs/day			
C. Total Organic Carbon *(TOC)*	3.8	37,000					1	mg/l	lbs/day			
D. Total Suspended Solids *(TSS)*	43	410,000					1	mg/l	lbs/day			
E. Ammonia *(as N)*	0.08	770					1	mg/l	lbs/day			
F. Flow	VALUE 1154		VALUE 1330		VALUE 1232		1,12,365	MGD	---	VALUE		
G. Temperature *(winter)*	VALUE 25.6		VALUE 22		VALUE 20		1,3,90	°C		VALUE		
H. Temperature *(summer)*	VALUE		VALUE 41		VALUE 39		1,3,90	°C		VALUE		
I. pH	MINIMUM 8.23	MAXIMUM 8.31	MINIMUM	MAXIMUM			4	STANDARD UNITS				

PART B – Mark "X" in column 2-a for each pollutant you know or have reason to believe is present. Mark "X" in column 2-b for each pollutant you believe to be absent. If you mark column 2-a for any pollutant, you must provide the results of at least one analysis for that pollutant. Complete one table for each outfall. See the instructions for additional details and requirements.

1. POLLUTANT AND CAS NUMBER *(if available)*	2. MARK "X"		3. EFFLUENT							4. UNITS		5. INTAKE *(optional)*		
	A. BE-LIEVED PRE-SENT	B. BE-LIEVED AB-SENT	A. MAXIMUM DAILY VALUE		B. MAXIMUM 30 DAY VALUE *(if available)*		C. LONG TERM AVRG. VALUE *(if available)*		D. NO. OF ANAL-YSES	A. CONCEN-TRATION	B. MASS	A. LONG TERM AVRG. VALUE		B. NO. OF ANAL-YSES
			(1) CONCENTRATION	(2) MASS	(1) CONCENTRATION	(2) MASS	(1) CONCENTRATION	(2) MASS				(1) CONCENTRATION	(2) MASS	
A. Bromide (24959-67-9)		X												
B. Chlorine Total Residual		X												
C. Color		X												
D. Fecal Coliform	X											X		
E. Fluoride (16984-48-8)	X											X		
F. Nitrate–Nitrite *(as N)*	X											X		

PLEASE PRINT OR TYPE. You may report some or all of this information on separate sheets *(use the same format)* instead of completing these pages.
SEE INSTRUCTIONS.

FORM C
TABLE 1 FOR 3.00 ITEM A AND B

INTAKE AND EFFLUENT CHARACTERISTICS *(continued from page 3 of Form 2-C)*

OUTFALL NO. 002

PART A – You must provide the results of at least one analysis for every pollutant in this table. Complete one table for each outfall. See instructions for additional details.

1. POLLUTANT	2. EFFLUENT							3. UNITS *(specify if blank)*		4. INTAKE *(optional)*		
	A. MAXIMUM DAILY VALUE		B. MAXIMUM 30 DAY VALUE *(if available)*		C. LONG TERM AVRG. VALUE *(if available)*		D. NO. OF ANAL-YSES	A. CONCEN-TRATION	B. MASS	A. LONG TERM AVRG. VALUE		B. NO. OF ANAL-YSES
	(1) CONCENTRATION	(2) MASS	(1) CONCENTRATION	(2) MASS	(1) CONCENTRATION	(2) MASS				(1) CONCENTRATION	(2) MASS	
A. Biochemical Oxygen Demand *(BOD)*	3	900					1	mg/l	lbs/day	1		1
B. Chemical Oxygen Demand *(COD)*	27.8	8390					1	mg/l	lbs/day	25.7		1
C. Total Organic Carbon *(TOC)*	3.8	1100					1	mg/l	lbs/day	3.7		1
D. Total Suspended Solids *(TSS)*	16	4800	82.8	18600	41.2	5390	1,12,52	mg/l	lbs/day	413		53
E. Ammonia *(as N)*	0.01						1	mg/l	lbs/day	0.09		1
F. Flow	VALUE 36.2		VALUE 26.9		VALUE 15.7		1,12,52	MGD		VALUE 36.2		1
G. Temperature *(winter)*	VALUE 20.6		VALUE		VALUE		4	°C		VALUE 19		4
H. Temperature *(summer)*	VALUE		VALUE		VALUE			°C		VALUE		
I. pH	MINIMUM 7.21	MAXIMUM 8.91	MINIMUM 7.2	MAXIMUM 8.8				STANDARD UNITS				

PART B – Mark "X" in column 2-a for each pollutant you know or have reason to believe is present. Mark "X" in column 2-b for each pollutant you believe to be absent. If you mark column 2-a for any pollutant, you must provide the results of at least one analysis for that pollutant. Complete one table for each outfall. See the instructions for additional details and requirements.

1. POLLUTANT AND CAS NUMBER *(if available)*	2. MARK "X"		3. EFFLUENT							4. UNITS		5. INTAKE *(optional)*		
	A. BE-LIEVED PRE-SENT	B. BE-LIEVED AB-SENT	A. MAXIMUM DAILY VALUE		B. MAXIMUM 30 DAY VALUE *(if available)*		C. LONG TERM AVRG. VALUE *(if available)*		D. NO. OF ANAL-YSES	A. CONCEN-TRATION	B. MASS	A. LONG TERM AVRG. VALUE		B. NO. OF ANAL-YSES
			(1) CONCENTRATION	(2) MASS	(1) CONCENTRATION	(2) MASS	(1) CONCENTRATION	(2) MASS				(1) CONCENTRATION	(2) MASS	
A. Bromide (24959-67-9)	X		<0.5	<150					1	mg/l	lbs/day	<0.5	<150	1
B. Chlorine Total Residual		X												
C. Color		X												
D. Fecal Coliform	X		233	---					4	CFU/100ml		52	---	4
E. Fluoride (16984-48-8)	X		0.58	180					1	mg/l	lbs/day	0.68	200	1
F. Nitrate–Nitrite *(as N)*	X		0.62	190					1	mg/l	lbs/day	1.4	420	1

CONTINUED FROM FRONT

Outfall 001

1. POLLUTANT AND CAS NUMBER (if available)	2. MARK "X"		3. EFFLUENT							4. UNITS		5. INTAKE (optional)		
	A. BELIEVED PRESENT	B. BELIEVED ABSENT	A. MAXIMUM DAILY VALUE		B. MAXIMUM 30 DAY VALUE (if available)		C. LONG TERM AVRG. VALUE (if available)		D. NO. OF ANALYSES	A. CONCENTRATION	B. MASS	A. LONG TERM AVRG. VALUE		B. NO. OF ANALYSES
			(1) CONCENTRATION	(2) MASS	(1) CONCENTRATION	(2) MASS	(1) CONCENTRATION	(2) MASS				(1) CONCENTRATION	(2) MASS	
G. Nitrogen Total Organic *(as N)*	X		0.55	5300						mg/l	lbs/day	X		
H. Oil and Grease	X		1.8	17000						mg/l	lbs/day			
I. Phosphorus *(as P)* Total (7723-14-0)	X											X		
J. RADIOACTIVITY														
(1) Alpha Total	X											X		
(2) Beta Total	X											X		
(3) Radium Total		X												
(4) Radium 226 Total		X												
K. Sulfate *(as SO^4)* (14808-79-8)	X		66	640000						mg/l	lbs/day	X		
L. Sulfide *(as S)*		X												
M. Sulfite *(as SO^3)* (14265-45-3)		X												
N. Surfactants		X												
O. Aluminum Total (7429-90-5)	X											X		
P. Barium Total (7440-39-3)	X											X		
Q. Boron Total (7440-42-8)	X											X		
R. Cobalt Total (7440-48-4)		X												
S. Iron total (7439-89-6)	X											X		
T. Magnesium Total (7439-95-4)	X											X		
U. Molybdenum Total (7439-98-7)	X											X		
V. Manganese Total (7439-96-5)	X											X		
W. Tin Total (7440-31-5)		X												
X. Titanium Total (7440-32-6)	X											X		

CONTINUED FROM FRONT

Outfall 002

1. POLLUTANT AND CAS NUMBER (if available)	2. MARK "X"		3. EFFLUENT							4. UNITS		5. INTAKE (optional)		
	A. BELIEVED PRESENT	B. BELIEVED ABSENT	A. MAXIMUM DAILY VALUE		B. MAXIMUM 30 DAY VALUE (if available)		C. LONG TERM AVRG. VALUE (if available)		D. NO. OF ANALYSES	A. CONCENTRATION	B. MASS	A. LONG TERM AVRG. VALUE		B. NO. OF ANALYSES
			(1) CONCENTRATION	(2) MASS	(1) CONCENTRATION	(2) MASS	(1) CONCENTRATION	(2) MASS				(1) CONCENTRATION	(2) MASS	
G. Nitrogen Total Organic *(as N)*	X		0.61	180					1	mg/l	lbs/day	0.62	190	1
H. Oil and Grease	X		0.3	90					4	mg/l	lbs/day	1.5	450	4
I. Phosphorus *(as P)* Total (7723-14-0)	X		1.14	344					1	mg/l	lbs/day	0.57	170	1
J. RADIOACTIVITY														
(1) Alpha Total	X		1.68+/-1.4	---					1	pCi/l		4.65+/-2.13	---	1
(2) Beta Total	X		6.93+/-1.79	---					1	pCi/l		5.70+/-1.8	---	1
(3) Radium Total		X												
(4) Radium 226 Total		X												
K. Sulfate *(as SO^4)* (14808-79-8)	X		57	17000					1	mg/l	lbs/day	66	20000	1
L. Sulfide *(as S)*		X												
M. Sulfite *(as SO^3)* (14265-45-3)	X		2.0	600					4	mg/l	lbs/day	1.5	450	4
N. Surfactants	X		0.14	42					1	mg/l	lbs/day	<0.1	<30	1
O. Aluminum Total (7429-90-5)	X		0.855	258					1	mg/l	lbs/day	2.57	776	1
P. Barium Total (7440-39-3)	X		0.212	64					1	mg/l	lbs/day	0.122	36.8	1
Q. Boron Total (7440-42-8)	X		1.15	347					1	mg/l	lbs/day	0.206	62.2	1
R. Cobalt Total (7440-48-4)		X												
S. Iron total (7439-89-6)	X		0.536	162					1	mg/l	lbs/day	2.31	697	1
T. Magnesium Total (7439-95-4)	X		18.3	5520					1	mg/l	lbs/day	20.2	6100	1
U. Molybdenum Total (7439-98-7)	X		0.052	16					1	mg/l	lbs/day	0.006	2	1
V. Manganese Total (7439-96-5)	X		0.057	17					1	mg/l	lbs/day	0.2	60	1
W. Tin Total (7440-31-5)		X												
X. Titanium Total (7440-32-6)	X		0.033	10					1	mg/l	lbs/day	0.107	32.3	1

PLEASE PRINT OR TYPE. You may report some or all of this information on separate sheets *(use the same format)* instead of completing these pages.
SEE INSTRUCTIONS.

FORM C
TABLE 1 FOR 3.00 ITEM A AND B

INTAKE AND EFFLUENT CHARACTERISTICS *(continued from page 3 of Form 2-C)*

OUTFALL NO. 002A

PART A – You must provide the results of at least one analysis for every pollutant in this table. Complete one table for each outfall. See instructions for additional details.

1. POLLUTANT	2. EFFLUENT							3. UNITS *(specify if blank)*		4. INTAKE *(optional)*		
	A. MAXIMUM DAILY VALUE		B. MAXIMUM 30 DAY VALUE *(if available)*		C. LONG TERM AVRG. VALUE *(if available)*		D. NO. OF ANAL-YSES	A. CONCEN-TRATION	B. MASS	A. LONG TERM AVRG. VALUE		B. NO. OF ANAL-YSES
	(1) CONCENTRATION	(2) MASS	(1) CONCENTRATION	(2) MASS	(1) CONCENTRATION	(2) MASS				(1) CONCENTRATION	(2) MASS	
A. Biochemical Oxygen Demand *(BOD)*	2	0.1	9.0	6.0	4.8	0.8	1,12,52	mg/l	lbs/day			
B. Chemical Oxygen Demand *(COD)*	25.7	1.71					1	mg/l	lbs/day			
C. Total Organic Carbon *(TOC)*	2.4	0.16					1	mg/l	lbs/day			
D. Total Suspended Solids *(TSS)*	5	0.33	18.5	12.34	5.8	0.97	1,12,52	mg/l	lbs/day			
E. Ammonia *(as N)*	0.2	0.01					1	mg/l	lbs/day			
F. Flow	VALUE 0.008		VALUE 0.08		VALUE 0.02		1,12,12			VALUE		
G. Temperature *(winter)*	VALUE 22.8		VALUE		VALUE		4	°C		VALUE		
H. Temperature *(summer)*	VALUE		VALUE		VALUE			°C		VALUE		
I. pH	MINIMUM 7.85	MAXIMUM 7.97	MINIMUM 7.2	MAXIMUM 7.5			4,4	STANDARD UNITS				

PART B – Mark "X" in column 2-a for each pollutant you know or have reason to believe is present. Mark "X" in column 2-b for each pollutant you believe to be absent. If you mark column 2-a for any pollutant, you must provide the results of at least one analysis for that pollutant. Complete one table for each outfall. See the instructions for additional details and requirements.

1. POLLUTANT AND CAS NUMBER *(if available)*	2. MARK "X"		3. EFFLUENT							4. UNITS		5. INTAKE *(optional)*		
	A. BE-LIEVED PRE-SENT	B. BE-LIEVED AB-SENT	A. MAXIMUM DAILY VALUE		B. MAXIMUM 30 DAY VALUE *(if available)*		C. LONG TERM AVRG. VALUE *(if available)*		D. NO. OF ANAL-YSES	A. CONCEN-TRATION	B. MASS	A. LONG TERM AVRG. VALUE		B. NO. OF ANAL-YSES
			(1) CONCENTRATION	(2) MASS	(1) CONCENTRATION	(2) MASS	(1) CONCENTRATION	(2) MASS				(1) CONCENTRATION	(2) MASS	
A. Bromide (24959-67-9)		X												
B. Chlorine Total Residual		X												
C. Color		X												
D. Fecal Coliform	X		21000	---					4	CFU/100ml				
E. Fluoride (16984-48-8)	X		0.37	0.025					1	mg/l	lbs/day			
F. Nitrate–Nitrite *(as N)*	X		19	1.26					1	mg/l	lbs/day			

CONTINUED FROM FRONT

Outfall 002A

1. POLLUTANT AND CAS NUMBER (if available)	2. MARK "X"		3. EFFLUENT							4. UNITS		5. INTAKE (optional)		
	A. BELIEVED PRESENT	B. BELIEVED ABSENT	A. MAXIMUM DAILY VALUE		B. MAXIMUM 30 DAY VALUE (if available)		C. LONG TERM AVRG. VALUE (if available)		D. NO. OF ANALYSES	A. CONCENTRATION	B. MASS	A. LONG TERM AVRG. VALUE		B. NO. OF ANALYSES
			(1) CONCENTRATION	(2) MASS	(1) CONCENTRATION	(2) MASS	(1) CONCENTRATION	(2) MASS				(1) CONCENTRATION	(2) MASS	
G. Nitrogen Total Organic *(as N)*	X		0.27	0.018					1	mg/l	lbs/day			
H. Oil and Grease	X		3.9	0.26					4	mg/l	lbs/day			
I. Phosphorus *(as P)* Total (7723-14-0)	X		8.8	0.59					1	mg/l	lbs/day			
J. RADIOACTIVITY														
(1) Alpha Total		X												
(2) Beta Total		X												
(3) Radium Total		X												
(4) Radium 226 Total		X												
K. Sulfate *(as SO^4)* (14808-79-8)	X		12	0.8					1	mg/l	lbs/day			
L. Sulfide *(as S)*		X												
M. Sulfite *(as SO^3)* (14265-45-3)		X												
N. Surfactants	X		0.4	0.027					1	mg/l	lbs/day			
O. Aluminum Total (7429-90-5)		X												
P. Barium Total (7440-39-3)		X												
Q. Boron Total (7440-42-8)		X												
R. Cobalt Total (7440-48-4)		X												
S. Iron total (7439-89-6)	X		0.122	0.0081					1	mg/l	lbs/day			
T. Magnesium Total (7439-95-4)		X												
U. Molybdenum Total (7439-98-7)		X												
V. Manganese Total (7439-96-5)		X												
W. Tin Total (7440-31-5)		X												
X. Titanium Total (7440-32-6)		X												

Please print or type in the unshaded areas only.

EPA ID Number (*copy from Item 1 of Form 1*)
MO-0004812

Form Approved. OMB No. 2040-0086
Approval expires 5-31-92

FORM 2F NPDES

U.S. Environmental Protection Agency
Washington, DC 20460

Application for Permit to Discharge Storm Water Discharges Associated with Industrial Activity

Paperwork Reduction Act Notice

Public reporting burden for this application is estimated to average 28.6 hours per application, including time for reviewing instructions, searching existing data sources, gathering and maintaining the data needed, and completing and reviewing the collection of information. Send comments regarding the burden estimate, any other aspect of this collection of information, or suggestions for improving this form, including suggestions which may increase or reduce this burden to: Chief, Information Policy Branch, PM-223, U.S. Environmental Protection Agency, 1200 Pennsylvania Avenue, NW, Washington, DC 20460, or Director, Office of Information and Regulatory Affairs, Office of Management and Budget, Washington, DC 20503.

I. Outfall Location

For each outfall, list the latitude and longitude of its location to the nearest 15 seconds and the name of the receiving water.

A. Outfall Number (*list*)	B. Latitude			C. Longitude			D. Receiving Water (*name*)
003	38.00	33.00	53.70	90.00	50.00	12.90	Missouri River
004	38.00	33.00	50.60	90.00	50.00	18.10	Missouri River via ash pond discharge canal
005	38.00	33.00	48.40	90.00	50.00	21.80	Missouri River via ash pond discharge canal
006	38.00	33.00	43.10	90.00	50.00	29.70	Missouri River via ash pond discharge canal
007	38.00	33.00	32.20	90.00	50.00	30.60	Missouri River only under high water conditions
008	38.00	32.00	34.10	90.00	50.00	36.30	Labadie Creek

II. Improvements

A. Are you now required by any Federal, State, or local authority to meet any implementation schedule for the construction, upgrading or operation of wastewater treatment equipment or practices or any other environmental programs which may affect the discharges described in this application? This includes, but is not limited to, permit conditions, administrative or enforcement orders, enforcement compliance schedule letters, stipulations, court orders, and grant or loan conditions.

1. Identification of Conditions, Agreements, Etc.	2. Affected Outfalls		3. Brief Description of Project	4. Final Compliance Date	
	number	source of discharge		a. req.	b. proj.
None					

B: You may attach additional sheets describing any additional water pollution (or other environmental projects which may affect your discharges) you now have under way or which you plan. Indicate whether each program is now under way or planned, and indicate your actual or planned schedules for construction.

III. Site Drainage Map

Attach a site map showing topography (or indicating the outline of drainage areas served by the outfalls(s) covered in the application if a topographic map is unavailable) depicting the facility including: each of its intake and discharge structures; the drainage area of each storm water outfall; paved areas and buildings within the drainage area of each storm water outfall, each known past or present areas used for outdoor storage of disposal of significant materials, each existing structural control measure to reduce pollutants in storm water runoff, materials loading and access areas, areas where pesticides, herbicides, soil conditioners and fertilizers are applied; each of its hazardous waste treatment, storage or disposal units (including each area not required to have a RCRA permit which is used for accumulating hazardous waste under 40 CFR 262.34); each well where fluids from the facility are injected underground; springs, and other surface water bodies which received storm water discharges from the facility.

See Attached

 Continue on Page 2

Continued from the Front

IV. Narrative Description of Pollutant Sources

A. For each outfall, provide an estimate of the area (include units) of imperious surfaces (including paved areas and building roofs) drained to the outfall, and an estimate of the total surface area drained by the outfall.

Outfall Number	Area of Impervious Surface *(provide units)*	Total Area Drained *(provide units)*	Outfall Number	Area of Impervious Surface *(provide units)*	Total Area Drained *(provide units)*
003	3.8	5	008	0.5	1
004	1.4	1.4			
005	0.05	0.1			
006	1.8	3.7			
007	1.7	3.3			

B. Provide a narrative description of significant materials that are currently or in the past three years have been treated, stored or disposed in a manner to allow exposure to storm water; method of treatment, storage, or disposal; past and present materials management practices employed to minimize contact by these materials with storm water runoff; materials loading and access areas, and the location, manner, and frequency in which pesticides, herbicides, soil conditioners, and fertilizers are applied.

See Attachment I

C. For each outfall, provide the location and a description of existing structural and nonstructural control measures to reduce pollutants in storm water runoff; and a description of the treatment the storm water receives, including the schedule and type of maintenance for control and treatment measures and the ultimate disposal of any solid or fluid wastes other than by discharge.

Outfall Number	Treatment	List Codes from Table 2F-1
	See Attachment A	4-A

V. Nonstormwater Discharges

A. I certify under penalty of law hat the outfall(s) covered by this application have been tested or evaluated for the presence of nonstormwater discharges, and that all nonstormwater discharged from these outfall(s) are identified in either an accompanying Form 2C or From 2E application for the outfall.

Name and Official Title *(type or print)*	Signature	Date Signed
David Strubberg Manager, Labadie Plant	David Strubberg	12/22/11

B. Provide a description of the method used, the date of any testing, and the onsite drainage points that were directly observed during a test.

See Attachment K

VI. Significant Leaks or Spills

Provide existing information regarding the history of significant leaks or spills of toxic or hazardous pollutants at the facility in the last three years, including the approximate date and location of the spill or leak, and the type and amount of material released.

See Attachment L

 Continue on Page 3

Continued from Page 2

EPA ID Number *(copy from Item 1 of Form 1)*
MO-0004812

VII. Discharge Information

A, B, C, & D: See instructions before proceeding. Complete one set of tables for each outfall. Annotate the outfall number in the space provided. Table VII-A, VII-B, VII-C are included on separate sheets numbers VII-1 and VII-2.

E. Potential discharges not covered by analysis – is any toxic pollutant listed in table 2F-2, 2F-3, or 2F-4, a substance or a component of a substance which you currently use or manufacture as an intermediate or final product or byproduct?

☑ Yes (*list all such pollutants below*) ☐ No (*go to Section IX*)

Chlorine, total residual
Surfactants
Various other trace metals may be present in coal or coal ash. Other chemicals listed in Form 2F-3 and 2F-4 that may be present are listed in Attachment D, Chemical Usage.

VIII. Biological Toxicity Testing Data

Do you have any knowledge or reason to believe that any biological test for acute or chronic toxicity has been made on any of your discharges or on a receiving water in relation to your discharge within the last 3 years?

☐ Yes (*list all such pollutants below*) ☑ No (*go to Section IX*)

IX. Contract Analysis Information

Were any of the analyses reported in Item VII performed by a contract laboratory or consulting firm?

☐ Yes (*list the name, address, and telephone number of, and pollutants analyzed by, each such laboratory or firm below*) ☑ No (*go to Section X*)

A. Name	B. Address	C. Area Code & Phone No.	D. Pollutants Analyzed

X. Certification

I certify under penalty of law that this document and all attachments were prepared under my direction or supervision in accordance with a system designed to assure that qualified personnel properly gather and evaluate the information submitted. Based on my inquiry of the person or persons who manage the system or those persons directly responsible for gathering the information, the information submitted is, to the best of my knowledge and belief, true, accurate, and complete. I am aware that there are significant penalties for submitting false information, including the possibility of fine and imprisonment for knowing violations.

A. Name & Official Title (*Type Or Print*)	B. Area Code and Phone No.
David Strubberg, Manager, Labadie Plant	(314) 992-8201
C. Signature: David Strubberg	D. Date Signed: 12/22/11

OUTFALL 003

EPA ID Number (*copy from Item 1 of Form 1*)
MO-0004812

Form Approved. OMB No. 2040-0086
Approval expires 5-31-92

VII. Discharge information *(Continued from page 3 of Form 2F)*

Part A – You must provide the results of at least one analysis for every pollutant in this table. Complete one table for each outfall. See instructions for additional details.

Pollutant and CAS Number *(if available)*	Maximum Values *(include units)*		Average Values *(include units)*		Number of Storm Events Sampled	Sources of Pollutants
	Grab Sample Taken During First 20 Minutes	Flow-Weighted Composite	Grab Sample Taken During First 20 Minutes	Flow-Weighted Composite		
Oil and Grease	0.5 mg/l	N/A	0.2		1,3	Plant roads, cars, equipment
Biological Oxygen Demand (BOD5)	3 mg/l	3 mg/l			1.00	Natural sources
Chemical Oxygen Demand (COD)	30 mg/l	25.7 mg/l			1.00	Coal dust, natural sources
Total Suspended Solids (TSS)	10 mg/l	10 mg/l			1.00	coal dust, gravel dust, soil
Total Nitrogen	0.35 mg/l	0.35 mg/l			1.00	natural sources
Total Phosphorus	1.24 mg/l	0.95 mg/l			1.00	natural sources
pH	Minimum 7.25	Maximum 8.11	Minimum 7.00	Maximum 8.60	1,3	natural sources

Part B – List each pollutant that is limited in an effluent guideline which the facility is subject to or any pollutant listed in the facility's NPDES permit for its process wastewater (if the facility is operating under an existing NPDES permit). Complete one table for each outfall. See the instructions for additional details and requirements.

Pollutant and CAS Number *(if available)*	Maximum Values *(include units)*		Average Values *(include units)*		Number of Storm Events Sampled	Sources of Pollutants
	Grab Sample Taken During First 20 Minutes	Flow-Weighted Composite	Grab Sample Taken During First 20 Minutes	Flow-Weighted Composite		
PCBs	<1 ug/l	NA			1.00	possible old transformer oil
Sulfate	3 mg/l	6 mg/l			1.00	natural sources
Set'ble Solids	<0.1 ml/l/hr	<0.1 ml/l/hr	<0.1ml/l/hr		1,3	coal dust,gravel dust,soil
Zinc	0.03 mg/l	0.05 mg/l			1.00	Roofing mat'l,mat'l storage

Continue on Reverse

Continued from the Front

Part C - List each pollutant shown in Table 2F-2, 2F-3, and 2F-4 that you know or have reason to believe is present. See the instructions for additional details and requirements. Complete one table for each outfall.

Pollutant and CAS Number *(if available)*	Maximum Values *(include units)*		Average Values *(include units)*		Number of Storm Events Sampled	Sources of Pollutants
	Grab Sample Taken During First 20 Minutes	Flow-Weighted Composite	Grab Sample Taken During First 20 Minutes	Flow-Weighted Composite		

Part D – Provide data for the storm event(s) which resulted in the maximum values for the flow weighted composite sample.

1. Date of Storm Event	2. Duration of Storm Event *(in minutes)*	3. Total rainfall during storm event *(in inches)*	4. Number of hours between beginning of storm measured and end of previous measurable rain event	5. Maximum flow rate during rain event *(gallons/minute or specify units)*	6. Total flow from rain event *(gallons or specify units)*
11/03/2011	Not Measured	0.65	7 days		0.053 mgd

7. Provide a description of the method of flow measurement or estimate.

An ISCO sampler was used to measure depth, which was converted to flow using the Manning Equation. The maximun flow rate is the maximum rate during the three hour sampling event.

OUTFALL 004

EPA ID Number (*copy from Item 1 of Form 1*)
MO-0004812

Form Approved. OMB No. 2040-0086
Approval expires 5-31-92

VII. Discharge information *(Continued from page 3 of Form 2F)*

Part A – You must provide the results of at least one analysis for every pollutant in this table. Complete one table for each outfall. See instructions for additional details.

Pollutant and CAS Number *(if available)*	Maximum Values *(include units)*		Average Values *(include units)*		Number of Storm Events Sampled	Sources of Pollutants
	Grab Sample Taken During First 20 Minutes	Flow-Weighted Composite	Grab Sample Taken During First 20 Minutes	Flow-Weighted Composite		
Oil and Grease	<0.1 mg/l	N/A	0.7 mg/l		1,3	Plant roads, cars, equipment
Biological Oxygen Demand (BOD5)	3 mg/l	3 mg/l			1.00	Natural sources
Chemical Oxygen Demand (COD)	36.4 mg/l	49.2 mg/l			1.00	Coal dust, natural sources
Total Suspended Solids (TSS)	18 mg/l	18 mg/l			1.00	coal dust, gravel dust, soil
Total Nitrogen	0.63 mg/l	0.76 mg/l			1.00	natural sources
Total Phosphorus	1.32 mg/l	0.29 mg/l			1.00	natural sources
pH	Minimum 7.37	Maximum 7.51	Minimum 6.60	Maximum 7.20	1,3	natural sources

Part B – List each pollutant that is limited in an effluent guideline which the facility is subject to or any pollutant listed in the facility's NPDES permit for its process wastewater (if the facility is operating under an existing NPDES permit). Complete one table for each outfall. See the instructions for additional details and requirements.

Pollutant and CAS Number *(if available)*	Maximum Values *(include units)*		Average Values *(include units)*		Number of Storm Events Sampled	Sources of Pollutants
	Grab Sample Taken During First 20 Minutes	Flow-Weighted Composite	Grab Sample Taken During First 20 Minutes	Flow-Weighted Composite		
PCBs	<1 ug/l	NA			1.00	possible old transformer oil
Sulfate	8 mg/l	8 mg/l			1.00	natural sources
Set'ble Solids	<0.1 ml/l/hr	<0.1 ml/l/hr	<0.1ml/l/hr		1,3	coal dust,gravel dust,soil
Zinc	0.11 mg/l	0.14 mg/l			1.00	Roofing mat'l,mat'l storage
copper	0.01 mg/l	<0.01 mg/l			1.00	Roofing mat'l, mat'l storage
iron	0.36 mg/l	0.51 mg/l			1.00	Roofing mat'l, mat'l storage
aluminum	0.57 mg/l	0.59 mg/l			1.00	Roofing mat'l, mat'l storage

Continue on Reverse

Continued from the Front

Part C - List each pollutant shown in Table 2F-2, 2F-3, and 2F-4 that you know or have reason to believe is present. See the instructions for additional details and requirements. Complete one table for each outfall.

Pollutant and CAS Number *(if available)*	Maximum Values *(include units)*		Average Values *(include units)*		Number of Storm Events Sampled	Sources of Pollutants
	Grab Sample Taken During First 20 Minutes	Flow-Weighted Composite	Grab Sample Taken During First 20 Minutes	Flow-Weighted Composite		

Part D – Provide data for the storm event(s) which resulted in the maximum values for the flow weighted composite sample.

1. Date of Storm Event	2. Duration of Storm Event *(in minutes)*	3. Total rainfall during storm event *(in inches)*	4. Number of hours between beginning of storm measured and end of previous measurable rain event	5. Maximum flow rate during rain event *(gallons/minute or specify units)*	6. Total flow from rain event *(gallons or specify units)*
11/07/2011	Not Measured	1.4	2 days		0.032 mgd

7. Provide a description of the method of flow measurement or estimate.

An ISCO sampler was used to measure depth of flow in the pipe which was converted to flow using the Manning Equation. Maximum flow rate indicated was the maximum measured during the three hour sampling event.

MISSOURI DEPATMENT OF NATURAL RESOUCRES
WATER PROTECTION PROGRAM, WATER POLLUTION BRANCH
(SEE MAP FOR APPROPRIATE REGIONAL OFFICE)

FORM D – APPLICATION FOR DISCHARGE PERMIT – PRIMARY INDUSTRIES

FOR AGENCY USE ONLY	
CHECK NO.	
DATE RECEIVED	FEE SUBMITTED

NOTE: DO NOT ATTEMPT TO COMPLETE THIS FORM BEFORE READING THE ACCOMPANYING INSTRUCTIONS

1.00 NAME OF FACILITY

Ameren Missouri Labadie Energy Center

1.10 THIS FACILITY IS NOW IN OPERATION UNDER MISSOURI OPERATING PERMIT NUMBER

MO - 0004812

1.20 THIS IS A NEW FACILITY AND WAS CONSTRUCTED UNDER MISSOURI CONSTRUCTION PERMIT NUMBER (COMPLETE ONLY IF THIS FACILITY DOES NOT HAVE AN OPERATING PERMIT).

This form is to be filled out in addition to forms A and C "Application for Discharge Permit" for the Primary Industries listed below:

INDUSTRY CATEGORY

Adhesives and sealants
Aluminum forming
Auto and other laundries
Battery manufacturing
Coal mining
Coil coating
Copper forming
Electric and electronic compounds
Electroplating
Explosives manufacturing
Foundries
Gum and wood chemicals
Inorganic chemicals manufacturing
Iron and steel manufacturing
Leather tanning and finishing
Mechanical products manufacturing
Nonferrous metals manufacturing
Ore mining
Organic chemicals manufacturing
Paint and ink formulation
Pesticides
Petroleum refining
Pharmaceutical preparations
Photographic equipment and supplies
Plastic and synthetic materials manufacturing
Plastic processing
Porcelain enameling
Printing and publishing
Pulp and paperboard mills
Rubber processing
Soap and detergent manufacturing
Steam electric power plants
Textile mills
Timber products processing

APPLICATION FOR DISCHARGE PERMIT
FORM D – PRIMARY INDUSTRIES

TABLE II	
NPDES # (*IF ASSIGNED*)	OUTFALL NUMBER
MO-0004812	001

Note: This is a non-process outfall (once-through cooling water). With the exception of heat, any pollutants present in the discharge are from the intake. See Outfall 002 for intake data.

1.30 If you are a primary industry and this outfall contains process wastewater, refer to Table A in the instructions to determine which of the GC/MS fractions you must test for. Mark "X" in column 2-A for all such GC/MS fractions that apply to your industry and for ALL toxic metals, cyanides, and total phenols. Mark "X" in column 2-B for each pollutant you know or have reason to believe is present. Mark "X" in column 2-C for each pollutant you believe to be absent. If you mark either columns 2-A or 2-B for any pollutant, you must provide the results of at least one analysis for that pollutant. Note that there are seven pages to this part, please review each carefully. Complete one table (*all seven pages*) for each outfall. See instructions for additional details and requirements.

1. POLLUTANT AND CAS NUMBER (*if available*)	2. MARK "X"			3. EFFLUENT							4. UNITS		5. INTAKE (*optional*)		
	A. TESTING REQUIRED	B. BELIEVED PRESENT	C. BELIEVED ABSENT	A. MAXIMUM DAILY VALUE		B. MAXIMUM 30 DAY VALUE (*if available*)		C. LONG TERM AVRG. VALUE (*if available*)		D. NO. OF ANALYSES	A. CONCENTRATION	B. MASS	A. LONG TERM AVRG. VALUE		B. NO OF ANALYSES
				(1) CONCENTRATION	(2) MASS	(1) CONCENTRATION	(2) MASS	(1) CONCENTRATION	(2) MASS				(1) CONCENTRATION	(2) MASS	
METALS, CYANIDE, AND TOTAL PHENOLS															
1M. Antimony, Total (7440-36-9)	☐	☐	☐												
2M. Arsenic, Total (7440-38-2)	☐	☐	☐												
3M. Beryllium, Total (7440-41-7)	☐	☐	☐												
4M. Cadmium, Total (7440-43-9)	☐	☐	☐												
5M. Chromium, Total (7440-47-3)	☐	☐	☐												
6M. Copper, Total (7550-50-8)	☐	☐	☐												
7M. Lead, Total (7439-97-6)	☐	☐	☐												
8M. Mercury, Total (7439-97-6)	☐	☐	☐												
9M. Nickel, Total (7440-02-0)	☐	☐	☐												
10M. Selenium, Total (7782-49-2)	☐	☐	☐												
11M. Silver, Total (7440-22-4)	☐	☐	☐												
12M. Thallium, Total (7440-28-0)	☐	☐	☐												
13M. Zinc, Total (7440-66-6)	☐	☐	☐												
14M. Cyanide, Total (57-12-5)	☐	☐	☐												
15M. Phenols, Total	☐	☐	☐												
DIOXIN															
2,3,7,8 – Tetra – chlorodibenzo-P-Dioxin (1764-01-6)	☐	☐	☐	**DESCRIBE RESULTS**											

APPLICATION FOR DISCHARGE PERMIT
FORM D – PRIMARY INDUSTRIES

TABLE II	
NPDES # (*IF ASSIGNED*)	OUTFALL NUMBER
MO-0004812	002

1.30 If you are a primary industry and this outfall contains process wastewater, refer to Table A in the instructions to determine which of the GC/MS fractions you must test for. Mark "X" in column 2-A for all such GC/MS fractions that apply to your industry and for ALL toxic metals, cyanides, and total phenols. Mark "X" in column 2-B for each pollutant you know or have reason to believe is present. Mark "X" in column 2-C for each pollutant you believe to be absent. If you mark either columns 2-A or 2-B for any pollutant, you must provide the results of at least one analysis for that pollutant. Note that there are seven pages to this part, please review each carefully. Complete one table (*all seven pages*) for each outfall. See instructions for additional details and requirements.

1. POLLUTANT AND CAS NUMBER (*if available*)	2. MARK "X"			3. EFFLUENT							4. UNITS		5. INTAKE (*optional*)		
	A. TESTING REQUIRED	B. BELIEVED PRESENT	C. BELIEVED ABSENT	A. MAXIMUM DAILY VALUE		B. MAXIMUM 30 DAY VALUE (*if available*)		C. LONG TERM AVRG. VALUE (*if available*)		D. NO. OF ANALYSES	A. CONCENTRATION	B. MASS	A. LONG TERM AVRG. VALUE		B. NO OF ANALYSES
				(1) CONCENTRATION	(2) MASS	(1) CONCENTRATION	(2) MASS	(1) CONCENTRATION	(2) MASS				(1) CONCENTRATION	(2) MASS	
METALS, CYANIDE, AND TOTAL PHENOLS															
1M. Antimony, Total (7440-36-9)	☑	☐	☐	<0.001	<0.3					1	mg/l	lbs/day	<0.001	<0.3	1
2M. Arsenic, Total (7440-38-2)	☑	☐	☐	<0.001	<0.3					1	mg/l	lbs/day	<0.001	<0.3	1
3M. Beryllium, Total (7440-41-7)	☑	☐	☐	<0.001	<0.3					1	mg/l	lbs/day	<0.001	<0.3	1
4M. Cadmium, Total (7440-43-9)	☑	☐	☐	<0.001	<0.3					1	mg/l	lbs/day	<0.001	<0.3	1
5M. Chromium, Total (7440-47-3)	☑	☐	☐	0.004	1.2					1	mg/l	lbs/day	0.005	1.5	1
6M. Copper, Total (7550-50-8)	☑	☐	☐	0.002	0.6					1	mg/l	lbs/day	0.004	1.2	1
7M. Lead, Total (7439-97-6)	☑	☐	☐	<0.001	<0.3					1	mg/l	lbs/day	<0.001	<0.3	1
8M. Mercury, Total (7439-97-6)	☑	☐	☐	<0.001	<0.3					1	mg/l	lbs/day	<0.001	<0.3	1
9M. Nickel, Total (7440-02-0)	☑	☐	☐	0.004	1.2					1	mg/l	lbs/day	0.008	2.4	1
10M. Selenium, Total (7782-49-2)	☑	☐	☐	<0.001	<0.3					1	mg/l	lbs/day	0.002	0.6	1
11M. Silver, Total (7440-22-4)	☑	☐	☐	<0.001	<0.3					1	mg/l	lbs/day	<0.001	<0.3	1
12M. Thallium, Total (7440-28-0)	☑	☐	☐	<0.001	<0.3					1	mg/l	lbs/day	<0.001	<0.3	1
13M. Zinc, Total (7440-66-6)	☑	☐	☐	0.018	5.4					1	mg/l	lbs/day	0.038	11	1
14M. Cyanide, Total (57-12-5)	☑	☐	☐	<0.005	<1.5					3	mg/l	lbs/day	<0.005	<1.5	3
15M. Phenols, Total	☑	☐	☐	<0.05	<15					3	mg/l	lbs/day	<0.05	<15	3
DIOXIN															
2,3,7,8 – Tetra – chlorodibenzo-P-Dioxin (1764-01-6)	☐	☐	☑	**DESCRIBE RESULTS**											

CONTINUED FROM PAGE 3

1. POLLUTANT AND CAS NUMBER (*if available*)	2. MARK "X"			3. EFFLUENT							4. UNITS		5. INTAKE (*optional*)		
	A. TESTING REQUIRED	B. BELIEVED PRESENT	C. BELIEVED ABSENT	A. MAXIMUM DAILY VALUE		B. MAXIMUM 30 DAY VALUE (*if available*)		C. LONG TERM AVRG. VALUE (*if available*)		D. NO. OF ANALYSES	A. CONCENTRATION	B. MASS	A. LONG TERM AVRG. VALUE		B. NO OF ANALYSES
				(1) CONCENTRATION	(2) MASS	(1) CONCENTRATION	(2) MASS	(1) CONCENTRATION	(2) MASS				(1) CONCENTRATION	(2) MASS	
GC/MS FRACTION – VOLATILE COMPOUNDS															
1V. Acrolein (107-02-8)	☑	☐	☐	<25	<7.5					1	ug/l	lbs/day	<25	<7.5	1
2V. Acrylonitrile (107-13-1)	☑	☐	☐	<10	<3					1	ug/l	lbs/day	<10	<3	1
3V. Benzene (71-43-2)	☑	☐	☐	<5	<1.5					1	ug/l	lbs/day	<5	<1.5	1
4V. Bis (*Chloromethyl*) Ether (542-88-1)	☐	☐	☐	*											
5V. Bromoform (75-25-2)	☑	☐	☐	<5	<1.5					1	ug/l	lbs/day	<5	<1.5	1
6V. Carbon Tetrachloride (56-23-5)	☑	☐	☐	<5	<1.5					1	ug/l	lbs/day	<5	<1.5	1
7V. Chlorobenzene (108-90-7)	☑	☐	☐	<5	<1.5					1	ug/l	lbs/day	<5	<1.5	1
8V. Chlorodibromomethane (124-48-1)	☑	☐	☐	<5	<1.5					1	ug/l	lbs/day	<5	<1.5	1
9V. Chloroethane (75-00-3)	☑	☐	☐	<10	<3					1	ug/l	lbs/day	<10	<3	1
10V. 2-Chloroethylvinyl Ether (110-75-8)	☑	☐	☐	<5	<1.5					1	ug/l	lbs/day	<5	<1.5	1
11V. Chloroform (67-66-3)	☑	☐	☐	<5	<1.5					1	ug/l	lbs/day	<5	<1.5	1
12V. Dichlorobromomethane (75-27-4)	☑	☐	☐	<5	<1.5					1	ug/l	lbs/day	<5	<1.5	1
13V. Dichloro-difluoromethane (75-71-8)	☐	☐	☐	*											
14V. 1,1 – Dichloroethane (75-34-3)	☑	☐	☐	<5	<1.5					1	ug/l	lbs/day	<5	<1.5	1
15V. 1,2 – Dichloroethane (107-06-2)	☑	☐	☐	<5	<1.5					1	ug/l	lbs/day	<5	<1.5	1
16V. 1,1 – Dichloroethylene (75-35-4)	☑	☐	☐	<5	<1.5					1	ug/l	lbs/day	<5	<1.5	1
17V. 1,2 – Dichloropropane (78-87-5)	☑	☐	☐	<5	<1.5					1	ug/l	lbs/day	<5	<1.5	1
18V. 1,2 –Dichloropropylene (542-75-6)	☑	☐	☐	**<5	<1.5					1	ug/l	lbs/day	<5	<1.5	1
19V. Ethylbenzene (100-41-4)	☑	☐	☐	<5	<1.5					1	ug/l	lbs/day	<5	<1.5	1
20V. Methyl Bromide (74-83-9)	☑	☐	☐	<10	<3					1	ug/l	lbs/day	<10	<3	1
21V. Methyl Chloride (74-87-3)	☑	☐	☐	<10	<3					1	ug/l	lbs/day	<10	<3	1

CONTINUE ON PAGE 4

* These parameters deleted per 40CFR Part 122, Appendix D. ** This parameter is 1,3-Dichloropropene per 40CFR Part 122, Appendix D

NPDES # (*IF ASSIGNED*)	OUTFALL NUMBER
MO-0004812	002

CONTINUED FROM THE FRONT

1. POLLUTANT AND CAS NUMBER (*if available*)	2. MARK "X"			3. EFFLUENT						D. NO. OF ANAL-YSES	4. UNITS		5. INTAKE (*optional*)		
	A. TEST-ING RE-QUIRED	B. BE-LIEVED PRE-SENT	C. BE-LIEVED AB-SENT	A. MAXIMUM DAILY VALUE		B. MAXIMUM 30 DAY VALUE (*if available*)		C. LONG TERM AVRG. VALUE (*if available*)			A. CONCEN-TRATION	B. MASS	A. LONG TERM AVRG. VALUE		B. NO OF ANAL-YSES
				(1) CONCENTRATION	(2) MASS	(1) CONCENTRATION	(2) MASS	(1) CONCENTRATION	(2) MASS				(1) CONCENTRATION	(2) MASS	
GC.MS FRACTION – VOLATILE COMPOUNDS (*continued*)															
22V. Methylene Chloride (75-09-2)	☑	☐	☐	<5	<1.5					1	ug/l	lbs/day	<5	<1.5	1
23V. 1,1,2,2 – Tetra-chloroethane (79-34-5)	☑	☐	☐	<5	<1.5					1	ug/l	lbs/day	<5	<1.5	1
24V. Tetrachloroethylene (127-18-4)	☑	☐	☐	<5	<1.5					1	ug/l	lbs/day	<5	<1.5	1
25V. Toluene (108-88-3)	☑	☐	☐	<5	<1.5					1	ug/l	lbs/day	<5	<1.5	1
26V. 1,2 – Trans Dichloroethylene (156-60-5)	☑	☐	☐	<5	<1.5					1	ug/l	lbs/day	<5	<1.5	1
27V. 1,1,1 – Tri – chloroethane (71-55-6)	☑	☐	☐	<5	<1.5					1	ug/l	lbs/day	<5	<1.5	1
28V. 1,1,2 – Tri-chloroethane (79-00-5)	☑	☐	☐	<5	<1.5					1	ug/l	lbs/day	<5	<1.5	1
29V. Trichloro – ethylene (79-01-6)	☑	☐	☐	<5	<1.5					1	ug/l	lbs/day	<5	<1.5	1
30V. Trichloro – fluoromethane (75-69-4)	☑	☐	☐	<5	<1.5					1	ug/l	lbs/day	<5	<1.5	1
31V. Vinyl Chloride (75-01-4)	☑	☐	☐	<5	<1.5					1	ug/l	lbs/day	<5	<1.5	1
GC/MS FRACTION – ACID COMPOUNDS															
1A. 2 – Chlorophenol (95-57-8)	☑	☐	☐	<10	<3					1	ug/l	lbs/day	<10	<3	1
2A. 2,4 – Dichloro – phenol (120-83-2)	☑	☐	☐	<10	<3					1	ug/l	lbs/day	<10	<3	1
3A. 2,4 – Dimethyl – phenol (105-67-9)	☑	☐	☐	<10	<3					1	ug/l	lbs/day	<10	<3	1
4A. 4,6 – Dinitro - O-Cresol (534-52-1)	☑	☐	☐	<10	<3					1	ug/l	lbs/day	<10	<3	1
5A. 2,4 – Dinitro – phenol (51-28-5)	☑	☐	☐	<10	<3					1	ug/l	lbs/day	<10	<3	1
6A. 2-Nitrophenol (88-75-5)	☑	☐	☐	<10	<3					1	ug/l	lbs/day	<10	<3	1
7A. 4-Nitrophenol (100-02-7)	☑	☐	☐	<10	<3					1	ug/l	lbs/day	<10	<3	1
8A. P – Chloro – M Cresol (59-50-7)	☑	☐	☐	<10	<3					1	ug/l	lbs/day	<10	<3	1
9A. Pentachloro – phenol (87-86-5_	☑	☐	☐	<10	<3					1	ug/l	lbs/day	<10	<3	1
10A. Phenol (108-952)	☑	☐	☐	<10	<3					1	ug/l	lbs/day	<10	<3	1
11A. 2,4,6 – Trichloro-phenol (88-06-2)	☑	☐	☐	<10	<3					1	ug/l	lbs/day	<10	<3	1

CONTINUE ON PAGE 5

CONTINUED FROM THE FRONT

1. POLLUTANT AND CAS NUMBER (*if available*)	2. MARK "X"			3. EFFLUENT							4. UNITS		5. INTAKE (*optional*)		
	A. TESTING REQUIRED	B. BELIEVED PRESENT	C. BELIEVED ABSENT	A. MAXIMUM DAILY VALUE		B. MAXIMUM 30 DAY VALUE (*if available*)		C. LONG TERM AVRG. VALUE (*if available*)		D. NO. OF ANALYSES	A. CONCENTRATION	B. MASS	A. LONG TERM AVRG. VALUE		B. NO OF ANALYSES
				(1) CONCENTRATION	(2) MASS	(1) CONCENTRATION	(2) MASS	(1) CONCENTRATION	(2) MASS				(1) CONCENTRATION	(2) MASS	
GC/MS FRACTION – BASE/NEUTRAL COMPOUNDS															
1B. Acenaphthene (83-32-9)	☑	☐	☐	<10	<3					1	ug/l	lbs/day	<10	<3	1
2B. Acenaphtylene (208-96-8)	☑	☐	☐	<10	<3					1	ug/l	lbs/day	<10	<3	1
3B. Anthracene (120-12-7)	☑	☐	☐	<10	<3					1	ug/l	lbs/day	<10	<3	1
4B. Benzidine (92-87-5)	☑	☐	☐	<10	<3					1	ug/l	lbs/day	<10	<3	1
5B. Benzo (a) Anthracene (56-55-3)	☑	☐	☐	<10	<3					1	ug/l	lbs/day	<10	<3	1
6B. Benzo (a) Pyrene (50-32-8)	☑	☐	☐	<10	<3					1	ug/l	lbs/day	<10	<3	1
7B. 3,4 – Benzofluoranthene (205-99-2)	☑	☐	☐	<10	<3					1	ug/l	lbs/day	<10	<3	1
8B. Benzo (ghi) Perylene (191-24-2)	☑	☐	☐	<10	<3					1	ug/l	lbs/day	<10	<3	1
9B. Benzo (k) Fluoranthene (207-08-9)	☑	☐	☐	<10	<3					1	ug/l	lbs/day	<10	<3	1
10B. Bis (2-Chloroethoxy) Methane (111-91-1)	☑	☐	☐	<10	<3					1	ug/l	lbs/day	<10	<3	1
11B. Bis (2-Chloroethyl) Ether (111-44-4)	☑	☐	☐	<10	<3					1	ug/l	lbs/day	<10	<3	1
12B. Bis (2-Chloroisopropyl) Ether (39638-32-9)	☑	☐	☐	<10	<3					1	ug/l	lbs/day	<10	<3	1
13B. Bis (2-Ethylhexyl) Phthalate (117-81-7)	☑	☐	☐	<10	<3					1	ug/l	lbs/day	<10	<3	1
14B. 4-Bromophenyl Phenyl Ether (101-55-3)	☑	☐	☐	<10	<3					1	ug/l	lbs/day	<10	<3	1
15B. Butyl Benzyl Phthalate (85-68-7)	☑	☐	☐	<10	<3					1	ug/l	lbs/day	<10	<3	1
16B. 2-Chloronaphthalene (91-58-7)	☑	☐	☐	<10	<3					1	ug/l	lbs/day	<10	<3	1
17B. 4-Chlorophenyl Phenyl Ether (7005-72-3)	☑	☐	☐	<10	<3					1	ug/l	lbs/day	<10	<3	1
18B. Chrysene (218-01-9)	☑	☐	☐	<10	<3					1	ug/l	lbs/day	<10	<3	1
19B. Dibenzo (a.h) Anthracene (53-70-3)	☑	☐	☐	<10	<3					1	ug/l	lbs/day	<10	<3	1
20B. 1,2 – Dichlorobenzene (95-50-1)	☑	☐	☐	<10	<3					1	ug/l	lbs/day	<10	<3	1
21B. 1,3 – Dichlorobenzene (541-73-1)	☑	☐	☐	<10	<3					1	ug/l	lbs/day	<10	<3	1

CONTINUE ON PAGE 6

CONTINUED FROM PAGE 5

NPDES # (*IF ASSIGNED*) MO-0004812 | OUTFALL NUMBER 002

1. POLLUTANT AND CAS NUMBER (*if available*)	2. MARK "X"			3. EFFLUENT							4. UNITS		5. INTAKE (*optional*)		
	A. TESTING REQUIRED	B. BELIEVED PRESENT	C. BELIEVED ABSENT	A. MAXIMUM DAILY VALUE		B. MAXIMUM 30 DAY VALUE (*if available*)		C. LONG TERM AVRG. VALUE (*if available*)		D. NO. OF ANALYSES	A. CONCENTRATION	B. MASS	A. LONG TERM AVRG. VALUE		B. NO OF ANALYSES
				(1) CONCENTRATION	(2) MASS	(1) CONCENTRATION	(2) MASS	(1) CONCENTRATION	(2) MASS				(1) CONCENTRATION	(2) MASS	
GC/MS FRACTION – BASE/NEUTRAL COMPOUNDS (*continued*)															
22B. 1, 4-Dichlorobenzene (106-46-7)	☑	☐	☐	<10	<3					1	ug/l	lbs/day	<10	<3	1
23B. 3, 3'-Dichlorobenzidine (91-94-1)	☑	☐	☐	<10	<3					1	ug/l	lbs/day	<10	<3	1
24B. Diethyl Phthalate (84-66-2)	☑	☐	☐	<10	<3					1	ug/l	lbs/day	<10	<3	1
25B. Dimethyl Phthalate (131-11-3)	☑	☐	☐	<10	<3					1	ug/l	lbs/day	<10	<3	1
26B. Di-N-butyl Phthalate (84-74-2)	☑	☐	☐	<10	<3					1	ug/l	lbs/day	<10	<3	1
27B. 2,4-Dinitrotoluene (121-14-2)	☑	☐	☐	<10	<3					1	ug/l	lbs/day	<10	<3	1
28B. 2,6-Dinitrotoluene (606-20-2)	☑	☐	☐	<10	<3					1	ug/l	lbs/day	<10	<3	1
29B. Di-N-Octyl Phthalate (117-84-0)	☑	☐	☐	<10	<3					1	ug/l	lbs/day	<10	<3	1
30B. 1,2-Diphenylhydrazine (*as Azobenzene*) (122-66-7)	☑	☐	☐	<10	<3					1	ug/l	lbs/day	<10	<3	1
31B. Fluoranthene (206-44-0)	☑	☐	☐	<10	<3					1	ug/l	lbs/day	<10	<3	1
32B. Fluorene (86-73-7)	☑	☐	☐	<10	<3					1	ug/l	lbs/day	<10	<3	1
33B. Hexachlorobenzene (87-68-3)	☑	☐	☐	<10	<3					1	ug/l	lbs/day	<10	<3	1
34B. Hexachlorobutadiene (87-68-3)	☑	☐	☐	<10	<3					1	ug/l	lbs/day	<10	<3	1
35B. Hexachloro-cyclopentadiene (77-47-4)	☑	☐	☐	<10	<3					1	ug/l	lbs/day	<10	<3	1
36B. Hexachloroethane (67-72-1)	☑	☐	☐	<10	<3					1	ug/l	lbs/day	<10	<3	1
37B. Indeno (1,2,3-c-d) Pyrene (193-39-5)	☑	☐	☐	<10	<3					1	ug/l	lbs/day	<10	<3	1
38B. Isophorone (78-59-1)	☑	☐	☐	<10	<3					1	ug/l	lbs/day	<10	<3	1
39B. Naphthalene (91-20-3)	☑	☐	☐	<10	<3					1	ug/l	lbs/day	<10	<3	1
40B. Nitrobenzene (98-95-3)	☑	☐	☐	<10	<3					1	ug/l	lbs/day	<10	<3	1
41B. N-Nitro-sodimethylamine (62-75-9)	☑	☐	☐	<10	<3					1	ug/l	lbs/day	<10	<3	1
42B. N-Nitroso N-Propylamine (621-64-7)	☑	☐	☐	<10	<3					1	ug/l	lbs/day	<10	<3	1

CONTINUE ON PAGE 7

1. POLLUTANT AND CAS NUMBER (*if available*)	2. MARK "X"			3. EFFLUENT							4. UNITS		5. INTAKE (*optional*)		
	A. TESTING REQUIRED	B. BELIEVED PRESENT	C. BELIEVED ABSENT	A. MAXIMUM DAILY VALUE		B. MAXIMUM 30 DAY VALUE (*if available*)		C. LONG TERM AVRG. VALUE (*if available*)		D. NO. OF ANALYSES	A. CONCENTRATION	B. MASS	A. LONG TERM AVRG. VALUE		B. NO OF ANALYSES
				(1) CONCENTRATION	(2) MASS	(1) CONCENTRATION	(2) MASS	(1) CONCENTRATION	(2) MASS				(1) CONCENTRATION	(2) MASS	
GC/MS FRACTION – BASE/NEUTRAL COMPOUNDS *(continued)*															
43B. N-Nitrosodiphenylamine (86-30-6)	☑	☐	☐	<10	<3					1	ug/l	lbs/day	<10	<3	1
44B. Phenanthrene (85-01-8)	☑	☐	☐	<10	<3					1	ug/l	lbs/day	<10	<3	1
45B. Pyrene (129-00-0)	☑	☐	☐	<10	<3					1	ug/l	lbs/day	<10	<3	1
46B. 1,2,4-Tri chlorobenzene (120-82-1)	☑	☐	☐	<10	<3					1	ug/l	lbs/day	<10	<3	1
GC/MS FRACTION - PESTICIDES															
1P. Aldrin (309-00-2)	☐	☐	☑												
2P. α-BHC (319-84-6)	☐	☐	☑												
3P. β-BHC (319-84-6)	☐	☐	☑												
4P. γ-BHC (58-89-9)	☐	☐	☑												
5P. δ-BHC (319-86-8)	☐	☐	☑												
6P. Chlordane (57-74-9)	☐	☐	☑												
7P. 4,4'-DDT (50-29-3)	☐	☐	☑												
8P. 4,4'-DDE (72-55-9)	☐	☐	☑												
9P. 4,4'-DDD (72-54-8)	☐	☐	☑												
10P. Dieldrin (60-57-1)	☐	☐	☑												
11P. α-Endosulfan (115-29-7)	☐	☐	☑												
12P. β-Endosultan (115-29-7)	☐	☐	☑												
13P. Endosulfan Sulfate (1031-07-8)	☐	☐	☑												
14P. Endrin (72-20-8)	☐	☐	☑												
15P. Endrin Aldehyde (7421-93-4)	☐	☐	☑												
16P. Heptachlor (76-44-8)	☐	☐	☑												

CONTINUED ON PAGE 8

CONTINUED FROM PAGE 7

NPDES # (*IF ASSIGNED*)	OUTFALL NUMBER
MO-0004812	002

1. POLLUTANT AND CAS NUMBER (*if available*)	2. MARK "X"			3. EFFLUENT							4. UNITS		5. INTAKE (*optional*)		
	A. TESTING REQUIRED	B. BELIEVED PRESENT	C. BELIEVED ABSENT	A. MAXIMUM DAILY VALUE		B. MAXIMUM 30 DAY VALUE (*if available*)		C. LONG TERM AVRG. VALUE (*if available*)		D. NO. OF ANALYSES	A. CONCENTRATION	B. MASS	A. LONG TERM AVRG. VALUE		B. NO OF ANALYSES
				(1) CONCENTRATION	(2) MASS	(1) CONCENTRATION	(2) MASS	(1) CONCENTRATION	(2) MASS				(1) CONCENTRATION	(2) MASS	
GC/MS FRACTION – PESTICISES (*continued*)															
17P. Heptachlor Epoxide (1024-57-3)	☐	☐	☑												
18P. PCB-1242 (53469-21-9)	☐	☐	☑												
19P. PBC-1254 (11097-69-1)	☐	☐	☑												
20P. PCB-1221 (11104-28-2)	☐	☐	☑												
21P. PCB-1232 (11141-16-5)	☐	☐	☑												
22P. PCB-1248 (12672-29-6)	☐	☐	☑												
23P. PCB-1260 (11096-82-5)	☐	☐	☑												
24P. PCB-1016 (12674-11-2)	☐	☐	☑												
25P. Toxaphene (8001-35-2)	☐	☐	☑												

Outfall 002A is not a process waste water outfall.

APPLICATION FOR DISCHARGE PERMIT
FORM D – PRIMARY INDUSTRIES

TABLE II	
NPDES # (*IF ASSIGNED*)	OUTFALL NUMBER
MO-0004812	002A

1.30 If you are a primary industry and this outfall contains process wastewater, refer to Table A in the instructions to determine which of the GC/MS fractions you must test for. Mark "X" in column 2-A for all such GC/MS fractions that apply to your industry and for ALL toxic metals, cyanides, and total phenols. Mark "X" in column 2-B for each pollutant you know or have reason to believe is present. Mark "X" in column 2-C for each pollutant you believe to be absent. If you mark either columns 2-A or 2-B for any pollutant, you must provide the results of at least one analysis for that pollutant. Note that there are seven pages to this part, please review each carefully. Complete one table (*all seven pages*) for each outfall. See instructions for additional details and requirements.

1. POLLUTANT AND CAS NUMBER (*if available*)	2. MARK "X"			3. EFFLUENT							4. UNITS		5. INTAKE (*optional*)		
	A. TESTING REQUIRED	B. BELIEVED PRESENT	C. BELIEVED ABSENT	A. MAXIMUM DAILY VALUE		B. MAXIMUM 30 DAY VALUE (*if available*)		C. LONG TERM AVRG. VALUE (*if available*)		D. NO. OF ANALYSES	A. CONCENTRATION	B. MASS	A. LONG TERM AVRG. VALUE		B. NO OF ANALYSES
				(1) CONCENTRATION	(2) MASS	(1) CONCENTRATION	(2) MASS	(1) CONCENTRATION	(2) MASS				(1) CONCENTRATION	(2) MASS	
METALS, CYANIDE, AND TOTAL PHENOLS															
1M. Antimony, Total (7440-36-9)	☐	☐	☐												
2M. Arsenic, Total (7440-38-2)	☐	☐	☐												
3M. Beryllium, Total (7440-41-7)	☐	☐	☐												
4M. Cadmium, Total (7440-43-9)	☐	☐	☐												
5M. Chromium, Total (7440-47-3)	☐	☐	☐												
6M. Copper, Total (7550-50-8)	☐	☐	☐												
7M. Lead, Total (7439-97-6)	☐	☐	☐												
8M. Mercury, Total (7439-97-6)	☐	☐	☐												
9M. Nickel, Total (7440-02-0)	☐	☐	☐												
10M. Selenium, Total (7782-49-2)	☐	☐	☐												
11M. Silver, Total (7440-22-4)	☐	☐	☐												
12M. Thallium, Total (7440-28-0)	☐	☐	☐												
13M. Zinc, Total (7440-66-6)	☐	☐	☐												
14M. Cyanide, Total (57-12-5)	☐	☐	☐												
15M. Phenols, Total	☐	☐	☐												
DIOXIN															
2,3,7,8 – Tetra – chlorodibenzo-P-Dioxin (1764-01-6)	☐	☐	☐	**DESCRIBE RESULTS**											

2.00 POTENTIAL DISCHARGES NOT COVERED BY ANALYSIS

A. IS ANY POLLUTANT LISTED IN ITEM 1.30 A SUBSTANCE OR A COMPONENT OF A SUBSTANCE WHICH YOU DO OR EXPECT THAT YOU WILL OVER THE NEXT FIVE YEARS USE OR MANUFACTURE AS AN INTERMEDIATE OR FINAL PRODUCT OR BYPRODUCT?

☑ **YES** *(LIST ALL SUCH POLLUTANTS BELOW)* ☐ **NO** *(GO TO B)*

Various trace metals may be present in coal or coal ash. With respect to chemicals used in the laboratory and solvents used for equipment maintenance, see Attachment D, Chemical Usage. Lead shot and abrasives are used during outages to remove boiler slag and is sluiced out to the ash pond.

B. ARE YOUR OPERATIONS SUCH THAT YOUR RAW MATERIALS, PROCESSES OR PRODUCTS CAN REASONABLE BE EXPECTED TO VARY SO THAT YOUR DISCHARGES OF POLLUTANTS MAY DURING THE NEXT FIVE YEARS EXCEED TWO TIMES THE MAXIMUM VALUES REPORTED IN ITEM 1.30?

☑ **YES** *(COMPLETE C BELOW)* ☐ **NO** *(GO TO SECTION 3.00)*

C. IF YOU ANSWERED "YES" TO ITEM B, EXPLAIN BELOW AND DESCRIBE IN DETAIL THE SOURCES AND EXPECTED LEVELS OF SUCH POLLUTANTS THAT YOU ANTICIPATE WILL BE DISCHARGED FROM EACH OUTFALL OVER THE NEXT FIVE YEARS, TO THE BEST OF YOUR ABILIITY AT THIS TIME. CONTINUE ON ADDITIONAL SHEETS IF YOU NEED MORE SPACE.

Variations or changes in coal supply or usage may affect Outfall 002. A different fuel supply could result in variations in ash content, characteristics, or leachability, which may result in changes of pollutant levels greater than a factor of two.

Wastestreams can also be expected to exhibit variability, not as a result of varying raw materials, processes, or products, but rather as a result fo varying influent water quality. Variability in intake water quality due to the effects of rainfall, runoff, and upstream pollutant discharges might cause discharge values on a gross basis to exceed two times the maximum values reported in Item 1.30.

3.00 CONTRACT ANALYSIS INFORMATION

WERE ANY OF THE ANALYSES REPORTED IN 1.30 PERFORMED BY A CONTRACT LABORATORY OR CONSULTING FIRM?

☑ **YES** *(LIST THE NAME, ADDRESS, AND TELEPHONE NUMBER OF, AND ANALYZED BY, EACH SUCH LABORATORY OR FIRM BELOW)*
☐ **NO** *(GO TO SECTION 4.00)*

A. NAME	B. ADDRESS	C. TELEPHONE *(area code and number)*	D. POLLUTANTS ANALYZED *(list)*
PDC Laboratories, Inc.	Florissant, MO	314-432-0550	sulfides,nitrate,voc,svoc
Pace Analytical Services	Lenexa, KS	913-599-5665	gross alpha, gross beta

4.00 CERTIFICATION

I CERTIFY UNDER PENALTY OF LAW THAT I HAVE PERSONALLY EXAMINED AND AM FAMILIAR WITH THE INFORMATION SUBMITTED INT HIS APPLICATION AND ALL ATTACHMENTS AND THAT, BASED ON MY INQUIRY OF THOSE INDIVIDUALS IMMEDIATELY RESPONSIBLE FOR OBTAINING THE INFORMATION, I BELIEVE THAT THE INFORMATION IS TRUE, ACCURATE AND COMPLETE. I AM AWARE THAT THERE ARE SIGNIFICANT PENALTIES FOR SUBMITTING FALSE INFORMATION, INCLUDING THE POSSIBILITY OF FINE AND IMPRISONMENT.

NAME AND OFFICIAL TITLE (TYPE OR PRINT)	PHONE NUMBER (AREA CODE AND NUMBER)
David Strubberg, Manager, Labadie Energy Center	314-992-8201
SIGNATURE David Strubberg	DATE SIGNED 12/22/11

LABADIE ENERGY CENTER REAPPLICATION
Index of Attachments

Attachment	Description	Page Number
A	Description of Designated Outfalls	2
B	Description of Other Discharges	5
C	Reapplication Sampling and Analysis	6
D	Chemical Usage	8
E	Section 311 and Superfund Exemption	13
F	Thermal Limitations; Section 316(a)	14
G	Intake Structure Requirements, Section 316(b)	16
H	Environmental Projects	19
I	Macroinvertebrate Control	22
J	Activities, Materials and Management Practices with Potential to Impact Storm Water Quality	23
K	Certification of Non-Storm Water Discharge	28
L	Significant Leaks or Spills	29

Attachment A
Description of Designated Outfalls

The existing permit contains eight designated outfalls; each is described below. A table of GPS locations and a map showing the locations are also included at the end of this attachment.

Outfall 001 – Non contact cooling water

Outfall 001 is the discharge from once-through cooling water systems. Water is withdrawn from the river, passed through condensers and other heat exchangers, and returned to the river. The outfall is considered a non-process wastestream. Portions of the cooling water system will be treated with biocides as described in Attachment I if a significant population of zebra mussels develops within the system.

Note that treated water is used to lubricate the circulating water and screen wash pump bearings in the intake structure. This lube water mixes with the normal pump flow and is a component of the discharge. The total flow of treated water is about 100 gpm, approximately 0.01% of the average outfall flow. Although the treated water pH is typically above 9 due to the lime treatment process, it would not affect the outfall pH due to the insignificant flow relative to the circulating water system. Also note that there may be infrequent periods when there are no circulating water pumps operating in a given intake cell and a portion of this lube water could be slowly discharged from the cell at the face of the intake structure.

Outfall 002 – "Old" Ash Pond

Outfall 002 is the discharge from the plant's wastewater treatment pond. The pond provides treatment for fly ash and bottom ash effluent, low volume wastes, sewage treatment plant (STP) effluent, and storm water runoff (SWR). The outfall is considered a process wastestream.

Ameren Missouri believes that limits set on this outfall should reflect a credit for applicable pollutants in the intake water, as allowed in our current permit. The source and receiving waters for this outfall is the same; therefore, we request a continuation of the existing net limitations.

Outfall 002A – Sewage Treatment Plant

Outfall 002A is the discharge from the extended aeration STP. Waste domestic water used throughout the facility is processed in the STP prior to discharge into the ash pond. The outfall is considered a non-process wastestream.

Outfall 003 – Storm Water Runoff

This outfall designation is representative of three similar areas, each with a separate discharge point. These areas are predominantly employee vehicle parking areas. The first discharge point drains storm water from paved employee parking and unpaved, overfill employee parking areas. The second discharge point drains storm water from the largest area of the paved employee parking lot. The second discharge point is the

designated outfall sampling point for all three of these areas and represents the most likely location to note oil and grease. The third discharge point drains part of the paved employee parking lot and a grassy area in front of the administration building. Storm Water Runoff (SWR) from all these locations is discharged to a vegetated area, which drains to the Missouri River.

Outfall 004 – Storm Water Runoff

Outfall 004 consists of a single pipe that drains SWR from a paved outdoor materials storage area. The outfall discharges to a vegetated swale which drains to the Missouri River.

Outfall 005 – Storm Water Runoff

Outfall 005 drains SWR from the paved access roads at the Water Treatment Plant and the immediately adjacent gravel lined drainage swales. Note that yard drains in the Water Treatment Plant yard route SWR to the ash pond prior to discharge via Outfall 002. Outfall 005 is a single pipe, beneath the plant entrance road, which discharges to a partially levied area on the bank of the Missouri River. The two inlets to the pipe are contained within separate concrete-walled detention structures, which are recessed into paved aprons. During routine rainfall events, these structures reduce storm water runoff velocities at the inlets, allowing localized settling.

Note Regarding Outfalls 006 – 008

Storm water runoff outfall descriptions along the western (i.e. north-south) portion of the plant entrance road have been reclassified and the discreet conveyances re-assigned to better reflect the actual receiving streams. A recent re-assessment has also resulted in delineation of additional discrete conveyances (which differ slightly from those depicted in Ameren's May 7, 2009 response to a working draft permit prepared by MDNR). See the descriptions below and the following Table and Map of SWR Conveyance Coordinates.

Outfall 006 – Storm Water Runoff

Outfall 006 is representative of seven similar discharges along the plant access road. These outfalls are all located along the plant access road, predominately at the northwestern edge of the coal pile. SWR from the paved access road and from the gravel lined drainage swale between the access road and the railroad tracks is discharged from pipes beneath the road. The inlets are contained within a concrete walled detention structure, which is recessed into a paved apron. During routine rainfall events, these structures reduce storm water runoff velocities at the inlet, allowing localized settling. These pipes drain to the ash pond discharge canal, which discharges to the Missouri River.

Note that in the previous permit application, Outfall 006 comprised a single discharge point. The other six conveyances referenced here, were previously included in the description of Outfall 007.

Outfall 007 – Storm Water Runoff

Outfall 007 is representative of eight discharges along the plant access road further remote from active plant areas than Outfall 006. All are used to drain SWR from the paved access road and from adjacent gravel covered areas between the access road and the railroad tracks. Each has a small concrete drop structure at its inlet. They discharge to a low lying area bordered on all sides by either flood control levies or the (elevated) plant entrance road. In the previous permit application these were described as part of Outfall 007.

Outfall 008 – Storm Water Runoff

The remaining four discharges along the plant access road are even more remote from active plant areas. They have no structural controls. One discharges to the plant wetland mitigation area and the remainder discharge to Labadie Creek. In the previous permit application these were described as part of Outfall 007.

Outfall Number	Discharge Point Locations	
	Latitude	Longitude
001	38 33 55.7	90 50 09.0
002	38 33 12.7	90 50 31.4
002A	38 33 35.6	90 50 08.1
003	38 33 55.0	90 50 10.9
	38 33 53.7	90 50 12.9
	38 33 52.3	90 50 15.2
004	38 33 50.6	90 50 18.1
005	38 33 48.4	90 50 21.8
006	38 33 45.4	90 50 26.9
	38 33 43.1	90 50 29.7
	38 33 32.2	90 50 30.6
	38 33 27.6	90 50 30.8
	38 33 23.6	90 50 31.0
	38 33 19.6	90 50 31.0
	38 33 15.5	90 50 31.2
007	38 32 57.4	90 50 26.9
	38 32 51.8	90 50 24.1
	38 32 49.0	90 50 24.7
	38 32 46.6	90 50 26.0
	38 32 44.1	90 50 27.8
	38 32 41.4	90 50 29.4
	38 32 38.8	90 50 31.3
	38 32 36.2	90 50 33.7
008	38 32 34.1	90 50 36.3
	38 32 31.1	90 50 40.8
	38 32 33.4	90 50 35.1
	38 32 33.3	90 50 35.2

Outfall Locations
Map taken from
USGS 7.5 Min Series
Labadie Quadrangle
2009
002A
LABADIE BOTTOM RD
LEWIS & CLARK DR
RIVERVIEW DR

Attachment B
Description of Other Discharges

Return of River Water

River water is returned to the river at two locations not designated as Outfalls at the Labadie Energy Center. Both conveyances are associated with the plant intake structure:

- Deicing line – this line is an alternative routing for a portion of the flow through Outfall 001 (non-contact cooling water). During winter months (as ambient temperature may dictate), a portion of this outfall is diverted through the deicing line and discharged at the face of the intake structure to prevent ice formation on the traveling screens and trash racks. This system may also be used infrequently, throughout the year for other operation needs. We have reviewed the effects of operating this line in other seasons and do not believe there are any significant impacts.

- Intake screen wash – A return of river water used to wash traveling screens at the intake and backwash from the screen wash strainers.

Attachment C
Reapplication Sampling and Analysis

Analysis and Flow Data

This section describes the source of data listed in Forms C, D and 2F.

- Data from the special sampling project described below is listed in the "Maximum Daily Value" columns. Where applicable, the flows monitored during the sampling period are shown here and used to calculate mass discharges under this heading.

- Values listed under the headings "Maximum 30 Day Value" and "Long Term Average Value" were compiled from data required by the existing NPDES permit. Mass discharges under these headings were calculated using the appropriate long-term average flow rates.

- "Intake" columns list data collected from a modified (four aliquot) composite (or four individual grabs, as appropriate) of river water.

Sampling and Analysis for this Reapplication

A series of water samples were collected by Ameren Missouri personnel as follows:

Outfall or Source	Date Sampled
001, 002, 002a and the Missouri River	October 25, 2011
003	November 3, 2011
004	November 7, 2011
005-008	Sampling in progress

Analyses of Outfall 001 and Missouri River samples consisted of 4 individual grabs (for non-compositing parameters: fecal coliform, pH, oil & grease, and temperature) and modified (4 aliquot) composites.

Composite samples collected for Outfall 002 consisted of 24-hour flow proportional composites and 4 individual grabs (for non-compositing parameters).

Samples analyzed for Outfall 002a included both individual grabs (for non-compositing parameters) and 24-hour flow proportional composites (consisting of 8 aliquots).

Samples were collected from Outfalls 003 and 004 (SWR) using automatic sampling equipment triggered by flow in the outfall. The equipment was set to take one sample during each of the first three hours of runoff following the rainfall event. Analyses were run on the first hour grab sample, providing "first flush" data, and a composite sample including flow weighted aliquots from samples taken during the second and third hours, when available (with the exception of pH and O&G analyses, which were not composited). Samples have not yet been collected from the remaining SWR outfalls. We will continue to attempt to sample both Outfall 005 and 006. We note that Outfall 006 is believed to be reasonably representative of Outfalls 007 and 008. These outfalls are more remote from industrial activity and have lower flows (with equivalent rainfall

amounts) making them more challenging to sample. As a result, we are not currently planning to attempt sampling of these outfalls.

Following on-site analysis of pH, samples were preserved and subsequently analyzed in accordance with 40 CFR Part 136 and 10 CSR 20-7.015(9). Samples were analyzed by Ameren Missouri's Laboratory Services Department and two contract laboratories, PDC, Inc. and Pace Environmental, Inc.

The plant output during the process outfall sampling event on October 25, 2011, was 40,847MWHrs total or approximately 65% of its rated full generating capacity.

Attachment D
Chemical Usage

Commercial chemical products used at Labadie Energy Center can be placed in three categories of usage, as they relate to wastewater discharges.

Bulk Usage

This is a group of chemicals that are used in plant systems for chemical treatment at some regular rate or interval. Table 1 lists these additives with pertinent data including approximate quantity stored on site and annual rate of use of the pure chemical, and the outfalls from which each is discharged.

Laboratory Reagents

This group consists of chemicals stored and used in the plant laboratory. The predominant characteristic of this group is the low relative usage. Laboratory drains (which may include spent reagents) discharge to the ash pond. However, only trace levels (less than 100 ug/L) are anticipated in the pond effluent (Outfall 002). At the request of the Department, Ameren Missouri will provide an inventory of these chemicals.

Other Chemical Products

This grouping includes other chemical compounds, which may be discharged and are not included in the previous lists.

Annually, approximately 1000 gallons of inhibited 18° Baume hydrochloric acid is diluted and used to chemically clean equipment and to flush the lime lines in the water treatment system. Additionally, 1000 gallons of inhibited hydrochloric acid is used to clean each of the plant wells every two years.

Various solvents are used for equipment maintenance and/or lubrication. These waste solvents are disposed of in accordance with waste management rules and regulations. Some of these solvents contain the following volatile compounds (as listed in Form D):

Chemical	CAS Number
Dichlorodifluoromethane	75-71-8
Methyl chloride	74-87-3
Methylene chloride	75-09-2
Toluene	108-88-3
Trichloroethane	71-55-6
Trichloroethene	79-01-6

Other chemical products, which may be discharged, include other miscellaneous maintenance and household cleaning products. Ameren Missouri will provide an inventory of these, at the Department's request.

Fluorescein dye is used at a rate of 50 lbs/yr to detect condenser tube leaks.

Freeze conditioning agents are applied to coal (at the point of shipment) during severe winter weather. These agents consist of various mixtures of ethylene glycol, diethylene glycol, propylene glycol, calcium chloride, magnesium chloride and sodium chloride. When used, freeze-conditioning agents are applied at a rate of approximately 2 pints per ton of coal. Freeze-conditioning agents may also be added at the Labadie Energy Center coal receiving area which may result in residuals being present in coal pile runoff. Coal pile runoff is routed to the ash pond.

Dust suppression agents are also applied to coal to reduce fugitive emissions. We currently use three Benetech products: BT-205W, BT100F and BT-4371. These products would be used in various coal handling systems with the potential for some small carryover to coal pile runoff.

Each of the four boilers at Labadie Energy Center is chemically cleaned, approximately every nine years. Boiler chemical cleaning wastes are not discharged but are evaporated at the plant by injecting them into an operating boiler. Evaporating these non-hazardous cleaning wastes is preferred over co-treatment in the ash pond. Injection of the spent cleaning solutions into the boilers vaporizes the aqueous fraction and destroys the organic cleaning agent. Testing has been conducted by the Electric Power Research Institute, on discharges from utility boilers during this process. It was shown that emissions of most metal compounds from the cleaning wastes were insignificant compared to the normal plant emissions. In fact, emissions associated with boiler cleaning waste evaporation were small compared to the normal fluctuations in coal composition and ash content.

We note that the proposed Federal Commercial Industrial Solid Waste Incinerator Rule may preclude evaporation of boiler cleaning wastes in electric utility boilers in the future.

Table 1
Bulk Chemical Usage

1.	Ammonium hydroxide (30% as NH_4OH) Quantity on site: 120 gal Used as a secondary supply of boiler treatment chemical in make-up water. Usage: 220 lbs./yr. Discharged to the ash pond (Outfall 002).
2.	Ammonium hydroxide (19% as NH_4OH) Quantity on site: 1,300 gal Used as a primary supply of boiler treatment chemical in make-up water. Usage: 9,439 gal./yr. Discharged to the ash pond (Outfall 002).
3.	Carbon dioxide Quantity on site: 26,000 lbs. Used for neutralization of ash pond effluent. Usage: 83,500 lbs./yr. Discharged to the ash pond (Outfall 002).
4.	Cationic Polymer (ECOLAB or equivalent) Quantity on site: 18,000 lbs. Used as a settling agent in raw water treatment. Usage: 117,000 lbs./yr. Discharged to the ash pond (Outfall 002).
5.	Degreaser (Formula 600) Quantity on site: 330 gal Used as a general-purpose degreaser. Usage: 9631 lbs/yr. Discharged to the ash pond (Outfall 002).
6.	Cleaner (Green Kleen) Quantity on site: 275 gal Used as a general-purpose degreaser. Usage: 2200 lbs/yr. Discharged to the ash pond (Outfall 002).

7.	Ferric sulfate solution (50%) Quantity on site: 20,000 lbs. Used as a precipitating agent in raw water treatment. Usage: 160,000 lbs./yr. Discharged to the ash pond (Outfall 002).
8.	Hydrazine solution (35%) Quantity on site: 660 gal Used as a boiler/condensate treatment chemical. Usage: 13,500 lbs./yr. Discharged to the ash pond (Outfall 002).
9.	Lime (calcium oxide) Quantity on site: 150,000 lbs. Used in raw water treatment. Usage: 900,000 lbs./yr. Discharged to the ash pond (Outfall 002).
10.	Sodium carbonate (soda ash) Quantity on site: 1,500 lbs. Chemical additive to the closed cooling water system. Usage: 1,500 lbs./yr. Discharged to the ash pond (Outfall 002).
11.	Sodium hydroxide solution (50%) Quantity on site: 10,200 gal Used to regenerate the demineralizers. Usage: 2,008,000 lbs./yr. Discharged to the ash pond (Outfall 002).
12.	Sodium molybdate dihydrate Quantity on site: 1,200 lbs. Used as a chemical additive in the closed cooling water system. Usage: 2,000 lbs./yr. Discharged to the ash pond (Outfall 002).
13.	Sodium nitrite Quantity on site: 1,750 lbs. Used as a corrosion inhibitor in the closed cooling water system. Usage: 1,750 lbs./yr. Discharged to the ash pond (Outfall 002).

14.	Sodium tolyltriazole solution (50%) Quantity on site: 35 gal Used as a chemical additive in the closed cooling water system. Usage: 75 gal/yr. Discharged to the ash pond (Outfall 002).
15.	Sulfuric acid (93%) Quantity on site: 10,200 gal Used to regenerate the demineralizers. Usage: 2,180,000 lbs./yr. Discharged to the ash pond (Outfall 002).
16.	Trisodium phosphate Quantity on site: 3,500 lbs. Used as a boiler water treatment chemical. Usage: 3,600 lbs./yr. Discharged to the ash pond (Outfall 002).
17.	Coal treatment chemicals: These chemicals are used to treat coal or coal combustion systems. Only a very small percentage of these chemicals would enter the ash pond, Outfall 002; most of the product would be consumed in the combustion process. Ethylene glycol solution (50%) Quantity on site: 12,000 gal Used as an antifreeze agent on coal. Usage: 4,000 gal/yr. Surfactants: All are used for coal dust suppression: Benetech BT-205W Quantity on site: 330 gal Usage: 4,000 gal./yr. Benetech BT-100F Quantity on site: 16,000 gal Usage: 70,000 gal./yr. Benetech BT-4371 Quantity on site: 8,000 gal Usage: 276,000 gal/yr

Attachment E
CWA Section 311 and CERCLA (Superfund) Reporting Exemptions

The chemicals listed below are used in water treatment processes in amounts exceeding their "reportable quantities" under 40 CFR Part 117.

Chemical	Average Usage (lbs/d)	Reportable Quantity (lbs)
Sodium hydroxide	5,501	1000
Sulfuric acid	4,353	1000

Ameren Missouri requests exclusion under the NPDES exemptions from Section 311 and Superfund reporting for these two compounds and all others that are reported in this application as present in continuous or anticipated intermittent discharges. The discharge of the two compounds listed above is through the ash pond (Outfall 002) for which pH monitoring will be performed. These and the other discharges for which exclusion is requested are exempt from section 311 liability by 40 CFR S117.12(a)(1) if they are in compliance with the permit and by S117.12(a)(2) or (3) if they are not. Discharges that are excluded from 311 are also excluded from Superfund. Any discharges other than those resulting from on-site spills would either result from circumstances identified in this application and be subject to treatment in the ash pond (see S117.12(c)) or would be a continuous or anticipated intermittent discharge originating within the operating or treatment systems at the plant (see S117.12(d)). These discharges are therefore excluded from section 311 and Superfund reporting and liability.

Note that even though the daily use of these chemicals exceeds the RQ, the discharge would not contain the total quantity used. This is due to acid-base and other reactions which occur during the use of these chemicals.

Attachment F
Thermal Limitations, Section 316(a)

The Labadie Energy Center cooling water discharge and the associated thermal plume was studied extensively in the late 1970s and early 1980s. The discharge is a wide mouth, low velocity outlet into an open channel connected to the Missouri River. As at the time of the prior reapplication (1998) plant operations had not changed significantly since the original studies were performed. Consequently, comprehensive additional studies did not seem warranted.

DNR approved Labadie Energy Center's 316(a) demonstration on July 15, 1977, granting a variance from thermal water quality standards (with regard to mixing zone size) and establishing alternative heat rejection limitations.

Biological Monitoring

This approval was based, in part, on biological studies, which showed that a balanced indigenous population of fish was supported in the vicinity of the plant's circulating water discharge. Ameren Services began biomonitoring in the Missouri River in the vicinity of Labadie Energy Center again in 1996, following a period without field surveys. As part of the 1998 NPDES permit reapplication we submitted a study report entitled "LABADIE PLANT BIOMONITORING, 1980-97". This report presented data from biomonitoring during this period and provided a detailed comparison between these data and the historical monitoring. Ameren believes that this study documents "the continued existence of a normal and expected distribution, composition, and diversity of the fish and benthic community" and supports "the contention that a balanced, indigenous, healthy aquatic community of fish and benthos continues to exist in the vicinity of the Labadie consistent with the typical scope of studies in defense of 316a renewals that was the norm at that time.

In response to recent questions raised by DNR, Ameren supplied two additional data comparisons that we believe are relevant. The first was a draft report dated January 2002 entitled "Comparison of Labadie Power Plant Biomonitoring Results, 1980-1985 vs. 1996-2001. This analysis compared the data set from the early 1980s to the data collection, reinitiated in 1996 into 2001. It concluded that there had been "no discernible impact to the lower Missouri River fish community in the vicinity of the Labadie Plant." The second and most recent data Ameren provided were impingement mortality comparisons between data collected in 1974-75 versus 2005-2006 which showed no significant deviation in impinged populations between the two periods inferring maintenance of a balanced, indigenous population

Heat Rejection Limitations

The current Labadie Energy Center NPDES permit contains heat rejection limitations on the cooling water discharge, Outfall 001, that are determined by Energy Center electrical generation.

We believe the existing daily maximum heat rejection limitation (11.16×10^9 BTU/hour) is adequate for monitoring thermal compliance and in conjunction with the previously

granted 316(a) variance, assures that the thermal discharge does not adversely impact the downstream aquatic community.

Warming Line Usage

As described in Attachment B, the warming (or "deicing") line conveys some of the higher temperature, Outfall 001 effluent water back to the face of the intake. The warming line flow is drawn back into the plant cooling water system. The flow, which is drawn in for reuse, has two main effects. It increases the Outfall 001 effluent temperature slightly and at the same time decreases its flow. Since these two effects balance out, use of the warming line has a negligible net effect on the heat discharged. Note that Outfall 001 flow is estimated from intake pump capacity and run time and thus does not account for the portion periodically diverted through the warming line.

Attachment G
Intake Structure Requirements, Section 316(b)

The MDNR approved the Labadie Energy Center 316(b) final report on August 8, 1977, effectively determining that the intake structure reflects "best technology available" in compliance with Section 316(b) of the Clean Water Act.

The intake structure continues to basically operate as described in the approved final report. Therefore, Ameren Missouri requests renewal of the "best available technology" approval under 316(b).

316(b) Phase II Actions

Several actions were taken in accordance with the currently suspended USEPA 316(b) Phase II rulemaking. A "Proposal for Information Collection" was submitted to the MDNR for conducting an updated assessment of impingement mortality at the Labadie Energy Center cooling water intake structure. This new data collected served to reaffirm historic impingement mortality studies. The 2005-2006 study concluded that nearly 93% of the organisms collected were gizzard shad and freshwater drum. The 1974-1975 study concluded that nearly 95% of the organisms collected were gizzard shad and freshwater drum. A summary of the 2005-2006 data collection effort is provided in Table G1 and the previous (1974-1975) impingement study data summary is included in Table G2.

Note that the 2005-2006 study was conducted prior to the installation of a full-face bar screen and debris rake system that we believe should provide for lower overall approach velocity and commensurate lower numeric impingement than that provided in Table G1.

The Phase II rulemaking also required submittal of a "Comprehensive Demonstration Study" that would provide the measures to be used for compliance with the currently suspended Phase II rulemaking performance standards. These measures were to include an appropriate range of technologies, operational, and /or restoration components; subject to cost-cost and/or cost-benefit criteria and the potential procurement of a site-specific standard, in accordance with the Phase II rulemaking. Due to the suspension of the Phase II rulemaking, the impingement mortality study was the only task completed as all other activities associated with the Comprehensive Demonstration Study were terminated.

Table G1
Labadie Energy Center 2005-2006 Impingement Data

Species	Total Number Collected	%	Total Weight Collected (grams)	%	Estimated Annual Number
Gizzard shad	4,459	64.0	43,879	60.8	66,560
Freshwater drum	2,003	28.7	14,733	20.4	27,115
Blue catfish	140	2.0	1,531	2.1	1,997
Channel catfish	119	1.7	1,498	2.1	1,657
Flathead catfish	76	1.1	1,367	1.9	1,067
Bluegill	28	0.4	281	0.4	459
Goldeye	28	0.4	1,644	2.3	441
Common carp	17	0.2	936	1.3	209
Shovelnose sturgeon	11	0.2	5,119	7.1	167
Skipjack herring	10	0.1	296	0.4	142
Lake sturgeon	9	0.1	90	0.1	121
Stonecat madtom	7	0.1	89	0.1	96
Golden redhorse	6	<0.1	49	<0.1	88
Emerald shiner	5	<0.1	15	<0.1	62
Green sunfish	5	<0.1	96	0.1	79
Shorthead redhorse	5	<0.1	51	<0.1	78
Silver carp	5	<0.1	54	<0.1	61
Red shiner	4	<0.1	12	<0.1	48
Redfin shiner	4	<0.1	9	<0.1	49
Freckled madtom	3	<0.1	26	<0.1	43
Quillback	3	<0.1	229	0.3	70
Rock bass	3	<0.1	16	<0.1	41
White bass	3	<0.1	22	<0.1	40
Bighead carp	2	<0.1	16	<0.1	22
Blue sucker	2	<0.1	6	<0.1	14
Largemouth bass	2	<0.1	25	<0.1	37
Mooneye	2	<0.1	27	<0.1	21
Sauger	2	<0.1	53	<0.1	21
Bullhead minnow	1	<0.1	3	<0.1	14
Carpsuckers	1	<0.1	2	<0.1	13
Goldfish	1	<0.1	7	<0.1	14
Minnows	1	<0.1	1	<0.1	37
River carpsucker	1	<0.1	5	<0.1	13
Speckled chub	1	<0.1	4	<0.1	13
Sturgeon chub	1	<0.1	3	<0.1	14
Warmouth	1	<0.1	8	<0.1	14
White crappie	1	<0.1	2	<0.1	14
TOTAL	6,972		72,201		100,926

Table G2
Labadie Energy Center 1974-1975 Impingement Data

Species	Total Number Collected	%
Gizzard shad	1,719	81.2
Freshwater drum	289	13.7
Flathead catfish	21	1.0
Blue catfish	15	0.7
Channel catfish	14	0.7
Chestnut lamprey	11	0.5
Catfish	9	0.4
Bluegill	7	0.3
White crappie	5	0.2
Black bullhead	4	0.2
Common carp	4	0.2
Rock bass	3	0.1
White bass	3	0.1
Minnow	2	<0.1
Northern redhorse	2	<0.1
River carpsucker	2	<0.1
Striped bass	2	<0.1
Bass	1	<0.1
Bullhead	1	<0.1
Longnose gar	1	<0.1
Mimic shiner	1	<0.1
Stonecat	1	<0.1
TOTAL	2,117	

Attachment H
Environmental Projects

The following is a summary of current environmental projects at Labadie Energy Center. None of the projects described below are required by Federal, State, or local authorities. Rather, these descriptions are being supplied as optional information as noted in Form C, Item 2.60 B.

Ash Sales

Based on a review of data from the last five calendar years (2006-2010), Labadie Energy Center generates on average approximately 390,000 tons of fly ash and 166,000 tons of bottom ash each year.

Bottom ash is wet-sluiced to the old ash pond where it can be reclaimed for beneficial use. Annual utilization of ponded bottom ash is highly variable, averaging approximately 70,000 tons per year in the last three years, although by comparison approximately 600,000 tons were removed for beneficial use in 2006. Beneficial uses of bottom ash include use as a highway traction enhancement material, and as an aggregate replacement in a commercial dry-concrete product. Ameren has contracted with the firm Charah to market bottom ash and manage ponded material sizing/sorting, removal, and transport off-site. Charah supplies Labadie bottom ash to the independently operated Quikrete Plant adjacent to the Labadie Energy Center.

Fly ash is conveyed by a dry handling system to a series of silos operated by the ash marketing firm Mineral Resource Technologies (MRT) from which it can be pneumatically transferred into trucks or railcars for transport off-site. Ash can also be transferred from silos operated by Ameren, for placement into the fly ash pond after wetting for stabilization. Dry fly ash from the Labadie Energy Center is utilized primarily as a feedstock in ready-mix concrete production. It can also be used for flowable fill, soil stabilization, and as a road base material. Based on data from the last five calendar years, over 50% of the fly ash produced annually is managed by MRT (transferred off-site for utilization) while the balance is deposited into the fly ash pond.

Ash Pond Seeps

Recently, there has been considerable press coverage regarding historic seeps associated with the "old" ash pond at the Labadie Energy Center. The presence of these surface seeps was first identified by Ameren in the 1992 NPDES renewal application. These seeps consist of (relatively) minor flows of water emanating from locations on the external slopes of the "old" ash pond berm. In that application, we described two locations, one adjacent to the ash pond discharge pipe (at Outfall 002) and a second, at a low-lying area on the south-west corner of the pond. The latter of these was eliminated several years ago, when the low-lying area was filled in anticipation of a development project.

In 2010 Ameren's own contractors, along with independent contractors of the US Environmental Protection Agency, conducted dam safety assessments as part of a national initiative focusing on coal combustion waste impoundments. Two seeps were identified at the Labadie Energy Center as part of these reviews. These included the

previously identified seep associated with the Outfall 002 discharge pipe and a section (comprised collectively several distinct seeps), along the western toe of the ash pond levee, further south along the entrance road from Outfall 002. We note that EPA's contractor did not consider either of these seeps to be urgent as they posed no near term threat to the structural integrity of the impoundment.

Ameren completed construction of two projects in November with the goal of eliminating both seeps.

An anti-seep collar was placed around the Outfall 002 discharge pipe on the western side of the pond berm to address the small amount of seepage occurring below the pipe. The majority of the excavation to install the anti-seep collar was dry and the soil encountered above the pipe consisted of clayey sand fill material. Approximately 12 inches of gravel and sand bedding material was encountered below the pipe. This material was found to be saturated and it is likely that the seepage originated from this layer. An approximate 7-foot long plug of soil mixed with bentonite was placed below the pipe and used to backfill the excavation above the pipe.

A soil-bentonite slurry wall was installed within the berm, along the southwest portion of the old ash pond to cutoff seepage occurring along this section. The wall was initially designed to be 500 feet in length and 30 feet deep. It was constructed by excavating a 30 inch wide trench to a depth of 30 feet into natural cohesive soils, while pumping bentonite slurry into the trench to prevent caving. The trench was then backfilled with a mixture of soil and bentonite. While excavating the trench, a broken rock layer was encountered that continued beyond the planned southern end of the trench. In response, the trench length was extended an additional 90 feet to avoid terminating the slurry wall in the permeable broken rock material.

By early December, flows from both seeps had been greatly reduced. Ameren expects that following 'curing' and allowing time for residual fluids to drain out of the pond berms, the seepage will continue to decrease. Recent rains have saturated the berms and thus it is difficult to judge the final effectiveness of these remedies. A follow-up inspection planned by MDNR Saint Louis Regional office staff for mid-December, was postponed to await dry weather.

Dry Bottom Ash Handling Conversion – Unit 4

A project is currently underway to convert the Unit 4 boiler to allow dry removal of bottom ash by installation of a flight conveyor system. Installation of this system will allow bottom ash to be transferred to a hopper, outside the building where it can then be transported dry, for utilization or ultimately discharged into the old ash pond, increasing the flexibility in management of this wastestream. As shown on the Water Balance Diagram, bottom ash sluicing flows are approximately 12 mgd. Conversion of Unit 4, may ultimately allow the reduction in these flows of up to 25%.

Planned Coal Combustion Waste Landfill

Ameren is currently engaged in the process to permit and construct a new landfill on plant property. It is anticipated that wastewater generated from the landfill operation will be managed via plant waste water treatment systems. However, designs have not yet progressed sufficiently to allow incorporation of these future changes into the current

reapplication. We note that one or more wastewater collection and transfer ponds will be constructed to receive storm water runoff from the active landfill cell(s) and landfill leachate collection system. While some of this wastewater may be utilized (for instance for dust control or solids wetting within the landfill), excess flows will be routed to the plant for ultimate discharge via Outfall 002. Construction of these facilities is not expected to commence for two or more years. Ameren intends to file for appropriate construction and operating permit modifications to assure timely receipt of the required authorizations.

Attachment I
Macroinvertebrate Control

Labadie Energy Center has a monitoring program to detect the settlement and growth of zebra mussels within systems vulnerable to macroinvertebrate fouling. However, we have not detected the presence of these organisms at the Plant.

In the event that treatment becomes necessary at Labadie, we will most likely implement controls similar to those used at our Mississippi River plants. These consist of treatment of intake structure cells and in-plant raw (untreated) water distribution systems, using commercial chemical products. At other Ameren Missouri plants, we are currently using Betz Spectrus CT 1300, dosed at 5-10 mg/l or Calgon H-130, dosed at approximately 5 mg/l.

The intake structure treatment process typically consists of isolating the targeted intake cells (one per unit) by lowering gates, which are behind the bar racks located on the face of the caisson, and shutting off the pumps. The molluscicide is then added to the water in the cell to achieve the target dosage (see above). This target concentration is maintained for a period of approximately eight hours, adding product as necessary, while the cell remains isolated. When treatment is complete, the gates are raised and the pumps restored to service. The residual biocide from these treatments reacts with flows from the other pumps prior to discharge via the cooling water outfall precluding the need to add detoxifying agents

Where necessary, untreated river water distribution systems (low and high pressure raw water and service water) are also treated to avoid pipe blockage. These systems are treated by pumping the molluscicide into the suction of the low and high pressure raw water pumps and maintaining the target dosage (see above) for approximately eight hours. The majority of the water from these systems eventually flows to the plant's ash pond. The residual biocide from these treatments reacts with mud, silt or sediment within the ash pond, prior to discharge, again precluding the need to add detoxifying agents.

WET testing during these operations at our other plants has demonstrated that the discharges are non-toxic.

If monitoring indicates that controls should be implemented at Labadie, we will provide appropriate notice, consistent with permit standard conditions and applicable regulations.

Attachment J
Activities, Materials and Management Practices with the Potential to Impact Storm Water Quality

Significant Materials

Twenty-four significant materials have been identified at the Labadie Energy Center as being in contact with storm water. Each significant material is numbered and described below. Their locations are shown on the attached Drawing SW2. Note that Chemical usage is also described in Attachment D.

1. Coal is located outside, in an uncovered pile. Some SWR from the coal pile is routed to the old ash pond; the remainder is contained on site. The coal is delivered by train and is unloaded at the coal receiving area.

2. Bottom ash is sluiced to the ash pond for storage, disposal or reuse.

3. Fly ash is sluiced to the new, lined fly ash pond for storage, disposal or reuse.

4. Numerous oil filled transformers are located on site. The oil is used for cooling and insulation. They can be grouped generally by size; each group is described below.

   There are thirteen large power transformers. They are the generator, starting, and unit transformers for each of the generating units. All of these are located within concrete containment areas that are sized to hold at least 45% of the transformer's oil contents. The quantities of oil in each are as follows:

Generator Transformer 1	16,700 gal
Generator Transformer 2	16,000 gal
Generator Transformer 3	16,000 gal
Generator Transformer 4	16,000 gal
Generator Transformer (spare)	16,000 gal
Starting Transformer 1	4,334 gal
Starting Transformer 2	16,855 gal
Starting Transformer 3	8,110 gal
Starting Transformer 4	8,110 gal
Unit Transformer 1	3,070 gal
Unit Transformer 2	3,070 gal
Unit Transformer 3	2,430 gal
Unit Transformer 4	2,430 gal

   There are 160 smaller transformers associated with the electrostatic precipitators. They contain an average of 150 gallons of transformer oil.

   A third group of transformers (of varying size) are located within the plant substation

and switchyard. These include 18 potential transformers with an average of 50 gallons of transformer oil.

5. Former peaking oil tank (on specification used oil) was historically stored in an above ground tank, with a capacity of 3.38 million gallons. The tank was emptied, cleaned and taken out of service in 2007.

6. Diesel fuel oil for mobile equipment is stored in an above ground, 15,000 gallon tank. The tank is located within an earthen dike that will contain 23,000 gallons (or 153% of the tank capacity). An oil truck unloading station is located at the tank. The truck driver is present during every tank truck unloading. In addition, a storeroom clerk witnesses the start and verifies completion of each unload.

7. Used oil, including non-electrical & electrical used oil is stored in an 8,000 gallon tank. The tank is located within a concrete containment that will hold 9,025 gallons (or 113% of the tank capacity).

8. Fuel and kerosene oil is stored in two 1,000 gallon UL-142 double wall, skid mount tanks located on south side of the 355,000 diesel fuel tank containment area

9. Unleaded gasoline is stored in a 2,000 gallon underground storage tank. It is monitored by an electronic leak detection system, which generates a daily printout. The tank fully complies with the state underground storage tank regulations, 10 CSR 20-10.

10. Fuel oil is stored in an above ground, 355,000 gallon tank. It is located within a concrete block, plastic lined dike that will contain 450,000 gallons (or 127%) of the tank capacity). This tank was previously used to store a blend of fuel oil and PCB contaminated electrical oil (the blend was controlled to less than 500 mg/l of PCBs), as a component of the plant's PCB oil burn system. A PCB oil mixing tank is also located within an adjacent containment. The PCB oil mixing tank and system closure was completed in 1999.

11. Periodically, the boilers are cleaned with a solution of ethylene diamine tetraacetic acid (EDTA). The chemical is brought on site in an 8,000 gallon tank trailer. The boiler cleaning wastewater is stored in four 20,000 gallon tank trailers, until it is thermally treated in an operating boiler.

12. Sodium hydroxide (50%) is stored in a 10,200 gallon above ground tank. Sodium hydroxide is loaded directly into the tank.

13. Sulfuric acid (93%) is stored in a 10,200 gallon above ground tank. Acid is loaded directly into the tank.

14. Hydrogen gas is stored in two high-pressure 130,000 cubic foot tanks and used for cooling the generators.

15. Former Ethylene glycol was historically stored in a 12,000 gallon above ground tank. It is mixed 50/50 with water and used as an anti-freeze agent on coal conveyors in the event of emergency situations. It is loaded directly into the tank. This system is currently empty and maintained in a moth-balled condition as a reservation for future use if necessary.

16. Liquid carbon dioxide is stored in two tanks, a 26,000 pound capacity tank at the ash pond discharge structure and a 12,000 pound tank in the plant's gas yard.

17. Calcium chloride is stored is several plant areas during winter months. It is spread on roadways, sidewalks and parking lots for deicing, as needed.

18. Three dust suppression products are stored on site in four vessels. Benetech BT100F is stored in two 8,000 gallon tanks. Benetech BT205W is stored in a 330 gallon tote. Benetech BT-4371 is stored in an 8,000 gallon tank.

19. A covered metal dumpster is used as a temporary collection point for asbestos. When asbestos is removed from plant equipment, it is properly bagged per 40 CFR Part 61 and stored in the dumpster until it is transported off site for disposal.

20. Molten sulfur is stored in a 260 ton tank. The sulfur is burned for flue gas conditioning. The sulfur is heated to keep it in a liquid state in the tank; it is solid and insoluble at ambient temperatures.

21. Used oil totes are stored on site and used to temporarily store oil, until it is transferred to the used oil storage tank.

22. Miscellaneous piping and plant equipment is stored on racks in a paved area located north of the Service building.

23. Approximately 60 cubic yards of a salt/bottom ash mixture is stored outside and spread on plant roads in the winter months for deicing.

24. Ammonium Hydroxide (19%) is stored in a 1,300 gallon above ground storage tank. The product is added directly into the tank.

Hazardous Wastes

Labadie Energy Center is classified as a small quantity hazardous waste generator. Seventeen satellite accumulation areas are located on site, which can receive hazardous waste for up to one year. At that time, the waste must be moved to the main storage area where it is shipped off site within 180 days in accordance with federal regulations. A mercury satellite accumulation area is also present on site.

Bulk Materials Loading Areas

Coal is received at the plant by rail in unit trains, typically consisting of 140 high capacity bottom-dump cars. The unit train slowly moves across a track hopper into which the coal is unloaded. In the receiving system a series of conveyors is used to transfer the coal from the track hopper, via the stacker tower, onto a live storage pile. A long-term coal storage pile is adjacent to the live storage pile. Dozers and scrapers transport the

coal between the two piles. The reclaim system is series of feeders and conveyors, which transfer coal from the live storage pile to a surge bin inside the plant.

Fly ash is loaded onto trucks and enclosed rail cars at on-site silo storage and loading facilities operated by Mineral Resource Technologies. Ponded fly ash is occasionally loaded in to trucks on the fly ash pond for transport to beneficial use projects. See attachment H for additional details regarding ash utilization.

Bottom ash is occasionally loaded into trucks on the bottom ash pond for transport to beneficial use projects, uses or for use at the Quikrete Manufacturing Plant located adjacent to the Old Ash Pond.

Outdoor Vehicle Maintenance and Cleaning Areas

The Labadie Energy Center has two areas where outdoor vehicle maintenance and cleaning activities take place. The coal equipment garage is located south of the water treatment plant. Plant equipment, such as coal handling equipment is routinely washed in this area. A second area is the mobile equipment shop, located south of the plant. Fork trucks, cranes, and other miscellaneous equipment are cleaned at this location. Runoff from both areas drains to the combined drain sump for transfer to the ash pond.

Fertilizers, Pesticides, Herbicides and Soil Conditioners

Liquid herbicides are spray applied to various areas in and around the site as shown on Drawing SW3. Herbicides are typically applied once in the spring and once in the summer. Several herbicides that may be used include Oust, Karmax, Evade 4FL, DiBro 2+ 2, Roundup and Krenite S. Herbicides are also applied to the rail line from the main line (2.5 miles beyond the plant) and along the track loop onsite.

The lawn area located around the entrance of the Service Building is treated with a fertilizer (Scotts), an herbicide (Pendimethaline, for crabgrass control), and a pesticide (Dylox, for grub worm control).

Management Practices

Labadie Energy Center relies on numerous routine management practices to 1) help prevent contamination of storm water runoff and 2) ensure appropriate and timely responses to spills and other unanticipated events.

The plant has a Spill Prevention, Control and Countermeasure (SPCC) Planning Guide. It describes various management practices to minimize oil spills/releases and their contact with storm water runoff. The SPCC Planning Guide also designates a plant spill coordinator who is available to provide technical assistance and advice related to spill prevention, clean-up, waste management, and reporting.

Written emergency procedures are also in place to provide guidance in addressing chemical spills and releases. Periodic training is also provided to designated plant personnel to instruct them on the proper response to such incidents.

Preventive maintenance activities include routine inspections of above ground storage tanks, valves, pipelines, flange joints, and associated equipment. Plant Operators conduct many of these daily, while making their rounds.

We are currently implementing additional measures. We believe these, in conjunction with other existing practices, constitute Best Management Practices (BMPs) to control the quality of effluent from the plant's storm water outfalls. They include:

- Periodic inspections of the drainage areas for the storm water outfalls, to initiate maintenance as may be necessary to prevent contamination;

- Discriminant use of herbicides to avoid complete loss of vegetation and excessive erosion within storm water point source drainage areas;

- Maintenance, re-grading, and/or re-vegetation of plant access roads, drainage swales, and perimeter yards to avoid excessive erosion and/or creation of new point source discharges of storm water;

- Annual cleaning of the on-site railroad tracks, to remove accumulated coal lost from the cars;

- Special designation (i.e., "Storm Water Only") for yard drains which flow to designated storm water outfalls; and

- Case-by-case evaluation of non-routine projects within the drainage areas of these outfalls, to prevent unauthorized discharges, assess the potential for storm water runoff contamination, and implement appropriate protective measures.

We believe these efforts collectively provide an acceptable alternative to numeric effluent limitations and thus re-iterate our request to:

1. To delete the <u>solids</u> limitations and routine monitoring requirements for Outfall 004; and

2. To delete <u>all numeric</u> limitations and routine monitoring requirements for Outfalls 003, 005, 006 and 007.

Attachment K
Certification of Non-Storm Water Discharge

Inspections conducted in 2011 of storm water Outfalls, 003. 004, 005 and 006, have not revealed any indication of dry weather flow.

Outfalls 007 and 008 are remote from routine operations and Plant related water and wastewater systems. Thus there is no reasonable expectation for contributions of flow unrelated to precipitation events. As a result, dry weather flow inspections were not conducted on the conveyances which comprise these outfalls.

One discharge of non-storm water was reported from outfall 006 on 4/29/2009 when an underground well water line fractured resulting in the discharge of well water to storm water outfall 006. The analyses of the discharge did not exceed the NPDES Permit numerical limitations.

One discharge of non-storm water was reported from outfall 005 on 6/28/2010 when maintenance activities associated with the primary water treatment clarifier resulted in a spill of raw Missouri River water outside a clarifier. The analyses of the discharge did not exceed the NPDES Permit numerical limitations.

Attachment L
Significant Leaks or Spills

Based on a review of our records, Three "non-reportable" spills occurred in the last three years at the Labadie Energy Center are described below.

On September 17, 2010, approximately 170 gallons of 93% sulfuric acid was spilled as a result of a system malfunction from a temporary supply hose established for maintenance purposes. The spill drained to the combined drain sump. The combined drain sump pumps were turned off for the spill containment and cleanup process. The spill area was neutralized with soda ash and washed down with water. The pH of the combined drain sump was tested to be between 6.0 and 9.0 before discharge to the old ash pond.

On November 24, 2010, approximately 750 gallons of #2 fuel oil was spilled in the "D" tank containment area from a temporary tank set up established for the cleaning and inspection of the "C" fuel oil tank. The contaminated soil was excavated and disposed of in an approved landfill.

On January, 24, 2011, approximately 1,500 gallons of #2 fuel oil spilled into the lined, concrete block containment area of the "C" fuel oil tank from a tank overfill. The spilled fuel oil was recovered and used for fuel. The containment area was treated with an oil digesting enzyme product.