Although water quality is similar for a number of constituents, there is a vast difference in the levels of uranium and Ra-226. To underscore this difference, Radium-226 and uranium values were taken from Table 5.2 Statistical Summary of Water Quality in Area Wells and Table 5.4 Statistical Summary of Baseline Wells and placed in the table below.

	Ra-226 (pCi/l)	Uranium (mg/l)	EPA Drinking Water Standard*
Permit Area Average	608	0.520	5 pCi/l (Ra-226)
Permit Area High	3,160	6.68	0.03 mg/l (Uranium)
AOR Area High	29	0.009	
AOR Average	2.31	0.003	

*Maximum Contaminant Level (MCL).

The average Ra-226 concentration in the permit area is approximately122 times higher than the drinking water standard, and the average uranium level is approximately 17 times higher than the standard. The highest Ra-226 level of 3,160 pCi/l is 632 times higher than the 5 pCi/l standard, and the highest uranium value is 223 times over the standard. Clearly, compared to background levels recorded in the AOR, permit area baseline wells have very poor water quality with respect to uranium and Ra-226.

[redacted]

In stark contrast, the average uranium and Ra-226 levels in the AOR meet EPA Drinking Water Standards. For example, the average uranium level of 0.003 mg/l is 10 times lower than the standard. Although slightly elevated, Ra-226 (2.3 pCi/l) is only 46% of the 5pCi/l MCL.

In summary, it has been demonstrated that although water quality in a uranium ore trend may be similar in some respects to water quality in non-mineralized areas, it differs significantly in terms of uranium and Ra-226 concentrations.

[redacted]

[redacted]

Table 5.3 Baseline Wells within the Permit Boundary (Continued)

	RBLC-7	RBLD-1	RBLD-5	RBLD-6	**EPA Standards**
Ca	95	88	73	90	**NS**
Mg	17.0	19.0	18.0	17.0	**NS**
Na	96	106	114	106	**NS**
K	4.8	4.5	7.1	4.7	**NS**
CO3	0	0	0	0	**NS**
HCO3	328	334	295	318	**NS**
SO4	38	10	19	13	**250**
Cl	146	164	164	168	**250**
NO3-N	<0.01	<0.01	<0.01	<0.01	**10**
F	0.55	0.49	0.39	0.51	**4.0**
SIO2	30.0	29.0	30.0	34.0	**NS**
TDS	540	598	575	623	**500**
EC µmhos	1010	996	998	978	**NS**
ALK	269	274	242	261	**NS**
pH s.u.	7.48	7.48	7.49	7.57	**6.5 to 8.5**
As	0.001	0.003	0.010	0.002	**0.01**
Cd	0.0001	0.0001	0.0001	0.0001	**0.005**
Fe	0.01	0.02	0.01	0.01	**0.3**
Pb	0.001	<0.001	0.001	0.001	**0.15**
Mn	0.02	0.01	0.01	0.01	**0.05**
Hg	<0.0002	<0.0002	<0.0002	<0.0002	**0.002**
Mo	<0.1	<0.1	<0.1	<0.1	**NS**
Se	0.006	<0.001	<0.001	<0.001	**0.05**
U	0.020	0.037	0.035	0.019	**0.03**
Ammonia	<0.1	<0.1	<0.1	<0.1	**NS**
Ra-226 pCi/l	18+/-1	50+/-1	442+/-2	1040+/-10	**5pCi/l**

Note: Units are expressed in mg/l unless otherwise noted.

Table 6.2 Permit Area Water Levels

Baseline Well	Water Level (Feet below Surface)
RBLA-1	63.18
RBLA-2	82.0
RBLA-3	79.0
RBLA-4	73.5
RBLA-5	72.5
RBLB-1	71.5
RBLB-2	55.0
RBLB-3	69.3
RBLB-4	70.3
RBLB-5	70.2
RBLC-1	74.5
RBLC-2	67.8
RBLC-3	62.5
RBLC-4	57.9
RBLC-7	76.0
RBLD-1	56.0
RBLD-2	81.6
RBLD-3	
RBLD-5	89.0
RBLD-6	89.0

[redacted]

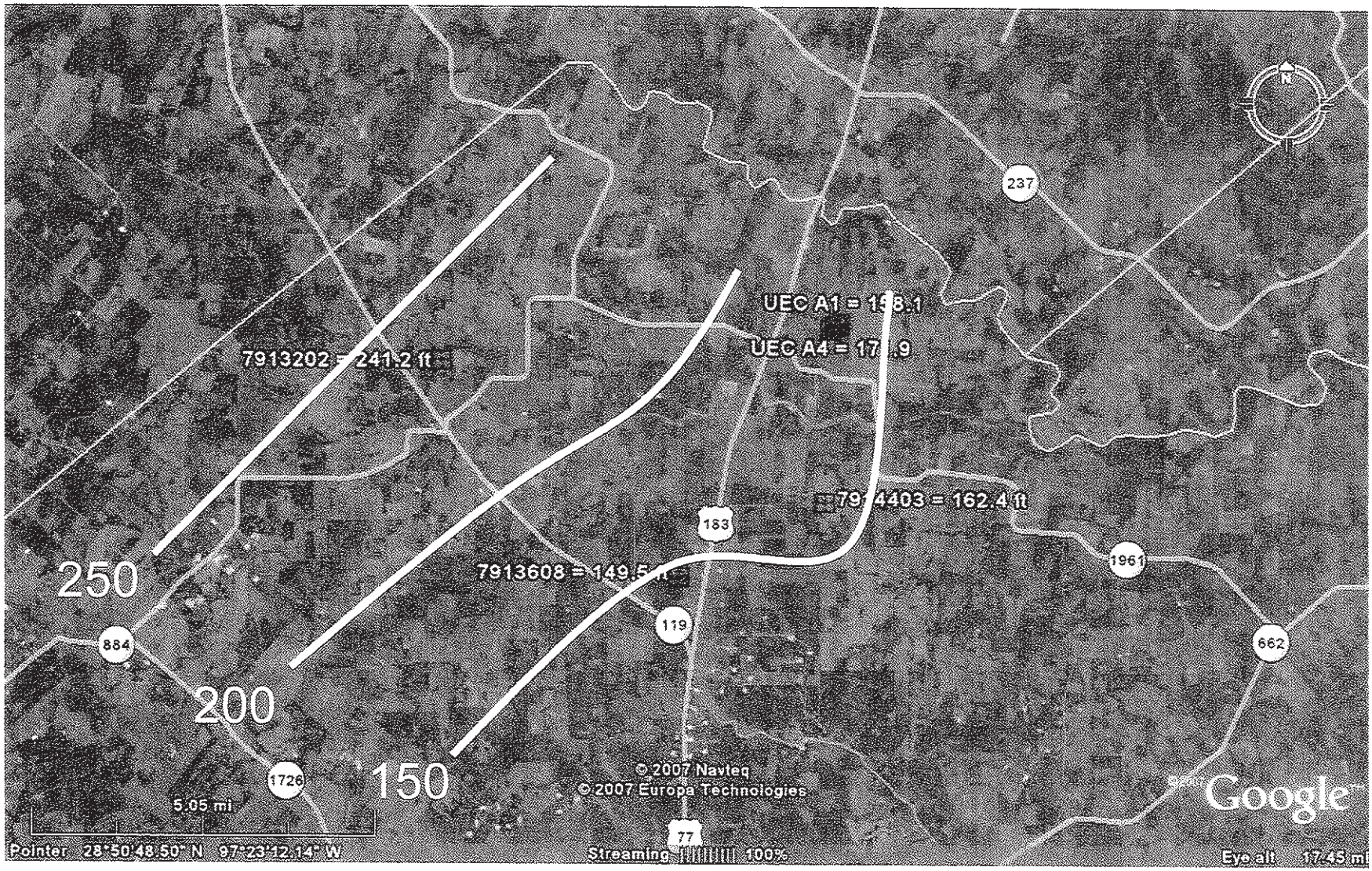

Figure 6.23 UEC regional potentiometric surface (feet). Data points: UEC A1 = 158.1 ft, UEC A4=171.9 ft
7913202 = 241.2 ft, 7914403=162.4 ft
7913608=149.5 ft

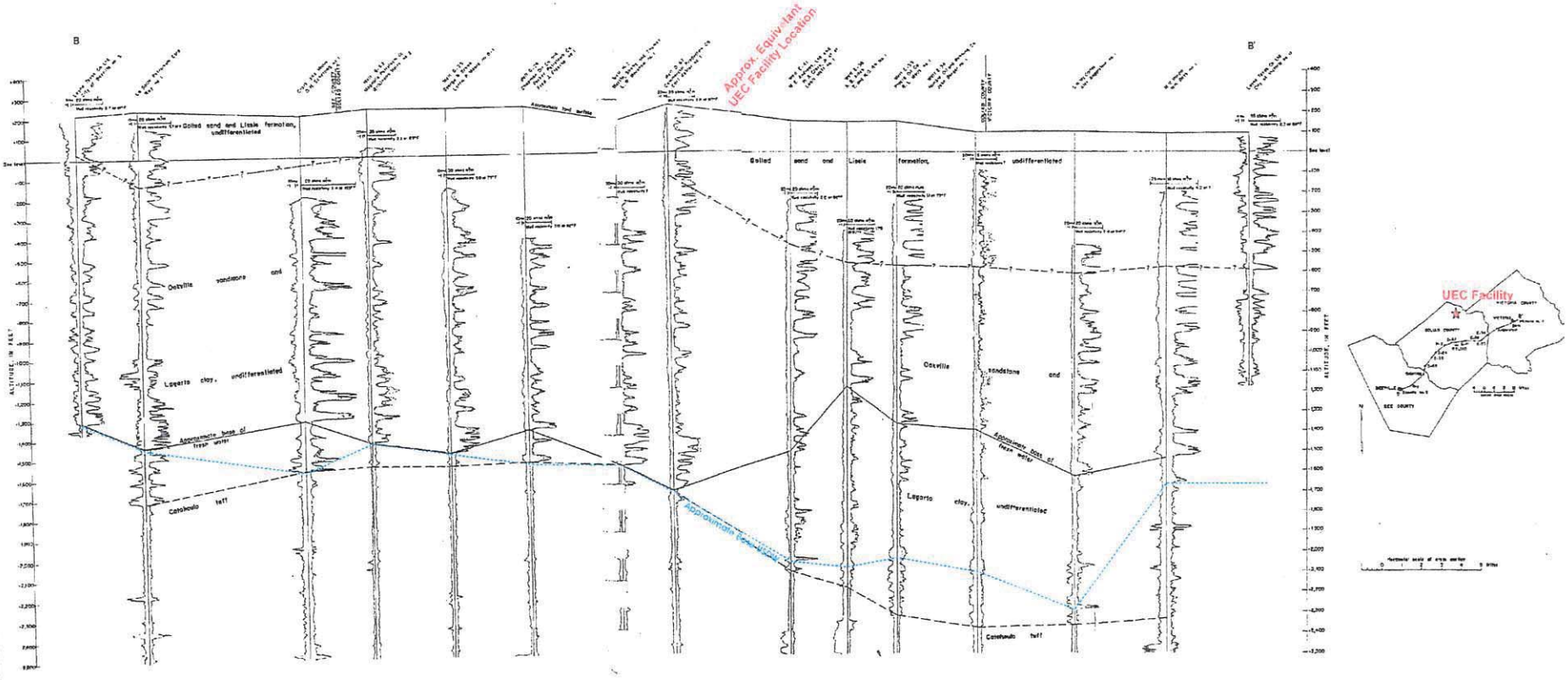

Source: Dale, O. C., Moulder, E. A., and Arnow, T., 1957, Groundwater Resources of Goliad County, Texas, Texas Board of Water Engineers Bulletin 5711, 93 pp.

REV. 1-8-08

FIGURE 6.6

Regional Strike Oriented Hydrogeologic Cross-Section Goliad County, Texas

Prepared For:

Uranium Energy Corp

DRAWN BY:	DATE:
Weegar-Eide & Associates, LLC	7/10/07
DRAWING NO: Fig 6-6.cdr	SCALE: See Scale Bar

13.0 Restoration Cost Estimate
Well Plugging

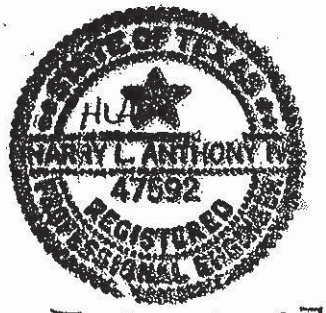

7-27-2007

The affixed seal covers the entire contents of this chapter

13.0 Restoration: Well Plugging and Abandonment

The cost estimate given here is preliminary and will of course become more refined when UEC is nearer to completing the first production areas. The total estimated cost was derived by multiplying the total footage for all wells by a cost per foot. As required by TCEQ, the cost estimate assumes that a third party would be contracted for this work.

The cost per foot reflects labor, equipment, per diem, cement and materials. The most current surety posted at TCEQ for this work is approximately $1.10 per foot. The estimated total footage that UEC expects to have in cased wells is 798,600 feet. It should be noted that this estimate is a little on the high side to allow for contingencies. As noted above, the total footage includes all wells (injection, production and monitor wells).

UEC is planning recovery operations in four distinct sand units; the A, B, C and D Sands. Following is a breakdown of the estimated number of wells that would be completed.

	Total Depth (Feet)	Estimated Number of Wells	Total Footage (Feet)
A-Sand:	110	1100	121,000
B-Sand:	190	660	125,400
C-Sand	245	660	161,700
D-Sand	355	1100	390,500
Total:	----	3520	798,600

Multiplying the total footage by a cost factor of $1.10/foot gives a total estimated cost of $878,460.00

Prior to drilling any Class III wells after the permit is issued, UEC will post financial surety in a form acceptable to TCEQ. The rules on financial surety are given in 30 TAC §331.144-147.

13.0 Restoration: Well Plugging and Abandonment

The cost estimate given here is preliminary and will of course become more refined when UEC is nearer to completing the first production areas. The total estimated cost was derived by multiplying the total footage for all wells by a cost per foot. As required by TCEQ, the cost estimate assumes that a third party would be contracted for this work.

The cost per foot reflects labor, equipment, per diem, cement and materials. The most current surety posted at TCEQ for this work is approximately $1.10 per foot. The estimated total footage that UEC expects to have in cased wells is 798,600 feet. It should be noted that this estimate is a little on the high side to allow for contingencies. As noted above, the total footage includes all wells (injection, production and monitor wells).

UEC is planning recovery operations in four distinct sand units; the A, B, C and D Sands. Following is a breakdown of the estimated number of wells that would be completed in the initial production areas.

	Total Depth (Feet)	Estimated Number of Wells	Total Footage (Feet)
A-Sand:	110	245	26,950
B-Sand:	190	360	68,400
C-Sand	245	566	138,670
D-Sand	355	963	341,865
Total:	----	2134	575,885

Multiplying the total footage by a cost factor of $1.10/foot gives a total estimated cost of $633,470.00. Prior to drilling any Class III wells after the permit is issued, UEC will post financial surety in a form acceptable to TCEQ. The rules on financial surety are given in 30 TAC §331.142-144.

11.0 Hydrologic Testing

RECEIVED

DEC 1 1 2007

WASTE PERMITS DIVISION
TEXAS COMMISSION ON
ENVIRONMENTAL QUALITY
LLH

STATE OF TEXAS
Randall G. Larkin
Geology
No. 1210
LICENSED
PROFESSIONAL GEOSCIENTIST

The affixed seal covers the entire contents of this section.

November 30, 2007

10.0 Fluid Handling Capacity vs. Requirements

Using TCEQ's Technical Guide III, a detailed assessment was completed for the project's fluid handling requirements. Table 10.1 provides a comprehensive summary of the fluid sources and their respective volumes throughout the life of the project. A measure of conservatism, in the form of assumptions and in the project design, is built into the estimates to allow for intangibles, and to provide extra assurance that the overall fluid handling capacity will exceed the requirements. A few examples of the added measure of protection are given below.

Referring back to Section 9.4, Spill Control, it can be seen that the process pad will be designed with a 1 foot high curb around it. Normally ISR process facilities have fluid retention curbs that stand 6 inches in height. Doubling the curb height significantly increases the pad's emergency fluid holding capacity. In addition, when the holding capacities of the sumps and waste storage tanks are considered, the adequacy of the designed retention capacity is clear. To further emphasize the overall fluid retention and disposal capacity of the facility, it should be remembered that as rain falls on the pads it will flow into the collection sumps and be immediately pumped into the disposal tanks and then sent to the disposal well (s). Because of this steady removal, it is highly unlikely that water would overtop the 1 foot curbs.

Another conservative assumption is the rainfall factor. It is assumed that 39,000 gallons of rain will fall on the process pads in every month of the year throughout the life of the project. This amount of rainfall is equivalent to 2.5 inches per month. Since there will be many months with just a fraction of this amount and some months that exceed 2.5 inches, the monthly fluid allowance is in excess of what will actually occur.

UEC plans to permit at least two Class I Non-hazardous waste disposal wells. The waste disposal capacity used in Table 10.1 is based on a single 250 gpm well. Having at least one additional well will significantly increase the project's disposal capacity. Thus in actuality there will be more capacity than is shown in the table.

Other compelling reasons for not relying on a single well are summarized below.

- In the unlikely event of losing the first well, a second or third well would provide vital backup. Having immediate backup gives assurance that project operations, uranium recovery and restoration, will not be interrupted.
- Proper maintenance of a waste disposal well may involve a workover that would require taking the well off line for a period of time. Again, having a backup well would allow activities to continue without interruption.
- Having a surplus of disposal capacity allows for aggressive groundwater restoration. UEC is committed to restoring groundwater as expeditiously as possible.

In summary, Table 10.1 shows that the project will have a surplus of capacity to handle and dispose fluids.

Chapter 9.0 Wellfield and Process Facility Details

[redacted]

STATE OF TEXAS
HLA
HARRY L. ANTHONY IV
47592
REGISTERED
PROFESSIONAL ENGINEER

7-27-2007

The affixed seal covers the entire contents of this chapter

Chapter 9.0 Wellfield and Process Details

The affixed seal covers the entire contents of this chapter.

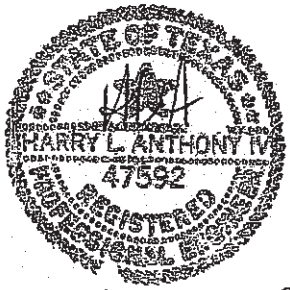

Jan 30, 2008

For process control purposes, pregnant lixiviant from each production wellfield is metered and totaled. Average and maximum daily rates and volumes of injection vary according to the formation, plant capacity and wellfield size. Injection pressure does not exceed 0.40 psi per foot of well depth nor does it exceed the internal burst rating of the casing. In addition, records on daily flow rates of individual production wells are maintained.

9.2 Process Facility Description

Figure 9.1 shows the layout of the process plant equipment, dryer building, chemical storage area, yellowcake product storage and passageways. The plant is a down flow design that will have a maximum lixiviant flow rate of 5,000 gpm. At start up, however, Uranium Energy Corp expects to be operating at a flow rate of 1,000 to 1,500 gpm. Later, as additional wellfield production areas are brought into service, the maximum design flow rate of 5,000 gpm will be reached.

Pregnant lixiviant will be received from the wellfields through large-diameter trunk line. This line branches into two lines that feed the down flow sand filters. The filters are 6 feet in height (straight side) and 11 feet in diameter. The down flow sand filters remove suspended particles with a particle diameter of 2 microns or greater from the lixiviant. Normally, three of the filters will be in operation simultaneously while the forth is being back-washed. Although they are referred to as sand filters, their content may consist of fine garnet, pea gravel and larger gravel. It was noted above that the sand filters are back-washed. Back washing is necessary to maintain the effectiveness of the sand filters. Effluent from this cleaning process will be contained in the backwash tanks. The Backwash Tanks are cone bottomed. Backwash fluids enter through the side, just above the cone bottom. Sand and silt collect in the bottom cone and are removed when a layer begins to accumulate. Clear water exits the top of the tank after flowing upward through layers of settled and fine suspended solids.

Figure 9.1 (see Map Appendix)

The suspended solids impinge and coalesce with the upward moving solids, enhancing overall solids removal. Two backwash tanks are arranged in parallel, thereby reducing velocity for maximum solids removal.

As shown in Figure 9.1 there are 10 IX vessels. The IX vessels are 6 feet high, measured along the straight side by 11 feet in diameter, and capped with 2:1 elliptical heads. Each vessel will contain approximately 500 ft^3 of Dow 21-K, 16-30 mesh resin, or its equivalent. The vessels are arranged in groups of two. Each group will have a lead vessel and a trailing vessel, and each group has a maximum flow rate of 1250 gpm. When loaded with uranium, resin is hydraulically transferred from the lead vessel to an empty elution vessel. Previously stripped resin is transferred from a second elution vessel to the empty IX vessel. By the use of valves, the vessel containing the stripped resin is placed in the trail position and the vessel with resin previously in the trail position is moved to the lead position.

Solution entering the vessel passes through an 8 inch diameter distributor pipe that divides the flow into four streams. The streams flow downward through the resin and exit via a lower collection header. To prevent resin loss, the collection header is equipped with drop pipes that are fitted with fine mesh screens. The drop pipes are located equally throughout the resin bed to prevent channeling of lixiviant. After passing through the vessel, spent solution is routed by pressure through piping to injection booster pumps.

Four centrifugal pumps, each with a 1250 gpm flow rate, will be connected in parallel to an outlet header. This configuration allows a combination of pumping choices, depending on flow rate. As fluid exits the pumps, it passes through resin traps. The design has four resin traps (each with a 1250 gpm capacity).

The suspended solids impinge and coalesce with the upward moving solids, enhancing overall solids removal. Two backwash tanks are arranged in parallel, thereby reducing velocity for maximum solids removal.

As shown in Figure 9.1 there are 10 IX vessels. The production IX vessels are 6 feet high, measured along the straight side by 11 feet in diameter, and capped with 2:1 elliptical heads. The restoration IX columns are 10 feet in diameter. Each vessel will contain approximately 500 ft^3 of Dow 21-K, 16-30 mesh resin, or its equivalent. The vessels are arranged in groups of two. Each group will have a lead vessel and a trailing vessel, and each group has a maximum flow rate of 1250 gpm. When loaded with uranium, resin is hydraulically transferred from the lead vessel to an empty elution vessel. Previously stripped resin is transferred from a second elution vessel to the empty IX vessel. By the use of valves, the vessel containing the stripped resin is placed in the trail position and the vessel with resin previously in the trail position is moved to the lead position.

Solution entering the vessel passes through an 8 inch diameter distributor pipe that divides the flow into four streams. The streams flow downward through the resin and exit via a lower collection header. To prevent resin loss, the collection header is equipped with drop pipes that are fitted with fine mesh screens. The drop pipes are located equally throughout the resin bed to prevent channeling of lixiviant. After passing through the vessel, spent solution is routed by pressure through piping to injection booster pumps.

Four centrifugal pumps, each with a 1250 gpm flow rate, will be connected in parallel to an outlet header. This configuration allows a combination of pumping choices, depending on flow rate. As fluid exits the pumps, it passes through resin traps. The design has four resin traps (each with a 1250 gpm capacity).

9.3 Process Description

To aid the reader in following the process description given here, please refer to Figure 9.2 Goliad Plant Process Flow Diagram. The process begins when pregnant lixiviant is received from the wellfield. Uranium is removed from the lixiviant and concentrated by ion exchange (IX). The IX vessels contain a polymeric resin chemically designed to capture complexes of uranyl carbonate ions. Therefore, as pregnant lixiviant passes downward, over the resin, uranium is removed from the stream. At this point, the lixiviant flows from the IX vessels through resin traps. Stripped of its uranium, the barren solution, as described earlier, is refortified before being returned to the wellfield. Also noted earlier, a portion of the barren lixiviant can be treated with R.O. and chemically refortified before it is re-injected in the wellfields. In this case, the purified stream is used as mining solution and the reject stream is sent to the waste storage tanks for disposal via deep well injection. It should also be remembered that a small percentage of barren solution is disposed of to maintain a cone of depression in the wellfield.

When the IX resin becomes maximally loaded with uranyl dicarbonate, the vessels are taken off-line, the resin is removed from the vessel, and the resin is treated for the recovery of uranium - - this part of the process is called elution. A solution, rich in chloride ions (eluant), is used to strip the loaded resin of uranium. Three tanks measuring 14 feet in diameter by 18 feet in height are used for barren, recycle and make-up eluant storage. Chloride ions in the eluant solution exchange with uranyl dicarbonate ions on the resin sites causing the uranium dicarbonate ions to leave the resin sites and become soluble in the eluant solution, forming a pregnant eluant. Following elution, the resin is placed back on line to repeat the process of capturing uranium.

Fig. 9.2 Goliad Plant - Process Flow Diagram

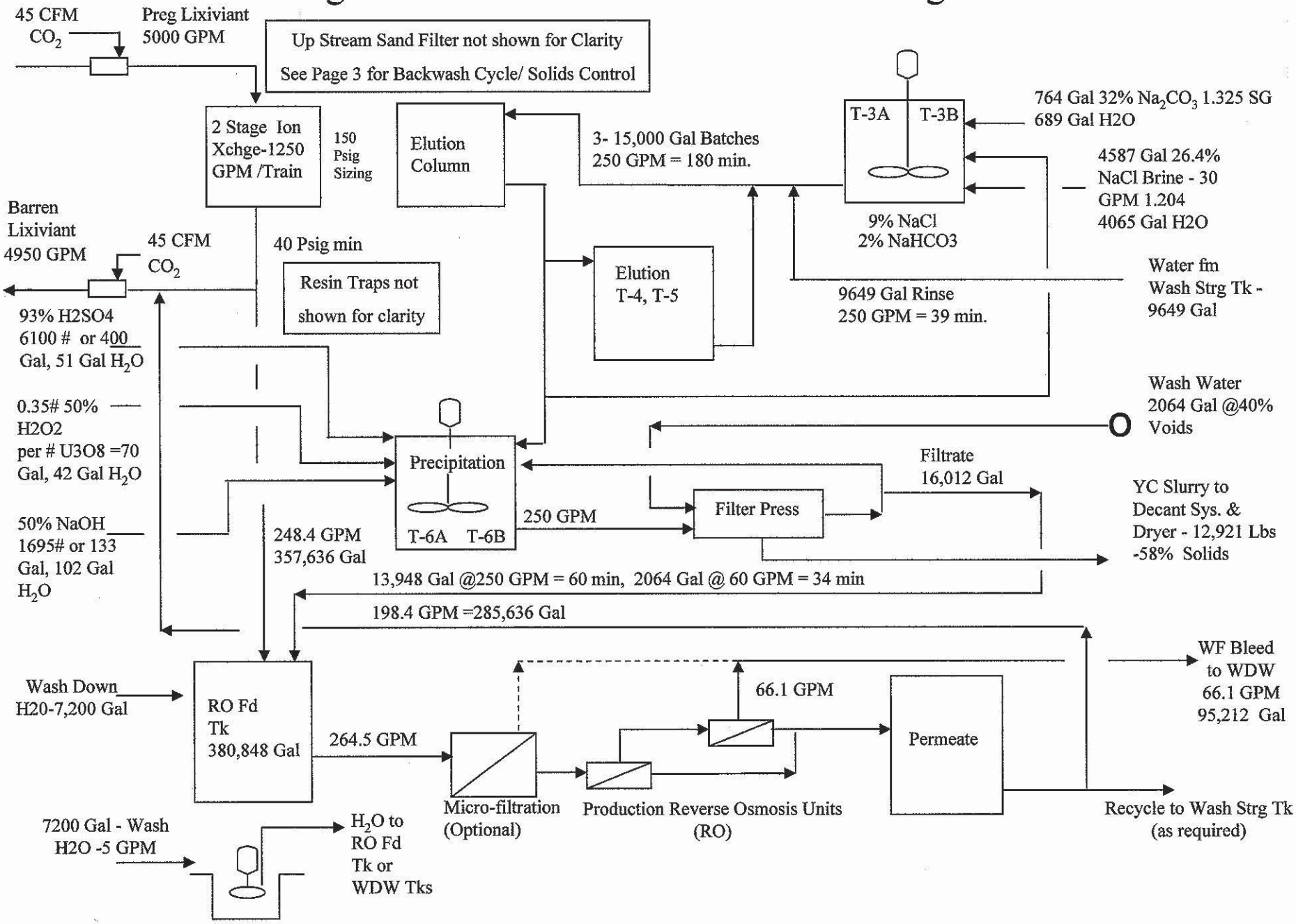

Fig. 9.2 Goliad Plant - Process Flow Diagram (Continued)

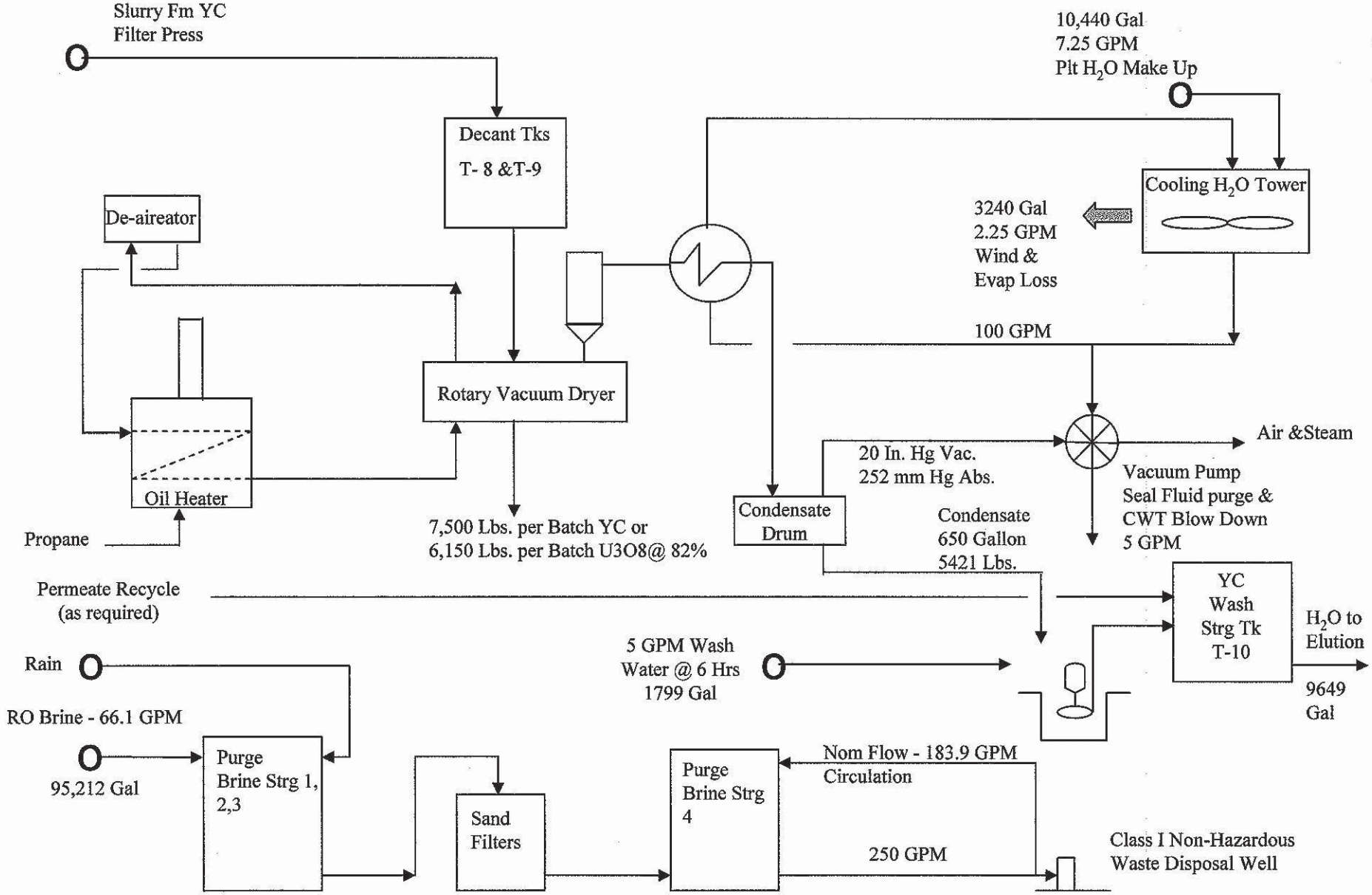

Fig. 9.2 Goliad Plant - Process Flow Diagram (Continued)

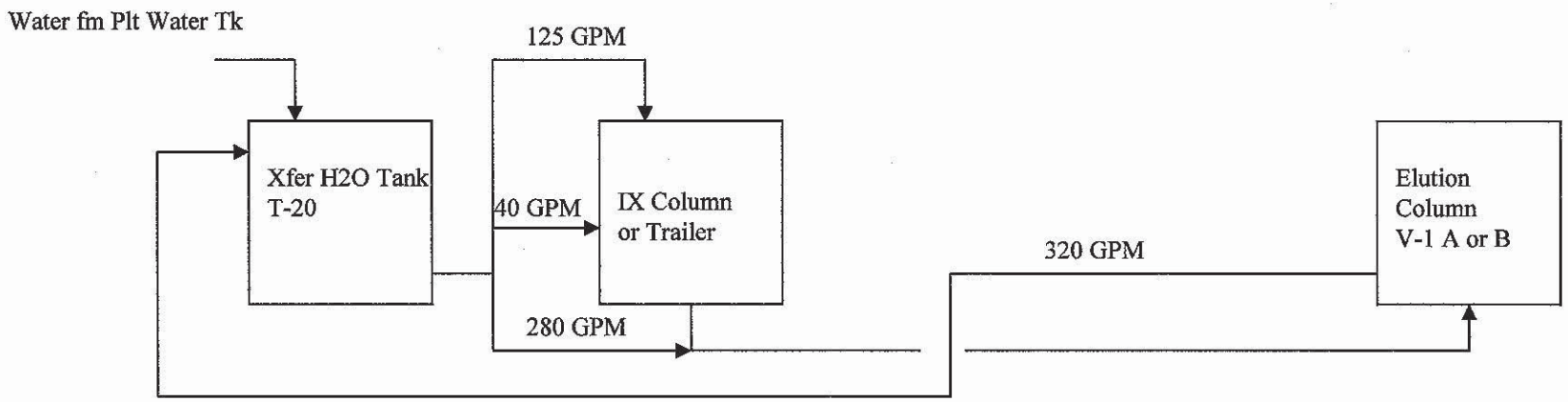

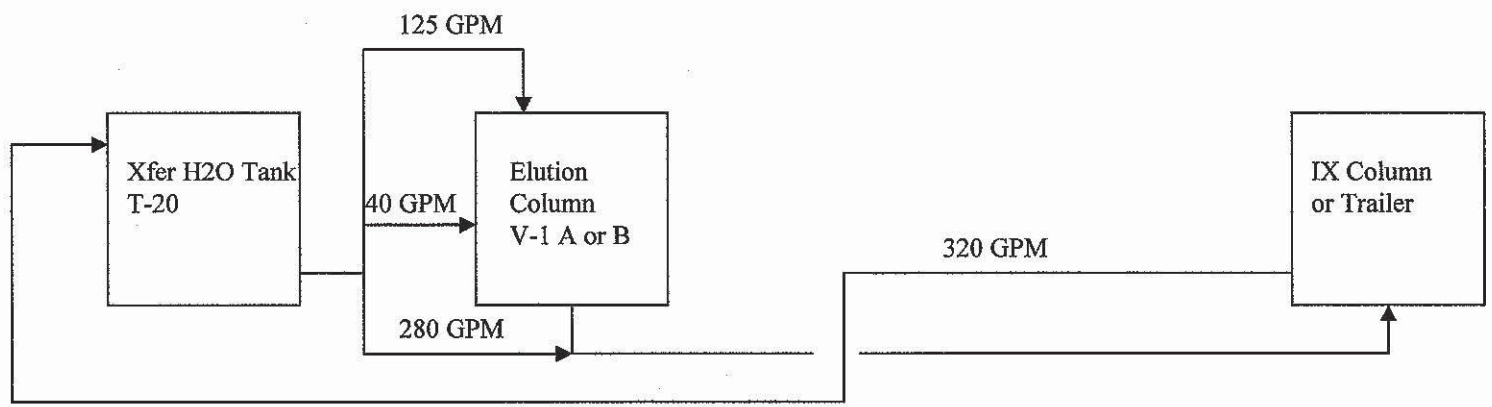

Fig. 9.2 Goliad Plant - Process Flow Diagram (Continued)

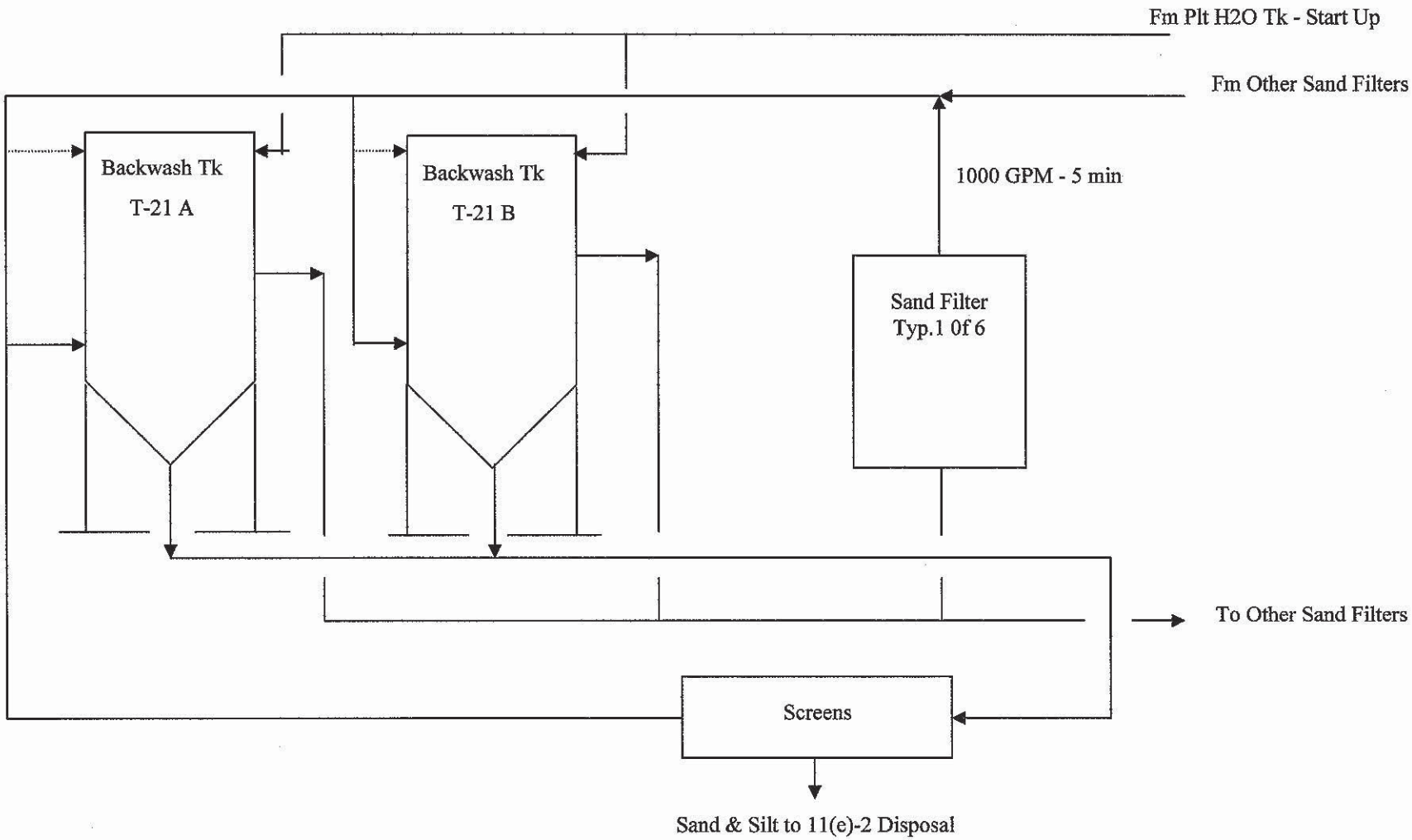

Fig. 9.2 Goliad Plant - Process Flow Diagram (Continued)

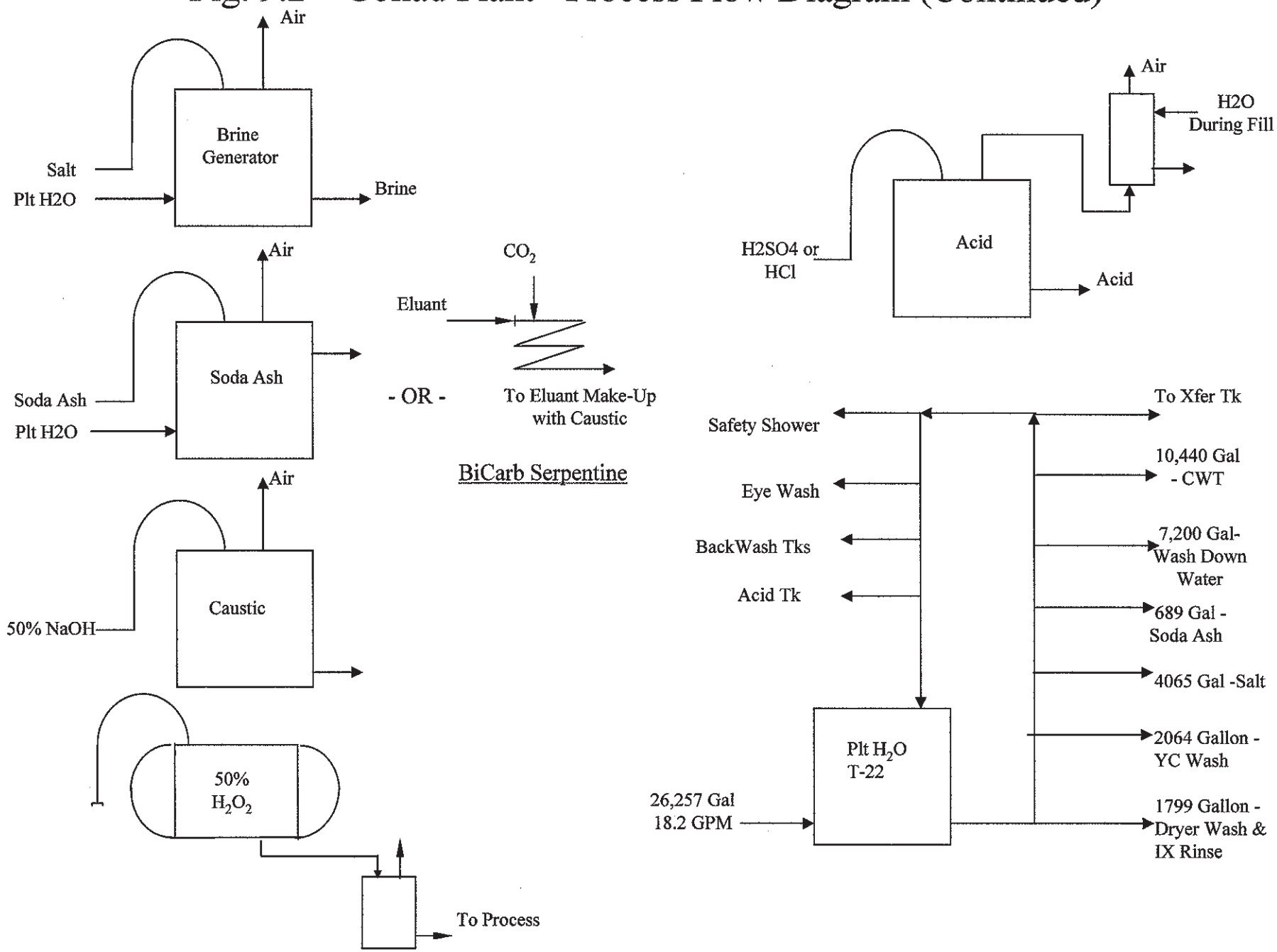

For the process just described, loading and elution of uranium is summarized in the following equation:

Loading: $2RCl + UO_2 (CO_3)_2^{-2} \longrightarrow R_2UO_2 (CO_3)_2 + 2Cl$

Elution: $R_2UO_2 (CO_3)_2 + 2Cl^- + HCO_3 + OH \longrightarrow 2RCl + UO_2 (CO_3)_3^{-4}$

H_2O

Note: R denotes resin

The pregnant eluate is either temporarily held in a storage tank for use in removing additional uranium from other beds of resin or is routed to the system's precipitation phase. Two batch precipitation tanks are the primary components of the system. The tanks contain internal baffles and agitators for mixing. Pregnant eluant is batch precipitated following the procedure described below.

During precipitation, the uranium in the pregnant eluant is phase-converted from a dissolved ion to a solid. Pregnant eluant is treated with hydrochloric or sulfuric acid, breaking down the uranyl dicarbonate, producing carbon dioxide gas and soluble uranyl ions. Hydrogen peroxide is added to initiate oxidation of the uranyl ions. Once oxidized, the ions form insoluble uranyl peroxide. Sodium hydroxide is then added to neutralize the by-product of the reaction acid, enhancing crystal growth. The precipitation process in equation form is as follows:

Acidification: $UO_2 (CO_3)_3^{-4} + 6HCl \longrightarrow UO_2^{+2} + 6Cl^- + 3H_20 + 3CO_2 (g)$

Oxidation: $UO_2^{+2} + H_2O_2 \longrightarrow UO_2O_{2(s)} + 2H^+$

Neutralization: $UO_2O_{2(s)} + H^+ + NaOH \longrightarrow UO_2O_{2(s)} + Na^+ + H_2O$

At the completion of the precipitation stage, yellowcake slurry is filtered and the filtrate is returned to the eluant tanks for re-fortification and re-use. To reduce contaminant buildup, a portion of the filtrate stream is sent to the waste storage tanks for disposal.

Yellowcake solids are washed with purified water, R.O. permeate, for example, to remove residual contaminants such as chlorides. The rinse water from this process is sent to the elution make-up tank for reuse or to the waste storage tanks for disposal. Yellowcake slurry is then removed from the filter and held in one of two 45,000-pound capacity storage tanks until it is transferred to the dryer.

The operation will include a state-of-the-art rotary vacuum dryer. Modern rotary vacuum dryers are recognized by the U.S. Nuclear Regulatory Commission (NRC) as having near-zero particulate emissions. The dryer will be batch fed and each batch will consist of up to 100 ft^3 of 50% to 60% solids) solids yellowcake slurry. A slurry batch will contain up to 7,500 pounds of yellowcake solids or about 6,150 pounds of dry U_3O_8.

At the completion of drying, the product will be loaded into U.S. Department of Transportation (USDOT) approved 55 gallon steel shipping containers. Packaging equipment will be located beneath the dryer to facilitate direct loading from the dryer into the shipping containers. This packaging system is designed to operate with a minimal amount of particulates. After the containers are filled, they will be allowed to cool for a period of time before being tightly sealed. The containers will be temporarily stored in the product storage area prior to shipping. A batch can be dried daily if needed.

9.4 Spill Control

The reinforced concrete process pad (17,100 Ft^2) and dryer building pad (3600 Ft^2) are designed with twelve -inch high curbs, sumps and storage tanks to prevent runoff.

The twelve-inch curbing generates 132,559 gallons of retention capacity on the process pad, once the cross sectional area or footprint for the process equipment on the pad (2979 Ft^2) is removed. In addition, the holding capacity of the sump system is 1044 gallons, for a total of 133,602 gallons of retention capacity. An adjoining but isolated section of pad will contain the yellowcake slurry processing and storage equipment, as well as, by-product materials. This pad is also designed to prevent runoff. It too will have a twelve-inch high curb around it. At one end, an entrance ramp slopes upward to the height of the curbing. The pad will slope downward from the entrance ramp toward a sump system. This design will allow wash water or spills to collect in the sump system and be pumped to the waste storage tanks. This sump system will be designed to have a holding capacity of approximately 925 gallons. The total surface area of the pad is 6000 ft^2. Including the sump, the pad will have a total holding capacity of 42,523 gallons once the cross sectional area or footprint of the process equipment on the pad (169 Ft^2) and the ramp (210 Ft^2) are subtracted.

Acid and hydrogen peroxide will be stored on a separate 55 ft by 20 ft storage pad that is also designed with twelve inch high curbs and a sump. The twelve-inch curbing generates 7640 gallons of retention capacity, once the cross sectional area for the acid tank (78.5 ft^2) is removed. The cross sectional area for the hydrogen peroxide tank is in significant in that the tank is elevated above the pad on steel supports. A sump adds 202 gallons to the pad's holding capacity, providing a total holding capacity of 7843 gallons.

Four 46,038-gallon, above ground tanks (WDW Storage Tanks) are provided for the storage of waste fluids before disposal. The total storage capacity of the WDW Storage Tank system is 184,152 gallons. Each tank has a specified inside diameter of 14 ft and a side wall height of 40 ft. All four tanks will include a flat bottom, dome top, and will be constructed of Fiberglass Reinforced Plastic (FRP). The FRP tanks will be designed and manufactured utilizing advanced, automatic chopped hoop filament winding and end bell machines to meet or exceed ASTM D3299, ASTM D4097, and SPI's Quality Assurance Report, as applicable. Standard Quality Assurance in-process tests will be conducted during the tank manufacturing process and recorded.

The fabricators of the tank will also hydro-test each tank at the end of the manufacturing process. Should any leaks be discovered, the affected areas will be repaired and the tank will be re-tested. Additionally, each tank will be hydro-tested by UEC following installation at the project site. Again, should any leaks be discovered, the tanks will be repaired and re-tested prior to use.

9.5 Rain and Emergency Operations

During a rain event or emergency condition, fluids impacting the pads are directed to the sump systems by the positive (gravity flow) draining, downward sloping floor. From the sumps, the collected liquids are pumped to the WDW Storage Tanks. From the WDW Storage Tanks, all waste fluids are routed to the WDW(s).

During a 25-Year rain event, approximately 8.5 inches of rain falls within a 24- hour period or about 128,760 gallons would fall onto the main Process, Drying, By-Product and Yellow Cake Storage Pads. The separate chemical pad would receive 5830 gallons during this same event. In total, 147,300 gallons of rain are collected on the process and chemical pads while 184,152 gallons of storage are provided. The four waste storage tanks provide enough capacity to contain a 25 year rain event while maintaining 36,852 gallons of "spare" capacity. The combined slab and sump storage capacity of 183,970 gallons adds additional reserve capacity.

9.6 Typical By-product Wastewater Composition.

Byproduct waste fluids produced by in situ recovery operations in South Texas will vary from one operation to another, depending on differences in the mining formation and slight differences in processing techniques. For the most part, however, the values shown in Table 9.1 provide a typical concentration of the waste solution.

The fabricators of the tank will also hydro-test each tank at the end of the manufacturing process. Should any leaks be discovered, the affected areas will be repaired and the tank will be re-tested. Additionally, each tank will be hydro-tested by UEC following installation at the project site. Again, should any leaks be discovered, the tanks will be repaired and re-tested prior to use.

9.5 Rain and Emergency Operations

During a rain event or emergency condition, fluids impacting the pads are directed to the sump systems by the positive (gravity flow) draining, downward sloping floor. From the sumps, the collected liquids are pumped to the WDW Storage Tanks. From the WDW Storage Tanks, all waste fluids are routed to the WDW(s).

During a 25-Year rain event, approximately 8.5 inches of rain would fall within a 24- hour period. During this event, approximately 141,470 gallons would fall onto the main Process, Drying, By-Product and Yellow Cake Storage Pads. The separate chemical pad would receive 5830 gallons during this same event. In total, 147,300 gallons of rain would collect on the process and chemical pads while 184,152 gallons of storage are provided. The four waste storage tanks provide enough capacity to contain a 25 year rain event while maintaining 36,852 gallons of "spare" capacity. The combined slab and sump storage capacity of 183,970 gallons adds additional reserve capacity.

9.6 Typical By-product Wastewater Composition.

Byproduct waste fluids produced by in situ recovery operations in South Texas will vary from one operation to another, depending on differences in the mining formation and slight differences in processing techniques. For the most part, however, the values shown in Table 9.1 provide a typical concentration of the waste solution.

Table 9.1 Typical Byproduct Wastewater Composition

Parameter	Concentration*	Parameter	Concentration*
Ca	550	Alk	565
Mg	140	pH (S.U.)	7-8
Na	1275	As	0.015
K	35	Cd	<0.0001
CO_3	0	Fe	2.5
HCO_3	565	Pb	<0.001
SO_4	1650	Mn	<1.0
Cl	2385	Hg	<0.0001
NO_3-N	0.1	Mo	15
F	<1.0	Se	0.01
SiO_2	40	U	15
TDS	9400	Ra-226 (pCi/l)	200
EC (µmhos)	12,800		

*Estimated composition is based on typical average values reported at other in-situ process sites.

9.0 Wellfield and Process Facility Details

9.1 Wellfield and Operations Description

A wellfield typically consists of a series of injection and production wells measuring up to 6 inches in diameter that are connected to the process facility via larger diameter trunk lines. Trunk lines typically measure 8 to 10 inches in diameter. Well casing for injection and production wells is made of PVC whereas trunk lines can be either PVC or high density polyethylene (HDPE). Apart from injectors and producers, production zone and non-production zone monitor wells also are part of the wellfield. As with the production and injection wells, monitor well casing is made of PVC. The previously referenced Project Map (see Figure 1.3 in the Appendix) shows the initial wellfield layout, process facility location, preliminary disposal well location, initial aquifer exemption boundary, permit boundary, initial production area acreages, drainages, faults, roads, and other features.

Trunk lines are used to transport pregnant lixiviant from the wellfields to the process plant and to return re-fortified barren lixiviant to the wellfield injectors. Pregnant lixiviant is simply uranium-bearing solution that has been created by mobilizing the uranium in the ore zone with an oxygen-rich, pH-controlled, bicarbonate solution. As the uranium is mobilized in the ore zone, it is transported to the surface via production wells and piped to the recovery plant for stripping and further processing. After the uranium is removed, the fluid stream is re-fortified with chemicals and returned to the wellfield to repeat the process of mobilizing and recovering uranium. Because it does not contain uranium, the fluid stream returning to the wellfields is called barren lixiviant.

Barren lixiviant consists of native groundwater supplemented with bicarbonate ions and oxygen. Before being pumped to the wellfield injectors, the fluid passes through micro filters to remove solids.

The solution is pH controlled, normally in the range of 6.8 to 7.4 with gaseous CO_2, and the bicarbonate concentration is kept in the range of 400 to 1000 PPM with a buffering agent such as NaOH. As barren lixiviant is circulated through the wellfield, its oxygen content is consumed and therefore its oxidation potential must be enhanced through the addition of oxygen, or hydrogen peroxide in the range of 200 to 400 PPM as O_2. As lixiviant is recycled, total ion concentration increases over time. Since high ion concentrations are not conducive to efficient mining, they can be lowered using reverse osmosis (R.O.). Minimizing the concentrations of SO_4, Ca, Fe, Mo, Ra-226, SiO_4, and other elements is desirable. The use of R.O. in the mining process not only boosts recovery efficiency, it maintains a cleaner wellfield. By minimizing the elevation of these and other constituents, restoration will also be made easier. Another good feature of R.O. is that it conserves water.

The lixiviant just described is designed to efficiently mobilize the uranium ore which is normally found in reduced sand. To recover the uranium from this environment, the ore must first be converted to a soluble form ($UO2^{+2}$) this is accomplished through oxidation. Following this phase, the uranyl cations complex with bicarbonate anions, forming a uranyl dicarbonate complex. The chemical equation below outlines the process of dissolving and complexing the uranium in-situ:

Oxidation: $2UO_{2(S)} + O_2 + 2H_2O \longrightarrow 2UO_2{}^{+2}{}_{0)} + 4OH^-$

$2H_2O_2 \longrightarrow 2H_2O + O_2$

Complexing: $UO_2{}^{+2} + 2HCO_3 + 2OH^- \longrightarrow UO_2\,(CO_3)_2{}^{-2} + 2H_2O$

Both pregnant and barren lixiviant streams are monitored for total flow volume in and out of the wellfield.

For process control purposes, pregnant lixiviant from each production wellfield is metered and totaled. In addition, records on daily flow rates of individual production wells are maintained.

9.2 Process Facility Description

Figure 9.1 shows the layout of the process plant equipment, dryer building, chemical storage area, yellowcake product storage and passageways. The plant is a down flow design that will have a maximum lixiviant flow rate of 5,000 gpm. At start up, however, Uranium Energy Corp expects to be operating at a flow rate of 1,000 to 1,500 gpm. Later, as additional wellfield production areas are brought into service, the maximum design flow rate of 5,000 gpm will be reached.

Pregnant lixiviant will be received from the wellfields through large-diameter trunk line. This line branches into two lines that feed the down flow sand filters. The filters are 6 feet in height (straight side) and 11 feet in diameter. The down flow sand filters remove suspended particles with a particle diameter of 2 microns or greater from the lixiviant. Normally, three of the filters will be in operation simultaneously while the forth is being back-washed. Although they are referred to as sand filters, their content may consist of fine garnet, pea gravel and larger gravel. It was noted above that the sand filters are back-washed. Back washing is necessary to maintain the effectiveness of the sand filters. Effluent from this cleaning process will be contained in the backwash tanks. The Backwash Tanks are cone bottomed. Backwash fluids enter through the side, just above the cone bottom. Sand and silt collect in the bottom cone and are removed when a layer begins to accumulate. Clear water exits the top of the tank after flowing upward through layers of settled and fine suspended solids.

9.0 Wellfield and Process Facility Details

9.1 Wellfield and Operations Description

A wellfield typically consists of a series of injection and production wells measuring up to 6 inches in diameter that are connected to the process facility via larger diameter trunk lines. Trunk lines typically measure 8 to 10 inches in diameter. Well casing for injection and production wells is made of PVC whereas trunk lines can be either PVC or high density polyethylene (HDPE). Apart from injectors and producers, production zone and non-production zone monitor wells also are part of the wellfield. As with the production and injection wells, monitor well casing is made of PVC. The previously-referenced General Mine Plan Layout Map (see Figure 8.1 in the Appendix) shows the wellfield layout, trunk lines, process facility and other important mine site features.

Trunk lines are used to transport pregnant lixiviant from the wellfields to the process plant and to return re-fortified barren lixiviant to the wellfield injectors. Pregnant lixiviant is simply uranium-bearing solution that has been created by mobilizing the uranium in the ore zone with an oxygen-rich, pH-controlled, bicarbonate solution. As the uranium is mobilized in the ore zone, it is transported to the surface via production wells and piped to the recovery plant for stripping and further processing. After the uranium is removed, the fluid stream is re-fortified with chemicals and returned to the wellfield to repeat the process of mobilizing and recovering uranium. Because it does not contain uranium, the fluid stream returning to the wellfields is called barren lixiviant.

Barren lixiviant consists of native groundwater supplemented with bicarbonate ions and oxygen. Before being pumped to the wellfield injectors, the fluid passes through micro filters to remove solids.

9.7.2 Mechanical Integrity Testing

As noted above, all Class III wells will be tested for mechanical integrity prior to being placed into service. The procedures that will be followed are given in 30 TAC §331.43. Testing involves pressuring a well up to 100 psi and allowing it to stand for 30 minutes before taking another pressure reading. If the pressure remains within 10% of the initial 100 psi, the well passes the test. Single point resistivity logging is also used in performing MIT. In addition, completion reports (cementing records, well diagrams, casing records) and logging are used to evaluate the integrity of a well.

9.7.3 Excursion Prevention and Corrective Action

Protection of underground sources of drinking water is the single most important goal of UEC's proposed operation. To this end, UEC will employ a number of time-proven mechanisms to ensure this valuable resource is fully protected. Following is a summary of how in situ uranium recovery operations operate without impacting good quality groundwater.

To prevent mining fluids from migrating vertically and horizontally from the production zones, UEC will maintain a negative sink in the production areas to force native groundwater to flow inward toward the areas being produced. This negative pressure gradient system will remain in place throughout operations and until the affected production zones have been fully restored to pre-mining uses. The cone of depression just noted is created by removing more water from the production zone than is being injected. The terms used to describe this safety mechanism are: overproduction and production bleed. To ensure that the effectiveness of this protective measure does not become degraded, bleed will be carefully monitored using in-line totalizers. In addition to this, other important operational procedures will be in place to ensure that fluids from the production zones remain confined. For example, water levels in the monitor wells will be measured on a routine basis. A third element in the excursion detection/prevention plan involves routine water quality monitoring. TCEQ requires routine analysis of water from the production and non-production monitor wells.

Designated monitors wells will be monitored every two weeks for what is known as Control Parameters. Control parameters are simply water quality constituents that would provide the earliest indication of a possible excursion. Because of its rapid movement, chloride provides the earliest warning. Other candidates include electrical conductivity (EC), TDS and sulfate. Sulfate, however, is not as reliable as chloride in that native sulfate levels can cause what is known as false positives. In other words, an increase in sulfate might be proof of an excursion. In the past, uranium was used as one of the control parameters but it is well understood that it is a poor choice in that it does not readily move through groundwater. Since it does not readily move, it cannot serve as an early warning sign. Recognizing this, the U.S. Nuclear Regulatory Commission (NRC) does not allow uranium to be used as a control parameter, and recently TCEQ has adopted this same view.

If a control parameter equals or exceeds the upper control limit set by TCEQ, a verifying analysis must be completed within two days. If the verifying analysis indicates that mining solutions are present in a designated monitor well, an operator shall initiate corrective measures as set out in 30 TAC §331.106 Remedial Action for Excursion. This provision of the rules has three major requirements: 1) notice the TCEQ Regional Office by telephone within 48 hours and file a written letter with the Executive Director, postmarked within 48 hours of the event; 2) prepare a comprehensive groundwater analysis report; and 3) clean up all designated monitor wells, all zones outside the production zone and the production zone outside the mine area.

A fourth safeguard for ensuring maximum groundwater protection is the well design itself. In the previous section of this report, well construction and completion was presented for the Class III wells used in uranium recovery operations. Class III wells are not only built to higher standards than a typical domestic water well, they are tested for mechanical integrity. Mechanical integrity testing is a fifth protective measure. It should also be noted that if equipment is used to enter well for maintenance or other reasons after an MIT was completed, the well must be re-tested for integrity. A sixth protective measure is the requirement to monitor specified wells within a ¼ mile of the injection site at least every three months.

Figure 9.4 shows a generalized pattern of monitor wells. Designated monitors wells will be monitored every two weeks for what is known as Control Parameters. Control parameters are simply water quality constituents that would provide the earliest indication of a possible excursion. Because of its rapid movement, chloride provides the earliest warning. Other candidates include electrical conductivity (EC), TDS and sulfate. Sulfate, however, is not as reliable as chloride in that native sulfate levels can cause what is known as false positives. In other words, an increase in sulfate might be proof of an excursion. In the past, uranium was used as one of the control parameters but it is well understood that it is a poor choice in that it does not readily move through groundwater. Since it does not readily move, it cannot serve as an early warning sign. Recognizing this, the U.S. Nuclear Regulatory Commission (NRC) does not allow uranium to be used as a control parameter, and recently TCEQ has adopted this same view.

If a control parameter equals or exceeds the upper control limit set by TCEQ, a verifying analysis must be completed within two days. If the verifying analysis indicates that mining solutions are present in a designated monitor well, an operator shall initiate corrective measures as set out in 30 TAC §331.106 Remedial Action for Excursion. This provision of the rules has three major requirements: 1) notice the TCEQ Regional Office by telephone within 48 hours and file a written letter with the Executive Director, postmarked within 48 hours of the event; 2) prepare a comprehensive groundwater analysis report; and 3) clean up all designated monitor wells, all zones outside the production zone and the production zone outside the mine area.

A fourth safeguard for ensuring maximum groundwater protection is the well design itself. In the previous section of this report, well construction and completion was presented for the Class III wells used in uranium recovery operations. Class III wells are not only built to higher standards than a typical domestic water well, they are tested for mechanical integrity. Mechanical integrity testing is a fifth protective measure. It should also be noted that if equipment is used to enter well for maintenance or other reasons after an MIT was completed, the well must be re-tested for integrity.

Figure 9.4 Sample Proposed Production Area Map

Figure 9.4 SAMPLE PROPOSED PRODUCTION AREA MAP

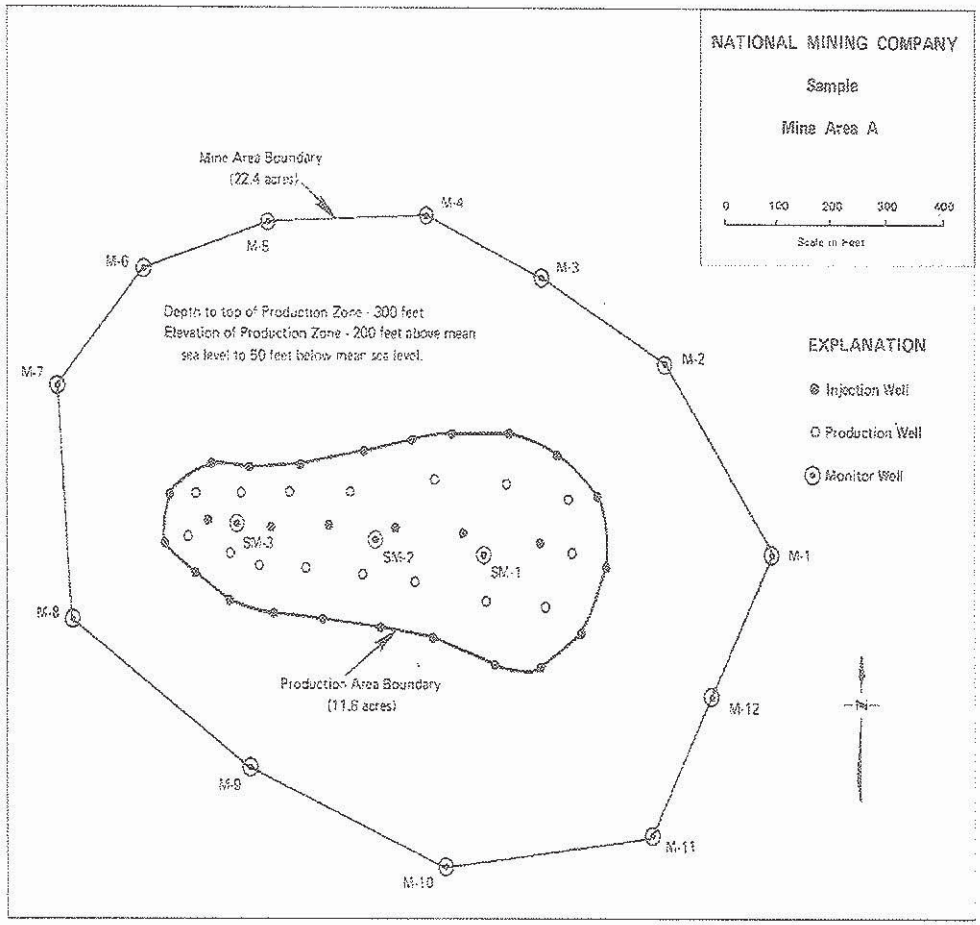

A fifth protective measure includes the requirement to monitor specified wells within a ¼ mile of the injection site at least every three months.

A sixth protective measure includes continuous monitoring of injection pressure. Pressure gauges are placed on all injection wells and manifolds, and the maximum injection pressure is conspicuously marked on the gauges. Routine inspection and reporting by UEC personnel and TCEQ inspectors will ensure a high degree of safety.

A seventh measure of protection involves corrective action that would be taken in the unlikely event of well failure. Because of the high construction standards to which Class III wells are built and because of mechanical integrity testing prior to use, well failure is uncommon. However, in the event of a failure, the well would be removed from service and investigated to discover the reason for failure and to locate the failure point in the casing. Potential leakage into overlying, non-exempt aquifers would be detected by monitor wells. If monitoring results verify an excursion, corrective action will be taken in accordance with § 331.106 Remedial Action for Excursion.

Following documentation of the event and verification by TCEQ, the well would be plugged and abandoned in accordance with an approved plugging plan filed with TCEQ. If needed, a new well would be completed in the production pattern. Completion of a new well would follow the criteria for Class III wells.

9.7 Well Completion, Construction and Mechanical Integrity

9.7.1 Construction and Completion

Well construction and completion will conform to Class III well standards described in §331.82 Construction Requirements. Figure 9.3 is a schematic showing a typical injection and recovery well that UEC would use in the wellfields. As the diagram shows, wells vary in diameter from 4 inches to 6 inches. The casing is schedule 40 PVC. After drilling the hole, it is logged using electric and gamma logging tools to determine subsurface geology. The hole is then reamed out to a larger diameter (often 7 7/8 inches) through the target sand to receive the PVC casing. Casing is then run into the hole to total depth. Casing joints are primed, glued and secured with sheet metal screws. Centralizers are placed at 100-foot intervals. Once the casing is in place, it is cemented through weep holes located near the bottom-most casing. All wells are cemented from total depth to the surface with Type I Portland cement. The cement is then allowed to dry for several days before proceeding to mechanical integrity testing (MIT). Once a well passes MIT, additional development follows.

Target sands are selectively drilled out to a larger diameter than the casing. This is known as undereaming. An underreamed interval is typically between 10 and 11 inches in diameter. A screened liner is then placed into the zone that has been underreamed (see Figure 9.3). The next stage involves placing a filter pack or sand pack between the well screen and the formation. This is done to keep an unconsolidated formation from caving in around the screen. Sand packing also improves the performance of a well. Finally, the well is logged through the screen to verify proper placement in the ore zone. Monitor wells are built in the same manner as the injectors and producers but the main difference is that monitor wells normally do not have permanent pumps installed.

9.7 Well Completion, Construction and Mechanical Integrity

9.7.1 Construction and Completion

Well construction and completion will conform to Class III well standards described in §331.82 Construction Requirements. Figure 9.3 is a schematic showing a typical injection and recovery well that UEC would use in the wellfields. As the diagram shows, wells vary in diameter from 4 inches to 6 inches. The casing is schedule 40 PVC. After drilling the hole, it is logged using electric and gamma logging tools to determine subsurface geology. The hole is then reamed out to a larger diameter (often 7 7/8 inches) through the target sand to receive the PVC casing. Casing is then run into the hole to total depth. Casing joints are primed, glued and secured with sheet metal screws. Centralizers are placed at 100-foot intervals. Once the casing is in place, it is cemented through weep holes located near the bottom-most casing. All wells are cemented from total depth to the surface with Type I Portland cement. The cement is then allowed to dry for several days before proceeding to mechanical integrity testing (MIT). Once a well passes MIT, additional development follows.

Target sands are selectively drilled out to a larger diameter than the casing. This is known as undereaming. An underreamed interval is typically between 10 and 11 inches in diameter. A screened liner is then placed into the zone that has been underreamed (see Figure 9.3). The next stage involves placing a filter pack or sand pack between the well screen and the formation. This is done to keep an unconsolidated formation from caving in around the screen. Sand packing also improves the performance of a well. Well stimulation (see § 331.122(2)(H) is not needed for production and recovery wells. Stimulation is a procedure typically used in disposal wells. Finally, the well is logged through the screen to verify proper placement in the ore zone. Monitor wells are built in the same manner as the injectors and producers but the main difference is that monitor wells normally do not have permanent pumps installed.

Given this approach, it is assumed that restoration targets can be met with 6 pore volumes. The pore volumes being a blend of native groundwater and purified water from the R.O. units.

8.3 Well Plugging

An estimated total number of wells and a plugging cost are given in Section 13.0. Restoration: Well Plugging and Abandonment. With respect to plugging, UEC will follow the rules given in 30 TAC §331.86 Closure. Briefly, UEC will complete well plugging within 120 days after receiving official acknowledgment from TCEQ that restoration is complete. Plugging will be in accordance with a TCEQ-approved plugging plan.

Plugging of Class III wells is accomplished by removing all equipment from the well and cementing it from total depth to the surface. After the cement has been allowed to dry, the casing is cut off to a level approximately 3 feet below surface grade. The hole is then backfilled with native soil and graded to approximate the natural contour of the land. Following this stage, TCEQ is notified and will conduct a verification inspection.

[redacted]

Given this approach, it is assumed that restoration targets can be met with 6 pore volumes; the pore volumes being a blend of native groundwater and purified water from the R.O. units. A blend of R.O. purified water (permeate) with native groundwater will be circulated throughout the mine zone to remove constituents that are temporarily elevated during the uranium recovery phase. This process will continue until water quality in the ore zone is restored to levels consistent with pre-mining uses for this portion of the aquifer. During the restoration period, water quality improvement is extensively sampled on a routine basis, and progress is documented in semi-annual restoration progress reports that are filed with TCEQ. Reverse osmosis reject (approximately 30% of the water that passes through the units) will be disposed in a Class I Non-hazardous Waste Disposal Well(s).

8.3 Well Plugging

An estimated total number of wells and a plugging cost are given in Section 13.0. Restoration: Well Plugging and Abandonment. With respect to plugging, UEC will follow the rules given in 30 TAC §331.86 Closure. Briefly, UEC will complete well plugging within 120 days after receiving official acknowledgment from TCEQ that restoration is complete. Plugging will be in accordance with a TCEQ-approved plugging plan.

Plugging of Class III wells is accomplished by removing all equipment from the well and cementing it from total depth to the surface. After the cement has been allowed to dry, the casing is cut off to a level approximately 3 feet below surface grade. The hole is then backfilled with native soil and graded to approximate the natural contour of the land. Following this stage, TCEQ is notified and will conduct a verification inspection.

8.1 Construction

The construction of the process plant and initial production area will proceed simultaneously. Immediately following the issuance of the required authorizations the construction phase will begin. Based on past experience, the construction phase will take approximately 9 months.

8.2 Operations and Restoration

The estimated life of the project is 9 years, including restoration of the production areas. Table 8.1 Mine Plan summarizes the production, restoration, stability and administrative periods of the project. These periods are given for all four production areas. The stability period will last for at least 180 days to demonstrate to the satisfaction of TCEQ that the restored water quality is stable and will not rebound to values exceeding the restoration table limits. The administrative period is the time associated with data submittals by UEC, agency reviews and agency approvals.

Previously referenced Figure 1.3 Project Map shows the location and acreage of the four production areas. It was noted in earlier chapters of this application that the production zones represent four distinct sand units; namely Sand A, Sand B, Sand C and Sand D. For mining purposes, the individual production areas are subdivided into smaller units called modules.

As shown in Table 8.1, UEC will be conducting restoration at the same time that recovery operations are occurring. Restoration activities will begin as soon as hydraulic separation can be established between modules that have been depleted of uranium and those that are being produced. Based on many years of experience, UEC believes that restoration goals can be more quickly achieved by beginning restoration as soon as possible. UEC also believes that the use of R.O. in the mining process will accelerate the restoration process.

8.0 Mine Plan

8.1 Construction

The construction of the process plant and initial production area will proceed simultaneously. Immediately following the issuance of the required authorizations the construction phase will begin. Based on past experience, the construction phase will take approximately 9 months.

8.2 Operations and Restoration

The estimated life of the project is 9 years, including restoration of the production areas. Table 8.1 Mine Plan summarizes the production, restoration, stability and administrative periods of the project. These periods are given for all four production areas. The stability period will last for at least 180 days to demonstrate to the satisfaction of TCEQ that the restored water quality is stable and will not rebound to values exceeding the restoration table limits. The administrative period is the time associated with data submittals by UEC to report restoration progress (semi-annual restoration reports) and stability data as required in § 331.107), agency reviews and agency approvals.

Previously referenced Figure 1.3 Project Map shows the location and acreage of the four production areas. It was noted in earlier chapters of this application that the production zones represent four distinct sand units; namely Sand A, Sand B, Sand C and Sand D. For mining purposes, the individual production areas are subdivided into smaller units called modules.

As shown in Table 8.1, UEC will be conducting restoration at the same time that recovery operations are occurring. Restoration activities will begin as soon as hydraulic separation can be established between modules that have been depleted of uranium and those that are being produced. Based on many years of experience, UEC believes that restoration goals can be more quickly achieved by beginning restoration as soon as possible. UEC also believes that the use of R.O. in the mining process will accelerate the restoration process.

Appendix D

Cross-section Logs

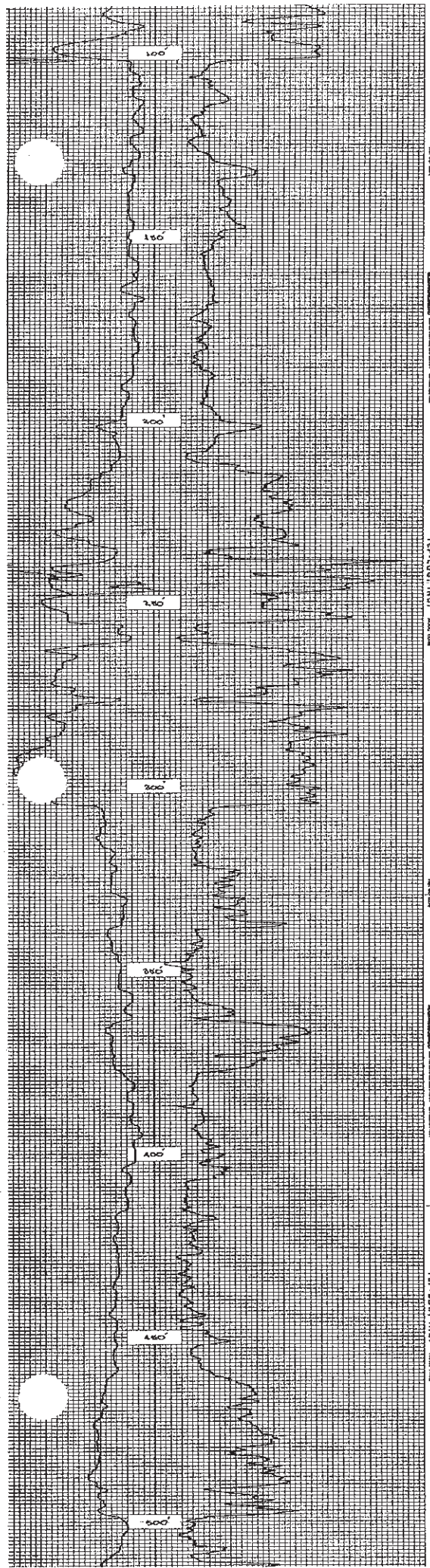

0 Ft.	0 Ft.	SEC. ____ TWP. ____ RGE. ____	OPERATOR
TOTAL 608	TOTAL 609		

RERUNS		DENSITY		DEPTH	RESISTANCE		
SCALE Cps/In.		SCALE Cps/In.		SCALE 1" = 10 Ft.	SCALE 10 Ohms/In.		HOLE DAT
T. C. Sec.	Logging Speed Ft./Min.	T. C. Sec.	Logging Speed Ft./Min.			30 Ft./Min.	DEPTH - D / DEPTH - L
FROM Ft.		FROM Ft.		FROM 609	FROM 609 Ft.		BIT SIZE
TO Ft.		TO Ft.		TO G.L.	TO 0 Ft.		FLUID IN H
TOTAL		TOTAL			TOTAL 609		FLUID LEVE
SCALE Cps/In.		SCALE Cps/In.		SCALE 1" = ____ Ft.	SCALE Ohms/In.		CASING
T. C. Sec.	Logging Speed Ft./Min.	T. C. Sec.	Logging Speed Ft./Min.			Logging Speed Ft./Min.	LOG MEAS
FROM Ft.		FROM Ft.		FROM	FROM Ft.		DRILLING
TO Ft.		TO Ft.		TO	TO Ft.		PERMANEN
TOTAL		TOTAL			TOTAL		

REMARKS DRILLER-MARK

UEC's Baseline Wells

Client: Uranium Energy Corp
Project: Weesatche Baseline Sampling
Lab ID: C07080504-001
Client Sample ID: RBLA-1

Report Date: 08/27/07
Collection Date: 08/07/07 07:38
DateReceived: 08/08/07
Matrix: Aqueous

Analyses	Result	Units	Qualifiers	RL	MCL/ QCL	Method	Analysis Date / By
MAJOR IONS							
Alkalinity, Total as CaCO3	269	mg/L		1		A2320 B	08/09/07 17:52 / bas
Carbonate as CO3	ND	mg/L		1		A2320 B	08/09/07 17:52 / bas
Bicarbonate as HCO3	328	mg/L		1		A2320 B	08/09/07 17:52 / bas
Calcium	96.9	mg/L		0.5		E200.7	08/20/07 18:05 / ts
Chloride	44	mg/L		1		A4500-Cl B	08/13/07 14:00 / jl
Fluoride	0.5	mg/L		0.1		A4500-F C	08/14/07 10:34 / bas
Magnesium	10	mg/L		0.5		E200.7	08/20/07 18:05 / ts
Nitrogen, Ammonia as N	ND	mg/L		0.05		A4500-NH3 G	08/10/07 12:35 / ljl
Nitrogen, Nitrate+Nitrite as N	ND	mg/L		0.1		E353.2	08/13/07 16:09 / ljl
Potassium	3.3	mg/L		0.5		E200.7	08/20/07 18:05 / ts
Silica	34.9	mg/L		0.1		E200.7	08/20/07 18:05 / ts
Sodium	36.1	mg/L		0.5		E200.7	08/20/07 18:05 / ts
Sulfate	43	mg/L		1		A4500-SO4 E	08/10/07 10:41 / zd
PHYSICAL PROPERTIES							
Conductivity	686	umhos/cm		1.0		A2510 B	08/09/07 13:22 / ml
pH	7.39	s.u.		0.01		A4500-H B	08/09/07 13:22 / ml
Solids, Total Dissolved TDS @ 180 C	400	mg/L		10		A2540 C	08/09/07 15:53 / ml
METALS - DISSOLVED							
Arsenic	0.003	mg/L		0.001		E200.8	08/24/07 00:00 / bws
Cadmium	ND	mg/L		0.01		E200.8	08/24/07 00:00 / bws
Iron	ND	mg/L		0.03		E200.7	08/20/07 18:05 / ts
Lead	ND	mg/L		0.05		E200.8	08/24/07 00:00 / bws
Manganese	0.01	mg/L		0.01		E200.8	08/24/07 00:00 / bws
Mercury	ND	mg/L		0.001		E200.8	08/24/07 00:00 / bws
Molybdenum	ND	mg/L		0.1		E200.8	08/24/07 00:00 / bws
Selenium	ND	mg/L		0.001		E200.8	08/24/07 00:00 / bws
Uranium	0.0176	mg/L		0.0003		E200.8	08/24/07 00:00 / bws
RADIONUCLIDES - DISSOLVED							
Radium 226	735	pCi/L		0.2		E903.0	08/20/07 15:56 / crw
Radium 226 precision (±)	8.5	pCi/L				E903.0	08/20/07 15:56 / crw
DATA QUALITY							
A/C Balance (± 5)	-1.44	%				Calculation	08/24/07 11:54 / bws
Anions	7.53	meq/L				Calculation	08/24/07 11:54 / bws
Cations	7.31	meq/L				Calculation	08/24/07 11:54 / bws
Solids, Total Dissolved Calculated	430	mg/L				Calculation	08/24/07 11:54 / bws
TDS Balance (0.80 - 1.20)	0.930	dec. %				Calculation	08/24/07 11:54 / bws

Report Definitions:
RL - Analyte reporting limit.
QCL - Quality control limit.
MCL - Maximum contaminant level.
ND - Not detected at the reporting limit.

9-28-07

Client: Uranium Energy Corp
Project: Weesatche Baseline Sampling
Lab ID: C07070492-001
Client Sample ID: RBLA-2

Report Date: 08/01/07
Collection Date: 07/10/07 12:42
DateReceived: 07/11/07
Matrix: Aqueous

Analyses	Result	Units	Qualifiers	RL	MCL/ QCL	Method	Analysis Date / By
MAJOR IONS							
Alkalinity, Total as CaCO3	236	mg/L		1		A2320 B	07/16/07 13:55 / ljl
Carbonate as CO3	ND	mg/L		1		A2320 B	07/16/07 13:55 / ljl
Bicarbonate as HCO3	288	mg/L		1		A2320 B	07/16/07 13:55 / ljl
Calcium	90.8	mg/L		0.5		E200.7	07/27/07 21:52 / cp
Chloride	116	mg/L		1		A4500-Cl B	07/13/07 15:40 / jl
Fluoride	0.7	mg/L		0.1		A4500-F C	07/13/07 13:39 / bas
Magnesium	6.0	mg/L		0.5		E200.7	07/27/07 21:52 / cp
Nitrogen, Ammonia as N	0.06	mg/L		0.05		A4500-NH3 G	07/17/07 14:28 / ljl
Nitrogen, Nitrate+Nitrite as N	ND	mg/L		0.1		E353.2	07/12/07 14:05 / jal
Potassium	11.0	mg/L		0.5		E200.7	07/27/07 21:52 / cp
Silica	54.1	mg/L		0.1		E200.7	07/27/07 21:52 / cp
Sodium	68.5	mg/L	D	0.8		E200.7	07/27/07 21:52 / cp
Sulfate	38	mg/L		1		A4500-SO4 E	07/12/07 15:54 / zd
PHYSICAL PROPERTIES							
Conductivity	886	umhos/cm		1.0		A2510 B	07/12/07 13:35 / ml
pH	7.43	s.u.		0.01		A4500-H B	07/12/07 13:35 / ml
Solids, Total Dissolved TDS @ 180 C	550	mg/L		10		A2540 C	07/12/07 15:50 / ml
METALS - DISSOLVED							
Arsenic	0.034	mg/L		0.001		E200.8	07/23/07 22:52 / bws
Cadmium	ND	mg/L		0.01		E200.8	07/23/07 22:52 / bws
Iron	ND	mg/L		0.03		E200.7	07/27/07 21:52 / cp
Lead	ND	mg/L		0.05		E200.8	07/23/07 22:52 / bws
Manganese	0.01	mg/L		0.01		E200.8	07/23/07 22:52 / bws
Mercury	ND	mg/L		0.001		E200.8	07/23/07 22:52 / bws
Molybdenum	0.4	mg/L		0.1		E200.8	07/23/07 22:52 / bws
Selenium	0.004	mg/L		0.001		E200.8	07/23/07 22:52 / bws
Uranium	0.286	mg/L		0.0003		E200.8	07/23/07 22:52 / bws
RADIONUCLIDES - DISSOLVED							
Radium 226	989	pCi/L		0.2		E903.0	07/24/07 14:48 / trs
Radium 226 precision (±)	10.3	pCi/L				E903.0	07/24/07 14:48 / trs
DATA QUALITY							
A/C Balance (± 5)	-3.07	%				Calculation	07/30/07 12:53 / bws
Anions	8.81	meq/L				Calculation	07/30/07 12:53 / bws
Cations	8.29	meq/L				Calculation	07/30/07 12:53 / bws
Solids, Total Dissolved Calculated	527	mg/L				Calculation	07/30/07 12:53 / bws
TDS Balance (0.80 - 1.20)	1.04	dec. %				Calculation	07/30/07 12:53 / bws

Report Definitions:
RL - Analyte reporting limit.
QCL - Quality control limit.
D - RL increased due to sample matrix interference.
MCL - Maximum contaminant level.
ND - Not detected at the reporting limit.

GROUND WATER ANALYSIS REPORT-IN SITU MINING-URANIUM

COMPANY: URANIUM ENERGY CORPORATION REPORT DATE: March 20, 2007
IDENTIFICATION: RBLA-3
2-21-07
LABORATORY: JORDAN LABORATORIES, INC.

MAJOR AND SECONDARY CONSTITUENTS

ITEM	MG/L	EPM	CONDUCTANCE	%EPM
CALCIUM(CA)	110	5.49	285.48	64.51
MAGNESIUM(MG)	9.3	0.76	35.42	8.93
SODIUM(NA)	50	2.17	106.11	25.50
POTASSIUM(K)	3.7	0.09	6.48	1.06
TOTAL CATION		8.51		
CARBONATE(CO3)	0	0.00	0.00	0.00
BICARBONATE(HCO3)	249	4.08	177.89	48.98
SULFATE(SO4)	16	0.33	24.39	3.96
CHLORIDE(CL)	139	3.92	297.53	47.06
NITRATE(NO3-N)	<0.01			
FLUORIDE(F)	0.53	TOTAL	933.29	
SILICA(SIO2)	46			
TOTAL ANION		8.33		
TOTAL ION	624			

TDS(180 C)	540
TOT ION-0.5 HCO3=	499
EC(25 C)	851 UMHOS
EC(DIL)= 93.8 X 10.0 =	938 UMHOS
ALK. AS CACO3	204
PH	7.42

ACCURACY CHECK

		RANGE
ION	1.022	(.96 TO 1.04)
TDS	1.082	(.90 TO 1.10)
EC	1.005	(.95 TO 1.05)

RADIATION-PICOCURIES/LITER

GROSS ALPHA		+/-
GROSS BETA		+/-
RADIUM 226	3160	+/- 10

MINOR AND TRACE CONSTITUENTS

ITEM	MG/L	ITEM	MG/L	ITEM	MG/L
ARSENIC(AS)	0.031	MANGANESE(MN)	0.01	VANADIUM(V)	
BARIUM(BA)		MERCURY(HG)	<0.0002	ZINC(ZN)	
CADMIUM(CD)	<0.0001	MOLY.(MO)	0.3	BORON(B)	
CHROM.(CR)		NICKEL(NI)		AMMONIA-N	<0.1
COPPER(CU)		SELENIUM(SE)	<0.001		
IRON(FE)	0.01	SILVER(AG)			
LEAD(PB)	0.001	URANIUM(U)	0.127		

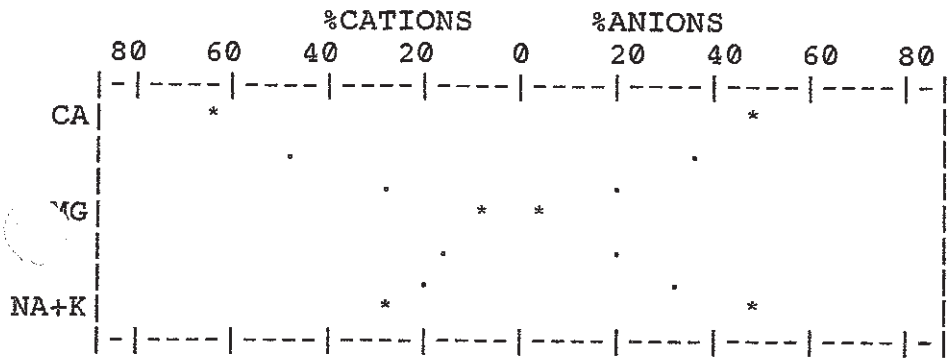

NOTE: QC Documnetation is on File at Jordan Labs in Corpus Christi, TX

CHECKED BY:

LAB.NO:M45-585

Client: Uranium Energy Corp
Project: Weesatche Baseline Sampling
Lab ID: C07080504-002
Client Sample ID: RBLA-4

Report Date: 08/27/07
Collection Date: 08/07/07 08:35
DateReceived: 08/08/07
Matrix: Aqueous

Analyses	Result	Units	Qualifiers	RL	MCL/ QCL	Method	Analysis Date / By
MAJOR IONS							
Alkalinity, Total as CaCO3	323	mg/L		1		A2320 B	08/09/07 21:24 / bas
Carbonate as CO3	ND	mg/L		1		A2320 B	08/09/07 21:24 / bas
Bicarbonate as HCO3	393	mg/L		1		A2320 B	08/09/07 21:24 / bas
Calcium	140	mg/L		0.5		E200.7	08/20/07 18:08 / ts
Chloride	218	mg/L		1		A4500-Cl B	08/13/07 14:02 / jl
Fluoride	0.8	mg/L		0.1		A4500-F C	08/14/07 10:35 / bas
Magnesium	10	mg/L		0.5		E200.7	08/20/07 18:08 / ts
Nitrogen, Ammonia as N	0.08	mg/L		0.05		A4500-NH3 G	08/10/07 12:39 / ljl
Nitrogen, Nitrate+Nitrite as N	ND	mg/L		0.1		E353.2	08/13/07 16:12 / ljl
Potassium	5.1	mg/L		0.5		E200.7	08/20/07 18:08 / ts
Silica	41.2	mg/L		0.1		E200.7	08/20/07 18:08 / ts
Sodium	115	mg/L		0.5		E200.7	08/20/07 18:08 / ts
Sulfate	56	mg/L		1		A4500-SO4 E	08/10/07 10:42 / zd
PHYSICAL PROPERTIES							
Conductivity	1350	umhos/cm		1.0		A2510 B	08/09/07 13:23 / ml
pH	7.11	s.u.		0.01		A4500-H B	08/09/07 13:23 / ml
Solids, Total Dissolved TDS @ 180 C	782	mg/L		10		A2540 C	08/09/07 15:51 / ml
METALS - DISSOLVED							
Arsenic	0.045	mg/L		0.001		E200.8	08/24/07 00:07 / bws
Cadmium	ND	mg/L		0.01		E200.8	08/24/07 00:07 / bws
Iron	ND	mg/L		0.03		E200.7	08/20/07 18:08 / ts
Lead	ND	mg/L		0.05		E200.8	08/24/07 00:07 / bws
Manganese	0.01	mg/L		0.01		E200.8	08/24/07 00:07 / bws
Mercury	ND	mg/L		0.001		E200.8	08/24/07 00:07 / bws
Molybdenum	0.4	mg/L		0.1		E200.8	08/24/07 00:07 / bws
Selenium	0.002	mg/L		0.001		E200.8	08/24/07 00:07 / bws
Uranium	0.147	mg/L		0.0003		E200.8	08/24/07 00:07 / bws
RADIONUCLIDES - DISSOLVED							
Radium 226	904	pCi/L		0.2		E903.0	08/20/07 15:56 / crw
Radium 226 precision (±)	9.3	pCi/L				E903.0	08/20/07 15:56 / crw
DATA QUALITY							
A/C Balance (± 5)	-3.10	%				Calculation	08/24/07 11:54 / bws
Anions	13.8	meq/L				Calculation	08/24/07 11:54 / bws
Cations	13.0	meq/L				Calculation	08/24/07 11:54 / bws
Solids, Total Dissolved Calculated	780	mg/L				Calculation	08/24/07 11:54 / bws
TDS Balance (0.80 - 1.20)	1.00	dec. %				Calculation	08/24/07 11:54 / bws

Report Definitions:
RL - Analyte reporting limit.
QCL - Quality control limit.
MCL - Maximum contaminant level.
ND - Not detected at the reporting limit.

9-28-07

LABORATORY ANALYTICAL REPORT

Client: Uranium Energy Corp
Project: Weesatche Baseline Sampling
Lab ID: C07070492-002
Client Sample ID: RBLA-5

Report Date: 08/01/07
Collection Date: 07/10/07 14:23
DateReceived: 07/11/07
Matrix: Aqueous

Analyses	Result	Units	Qualifiers	RL	MCL/ QCL	Method	Analysis Date / By
MAJOR IONS							
Alkalinity, Total as CaCO3	230	mg/L		1		A2320 B	07/16/07 14:02 / ljl
Carbonate as CO3	ND	mg/L		1		A2320 B	07/16/07 14:02 / ljl
Bicarbonate as HCO3	281	mg/L		1		A2320 B	07/16/07 14:02 / ljl
Calcium	82.6	mg/L		0.5		E200.7	07/27/07 21:55 / cp
Chloride	62	mg/L		1		A4500-Cl B	07/13/07 15:46 / jl
Fluoride	0.5	mg/L		0.1		A4500-F C	07/13/07 13:40 / bas
Magnesium	4.8	mg/L		0.5		E200.7	07/27/07 21:55 / cp
Nitrogen, Ammonia as N	ND	mg/L		0.05		A4500-NH3 G	07/17/07 14:30 / ljl
Nitrogen, Nitrate+Nitrite as N	ND	mg/L		0.1		E353.2	07/12/07 14:15 / jal
Potassium	10.5	mg/L		0.5		E200.7	07/27/07 21:55 / cp
Silica	36.3	mg/L		0.1		E200.7	07/27/07 21:55 / cp
Sodium	43.6	mg/L	D	0.8		E200.7	07/27/07 21:55 / cp
Sulfate	29	mg/L		1		A4500-SO4 E	07/12/07 15:56 / zd
PHYSICAL PROPERTIES							
Conductivity	697	umhos/cm		1.0		A2510 B	07/12/07 13:37 / ml
pH	7.48	s.u.		0.01		A4500-H B	07/12/07 13:37 / ml
Solids, Total Dissolved TDS @ 180 C	422	mg/L		10		A2540 C	07/12/07 15:51 / ml
METALS - DISSOLVED							
Arsenic	0.015	mg/L		0.001		E200.8	07/23/07 22:59 / bws
Cadmium	ND	mg/L		0.01		E200.8	07/23/07 22:59 / bws
Iron	ND	mg/L		0.03		E200.7	07/27/07 21:55 / cp
Lead	ND	mg/L		0.05		E200.8	07/23/07 22:59 / bws
Manganese	ND	mg/L		0.01		E200.8	07/23/07 22:59 / bws
Mercury	ND	mg/L		0.001		E200.8	07/23/07 22:59 / bws
Molybdenum	0.2	mg/L		0.1		E200.8	07/23/07 22:59 / bws
Selenium	0.002	mg/L		0.001		E200.8	07/23/07 22:59 / bws
Uranium	0.266	mg/L		0.0003		E200.8	07/23/07 22:59 / bws
RADIONUCLIDES - DISSOLVED							
Radium 226	937	pCi/L		0.2		E903.0	07/24/07 14:48 / trs
Radium 226 precision (±)	10.0	pCi/L				E903.0	07/24/07 14:48 / trs
DATA QUALITY							
A/C Balance (± 5)	-2.06	%				Calculation	07/30/07 12:53 / bws
Anions	6.97	meq/L				Calculation	07/30/07 12:53 / bws
Cations	6.69	meq/L				Calculation	07/30/07 12:53 / bws
Solids, Total Dissolved Calculated	407	mg/L				Calculation	07/30/07 12:53 / bws
TDS Balance (0.80 - 1.20)	1.04	dec. %				Calculation	07/30/07 12:53 / bws

Report Definitions:
RL - Analyte reporting limit.
QCL - Quality control limit.
D - RL increased due to sample matrix interference.
MCL - Maximum contaminant level.
ND - Not detected at the reporting limit.

LABORATORY ANALYTICAL REPORT

Client: Uranium Energy Corp
Project: Weesatche Baseline Sampling
Lab ID: C07070627-002
Client Sample ID: RBLB-1

Report Date: 08/01/07
Collection Date: 07/12/07 11:45
DateReceived: 07/13/07
Matrix: Aqueous

Analyses	Result	Units	Qualifiers	RL	MCL/ QCL	Method	Analysis Date / By
MAJOR IONS							
Alkalinity, Total as CaCO3	272	mg/L		1		A2320 B	07/23/07 08:37 / bas
Carbonate as CO3	ND	mg/L		1		A2320 B	07/23/07 08:37 / bas
Bicarbonate as HCO3	332	mg/L		1		A2320 B	07/23/07 08:37 / bas
Calcium	100	mg/L		0.5		E200.7	07/26/07 15:43 / ts
Chloride	161	mg/L		1		A4500-Cl B	07/18/07 11:26 / jl
Fluoride	0.7	mg/L		0.1		A4500-F C	07/23/07 12:30 / bas
Magnesium	19.0	mg/L		0.5		E200.7	07/26/07 15:43 / ts
Nitrogen, Ammonia as N	ND	mg/L		0.05		A4500-NH3 G	07/17/07 15:32 / ljl
Nitrogen, Nitrate+Nitrite as N	ND	mg/L		0.1		E353.2	07/16/07 15:42 / jal
Potassium	6.6	mg/L		0.5		E200.7	07/26/07 15:43 / ts
Silica	32.2	mg/L		0.1		E200.7	07/26/07 15:43 / ts
Sodium	98.3	mg/L		0.5		E200.7	07/26/07 15:43 / ts
Sulfate	82	mg/L	D	2		A4500-SO4 E	07/17/07 11:12 / zd
PHYSICAL PROPERTIES							
Conductivity	1160	umhos/cm		1.0		A2510 B	07/16/07 14:55 / ml
pH	7.43	s.u.		0.01		A4500-H B	07/16/07 14:55 / ml
Solids, Total Dissolved TDS @ 180 C	644	mg/L		10		A2540 C	07/16/07 15:16 / ml
METALS - DISSOLVED							
Arsenic	0.006	mg/L		0.001		E200.8	07/28/07 01:22 / bws
Cadmium	ND	mg/L		0.01		E200.8	07/28/07 01:22 / bws
Iron	ND	mg/L		0.03		E200.7	07/26/07 15:43 / ts
Lead	ND	mg/L		0.05		E200.8	07/28/07 01:22 / bws
Manganese	0.02	mg/L		0.01		E200.8	07/28/07 01:22 / bws
Mercury	ND	mg/L		0.001		E200.8	07/28/07 01:22 / bws
Molybdenum	ND	mg/L		0.1		E200.8	07/28/07 01:22 / bws
Selenium	0.001	mg/L		0.001		E200.8	07/28/07 01:22 / bws
Uranium	0.0615	mg/L		0.0003		E200.8	07/28/07 01:22 / bws
RADIONUCLIDES - DISSOLVED							
Radium 226	393	pCi/L		0.2		E903.0	07/24/07 16:15 / trs
Radium 226 precision (±)	5.7	pCi/L				E903.0	07/24/07 16:15 / trs
DATA QUALITY							
A/C Balance (± 5)	-3.18	%				Calculation	07/28/07 12:58 / bws
Anions	11.7	meq/L				Calculation	07/28/07 12:58 / bws
Cations	11.0	meq/L				Calculation	07/28/07 12:58 / bws
Solids, Total Dissolved Calculated	663	mg/L				Calculation	07/28/07 12:58 / bws
TDS Balance (0.80 - 1.20)	0.970	dec. %				Calculation	07/28/07 12:58 / bws

Report Definitions:
RL - Analyte reporting limit.
QCL - Quality control limit.
D - RL increased due to sample matrix interference.
MCL - Maximum contaminant level.
ND - Not detected at the reporting limit.

GROUND WATER ANALYSIS REPORT-IN SITU MINING-URANIUM

COMPANY: URANIUM ENERGY CORPORATION REPORT DATE: March 20, 2007
IDENTIFICATION: RBLB-2
2-21-07
LABORATORY: JORDAN LABORATORIES, INC.

MAJOR AND SECONDARY CONSTITUENTS

ITEM	MG/L	EPM	CONDUCTANCE	%EPM
CALCIUM(CA)	78	3.89	202.28	42.01
MAGNESIUM(MG)	10	0.82	38.21	8.86
SODIUM(NA)	94	4.09	200.00	44.17
POTASSIUM(K)	18	0.46	33.12	4.97
	TOTAL CATION	9.26		
CARBONATE(CO3)	0	0.00	0.00	0.00
BICARBONATE(HCO3)	255	4.18	182.25	46.24
SULFATE(SO4)	29	0.60	44.34	6.64
CHLORIDE(CL)	151	4.26	323.33	47.12
NITRATE(NO3-N)	<0.01			
FLUORIDE(F)	0.55		TOTAL 1023.54	
SILICA(SIO2)	32			
	TOTAL ANION	9.04		
TOTAL ION	668			

TDS(180 C)	560		
TOT ION-0.5 HCO3=	540		
EC(25 C)	939 UMHOS		
EC(DIL)= 93.6 X 11.11=	1040 UMHOS		
ALK. AS CACO3	209		
PH	7.60		

ACCURACY CHECK

		RANGE
ION	1.024	(.96 T0 1.04)
TDS	1.037	(.90 TO 1.10)
EC	1.016	(.95 TO 1.05)

RADIATION-PICOCURIES/LITER

GROSS ALPHA		+/-
GROSS BETA		+/-
RADIUM 226	12	+/- 1

MINOR AND TRACE CONSTITUENTS

ITEM	MG/L	ITEM	MG/L	ITEM	MG/L
ARSENIC(AS)	0.007	MANGANESE(MN)	<0.01	VANADIUM(V)	
BARIUM(BA)		MERCURY(HG)	<0.0002	ZINC(ZN)	
CADMIUM(CD)	0.0003	MOLY.(MO)	<0.1	BORON(B)	
CHROM.(CR)		NICKEL(NI)		AMMONIA-N	<0.1
COPPER(CU)		SELENIUM(SE)	<0.001		
IRON(FE)	0.02	SILVER(AG)			
LEAD(PB)	0.001	URANIUM(U)	0.059		

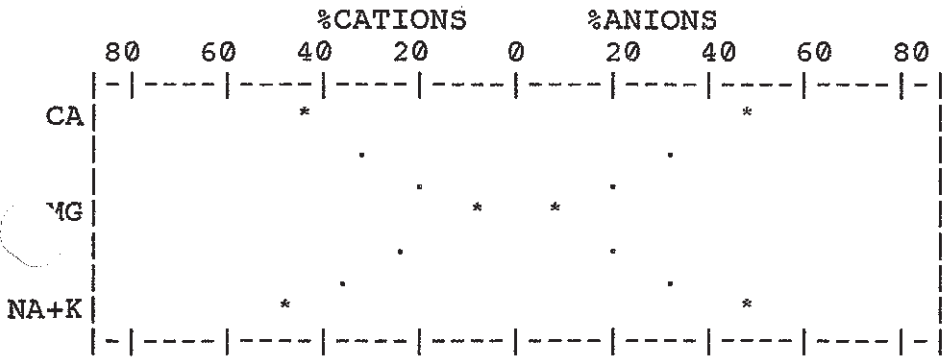

NOTE: QC Documnetation is on File at Jordan Labs in Corpus Christi, TX

CHECKED BY:

LAB.NO:M45-584

LABORATORY ANALYTICAL REPORT

Client: Uranium Energy Corp
Project: Weesatche Baseline Sampling
Lab ID: C07070627-001
Client Sample ID: RBLB-3

Report Date: 08/01/07
Collection Date: 07/12/07 10:30
DateReceived: 07/13/07
Matrix: Aqueous

Analyses	Result	Units	Qualifiers	RL	MCL/ QCL	Method	Analysis Date / By
MAJOR IONS							
Alkalinity, Total as CaCO3	253	mg/L		1		A2320 B	07/23/07 08:37 / bas
Carbonate as CO3	3	mg/L		1		A2320 B	07/23/07 08:37 / bas
Bicarbonate as HCO3	302	mg/L		1		A2320 B	07/23/07 08:37 / bas
Calcium	91.2	mg/L		0.5		E200.7	07/26/07 15:39 / ts
Chloride	163	mg/L		1		A4500-Cl B	07/18/07 11:25 / jl
Fluoride	0.7	mg/L		0.1		A4500-F C	07/23/07 12:27 / bas
Magnesium	15.8	mg/L		0.5		E200.7	07/26/07 15:39 / ts
Nitrogen, Ammonia as N	0.05	mg/L		0.05		A4500-NH3 G	07/17/07 15:30 / ljl
Nitrogen, Nitrate+Nitrite as N	ND	mg/L		0.1		E353.2	07/16/07 15:39 / jal
Potassium	8.9	mg/L		0.5		E200.7	07/26/07 15:39 / ts
Silica	31.6	mg/L		0.1		E200.7	07/26/07 15:39 / ts
Sodium	95.3	mg/L		0.5		E200.7	07/26/07 15:39 / ts
Sulfate	41	mg/L		1		A4500-SO4 E	07/17/07 11:09 / zd
PHYSICAL PROPERTIES							
Conductivity	1070	umhos/cm		1.0		A2510 B	07/16/07 14:53 / ml
pH	7.79	s.u.		0.01		A4500-H B	07/16/07 14:53 / ml
Solids, Total Dissolved TDS @ 180 C	614	mg/L		10		A2540 C	07/16/07 15:16 / ml
METALS - DISSOLVED							
Arsenic	0.030	mg/L		0.001		E200.8	07/28/07 01:16 / bws
Cadmium	ND	mg/L		0.01		E200.8	07/28/07 01:16 / bws
Iron	ND	mg/L		0.03		E200.7	07/26/07 15:39 / ts
Lead	ND	mg/L		0.05		E200.8	07/28/07 01:16 / bws
Manganese	0.02	mg/L		0.01		E200.8	07/28/07 01:16 / bws
Mercury	ND	mg/L		0.001		E200.8	07/28/07 01:16 / bws
Molybdenum	ND	mg/L		0.1		E200.8	07/28/07 01:16 / bws
Selenium	0.002	mg/L		0.001		E200.8	07/28/07 01:16 / bws
Uranium	0.0797	mg/L		0.0003		E200.8	07/28/07 01:16 / bws
RADIONUCLIDES - DISSOLVED							
Radium 226	111	pCi/L		0.2		E903.0	07/24/07 16:15 / trs
Radium 226 precision (±)	3.9	pCi/L				E903.0	07/24/07 16:15 / trs
DATA QUALITY							
A/C Balance (± 5)	-1.40	%				Calculation	07/28/07 12:57 / bws
Anions	10.5	meq/L				Calculation	07/28/07 12:57 / bws
Cations	10.2	meq/L				Calculation	07/28/07 12:57 / bws
Solids, Total Dissolved Calculated	599	mg/L				Calculation	07/28/07 12:57 / bws
TDS Balance (0.80 - 1.20)	1.03	dec. %				Calculation	07/28/07 12:57 / bws

Report Definitions:
RL - Analyte reporting limit.
QCL - Quality control limit.
MCL - Maximum contaminant level.
ND - Not detected at the reporting limit.

LABORATORY ANALYTICAL REPORT

Client: Uranium Energy Corp
Project: Weesatche Baseline Sampling
Lab ID: C07070563-004
Client Sample ID: RBLB-4 DP

Report Date: 08/01/07
Collection Date: 07/11/07 15:03
DateReceived: 07/12/07
Matrix: Aqueous

Analyses	Result	Units	Qualifiers	RL	MCL/ QCL	Method	Analysis Date / By
MAJOR IONS							
Alkalinity, Total as CaCO3	266	mg/L		1		A2320 B	07/17/07 09:37 / ljl
Carbonate as CO3	ND	mg/L		1		A2320 B	07/17/07 09:37 / ljl
Bicarbonate as HCO3	325	mg/L		1		A2320 B	07/17/07 09:37 / ljl
Calcium	101	mg/L		0.5		E200.7	07/18/07 17:07 / ts
Chloride	150	mg/L		1		A4500-Cl B	07/13/07 18:07 / jl
Fluoride	0.7	mg/L		0.1		A4500-F C	07/13/07 14:24 / bas
Magnesium	20.2	mg/L		0.5		E200.7	07/18/07 17:07 / ts
Nitrogen, Ammonia as N	0.08	mg/L		0.05		A4500-NH3 G	07/18/07 10:41 / jal
Nitrogen, Nitrate+Nitrite as N	ND	mg/L		0.1		E353.2	07/13/07 13:19 / ljl
Potassium	7.1	mg/L		0.5		E200.7	07/18/07 17:07 / ts
Silica	32.0	mg/L		0.1		E200.7	07/18/07 17:07 / ts
Sodium	99.7	mg/L		0.5		E200.7	07/18/07 17:07 / ts
Sulfate	69	mg/L	D	2		A4500-SO4 E	07/13/07 12:57 / zd
PHYSICAL PROPERTIES							
Conductivity	1140	umhos/cm		1.0		A2510 B	07/13/07 14:56 / ml
pH	7.54	s.u.		0.01		A4500-H B	07/13/07 14:56 / ml
Solids, Total Dissolved TDS @ 180 C	666	mg/L		10		A2540 C	07/13/07 16:19 / ml
METALS - DISSOLVED							
Arsenic	0.004	mg/L		0.001		E200.8	07/17/07 05:17 / bws
Cadmium	ND	mg/L		0.01		E200.8	07/17/07 05:17 / bws
Iron	ND	mg/L		0.03		E200.7	07/18/07 17:07 / ts
Lead	ND	mg/L		0.05		E200.8	07/17/07 05:17 / bws
Manganese	ND	mg/L		0.01		E200.8	07/17/07 05:17 / bws
Mercury	ND	mg/L		0.001		E200.8	07/17/07 05:17 / bws
Molybdenum	ND	mg/L		0.1		E200.8	07/17/07 05:17 / bws
Selenium	0.001	mg/L		0.001		E200.8	07/17/07 05:17 / bws
Uranium	0.0060	mg/L		0.0003		E200.8	07/17/07 05:17 / bws
RADIONUCLIDES - DISSOLVED							
Radium 226	37.2	pCi/L		0.2		E903.0	07/23/07 14:02 / crw
Radium 226 precision (±)	2.1	pCi/L				E903.0	07/23/07 14:02 / crw
DATA QUALITY							
A/C Balance (± 5)	1.01	%				Calculation	07/19/07 17:09 / bws
Anions	11.0	meq/L				Calculation	07/19/07 17:09 / bws
Cations	11.2	meq/L				Calculation	07/19/07 17:09 / bws
Solids, Total Dissolved Calculated	639	mg/L				Calculation	07/19/07 17:09 / bws
TDS Balance (0.80 - 1.20)	1.04	dec. %				Calculation	07/19/07 17:09 / bws

Report Definitions:
RL - Analyte reporting limit.
QCL - Quality control limit.
D - RL increased due to sample matrix interference.
MCL - Maximum contaminant level.
ND - Not detected at the reporting limit.

LABORATORY ANALYTICAL REPORT

Client: Uranium Energy Corp
Project: Weesatche Baseline Sampling
Lab ID: C07070627-003
Client Sample ID: RBLB-5

Report Date: 08/01/07
Collection Date: 07/12/07 12:50
DateReceived: 07/13/07
Matrix: Aqueous

Analyses	Result	Units	Qualifiers	RL	MCL/ QCL	Method	Analysis Date / By
MAJOR IONS							
Alkalinity, Total as CaCO3	279	mg/L		1		A2320 B	07/23/07 08:37 / bas
Carbonate as CO3	ND	mg/L		1		A2320 B	07/23/07 08:37 / bas
Bicarbonate as HCO3	340	mg/L		1		A2320 B	07/23/07 08:37 / bas
Calcium	88.2	mg/L		0.5		E200.7	07/26/07 15:46 / ts
Chloride	163	mg/L		1		A4500-Cl B	07/18/07 11:27 / jl
Fluoride	0.8	mg/L		0.1		A4500-F C	07/23/07 12:32 / bas
Magnesium	16.5	mg/L		0.5		E200.7	07/26/07 15:46 / ts
Nitrogen, Ammonia as N	0.06	mg/L		0.05		A4500-NH3 G	07/17/07 15:34 / ljl
Nitrogen, Nitrate+Nitrite as N	ND	mg/L		0.1		E353.2	07/16/07 15:52 / jal
Potassium	4.4	mg/L		0.5		E200.7	07/26/07 15:46 / ts
Silica	31.6	mg/L		0.1		E200.7	07/26/07 15:46 / ts
Sodium	93.8	mg/L		0.5		E200.7	07/26/07 15:46 / ts
Sulfate	9	mg/L		1		A4500-SO4 E	07/17/07 11:16 / zd
PHYSICAL PROPERTIES							
Conductivity	1050	umhos/cm		1.0		A2510 B	07/16/07 14:58 / ml
pH	7.63	s.u.		0.01		A4500-H B	07/16/07 14:58 / ml
Solids, Total Dissolved TDS @ 180 C	584	mg/L		10		A2540 C	07/16/07 15:16 / ml
METALS - DISSOLVED							
Arsenic	0.009	mg/L		0.001		E200.8	07/28/07 03:11 / bws
Cadmium	ND	mg/L		0.01		E200.8	07/28/07 03:11 / bws
Iron	ND	mg/L		0.03		E200.7	07/26/07 15:46 / ts
Lead	ND	mg/L		0.05		E200.8	07/28/07 03:11 / bws
Manganese	0.02	mg/L		0.01		E200.8	07/28/07 03:11 / bws
Mercury	ND	mg/L		0.001		E200.8	07/28/07 03:11 / bws
Molybdenum	ND	mg/L		0.1		E200.8	07/28/07 03:11 / bws
Selenium	0.001	mg/L		0.001		E200.8	07/28/07 03:11 / bws
Uranium	0.0600	mg/L		0.0003		E200.8	07/28/07 03:11 / bws
RADIONUCLIDES - DISSOLVED							
Radium 226	1090	pCi/L		0.2		E903.0	07/24/07 16:15 / trs
Radium 226 precision (±)	9.6	pCi/L				E903.0	07/24/07 16:15 / trs
DATA QUALITY							
A/C Balance (± 5)	-2.12	%				Calculation	07/28/07 12:58 / bws
Anions	10.4	meq/L				Calculation	07/28/07 12:58 / bws
Cations	9.97	meq/L				Calculation	07/28/07 12:58 / bws
Solids, Total Dissolved Calculated	575	mg/L				Calculation	07/28/07 12:58 / bws
TDS Balance (0.80 - 1.20)	1.02	dec. %				Calculation	07/28/07 12:58 / bws

Report Definitions:
RL - Analyte reporting limit.
QCL - Quality control limit.
MCL - Maximum contaminant level.
ND - Not detected at the reporting limit.

LABORATORY ANALYTICAL REPORT

Client: Uranium Energy Corp
Project: Weesatche Baseline Sampling
Lab ID: C07070563-001
Client Sample ID: RBLC-1

Report Date: 08/01/07
Collection Date: 07/11/07 09:33
DateReceived: 07/12/07
Matrix: Aqueous

Analyses	Result	Units	Qualifiers	RL	MCL/ QCL	Method	Analysis Date / By
MAJOR IONS							
Alkalinity, Total as CaCO3	242	mg/L		1		A2320 B	07/17/07 09:23 / ljl
Carbonate as CO3	ND	mg/L		1		A2320 B	07/17/07 09:23 / ljl
Bicarbonate as HCO3	295	mg/L		1		A2320 B	07/17/07 09:23 / ljl
Calcium	74.7	mg/L		0.5		E200.7	07/18/07 16:57 / ts
Chloride	130	mg/L		1		A4500-Cl B	07/13/07 16:55 / jl
Fluoride	0.6	mg/L		0.1		A4500-F C	07/13/07 14:21 / bas
Magnesium	14.6	mg/L		0.5		E200.7	07/18/07 16:57 / ts
Nitrogen, Ammonia as N	0.11	mg/L		0.05		A4500-NH3 G	07/18/07 10:29 / jal
Nitrogen, Nitrate+Nitrite as N	ND	mg/L		0.1		E353.2	07/13/07 13:08 / ljl
Potassium	14.6	mg/L		0.5		E200.7	07/18/07 16:57 / ts
Silica	23.8	mg/L		0.1		E200.7	07/18/07 16:57 / ts
Sodium	92.0	mg/L		0.5		E200.7	07/18/07 16:57 / ts
Sulfate	57	mg/L		1		A4500-SO4 E	07/13/07 11:10 / zd
PHYSICAL PROPERTIES							
Conductivity	986	umhos/cm		1.0		A2510 B	07/13/07 14:48 / ml
pH	7.59	s.u.		0.01		A4500-H B	07/13/07 14:48 / ml
Solids, Total Dissolved TDS @ 180 C	558	mg/L		10		A2540 C	07/13/07 16:17 / ml
METALS - DISSOLVED							
Arsenic	0.009	mg/L		0.001		E200.8	07/17/07 04:30 / bws
Cadmium	ND	mg/L		0.01		E200.8	07/17/07 04:30 / bws
Iron	ND	mg/L		0.03		E200.7	07/18/07 16:57 / ts
Lead	ND	mg/L		0.05		E200.8	07/17/07 04:30 / bws
Manganese	ND	mg/L		0.01		E200.8	07/17/07 04:30 / bws
Mercury	ND	mg/L		0.001		E200.8	07/17/07 04:30 / bws
Molybdenum	ND	mg/L		0.1		E200.8	07/17/07 04:30 / bws
Selenium	0.005	mg/L		0.001		E200.8	07/17/07 04:30 / bws
Uranium	0.0081	mg/L		0.0003		E200.8	07/17/07 04:30 / bws
RADIONUCLIDES - DISSOLVED							
Radium 226	10.0	pCi/L		0.2		E903.0	07/23/07 14:02 / crw
Radium 226 precision (±)	1.1	pCi/L				E903.0	07/23/07 14:02 / crw
DATA QUALITY							
A/C Balance (± 5)	-2.05	%				Calculation	07/19/07 16:41 / bws
Anions	9.70	meq/L				Calculation	07/19/07 16:41 / bws
Cations	9.31	meq/L				Calculation	07/19/07 16:41 / bws
Solids, Total Dissolved Calculated	552	mg/L				Calculation	07/19/07 16:41 / bws
TDS Balance (0.80 - 1.20)	1.01	dec. %				Calculation	07/19/07 16:41 / bws

Report Definitions:
RL - Analyte reporting limit.
QCL - Quality control limit.
MCL - Maximum contaminant level.
ND - Not detected at the reporting limit.

LABORATORY ANALYTICAL REPORT

Client: Uranium Energy Corp
Project: Weesatche Baseline Sampling
Lab ID: C07070563-002
Client Sample ID: RBLC-2

Report Date: 08/01/07
Collection Date: 07/11/07 12:03
DateReceived: 07/12/07
Matrix: Aqueous

Analyses	Result	Units	Qualifiers	RL	MCL/ QCL	Method	Analysis Date / By
MAJOR IONS							
Alkalinity, Total as CaCO3	204	mg/L		1		A2320 B	07/17/07 09:26 / ljl
Carbonate as CO3	ND	mg/L		1		A2320 B	07/17/07 09:26 / ljl
Bicarbonate as HCO3	249	mg/L		1		A2320 B	07/17/07 09:26 / ljl
Calcium	71.0	mg/L		0.5		E200.7	07/18/07 17:01 / ts
Chloride	125	mg/L		1		A4500-Cl B	07/13/07 17:41 / jl
Fluoride	0.6	mg/L		0.1		A4500-F C	07/13/07 14:22 / bas
Magnesium	9.8	mg/L		0.5		E200.7	07/18/07 17:01 / ts
Nitrogen, Ammonia as N	0.09	mg/L		0.05		A4500-NH3 G	07/18/07 10:31 / jal
Nitrogen, Nitrate+Nitrite as N	ND	mg/L		0.1		E353.2	07/13/07 13:10 / ljl
Potassium	11.9	mg/L		0.5		E200.7	07/18/07 17:01 / ts
Silica	21.5	mg/L		0.1		E200.7	07/18/07 17:01 / ts
Sodium	96.6	mg/L		0.5		E200.7	07/18/07 17:01 / ts
Sulfate	32	mg/L		1		A4500-SO4 E	07/13/07 11:22 / zd
PHYSICAL PROPERTIES							
Conductivity	890	umhos/cm		1.0		A2510 B	07/13/07 14:49 / ml
pH	7.94	s.u.		0.01		A4500-H B	07/13/07 14:49 / ml
Solids, Total Dissolved TDS @ 180 C	534	mg/L		10		A2540 C	07/13/07 16:18 / ml
METALS - DISSOLVED							
Arsenic	0.024	mg/L		0.001		E200.8	07/17/07 05:03 / bws
Cadmium	ND	mg/L		0.01		E200.8	07/17/07 05:03 / bws
Iron	0.03	mg/L		0.03		E200.7	07/18/07 17:01 / ts
Lead	ND	mg/L		0.05		E200.8	07/17/07 05:03 / bws
Manganese	ND	mg/L		0.01		E200.8	07/17/07 05:03 / bws
Mercury	ND	mg/L		0.001		E200.8	07/17/07 05:03 / bws
Molybdenum	1.9	mg/L		0.1		E200.8	07/17/07 05:03 / bws
Selenium	0.024	mg/L		0.001		E200.8	07/17/07 05:03 / bws
Uranium	6.68	mg/L		0.0003		E200.8	07/17/07 05:03 / bws
RADIONUCLIDES - DISSOLVED							
Radium 226	692	pCi/L		0.2		E903.0	07/23/07 14:02 / crw
Radium 226 precision (±)	9.0	pCi/L				E903.0	07/23/07 14:02 / crw
DATA QUALITY							
A/C Balance (± 5)	3.32	%				Calculation	07/19/07 16:42 / bws
Anions	8.30	meq/L				Calculation	07/19/07 16:42 / bws
Cations	8.87	meq/L				Calculation	07/19/07 16:42 / bws
Solids, Total Dissolved Calculated	491	mg/L				Calculation	07/19/07 16:42 / bws
TDS Balance (0.80 - 1.20)	1.09	dec. %				Calculation	07/19/07 16:42 / bws

Report Definitions:
RL - Analyte reporting limit.
QCL - Quality control limit.
MCL - Maximum contaminant level.
ND - Not detected at the reporting limit.

ENERGY LABORATORIES, INC. * 2393 Salt Creek Hwy (82601) * PO Box 3258 * Casper, WY 82602
Toll Free 888.235.0515 * 307.235.0515 * FAX 307.234.1639 * casper@energylab.com * www.energylab.com

LABORATORY ANALYTICAL REPORT

Client: Uranium Energy Corp
Project: Weesatche Baseline Sampling
Lab ID: C07080504-004
Client Sample ID RBLC-3

Report Date: 08/27/07
Collection Date: 08/07/07 10:33
DateReceived: 08/08/07
Matrix: Aqueous

Analyses	Result	Units	Qualifier	RL	MCL/ QCL	Method	Analysis Date / By
MAJOR IONS							
Alkalinity, Total as CaCO3	278	mg/L		1		A2320 B	08/10/07 11:45 / bas
Carbonate as CO3	ND	mg/L		1		A2320 B	08/10/07 11:45 / bas
Bicarbonate as HCO3	340	mg/L		1		A2320 B	08/10/07 11:45 / bas
Calcium	79.8	mg/L		0.5		E200.7	08/20/07 18:24 / ts
Chloride	150	mg/L		1		A4500-Cl B	08/13/07 14:04 / jl
Fluoride	0.5	mg/L		0.1		A4500-F C	08/14/07 10:41 / bas
Magnesium	17.1	mg/L		0.5		E200.7	08/20/07 18:24 / ts
Nitrogen, Ammonia as N	ND	mg/L		0.05		A4500-NH3 G	08/10/07 12:51 / ljl
Nitrogen, Nitrate+Nitrite as N	ND	mg/L		0.1		E353.2	08/13/07 16:24 / ljl
Potassium	4.2	mg/L		0.5		E200.7	08/20/07 18:24 / ts
Silica	25.6	mg/L		0.1		E200.7	08/20/07 18:24 / ts
Sodium	97.1	mg/L		0.5		E200.7	08/20/07 18:24 / ts
Sulfate	11	mg/L		1		A4500-SO4 E	08/10/07 10:44 / zd
PHYSICAL PROPERTIES							
Conductivity	982	umhos/cm		1.0		A2510 B	08/09/07 13:26 / ml
pH	7.45	s.u.		0.01		A4500-H B	08/09/07 13:26 / ml
Solids, Total Dissolved TDS @ 180 C	510	mg/L		10		A2540 C	08/09/07 15:53 / ml
METALS - DISSOLVED							
Arsenic	0.006	mg/L		0.001		E200.8	08/24/07 00:47 / bws
Cadmium	ND	mg/L		0.01		E200.8	08/24/07 00:47 / bws
Iron	ND	mg/L		0.03		E200.7	08/20/07 18:24 / ts
Lead	ND	mg/L		0.05		E200.7	08/20/07 18:24 / ts
Manganese	ND	mg/L		0.01		E200.8	08/24/07 00:47 / bws
Mercury	ND	mg/L		0.001		E200.8	08/24/07 00:47 / bws
Molybdenum	ND	mg/L		0.1		E200.8	08/24/07 00:47 / bws
Selenium	0.001	mg/L		0.001		E200.8	08/24/07 00:47 / bws
Uranium	0.0309	mg/L		0.0003		E200.8	08/24/07 00:47 / bws
RADIONUCLIDES - DISSOLVED							
Radium 226	71.2	pCi/L		0.2		E903.0	08/20/07 15:56 / crw
Radium 226 precision (±)	2.6	pCi/L				E903.0	08/20/07 15:56 / crw
DATA QUALITY							
A/C Balance (± 5)	-1.64	%				Calculation	08/24/07 11:55 / bws
Anions	10.1	meq/L				Calculation	08/24/07 11:55 / bws
Cations	9.73	meq/L				Calculation	08/24/07 11:55 / bws
Solids, Total Dissolved Calculated	552	mg/L				Calculation	08/24/07 11:55 / bws
TDS Balance (0.80 - 1.20)	0.920	dec. %				Calculation	08/24/07 11:55 / bws

Report Definitions:
RL - Analyte reporting limit.
QCL - Quality control limit.
MCL - Maximum contaminant level.
ND - Not detected at the reporting limit.

9-28-07

LABORATORY ANALYTICAL REPORT

Client: Uranium Energy Corp
Project: Weesatche Baseline Sampling
Lab ID: C07070563-003
Client Sample ID: RBLC-4

Report Date: 08/01/07
Collection Date: 07/11/07 13:22
DateReceived: 07/12/07
Matrix: Aqueous

Analyses	Result	Units	Qualifiers	RL	MCL/ QCL	Method	Analysis Date / By
MAJOR IONS							
Alkalinity, Total as CaCO3	282	mg/L		1		A2320 B	07/17/07 09:35 / ljl
Carbonate as CO3	ND	mg/L		1		A2320 B	07/17/07 09:35 / ljl
Bicarbonate as HCO3	344	mg/L		1		A2320 B	07/17/07 09:35 / ljl
Calcium	80.8	mg/L		0.5		E200.7	07/18/07 17:04 / ts
Chloride	130	mg/L		1		A4500-Cl B	07/13/07 17:33 / jl
Fluoride	0.5	mg/L		0.1		A4500-F C	07/13/07 14:23 / bas
Magnesium	17.0	mg/L		0.5		E200.7	07/18/07 17:04 / ts
Nitrogen, Ammonia as N	0.09	mg/L		0.05		A4500-NH3 G	07/18/07 10:39 / jal
Nitrogen, Nitrate+Nitrite as N	ND	mg/L		0.1		E353.2	07/13/07 13:17 / ljl
Potassium	7.1	mg/L		0.5		E200.7	07/18/07 17:04 / ts
Silica	24.8	mg/L		0.1		E200.7	07/18/07 17:04 / ts
Sodium	99.7	mg/L		0.5		E200.7	07/18/07 17:04 / ts
Sulfate	11	mg/L		1		A4500-SO4 E	07/13/07 12:44 / zd
PHYSICAL PROPERTIES							
Conductivity	1010	umhos/cm		1.0		A2510 B	07/13/07 14:52 / ml
pH	7.71	s.u.		0.01		A4500-H B	07/13/07 14:52 / ml
Solids, Total Dissolved TDS @ 180 C	566	mg/L		10		A2540 C	07/13/07 16:19 / ml
METALS - DISSOLVED							
Arsenic	0.004	mg/L		0.001		E200.8	07/17/07 05:10 / bws
Cadmium	ND	mg/L		0.01		E200.8	07/17/07 05:10 / bws
Iron	0.05	mg/L		0.03		E200.7	07/18/07 17:04 / ts
Lead	ND	mg/L		0.05		E200.8	07/17/07 05:10 / bws
Manganese	ND	mg/L		0.01		E200.8	07/17/07 05:10 / bws
Mercury	ND	mg/L		0.001		E200.8	07/17/07 05:10 / bws
Molybdenum	ND	mg/L		0.1		E200.8	07/17/07 05:10 / bws
Selenium	0.001	mg/L		0.001		E200.8	07/17/07 05:10 / bws
Uranium	0.0546	mg/L		0.0003		E200.8	07/17/07 05:10 / bws
RADIONUCLIDES - DISSOLVED							
Radium 226	136	pCi/L		0.2		E903.0	07/23/07 14:02 / crw
Radium 226 precision (±)	3.9	pCi/L				E903.0	07/23/07 14:02 / crw
DATA QUALITY							
A/C Balance (± 5)	2.15	%				Calculation	07/19/07 16:42 / bws
Anions	9.54	meq/L				Calculation	07/19/07 16:42 / bws
Cations	9.96	meq/L				Calculation	07/19/07 16:42 / bws
Solids, Total Dissolved Calculated	540	mg/L				Calculation	07/19/07 16:42 / bws
TDS Balance (0.80 - 1.20)	1.05	dec. %				Calculation	07/19/07 16:42 / bws

Report Definitions:
RL - Analyte reporting limit.
QCL - Quality control limit.
MCL - Maximum contaminant level.
ND - Not detected at the reporting limit.

GROUND WATER ANALYSIS REPORT IN SITU MINING URANIUM

COMPANY: URANIUM ENERGY CORPORATION REPORT DATE: March 20, 2007
IDENTIFICATION: RBLC-7
2-22-07
LABORATORY: JORDAN LABORATORIES, INC.

MAJOR AND SECONDARY CONSTITUENTS

ITEM	MG/L	EPM	CONDUCTANCE	%EPM
CALCIUM(CA)	95	4.74	246.48	45.40
MAGNESIUM(MG)	17	1.40	65.24	13.41
SODIUM(NA)	96	4.18	204.40	40.04
POTASSIUM(K)	4.8	0.12	8.64	1.15
	TOTAL CATION	10.44		
CARBONATE(CO3)	0	0.00	0.00	0.00
BICARBONATE(HCO3)	328	5.38	234.57	52.28
SULFATE(SO4)	38	0.79	58.38	7.68
CHLORIDE(CL)	146	4.12	312.71	40.04
NITRATE(NO3-N)	<0.01			
FLUORIDE(F)	0.55	TOTAL	1130.42	
SILICA(SIO2)	30			
	TOTAL ANION	10.29		
TOTAL ION	755			

TDS(180 C)	540
TOT ION-0.5 HCO3=	591
EC(25 C)	1010 UMHOS
EC(DIL)=100.8 X 11.11=	1120 UMHOS
ALK. AS CACO3	269
PH	7.48

ACCURACY CHECK

		RANGE
ION	1.015	(.96 T0 1.04)
TDS	0.913	(.90 TO 1.10)
EC	0.991	(.95 TO 1.05)

RADIATION-PICOCURIES/LITER

GROSS ALPHA		+/-	
GROSS BETA		+/-	
RADIUM 226	18	+/-	1

MINOR AND TRACE CONSTITUENTS

ITEM	MG/L	ITEM	MG/L	ITEM	MG/L
ARSENIC(AS)	0.001	MANGANESE(MN)	0.02	VANADIUM(V)	
BARIUM(BA)		MERCURY(HG)	<0.0002	ZINC(ZN)	
CADMIUM(CD)	0.0001	MOLY.(MO)	<0.1	BORON(B)	
CHROM.(CR)		NICKEL(NI)		AMMONIA-N	<0.1
COPPER(CU)		SELENIUM(SE)	0.006		
IRON(FE)	0.01	SILVER(AG)			
LEAD(PB)	0.001	URANIUM(U)	0.020		

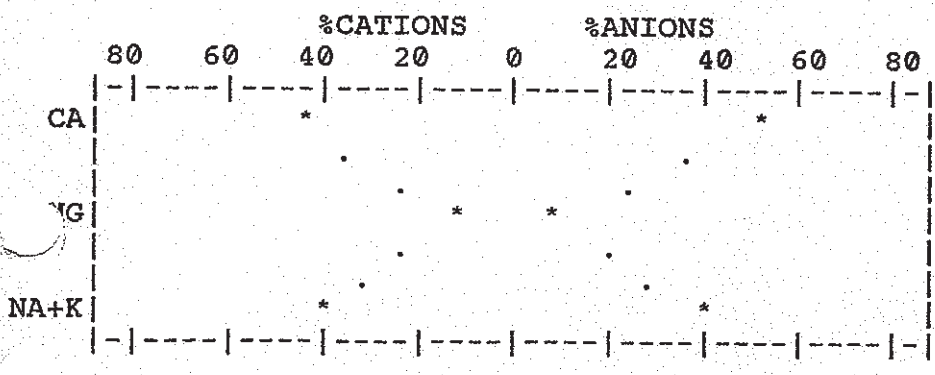

NOTE: QC Documnetation is on File at Jordan Labs in Corpus Christi, TX

CHECKED BY:

CJC

LAB.NO:M45-602

GROUND WATER ANALYSIS REPORT-IN SITU MINING-URANIUM

COMPANY: URANIUM ENERGY CORPORATION REPORT DATE: March 20, 2007
IDENTIFICATION: RBLD-1
2-21-07
LABORATORY: JORDAN LABORATORIES, INC.

MAJOR AND SECONDARY CONSTITUENTS

ITEM	MG/L	EPM	CONDUCTANCE	%EPM
CALCIUM(CA)	88	4.39	228.28	41.10
MAGNESIUM(MG)	19	1.56	72.70	14.61
SODIUM(NA)	106	4.61	225.43	43.16
POTASSIUM(K)	4.5	0.12	8.64	1.12
	TOTAL CATION	10.68		
CARBONATE(CO3)	0	0.00	0.00	0.00
BICARBONATE(HCO3)	334	5.47	238.49	53.06
SULFATE(SO4)	10	0.21	15.52	2.04
CHLORIDE(CL)	164	4.63	351.42	44.91
NITRATE(NO3-N)	<0.01			
FLUORIDE(F)	0.49	TOTAL	1140.47	
SILICA(SIO2)	29			
	TOTAL ANION	10.31		
TOTAL ION	755			

TDS(180 C)	598		
TOT ION-0.5 HCO3=	588		
EC(25 C)	996 UMHOS		
EC(DIL)= 98.1 X 11.11=	1090 UMHOS		
ALK. AS CACO3	274		
PH	7.48		

ACCURACY CHECK

		RANGE
ION	1.036	(.96 TO 1.04)
TDS	1.017	(.90 TO 1.10)
EC	0.956	(.95 TO 1.05)

RADIATION-PICOCURIES/LITER

GROSS ALPHA		+/-	
GROSS BETA		+/-	
RADIUM 226	50	+/-	1

MINOR AND TRACE CONSTITUENTS

ITEM	MG/L	ITEM	MG/L	ITEM	MG/L
ARSENIC(AS)	0.003	MANGANESE(MN)	0.01	VANADIUM(V)	
BARIUM(BA)		MERCURY(HG)	<0.0002	ZINC(ZN)	
CADMIUM(CD)	<0.0001	MOLY.(MO)	<0.1	BORON(B)	
CHROM.(CR)		NICKEL(NI)		AMMONIA-N	<0.1
COPPER(CU)		SELENIUM(SE)	<0.001		
IRON(FE)	0.02	SILVER(AG)			
LEAD(PB)	<0.001	URANIUM(U)	0.037		

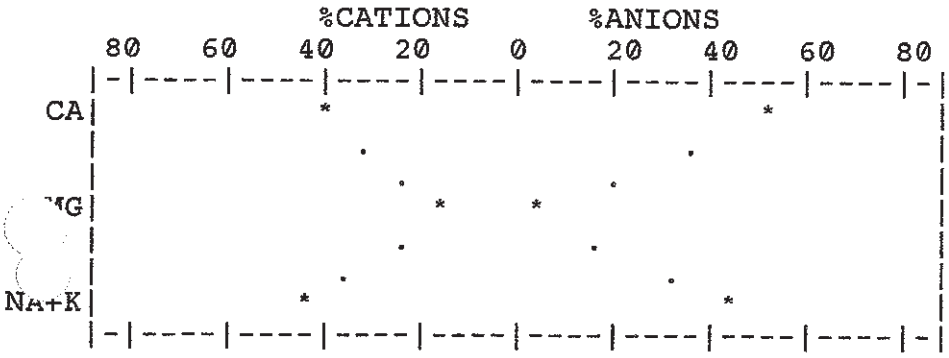

NOTE: QC Documnetation is on File at Jordan Labs in Corpus Christi, TX

CHECKED BY:

LAB.NO:M45-583

Client: Uranium Energy Corp
Project: Weesatche Baseline Sampling
Lab ID: C07080504-003
Client Sample ID: RBLD-2

Report Date: 08/27/07
Collection Date: 08/07/07 09:30
DateReceived: 08/08/07
Matrix: Aqueous

Analyses	Result	Units	Qualifiers	RL	MCL/ QCL	Method	Analysis Date / By
MAJOR IONS							
Alkalinity, Total as CaCO3	279	mg/L		1		A2320 B	08/09/07 23:00 / bas
Carbonate as CO3	ND	mg/L		1		A2320 B	08/09/07 23:00 / bas
Bicarbonate as HCO3	341	mg/L		1		A2320 B	08/09/07 23:00 / bas
Calcium	73.8	mg/L		0.5		E200.7	08/20/07 18:11 / ts
Chloride	164	mg/L		1		A4500-Cl B	08/13/07 14:03 / jl
Fluoride	0.5	mg/L		0.1		A4500-F C	08/14/07 10:36 / bas
Magnesium	16.9	mg/L		0.5		E200.7	08/20/07 18:11 / ts
Nitrogen, Ammonia as N	0.08	mg/L		0.05		A4500-NH3 G	08/10/07 12:41 / ljl
Nitrogen, Nitrate+Nitrite as N	ND	mg/L		0.1		E353.2	08/13/07 16:14 / ljl
Potassium	4.1	mg/L		0.5		E200.7	08/20/07 18:11 / ts
Silica	27.9	mg/L		0.1		E200.7	08/20/07 18:11 / ts
Sodium	110	mg/L		0.5		E200.7	08/20/07 18:11 / ts
Sulfate	12	mg/L		1		A4500-SO4 E	08/10/07 10:44 / zd
PHYSICAL PROPERTIES							
Conductivity	1020	umhos/cm		1.0		A2510 B	08/09/07 13:25 / ml
pH	7.59	s.u.		0.01		A4500-H B	08/09/07 13:25 / ml
Solids, Total Dissolved TDS @ 180 C	534	mg/L		10		A2540 C	08/09/07 15:53 / ml
METALS - DISSOLVED							
Arsenic	0.001	mg/L		0.001		E200.8	08/24/07 00:14 / bws
Cadmium	ND	mg/L		0.01		E200.8	08/24/07 00:14 / bws
Iron	ND	mg/L		0.03		E200.7	08/20/07 18:11 / ts
Lead	ND	mg/L		0.05		E200.7	08/20/07 18:11 / ts
Manganese	ND	mg/L		0.01		E200.8	08/24/07 00:14 / bws
Mercury	ND	mg/L		0.001		E200.8	08/24/07 00:14 / bws
Molybdenum	ND	mg/L		0.1		E200.8	08/24/07 00:14 / bws
Selenium	0.003	mg/L	D	0.002		E200.8	08/24/07 00:14 / bws
Uranium	0.0168	mg/L		0.0003		E200.8	08/24/07 00:14 / bws
RADIONUCLIDES - DISSOLVED							
Radium 226	207	pCi/L		0.2		E903.0	08/20/07 15:56 / crw
Radium 226 precision (±)	4.4	pCi/L				E903.0	08/20/07 15:56 / crw
DATA QUALITY							
A/C Balance (± 5)	-2.37	%				Calculation	08/24/07 11:54 / bws
Anions	10.5	meq/L				Calculation	08/24/07 11:54 / bws
Cations	9.98	meq/L				Calculation	08/24/07 11:54 / bws
Solids, Total Dissolved Calculated	577	mg/L				Calculation	08/24/07 11:54 / bws
TDS Balance (0.80 - 1.20)	0.930	dec. %				Calculation	08/24/07 11:54 / bws

Report Definitions:
RL - Analyte reporting limit.
QCL - Quality control limit.
D - RL increased due to sample matrix interference.
MCL - Maximum contaminant level.
ND - Not detected at the reporting limit.

9-28-07

ENERGY LABORATORIES, INC. * 2393 Salt Creek Hwy (82601) * PO Box 3258 * Casper, WY 82602
Toll Free 888.235.0515 * 307.235.0515 * FAX 307.234.1639 * casper@energylab.com * www.energylab.com

LABORATORY ANALYTICAL REPORT

Client: Freport McMoRan Copper and Gold Inc
Project: Weesatche Baseline Sampling
Lab ID: C07081043-001
Client Sample ID RBLD-3A

Report Date: 09/05/07
Collection Date: 08/16/07 11:30
DateReceived: 08/17/07
Matrix: Aqueous

Analyses	Result	Units	Qualifier	RL	MCL/ QCL	Method	Analysis Date / By
MAJOR IONS							
Alkalinity, Total as CaCO3	271	mg/L		1		A2320 B	08/22/07 14:35 / bas
Carbonate as CO3	ND	mg/L		1		A2320 B	08/22/07 14:35 / bas
Bicarbonate as HCO3	330	mg/L		1		A2320 B	08/22/07 14:35 / bas
Calcium	67.9	mg/L		0.5		E200.7	08/30/07 18:03 / cp
Chloride	158	mg/L		1		A4500-Cl B	08/21/07 09:43 / jl
Fluoride	0.5	mg/L		0.1		A4500-F C	08/21/07 15:22 / bas
Magnesium	14.3	mg/L		0.5		E200.7	08/30/07 18:03 / cp
Nitrogen, Ammonia as N	ND	mg/L		0.05		A4500-NH3 G	08/27/07 10:57 / jal
Nitrogen, Nitrate+Nitrite as N	ND	mg/L		0.1		E353.2	08/20/07 15:18 / ljl
Potassium	6.0	mg/L		0.5		E200.7	08/30/07 18:03 / cp
Silica	29.1	mg/L		0.1		E200.7	08/30/07 18:03 / cp
Sodium	105	mg/L	D	0.8		E200.7	08/30/07 18:03 / cp
Sulfate	6	mg/L		1		A4500-SO4 E	08/20/07 12:08 / zd
PHYSICAL PROPERTIES							
Conductivity	1040	umhos/cm		1.0		A2510 B	08/20/07 10:24 / bas
pH	7.54	s.u.		0.01		A4500-H B	08/20/07 10:24 / bas
Solids, Total Dissolved TDS @ 180 C	568	mg/L		10		A2540 C	08/20/07 14:22 / bas
METALS - DISSOLVED							
Arsenic	ND	mg/L		0.001		E200.8	09/01/07 20:10 / bws
Cadmium	ND	mg/L		0.01		E200.8	09/01/07 20:10 / bws
Iron	0.11	mg/L		0.03		E200.7	08/30/07 18:03 / cp
Lead	ND	mg/L		0.05		E200.8	09/01/07 20:10 / bws
Manganese	ND	mg/L		0.01		E200.8	09/01/07 20:10 / bws
Mercury	ND	mg/L		0.001		E200.8	09/01/07 20:10 / bws
Molybdenum	ND	mg/L		0.1		E200.8	09/01/07 20:10 / bws
Selenium	0.001	mg/L		0.001		E200.8	09/01/07 20:10 / bws
Uranium	0.0058	mg/L		0.0003		E200.8	09/01/07 20:10 / bws
RADIONUCLIDES - DISSOLVED							
Radium 226	539	pCi/L		0.2		E903.0	08/27/07 06:41 / crw
Radium 226 precision (±)	19.3	pCi/L				E903.0	08/27/07 06:41 / crw
DATA QUALITY							
A/C Balance (± 5)	-3.83	%				Calculation	09/04/07 11:55 / bws
Anions	10.0	meq/L				Calculation	09/04/07 11:55 / bws
Cations	9.28	meq/L				Calculation	09/04/07 11:55 / bws
Solids, Total Dissolved Calculated	549	mg/L				Calculation	09/04/07 11:55 / bws
TDS Balance (0.80 - 1.20)	1.03	dec. %				Calculation	09/04/07 11:55 / bws

Report Definitions:
RL - Analyte reporting limit.
QCL - Quality control limit.
D - RL increased due to sample matrix interference.
MCL - Maximum contaminant level.
ND - Not detected at the reporting limit.

GROUND WATER ANALYSIS REPORT-IN SITU MINING-URANIUM

COMPANY: URANIUM ENERGY CORPORATION REPORT DATE: March 20, 2007
IDENTIFICATION: RBLD-5
2-21-07
LABORATORY: JORDAN LABORATORIES, INC.

MAJOR AND SECONDARY CONSTITUENTS

ITEM	MG/L	EPM	CONDUCTANCE	%EPM
CALCIUM(CA)	73	3.64	189.28	35.48
MAGNESIUM(MG)	18	1.48	68.97	14.42
SODIUM(NA)	114	4.96	242.54	48.34
POTASSIUM(K)	7.1	0.18	12.96	1.75
	TOTAL CATION	10.26		
CARBONATE(CO3)	0	0.00	0.00	0.00
BICARBONATE(HCO3)	295	4.83	210.59	48.99
SULFATE(SO4)	19	0.40	29.56	4.06
CHLORIDE(CL)	164	4.63	351.42	46.96
NITRATE(NO3-N)	<0.01			
FLUORIDE(F)	0.39	TOTAL	1105.32	
SILICA(SIO2)	30			
	TOTAL ANION	9.86		
TOTAL ION	720			

TDS(180 C)	575
TOT ION-0.5 HCO3=	573
EC(25 C)	998 UMHOS
EC(DIL)= 98.1 X 11.11=	1090 UMHOS
ALK. AS CACO3	242
PH	7.49

ACCURACY CHECK

		RANGE
ION	1.041	(.96 TO 1.04)
TDS	1.004	(.90 TO 1.10)
EC	0.986	(.95 TO 1.05)

RADIATION-PICOCURIES/LITER

GROSS ALPHA		+/-
GROSS BETA		+/-
RADIUM 226	442	+/- 2

MINOR AND TRACE CONSTITUENTS

ITEM	MG/L	ITEM	MG/L	ITEM	MG/L
ARSENIC(AS)	0.010	MANGANESE(MN)	0.01	VANADIUM(V)	
BARIUM(BA)		MERCURY(HG)	<0.0002	ZINC(ZN)	
CADMIUM(CD)	<0.0001	MOLY.(MO)	<0.1	BORON(B)	
CHROM.(CR)		NICKEL(NI)		AMMONIA-N	<0.1
COPPER(CU)		SELENIUM(SE)	<0.001		
IRON(FE)	0.01	SILVER(AG)			
LEAD(PB)	0.001	URANIUM(U)	0.035		

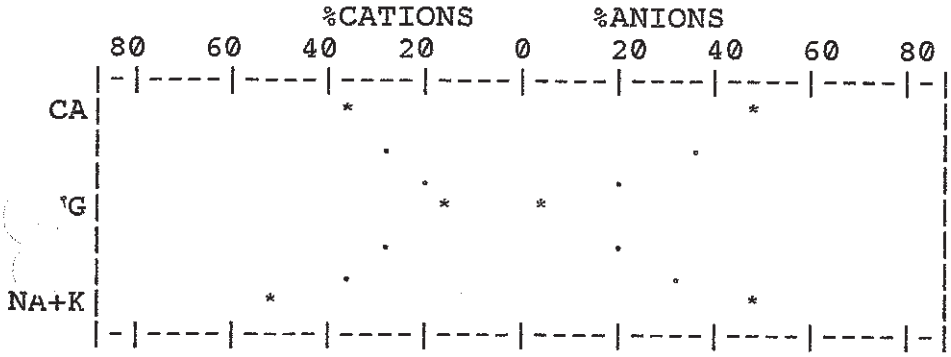

NOTE: QC Documnetation is on File at Jordan Labs in Corpus Christi, TX

CHECKED BY:

LAB.NO:M45-586

GROUND WATER ANALYSIS REPORT-IN SITU MINING-URANIUM

COMPANY: URANIUM ENERGY CORPORATION REPORT DATE: March 20, 2007
IDENTIFICATION: RBL~~Ø~~-6 RBLD-6 cont
2-21-07
LABORATORY: JORDAN LABORATORIES, INC.

MAJOR AND SECONDARY CONSTITUENTS

ITEM	MG/L	EPM	CONDUCTANCE	%EPM
CALCIUM(CA)	90	4.49	233.48	42.28
MAGNESIUM(MG)	17	1.40	65.24	13.18
SODIUM(NA)	106	4.61	225.43	43.41
POTASSIUM(K)	4.7	0.12	8.64	1.13
	TOTAL CATION	10.62		
CARBONATE(CO3)	0	0.00	0.00	0.00
BICARBONATE(HCO3)	318	5.21	227.16	50.98
SULFATE(SO4)	13	0.27	19.95	2.64
CHLORIDE(CL)	168	4.74	359.77	46.38
NITRATE(NO3-N)	<0.01			
FLUORIDE(F)	0.51	TOTAL	1139.66	
SILICA(SIO2)	34			
	TOTAL ANION	10.22		
TOTAL ION	751			

TDS(180 C)	623
TOT ION-0.5 HCO3=	592
EC(25 C)	978 UMHOS
EC(DIL)= 99.9 X 11.11=	1110 UMHOS
ALK. AS CACO3	261
PH	7.57

ACCURACY CHECK

		RANGE
ION	1.039	(.96 TO 1.04)
TDS	1.052	(.90 TO 1.10)
EC	0.974	(.95 TO 1.05)

RADIATION-PICOCURIES/LITER

GROSS ALPHA		+/-
GROSS BETA		+/-
RADIUM 226	1040	+/- 10

MINOR AND TRACE CONSTITUENTS

ITEM	MG/L	ITEM	MG/L	ITEM	MG/L
ARSENIC(AS)	0.002	MANGANESE(MN)	0.01	VANADIUM(V)	
BARIUM(BA)		MERCURY(HG)	<0.0002	ZINC(ZN)	
CADMIUM(CD)	0.0001	MOLY.(MO)	<0.1	BORON(B)	
CHROM.(CR)		NICKEL(NI)		AMMONIA-N	<0.1
COPPER(CU)		SELENIUM(SE)	<0.001		
IRON(FE)	0.01	SILVER(AG)			
LEAD(PB)	0.001	URANIUM(U)	0.019		

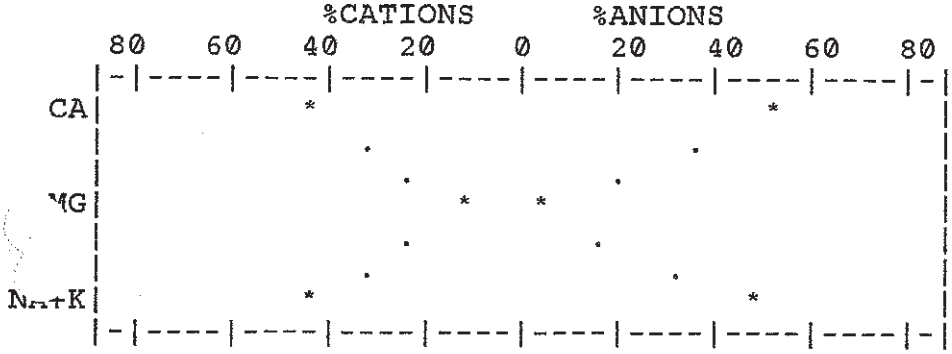

NOTE: QC Documnetation is on File at Jordan Labs in Corpus Christi, TX

CHECKED BY:

CJC

LAB.NO:M45-587

UEC's Rig Supply Well

ENERGY LABORATORIES, INC. * 2393 Salt Creek Highway (82601) * PO Box 3258 * Casper, WY 82602

LABORATORY ANALYTICAL REPORT

Client: Uranium Energy Corp
Project: Weesatche
Lab ID: C07031058-001
Client Sample ID: Jacobs WW

[redacted]

Report Date: 04/10/07
Collection Date: 03/20/07
DateReceived: 03/21/07
Matrix: Aqueous

Analyses	Result	Units	Qualifier	RL	MCL/ QCL	Method	Analysis Date / By
MAJOR IONS							
Alkalinity, Total as CaCO3	296	mg/L		1		A2320 B	03/23/07 10:35 / jaj
Carbonate as CO3	ND	mg/L		1		A2320 B	03/23/07 10:35 / jaj
Bicarbonate as HCO3	361	mg/L		1		A2320 B	03/23/07 10:35 / jaj
Calcium	50.6	mg/L		0.5		E200.7	03/28/07 17:20 / ts
Chloride	146	mg/L		1		A4500-Cl B	03/23/07 10:59 / jl
Fluoride	0.5	mg/L		0.1		A4500-F C	03/23/07 09:42 / jaj
Magnesium	13.4	mg/L		0.5		E200.7	03/28/07 17:20 / ts
Nitrogen, Ammonia as N	ND	mg/L		0.05		A4500-NH3 G	03/26/07 16:16 / jal
Nitrogen, Nitrate+Nitrite as N	ND	mg/L		0.1		E353.2	03/23/07 14:12 / jal
Potassium	4.6	mg/L		0.5		E200.7	03/28/07 17:20 / ts
Silica	21.7	mg/L		0.1		E200.7	03/28/07 17:20 / ts
Sodium	136	mg/L		0.5		E200.7	03/28/07 17:20 / ts
Sulfate	19	mg/L		1		A4500-SO4 E	03/23/07 12:25 / ljl
PHYSICAL PROPERTIES							
Conductivity	997	umhos/cm		1.0		A2510 B	03/23/07 12:16 / jaj
pH	7.48	s.u.		0.01		A4500-H B	03/23/07 12:16 / jaj
Solids, Total Dissolved TDS @ 180 C	504	mg/L		10		A2540 C	03/23/07 16:24 / jaj
METALS - DISSOLVED							
Arsenic	ND	mg/L		0.001		E200.8	03/30/07 00:14 / bas
Cadmium	ND	mg/L		0.01		E200.8	03/30/07 00:14 / bas
Iron	ND	mg/L		0.03		E200.7	03/28/07 17:20 / ts
Lead	ND	mg/L		0.05		E200.8	03/30/07 00:14 / bas
Manganese	0.02	mg/L		0.01		E200.7	03/28/07 17:20 / ts
Mercury	ND	mg/L		0.001		E200.8	03/30/07 00:14 / bas
Molybdenum	ND	mg/L		0.1		E200.8	03/30/07 00:14 / bas
Selenium	ND	mg/L		0.001		E200.8	03/30/07 00:14 / bas
Uranium	0.0005	mg/L		0.0003		E200.8	03/30/07 00:14 / bas
RADIONUCLIDES - DISSOLVED							
Radium 226	2.4	pCi/L		0.2		E903.0	04/03/07 10:29 / crw
Radium 226 precision (±)	0.6	pCi/L				E903.0	04/03/07 10:29 / crw
DATA QUALITY							
A/C Balance (± 5)	-3.78	%				Calculation	04/02/07 13:11 / bws
Anions	10.4	meq/L				Calculation	04/02/07 13:11 / bws
Cations	9.68	meq/L				Calculation	04/02/07 13:11 / bws
Solids, Total Dissolved Calculated	569	mg/L				Calculation	04/02/07 13:11 / bws
TDS Balance (0.80 - 1.20)	0.890	dec. %				Calculation	04/02/07 13:11 / bws

Report Definitions:
RL - Analyte reporting limit.
QCL - Quality control limit.
MCL - Maximum contaminant level.
ND - Not detected at the reporting limit.

GROUND WATER ANALYSIS REPORT-IN SITU MINING ---

COMPANY: URANIUM ENERGY CORPARATION REPORT DATE: December 5, 2006
IDENTIFICATION: Jacob's Well - C[redacted]
1115 10-25-06
LABORATORY: JORDAN LABORATORIES, INC.

MAJOR AND SECONDARY CONSTITUENTS

ITEM	MG/L	EPM	CONDUCTANCE	%EPM
CALCIUM(CA)	81	4.04	210.08	37.58
MAGNESIUM(MG)	17	1.40	65.24	13.02
SODIUM(NA)	120	5.22	255.26	48.56
POTASSIUM(K)	3.7	0.09	6.48	0.84
TOTAL CATION		10.75		
CARBONATE(CO3)	0	0.00	0.00	0.00
BICARBONATE(HCO3)	326	5.34	232.82	52.25
SULFATE(SO4)	11	0.23	17.00	2.25
CHLORIDE(CL)	165	4.65	352.94	45.50
NITRATE(NO3-N)	<0.01			
FLUORIDE(F)	0.44		TOTAL 1139.81	
SILICA(SIO2)	28			
TOTAL ANION		10.22		
TOTAL ION	752			

TDS(180 C)	573
TOT ION-0.5 HCO3=	589
EC(25 C)	972 UMHOS
EC(DIL)=105.0 X 10.0 =	1050 UMHOS
ALK. AS CACO3	267
PH	7.52

ACCURACY CHECK

		RANGE
ION	1.052	(.96 TO 1.04)
TDS	0.973	(.90 TO 1.10)
EC	0.921	(.95 TO 1.05)

RADIATION-PICOCURIES/LITER

GROSS ALPHA		+/-	
GROSS BETA		+/-	
RADIUM 226	10	+/-	1

MINOR AND TRACE CONSTITUENTS

ITEM	MG/L	ITEM	MG/L	ITEM	MG/L
ARSENIC(AS)	<0.001	MANGANESE(MN)	0.01	VANADIUM(V)	
BARIUM(BA)		MERCURY(HG)	<0.0002	ZINC(ZN)	
CADMIUM(CD)	0.0001	MOLY.(MO)	<0.1	BORON(B)	
CHROM.(CR)		NICKEL(NI)		AMMONIA-N	<0.1
COPPER(CU)		SELENIUM(SE)	<0.001		
IRON(FE)	<0.01	SILVER(AG)			
LEAD(PB)	0.001	URANIUM(U)	<0.001		

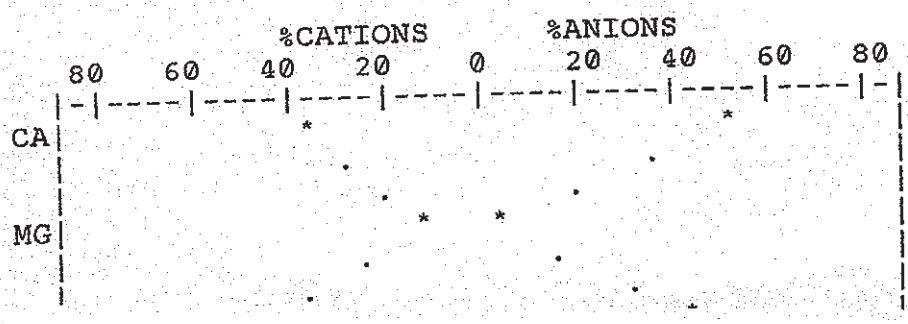

NOTE: QC Documnetation is on File at Jordan Labs in Corpus Christi, TX

CHECKED BY:

Appendix B

Well Logs/Completion Reports

Well Logs

Completion Reports

Well No.	RBLA-1	**Date:**	June 13, 2007
Lease	Schrade	**Field Supervisor:**	Mike O'Leary
Location	Weesatche	**Drilling Contractor:**	MHC X-Plorattion

Hole Dia:	7.875	Packer Type:	K-Packer		
Casing Dia:	5.0"	Liner Dia.:	3"		
Underream Dia.	8.0"	Screen Type:	R	Slot Size:	0.01
Notes:					

Top of Casing 0

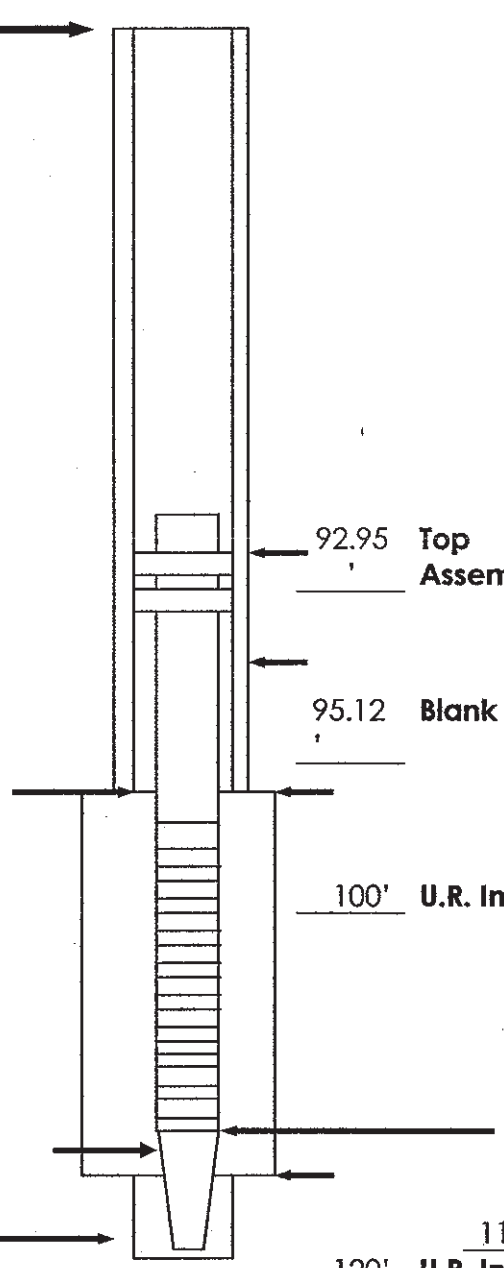

92.95' **Top Assembly** 2.17 **Ft.**

95.12' **Blank** 4.88 **Ft.**

Casing T.D 97'

100' **U.R. Interval/Top of Screen**

Lgth of Screen 8 **ft** 9

Sand Catcher 8.0 ft

119.46 **Bottom of screen**

120' **U.R. Interval** 20 ft

Drilled T.D. 130

Well No.	RBLA-2	**Date:**	June 12, 2007
Lease	Abrameit	**Field Supervisor:**	Mike O'Leary
Location	Weesatche	**Drilling Contractor:**	MHC X-Plorattion

Hole Dia:	7.875	Packer Type:	K-Packer (2)		
Casing Dia:	5.0"	Liner Dia.:	3"		
Underream Dia.	8.0"	Screen Type:	R	Slot Size:	0.01
Notes:					

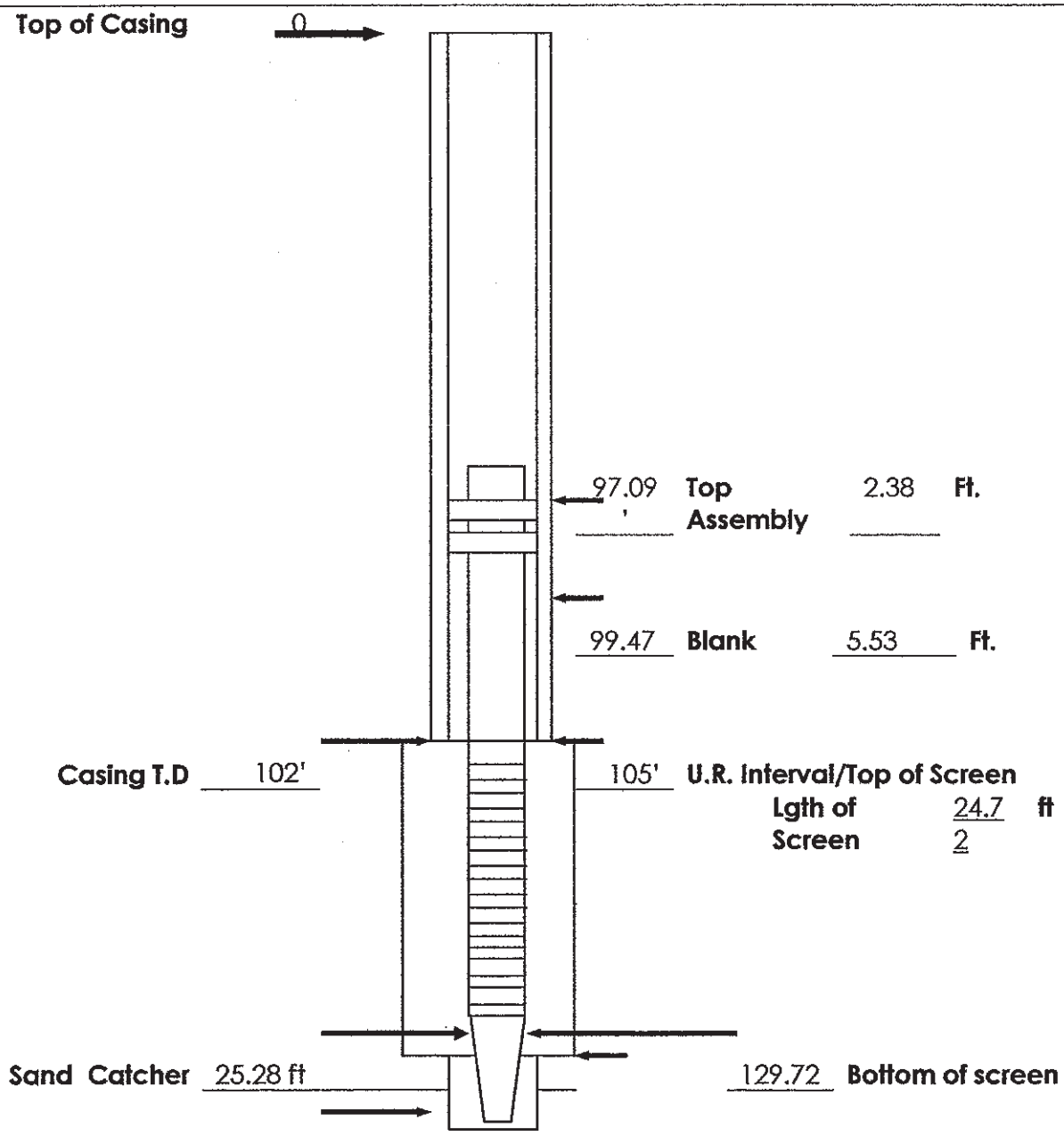

130' **U.R. Interval** 20 ft

Drilled T.D. 150'

RBLA-2

Well No.	RBLA-3	**Date:**	Feb. 13, 2007
Lease	Abrameit	**Field Supervisor:**	Mike O'Leary
Location	Weesatche	**Drilling Contractor:**	MHC X-Plorattion

Hole Dia:	7.875	Packer Type:	K-Packer (2)		
Casing Dia:	5.0"	Liner Dia.:	3"		
Underream Dia.	8.0"	Screen Type:	R	Slot Size:	0.01
Notes:					

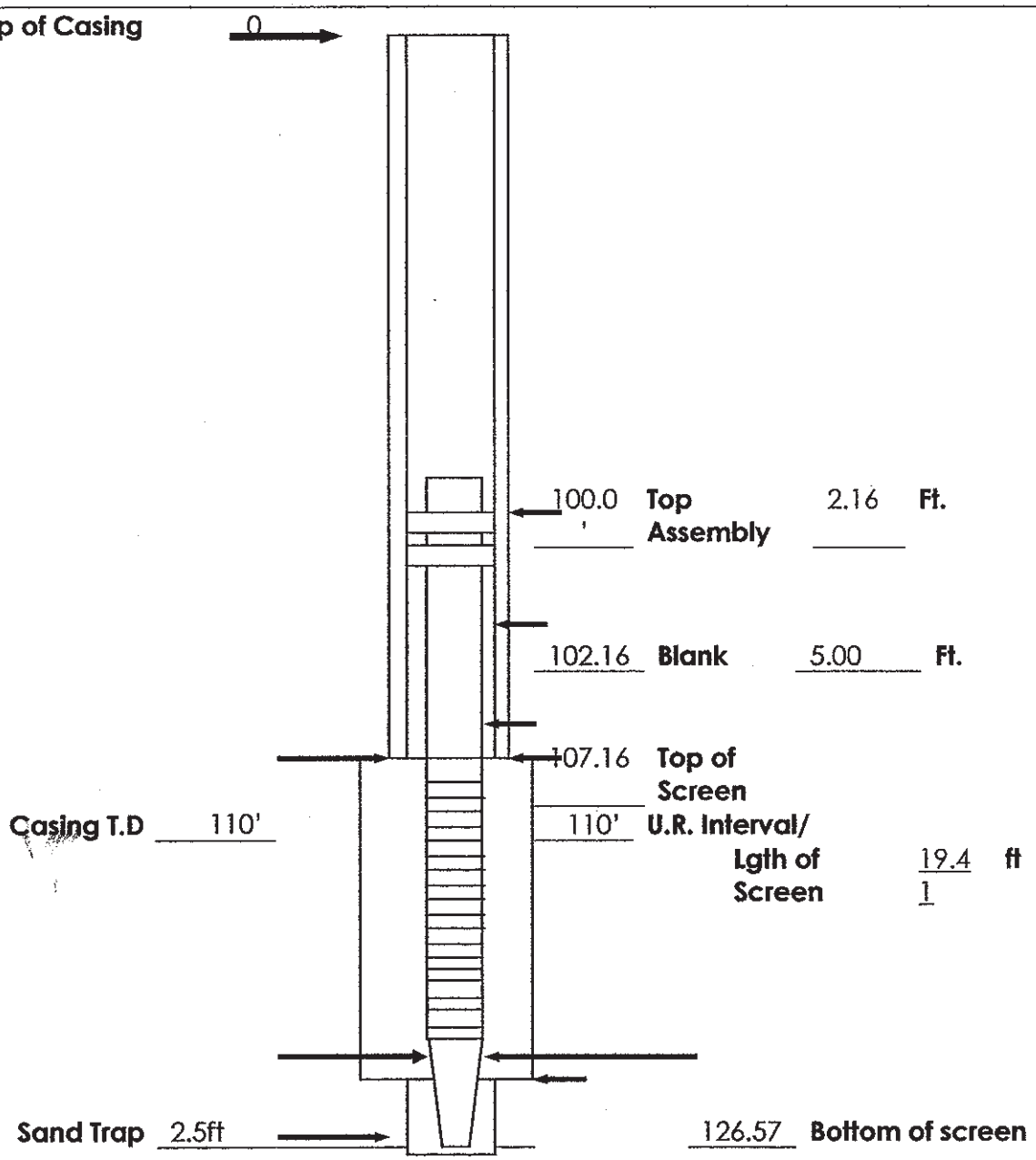

130' **U.R. Interval** 20 ft

Drilled T.D. 135'

Well No.	RBLA-4	**Date:**	June 21, 2007
Lease	Abrameit	**Field Supervisor:**	Mike O'Leary
Location	Weesatche	**Drilling Contractor:**	MHC X-Plorattion

Hole Dia:	7.875	Packer Type:	K-Packer (2)		
Casing Dia:	5.0"	Liner Dia.:	3"		
Underream Dia.	8.0"	Screen Type:	R	Slot Size:	0.01
Notes:					

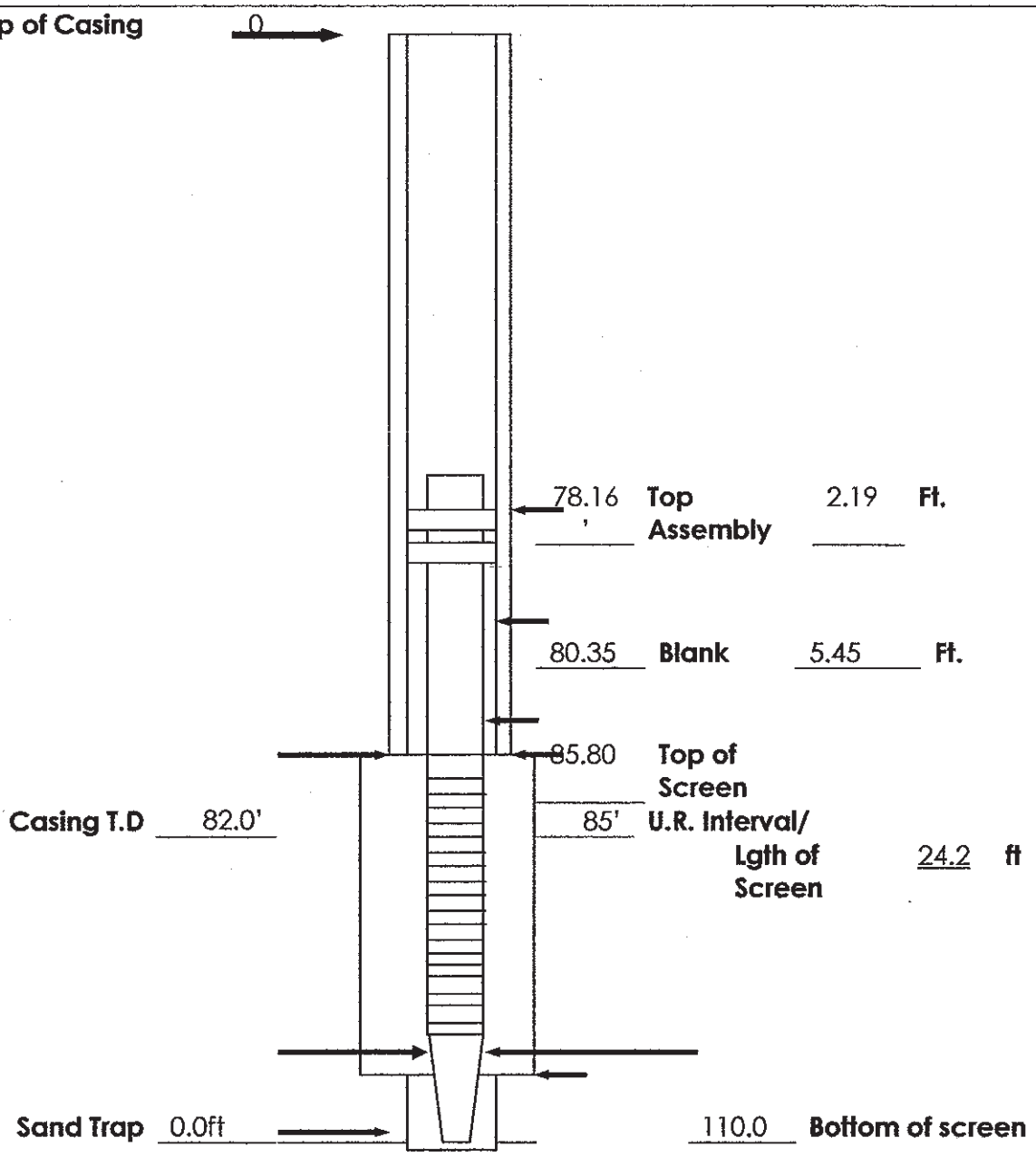

110' **U.R. Interval** 25 ft

Drilled T.D. 150'

Well No.	RBLA-5	**Date:**	June 19, 2007
Lease	Abrameit	**Field Supervisor:**	Mike O'Leary
Location	Weesatche	**Drilling Contractor:**	MHC X-Plorattion

Hole Dia:	7.875	Packer Type:	K-Packer (2)		
Casing Dia:	5.0"	Liner Dia.:	3"		
Underream Dia.	8.0"	Screen Type:	R	Slot Size:	0.01
Notes:					

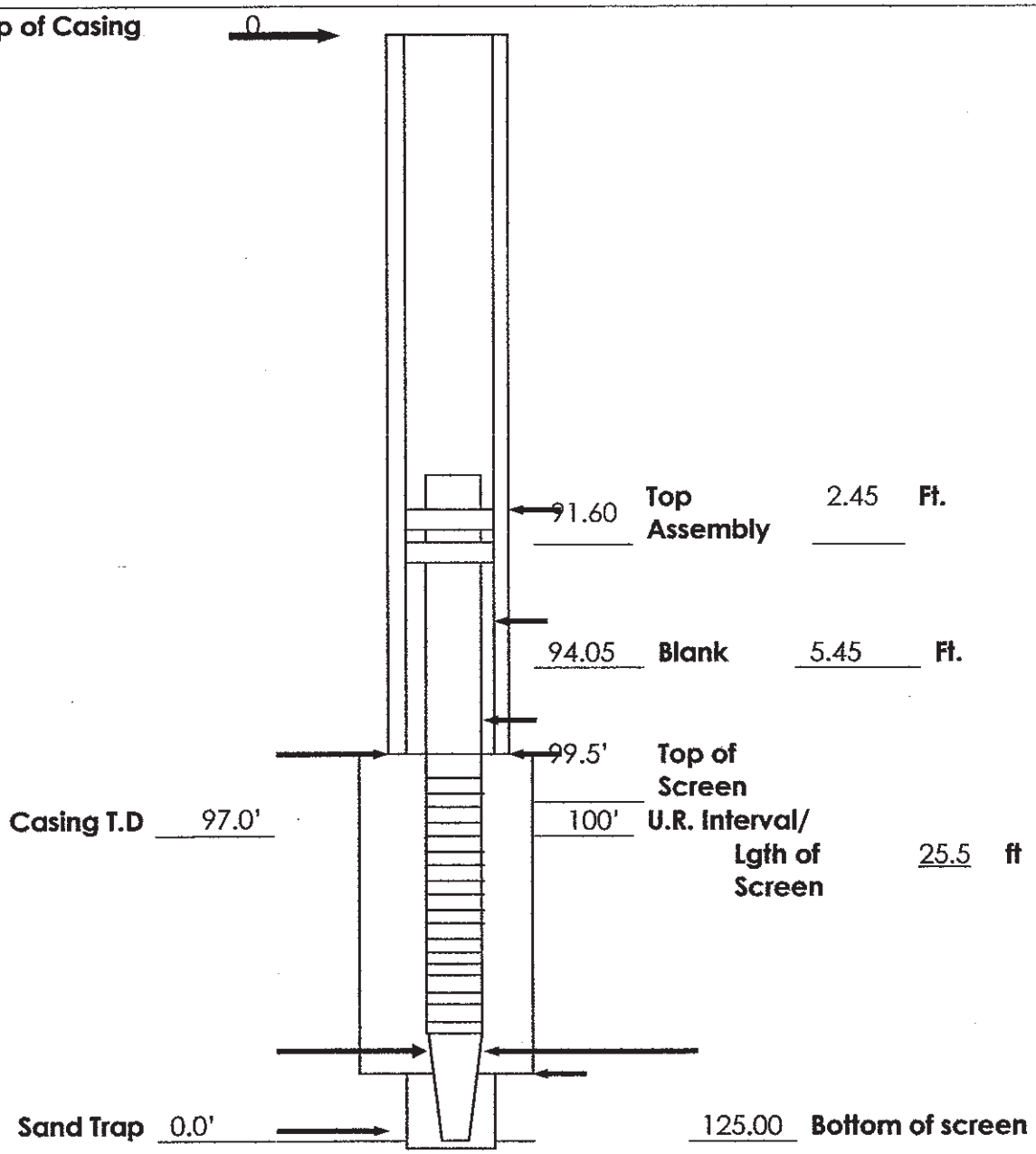

125' **U.R. Interval** 20 ft

Drilled T.D. 130'

RBLA-5

Well No.	RBLB-1	**Date:**	June 14, 2007
Lease	Abrameit	**Field Supervisor:**	Mike O'Leary
Location	Weesatche	**Drilling Contractor:**	MHC X-Plorattion

Hole Dia:	7.875	Packer Type:	K-Packer (2)		
Casing Dia:	5.0"	Liner Dia.:	3"		
Underream Dia.	8.0"	Screen Type:	R	Slot Size:	0.01
Notes:					

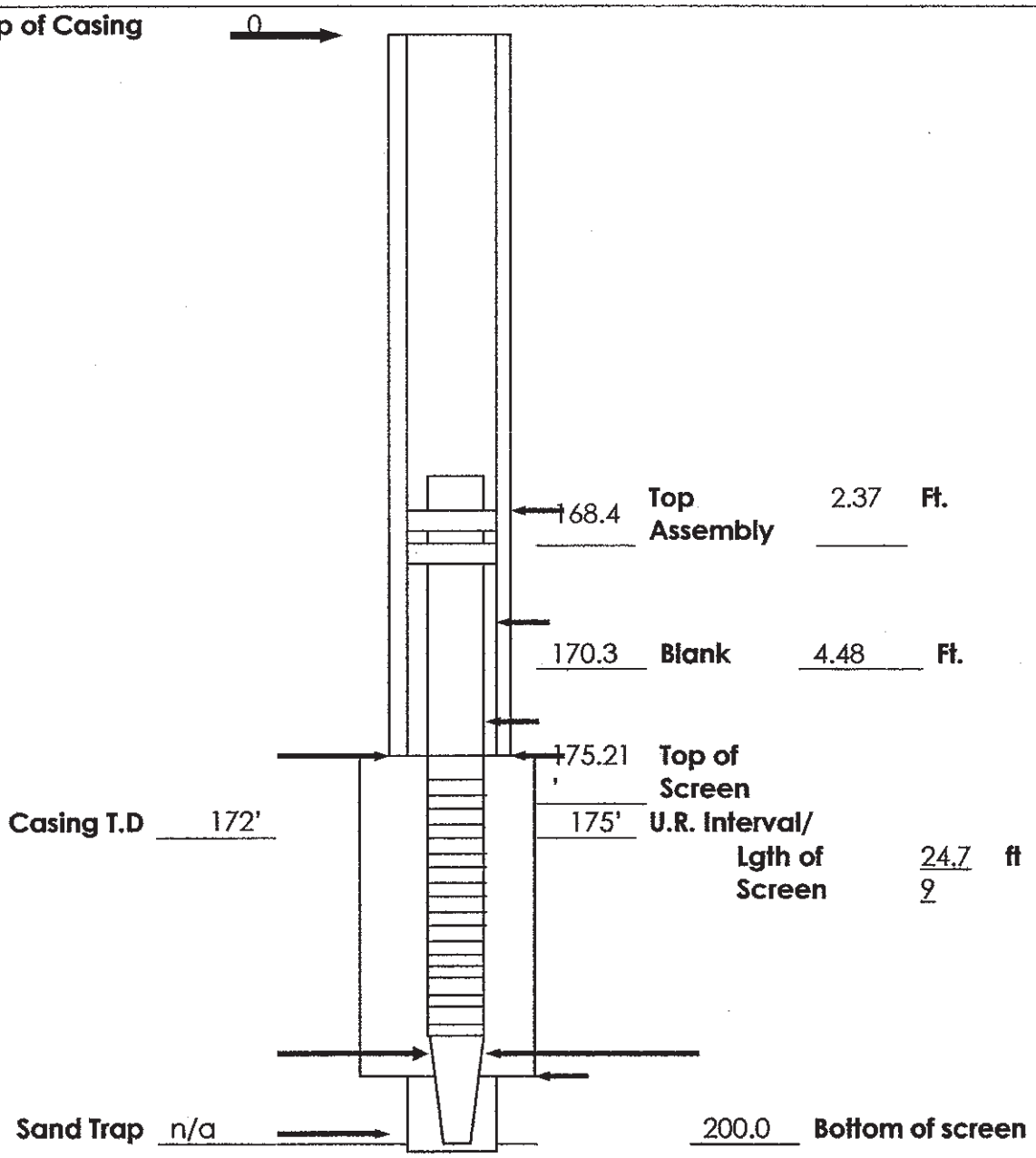

200' **U.R. Interval** 25 ft

Drilled T.D. 205'

RBLB-1

Well No.	RBLB-2	**Date:**	February 14, 2007
Lease	Abrameit	**Field Supervisor:**	Mike O'Leary
Location	Weesatche	**Drilling Contractor:**	MHC X-Plorattion

Hole Dia:	7.875	Packer Type:	K-Packer (2)		
Casing Dia:	5.0"	Liner Dia.:	3"		
Underream Dia.	8.0"	Screen Type:	R	Slot Size:	0.01
Notes:					

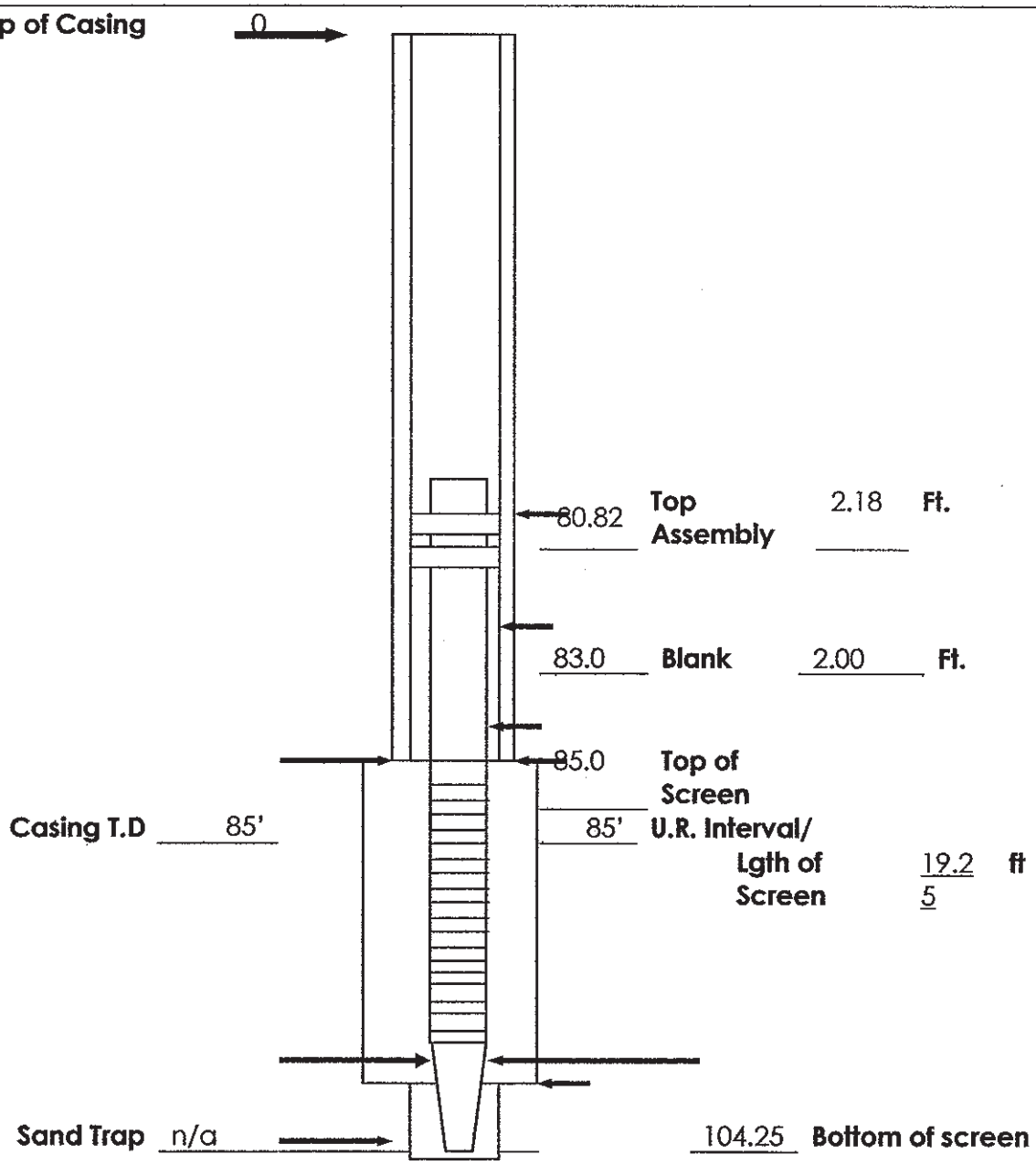

105' **U.R. Interval** 25 ft

Drilled T.D. 110'

RBLB-2

Well No.	RBLB-3	**Date:**	June 18, 2007
Lease	Abrameit	**Field Supervisor:**	Mike O'Leary
Location	Weesatche	**Drilling Contractor:**	MHC X-Plorattion

Hole Dia:	7.875	Packer Type:	K-Packer (2)		
Casing Dia:	5.0"	Liner Dia.:	3"		
Underream Dia.	8.0"	Screen Type:	R	Slot Size:	0.01
Notes:					

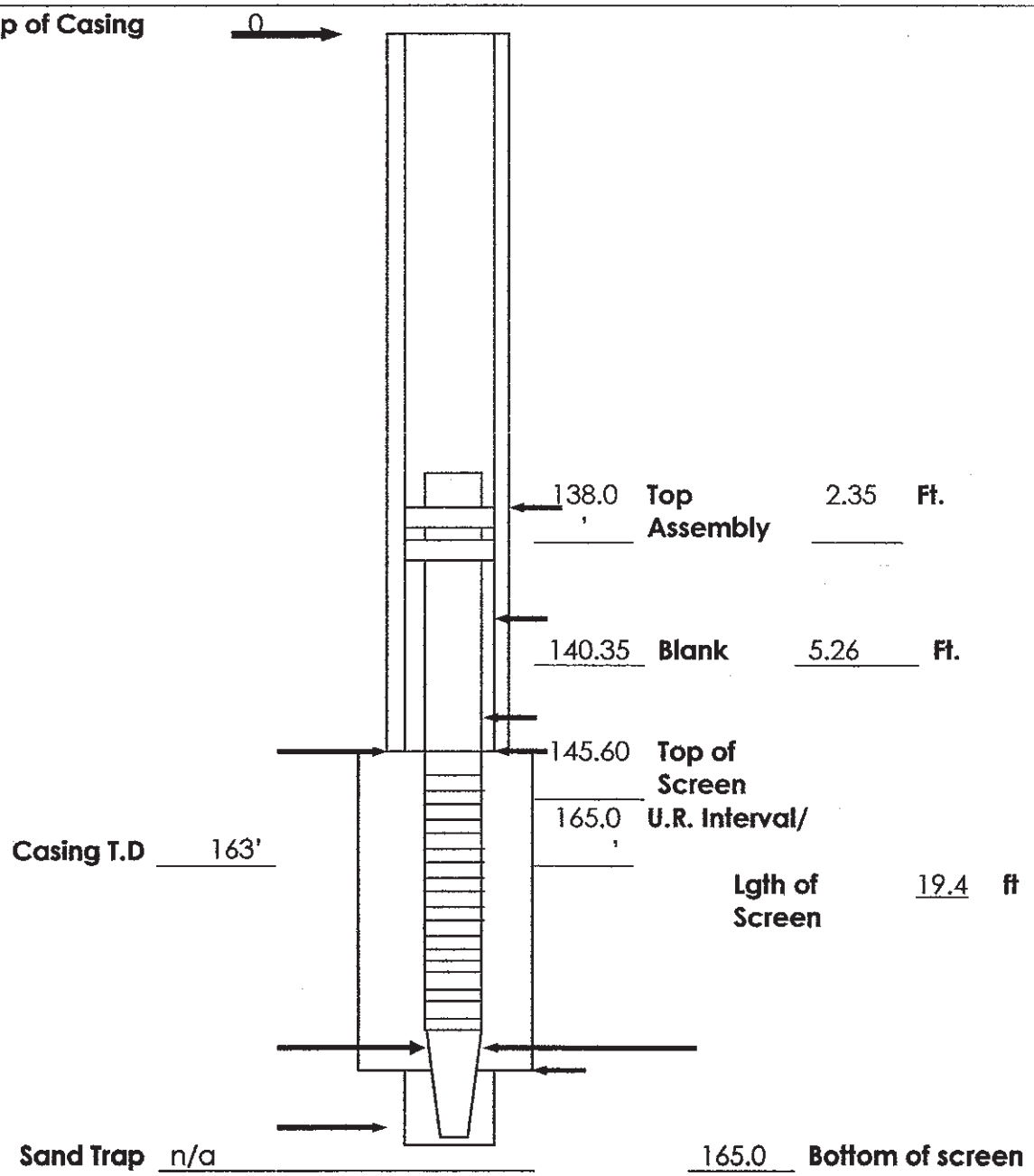

185' **U.R. Interval** 25 ft

Drilled T.D. 190'

RBLB-3

Well No.	RBLB-4	**Date:**	June 14, 2007
Lease	Schrade	**Field Supervisor:**	Mike O'Leary
Location	Weesatche	**Drilling Contractor:**	MHC X-Plorattion

Hole Dia:	7.875	Packer Type:	K-Packer (2)		
Casing Dia:	5.0"	Liner Dia.:	3"		
Underream Dia.	8.0"	Screen Type:	R	Slot Size:	0.01
Notes:					

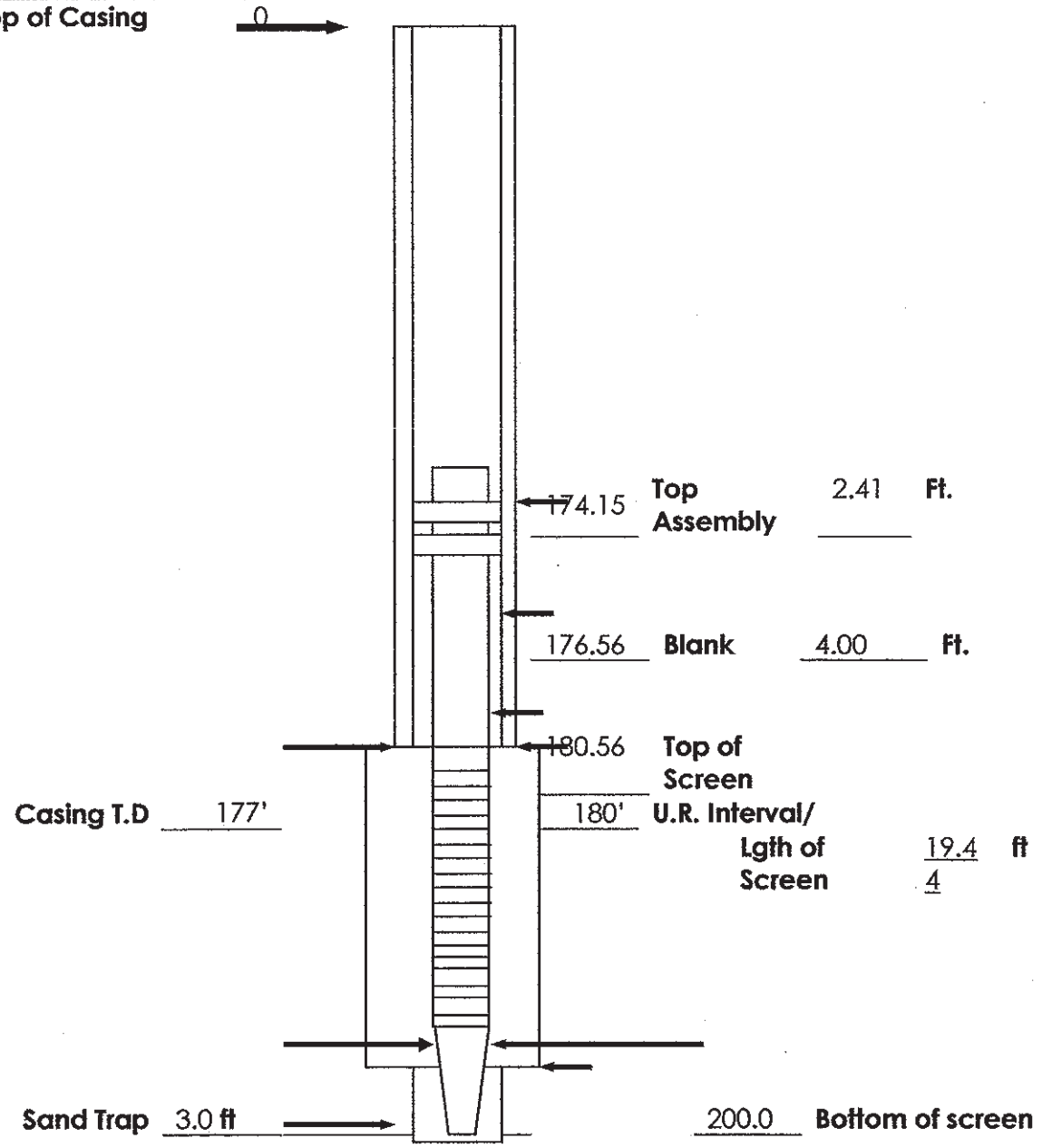

200' **U.R. Interval** 20 ft

Drilled T.D. 205'

RBLB-4

Well No.	RBLB-5	**Date:**	June 15, 2007
Lease	Abrameit	**Field Supervisor:**	Mike O'Leary
Location	Weesatche	**Drilling Contractor:**	MHC X-Plorattion

Hole Dia:	7.875	Packer Type:	K-Packer (2)		
Casing Dia:	5.0"	Liner Dia.:	3"		
Underream Dia.	8.0"	Screen Type:	R	Slot Size:	0.01
Notes:					

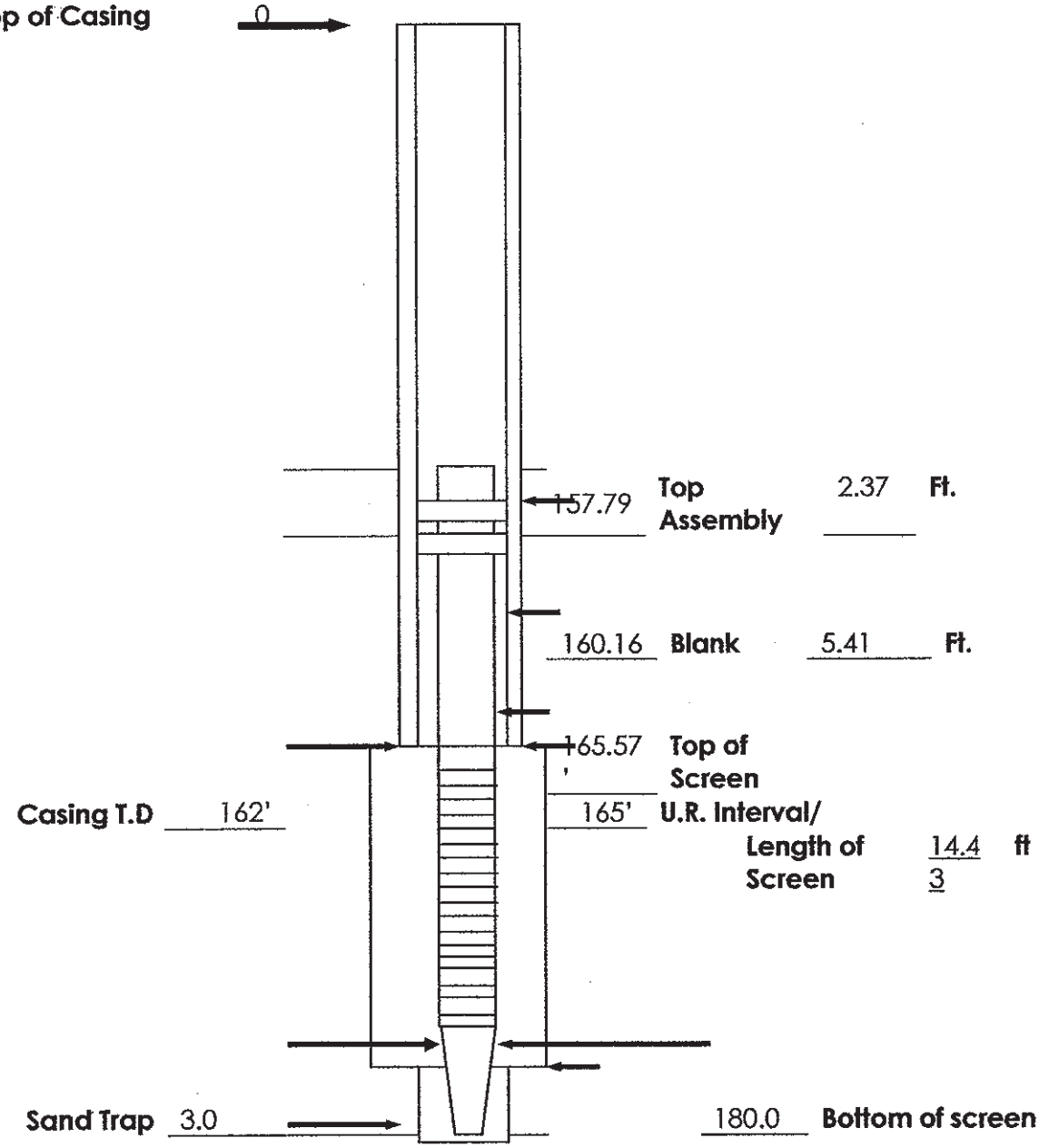

180' **U.R. Interval** 15 ft

Drilled T.D. 185'

RBLB-5

Well No.	RBLC-1	**Date:**	June 19, 2007
Lease	Stanford	**Field Supervisor:**	Mike O'Leary
Location	Weesatche	**Drilling Contractor:**	MHC X-Plorattion

Hole Dia:	7.875	Packer Type:	K-Packer (2)		
Casing Dia:	5.0"	Liner Dia.:	3"		
Underream Dia.	8.0"	Screen Type:	R	Slot Size:	0.01
Notes:					

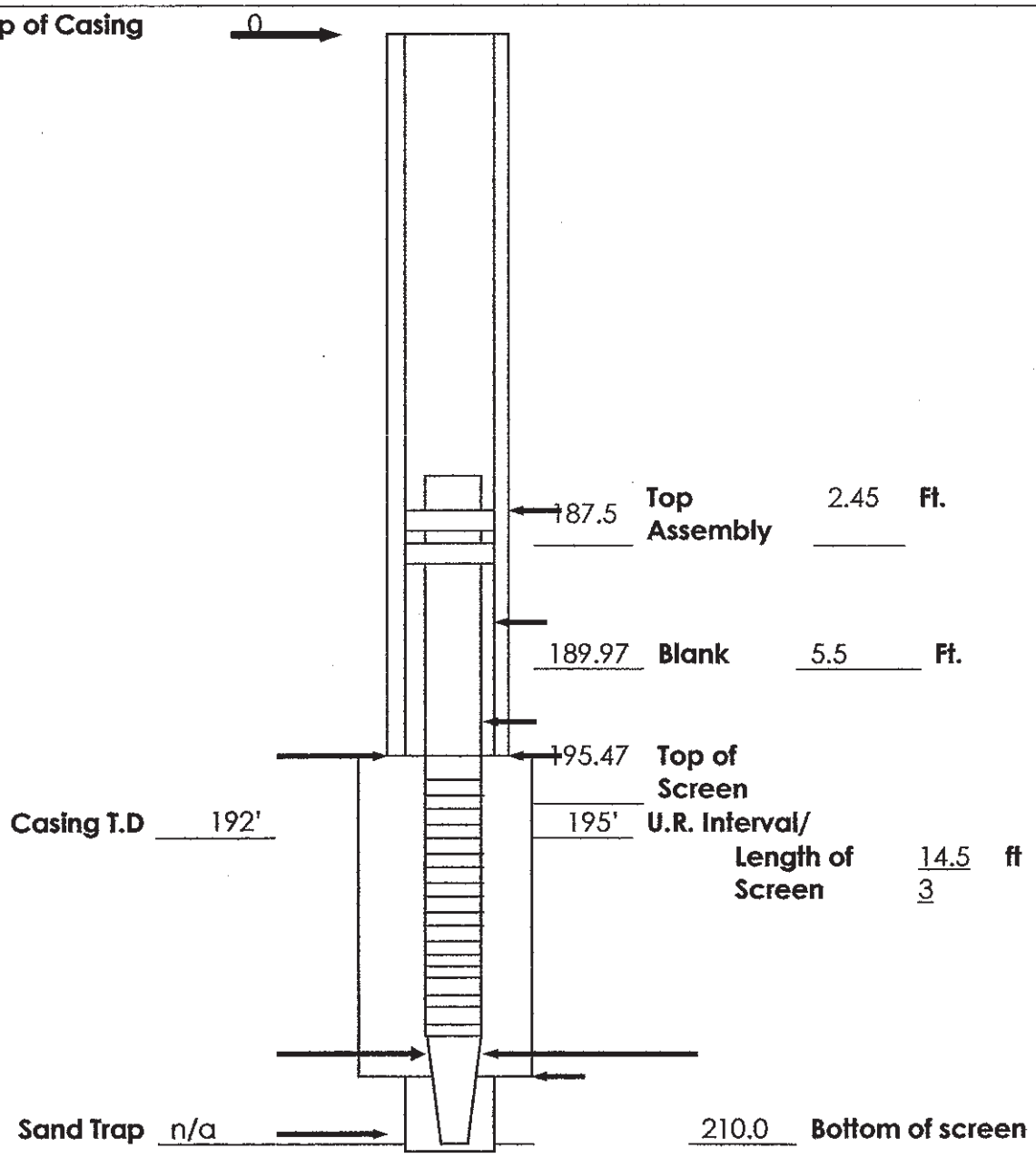

210' **U.R. Interval** 25 ft

Drilled T.D. 215'

RBLC-1

Well No.	RBLC-2	**Date:**	June 14, 2007
Lease	Braquet	**Field Supervisor:**	Mike O'Leary
Location	Weesatche	**Drilling Contractor:**	MHC X-Plorattion

Hole Dia:	7.875	Packer Type:	K-Packer (2)		
Casing Dia:	5.0"	Liner Dia.:	3"		
Underream Dia.	8.0"	Screen Type:	R	Slot Size:	0.01
Notes:					

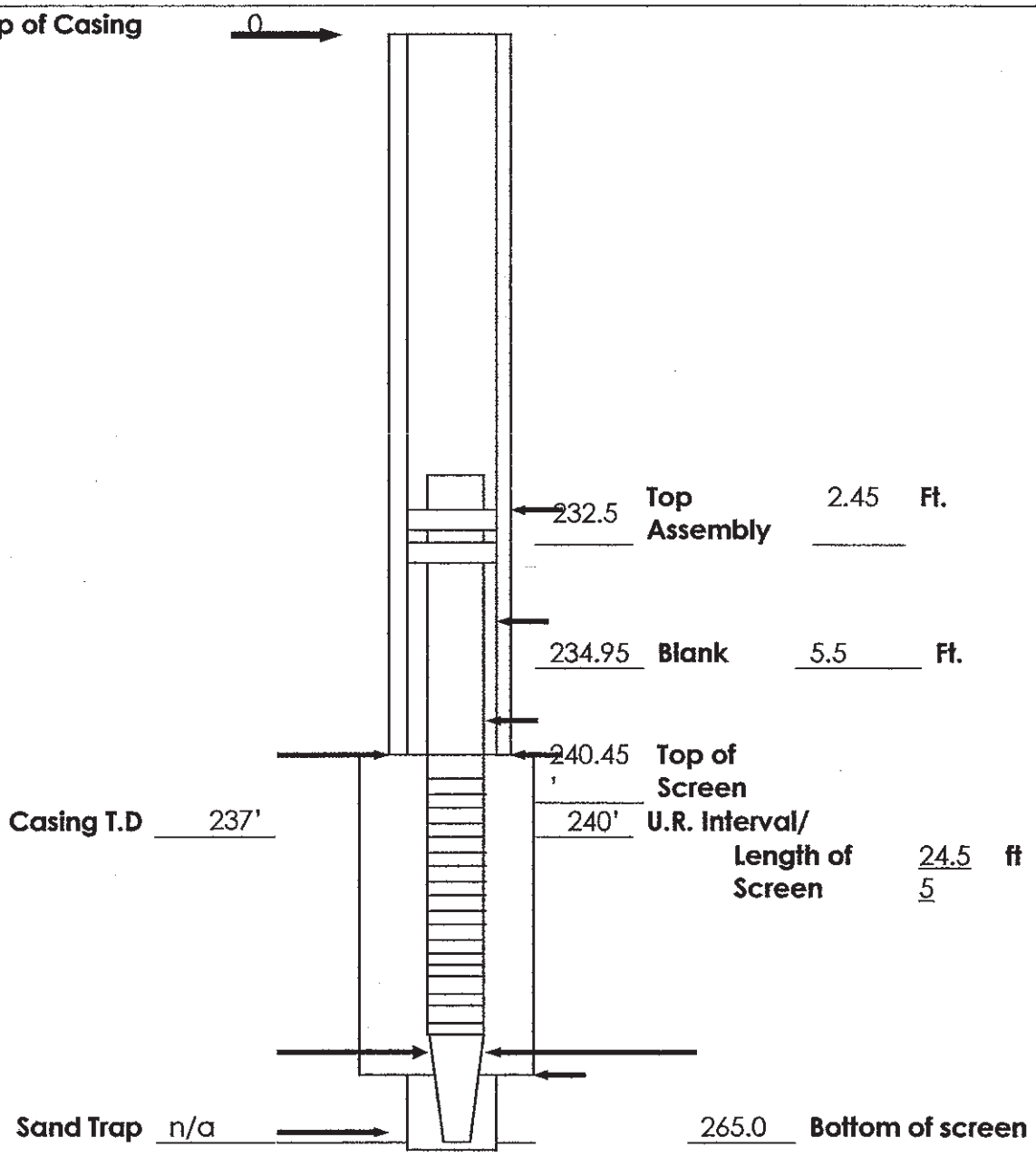

265' **U.R. Interval** 25 ft

Drilled T.D. 270'

RBLC-2

Well No.	RBLC-3	**Date:**	June 14, 2007
Lease	Braquet	**Field Supervisor:**	Mike O'Leary
Location	Weesatche	**Drilling Contractor:**	MHC X-Plorattion

Hole Dia:	7.875	Packer Type:	K-Packer (2)		
Casing Dia:	5.0"	Liner Dia.:	3"		
Underream Dia.	8.0"	Screen Type:	R	Slot Size:	0.01
Notes:					

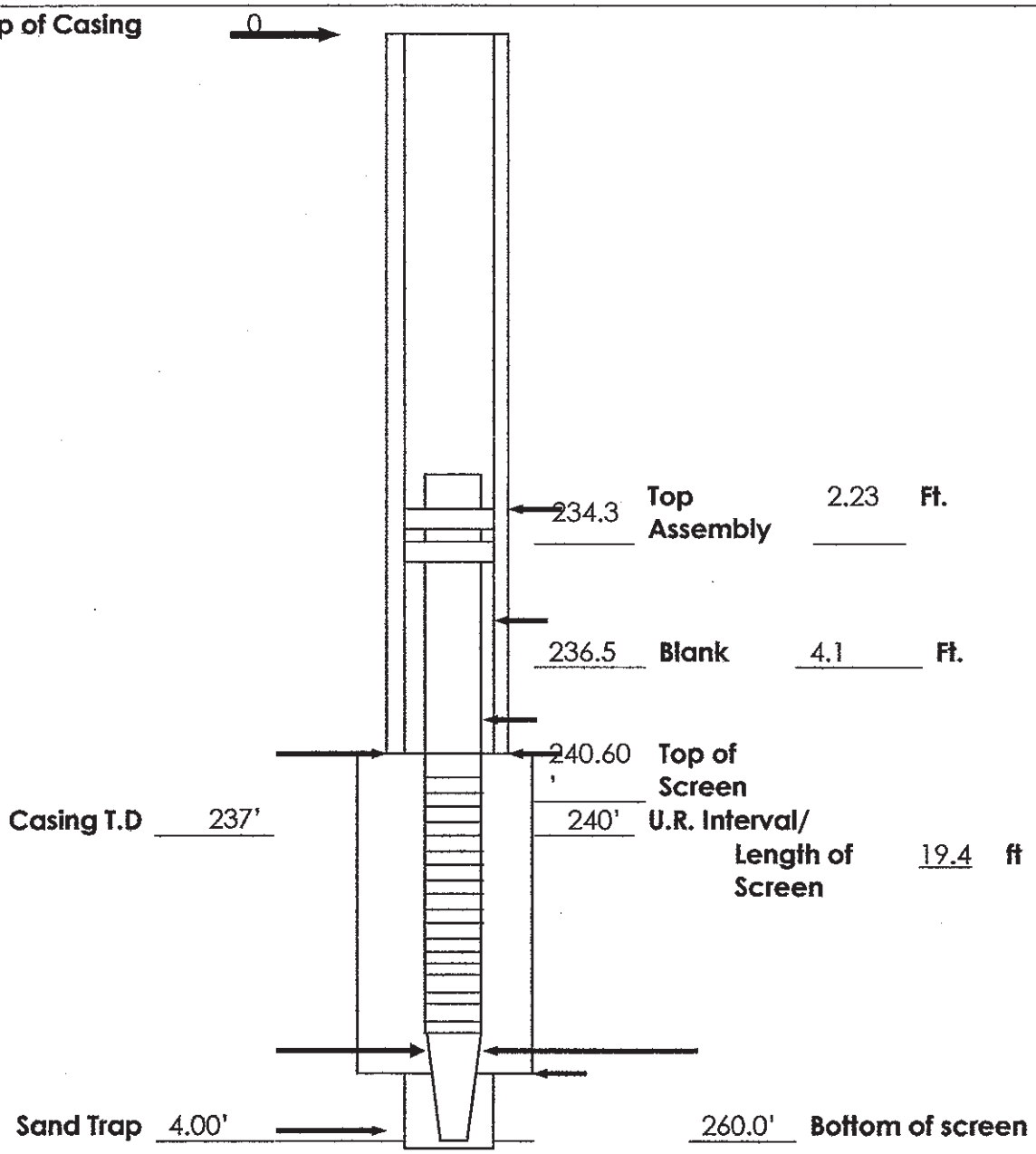

265' **U.R. Interval** 25 ft

Drilled T.D. 270'

RBLC-3

Well No.	RBLC-4	**Date:**	June 18, 2007
Lease	Braquet	**Field Supervisor:**	Mike O'Leary
Location	Weesatche	**Drilling Contractor:**	MHC X-Plorattion

Hole Dia:	7.875	Packer Type:	K-Packer (2)		
Casing Dia:	5.0"	Liner Dia.:	3"		
Underream Dia.	8.0"	Screen Type:	R	Slot Size:	0.01
Notes:					

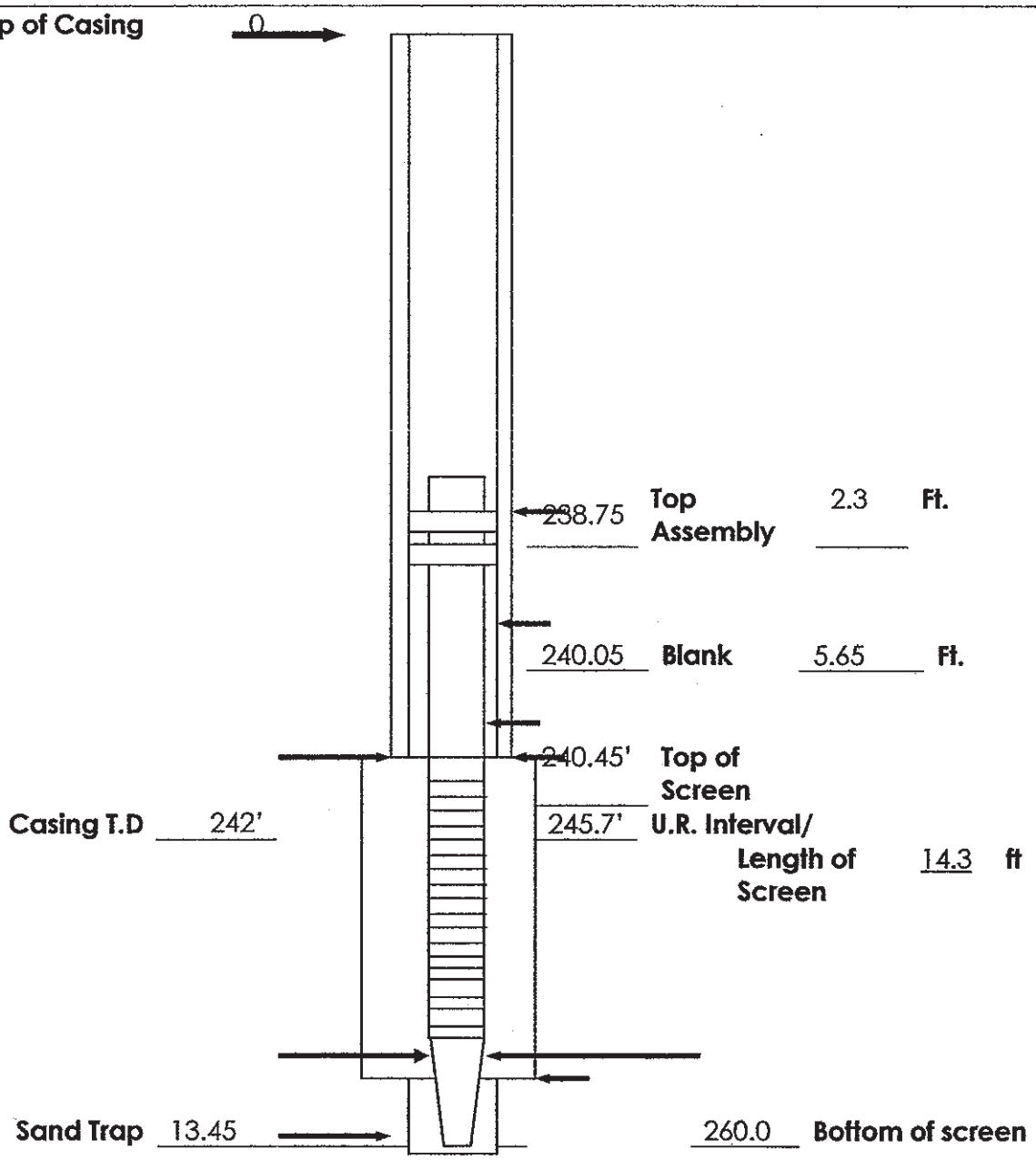

265' **U.R. Interval** 25 ft

Drilled T.D. 265'

RBLC-4

Where RBLC 5&6

Well No.	RBLC-7	**Date:**	February 15, 2007
Lease	Stanford	**Field Supervisor:**	Mike O'Leary
Location	Weesatche	**Drilling Contractor:**	MHC X-Plorattion

Hole Dia:	7.875	Packer Type:	K-Packer (2)		
Casing Dia:	5.0"	Liner Dia.:	3"		
Underream Dia.	8.0"	Screen Type:	R	Slot Size:	0.01
Notes:					

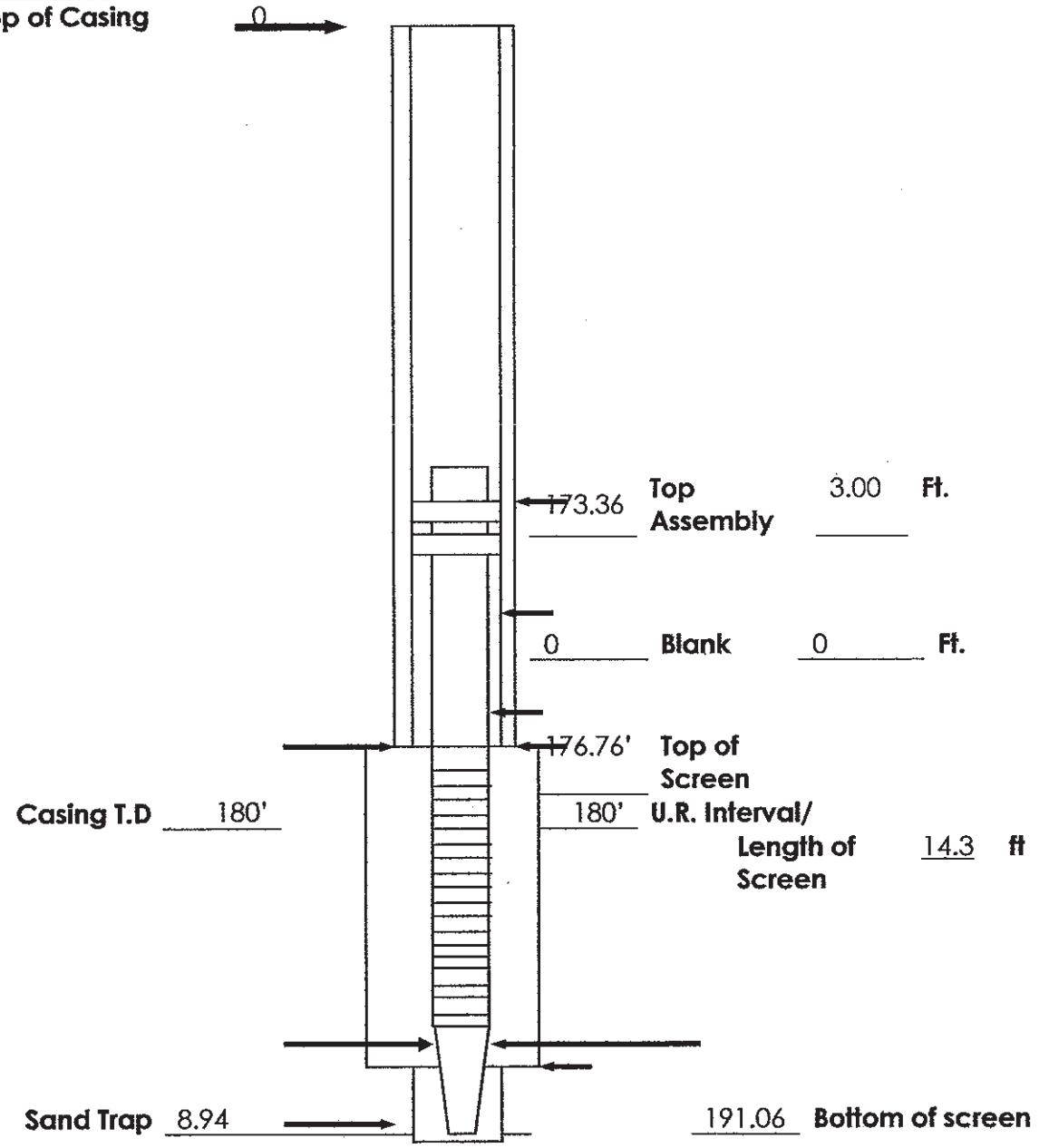

COMPLETION AND RECOMPLETION REPORT

WELL NUMBER RBLC-7
LEASE STANFORD
AREA WEESATCHE
HOLE DIAMETER 7.875"
CASING DIAMETER 5"
REAMED DIAMETER 8

DATE FEBRUARY 15, 2007
FIELD SUPV. O'LEARY
CONTRACTOR MHC X-PLORATION

LINER DATA

PACKER TYPE Fig. K NUMBER 2
LINER DIAMETER 3"
SCREEN TYPE REGULAR SLOT 0.01

GRAVEL

SIZE N/A
SACKS CALCULATED N/A TAKEN N/A

COMMENTS

TAGGED TOP OF J

USEFUL DATA

HOLE MEASUREMENTS

REAMER:
CONE
BLADE 8

CASING T.D.	180	FT.
UNDER-REAMED INTERVAL	180	FT.
	195	FT.
DRILLED T.D.	200	FT.

LINER MEASUREMENTS

	FEET	FROM	TO
TOP ASS'Y	3	173.8	176.8
STEEL BLANK	0		
SCREEN	14	177.0	191.0
SAND TRAP	9	191.0	200.0

September 28, 2007

9-28-07

195' **U.R. Interval** 15 ft

Drilled T.D. 200'

RBLC-7

Well No.	RBLD-1	**Date:**	February 3, 2007
Lease	Abrameit	**Field Supervisor:**	Mike O'Leary
Location	Weesatche	**Drilling Contractor:**	MHC X-Plorattion

Hole Dia:	7.875	Packer Type:	K-Packer (2)		
Casing Dia:	5.0"	Liner Dia.:	3"		
Underream Dia.	8.0"	Screen Type:	R	Slot Size:	0.01
Notes:					

Top of Casing 0

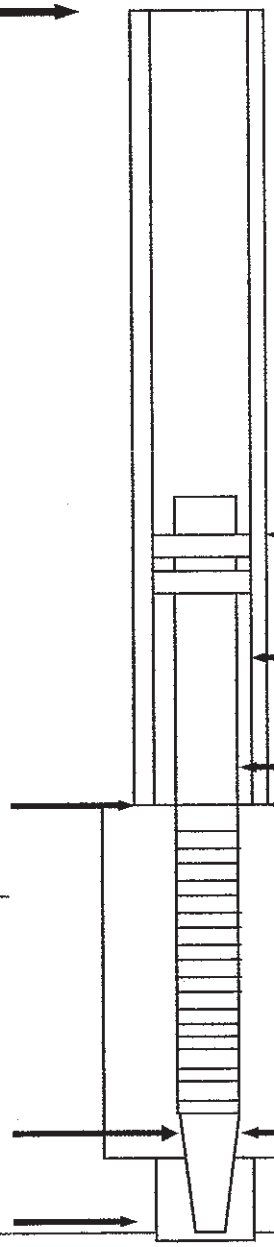

215.8 **Top Assembly** 2.18 **Ft.**

218.02 **Blank** 21.98 **Ft.**

240.00' **Top of Screen**

Casing T.D 240'

240' **U.R. Interval/ Length of Screen** 19.4 **ft** 0

Sand Trap n/a

259.40 **Bottom of screen**

260' **U.R. Interval** 20 ft

Drilled T.D. 265'

RBLD-1

Well No.	RBLD-2	**Date:**	June 11, 2007
Lease	Abrameit	**Field Supervisor:**	Mike O'Leary
Location	Weesatche	**Drilling Contractor:**	MHC X-Plorattion

Hole Dia:	7.875	Packer Type:	K-Packer (2)		
Casing Dia:	5.0"	Liner Dia.:	3"		
Underream Dia.	8.0"	Screen Type:	R	Slot Size:	0.01
Notes:					

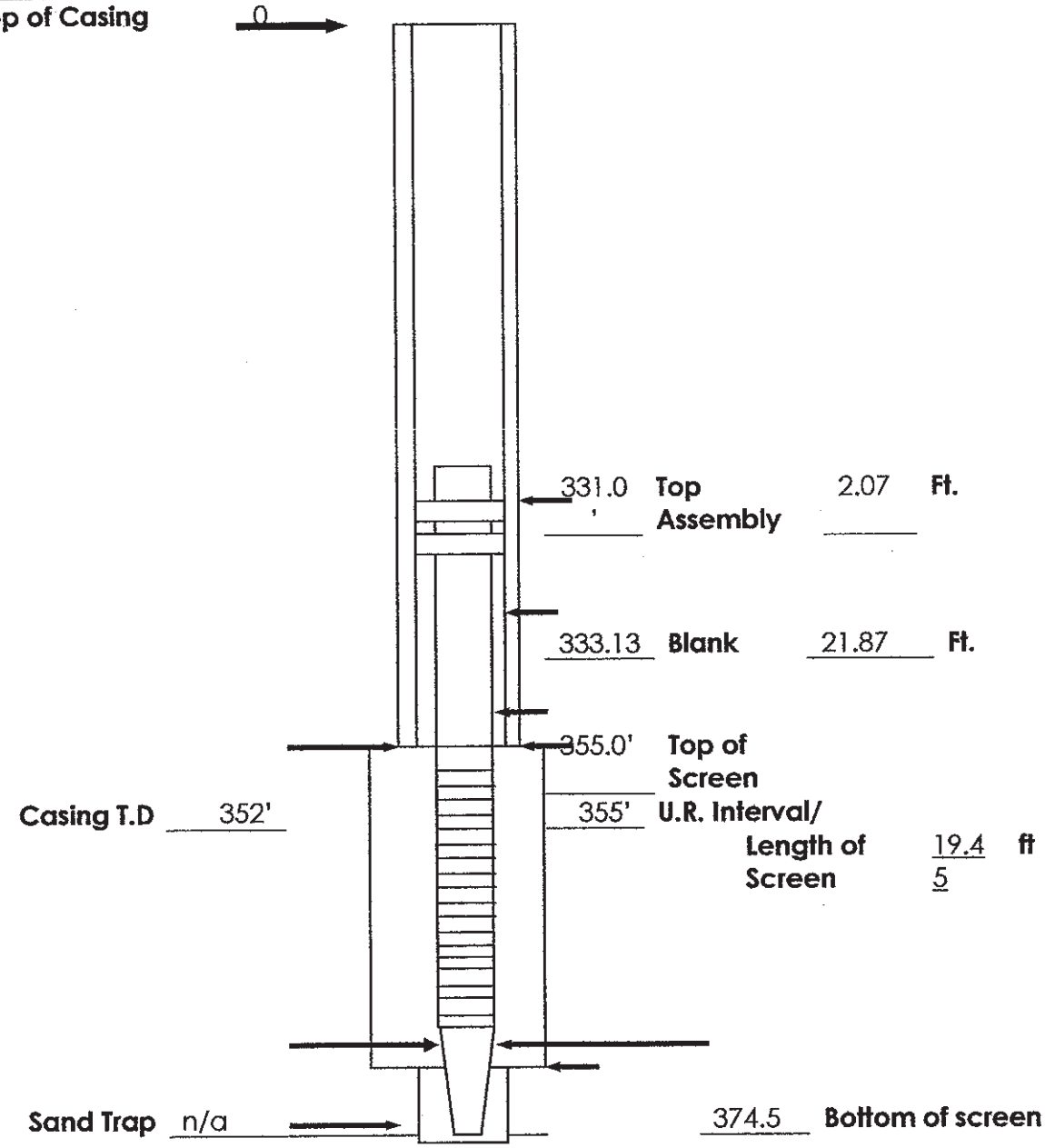

375' **U.R. Interval** 20 ft

Drilled T.D. 380'

RBLD-2

COMPLETION AND RECOMPLETION REPORT

WELL NUMBER RBLD-3A
LEASE SCHRADE
AREA WEESATCHE
HOLE DIAMETER 8.625
CASING DIAMETER 5"
REAMED DIAMETER 8

DATE Augut 16, 2007
FIELD SUPV. Underdown/Lutz
CONTRACTOR MHC X-PLORATION

HOLE MEASUREMENTS

REAMER:
CONE
BLADE 8

CASING T.D.	390	FT.
UNDER-REAMED INTERVAL	392	FT.
	417	FT.
DRILLED T.D.	420	FT.

LINER DATA

PACKER TYPE Fig. K NUMBER 2
LINER DIAMETER 3"
SCREEN TYPE REGULAR SLOT 0.01

GRAVEL

SIZE N/A
SACKS CALCULATED N/A TAKEN N/A

COMMENTS

TAGGED TOP OF J 384.17

LINER MEASUREMENTS

		FEET	FROM	TO
TOP ASS'Y	J-Collar K-Packer Steel Nipple K-Packer	2.83	384.17	387.00
STEEL BLANK		10	385.00	395.00
SCREEN		20	395.00	415.00
SAND TRAP	3"X2" Reducer PVC 2" Check Valve PVC 2" Nipple PVC 2" Check Valve PVC	1.83	415.00	416.83

USEFUL DATA

September 28, 2007

REV: 1-21-08

Well No.	RBLD-5	**Date:**	February 1, 2007
Lease	Braquet	**Field Supervisor:**	Mike O'Leary
Location	Weesatche	**Drilling Contractor:**	MHC X-Plorattion

Hole Dia:	7.875	Packer Type:	K-Packer (2)		
Casing Dia:	5.0"	Liner Dia.:	3"		
Underream Dia.	8.0"	Screen Type:	R	Slot Size:	0.01
Notes:					

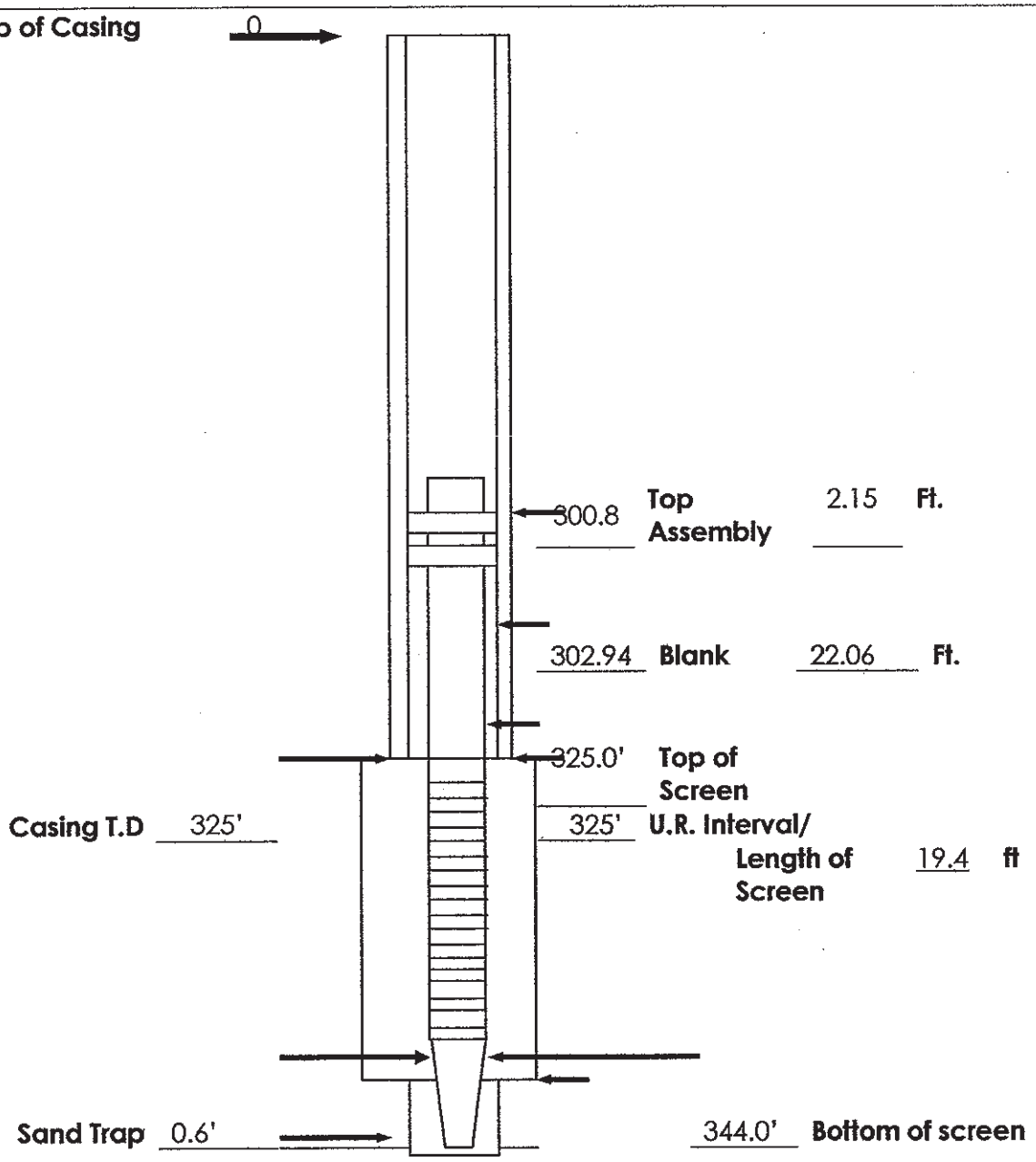

345 **U.R. Interval** 15 ft

Drilled T.D. 350'

RBLD-5

Well No.	RBLD-6	**Date:**	February 1, 2007
Lease	Stanford	**Field Supervisor:**	Mike O'Leary
Location	Weesatche	**Drilling Contractor:**	MHC X-Plorattion

Hole Dia:	7.875	Packer Type:	K-Packer (2)		
Casing Dia:	5.0"	Liner Dia.:	3"		
Underream Dia.	8.0"	Screen Type:	R	Slot Size:	0.01

Notes:

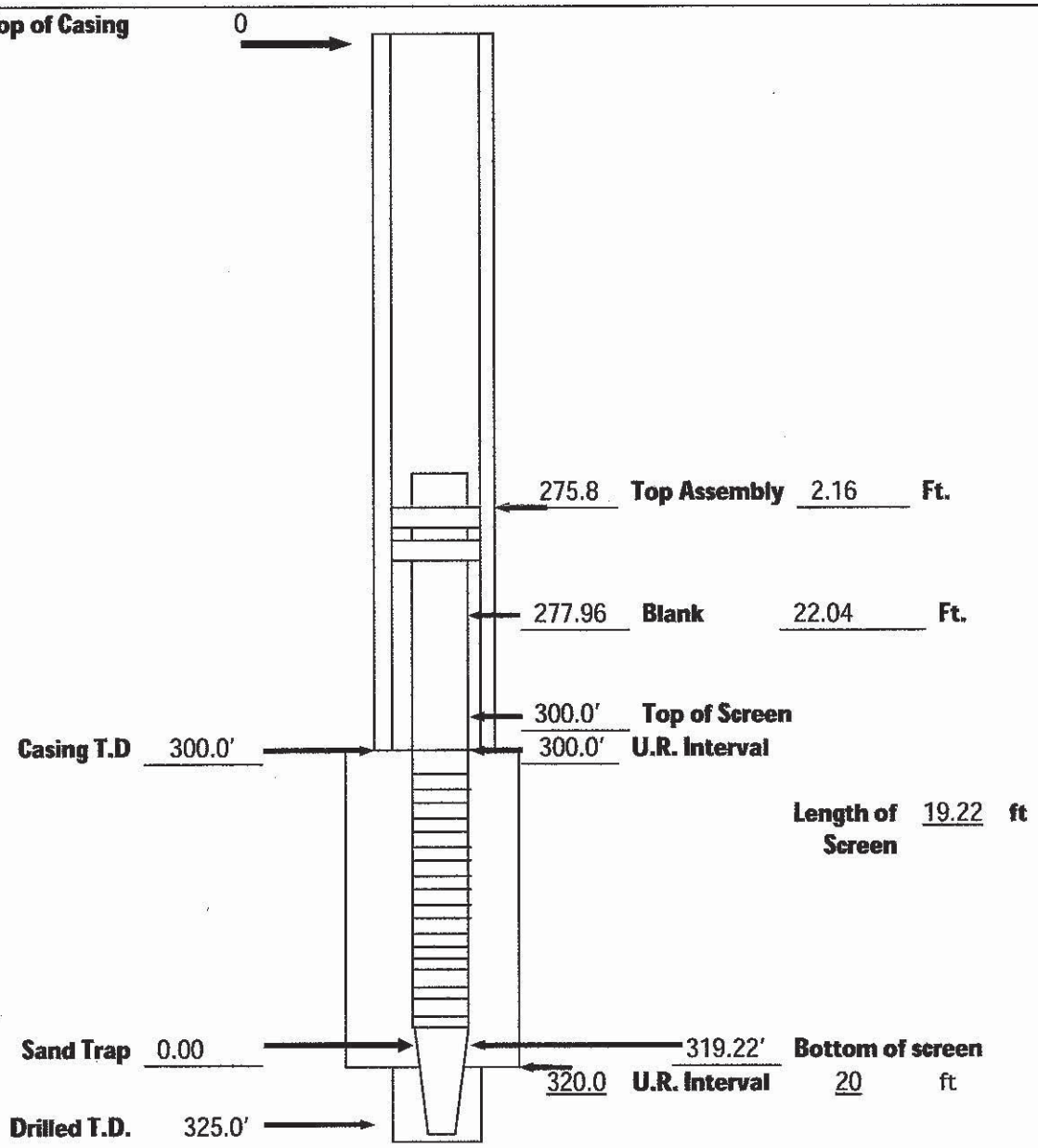

REV: 1-25-08