Removal Action Work Plan

Avery Landing Site
Avery, Idaho

for
U.S. Environmental Protection Agency on Behalf of Potlatch Land and Lumber, LLC

May 13, 2013

GeoEngineers
Earth Science + Technology

Removal Action Work Plan

Avery Landing Site
Avery, Idaho

for
U.S. Environmental Protection Agency on Behalf of Potlatch Land and Lumber, LLC

May 13, 2013

GeoEngineers

Plaza 600 Building
600 Stewart Street, Suite 1700
Seattle, Washington 98101
206.728.2674

Removal Action Work Plan
Avery Landing Site
Avery, Idaho

File No. 2315-016-02

May 13, 2013

Prepared for:

U.S. Environmental Protection Agency
1910 Northwest Boulevard, Suite 208
Coeur d'Alene, Idaho 83814

Attention: Earl Liverman

On Behalf of:

Potlatch Land and Lumber, LLC
601 W 1st Avenue # 1600
Spokane, Washington 99201-3807

Attention: Terrance Cundy

Prepared by:

GeoEngineers, Inc.
Plaza 600 Building
600 Stewart Street, Suite 1700
Seattle, Washington 98101
206.728.2674

Robert S. Trahan
Environmental Geologist

John M. Herzog, PhD
Principal

RST:JMH:CSV

Disclaimer: Any electronic form, facsimile or hard copy of the original document (email, text, table, and/or figure), if provided, and any attachments are only a copy of the original document. The original document is stored by GeoEngineers, Inc. and will serve as the official document of record.

Copyright© 2013 by GeoEngineers, Inc. All rights reserved.

GeoEngineers

Table of Contents

1.0 INTRODUCTION 1

2.0 BACKGROUND INFORMATION 1

2.1. Site Location and Land Use 1
2.2. Historical Operations and Site Use 2
2.3. Previous Investigations 2
2.4. Regulatory History and Cleanup Actions 3
2.5. Nature and Extent of Contamination 4
2.6. Sensitive Species and Environment 4
2.7. Cultural Resources 4

3.0 REMOVAL ACTION REQUIREMENTS AND OBJECTIVES 5

4.0 REMOVAL ACTION CONCEPTUAL DESIGN AND PRELIMINARY APPROACH 5

4.1. Temporary Site Controls 6
4.1.1. Site Access Control 6
4.1.2. Erosion Control and Stormwater Pollution Prevention 6
4.1.3. Dust and Noise Control 7
4.1.4. Spill Response 7
4.2. Construction Site Layout 7
4.2.1. Construction Staging Area 8
4.2.2. Contaminated Soil Staging Pads 8
4.2.3. Water Treatment Area 8
4.3. Site Preparation 9
4.3.1. Utility Locate and Services 9
4.3.2. Clearing and Grubbing 9
4.3.3. Well Decommissioning 9
4.4. Soil Excavation 9
4.4.1. Field Screening 10
4.4.2. Excavation Extent and Sequence 10
4.4.3. Excavation Dewatering 12
4.4.4. Excavated Soil Stockpiling and Dewatering 12
4.4.5. Backfill of Removal Area 13
4.4.6. Product Recovery and Containment Barrier System Removal 13
4.4.7. Removal Activities Along the St. Joe River 14
4.5. Off-Site Disposal and Recycling 15
4.5.1. Petroleum-Contaminated Soil 15
4.5.2. Recovered Free Product 15
4.5.3. Hazardous Wastes, Construction Debris and Other Material 15
4.5.4. Recycled Materials 16
4.6. Water Treatment 16
4.6.1. System Design 16
4.6.2. System Startup Testing 18
4.6.3. Operational Testing 19
4.7. Site Sampling and Monitoring 19

4.7.1. Soil Excavation 19
4.7.2. Excavated Soil 20
4.7.3. Import Fill Material 21
4.7.4. Treated Water 21
4.8. General Construction and "Green" Practices 21
4.9. Site Monitoring and Inspections 22
4.9.1. General Construction BMPs 22
4.9.2. Air 22
4.9.3. Surface Water Quality 22
4.10. Site Stabilization 23
4.10.1. Soil Disturbance Areas 23
4.10.2. St. Joe River Shoreline 24
4.11. Post-Construction Survey 24
5.0 NATURAL ATTENUATION PERFORMANCE GROUNDWATER MONITORING 24
6.0 QUALITY ASSURANCE AND CONTROL 24
6.1. Quality Management Plan 24
6.2. Contractor Quality Control 24
6.3. Construction Monitoring and Field Documentation 25
6.4. Analytical QA/QC 25
7.0 HEALTH AND SAFETY 25
8.0 ROLES AND RESPONSIBILITIES 25
9.0 PUBLIC OUTREACH 26
10.0 PROJECT SCHEDULE 26
11.0 REPORTING 26
11.1. Removal Action Progress Reporting 26
11.2. Removal Action Report 27
12.0 LIMITATIONS 27
13.0 REFERENCES 27

LIST OF TABLES

Table 1. Summary of Maximum Detected Concentrations in Groundwater

LIST OF FIGURES

Figure 1. Vicinity Map
Figure 2. Current Site Conditions
Figure 3. Temporary Site Controls
Figure 4. Removal Action Plan
Figure 5. Cross-Section A-A'
Figure 6. Cross-Section B-B'
Figure 7. Grading and Restoration Plan
Figure 8. Water Treatment System, Start-up Sampling (PH. 1)
Figure 9. Water Treatment System, General Operations (PH. 2)

APPENDICES

Appendix A. Quality Management Plan
Appendix B. Sampling and Analysis Plan
Appendix C. Quality Assurance Project Plan
Appendix D. Integrated Health and Safety Plan
Appendix E. Contigency Plan
Appendix F. Community Outreach Plan

1.0 INTRODUCTION

This document presents the Work Plan for the removal action to be completed by Potlatch Land and Lumber, LLC (Potlatch) at the Avery Landing Site (Site) in Avery, Idaho (Figure 1). The Site is a former railroad roundhouse and maintenance facility used by Chicago, Milwaukee, St. Paul, and Pacific Railroad and is located adjacent to the St. Joe River, approximately one mile west of the town of Avery, in Shoshone County, Idaho. The Site is formally referenced in the U.S. Environmental Agency (EPA) database as Avery Landing (EPA ID No. IDD984666313).

Pursuant to the Draft Final Engineering Evaluation/Cost Analysis (EE/CA; E&E, 2010) and as set forth and described in the Action Memorandum for the Avery Landing Site (EPA, 2011), and as otherwise required by EPA, Potlatch will perform removal actions followed by Site-wide post-removal action groundwater monitoring to address Site contaminants. The removal action will involve the excavation and off-Site disposal of contaminated soil, removal of the existing petroleum recovery/containment systems, backfilling and re-grading of removal excavations areas followed by Site stabilization. General construction guidelines will be implemented to protect the community and workers throughout the duration of the removal action. Additionally, Best Management Practices (BMPs) will be implemented to control for potential short-term cleanup-related impacts to workers, the community, and the environment.

The primary objective of this Work Plan is to describe the general approach, conceptual design and assumptions for the removal action. Supporting documents to this Work Plan include a Quality Management Plan (QMP), Site Specific Sampling Plan (SSSP), Quality Assurance Project Plan (QAPP), Health and Safety Plan (HASP), Contingency Plan and Community Outreach Plan. These documents are presented in Appendix A through F, respectively.

2.0 BACKGROUND INFORMATION

2.1. Site Location and Land Use

The Site is located in the St. Joe River Valley of the Bitterroot Mountains in northern Idaho, approximately one mile west of the town of Avery in Shoshone County (Figure 1). The St. Joe River borders the Site to the south and Highway 50 borders the Site to the north. The Site is located within the northeast quarter of Section 16, Township 45 North, Range 5 East, and the northwest corner of Section 15, Township 45 North, and Range 5 East.

The Site currently consists mainly of graded gravel yards and small amounts of vegetative growth over previously backfilled areas. The eastern portion of the Site currently contains a vacation cottage on the property owned by Larry and Ethel Bentcik (Bentcik). Land uses in the area around the Site are largely rural and recreational. The St. Joe River is a recreational waterway. There are several areas of commercial land nearby, including a motel and recreational vehicle park located across the river from the Site.

2.2. Historical Operations and Site Use

Historically, the Site was used as a switching and maintenance facility for the Milwaukee Railroad from 1907 until 1977. The facility included a turntable, roundhouse, machine shop, fan house, engine house, boiler house, storehouses, coal dock, oil tanks, a pump house, 500,000-gallon diesel and fuel oil above ground storage tank (AST) and other aboveground structures. Facility operations included refueling locomotives, cleaning engine parts, and maintaining equipment. During the mid-1910s, Milwaukee Railroad began to operate electric locomotives which continued to the mid-1970s.

Milwaukee Railroad filed bankruptcy (presumably in the late 1970s) and then reorganized under the name CMC Real Estate Company (CMC). Under CMC, the properties were sold and otherwise divested. Potlatch leased portions of the Site from the Milwaukee Railroad from 1973 to 1980. In 1980, Potlatch acquired the western portion (Section 16) of the Site. The eastern portion (Section 15) of the Site reverted back to the family of the previous owner (before Milwaukee Railroad began operations) who sold the property to David Thierault. In 1996, Mr. Thierault sold this property to Mr. Larry Bentcik, who is the current property owner. The original railroad grade along the northern edge of the Site was acquired by the Federal Highway Administration (FHWA) for use in the construction and expansion of State Highway 50.

Historical railroad facilities on the eastern portion of the Site included an office, store house, oil pipes, and sand, coal, and oil storage. Many of the former Milwaukee Railroad facilities, including the turntable, roundhouse, engine house, machine shop, and cinder pit, were located on the western portion of the Site. The buildings and equipment associated with the former railroad maintenance facility were presumably demolished at some point after Milwaukee Railroad ceased operations. Presently, there is little remaining at the Site to indicate its previous use as a railroad switchyard and maintenance facility, with the exception of concrete slab and rail lines remnants.

2.3. Previous Investigations

Several environmental investigations have been performed at the Site since the late 1980s. In the late 1980s, the State of Idaho Division of Environmental Quality of the Idaho Department of Health (now Idaho Department of Environmental Quality [IDEQ]) began to investigate the Site. Investigations by the IDEQ included installation of several monitoring wells and test pits in the late 1980s and early 1990s. These investigations determined that free product was a mixture of diesel and heavy oil and was present at the water table throughout the Site, with product thicknesses exceeding four feet in some locations.

In 1992, URS Consultants, Inc., (URS) performed an investigation at the Site on behalf of EPA to collect soil, groundwater, and surface water samples from the Site and surrounding area (URS, 1993). Analytical results indicated the presence of contaminants, including VOCs, SVOCs, metals, and PCBs.

In 2007, Ecology and Environment, Inc. (E&E) performed a removal assessment at the Site on behalf of EPA to investigate environmental impacts related to historical Site use (E&E, 2007). During this study, evidence of petroleum hydrocarbons was observed in groundwater and subsurface soil throughout the Site. In addition, petroleum hydrocarbons were observed along an approximately 200-foot stretch of the Site's river bank. Subsurface soil and groundwater samples

collected from the Site also contained carcinogenic PAHs (cPAHs), PCBs and metals (arsenic, iron, lead, manganese and mercury).

In 2009, Golder Associates on behalf of Potlatch performed additional soil and groundwater investigations to further evaluate Site conditions and to support preparation of an EE/CA (Golder, 2010). A component of the Potlatch EE/CA investigation was a treatability study to evaluate soil washing as a potential treatment method for petroleum-contaminated soil.

Supplemental investigation activities were later performed by GeoEngineers on behalf of Potlatch in 2011 to further delineate two areas on the western portion of the Site where evidence of petroleum hydrocarbon product and/or sheen was observed during previous investigations (GeoEngineers, 2011). Test pit explorations and measurements of depth-to-product/groundwater were used to evaluate the presence of petroleum hydrocarbon contamination.

Detailed information regarding investigations completed prior to 2010 is presented in the EPA EE/CA (E&E, 2010). Detailed information regarding investigations completed after 2010 is presented in the Supplemental Site Investigation Report (GeoEngineers, 2011).

2.4. Regulatory History and Cleanup Actions

Pursuant to agreements with the IDEQ, Potlatch installed and operated a free product recovery system (FPRS) from 1994-2000 to capture diesel and heavy oil discharging into the St. Joe River. The FPRS consisted of four subsurface extraction trenches and four extraction wells, an above ground storage tank (AST), and an infiltration trench. Recovered product was stored in the AST for off-Site disposal. During the system's operation, approximately 775 gallons of product (Farallon, 2006) were recovered from the Site. Despite operation of the FPRS, product continued to discharge to the St. Joe River. Under direction from the IDEQ, Potlatch completed additional removal actions at the Site including installation of a product containment wall and extraction wells in 2000 to prevent product discharges to the St. Joe River. However, as a result of the continued presence of petroleum seeps and sheen in the St. Joe River, the IDEQ requested the assistance of EPA in 2006 to investigate the Site and the petroleum discharge to the St. Joe River.

In 2008, Potlatch entered into an Administrative Settlement Agreement and Order on Consent (ASAOC; Comprehensive Environmental Response, Compensation, and Liability Act [CERCLA] Docket No. 10-2008-0135) with EPA to complete an EE/CA, a Biological Assessment (BA) and a Cultural Resources Evaluation (CRE) for the Site. In 2010, the EPA completed the EE/CA (E&E, 2010) for the Site. Based on the EE/CA, EPA prepared and issued the Action Memorandum for the Site in 2011 (EPA, 2011),

During the summer/fall of 2012, EPA performed cleanup activities on the parts of the Site owned by Bentcik, the United States administered by the FHWA, the Idaho Department of Lands (IDL), and Potlatch to remove contaminated materials from the Site. Contaminated materials were excavated from property owned by Potlatch and IDL to address a portion of the St. Joe River shoreline in which petroleum discharges were historically observed and to install stable side slope transitions between the Bentcik property and the FHWA property excavation areas and the Potlatch property.

In accordance with the recommended removal action alternative presented in the EE/CA dated December 2010 (E&E, 2010) and as set forth and described in the Action Memorandum for the Avery Landing Site (EPA, 2011), and as otherwise required by EPA, Potlatch will perform removal actions followed by Site-wide post-removal action groundwater monitoring.

2.5. Nature and Extent of Contamination

Based on the results of previous environmental investigations and experience gained by EPA as part of the 2012 removal action, petroleum hydrocarbon contaminated soil at the Site could extend as deep as approximately 20 feet below ground surface (bgs). During EPA's 2012 removal action, multiple lenses of varying thickness of clean and petroleum contaminated soil were encountered to final depth of the excavation. In some instances, the contaminated lenses were encountered in soil as shallow as 2 feet bgs.

The estimated horizontal extent of petroleum contaminated soil remaining at the Site following completion of EPA's 2012 removal action activities is shown on Figure 2. Detailed information regarding the nature and extent of contamination at the Site is presented in EPA's EE/CA (E&E, 2010) and Potlatch's Supplemental Investigation Report (GeoEngineers, 2011). The final extent of contamination to be excavated at the Site will be determined in the field by EPA.

2.6. Sensitive Species and Environment

A BA was completed for the Site in 2011 (E&E, 2011). The results of this assessment identified the Canada lynx (*Lynx Canadensis*) and the bull trout (*Salvelinus confluentus*) as two threatened and or endangered species that may be present at the Site. Based on the conclusions of the BA, the planned removal action for the Site will have ***no effect*** on Canada lynx and ***may affect but is not likely to adversely affect*** bull trout. In addition, the biological assessment concluded that the implementation of BMPs and conservation measures would limit the potential adverse effects of the removal action on these species. Recommended measures to avoid or minimize impacts on these species include:

- BMPs and temporary erosion and sedimentation controls (such as silt fencing, straw bales, and sediment ponds) for minimizing the potential direct and indirect adverse effects of short-term construction activities such as erosion, dust, noise, and sedimentation;
- Conducting shoreline excavation and reconstruction activities during the late summer/early fall authorized in-water work window to minimize potential negative impacts on the aquatic environment; and
- Planting of native trees and shrubs within the riparian zone for improving existing aquatic habitat along the St. Joe River.

2.7. Cultural Resources

In May 2012, Applied Archeological Research, Inc. (AAR) conducted a cultural resources survey at the Site on behalf of EPA in response to recommendations provided by the Idaho State Historic Preservation Office in their Class I Inventory Literature Review letter dated April 21, 2011 (ISHS, 2011). During the cultural resources survey, AAR identified five architectural features and three scatters of historical or likely historical artifacts and/or demolition debris at the ground

surface on the Potlatch property (AAR, 2012). Architectural features include concrete foundations for a roundhouse bay stall, lead railroad tracks to the roundhouse bay, boiler house and turntable. Artifact scatters include brick debris and glass bottles with limited markings. Based on these findings, AAR recommended the following:

- A cultural resource monitor observe excavation activities in the vicinity of the four identified architectural features to ensure that the details of the layout, construction and engineering of these feature are documented; and
- Field personnel conducting the removal action be aware of the potential archeological artifacts at the Site.

Identified architectural features are shown relative to the historical railroad facility layout on Figure 2.

3.0 REMOVAL ACTION REQUIREMENTS AND OBJECTIVES

In general, EPA's selected removal action requires the excavation of subsurface soil contaminated with petroleum hydrocarbons (diesel and heavy oil) and other contaminants that are comingled and cannot be segregated. Removal of this material is expected to significantly reduce or eliminate the source of contamination at the Site and to prevent the continued discharge of petroleum hydrocarbons and hazardous substances into the St. Joe River. Residual contamination remaining at the Site is expected to attenuate by way of natural processes and the progress of the attenuation will be monitored over-time, following the completion of the removal action.

The objectives of the Potlatch Property removal action are to:

- Remove the remaining components of the product containment, collection, and extraction systems that were installed as part of the 1994 and 2000 removal actions;
- Remove soil exceeding field screening methods within the upland and river bank areas;
- Remove, treat, and/or manage petroleum product that is present as light non-aqueous phase liquids (LNAPL) on groundwater within the excavations;
- Dispose of waste streams in accordance with CERCLA's off-site rule requirements; and
- Restore portions of the Site affected by the removal action including, backfilling, compacting and grading the excavation, reconstructing the river bank and re-vegetating parts of the Site.

The conceptual design and preliminary approach for the removal action that will be performed by Potlatch is summarized in the following section (Section 4.0).

4.0 REMOVAL ACTION CONCEPTUAL DESIGN AND PRELIMINARY APPROACH

Based on the results of previous environmental investigations completed by Potlatch and others, the removal action is estimated to include excavation of approximately 44,000 in-place cubic yards (cy) of overburden soil overlying the contaminated soil and approximately 16,500 in-place cy of contaminated soil. The removal area is approximately 100,500 square feet (2.3 acres) in size.

However, the actual quantities of excavated soil may be greater or less than these estimates based on the field screening results at the excavation limits (see Section 4.4). In general, overburden soil and material placed along the FHWA and Potlatch property, IDL and Potlatch, and Bentcik and Potlatch property boundaries during the 2012 EPA removal action (transition zone material) will be excavated and stockpiled for use as backfill and to access the underlying contaminated soil. Excavation activities will be sequenced to prevent the potential recontamination of backfilled soils.

Site features, including the location of the Potlatch, Bentcik, IDL, and FHWA properties and residual contamination area are shown on Figure 2. No Site work will be performed until this Work Plan has been approved by EPA. Additionally, no Site work will occur on the Bentcik property, IDL property or the FHWA property without prior approval by EPA and the respective land owners.

4.1. Temporary Site Controls

Temporary controls will be utilized to control Site access, traffic, erosion/stormwater pollution, dust, noise and spills. The planned temporary Site controls for the removal action are shown on Figure 3.

4.1.1. Site Access Control

Temporary fencing (orange safety fencing or similar), barricades, signage and/or traffic control will be used to control access to the Site during both working and non-working hours. Prior to the start of work, the Potlatch contractor will be responsible for installing fencing and/or other means to restrict general public access to work areas (i.e., construction staging, soil staging pads and water treatment areas) at the Site. Signage will be posted around the perimeter of the Site, including the shoreline of the St. Joe River to discourage and prohibit unauthorized entry of persons to the work areas.

Vehicle access to the Site will be from Highway 50 at one of four available access points (Figure 3). Signage will be positioned along Highway 50 to notify oncoming traffic of construction vehicles entering the roadway. During contaminated soil export, dump trucks leaving the Site will be offset to minimize disruptions to traffic on Highway 50. To the extent practical, all other construction related equipment will remain on Site and refrain from using Highway 50.

Site access controls will be maintained throughout the duration of the project. Flaggers will be used in cases where truck entrance to the highway cannot be safely completed without disruption to the regular flow of traffic.

4.1.2. Erosion Control and Stormwater Pollution Prevention

Throughout the removal action, BMPs will be used for the control of erosion, stormwater, and fugitive dust, and to avoid adverse impacts on wildlife and their habitats. The BMPs to be implemented during this removal action are based on the Catalog of Stormwater Best Management Practices for Idaho Cities and Counties (IDEQ, 2005), the U.S. Army Corps of Engineers (Corps) Nationwide Permit 38, and professional experience.

Erosion control measures to prevent stormwater pollution will include:

- Use of silt fencing, silt dikes, fabric filter fences, straw bales, interceptor swales, wattle and rock check dams, and/or similar BMPs to prevent sediment from entering the St. Joe River;
- Stabilizing Site access points using quarry spalls, rumble mats or other effective materials to minimize the tracking of sediment onto the Highway 50;
- Cleaning Highway 50 to remove tracked out soil; and
- Securing and covering of stockpiled soil with soil berms and/or plastic sheeting to protect from wind, rain, and other disturbances, as conditions warrant.

Erosion control measures will be inspected daily prior to the start of work, periodically during Site work and following daily construction activities to ensure their effectiveness. For example, Highway 50 will be inspected on a regular basis during contaminated soil export or backfill material import to ensure that soil is not being tracked off-Site. Similarly, stockpiles and other BMPs will be inspected on a regular basis to ensure that sediment is not entering the St. Joe River and that stockpiled material is effectively being contained.

4.1.3. Dust and Noise Control

Engineering controls will be used during construction to prevent the off-Site transport of airborne particulates/fugitive dust generated by the removal action. Controls will include wetting or covering exposed soil and stockpiles to prevent dust generation.

Construction noise will be generated by a variety of construction equipment, including truck engines, generators and other small engines, and earthmoving equipment. Construction noise will be generally limited to daylight hours between 7:00 AM and 6:00 PM, Monday through Saturday.

4.1.4. Spill Response

The Contingency Plan contained in Appendix E will be utilized to reduce the risk of spills, including the release of fuel, hydraulic fluid, and contaminated groundwater, and to establish an efficient response strategy. An emergency spill response and containment kit will be located at the Site to address spills. Spilled material and expended clean-up materials will be disposed of off-Site at an appropriate disposal facility.

Refueling or machinery maintenance operations will be conducted in a manner that will prevent releases to Site soils or the adjacent St. Joe River. Fuel hoses, fuel drums, oil or transfer valves and fittings, and any motorized equipment used during the project will be inspected daily for drips or leaks.

4.2. Construction Site Layout

As part of Site preparation, access roads, construction staging areas, water treatment areas, and temporary facilities will be constructed to support the removal action. Construction of access roads and/or staging areas may require limited grading and placement of a geotextile and/or gravel on the graded surface. The actual locations of the temporary access roads, staging areas, equipment pads, temporary construction facilities (travel trailer, water treatment system, temporary utilities, etc.), and vehicle loading zones will be determined in the field prior to the start of the removal action. The temporary staging area, water treatment area and other facilities will be

located in areas that are expected to not interfere with construction operations or vehicle traffic. The existing contaminated soil staging pads that were constructed by EPA as part of the 2012 removal action may also be used, to the extent they are needed, for the Potlatch removal action.

Upon completion of the removal action, all disturbed areas such as the areas used for construction staging, water detention, soil stockpiling and temporary facilities, including the contaminated soil staging pads constructed by EPA will be restored (i.e., removal of gravel and/or geotextile used to construct these areas followed by the removal and, off-Site disposal of contaminated materials, grading of disturbed surfaces and placement of soil, geotextile, and/or seeding to prevent erosion). Additionally, the silt fencing left in-place by EPA for use by Potlatch will also be removed.

4.2.1. Construction Staging Area

At present, a portion of the Potlatch property located west of the excavation areas is anticipated to be used for staging construction trailers, contractor vehicle parking, and storage of supplies. The tentative location of the Construction Staging Area is shown relative to the Site on Figure 3. The actual location of the Construction Staging Area will be determined in the field during the contractor mobilization.

Temporary telephone, power and other infrastructure will be brought to the staging area and connected to the construction trailers. These services will also be made available for use by EPA who may supply their own trailer.

4.2.2. Contaminated Soil Staging Pads

The existing contaminated soils staging pads constructed by EPA will be used to the degree needed, for the temporary storage of soil generated from the removal action (Figure 3). The pads are lined with a minimum of 12-mil thick, reinforced polyethylene liner surrounded by an approximately 2-foot-tall earthen dike with 1:1 slopes. The surface within the soil staging pads are sloped (at an approximate 1 percent grade) toward collection sumps to remove excess water resulting from precipitation or soil dewatering. The contaminated soil staging pads have been constructed to stockpile approximately 9,000 cy of soil. If used and during non-working hours (i.e., at night or on weekends), the staging pads will be covered and secured from wind, rain, and other disturbances. The contaminated soil staging pads will be maintained throughout the duration of the removal action for use as needed.

4.2.3. Water Treatment Area

The water treatment area will be located in the general vicinity of the excavation areas and will be used to temporarily store and treat water generated during the removal action prior to discharging to the St. Joe River or use on-Site such as for dust control. The water treatment area will be surrounded by an approximately 1-foot-tall earthen dike with 1:1 slopes lined with a minimum of 12-mil thick, reinforced polyethylene liner. To prevent damage to the liner, a working surface consisting of 2 to 4 inches of soil will be placed within the water treatment area. Piping will be used to direct water to the open excavation should a release occur.

The preliminary planned location of the water treatment area is shown on Figure 3. The actual location of the water treatment area will be determined in the field. Specific details of the water treatment system are further discussed in Section 4.6.

4.3. Site Preparation

4.3.1. Utility Locate and Services

Prior to start of Site work, local utility companies will be contacted to obtain service for the temporary on-Site facilities that will be utilized during implementation of the removal action (i.e., water-treatment facility, temporary construction trailers, etc.). In addition, utility locating agencies will be contacted in order to identify the utilities that exist at the Site in the vicinity of the work areas. Active utilities located within/adjacent to the excavation areas such as the existing community sewer line will require temporary or permanent relocation. Potlatch will meet with the respective utility owners prior to construction to develop a relocation plan. Upon completion of the removal action, all disturbed utilities will be returned to their original location or situated as agreed to with the utility owner.

4.3.2. Clearing and Grubbing

Vegetated areas that will be excavated will be cleared and grubbed as part of the removal action. Clearing will consist of the falling, trimming, and cutting of trees, brush, and shrubs. Cleared vegetation either will be cut off flush with or below the original ground surface or removed entirely. Clearing and grubbing activities will be limited to only those areas requiring soil disturbance for performing removal excavation or installation of temporary site controls and/or staging areas.

4.3.3. Well Decommissioning

Monitoring and product recovery wells located within the removal area will be decommissioned by a well driller licensed in the State of Idaho per Idaho Code 42-238 unless an alternated method for abandoning Site wells (i.e., abandonment by complete removal during construction) is authorized by the Idaho Department of Water Resources (IDWR). Wells will be abandoned in a manner compliant with IDAPA 37.03.09 Well Construction Standards Rules. Appropriate measures will be taken to protect monitoring wells that are identified in the field and are located outside of the excavation area.

Unless previously decommissioned by EPA, it is anticipated that existing monitoring wells GA-1, GA-4, EMW-03, EMW-04, EMW-05, 1024, 1025, 1030, 1031 and HC-1R, and product extraction wells EW-1 and CW-01 will require decommissioning. Documentation of the well decommissioning will be provided to the IDWR.

4.4. Soil Excavation

Soil excavation will be completed using commonly available excavation equipment and standard earth work methodology. Soil excavation activities, including the excavation extent and sequence, soil segregation and stockpiling, excavation dewatering, water treatment, and backfilling and compaction are described in the following sections (Sections 4.4.1 through 4.4.7).

It is anticipated that the area of open excavation will be kept as small as possible to minimize the dewatering requirements. To meet this objective, the excavated overburden and transition zone

material that passes the field screening criteria will be temporarily stockpiled adjacent to the excavation for use as backfill. The backfill material will be returned to the excavation once the field screening criteria have been met within the active excavation and the excavation has been advanced horizontally to a sufficient distance to allow for the placement of the backfill on the complying surface. A trench will be maintained between the backfilled area and active excavation to prevent cross-contamination.

If required by the selected landfill, contaminated soil generated by the removal action will be temporarily stockpiled on Site for characterization and waste acceptance. If additional testing is not required by the selected landfill, contaminated soil generated from the excavation will be transferred to the disposal facility without additional characterization. Potlatch will provide EPA with copies of all correspondence with the selected landfill regarding testing requirements prior to initiating disposal activities. Excavated material may however, be temporarily stockpiled on-Site prior to transport regardless of the landfill testing requirements to manage materials throughput and trucking capacity. Off-Site transport and disposal of materials generated by the removal action is further discussed in Section 4.5

4.4.1. Field Screening

The segregation of overburden, transition zone, and contaminated materials during excavation and final extent of excavation will be based on field screening methods (i.e., presence of free-phase petroleum hydrocarbons, oil-stained soil, sheen exceeding the field screening criteria, or elevated organic vapor). If the field screening methods indicate the presence of petroleum contamination at the expected limit of excavation, then excavation activities will extend laterally until field screening evidence of petroleum contamination is no longer observed. The final limits of excavation will be determined by EPA.

Details on the field screening methods, testing procedures and action levels are described in the SSSP and QAPP presented in Appendix B and C, respectively.

4.4.2. Excavation Extent and Sequence

It is anticipated that the excavation will generally start in the northeast portion of the Potlatch Property and progress to the southwest toward the St. Joe River to minimize the potential for recontamination of the backfill material. The river bank excavation will be implemented only during the authorized in-water work window (July 15 to September 1, 2013). Excavation activities that will be performed along the St. Joe River are further described in Section 4.4.7. The anticipated extent of excavation based on previous study results is shown on Figure 4 and in generalized cross-section on Figures 5 and 6. The final limits of excavation will be determined by EPA.

In response to AARs cultural resource recommendations (see Section 2.7), field personnel conducting the removal action will be made aware of the potential archeological artifacts that may be present at the Site. Additionally, archeological features identified by AAR during their cultural resources survey (AAR, 2012) will be documented prior to the start of the mass excavation at the Site. An archeological monitor will be present to document the layout, construction and engineering of the identified architectural features located within limits of excavation prior to disturbance. Identified architectural features are shown relative to the anticipated extent of excavation on Figure 4. If additional historical artifacts or architectural features are encountered

during the removal action, work activities in the general vicinity of the potential artifact/architectural feature will stop and an archeological monitor notified. The archeological monitor will determine the significance of the discovery and what additional steps, if any, are recommend.

The contact between the overburden and underlying petroleum contaminated soil as well as the lateral extent of contaminated soil will be determined based on field screening (Section 4.4.1). Excavation activities will extend laterally until field screening evidence of petroleum contamination is no longer observed. Excavation activities will extend vertically until field screening evidence of petroleum contamination is no longer observed or to a depth of approximately two feet below the seasonal low groundwater level of 17 feet bgs. Excavation sidewalls will be maintained at an approximate 1.5:1 slope. If necessary, the excavation sidewalls will be laid back further to maintain a stable slope. The final limits of excavation will be determined by EPA.

Clean backfill soil placed within the transition zone between the FHWA and Potlatch, IDL and Potlatch, and Bentcik and Potlatch removal action areas by EPA (Figure 4) will require partial removal to access the full depth of contamination on the Potlatch property. The clean backfill will be removed and field screened to verify that this material has not been impacted by the residual petroleum contamination present on the Potlatch property since completion of the 2012 removal action by EPA. EPA utilized a white geotextile where the backfill material was placed on the contaminated soil within the Potlatch property transition. If during the course of the removal action, EPA determines that the contaminated soil becomes inaccessible, a geotextile will be placed between the inaccessible portion of contaminated soil and backfill material as an environmental marker to denote the presence of subsurface contamination.

Clean overburden and transition zone backfill material generated during the excavation will be temporarily stockpiled adjacent to the excavation for reuse to fill the excavated area. It is anticipated that backfilling activities will be conducted concurrently with excavation activities to minimize size of the open excavation area and dewatering demands. Limitations in the available area adjacent to the excavation may require that overburden and/or transition zone backfill soil be temporarily stockpiled away from the excavation in other portions of the property. Stockpiled material will be secured until it can be reused for backfill in the removal excavation. BMPs will be utilized to prevent erosion (see Section 4.1.2).

Depending on the amount of rock estimated to be present, the excavated material generated from the petroleum-contaminated layer may be screened to segregate out the rock for reuse as backfill. In general, material generated from the contaminated layer would be processed through a screening machine to remove contaminated soil and other demolition and woody debris from the rock. Screened rock for which cleaning is unsuccessful or impractical, would be transported form the Site for landfill disposal. At present, it is not known if rock screening will be proposed. The decision to pursue this option will be determined based on observation of the amount of potentially reusable rock within the completed excavations. If the rock volume is determined to be sufficient to make use of the rock screen cost effective, then the methods and procedures for screening the material will be proposed to EPA as an addendum to this Work Plan. Use of rock screens will not be employed until approved by EPA.

Based on historical records, reinforced concrete foundations from former railroad structures will likely be encountered during soil removal activities. If encountered, these foundations will be broken into manageable-sized pieces and stockpiled on-Site. Similar to the approach used by EPA in 2012, concrete and brick debris that do not exhibit evidence of contamination, or can be efficiently cleaned will be used as backfill. Petroleum contaminated concrete and/or brick debris in which contaminated soil removal is unsuccessful or the level of contamination makes the soil removal impractical will be transported off site for landfill disposal. Additionally, wood debris and other demolition debris not suitable for reuse will be removed from the Site for landfill disposal. Disposal of metal debris is further discussed in Section 4.5.4.

Shoreline excavation activities will be limited to the in-water work period from July 15 to September 1, 2013 to minimize potential negative impacts on the aquatic environment. Further details on the shoreline excavation are presented in Section 4.4.7.

4.4.3. Excavation Dewatering

Dewatering activities will be completed as necessary to manage the groundwater level within the excavation area during removal activities. To minimize the need for dewatering, soil below the groundwater table will be removed during anticipated periods of low water in the St. Joe River (July to October). Further, to reduce the amount of dewatering, the area of open excavation will be minimized during construction.

Based on observed conditions during EPAs 2012 removal action, it is anticipated that a water treatment system capable of treating water at a rate of 300 gallons per minute (gpm) will be sufficient to support dewatering of the excavations. If present, free-phase petroleum hydrocarbons or oil sheen on the groundwater surface will be contained using oil sorbent booms or similar to prevent recontamination of backfilled soil. To prevent contamination of the saturated zone below the petroleum contamination, the groundwater level within the excavation will not be lowered to an elevation below the smear zone.

The dewatering system will be installed to allow operation without interfering with other construction activities. Water removed from the excavation will require treatment by the temporary water treatment system prior to discharge to the St. Joe River or reuse for dust suppression or other on-site activities. BMPs will also be used to direct stormwater away from the excavation areas to minimize the volume of water requiring treatment.

4.4.4. Excavated Soil Stockpiling and Dewatering

Excavated overburden and transition zone material generated during the removal action which passes the field screening criteria will be stockpiled temporarily near the excavation area to minimize cross-site transport and to make the material readily available for use as backfill.

Potlatch is currently working with Waste Management to obtain a landfill use authorization for disposal of excavated material from the removal action. The landfill use authorization will specify any stockpile sampling requirements for the excavated material disposal. If stockpile testing is required by the landfill prior to disposal, then the contaminated soil from the excavation will be temporarily stockpiled pending characterization and waste acceptance in accordance with the SSSP (see Appendix B). If stockpile testing is not required by the landfill, contaminated soil

generated from the excavation will be transferred to the disposal facility without additional characterization. In this case, the soil may either be loaded directly to haul trucks or temporarily stockpiled on-Site prior to transport to manage material throughput and trucking capacity. Contaminated soil generated from the saturated zone will be temporarily stockpiled on Site (either on a contaminated soil bench within the active removal excavation or within one of the three contaminated staging pads) and allowed to dewater until visible evidence of dewatering from the stockpile is no longer observed. The contaminated soil will be transported off-Site after soil samples obtained from the stockpile pass the Paint Filter Test[1] (PFLT; EPA Method 9095). Liquids dewatering from the stockpile either will be collected and transferred to the water treatment system for processing or directed back into the excavation.

4.4.5. Backfill of Removal Area

Excavated overburden that meets the field screening criteria and clean transition area soil placed by EPA in 2012 will be put back into the completed areas of the excavation concurrent with the removal activities. A trench will be maintained between the active excavation and backfill to prevent cross-contamination. Clean water will be added to the backfill material if it is too dry for adequate compaction. Backfill will be placed in the excavations using 24-inch lifts or less and will be compacted with equipment suitable for the soil type with the goal of achieving 90 percent of the maximum relative density. Compaction monitoring and test methods are presented in the SSSP. The final backfill surface may be amended or a four-inch minimum layer of topsoil placed to create favorable conditions for Site stabilization activities discussed in Section 4.10. No compaction is required for the final grade.

Clean backfill will be imported to the Site to reconstruct the approximate pre-construction grades at the Site. The approximate final grades are shown on Figure 7. The source of the imported fill material will be determined as part of the construction mobilization. Potential sources of the imported fill material may include commercial quarries and/or other local sources (e.g., Potlatch, Shoshone County, or Forest Service). Potlatch will ensure that EPA is notified before any backfill material is obtained from County and/or federal lands. Prior to import, samples of the fill material will be collected and analyzed for chemical quality to verify that the material is clean. Density testing of the import material will be completed as necessary to manage compaction. Sampling and testing of the import fill material will be completed in general accordance with the SSSP.

Additionally, soil used to construct the contaminated soil staging pads and working surface of the water treatment area as well as material used to construction of access roads and/or staging areas (i.e., construction trailer pads, water treatment pads, equipment pads, etc.) will be reused as backfill if the material meets the field screening criteria. Unsuitable soil (i.e., soil that does not meet the field screening criteria) will be transferred from the Site for permitted landfill disposal.

4.4.6. Product Recovery and Containment Barrier System Removal

Existing monitoring wells and extraction wells installed as part of the 1994 product recovery system and 2000 containment barrier system will be decommissioned by a well driller licensed in

[1] Field test that involves suspending a conical paint filter (mesh number 60 +/- 5 percent) filled with a representative, approximate 100 gram soil sample from a tripod or ring stand for five minutes (EPA, 2012). If any liquid drips from the filter, the material will be deemed to contain free liquids and will be allowed to further dewater until which time representative samples pass the paint filter test.

the State of Idaho per Idaho Code 42-238 unless a waiver has been granted by the State of Idaho Department of Water Resources. Wells will be abandoned in a manner compliant with IDAPA 37.03.09 Well Construction Standards Rules. It is anticipated that the remnant components of these systems (i.e., polyvinyl chloride [PVC] pipes, monuments and geotextile fabric) will be removed during the excavation and appropriately disposed of off-Site. Other components of the product recovery system were previously removed from the Site by EPA during the 2012 removal action.

The approximate location of the 1994 product recovery trench and 2000 containment barrier system as previously documented are shown relative to the Site on Figure 2.

4.4.7. Removal Activities Along the St. Joe River

As part of the removal action, portions of State-owned land administered by IDL below the ordinary high water mark of the St. Joe River and adjacent to property owned by Potlatch will be excavated and reconstructed by Potlatch in order to address petroleum contamination. The anticipated bank excavation area is shown on Figure 4 and is based on the extent of EPA's 2012 excavation, existing Site soil sampling data, the location of the containment barrier system, and the historically observed zone of petroleum discharges into the St. Joe River. The actual length of affected shoreline will not be known until the upland excavation work progresses. The final limits of excavation will be determined by EPA. Shoreline excavation activities will be conducted only during the allowable in-water work period from July 15 to September 1, 2013 to minimize potential negative impacts on the aquatic environment.

Removal activities along the St. Joe River will require the removal of the existing shoreline armoring (i.e., clean rip rap), base rock and/or geotextile to access overburden and underlying contaminated soil. Armoring removed from the shoreline will be evaluated for the presence of staining, sheen, and/or free-phase product. Armor that exhibits field screening evidence of contamination will be segregated, cleaned, and reused during reconstruction of the shoreline. If cleaning of the armor stone is unable to remove the contaminated material, the armor stone will be transported from the Site for permitted landfill disposal. Additional armor stone may be imported to the Site to reconstruct the St. Joe River shoreline to resemble its approximate pre-construction configuration. Bank stabilization and restoration are further described in the Section 4.10.

During shoreline excavation activities, BMPs including, but not limited to use of containment berms, silt curtains and/or oil sorbent booms will be used and maintained in order to prevent sediment and/or contaminant discharge into the St. Joe River. In general, a silt curtain held in place using anchors will be deployed within the St. Joe River encompassing the shoreline excavation area as generally depicted on Figure 3. Oil sorbent booms and/or pads will be deployed between the silt curtain and shoreline to capture any free-phase petroleum or sheen released during the excavation. Consistent with shoreline excavation activities implanted by EPA during the 2012 removal action, the toe of the river bank will remain in place. By this method, the narrow berm of soil that will be left in place at the river interface at the base of the slope will minimize the infiltration of river water into the excavation as well as, prevent the release of free-phase petroleum and/or sheen potentially contained within the excavation to the St. Joe River.

The erosion and sediment practices implemented along the shoreline will comply with the general conditions established under the Corps Nationwide Permit 38 to ensure compliance with the federal Discharge of Oil Regulation and the State of Idaho water quality standards.

4.5. Off-Site Disposal and Recycling

4.5.1. Petroleum-Contaminated Soil

If required by the landfill, contaminated soil will be stockpiled on-Site and sampled in accordance with the SSSP for disposal characterization. If the landfill determines that characterization of the contaminated soil is not required, contaminated soil generated during the removal action either will be directly loaded into trucks and transported from the Site for permitted landfill disposal or temporarily stockpiled on-Site and allowed to dewater prior to transport to the landfill. Temporary stockpiles may be utilized to manage materials throughput and trucking capacity.

Contaminated soil transferred from the Site for landfill disposal by properly licensed, insured, and registered waste haulers in accordance with applicable state and federal solid waste handling and transportation regulations. Transportation contractor(s) shall provide documentation that demonstrates that they are properly licensed and are in compliance with applicable DOT regulations, as well as a copy of their contingency and spill control plans describing measures to be implemented in the event of spills or discharges during material handling and transporting.

4.5.2. Recovered Free Product

Free product that is recovered during the operation of the dewatering system will be transferred to 35 or 55-gallon drums and stored on-Site until completion of removal excavation. Samples will be obtained and tested from this material in accordance with the SSSP for disposal characterization. As indicated in the preceding section, this material will be transferred from the Site to a permitted disposal or recycling facility in accordance with applicable state and federal handling and transportation regulations.

4.5.3. Hazardous Wastes, Construction Debris and Other Material

Based on sample results of previous environmental studies and sample results of stockpile testing completed for the Bentcik, IDL, and FHWA property's removal actions, it is not anticipated that soil generated from the excavation will designate as a hazardous or dangerous waste. In the event that buried debris such as asbestos cement pipe, underground storage tanks (USTs), batteries, capacitors, transformers or similar are encountered, additional testing will be completed to characterize these materials as hazardous or dangerous waste. Soil designated as a hazardous or dangerous waste will be segregated and stockpiled on-Site pending treatment, waste profile authorization, and/or off-Site disposal.

As indicated in Section 4.4.2, debris such as large concrete pieces or brick in which visual evidence of contamination is observed will be cleaned and used to backfill the excavation. Debris in which cleaning is unsuccessful or impractical will be transferred from the Site for permitted landfill disposal.

In the event that asbestos containing material (i.e., cement pipe) is encountered during construction, an asbestos abatement contractor will be mobilized to the Site to properly abate, remove and dispose of the asbestos containing material.

4.5.4. Recycled Materials

During the course of the FHWA, IDL, and Bentcik property's removal actions, significant quantities of metal debris were encountered in subsurface soil. Similar to the management plan used by EPA, metal debris will be cleaned and transferred off-Site to a recycled facility.

4.6. Water Treatment

Water generated from equipment and personnel cleaning, soil stockpile dewatering, dewatering of excavation areas or resulting from the accumulation of stormwater, will be treated prior to discharge into the St. Joe River or for on-Site use such as dust control. As described above, excavation activities will extend vertically until field screening evidence of petroleum contamination is no longer observed or to a depth of approximately two feet below the local groundwater table elevation of approximately 17 feet bgs.

The temporary water treatment system is designed to treat contaminants previously detected in groundwater at concentrations exceeding Idaho surface water quality criteria (Idaho Administrative Code [IAC] 58.01.02). Table 1 presents a summary of analytes detected in groundwater at the Site and corresponding maximum detected concentrations. System design, initial system startup testing and operational testing are described in the following sections (Sections 4.6.1 through 4.6.3).

4.6.1. System Design

The temporary water treatment system will collect, handle, containerize LNAPL, treat and discharge water generated during dewatering of excavated soil as well as rainfall runoff that accumulates in excavation or containment areas, water generated from equipment and personnel cleaning, and additional groundwater or surface water encountered or generated during removal activities. The preliminary system shown on Figures 8 and 9 has been designed to treat waste water to meet the surface water quality criteria specified in the Idaho Administrative Code (2011) at a rate of up to 300 gpm. Normal influent flow rates are expected to be less than the design maximum flow conditions based on review of the EPA's 2012 construction activities.

Temporary water treatment system components anticipated for the removal action are summarized in the following sections. In addition to the primary system components summarized below, temporary piping, flow meters, pumps, sampling ports and valves will also be used.

The temporary water treatment system will be constructed within the water treatment area. The anticipated location of the water treatment area is generally shown on Figure 3. The actual location of the system will be determined in the field prior to the start of the removal action. Silt fencing or soil berms will surround the water treatment system as BMPs to prevent the release of untreated wastewater to the St. Joe River. Piping and/or trenches will be used to direct any released water to the open excavation areas.

4.6.1.1. OIL/WATER SEPARATOR

Waste water generated from the Site will be pumped to the treatment system where it will pass through an oil/water separator prior to transfer into pre-treatment settling tanks. The oil/water separator will be a gravity-type unit capable of removing gross free-phase product and will include collection chamber(s) for settable sludge/solids recovery. Recovered product will be stored in 55-gallon drums.

4.6.1.2. PRE-TREATMENT SETTLING TANK

Following oil/water separation, waste water will be pumped into the settling tanks with a minimum storage capacity of 100,000 gallons. Additional pre-treatment settling tank(s) will be added to the treatment system as necessary to manage the throughput of waste water generated during construction. During initial system startup testing (see Section 4.6.2) three of the five 20,000 gallon settling tanks may be isolated from influent water entering the system as depicted in Figure 8 to temporarily hold treated effluent. Upon confirmation of the performance of the treatment system, the configuration of the treatment system will be modified to the general treatment setup depicted on Figure 9.

4.6.1.3. ELECTRO-COAGULATION TREATMENT SYSTEM

An electro-coagulation (EC) treatment system will be employed to treat waste water for turbidity, suspended solids, and metals. Waste water entering the EC treatment system is monitored for pH and conductivity. After passing through the treatment cells the now treated effluent is directed to Settling Tanks where precipitated and coagulated material can settle out.

All EC system processes will be controlled by the Wavelonics Automated Operator system. This system incorporates control and adjustment of all system processes to a single touch-screen user interface. The interface allows the operator to observe system performance and operations and ascertain if there are any elements that require operator attention. In standard operation, the system is set to run automatically and send system alerts to operators via phone.

4.6.1.4. POST-TREATMENT SETTLING TANK & FILTRATION

Following EC treatment, waste water will be pumped to post-treatment settling tank(s) prior to passing through a media filter to remove suspended particulates. The post-treatment settling tank(s) will have a minimum storage capacity of 40,000 gallons. Additional post-treatment settling tank(s) may be added to the treatment system to manage the throughput of waste water generated during construction. Consequently, construction activities may also be modified to reduce the excavation area requiring dewatering to reduce the volume of water to be treated. From the post-treatment settling tanks, water will pass to a high-pressure media filtration system to remove any remaining suspended solids and heavy metals that have not settled out of the water column due to specific gravity or particle size.

4.6.1.5. WATER QUALITY DISCHARGE VALVE

Prior to the granular activated carbon treatment stage, all EC treated water will pass through an automated water quality discharge valve located in the EC treatment trailer that measures turbidity and pH in real-time. Turbidity shall not exceed background levels by more than 5 NTUs when the background is 50 NTU or less; or a 10 percent increase in turbidity when the background turbidity is more than 50 NTU. Additionally, pH shall not exceed background levels by more than 10

percent. Non-compliant water is automatically returned to the pre-treatment tanks for re-treatment via the integrated auto-actuated re-circulation valve.

4.6.1.6. GRANULAR ACTIVATED CARBON SYSTEM

A granular activated carbon (GAC) system will be employed to treat waste water for petroleum-related compounds. The GAC system will have a minimum of two carbon vessels operating in series. Water quality testing (see Section 4.6.3) will be conducted to evaluate water effluent of the primary vessel for breakthrough of constituents exceeding Idaho Administrative Code (2012) surface water quality criteria (see Table 1). Testing parameters and frequency are summarized in Section 4.6.2.

When test results indicate that the primary GAC vessel has become spent (i.e., breakthrough of constituents above permitted limits are detected), the primary carbon vessel will be replaced. At this time the secondary vessel will be moved to the primary position, and a new carbon vessel will be added in the secondary position. This sequence of changing out carbon vessels will ensure continuous treatment and eliminate the potential for contaminants passing through the treatment system.

4.6.2. System Startup Testing

Following installation of the initial water treatment system, water quality sampling activities will be conducted to evaluate the performance of the treatment system and ensure that effluent water generated is in compliance Idaho surface water standards (IAC 58.01.02). The general layout of the treatment system layout during initial system startup is depicted on Figure 8.

At system startup, groundwater generated from the excavation will be pumped through the treatment system, tested and released to the St. Joe River in 10,000 gallon batches. Each treated 10,000 gallon batch will be stored in a separate post treatment storage tanks isolated from one another using inline valves (see Figure 8) pending chemical analysis. Water will only be release if upon confirmation that the test results confirm compliance with the water quality discharge criteria presented in Table 1. If initial test results exceed the water quality discharge criteria, modifications to the water treatment system will be made and batched water represented by the failed sample will be re-circulated through the treatment system for additional treatment and follow up testing. Following confirmation that the water treatment system is operational as demonstrated by successfully treating five consecutive 10,000 gallon batches (50,000 gallons total), system startup sampling will transition to operational testing as described in Section 4.6.3.

In accordance with the SSSP, treated water samples for system startup testing will be obtained from influent and effluent sample locations and submitted for chemical analysis of metals, SVOCs, PAHs, and PCBs. System startup sampling locations, methods and procedures are presented in the SSSP and/or QAPP (Appendix B and C, respectively). In addition to the chemical analysis, effluent water will be measured in the field for settable solids, turbidity, temperature, electric conductivity, and pH as well as evaluated for the presence of surface water sheen. Settable solids shall not exceed 1 milligram per liter per hour. Turbidity shall not exceed background levels by more than 5 NTUs when the background is 50 NTU or less; or a 10 percent increase in turbidity when the background turbidity is more than 50 NTU. Electric conductivity, temperature and pH shall not exceed background (i.e., surface water conditions upstream of the Site) by more than 10

percent. Effluent water exhibiting sheen (oil film with rainbow color) will not be discharged to the St. Joe River. During system startup testing, flow monitoring and pressure readings will be recorded from all of the gauges and flow meters in order to demonstrate that the system is operating properly. Adjustments will be made to the system to maintain a continuous flow rate while meeting the operating requirements for each system component. Only water that is suitable for discharge will be released to the St. Joe River or used on-Site. The discharge point for the treatment system will generally be located downstream of the Site. The actual discharge point will be determined in the field based on the actual location of the water treatment system.

4.6.3. Operational Testing

Operational testing of the water treatment system will be conducted in accordance with the SSSP once system startup samples confirm that treated waste water meets the federal criteria and Idaho surface water quality discharge criteria and EPA approves the transition to full operation. Operational water samples will be collected on a weekly basis during normal operation of the system to monitor the discharge concentrations. Operational samples will be obtained from the influent water after it has passed through the OWS (influent sample), between the primary and secondary GAC vessel (breakthrough sample) and after following GAC treatment (effluent sample). Operational sampling locations, methods and procedures are presented in the SSSP and/or QAPP (Appendix B and C, respectively). The general layout of the treatment system layout during operational use is depicted on Figure 9.

Influent and effluent samples will be submitted for chemical analysis of SVOCs, PAHs, PCBs and metals. Water samples collected between the primary and secondary GAC vessels will only be submitted for chemical analysis of PAHs to monitor for contaminant breakthrough. In addition to chemical analysis, effluent water will be measured in the field for settable solids, turbidity, electric conductivity, and pH as well as evaluated for the presence of surface water sheen. Settable solids shall not exceed 1 milligram per liter per hour. Turbidity shall not exceed background levels by more than 5 NTUs when the background is 50 NTU or less; or a 10 percent increase in turbidity when the background turbidity is more than 50 NTU. Electric conductivity, temperature and pH shall not exceed background by more than 10 percent. Effluent water exhibiting sheen (oil film with rainbow color) will not be discharged to the St. Joe River.

If effluent water sample results exceed the system discharge requirements (i.e., chemical criteria presented in Table 1 or field measure parameters presented above), the system will be shut down and adjustments made to meet the discharge requirements. Any exceedance will be recorded and promptly reported to EPA.

4.7. Site Sampling and Monitoring

Specific details of the sampling activities (i.e., sample locations, frequency, field and laboratory analysis, and rational) that will be conducted during the removal action are presented in the SSSP (Appendix B) and summarized in the following sections.

4.7.1. Soil Excavation

Soil excavation activities will be performed to remove clean overburden and contaminated soil identified by field screening methods (discussed in Section 4.4.1) from the Site as described in

previous sections. At the final limits of excavation, sidewall and base soil samples will be obtained and submitted for chemical analysis to identify the baseline concentrations for natural attenuation monitoring in accordance with the SSSP presented in Appendix B. Sidewall samples will be obtained at a frequency of one per 300 linear feet of excavation sidewall. Excavation sidewall samples will be obtained at the approximate vertical midpoint of the observed petroleum-contaminated soil layer. Potlatch will use discretion with respect to collection of sidewall samples from the transitions between the Potlatch and FHWA properties, Potlatch and IDL properties, or Potlatch and Bentcik properties since the sidewall is comprised of clean backfill material placed by EPA. Sidewall samples will be collected from these transitions to confirm any areas suspected to have been re-contaminated as part of the transition area construction. Base samples will be obtained on a grid pattern with grid cells measuring approximately 150 feet (along the plume length) by approximately 100 feet (along the plume width). The location and orientation grid pattern being used for this removal action is based on EPA's 2012 removal action base sampling grid (E&E, 2012).

Samples will be collected directly from the soil surface or, depending on stability of the excavation and access to the selected sample location, may be collected from the bucket of the backhoe performing the excavation. Samples collected using a backhoe will be between the bucket teeth away from the metal surfaces. Samples will be placed in laboratory supplied containers, filled to minimize headspace and placed in a cooler with ice pending chemical analysis.

The approximate locations of base and sidewall samples based on the maximum expected limits of excavation are shown on Figure B-2 of the SSSP (Appendix B). The actual soil sample locations will be determined in the field based on the actual excavation limit.

4.7.2. Excavated Soil

During excavation, field screening methods (discussed in Section 4.4.1) will be used to determine the contact between the petroleum contaminated soil and clean overburden. A visual marker (i.e., white geotextile fabric) placed by EPA during the 2012 removal action marks the contact between the contaminated soil and clean transition zone material placed by EPA. Overburden and clean transition zone material will be temporarily stockpiled on-Site for reuse as backfill.

If requested by the landfill, soil in which field screening methods indicates petroleum contamination will be stockpiled on-Site and sampled at a frequency determined by the receiving landfill, and submitted for chemical analysis for disposal characterization in accordance with the SSSP presented in Appendix B. In addition, contaminated soil generated from the saturated zone of the excavation will be allowed to drain until samples from the stockpile passes the PFLT (EPA Method 9095).

In the event that buried debris such as asbestos pipes, LUSTs, batteries, capacitors, transformers or similar are encountered, representative material and/or soil samples will be obtained to evaluate whether the material designates as a hazardous or dangerous waste. Any material and/or soil designated as a hazardous or dangerous waste will be segregated and stockpiled on Site pending treatment, waste profile authorization, and/or off-Site disposal. Material designating as a hazardous or dangerous waste will be handled in accordance with applicable state and federal regulations.

4.7.3. Import Fill Material

Prior to the import of fill material from an off-Site source, samples of the source material will be collected and submitted for chemical analysis of diesel- and heavy oil-range petroleum hydrocarbons, SVOCs, VOCs, and PCBs as described in the SSSP presented in Appendix B. Additionally, representative samples of the source material will also be collected and tested to determine maximum dry density as necessary, using a modified proctor by ASTM D1557. Modified proctor test results will be used to evaluate compaction during backfill placement.

4.7.4. Treated Water

Water samples will be obtained from the water treatment system during system startup and system operation. Water samples of the influent (pre-treatment) and effluent (post-treatment) will be analyzed for SVOCs, PAHs, PCBs, and metals to evaluate performance of the treatment system and ensure that water being discharged to the St. Joe River meets the federal and State surface water discharge criteria (chemical analytical discharge criteria is presented in Table B-2, field measured water quality criteria are discussed in Section 4.6.2 and 4.6.3).

Product recovered from the water treatment system will be sampled and tested as required for acceptance and transport to a licensed disposal or recycling facility.

4.8. General Construction and "Green" Practices

BMPs will be employed throughout construction for control of erosion, stormwater, and fugitive dust, and to prevent adverse impacts on wildlife and their habitats. The BMPs to be implemented during the Potlatch Property removal action will be based on the Catalog of Stormwater Best Management Practices for Idaho Cities and Counties (IDEQ, 2005), the Corps Nationwide Permit 38, and professional experience.

In addition to implementation of Site BMPs, the following "green" practices will also be employed:

- **Reuse and Recycle** – Field screening methods will be used to determine whether Site materials used to construct the staging areas and contaminated soil staging pads (i.e., soil used to construct the 2-foot-tall earthen dikes) may be reused to backfill the excavation areas. Overburden soil, transition zone backfill, and shoreline armor will be reused on the Site to minimize the quantity of additional materials needed to backfill and stabilize the Site. To the extent practical, larger rock will be separated from the contaminated soil, decontaminated and reused for backfill. Vegetation (i.e., trees and bushes) may be used to for stormwater bio-filtration and habitat restoration. Additionally, BMPs used for Site controls (i.e., silt fencing, swales, stormwater piping, etc.) will be reused to reduce overall construction waste. Metal debris generated from the excavation will be transferred from the Site for recycling.
- **Stormwater Management** – BMPs will be used to slow stormwater runoff (i.e., erosion control) and divert water to infiltration areas or away from excavation areas to minimize the volume of waste water requiring treatment. Treated waste water will be used for dust control and equipment washing to minimize the need for imported water to the Site. In addition, stormwater BMPs such as silt fencing may also serve as Site controls (i.e., fencing) to prevent the entry of unauthorized personnel to the Site from the St. Joe River.

- **Reduction of Vehicle Emissions and Fuel Consumption** – Staging areas and soil stockpile locations will be positioned at the Site to reduce the distance that vehicles travel to reduce excess vehicle emissions (i.e., placement of backfill stockpiles adjacent to excavation areas and reuse of on-Site materials). Opportunities will be explored to locate and identify local backfill and gravel sources for import material. Vehicles not in use will be shut off to reduce excess fuel consumption.

4.9. Site Monitoring and Inspections

Specific details of the monitoring activities (i.e., sample locations, frequency, field analysis, and rational) and Site inspections that will be conducted during the removal action are presented in the SSSP (Appendix B) and, Contingency Plan (Appendix E), respectively, and are summarized in the following sections.

4.9.1. General Construction BMPs

The contractor and field inspectors for Potlatch will be responsible for monitoring and inspection of site controls and BMPs to ensure the protection the community, workers, and the environment throughout the duration of the removal action. Site controls and BMPs will be inspected regularly to ensure proper function. Site controls and BMPs will be modified as appropriate to meet the project objects.

4.9.2. Air

Perimeter air quality will be monitored regularly during construction activities to assess the impact of Site work on the community, workers, and the surrounding environment. Real-time monitors (AeroTrak Handheld Particle Counter or similar) will be utilized to measure particulate matter (particles less than 10 microns) in the air. The real-time monitors will be utilized at upwind (background), mid-Site, and downwind locations of Site activity to determine and record perimeter background and impacted conditions. Monitoring for Site worker health and safety within the Site will be completed in accordance with each parties respective HASP. Engineering controls will be used during construction (e.g., wetting or covering exposed soil and stockpiles), to prevent the off-Site transport of airborne particulates.

4.9.3. Surface Water Quality

Surface water quality will be monitored regularly during construction activities at upstream, mid-Site, and downstream locations as generally shown on Figure B-2 of the SSSP to assess the potential impact of Site work on the St. Joe River. The proposed upstream location has been selected to assess background conditions. The proposed downstream location has been selected to be downgradient of the planned excavation areas and treated water treatment discharge point. A mid-Site location will be determined in the field based on the actual location of the water treatment system and discharge point and will be used to assess the potential impacts to surface water quality from the discharge of the treated water. The following parameters will be measured on a daily basis during excavation, active waste water discharge, and/or during shoreline excavation activities:

- Acidity (pH);

- Electrical conductivity (EC);
- Dissolved oxygen (DO);
- Turbidity; and
- Temperature.

Monitoring will be conducted on a daily basis to provide prompt assessment during construction to identify any surface water quality problems that may be occurring as a result of construction activities, and to demonstrate compliance with legal and other monitoring requirements, including the water quality criteria and/or targets for the project. Field parameters of surface water pH and temperature will be measured using a Hanna Instruments combination meter or similar. Surface water turbidity will be measured using a Lamont turbidimeter or similar. If a water quality problem is indicated from the monitoring results, appropriate actions will be implemented for identification and management of the problem.

4.10. Site Stabilization

Ground surfaces at the Site affected by the removal action will be restored using stockpiled overburden soil, or imported clean backfill to the approximate grade shown on Figure 7. The re-graded area, and other areas disturbed during construction will be seeded.

Stabilization of these areas is described in the following sections.

4.10.1. Soil Disturbance Areas

Disturbed areas of the Site resulting from excavation, soil/equipment staging, and/or the installation of access roads will be re-vegetated with native grasses to minimize the potential for erosion. Native seed mixtures for the area consistent with U.S. Department of Agriculture (USDA) or other local agency-recommended (e.g., U.S. Forest Service) species will be used to stabilize Site soil. Seed mixtures will be applied using one or more of the following methods:

- Hydroseeder (option of combining seeding, tackifiers, and tracers);
- Blower equipment with adjustable disseminating device capable of maintaining a constant, measured rate of material discharge that will ensure an even distribution of seed at the rate specified;
- Power-drawn drilling equipment or seeders; and/or
- Manual seeding method.

Seed will be applied on firm soil with a roughened surface. Topsoil amendments may be used to create favorable conditions for successful seed establishment. Areas compacted with vehicle traffic will be disked and/or roughened prior to seed application. Exposed areas steeper than 3H:1V will be stabilized with coir matting (or similar) to minimize erosion.

4.10.2. St. Joe River Shoreline

Reconstruction of the shoreline will occur after excavation activities are completed and will consist of replacing the shoreline slope, including rip rap to resemble the existing shoreline grade that was in place prior to removal and to match the adjacent sections of shoreline protection.

Following reconstruction of the shoreline, the 15-foot riparian corridor will be restored in a manner consistent with the work EPA completed along the Bentcik property shoreline in 2012.

4.11. Post-Construction Survey

Following completion of the removal action, a survey of the Site will be performed to document as-built conditions (i.e., topography, new utility alignment, etc.). As-built conditions will be presented in the Removal Action Report (see Section 11.2).

5.0 NATURAL ATTENUATION PERFORMANCE GROUNDWATER MONITORING

Following completion of the removal action, a Natural Attenuation Performance Groundwater Monitoring Plan to evaluate the post-construction condition of the Site will be prepared by Potlatch and submitted to EPA for approval. Included in this plan will be the location and number of existing and new groundwater monitoring wells, constituents of concern that will be evaluated, and frequency and duration of monitoring. A draft version of this plan will be submitted to EPA for review and comment prior to finalization.

A report summarizing the results of each groundwater monitoring event will be prepared upon completion of the EPA-approved groundwater monitoring program and submitted to EPA for review and comment prior to finalization.

6.0 QUALITY ASSURANCE AND CONTROL

This section describes general quality assurance (QA) and quality control (QC) standards and procedures that will be implemented during the removal action, including quality management, contractor quality control, construction monitoring and field documentation, analytical QA/QC and health and safety.

6.1. Quality Management Plan

GeoEngineers' quality system is described in the Quality Management Plan (QMP) in Appendix A. The QMP described the quality systems used by GeoEngineers for planning, implementing, documenting, and assessing the effectiveness of activities to support environmental studies and obtain legally defendable environmental data.

6.2. Contractor Quality Control

The contractor will maintain QC records. These records will include evidence that the required inspections or tests have been performed, including the type and number of inspections or tests involved; results of inspections or tests; nature of defects, deviations, causes for rejection, proposed corrective action, and corrective actions taken.

6.3. Construction Monitoring and Field Documentation

A comprehensive record of field activities will be maintained and submitted to EPA as part of the removal action report, along with all other project-related documentation. Field documentation for this project will include field notes, field forms, field reports, photographs, and chain-of-custody forms for samples submitted for analytical testing. The field documentation will record construction, sampling, and monitoring activities, sampling personnel, and weather conditions, as well as decisions, corrective actions, and/or modifications to the project plans and procedures discussed in this Work Plan.

6.4. Analytical QA/QC

Analytical Quality Assurance/Quality Control (QA/QC) is described in the QAPP (Appendix C). The QAPP describes soil and groundwater sampling, analysis, and QC procedures that will be implemented to produce chemical and field data that are representative, valid, and accurate for use in evaluating the effectiveness of the removal action.

7.0 HEALTH AND SAFETY

Construction activities will be performed in accordance with the requirements of the Federal Occupational Safety and Health Act (29 CFR 1910, 1926). These regulations include requirements that workers are to be protected from exposure to contaminants.

A Site HASP describing actions that will be taken to protect the health and safety of Potlatch's, GeoEngineers' and Pacific Pile and Marine's (PPMs) personnel are provided in Appendix D. Potlatch, GeoEngineers and PPM personnel will operate under their own respective HASP during Site work.

8.0 ROLES AND RESPONSIBILITIES

The removal action will be performed by Potlatch and their contractors under oversight by EPA. Specific details about the key participants and interactions with EPA are summarized below.

- **EPA –** Oversight of the removal action will be conducted by the Federal On-Scene Coordinator for EPA.
- **Potlatch –** The removal action will be managed by Potlatch.
- **GeoEngineers, Inc. –** Environmental engineer for Potlatch for the removal action. Their primary responsibilities will be to provide on-Site technical assistance and engineering support and will be responsible for field-screening, collecting analytical samples, and documenting the removal action.
- **Pacific Pile and Marine (PPM) -** Cleanup contractor for Potlatch for the removal action. Their primary responsibilities will be to mobilize the personnel, equipment, and supplies necessary to implement and conduct the removal action.

9.0 PUBLIC OUTREACH

A Community Outreach Plan, presented in Appendix F, has been prepared to facilitate local stakeholder awareness and two-way communication between the community surrounding the Avery Landing Site, Site property owners and Potlatch to ensure that people are informed and provided opportunities to ask questions about the project.

10.0 PROJECT SCHEDULE

At this time, it is anticipated that PPM will mobilize to the Site in late April 2013 to begin implementation of Site and access controls prior to the start of excavation. During this period, BMPs will be installed, staging areas prepared, water treatment system established, and monitoring and/or extraction wells decommissioned. It is anticipated that removal activities will begin after the required BMPs and other mobilization activities are in place, and all Site activities are expected to be completed by October 2013. The proposed schedule for the Avery Landing removal action is summarized in the following table. No Site work will be performed until the project Work Plan has been approved by EPA. Additionally, no Site work will occur on the Bentcik property, the IDL property, or the FHWA property without prior approval by EPA and the respective land owners.

Note that the construction schedule will be updated as part of the finalization of this Work Plan following completion of contractor procurement activities that are currently underway.

Activity	Estimated Date
Pre-construction coordination with city, county, and state officials; utilities and FHWA	Currently ongoing
Pre-construction public meeting	TBD (Expected late April/early May)
Contractor mobilization to the Site	Late April 2013
Installation of Site Controls are complete	Early 2013
Removal activities begin	Late May/early June 2013
Removal activities are completed	Mid-August2013
Contractor demobilizes from the Site	Late August 2013

11.0 REPORTING

11.1. Removal Action Progress Reporting

A written progress report will be submitted to the designated EPA On-Scene Coordinator every 7th day after initiating the mobilization of persons, equipment or materials to the Site, and shall continue until the beginning of post-removal action monitoring or as may be directed by EPA. Each weekly progress report will describe all significant develops during the preceding period, including the actions performed and/or completed, analytical data received and their results, planned

actions for the subsequent reporting period and any issues or problems arising during the reporting period and their resolution or proposed resolution.

11.2. Removal Action Report

Within 60 days of completion of all on-Site cleanup activities, a draft Removal Action Report will be completed by Potlatch and will be submitted to EPA for review and comment. The draft Removal Action Report will include a summary of the following:

- Site description and background;
- Project approach and organization;
- Removal action activities;
- Field monitoring and sampling;
- Community relations;
- Quality assurance/quality control;
- Health and safety; and
- Any deviations from the Work Plan.

Additionally, copies of waste manifests, contaminated soil disposal receipts, recycled material receipts, imported material receipts, and photographs, as well as as-built drawings will be included.

12.0 LIMITATIONS

We have prepared this Removal Action Work Plan for use by the Potlatch during the removal action at the Avery Landing Site. Within the limitations of scope, schedule and budget, our services have been executed in accordance with generally accepted environmental science practices in this area at the time this report was prepared. No warranty or other conditions express or implied should be understood.

Any electronic form, facsimile or hard copy of the original document (email, text, table, and/or figure), if provided, and any attachments are only a copy of the original document. The original document is stored by GeoEngineers, Inc. and will serve as the official document of record.

13.0 REFERENCES

Applied Archeological Research, Inc. (AAR), "Results of a Cultural Resources Survey of the Avery Landing Rail Yard Project Area, Shoshone County, Idaho," prepared for Ecology and Environment, Inc., Seattle, Washington, dated July 20, 2012.

Ecology and Environment, Inc. (E& E), "Removal Assessment Report, Avery Landing Site, Avery, Idaho", prepared for the United States Environmental Protection Agency, Seattle, Washington, dated July 31, 2007.

Ecology and Environment, Inc. (E& E), "Draft Final Engineering Evaluation /Cost Analysis, Avery Landing Site, Avery, Idaho," prepared for the United States Environmental Protection Agency, Region 10, dated December 2010.

Ecology and Environment, Inc. (E& E), "Biological Assessment, Avery Landing Site Removal Action, Avery, Shoshone County, Idaho," prepared for the United States Environmental Protection Agency, Region 10, dated June 21, 2011.

Farallon Consulting, L.L.C. (Farallon), "Failure Analysis and Preliminary Corrective Action Work Plan, Avery Landing Site, Avery, Idaho," dated March 17, 2006.

Golder Associates, Inc. (Golder), "Engineering Evaluation/Cost Analysis, Avery Landing Site, Avery, Idaho," prepared for Potlatch Land and Lumber, LLC, dated January 22, 2010.

GeoEngineers, Inc., "Supplemental Site Investigation Report, Avery Landing Site, Avery, Idaho." prepared for Potlatch Forest Holdings, Inc., GEI File No. 2315-016-01, dated November 9, 2011.

Idaho Department of Environmental Quality (IDEQ),"Catalog of Stormwater Best Management Practices for Idaho Cities and Counties," dated September 2005.

Idaho State Historical Society (ISHS), "Class I Inventory (Literature Review) of the Avery Landing Site and Project Area, Shoshone County, Idaho," Letter to Earl Liverman, Environmental Protection Agency Region X, dated April 21, 2011.

United States Environmental Protection Agency (EPA), "Action Memorandum for the Avery Landing Site Located Near Avery, Shoshone County, Idaho," memorandum to Daniel Opalski, Office of Environmental Cleanup, dated July 5, 2011.

Hazardous Waste Test Methods: Method 9095 Paint Filter Test, 2012.

United States Environmental Protection Agency (EPA), Hazardous Waste Test Methods: Method 9095 Paint Filter Test, 2012. http://www.epa.gov/osw/hazard/testmethods/sw846/online/9_series.htm.

URS Consultants, Inc. (URS), "Site Inspection Report for the Avery Railroad Dump and Roundhouse Site, CERCLIS ID No. IDD984666313", prepared for the U.S. Environmental Protection Agency, Contract No. 68-W9-0054, Work Assignment No. 54-17-0JZZ, Seattle, Washington dated January 19, 1993.

TABLES

GeoEngineers

Table 1

Summary of Maximum Detected Concentrations in Groundwater[1]

Avery Landing Site
Avery, Idaho

Analyte	Number of Samples Submitted For Analysis	Analytical Method	Number of Detects	Maximum Detected Concentration (µg/L)	Idaho Surface Water Quality Standard[2] (µg/L)
Metals					
Aluminum	21	EPA 200.7/200.8	8	32,200	--
Antimony	21	EPA 200.7/200.8	16	2.8	5.6
Arsenic	12	EPA 200.7/200.8	9	**88.6**	10
Barium	21	EPA 200.7/200.8	21	305	--
Beryllium	21	EPA 200.7/200.8	2	1.84	--
Cadmium	21	EPA 200.7/200.8	2	**1.07**	0.6
Calcium	21	EPA 200.7/200.8	21	82,300	--
Chromium (total)	21	EPA 200.7/200.8	8	35.6	74
Cobalt	21	EPA 200.7/200.8	18	22.9	--
Copper	21	EPA 200.7/200.8	18	**132**	11
Iron	21	EPA 200.7/200.8	20	80,500	--
Lead	21	EPA 200.7/200.8	90	**39.8**	2.5
Magnesium	21	EPA 200.7/200.8	21	26,400	--
Manganses	21	EPA 200.7/200.8	21	5,630	--
Mercury	21	EPA 7470A/7471B	5	0.12	--
Nickel	21	EPA 200.7/200.8	21	37.8	52
Potassium	21	EPA 200.7/200.8	21	8,130	--
Selenium	21	EPA 200.7/200.8	2	1.18	5
Silver	21	EPA 200.7/200.8	1	0.532	3.4
Sodium	21	EPA 200.7/200.8	20	5,350	--
Thallium	21	EPA 200.7/200.8	1	**1.4**	0.24
Vanadium	21	EPA 200.7/200.8	10	53.2	--
Zinc	21	EPA 200.7/200.8	14	**32,000**	120
Petroleum Hydrocarbons					
Diesel-Range	21	NWTPH-DX	14	110,000	--
Heavy Oil-Range	21	NWTPH-DX	10	45,000	--
Volatile Organic Compounds (VOCs)					
Acetone	9	EPA 8260	3	3.2 J	--
Chlorobenzene	9	EPA 8260	2	3.6	130
1,2-Dichlorobenzene	9	EPA 8260	4	0.53 J	420
1,4-Dichlorobenzene	9	EPA 8260	1	0.051 J	63
Semivolatile Organic Compounds (SVOCs)					
4,6-Dinitro-2-methylphenol	5	EPA 8270	1	19 J	--
bis(2-chloroethyl)ether	9	EPA 8270	1	0.028	--
bis(2-Ethylhexyl)phthalate	9	EPA 8270	6	**390**	1.2
Carbazole	9	EPA 8270	3	0.48	--
Dibenzofuran	9	EPA 8270	1	0.02	--
Diethylphthalate	9	EPA 8270	2	0.018	17,000
Di-n-butylphthalate	9	EPA 8270	1	2.5	2,000
Di-n-octylphthalate	9	EPA 8270	1	0.08	--
n-Nitrosodiphenylamine	9	EPA 8270	1	**12**	3.3
Non-Carcinogenic Polycyclic Aromatic Hydrocarbons (PAHs)					
1-Methylnaphthalene	21	EPA 8270 SIM	12	210	--
2-Methylnaphthalene	21	EPA 8270 SIM	12	270	--
Acenaphthene	21	EPA 8270 SIM	17	9.3	670
Acenaphthylene	21	EPA 8270 SIM	9	0.25	--
Anthracene	21	EPA 8270 SIM	16	4.4	8,300
Benzo[g,h,i]perylene	21	EPA 8270 SIM	4	0.51	--

Analyte	Number of Samples Submitted For Analysis	Analytical Method	Number of Detects	Maximum Detected Concentration (µg/L)	Idaho Surface Water Quality Standard[2] (µg/L)
Fluoranthene	21	EPA 8270 SIM	12	4.2	130
Fluorene	21	EPA 8270 SIM	18	34	1,100
Naphthalene	21	EPA 8270 SIM	14	63	--
Phenanthrene	21	EPA 8270 SIM	15	59	--
Pyrene	21	EPA 8270 SIM	12	8.6	830
Carcinogenic Polycyclic Aromatic Hydrocarbons (cPAHs)					
Benzo[a]anthracene	21	EPA 8270 SIM	6	**1.6**	0.0038
Benzo[a]pyrene	21	EPA 8270 SIM	2	**0.85**	0.0038
Benzo[b]fluoranthene	21	EPA 8270 SIM	3	**0.84**	0.0038
Benzo[k]fluoranthene	21	EPA 8270 SIM	1	**0.021 J**	0.0038
Chrysene	21	EPA 8270 SIM	9	**3**	0.0038
Polychlorinated Biphenyls (PCBs)					
Total PCBs (sum of Aroclors)	13	EPA 8082	1	**0.028**	0.000064

Notes:

[1]Values referenced from the Engineering Evaluation/Cost Analysis, Avery Landing Site, Avery, Idaho prepared by Ecology and Environment, Inc. dated December 2010.

[2]Values referenced from Idaho Administrative Code 58.01.02.

EPA = Environmental Protection Agency

µg/L = micrograms per liter

-- = No screening criteria available.

Shading indicates exceedance of surface water quality standard.

FIGURES

GeoEngineers

N
W E
S

10 0 10
Miles

Notes:
1. The locations of all features shown are approximate.
2. This drawing is for information purposes. It is intended to assist in showing features discussed in an attached document. GeoEngineers, Inc. can not guarantee the accuracy and content of electronic files. The master file is stored by GeoEngineers, Inc. and will serve as the official record of this communication.
3. It is unlawful to copy or reproduce all or any part thereof, whether for personal use or resale, without permission.

Data Sources: ESRI Data & Maps

Projection: NAD 1983 UTM Zone 11N

Vicinity Map

Avery Landing Site
Avery, Idaho

GEOENGINEERS

Figure 1

Path: \\sea\Projects\2\2315016\GIS\231501602_VicinityMap.mxd Map Revised: 14 December 2012 amanza

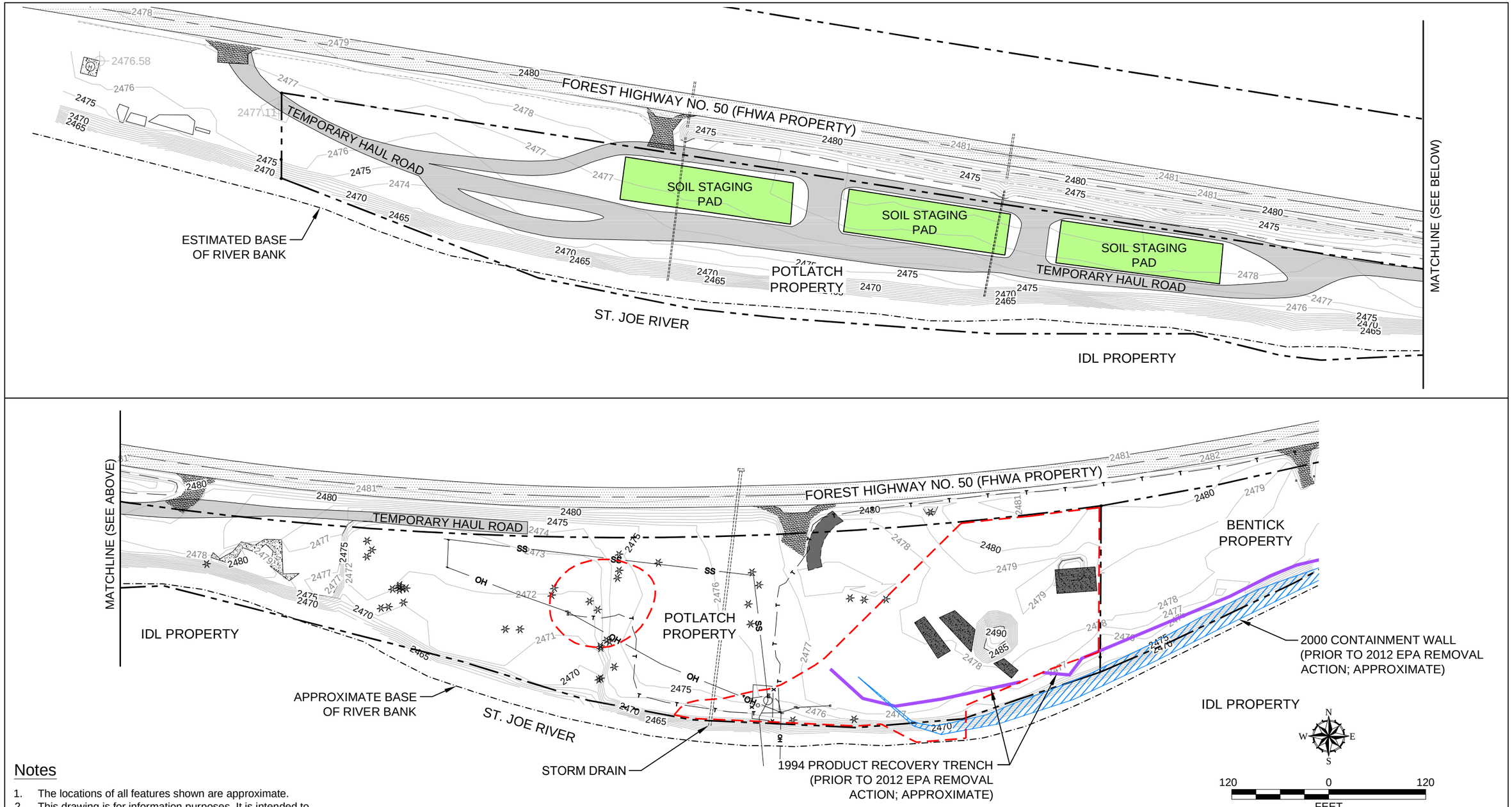

Notes

1. The locations of all features shown are approximate.
2. This drawing is for information purposes. It is intended to assist in showing features discussed in an attached document. GeoEngineers, Inc. cannot guarantee the accuracy and content of electronic files. The master file is stored by GeoEngineers, Inc. and will serve as the official record of this communication.

Reference: Existing topographic contours, property boundaries, site features including concrete, existing trees, and other miscellaneous features shown on this figure are based on Meckel Enginineering & Surveying survey file dated May 24, 2012 and September 25, 2012.

Legend

- Property Line
- 2480 — Existing Topographic Contour (Feet - NAVD 88)
- Estimated Extent of Petroleum Contamination
- Existing Trees
- Concrete Surfaces
- Architectural Feature (As Identifietd in a Cultural Resources Survey (AAR, 2012)
- IDL — Idaho Department of Lands
- FHWA — Federal Highway Administration

Current Site Conditions

Avery Landing Site
Avery, Idaho

GEOENGINEERS

Figure 2

P:\23\50\6\02\CAD\WORKPLAN FIGURES\23\50\6-02 FIG 2 SITE PLAN.DWG\TAB:LANDSCAPE MODIFIED BY TMICHAUD ON FEB 27, 2013 - 15:19

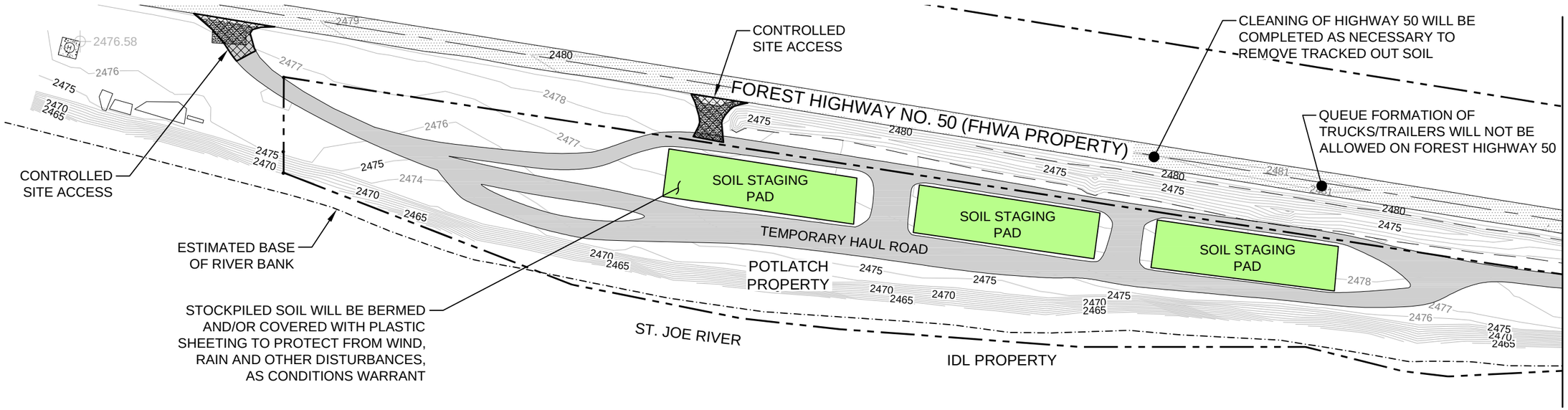

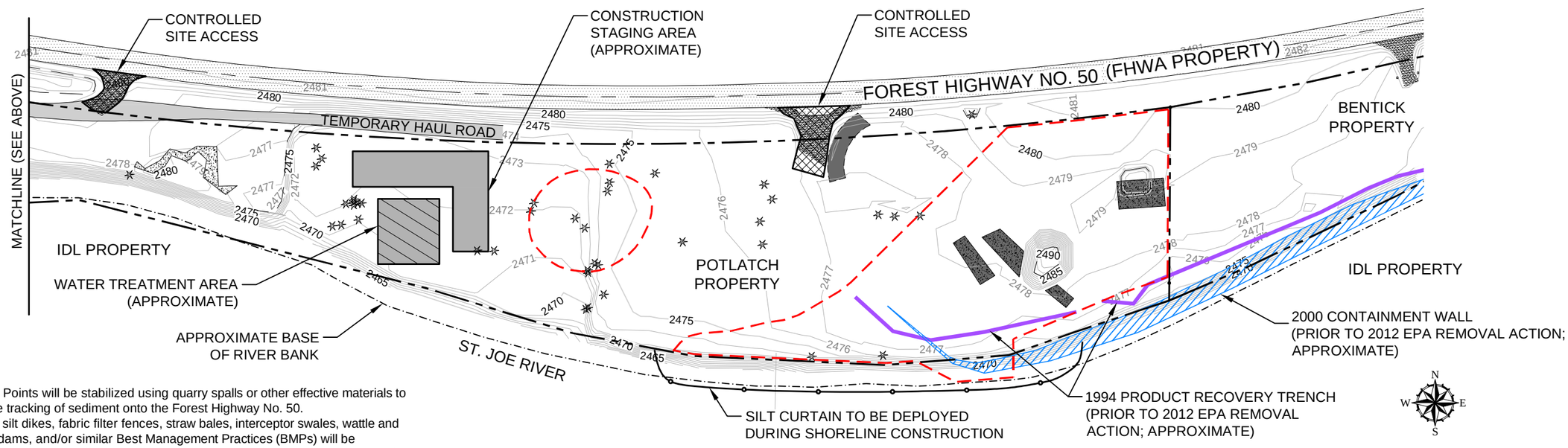

Notes

1. Site Access Points will be stabilized using quarry spalls or other effective materials to minimize the tracking of sediment onto the Forest Highway No. 50.
2. Silt fencing, silt dikes, fabric filter fences, straw bales, interceptor swales, wattle and rock check dams, and/or similar Best Management Practices (BMPs) will be implemented to prevent sediment/sediment laden untreated wastewater from entering the St. Joe River.
3. Appropriate signage will be posted on Forest Highway No. 50 to alerts vehicular traffic of entering/exiting construction vehicles. Flaggers will be used as necessary to control vehicle into and out of the Site.
4. The locations of all features shown are approximate.
5. This drawing is for information purposes. It is intended to assist in showing features discussed in an attached document. GeoEngineers, Inc. cannot guarantee the accuracy and content of electronic files. The master file is stored by GeoEngineers, Inc. and will serve as the official record of this communication.

Reference: Existing topographic contours, property boundaries, site features including concrete, existing trees, and other miscellaneous features shown on this figure are based on Meckel Enginineering & Surveying survey file dated May 24, 2012 and September 25, 2012.

Legend

- Property Line
- 2480 — Existing Topographic Contour (Feet - NAVD 88)
- Estimated Extent of Petroleum Contamination
- Existing Trees
- Site Access Point (See Note 1)
- Concrete Surfaces
- Architectural Feature (As Identifietd in a Cultural Resources Survey (AAR, 2012)
- IDL — Idaho Department of Lands
- FHWA — Federal Highway Administration

Temporary Site Controls

Avery Landing Site
Avery, Idaho

GEOENGINEERS

Figure 3

P:\2\23150\16\02\CAD\Workplan Figures\23150\6-02 Fig 3 Temporary Controls Plan.dwg\TAB:Landscape modified by tmichaud on Feb 27, 2013 - 17:07

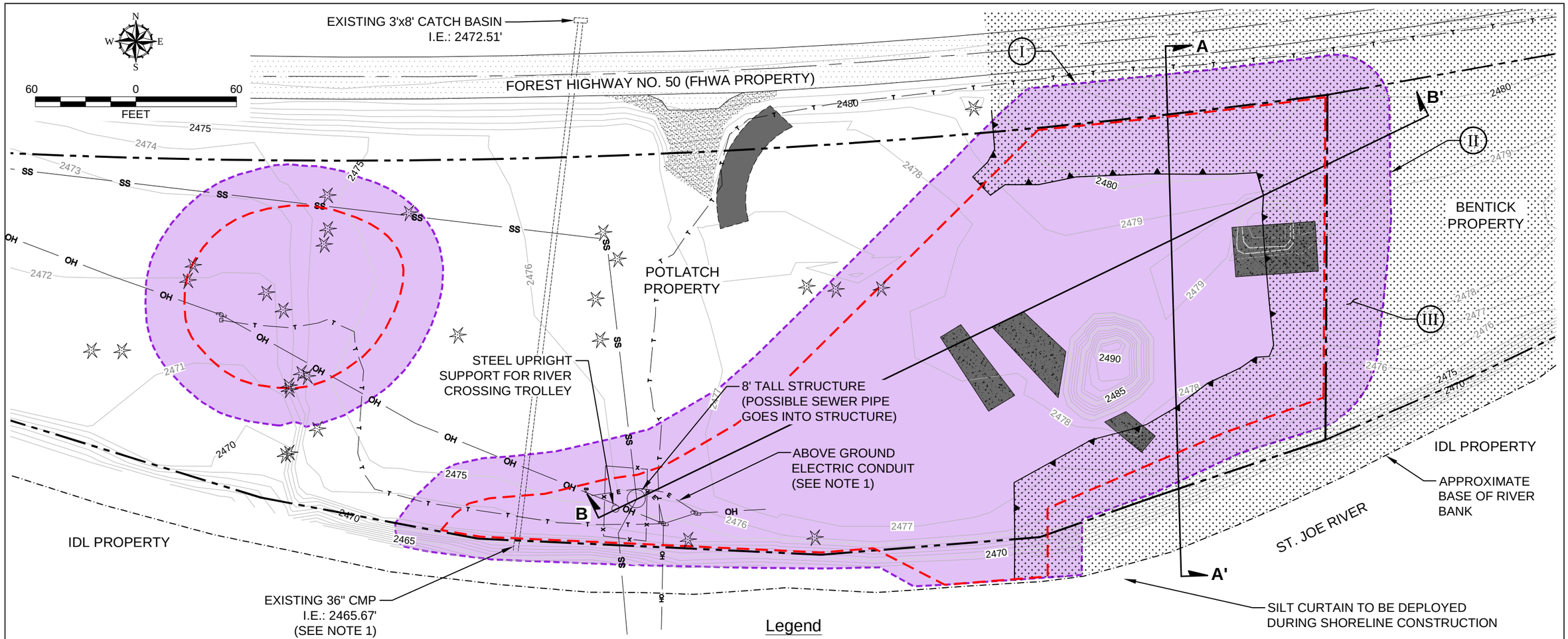

Legend

	Property Line
2480	Existing Topographic Contour (Feet - NAVD 88)
	Maximum Expected Limits of Remedial Excavation (Top of Side Slope)
	Estimated Extent of Petroleum Contamination
	Top of slope for EPA's excavation completed within Potlatch property in 2012. (Based on Meckel Engineering & Surveying survey file dated 09/25/12)
	Silt Curtain (See Note 2)
	Backfill Soil Rip-Rap Placed during EPA's 2012 Removal Action/Restoration
	Concrete Surfaces
IDL	Idaho Department of Lands
FHWA	Federal Highway Administration
	Existing Trees
	Power Poles (See Note 1)
x x x	Existing 6-Foot Tall Chain Link Fence (See Note 1)
OH	Existing Overhead Power Line (See Note 1)
SS	Approximate Path of Underground Sewer Line (See Note 1)
T T	Underground Communication (See Note 1)
	Architectural Feature (As identified in a Cultural Resources Survey Report (AAR, 2012; See Note 4)
A A'	Cross-Section Location

I Excavation side slopes will extend within FHWA Property to access contaminated soil in the northern portion of the Potlatch Property. A minimum 10-foot off-set will be maintained between the excavation and Forest Highway No. 50.

II Excavation side slopes will extend within Bentcik Property to access contaminated soil in the eastern portion of the Potlatch Property.

III Excavate backfill/ rip-rap placed during EPA's 2012 Removal Action to access underlying contaminated soil.

Notes

1. Active utilities located within/adjacent to the excavation areas such as the existing community sewer line will require temporary relocation. Upon completion of the removal action, all disturbed utilities will be returned to their original location or as agreed to by the utility owner.
2. Silt curtain will be deployed in the St. Joe River during remedial excavation activities along the Potlatch Property Shoreline.
3. Overburden Soil/Slope armor (Rip-Rap) will be removed as necessary to access contaminated soil.
4. An archeological monitor will be present to document the layout, construction and engineering of the identified architectural features located within limits of excavation prior to removal.
5. The locations of all features shown are approximate.
6. This drawing is for information purposes. It is intended to assist in showing features discussed in an attached document. GeoEngineers, Inc. cannot guarantee the accuracy and content of electronic files. The master file is stored by GeoEngineers, Inc. and will serve as the official record of this communication.

Reference: Existing topographic contours, property boundaries, site features including concrete surfaces, existing trees, utilities and other miscellaneous features shown on this figure are based on Meckel Enginineering & Surveying survey file dated May 24, 2012 and September 25, 2012.

Removal Action Plan

Avery Landing Site
Avery, Idaho

GEOENGINEERS

Figure 4

P:\2\2315016\02\CAD\WORKPLAN FIGURES\2315016-02 FIG 4 REMOVAL ACTION PLAN.DWG\TAB:LANDSCAPE MODIFIED BY TMICHAUD ON FEB 27, 2013 - 17:08

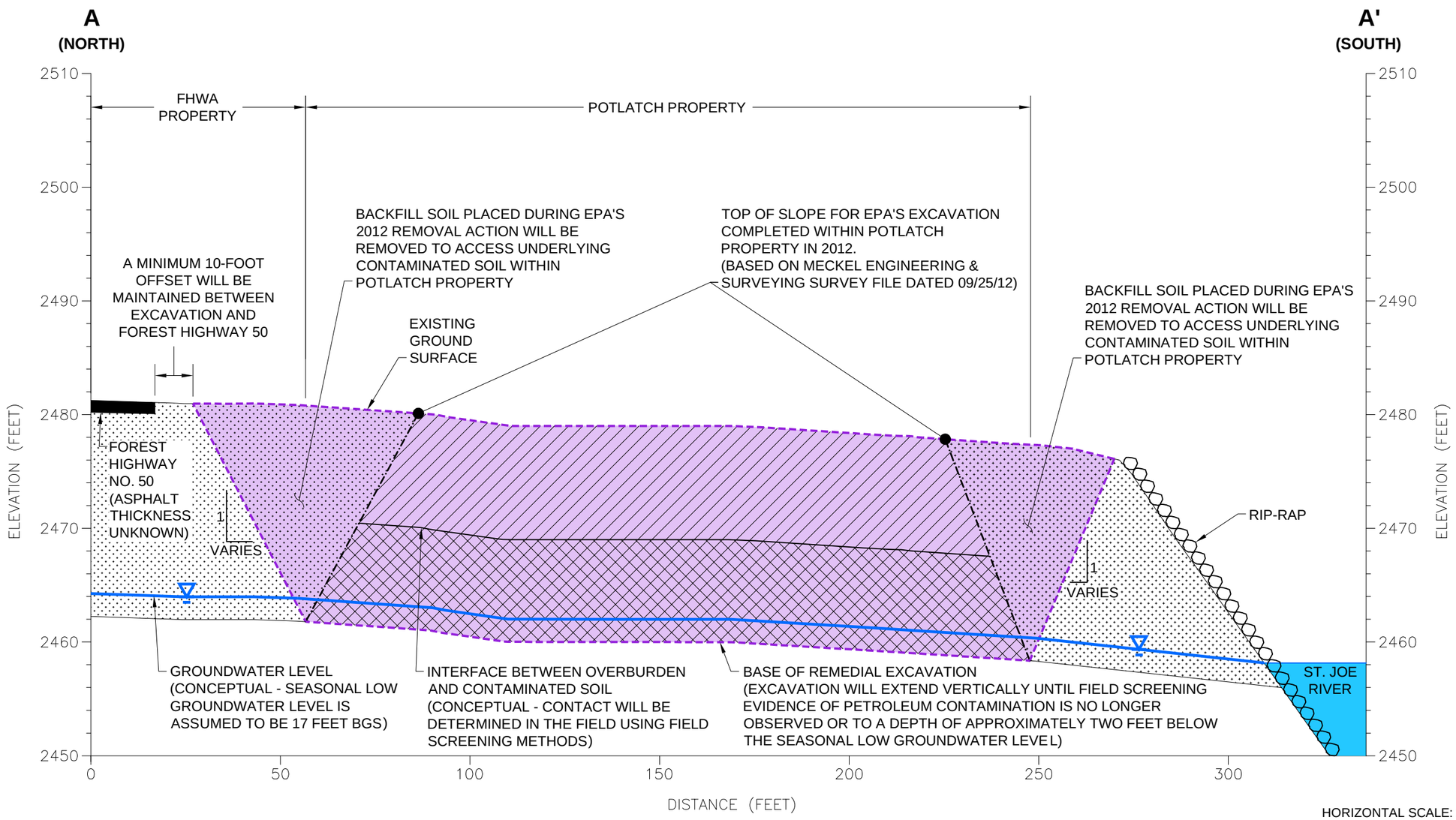

HORIZONTAL SCALE: 1"= 30'
VERTICAL SCALE: 1"= 10'
VERTICAL EXAGGERATION: 3X

30 0 30
FEET

Notes

1. The locations of all features shown are approximate.
2. This drawing is for information purposes. It is intended to assist in showing features discussed in an attached document. GeoEngineers, Inc. cannot guarantee the accuracy and content of electronic files. The master file is stored by GeoEngineers, Inc. and will serve as the official record of this communication.

Reference: Existing topography, property boundaries, and site features including asphalt surfaces shown on this Figure are based on Meckel Enginineering & Surveying survey file dated May 24, 2012 and September 25, 2012.

Legend

- Maximum Expected Limits of Remedial Excavation
- Excavation Side Slopes of EPA's 2012 Removal Action/ Restoration (Slope Assumed)
- Backfill Soil Placed during EPA's 2012 Removal Action
- Overburden Soil
- Contaminated Soil
- BGS — Below Ground Surface

Cross-Section A-A'

Avery Landing Site
Avery, Idaho

GEOENGINEERS

Figure 5

P:\2\2315016\02\CAD\WORKPLAN FIGURES\231501G-02 FIG 5-6 CROSS-SECTIONS.DWG\TAB:CROSS-SECTION AA MODIFIED BY TMICHAUD ON FEB 27, 2013 - 17:09

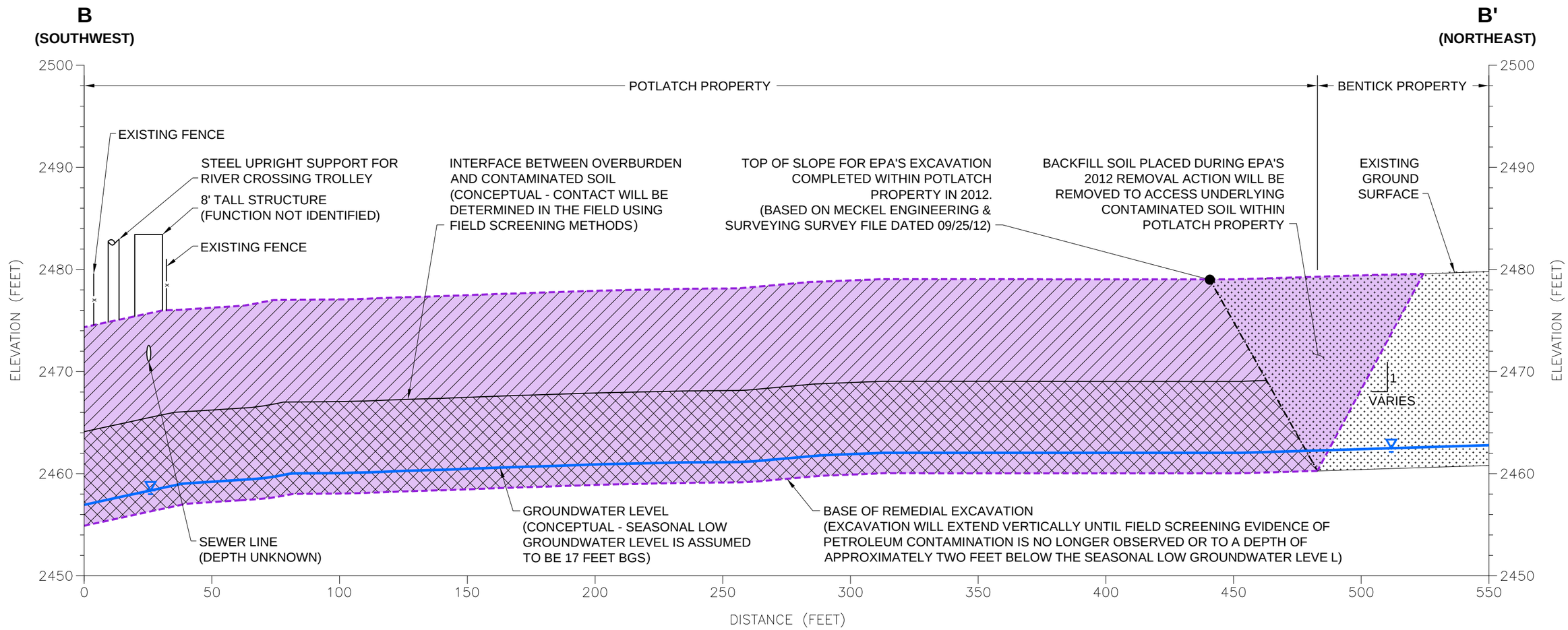

HORIZONTAL SCALE: 1"= 40'
VERTICAL SCALE: 1"= 10'
VERTICAL EXAGGERATION: 4X

40 0 40
FEET

Notes

1. The locations of all features shown are approximate.
2. This drawing is for information purposes. It is intended to assist in showing features discussed in an attached document. GeoEngineers, Inc. cannot guarantee the accuracy and content of electronic files. The master file is stored by GeoEngineers, Inc. and will serve as the official record of this communication.

Reference: Existing topography, property boundaries, and site features including asphalt and utilities shown on this Figure are based on Meckel Enginineering & Surveying survey file dated May 24, 2012 and September 25, 2012.

Legend

- Maximum Expected Limits of Remedial Excavation
- Excavation Side Slopes of EPA's 2012 Removal Action/ Restoration (Slope Assumed)
- Backfill Soil Placed during EPA's 2012 Removal Action
- Overburden Soil
- Contaminated Soil
- BGS — Below Ground Surface

Cross-Section B-B'

Avery Landing Site
Avery, Idaho

GEOENGINEERS

Figure 6

P:\2\23150\16\02\CAD\WORKPLAN FIGURES\23150\16-02 FIG 5-6 CROSS-SECTIONS.DWG\TAB:CROSS-SECTION BB MODIFIED BY TMICHAUD ON FEB 27, 2013 - 17:09

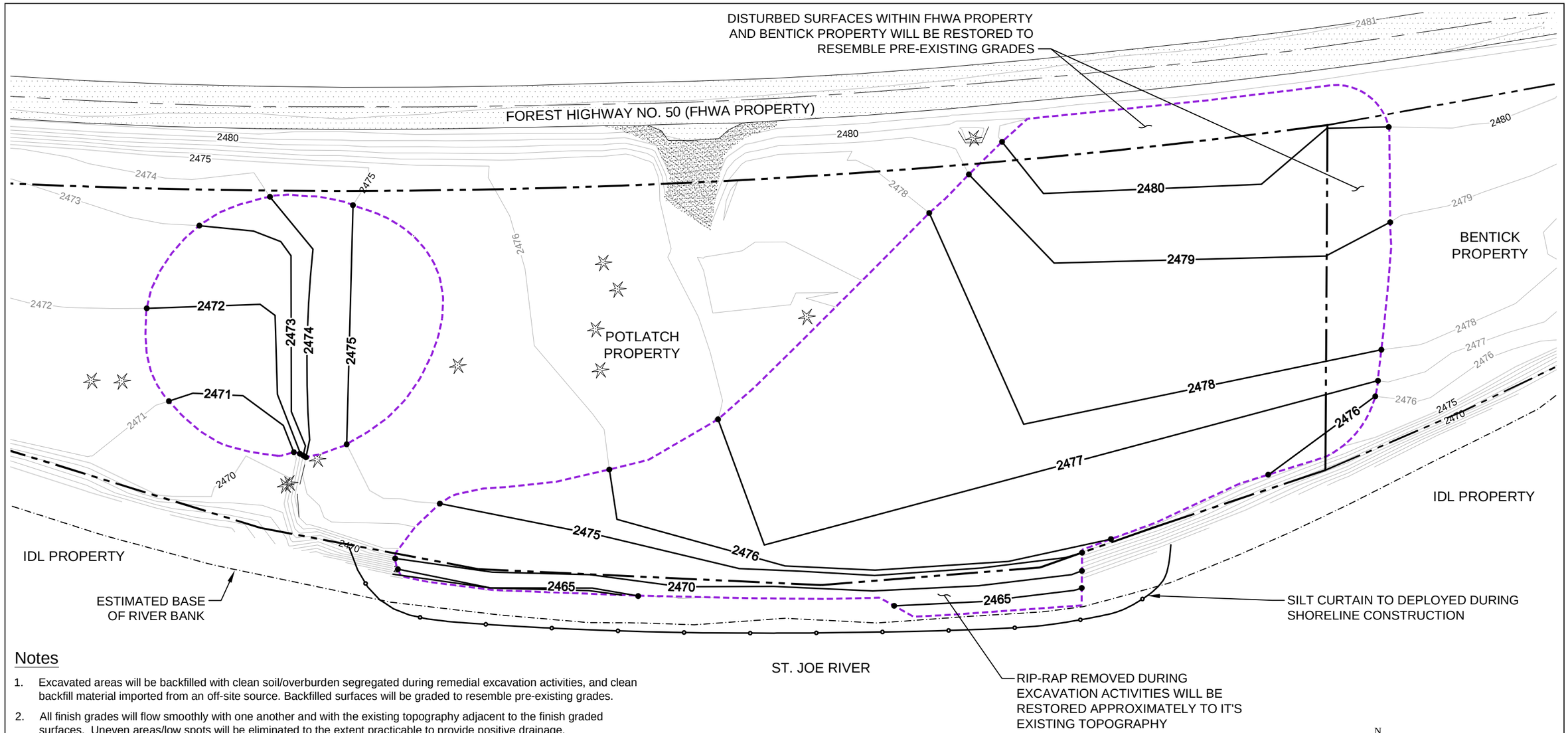

Notes

1. Excavated areas will be backfilled with clean soil/overburden segregated during remedial excavation activities, and clean backfill material imported from an off-site source. Backfilled surfaces will be graded to resemble pre-existing grades.
2. All finish grades will flow smoothly with one another and with the existing topography adjacent to the finish graded surfaces. Uneven areas/low spots will be eliminated to the extent practicable to provide positive drainage.
3. Silt curtain will be deployed in the St. Joe River during restoration activities along the Potlatch Shoreline. Silt curtain will be removed following the completion of Potlatch Property Shoreline restoration.
4. Following the completion of grading, areas disturbed on Potlach Property due to construction including backfilled excavation areas will be seeded to provide permanent cover. In addition, 15 feet wide area landward of the restored rip-rap on Potlatch Property will be re-vegetated with native plant species and may include native trees such as western larch (Larix occidentalis), black cottonwood (Populus trichocarpa), and Douglas fir (Pseudotsuga menziesii) and shrubs such as snowberry (Symphoricarpos albus), red-osier dogwood (Cornus stolonifera), and western serviceberry (Amelachier alnifolia). Willow whips (Salix species) will be inserted within the restored rip-rap.
5. Trees will be planted on 15-foot centers and shrubs will be planted on 5-foot centers.
6. The locations of all features shown are approximate.
7. This drawing is for information purposes. It is intended to assist in showing features discussed in an attached document. GeoEngineers, Inc. cannot guarantee the accuracy and content of electronic files. The master file is stored by GeoEngineers, Inc. and will serve as the official record of this communication.

Reference: Existing topographic contours, property boundaries, site features including asphalt/concrete/gravel surfaces, existing trees and underground utilities are based on Meckel Enginineering & Surveying survey file dated May 24, 2012 and September 25, 2012.

Legend

	Property Line
	Expected Limits of Backfill (See Note 1)
2480	Existing Topographic Contours (Feet - NAVD 88)
2480	Proposed Grade Contours (Feet - NAVD 88), (See Note 2)
	Silt Curtain (See Note 3)
IDL	Idaho Department of Lands
FHWA	Federal Highway Administration

Grading and Restoration Plan

Avery Landing Site
Avery, Idaho

GEOENGINEERS

Figure 7

P:\2\23150\16\02\CAD\WORKPLAN FIGURES\23150\16-02 FIG 7 GRADING AND RESTORATION PLAN.DWG\TAB:LANDSCAPE MODIFIED BY TMICHAUD ON FEB 27, 2013 - 17:10

FIGURE 8 WAVEIONICS™ EC
Treatment Equipment Layout
Start-up Sampling (PH.1)

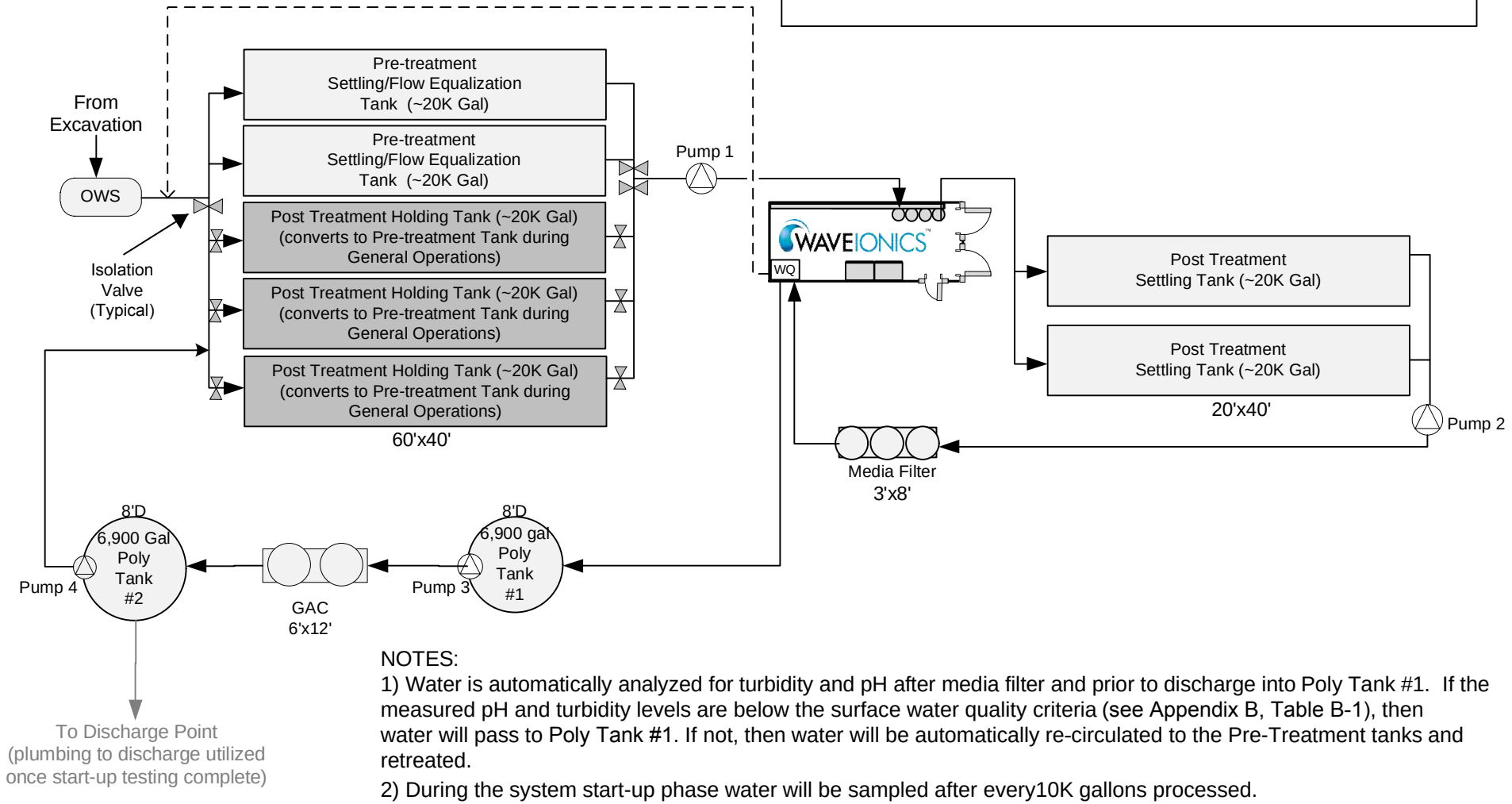

NOTES:

1) Water is automatically analyzed for turbidity and pH after media filter and prior to discharge into Poly Tank #1. If the measured pH and turbidity levels are below the surface water quality criteria (see Appendix B, Table B-1), then water will pass to Poly Tank #1. If not, then water will be automatically re-circulated to the Pre-Treatment tanks and retreated.

2) During the system start-up phase water will be sampled after every10K gallons processed.

3) Isolation Valves will be installed during system set-up and used during the start-up phase to segregate the holding tanks. The valves will be open during General Operations Phase 2 to meet pre-treatment detention and flow equalization needs.

4) Actual placement of components may differ based on site constraints. Flow path through the system will remain the same.

Client: PACIFIC PILE & MARINE	
Project: Avery Landing (aka Potlatch Clean-up)	
Date: 4/8/2013	Rev: 2
By: L.Doty	WATERTECTONICS

FIGURE 9 WAVEIONICS™ EC
Treatment Equipment Layout
General Operations (PH.2)

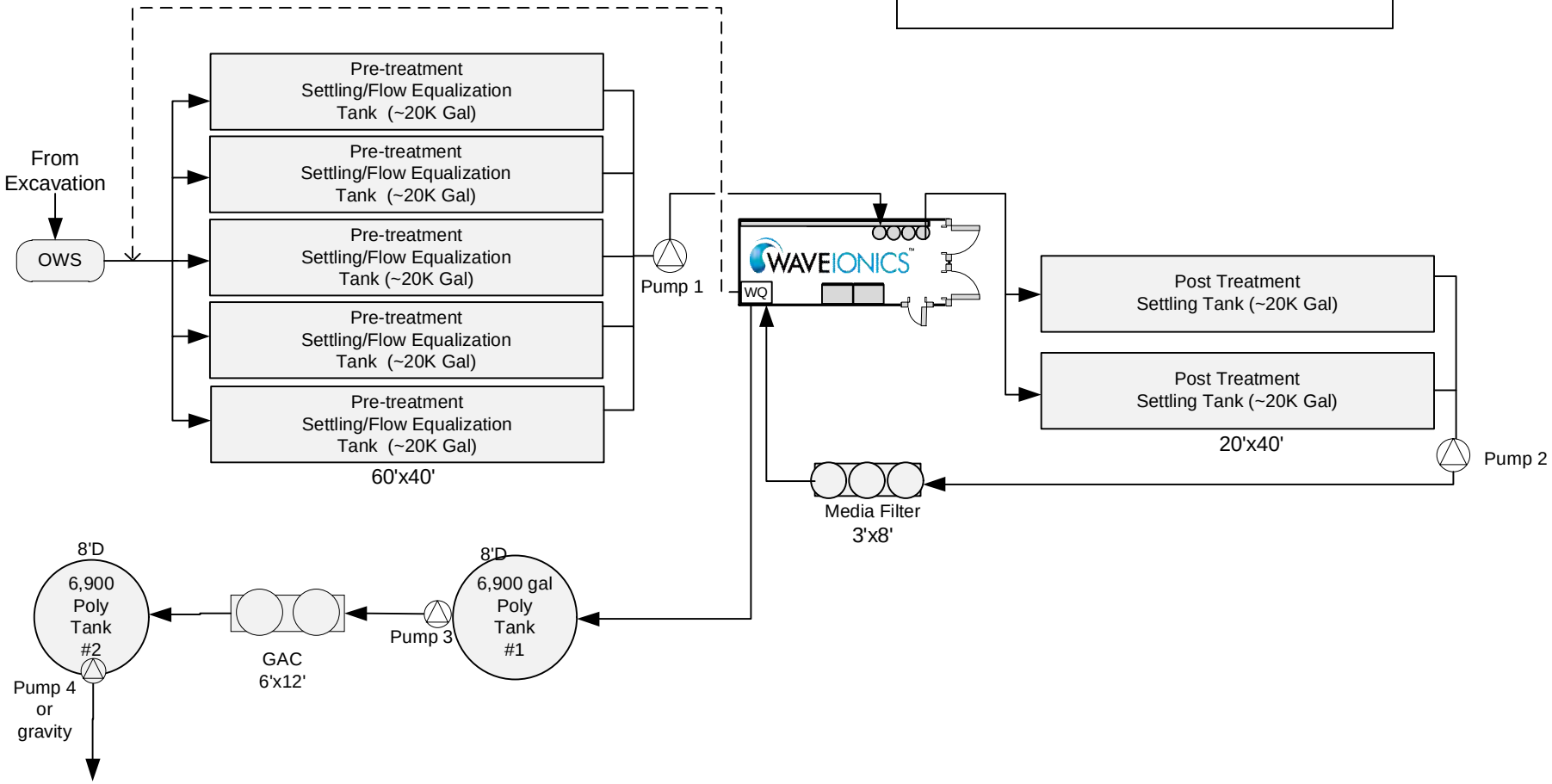

NOTES:
1) Water is automatically analyzed for turbidity and pH after media filter and prior to discharge into Poly Tank #1. If the measured pH and turbidity levels are below the surface water quality criteria (see Appendix B, Table B-1), then water will pass to Poly Tabk #1. If not, then water will be automatically re-circulated to the Pre-Treatment tanks and retreated.
2) Actual placement of components may differ based on site constraints. Flow path through the system will remain the same.

Client: PACIFIC PILE & MARINE	
Project: Avery Landing (aka Potlatch Clean-up)	
Date: 4/8/2013	Rev: 3
By: L.Doty	WATERTECTONICS

APPENDICES

GeoEngineers

APPENDIX A
Quality Management Plan

Quality Management Plan

Avery Landing Site
Avery, Idaho

for
U.S. Environmental Protection Agency on Behalf of Potlatch Land and Lumber, LLC

May 13, 2013

GeoEngineers

Plaza 600 Building
600 Stewart Street, Suite 1700
Seattle, Washington 98101
206.728.2674

Quality Management Plan

Avery Landing Site
Avery, Idaho

File No. 2315-016-02

May 13, 2013

Approvals:

Signature: Date: May 13, 2013

John M. Herzog, PhD, Principal, GeoEngineers

Signature: Date: May 13, 2013

Robert S. Trahan, Environmental Geologist, GeoEngineers

Signature: Date: May 13, 2013

Mark J. Lybeer, Quality Assurance Leader, GeoEngineers

RST:JMH:csv

Disclaimer: Any electronic form, facsimile or hard copy of the original document (email, text, table, and/or figure), if provided, and any attachments are only a copy of the original document. The original document is stored by GeoEngineers, Inc. and will serve as the official document of record.

Copyright© 2013 by GeoEngineers, Inc. All rights reserved.

GeoEngineers

Table of Contents

1.0 INTRODUCTION A-1

1.1. Mission Statement and Core Values A-1
1.1.1. Purpose A-1
1.2. Ethics Policy A-2
1.3. Commitment to Quality A-2

2.0 PROJECT MANAGEMENT AND ORGANIZATION A-3

3.0 QUALITY SYSTEM COMPONENTS A-3

4.0 PERSONNEL QUALIFICATION AND TRAINING A-5

5.0 PROCUREMENT OF ITEMS AND SERVICES A-6

6.0 DOCUMENTATION AND RECORDS A-6

6.1. Project Records A-6
6.2. Project Documents A-7

7.0 COMPUTER HARDWARE AND SOFTWARE A-8

8.0 PLANNING A-8

9.0 IMPLEMENTATION OF WORK PROCESSES A-9

10.0 ASSESSMENT AND RESPONSE A-10

11.0 QUALITY IMPROVEMENT A-10

12.0 REFERENCES A-11

ATTACHMENTS

Attachment A-1. Resumes

RECORD OF AMENDMENTS

Revision	Author	Date	Comments
1	Robert Trahan	4/8/2013	Updated in response to EPA review comments. Updated document date, personnel on approvals page and references listed in Section 12.0.

1.0 INTRODUCTION

This Quality Management Plan (QMP) documents GeoEngineers quality system for planning, implementing, documenting, and assessing the effectiveness of activities to support environmental activities for the removal action being performed by the Potlatch Land and Lumber, LLC (Potlatch) at the Avery Landing Site (Site) located in Avery, Idaho. Environmental activities include implementation of an Environmental Protection Agency (EPA) directed removal action, review of data results and interpretation of chemical and/or physical measurements relating to the environment. Implementing a comprehensive QMP is necessary to ensure that accurate environmental data are available to support the decision process. GeoEngineers, Inc. (GeoEngineers) is committed to quality assurance (QA) and quality control (QC) practices, and incorporating them into environmental studies and activities. These practices enable GeoEngineers to generate accurate data in a cost-effective manner.

This QMP has been prepared to meet EPA requirements, described in document QA/R-2, EPA Requirements for Quality Management Plans dated March 2001 (EPA, 2001). EPA requirements are based on the national consensus standard, ANSI/ASQ E4-2004, Quality Systems for Environmental Data and Technology Programs – Requirements with Guidance for Use (ANSI/ASQ, 2004). This QMP outlines the guidelines and practices that lead to effective planning and execution of environmental studies, and describes procedures for reporting QA/QC activities. It applies to the work performed by GeoEngineers that involves acquiring environmental data generated from direct measurement activities or from existing data (i.e., collected from other sources, or compiled from computerized databases and information systems).

1.1. Mission Statement and Core Values

GeoEngineers operates on the fundamentals defined by our purpose, overarching goals and core values. The fundamentals are defined as followed.

1.1.1. Purpose

We Find a Better Way to apply the earth science and technology to improve the world we live in.

1.1.1.1. OVERARCHING GOALS

- A Reputation of Excellence: Where our name connotes the standard of technical and professional excellence in our areas of practice.
- Growth through Leadership: Where we lead to expand opportunities for ourselves and our clients throughout the world.

1.1.1.2. CORE VALUES

- We think **safety** first.
- We deliver **unparalleled service** to our clients.
- We demonstrate **absolute integrity** in all we do.
- We achieve **technical excellence** in our operations and work products.
- Internal and external **teamwork** is essential for the success of our clients and our company.

- **Caring and respect** define our culture.
- We are committed to **broad, internal ownership** of GeoEngineers.
- Our **profitability** generates attractive financial rewards for our shareholders and our employees.
- We seek and **embrace opportunity** for our staff and our company.

1.2. Ethics Policy

GeoEngineers is committed to conducting business in an honest and ethical manner. The centerpiece of our core values is demonstrating absolute integrity in all that GeoEngineers does. This is communicated to every new employee, is a component of annual performance reviews and is carefully monitored by our executive management team. To a great extent, GeoEngineers relies on the individual behavior and choices of each employee. Therefore, great care is taken to hire and retain individuals that recognize and have demonstrated ethical practice. Every person employed by GeoEngineers is expected to follow all applicable laws, regulations and company policies that govern his or her work. However, their responsibility to ethical practice goes beyond that. Employees are also the company's eyes and ears. Asking questions and raising concerns when an employee is unsure if something is not right is vital to maintaining our integrity.

GeoEngineers ethics policy is intended to inform our employees, Board members, and third parties of the way GeoEngineers and its subsidiaries are expected to conduct business. When employees have any ethical question, they are expected to seek advice from their supervisor, a Principal Business Unit Leader and/or Human Resources. The raising of ethical concerns is encouraged at GeoEngineers. This requires the commitment and dedication of every employee. Employees are expected to follow the letter and spirit of:

- Company guidance and policy;
- Applicable international, federal, state and local laws/regulations; and
- Integrity, honesty and fairness.

1.3. Commitment to Quality

GeoEngineers' core values include providing unparalleled service to our clients, demonstrating absolute integrity in all we do and achieving technical excellence in our operations and work products. In order to establish and enhance our reputation as the leading provider of consulting and engineering services, we are committed to satisfying our clients' expectations for quality and meeting the statutory and regulatory requirements applicable to our work. GeoEngineers is continually seeking to improve the effectiveness of our Quality Management System (QMS). GeoEngineers compares our QMS against the best management practices employed within our profession. We:

- Strive to continually improve the level of satisfaction that our clients experience with the quality of our services and work products;
- Strive to ensure that our technical competencies, quality management practices, and QMS remain appropriate for the types of services and work products that we provide our clients;

- Comply with applicable legal and ethical requirements, safety requirements, and financial management requirements, as well as the quality requirements mutually agreed upon with our clients or established within our corporate operational practices;
- Provide the budgetary support and resources necessary to effectively implement and continually refine our QMS; and
- Periodically evaluate the quality of our professional performance and the effectiveness of our QMS, and based on such evaluations, establish and update reasonable, relevant, achievable, and economically feasible objectives for improvement.

2.0 PROJECT MANAGEMENT AND ORGANIZATION

In general, the achievement of required levels of quality in the services and work products offered is the shared responsibility of the technical staff performing the work. The project organization facilitates the efficient production of project work, allows for an independent quality review, and permits resolution of any QA issues. Descriptions of the responsibilities, lines of authority and communication for the key positions providing QA and QC for the Avery Landing Site Removal Action summarized in the Quality Assurance Project Plan (QAPP) presented in Appendix C off the Avery Landing Removal Action Work Plan (Work Plan; GeoEngineers, 2013). Qualifications of key individuals with GeoEngineers for the Avery Landing Removal Action project are included in Attachment A.

3.0 QUALITY SYSTEM COMPONENTS

GeoEngineers quality system is comprised of multiple elements to ensure that the services and deliverable work products provided by GeoEngineers meet or exceed expectations for quality, and address all applicable contractual and regulatory requirements, within the boundaries of established, technically defensible engineering practices. The principal elements of GeoEngineers quality system include:

- **Management Review** – Periodic reviews are conducted to ensure the continued suitability, adequacy, and effectiveness of the QA program.
- **Contracts and Proposals** – Contracts and proposals are reviewed for negotiating appropriate scopes of work and contractual terms and conditions for awarded projects or task orders.
- **Independent Technical Review** – Independent technical reviews of technical reports and other deliverable project documents are completed to ensure accuracy and precision of the work product.
- **Preparation, Review, Approval, and Update of Quality and Technical Procedures** – The preparation, review, approval, and update of GeoEngineers quality and technical procedures is completed, as appropriate, to ensure the continued suitability, adequacy, and effectiveness of the QA program.
- **Design Control** – Design control is managed to ensure the continued suitability, adequacy, and quality of design work products (e.g., engineering drawings, specifications, or sketches).

- **Field and Subcontractor Inspection** – Inspections of field, laboratory, or office activities are conducted periodically for projects conducted by GeoEngineers.
- **Calibration, Control and Maintenance of Measuring and Test Equipment** – GeoEngineers-owned measuring and test equipment used in field and laboratory investigations is calibrated, controlled, and maintained in general accordance with the manufacture's recommendations.
- **Corrective and Preventive Action** – Corrective and preventive action is initiated by GeoEngineers in response to externally or internally reported non-conformances.
- **Training** – GeoEngineers personnel receive relevant and appropriate levels of training to support the completion of their project assignments.

In addition to the quality system elements listed above, project-specific plans are developed to ensure a high level of services and deliverable work product. Project-specific plans include:

- **Work Plan** –The work plan describes the overall project and provides details on the specific project tasks that will be completed.
- **Site Specific Sampling Plan (SSSP)** – The SSSPs serves as the primary guide for operating procedures for field work to be performed.
- **Quality Assurance Project Plan (QAPP)** – The QAPP presents the objectives, procedures, organization, and specific quality assurance and quality control activities designed to achieve data quality goals established for the project. Environmental measurements will be conducted to produce data that are scientifically valid, of known and acceptable quality and that meet established objectives. QA/QC procedures will be implemented so that the precision, accuracy, representativeness, completeness and comparability of the data generated meet the specified data quality objectives.
- **Health and Safety Plans (HASP)** – This plan is to be used by GeoEngineers personnel if the field work entails potential exposures to contaminants or unusual situations. All plans are to be used in conjunction with current standards and policies outlined in the GeoEngineers Health and Safety Program Manual.

Project decisions, conclusions, and recommendations resulting from environmental data collection will be based upon verified (validated) data. The purpose of data verification is to ensure that data used for subsequent evaluations and calculations are scientifically valid, of known and documented quality, and legally defensible. Field data verification will be used to eliminate data not collected or documented. Laboratory data verification will be used to eliminate data not obtained using prescribed laboratory procedures. The QA Leader will validate data collected from the field investigation to ensure that the data are valid and usable. The data quality assessment will help to achieve an acceptable level of confidence in the decisions that are to be made based upon the project data. Data will be validated in general conformance with EPA functional guidelines for data validation (EPA, 2008, 2009 and 2010). The results of the data quality assessment will be documented in a written report prepared to document the overall quality of the data relative to the data quality objectives defined by the QAPP.

4.0 PERSONNEL QUALIFICATION AND TRAINING

GeoEngineers integrates a suite of services for managing the earth's resources. Since our founding in 1980, GeoEngineers has successfully completed more than 30,000 projects worldwide for clients in the Energy, Transportation, Water and Natural Resources, Development and Federal markets. Our specific capabilities include:

- **Environmental Site Assessment and Remediation** – Site assessments and characterization, feasibility studies, risk assessments, remediation and cleanups.
- **Geotechnical** – Site selection, foundations, ground stabilization, erosion control, geophysical investigation, seismic analyses, numerical modeling, special inspection and testing and construction monitoring.
- **Geologic** – Coastal, fluvial, and upland geomorphology, geologic hazards, critical area ordinances, sand and gravel mine evaluations and forest practice applications.
- **Water Resources** – Groundwater, water supply, water rights, watershed, hydrogeology, water quality, wellhead protection, storm water, aquifer analysis, dewatering and modeling.
- **River and Stream Management** – Hydrology, bank stabilization, engineered logjams, channel migration and sediment transport.
- **Ecological** – Fisheries science, wetlands delineation and mitigation, wildlife, nearshore, marine, habitat restoration, riparian corridors, subtidal habitat and river engineering evaluations.
- **Permitting** – Endangered Species Act, Clean Water Act, National Environmental Policy Act, State Environmental Policy Act and other regulatory issues.
- **Planning** – Land use, geologic hazard reduction, siting studies and regulatory interpretation.
- **Geospatial and GIS** – Data collection, analyses, map integration and remote sensing (including LiDAR terrain modeling).

GeoEngineers staff maintains the necessary certifications and registrations required for the projects we work on, including professional engineers, licensed geologists and engineering geologists, a certified fisheries professional, certified floodplain managers, and professional wetland scientists. All GeoEngineers professionals in the principal, associate, senior and engineer/scientist 2 labor categories must be registered in their field of practice, if registration is available, in the State in which the individual practices. All professionals, regardless of professional level, are encouraged to become registered as soon as possible after meeting the eligibility requirements.

All GeoEngineers employees partake in an annual review process. A portion of the review process is aimed at ensuring the employee maintains the requirements and exceeds the minimum level of expertise for the license(s) they possess. The annual review process includes: 1) documenting employee's needs to maintain professional license(s), certification(s), accreditation(s) or other obligations; 2) identifying the needs of the employee to maintain the requirements of the professional license(s), certification(s), accreditation(s) or other obligations; 3) ensuring that the

employee has the required training to maintain the professional license(s), certification(s), accreditation(s) or other obligations.

GeoEngineers places a strong emphasis on helping all staff develop the skills and understanding of the systems needed to effectively manage complex projects involving multiple technical disciplines and/or office locations. Each of our technical staff participated in a Skills, Experience, Excellence Development (SEED) training course when they arrive at GeoEngineers, and safety training courses. GeoEngineers staff undergoes training by our Health and Safety Manager to ensure each task and activity with safety in mind.

5.0 PROCUREMENT OF ITEMS AND SERVICES

GeoEngineers subcontracts with analytical laboratories that are compliant with our prime contract terms to perform chemical analysis of environmental samples collected. Analytical laboratories comply with Standard Operating Procedures (SOPs) to provide legally defensible analytical data that meet project and regulatory requirements. Laboratories that will be used are accredited for the specific analysis being requested. As needed, subcontracted laboratories contract with other laboratories to perform analyses that they are unable to perform. Data from analyses performed are reviewed by the subcontracted laboratory to ensure the quality of data meets the projects needs and complies with project and regulatory requirements. Specific performance requirements (e.g. reporting limits, turnaround time, and sample delivery schedules) for the laboratory are included in the task specific QAPPs following coordination with the laboratory.

Measuring and testing equipment used in field and laboratory investigations not owed by GeoEngineers are acquired, as needed, to complete the specified scope of work. Equipment is checked upon receipt to ensure proper function and calibration prior to use.

6.0 DOCUMENTATION AND RECORDS

GeoEngineers maintains a rigorous internal QA/QC program that is applied to all field studies, data collection, data analysis, report preparation, laboratory analysis and design efforts. The application of the quality management procedures is managed by the Project Manager and the ultimate responsibility is allocated to the Principal or Associate in charge of the project. Our hard copy and electronic project files, including data and documents, are keyed, managed and archived by the project number. All electronic and hard copy files are maintained at the local office level. Electronic files from each office location are copied to our corporate data storage facility for data security and daily backup. In addition, all offices have ready access to all electronic project files on SharePoint through secure internet connections.

6.1. Project Records

Project records are defined as completed, legible documents, in hard copy and/or electronic format that furnish evidence of the satisfactory completion of the required contractual or task order-specific scope of work as well as the quality of the services or work products provided. Project records are maintained and organized in discrete project- and task order-specific files. Project

records are physically/electronically isolated from work in process or draft/working versions of documents and at a minimum include:

- As-submitted proposal(s), the approved Master Service Agreement, all Task Orders and any addenda or modifications thereto;
- Professional resumes for all staff assigned to the project;
- Purchase orders, subcontracts, and any modifications;
- Incoming and outgoing correspondence (including e-mail) that affects project scope, schedule, budget, or quality, or that addresses environmental or occupational health and safety issues associated with the project;
- Meeting attendance sheet(s) and minutes for client meetings;
- Draft and final deliverable work products, with transmittal forms;
- Field or laboratory test data, and measuring and test equipment calibration/maintenance records;
- Project specific chain of custody documents;
- Internal surveillance inspection and audit reports;
- Client audit documentation, as provided;
- Completed Corrective/Preventive Action Requests from any external or internal audits/surveillances; and
- Completed annual management review documentation.

Unless otherwise directed by the client or GeoEngineers' corporate counsel, records are retained for a period of 10 years, after which they may be archived or (if specifically authorized by the client or corporate counsel) destroyed.

6.2. Project Documents

The development, review and circulation of written deliverables are documented using a "Correspondence Checklist" (CCL). The CCL documents: 1) senior level review and approval of the deliverable; 2) file numbers for hard copy and electronic filing and archiving; 3) a review check-off list for all components of the document; 4) distribution method (PDF, email, fax, mail, etc.); and 5) a final Quality Control Checklist.

The QA/QC steps for deliverable production are as follows:

- All sections of the CCL are completed (whether draft or final).
- The different people who review a report initial in the corresponding section (e.g., Principal or Project Manager review). Sections that do not apply are crossed out.
- In accordance with GeoEngineers' Policy on Signatory Authority, Principal/Associate review/approval is required and the Principal/Associate providing that review initials the CCL.
- All the necessary signatures are obtained before the report is sent out.

- The Table of Contents (if used) is checked to make sure the document headings, tables, figures and appendices correspond with the Table of Contents.
- To reduce the risk that the wrong, figures, analytical data or other appendix data are used, the Project Manager or Project Coordinator collects the figures, data and appendices and verifies that they are correct and provides them for quality control check with the rest of the report before final copy or PDF production.
- A Quality Control Checklist is used by the Project Manager and Project Coordinators to ensure that the document is complete and ready to go.
- The Project Coordinator completes a final QA/QC on the report before copying and alerts the Project Manager of any problems there may be with the report.
- After the QA/QC process, the report is copied, collated and bound (if necessary). A hard copy is placed in our Originals filing. A scanned copy is placed in the SharePoint Client folder.

7.0 COMPUTER HARDWARE AND SOFTWARE

The quality of hardware and software used by GeoEngineers is addressed in Information Technologies (IT) policies and guidance, which can be accessed through GeoEngineers' Intranet. GeoEngineers "Acceptable Use Policy" outlines the acceptable use of computer equipment and communications at GeoEngineers. These rules are in place to protect the employee and GeoEngineers to minimize the risks of virus attacks, compromising of network systems and services, and legal issues. Effective security is a team effort involving the participation and support of every GeoEngineers employee and affiliate who deals with information and/or information systems. Internet/Intranet/Extranet-related systems, including but not limited to computer equipment, software, operating systems, storage media, network accounts providing electronic mail, World Wide Web browsing, and FTP, are the property of GeoEngineers. These systems are to be used for business purposes in serving the interests of the company, and of our clients and customers in the course of normal operations.

Specific policies on or related to the quality of computer hardware and software are posted under Information Technology on GeoEngineers' Intranet.

8.0 PLANNING

To ensure delivery of high-quality work products and services, GeoEngineers utilizes the general concepts outlined in the EPA Data Quality Objectives (DOQ) Process to: 1) evaluate the problem; 2) identify the goals of the project; 3) identify information inputs; 4) define the project boundaries; 5) develop an analytic approach; 6) specify performance criteria; 7) develop a plan for obtaining data; and 8) utilizing data obtained to set project specific goals. The DQO process enables the project manager, in coordination with the QA leader, to set performance or acceptance criteria for environmental data.

Documentation of field sampling data will be reviewed for conformance with project QC requirements described in site specific QAPPs. At a minimum, field documentation will be checked for proper documentation of the following:

- Sample collection information (i.e., date, time, location, matrices, etc.);
- Field instruments used and calibration data;
- Sample collection protocol;
- Sample containers, preservation, and volume;
- Field QC samples collected at the frequency specified;
- COC protocols; and
- Sample shipment information.

Sample receipt forms provided by the laboratory will be reviewed for QC exceptions. The final laboratory data package will describe (in the case narrative) the effects that any identified QC exceptions have on data quality. The laboratory will review transcribed sample collection and receipt information for correctness prior to delivering the final data package.

GeoEngineers evaluates specific task order requirements, and prepares appropriately detailed plans or instructions that address the project's scope of work; budgets and schedule; milestones, health and safety requirements, daily tailgate meeting requirements for field work; technical requirements and specific quality standards for field studies and laboratory testing; data analysis and report preparation; and other guidance as necessary to ensure acceptable and defensible quality in the work performed.

9.0 IMPLEMENTATION OF WORK PROCESSES

The Principal-In-Charge oversees the implementation of work process. To ensure that the collection of environmental data is of sufficient quality to meet project goals in a safe efficient manner and Technical/Field Staff are provided the following:

- All available information necessary to properly execute the work;
- Specific instructions for performing the work, with a level of detail commensurate with the nature of the work and the experience of the workforce;
- Descriptions of necessary material, equipment, and monitoring/measurement devices;
- Applicable quality procedure, technical procedure or other processes for monitoring and measurement of work product and service quality (including requirements for performing technical reviews on all draft and final deliverable work products; and
- Other information, as required, to fulfill the requirements of the scope of work.

Subcontracted analytical laboratories are responsible for following appropriate QA and QC procedures for handling and/or analyzing collected samples and reviewing analytical results to ensure that the QC requirements have been met.

10.0 ASSESSMENT AND RESPONSE

The effectiveness of the quality system is evaluated at a minimum on an annual basis using quality system audits, technical reviews, performance evaluations data quality assessments, technical system audits and surveillance. All field or laboratory activities conducted for GeoEngineers are evaluated using the methods described in Section 8.0 to determine whether data collection activities are implemented as planned and that the data are of the right type, quality, and quantity to support their intended use. The Principal-In-Charge is ultimately responsible for assuring that data quality assessment is done for each project that involves environmental data.

Appropriate corrective and preventative actions will be taken to eliminate the cause of a detected non-conformance or other undesirable situation directly observed, observed during inspections or from internal audits.

11.0 QUALITY IMPROVEMENT

The Project Manager in conjunction with the Principal-in-Charge is responsible for identifying, planning, implementing and evaluating the effectiveness of the quality improvement methods for individual projects. The quality improvement is achieved by assessing the effectiveness of the processes for collection and use of project related data, and by taking preventive and corrective actions to improve those processes. The preventative and corrective actions help ensure that conditions adversely impacting project quality are prevented or identified promptly, including determining the nature and extent of the problem, and corrected as soon as possible. Individual responsibilities, lines of authority and communication for the key positions providing QA and QC are described in Section 2.0. GeoEngineers follows a process for continuous improvement. During this process we are evaluating every step.

- Identify the potential problem – A problem that can negatively impact project quality can be identified by any employee or individual on the project team. Once a problem is identified the Project Manager is contacted. The Project Manager will determine other team members that need to be involved in the corrective action and will work with other project team members to generate solution through design.
- Implement the design solution – The Project Manager will incorporate the design solution into project related documents and communicate those changes to other project team members impacted by the change.
- Monitor the design solution – The Project Manager will monitor implementation and evaluate the implemented design solution.
- Adjust the design solution if necessary – The Project Manager will identify areas for improvement and make changes, if needed based on observations made during the Monitoring of the design solution step.

The Principal Business Unit Leader is ultimately responsible for the evaluation of quality improvement effectiveness within their region.

12.0 REFERENCES

American National Standards Institute/American Society for Quality (ANSI/ASQ), "Quality systems for Environmental data and Technology Programs – Requirements with Guidance for Use," Publication ANSI/ASQ E4-2004, dated 2004.

GeoEngineers, Inc., "Final Removal Action Work Plan, Avery Landing Site, Avery Idaho," GEI File No. 2315-016-02, prepared for U.S. Environmental Protection Agency on Behalf of Potlatch Land and Lumber, dated May 10, 2013.

United States Environmental Protection Agency (EPA). "USEPA Contract Laboratory Program National Functional Guidelines for Inorganic Superfund Data Review," EPA 540-R-04-004, Office of Superfund Remediation and Technology Innovation, US Environmental Protection Agency, Washington, DC, dated October 2010.

United States Environmental Protection Agency (EPA), "Guidance for Labeling Externally Validated Laboratory Analytical Data for Superfund Use," EPA 540-R-08-005, Office of Solid Waste and Emergency Response, US Environmental Protection Agency, Washington, DC, dated January 2009.

United States Environmental Protection Agency (EPA), "USEPA Contract Laboratory Program National Functional Guidelines for Superfund Organic Methods Data Review," EPA 540-R-08-01, Office of Superfund Remediation and Technology Innovation, US Environmental Protection Agency, Washington, DC, dated June 2008.

United States Environmental Protection Agency (EPA), "EPA Requirements for Quality Management Plans, EPA QA/R-2," United States Environmental Protection Agency Office of Environmental Information, Publication EPA/240/B-01/002, dated March 2001.

ATTACHMENT A-1
Resumes

JOHN HERZOG, PHD, LHG, PRINCIPAL

Education

Ph.D., Geological Sciences, University of Colorado, 1995
M.S., Geological Sciences, University of Colorado, 1993
B.S., Oceanography, University of Washington, 1989

Professional Registrations

Professional Licensed Geologist: Washington

Certifications & Training

40-Hour HAZWOPER
OSHA (8-Hour) HAZWOPER Refresher
First Aid/CPR
Transportation Worker Identification Credential (TWIC), Transportation Security Administration

Experience

John is a professional geologist with more than 15 years of professional experience in strategy development, cleanup studies, remedial design and remediation construction management for port clients. He has managed a broad range of waterfront-related cleanup and redevelopment projects, especially those with issues related to contaminated sediments, groundwater, soil and habitat restoration. John is an accomplished negotiator with a comprehensive understanding of the regulatory issues related to both the MTCA and CERCLA cleanup programs and at negotiating cleanup requirements with project trustees. His substantial experience and skill in devising practical applications to resolve scientific challenges enables him to effectively address crucial issues, and to meet the specific, distinctive needs of diverse port, public and private clients on cleanup and cost recovery projects.

- Port of Everett, Mill A (South Terminal Redevelopment); Everett, Washington
- Port of Everett, East Waterway Site Review; Everett, Washington
- Port of Anacortes, Former Scott Paper Mill Cleanup; Anacortes, Washington
- Port of Anacortes, Dakota Creek Shipyard Cleanup; Anacortes, Washington
- Port of Anacortes, Cap Sante Marine Cleanup; Anacortes, Washington
- Port of Anacortes, Former Shell Tank Farm Cleanup; Anacortes, Washington
- Port of Skagit County, Taxiway F Cleanup and Restoration; Burlington, Washington
- Lockheed Shipyard, Former Lockheed Shipyard Cleanup; Seattle, Washington
- Washington State Department of Ecology, Everett Asarco Lowlands; Everett, Washington

ROBERT TRAHAN, ENVIRONMENTAL GEOLOGIST

Education

M.S. Environmental Geosciences, Michigan State University
B.S. Geology, Washington State University

Certifications & Training

OSHA HAZWOPER, 40-hour Course
OSHA HAZWOPER, 8-hour Refresher Course
OSHA HAZWOPER Supervisor Course
First Aid/CPR
Certified Radiation Safety and Nuclear Moisture/Density Gauge Operation
Transportation Worker Identification Credential (TWIC), Transportation Security Administration

Experience

Robert has been an environmental geologist in Washington State since 2003. He is skilled in environmental site characterization field activities and cleanup monitoring as well as groundwater modeling data collection and analysis. Robert has completed soil, groundwater and surface water sampling following industry and regulatory sampling protocols, he has monitored excavations involving removal of impacted soil, segregation and sampling, and has developed efficient methods for documenting daily field activities. He is adept at implementing project plans and specifications and reviewing contractor requests for information. Robert has worked on project teams involving many design professionals and contractors and communicates well in the field with general and specialty contractors and owners. He has worked on transportation and infrastructure projects and is familiar with the health and safety aspects of construction and remediation.

- Port of Anacortes, Former Scott Paper Mill Cleanup; Anacortes, Washington
- Port of Anacortes, Dakota Creek Shipyard Cleanup; Anacortes, Washington
- Port of Anacortes, Cap Sante Marine Cleanup; Anacortes, Washington
- Port of Anacortes, Former Shell Tank Farm Cleanup; Anacortes, Washington
- Port of Skagit County, Taxiway F Cleanup; Burlington, Washington
- Port of Seattle, Terminal 115 North RI/FS; Seattle, Washington
- Bill & Melinda Gates Foundation, World Headquarters Campus Cleanup and Development; Seattle, Washington

MARK LYBEER, ENVIRONMENTAL DATA ANALYST

Education

B.S. Environmental Chemistry, University of Michigan, Dearborn, Michigan, 1996
Advanced Paralegal Certification, Edmonds Community College, Edmonds, Washington, 2008

Certifications & Training

Microsoft Access Levels I, II; and III New Horizons Computer Learning Centers
Managing Environmental Data with Microsoft Access training class; 2006

Experience

Mark Lybeer has more than 13 years of experience in analytical chemistry and environmental data management. He has intimate knowledge of the nuances between laboratory and field sampling procedures, and by extension, knowledge of the wide array of discrepancies that potentially arise in the entire life-cycle of a sample. Mark works extensively with the CLP-National functional Guidelines (organic, inorganic, and chlorinated dioxin/furan data review) and understands the factors that affect data quality and data usability. He has legal training in major Federal environmental laws including the Clean Air Act, RCRA, CWA, TSCA, and ESA. Mark's recent experience includes development and review of Quality Assurance Project Plans, performing data quality reviews, and performing formal data validation services. He also serves as the project laboratory contact/coordinator, and performs fuels chemistry fingerprinting and environmental forensics. Mark currently supports a wide range of environmental projects coordinating analytical chemistry aspects, analytical data validation and electronic data management.

In addition, Mark is part of GeoEngineers' environmental data management group, a collection of experts in data validation, analytical chemistry, database management, modeling, geographic information systems (GIS) and web-based data management tools. Mark's role in a project starts with helping define data quality objectives, selecting proper analytical methods, and selecting and coordinating with the laboratories. Laboratory results are received in a specified electronic data deliverable (EDD) format and Mark ensures compliance with the specification, loads the data, reviews the data quality, and creates many of the final outputs from our centralized database system. Mark's laboratory experience has also allowed him to emerge as a company-wide internal analytical consultant. His chemical expertise allows him to critique aspects of analytical data and provide solutions to his colleagues.

- Rayonier, Inc., Port Angeles Mill Environmental Remediation Services; Port Angeles, Washington
- New York State Department of Fish & Wildlife, Hudson River Watershed Project; New York
- The Lower Willamette Group, Portland Harbor Superfund Site; Portland, Oregon
- Port of Anacortes, Port-wide Environmental Remediation, Port of Anacortes, Washington
- Montrose Settlements Restoration Program, National Oceanic and Atmospheric Administration (NOAA); Various Sites, Southern California
- Thea Foss Waterway Allocation, National Oceanic and Atmospheric Administration (NOAA); Tacoma, Washington
- Port of Skagit County, Taxiway F Cleanup and Restoration; Burlington, Washington
- WSDOT, Harrison Wetland Site; Tacoma, Washington

ABHIJIT JOSHI, ENVIRONMENTAL ENGINEER

Education

M.S., Civil Engineering and Environmental Engineering, Texas A&M University
B.S., Civil Engineering, Sardar Patel University

Certifications & Training

OSHA HAZWOPER, 40-hour Course
OSHA HAZWOPER, 8-hour Refresher Course
First Aid/CPR
Transportation Worker Identification Credential (TWIC), Transportation Security Administration

Experience

Abhi has experience in large- and mid-sized environmental field projects, including contaminated soil and groundwater remediation, contaminated sediments and dredging. His experience has been gained overseeing construction actives on sites with multiple contaminated media and with a range of private and regulatory stakeholders. He has strong field-work presence with experience in multiple roles. Abhi is very good at solving logistical, construction-related problems and works well with project managers and subcontractors to provide solutions that are cost effective and meet client expectations. Abhi recently completed a project for a Port client where he was on site five to seven days a week for almost six months monitoring remedial excavation of approximately 86,000 cubic yards of petroleum contaminated soil and construction debris. This project also includes soil characterization for disposal and involved extensive dewatering activities to facilitate the excavation.

- University of Washington, Confidential U District Redevelopment Site Cleanup; Seattle, Washington
- Seattle Housing Authority, 12th Avenue EPA Brownfields Cleanup Site; Seattle, Washington
- Lake Union IV, LLC, Interurban Exchange 2 Redevelopment Project; Seattle, Washington
- Port of Anacortes, Former Scott Paper Mill Cleanup; Anacortes, Washington
- Port of Anacortes, Dakota Creek Shipyard Cleanup; Anacortes, Washington
- Port of Anacortes, Former Shell Tank Farm Cleanup; Anacortes, Washington
- Port of Skagit County, Taxiway F, Cleanup and Restoration; Burlington, Washington

PAUL D. ROBINETTE, ENVIRONMENTAL SCIENTIST, AQUATIC BIOLOGIST, GIS ANALYST

Education

A.A.S., Electronics Technology, Hallmark Institute of Technology
B.S., Aquatic Biology, Southwest Texas State

Software Expertise

ArcGIS Desktop (ArcView, ArcEditor, ArcInfo), ArcScene, ArcGlobe, 3D Analyst, Spatial Analyst, Sufer, Groundwater Modeling System, Microsoft Office (Access and VBA Proficient), EQuIS Chemistry/Geology, gINT, Trimble Hydropro, POS-MV Navigation Software

Certifications & Training

OSHA HAZWOPER, 40-hour Course
OSHA HAZWOPER, 8-hour Refresher Course
First Aid/CPR
Open Sea Survival Training
Hazardous Materials Handling and Shipping Training, USCG
Washington State Underground Storage Tank Site Assessor
Certified Radiation Safety and Nuclear Moisture/Density Gauge Operation
Trimble RTK positioning Training
gINT Certified
Confederation Mondiale des Activites Subaquatiques (CMAS) Scientific Diver
Scuba Schools International Advanced Open Water Instructor
Scuba Schools International Dive Specialty Instructor:

- Search and Rescue
- Deep Diving
- Dry Suit Diving

National Association of Underwater Instructors NITROX diver

Experience

Paul Robinette has performed biological, geotechnical and environmental consulting services since 1996. He has extensive field experience including projects in remote regions of Alaska. His environmental experience includes remedial investigations in soil, groundwater and surface water using a wide range of collection techniques, groundwater resource evaluations, aquatic investigations and delineation, and remediation of subsurface metals, PAH, petroleum and solvent-related soil and groundwater contamination. Paul has experience in surface water quality monitoring and analysis including turbidity, temperature, PH, salinity, dissolved oxygen and temperature. His biological experience includes eelgrass and macro algae delineation and diversity surveys, fish surveys utilizing visual monitoring, electrofishing, gill netting, snorkel and dive surveys. Biological experience is primarily in support of marine near shore construction, stream bank restoration, riparian corridor analysis, and stream relocations.

Paul's geotechnical experience includes monitoring site preparation, monitoring fill placement (including laboratory and field compaction tests using nuclear densometer and other equipment), monitoring utility trench excavation, bedding, backfill and compaction. He has also been responsible for monitoring foundation construction for buildings, roadway subgrades, utilities and other structures, monitoring erosion protection measures, and conducting field explorations (including reconnaissance, test pit excavations, and power boring methods). Paul also has extensive experience performing physical soils properties testing. Paul's laboratory experience includes performing a variety of primary and secondary

index and strength tests of soil, soil treated with admixtures, grout, and concrete. Paul's electronic data specialties include developing and applying geographic information systems (GIS), databases, and models to projects, including: modeling geologic and chemical hazards and developing sub-surface exploration programs. Paul also has extensive experience in chemical analytical data management and data reduction in support of RI/FS and RA projects.

- Shell Exploration and Production, 2006-2008 Beaufort Sea Shallow Hazards Survey, Seismic Data Acquisition; Beaufort Sea, Alaska
- Rayonier, Goose Lake RI, Site Investigation at Former Mill Facility; Shelton, Washington
- Quilcene Tribe, Surface Water Sampling and Field Training, Aberdeen, WA
- Olympic Pipe Line Company, Reroute Feasibility Study; Bellingham, Washington
- Jefferson County, Hoh River-Bank Restoration - Water Quality and Fish Survey, Jefferson County, WA
- Murphy Oil, Shallow Hazards Survey, Party Chief Seismic Data Acquisition; Lloyd's Ridge, Gulf of Mexico
- Douglas County PUD, Wells Hydroelectric Project, GIS Development Services; Wenatchee, Washington
- University of Washington Bothell/Cascadia Community College Co-located Campus; Bothell, Washington
- Confidential Client, Rockfall Hazards, GIS Rockfall Potential Evaluation; Honolulu, Hawaii
- City of Bellingham, Taylor Street Dock, Sediment Sampling; Bellingham, Washington

APPENDIX B
Site Specific Sampling Plan

Site Specific Sampling Plan

Avery Landing Site
Avery, Idaho

for
U.S. Environmental Protection Agency on Behalf of Potlatch Land and Lumber, LLC

May 13, 2013

GeoEngineers

Plaza 600 Building
600 Stewart Street, Suite 1700
Seattle, Washington 98101
206.728.2674

Site Specific Sampling Plan

Avery Landing Site
Avery, Idaho

File No. 2315-016-02

May 13, 2013

Approvals:

Signature: Date: May 13, 2013

John M. Herzog, PhD, Principal, GeoEngineers

Signature: Date: May 13, 2013

Robert S. Trahan, Environmental Geologist, GeoEngineers

Signature: Date: May 13, 2013

Mark J. Lybeer, Quality Assurance Leader, GeoEngineers

RST:JMH:csv

Disclaimer: Any electronic form, facsimile or hard copy of the original document (email, text, table, and/or figure), if provided, and any attachments are only a copy of the original document. The original document is stored by GeoEngineers, Inc. and will serve as the official document of record.

Copyright© 2013 by GeoEngineers, Inc. All rights reserved.

GeoEngineers

Table of Contents

1.0 INTRODUCTION B-1

2.0 PROJECT MANAGEMENT AND ORGANIZATION B-1

2.1. Personnel and Roles Involved in the Project B-1
2.2. Physical Description and Site Contact Information B-1
2.3. Schedule of Work B-2
2.4. Historical and Background Information B-2
2.5. Conceptual Site Model B-2
2.6. Decision Statement B-2
2.6.1. Soil Excavation B-2
2.6.2. Imported Fill Material B-3
2.6.3. Surface Water B-3
2.6.4. Water Treatment System B-3
2.6.5. Air B-3
2.6.6. Groundwater B-3
2.6.7. Temporary Facilities B-3
2.7. Action Levels B-4

3.0 DATA ACQUISITION AND MEASUREMENT OBJECTIVES B-4

3.1. Site Diagram and Sampling Area B-4
3.1.1. Soil Excavation B-4
3.1.2. Imported Fill Material B-5
3.1.3. Surface Water B-5
3.1.4. Water Treatment System B-5
3.1.5. Air B-6
3.1.6. Groundwater B-6
3.1.7. Temporary Facilities B-6
3.2. Decision Rules B-7
3.2.1. Soil Excavation B-7
3.2.2. Imported Fill Material B-8
3.2.3. Surface Water B-8
3.2.4. Water Treatment System B-8
3.2.5. Air B-8
3.2.6. Groundwater B-9
3.2.7. Temporary Facilities B-9
3.3. Information Needed for the Decision Rules B-9
3.3.1. Soil Excavation B-9
3.3.2. Imported Fill Material B-9
3.3.3. Surface Water B-10
3.3.4. Water Treatment System B-10
3.3.5. Air B-10
3.3.6. Groundwater B-10
3.3.7. Temporary facilities B-10
3.4. Sampling and Analysis B-10
3.4.1. Soil Excavation B-10

3.4.2. Imported Fill Material B-12
3.4.3. Surface water B-12
3.4.4. Air B-13
3.4.5. Excavation Water Treatment and Associated Product B-13
3.4.6. Groundwater B-13

4.0 APPLICABILITY OF THE DATA B-14

4.1.1. Definitive Data B-14
4.1.2. Screening Data with Definitive Confirmation B-15
4.1.3. Screening Data B-15
4.2. Special Sampling or Analysis Directions B-16
4.3. Method Requirements B-15
4.4. Sample Collection Information B-15

5.0 ASSESSMENT AND RESPONSE B-16

5.1. Project Discrepancies B-16

6.0 DATA VALIDATION AND USABILITY B-16

7.0 LIMITATIONS B-16

8.0 REFERENCES B-17

LIST OF TABLES

Table B-1. Sampling and Analysis Plan
Table B-2. Surface Water Quality Discharge Criteria
Table B-3. Import Fill Material Chemcial Analytical Criteria
Table B-4. Summary of Surface Soil Baseline Chemcial Analytical Data

LIST OF FIGURES

Figure B-1. Vicinity Map
Figure B-2. Removal Action Sampling Locations
Figure B-3. Water Treatment System, Start-up Sampling (PH. 1)
Figure B-4. Water Treatment System, General Operations (PH. 2)

1.0 INTRODUCTION

This document presents a Site Specific Sampling Plan (SSSP) for the environmental sampling activities to be completed as part of the Avery Landing Site (Site) removal action. The Site is located approximately one mile west of Avery, Idaho (Figure B-1). This SSSP is to be used in conjunction with the Site Quality Assurance Project Plan (QAPP) which is presented in Appendix C of the Avery Landing Removal Action Work Plan (Work Plan; GeoEngineers, 2013). The information contained in this SSSP is based on information available at the time of preparation. This SSSP may be updated as additional information becomes available.

The SSSP and associated QAPP were prepared in general accordance with the requirements of 40 CFR 300.415(b)(4)(ii), EPA's Requirements for Quality Assurance Project Plans (EPA, 2001) and EPA's Guidance for Quality Assurance Project Plans (EPA, 2002).

2.0 PROJECT MANAGEMENT AND ORGANIZATION

The project management and organization elements of the SSSP, as detailed below, address the basic area of project management including the project history, team objectives, roles and responsibilities of the participants. This element of the plan ensures that the project has a defined goal, and that all participants understand this goal and that the planning outputs have been documented.

2.1. Personnel and Roles Involved in the Project

Key individuals and positions providing quality assurance (QA) and quality control (QC), including a description of the responsibilities, lines of authority and communication for the key individuals and positions providing QA and QC, is presented in the QAPP (Appendix C of the Work Plan).

PHYSICAL DESCRIPTION AND SITE CONTACT INFORMATION

Site Name	Avery Landing Site
Site Location	The Site is located approximately one mile west of Avery, Idaho, on the north side of the St. Joe River. The Site is located in the NW quarter of Section 16, Township 45 North, Range 5 East, Willamette Meridian, and is located at latitude 47° 13' 57'' North and longitude is 115° 43' 40'' West.
Property Size	Approximately 6 acres
Site Regulatory Contact	Earl Liverman, EPA On-Scene Coordinator
Nearest Residents	The eastern portion of the Site includes the Bentcik property, a seasonally occupied residence.
Primary Land Uses Surrounding the Site	North: Highway 50 ("St. Joe River Road"), owned by the Federal Highway Administration (FWHA). South: St. Joe River (rural/recreational) East: Rural/recreational West: Rural/recreational

2.2. Schedule of Work

Removal action activities being performed by Potlatch Land and Lumber, LLC (Potlatch) will be completed summer/fall of 2013. Post-removal action groundwater monitoring will be completed following completion of the removal action as approved by EPA. A schedule for mobilization/demobilization, removal action activities, and reporting are presented in the Work Plan.

2.3. Historical and Background Information

Detailed information regarding Site and operational history, previous investigations and regulatory history and cleanup actions are presented in EPA's EE/CA (E&E, 2010) and/or Potlatch's Supplemental Investigation Report (GeoEngineers, 2011) and is summarized in the Work Plan.

2.4. Conceptual Site Model

Detailed information regarding the Conceptual Site Model is presented in EPA's EE/CA (E&E, 2010) and Potlatch's Supplemental Investigation Report (GeoEngineers, 2011). The nature and extent of contamination, sensitive species and environment, and cultural resources are summarized in the Work Plan.

2.5. Decision Statement

Decision Statements define the purpose and use of environmental data and serve as the basis for important decisions regarding key design features such as determining the end use of materials generated, response actions to be taken and/or the number and location of samples to be collected and the analyses to be performed.

2.5.1. Soil Excavation

2.5.1.1. OVERBURDEN SOIL

Decisions to be made during excavation of overburden soil are to:

- Confirm through field screening that overburden material meet the reuse criteria.
- Determine if the overburden soil used for backfill meets the compaction criteria following placement.

2.5.1.2. CONTAMINATED SOIL

Decisions to be made during excavation of contaminated soil are to:

- Determine if concentrations of contaminants in soil generated by the removal action meets landfill disposal criteria.

2.5.1.3. FINAL EXCAVATION LIMIT

Decisions to be made when the removal action is at the final excavation limit are to:

- Determine the vertical and lateral extent of petroleum contaminated soil within the removal action area.
- Determine the concentrations of petroleum hydrocarbons (TPH), VOCs, SVOCs, and PCBs in soil at the final excavation limit.

2.5.2. Imported Fill Material

Decisions to be made for imported fill material are to:

- Determine the concentrations of TPH, SVOCs, VOCs, and PCBs in imported fill.
- Determine the maximum dry density of imported fill material to confirm material is acceptable for placement.
- Determine if the imported fill material used for backfill meets the compaction criteria following placement.

2.5.3. Surface Water

- Determine surface water quality parameters to determine if the removal action is affecting surface water adjacent to the Site.

2.5.4. Water Treatment System

- Determine the effectiveness of the on-Site treatment system in meeting surface water discharge criteria prior to discharging any water. Only analytes previously detected in groundwater at concentrations exceeding surface water quality parameters will be evaluated (see Table 1 of the Work Plan).
- Determine if treated water generated during removal action meet the surface water discharge criteria.
- Determine if the primary granular activated carbon (GAC) vessel in the water treatment system is close to achieving breakthrough.
- Determine the chemical composition of product recovered by the water treatment system to determine the appropriate disposal facility.

2.5.5. Air

- Determine if dust/particulate generated by the removal action are being transported beyond the project boundary.

2.5.6. Groundwater

- Determine the concentrations of TPH, VOCs, SVOCs, and PCBs in groundwater following completion of the removal action and monitor natural attenuation of Site contaminants.

2.5.7. Temporary Facilities

Temporary facilities include the construction staging, water treatment, temporary haul road, temporary overburden soil stockpile and soil staging pad areas. Decisions to be made for these areas are to:

- Determine if the removal action has contributed additional contamination to areas utilized for establishment of temporary construction facilities.

2.6. Action Levels

Site action levels for the soil excavation, surface water monitoring, water treatment system monitoring, and air monitoring activities are presented in Table B-1. Water treatment system effluent discharge limits are presented in Table B-2. Import fill material criteria are presented in Table B-3.

3.0 DATA ACQUISITION AND MEASUREMENT OBJECTIVES

3.1. Site Diagram and Sampling Area

A Sampling Area is an area of the project in which a specific action will be performed to address the Decision Statements presented in Section 2.6. Figure B-1 shows the location of the Site and surrounding features. Figure B-2 shows the general Site layout, excavation areas and maximum expected limits of excavation based on the existing information, water treatment area and project boundary as well as upstream and downstream water quality sampling locations, and anticipated excavation limit sampling locations. Figure B-3 shown the general water treatment system layout and anticipated sampling locations during system startup. Figure B-4 shown the general water treatment system layout and anticipated sampling locations during normal system operation. The final excavation limits will be determined by EPA.

Sampling areas for the soil excavation and material generated by the soil excavation, imported fill material, water treatment system, and associated product, air, surface water, and post-removal action groundwater are summarized in the following sections.

3.1.1. Soil Excavation

3.1.1.1. OVERBURDEN SOIL

Overburden soil overlying petroleum contaminated soil is a sampling area. This sampling area will be field screened for the presence of free-phase petroleum hydrocarbons, oil-staining, sheen exceeding field screening criteria, and field measured organic vapor during excavation. Field screening methods are described in the QAPP. Action Levels based on field screening results are presented in Table B-1. The approximate extent of the expected excavation limits is shown on Figure B-2. Based on the results of previous environmental investigations and experience gained by EPA as part of the 2012 removal action, the overburden/contaminated soil contact at the Site maybe as shallow as 2 feet below ground surface (bgs).

3.1.1.2. CONTAMINATED SOIL

Excavation activities to remove the underlying contaminated soil is a sampling area and will extend laterally and vertically until field screening evidence of petroleum contamination is no longer observed. Contaminated soil generated by the removal action will be stockpiled on Site and allowed to dewater until soil from the stockpile passes a Paint Filter Liquids Test (PFLT; EPA Method 9095). If required by the receiving landfill, soil samples will be obtained from stockpiled contaminated soil at a frequency determined by the landfill and submitted for chemical analysis that may include SVOCs, VOCs, PCBs, TCLP and/or RCRA metals.

3.1.1.3. FINAL EXCAVATION LIMIT

Following confirmation of the final excavation limits passing sidewall and base field screening results, soil samples will be obtained from the sidewalls and base of the final excavation limit to determine final Site conditions and to determine baseline concentrations for natural attenuation monitoring. Potlatch will use discretion with respect to collection of sidewall samples will be collected from the transitions between the Potlatch property and FHWA properties, Potlatch and IDL properties, or Potlatch and Bentcik properties since the sidewall is comprised of clean backfill material placed by EPA. Sidewall samples will be collected from these transitions to confirm any areas suspected to have been re-contaminated as part of the transition area construction.

The approximate extent of the expected excavation limits are shown on Figure B-2. Based on the results of previous environmental investigations and experience gained by EPA as part of the 2012 removal action, petroleum hydrocarbon contaminated soil at the Site maybe as shallow as 2 feet bgs and could extend as deep as approximately 20 feet bgs.

3.1.2. Imported Fill Material

The source material for imported fill is a sampling area. Samples of the source material for imported fill soil will be collected and submitted to a chemical analytical laboratory to determine if the source material meets the chemical analytical criteria for use at the Site (Table B-3).

The imported fill material used for backfill is also a sampling area and will be tested to confirm adequate compaction following placement. Soil samples will be obtained from the source material and submitted for laboratory analysis to determine the materials maximum dry density.

3.1.3. Surface Water

Surface water upstream, mid-Site and downstream of the Site on the St. Joe River are sampling areas. Surface water monitoring will be conducted at locations upstream and downstream of the removal action area to determine if Site activities are adversely affecting surface water quality in the St. Joe River. A mid-Site location will be determined in the field based on the actual location of the water treatment system and discharge point and will be used to assess the potential impacts to surface water quality from the discharge of the treated water.

3.1.4. Water Treatment System

The influent and effluent water to the on-Site water treatment system are sampling locations. Influent and effluent water samples will be collected for chemical analysis during system startup and operation to evaluate the performance of the treatment system and ensure that contaminants of concern are not being discharged to the St. Joe River exceeding discharge limits (Table B-2).

In addition, water collected from between the primary and secondary GAC vessels in the water treatment system is a sampling location. Water samples will be collected between the primary and secondary GAC vessels during treatment system operation to evaluate potential contaminant breakthrough.

The temporary water treatment system has been designed to treat contaminants previously detected in groundwater at concentrations exceeding Idaho surface water quality criteria (Idaho Administrative Code [IAC] 58.01.02). Table 1 of the Work Plan presents a summary of analytes

detected in groundwater at the Site and corresponding maximum detected concentrations. Initial system startup testing and operational testing are described in Section 3.4.5. Influent, effluent and contaminant breakthrough sampling locations for setup testing and operational testing are shown on Figures B-3 and B-4, respectively.

3.1.5. Air

Air at the Site and in the nearby vicinity of the Site is a sampling area. Air monitoring for particulate matter will be conducted at locations upwind, mid-Site and downwind using field instruments to determine if Site activities are generating particulate concentrations that exceed action levels (Table B-1) at the project boundary.

3.1.6. Groundwater

Groundwater at the Site is a sampling area. New groundwater wells will be installed following removal action and groundwater samples will be obtained following completion of the removal action to monitor natural attenuation of Site contaminants. A Natural Attenuation Performance Groundwater Monitoring Plan identifying analytes, sampling locations, frequency, and duration will be prepared following completion of the removal action and will be submitted to EPA for review and approval.

3.1.7. Temporary Facilities

Temporary facilities, including the construction staging area, water treatment area, temporary haul roads, temporary overburden soil stockpile, and soil staging pads are sampling areas. During the 2012 EPA removal action, composite and discrete soil samples were obtained within portions of Potlatch's property to document pre-use conditions. These sampling areas/locations are shown on Figure B-2. Chemical analytical results from EPA's baseline sampling activities are summarized in Table B-4.

Prior to the start of the Potlatch removal action, baseline samples will be obtained from composite sampling areas BL04 and BL05 and discrete sampling locations BL04V and BL05V to represent pre-use soil conditions in the portion of the property that may be utilized for construction staging overburden soil stockpiles, water treatment, and/or temporary roads. Baseline samples will not be obtained in the portions of the property occupied by the soil staging pads since the ground surface beneath these pads is inaccessible. Additionally, baseline samples will not be obtained from areas of the property that will be excavated as part of the Potlatch removal action. Following completion of the removal action, composite sampling areas BL01 through BL05 and discrete sampling locations BL01V through BL05V will be re-sampled to evaluated post-use conditions.

Post-use sample results will be compared to pre-use sample results to determine if Site activities have contributed additional contamination at these locations. The approximate locations of the soil staging pads, temporary haul roads, construction staging and water treatment areas as well as the approximate composite sampling areas, and discrete sampling locations for EPA's 2012 removal action are shown on Figure B-2.

3.2. Decision Rules

Decision Rules are statements that describe how the decisions will be made and how to address results exceeding action levels established for the project. Decision rules for the removal action are summarized in the following sections.

3.2.1. Soil Excavation

3.2.1.1. OVERBURDEN SOIL

If soil indicates the presence of free-phase petroleum hydrocarbons, oil-staining, sheen exceeding the field screening criteria, or elevated field measured organic vapor during excavation activities, then the soil will be segregated, stockpiled and treated as contaminated (see Section 3.2.1.2). If soil generated during excavation activities to remove overburden material does not yield field screening evidence of petroleum contamination, then the material will be stockpiled on Site pending reuse as excavation backfill.

Overburden material used for backfill will be placed in the excavations using 24-inch lifts or less and will be compacted with equipment suitable for the soil type. If field density tests of the compacted overburden material used is below the minimum compaction requirements, additional compaction will occur until the density meets the minimum compaction criteria (Table B-1).

3.2.1.2. CONTAMINATED SOIL

If field screening results indicate the presence of petroleum contamination, then material represented by these field screening results will be transferred from the Site to a permitted landfill. Contaminated soil generated within the saturated zone will be stockpiled on-Site and allowed to dewater until stockpile samples pass the PFLT. If samples of the stockpiled contaminated soil fail the PFLT, then the stockpile will be allowed to dewater further until stockpile samples pass the PFLT.

If requested by the receiving landfill, samples will be obtained for chemical analysis for soil disposal profiling. Sample results will be submitted to the landfill prior to transport to ensure that the material is acceptable for disposal.

If batteries, leaky underground storage tanks (LUSTs), drums, etc. are encountered during excavation, soil removed from these areas will be segregated and tested for TCLP, PCBs or other required analysis to characterize the material for disposal. If asbestos containing material is encountered (i.e., asbestos cement pipes), this material will be abated following federal guidelines and transferred to a landfill permitted to receive such material.

3.2.1.3. FINAL EXCAVATON LIMIT

EPA will determine the final excavation limit. If soil at the estimated excavation limit indicates field screening evidence of petroleum contamination, then excavation activities will continue laterally until field screening evidence of contamination is no longer observed; and vertically until field screening evidence of petroleum contamination is no longer observed or to a maximum depth of approximately two feet below the seasonal low groundwater level of 17 feet bgs.

3.2.2. Imported Fill Material

If soil samples of the import fill material source exceed the chemical analytical criteria presented in Table B-3, then the import fill material source will not be used and additional sources of import fill material evaluated.

Import fill material used for backfill will be placed in the excavations using 24-inch lifts or less and will be compacted with equipment suitable for the soil type. If field density tests of the compacted fill material used is below the minimum compaction requirements, additional compaction will occur until the density meets the minimum compaction criteria (Table B-1).

3.2.3. Surface Water

If downstream surface water quality parameters exceed the action levels presented in Table B-1, additional Best Management Practices (BMPs) will be implanted to correct the action level exceedance or until no additional project activity modification is possible.

3.2.4. Water Treatment System

If effluent water sample results during system startup (before any water is discharged) exceed the surface water discharge criteria presented in Table B-2, then the water represented by this sample will be rerouted through the treatment system and/or the treatment system will be modified to improve efficiency until acceptable water sample results are achieved. If sample results during system startup (before any water is discharged) are below the limits presented in Table B-2, then the treatment system will be considered operational and the treated water will be discharged to the St. Joe River and/or will be reused on-Site.

If effluent water sample results from the water treatment system during the removal action exceed the surface water discharge criteria presented in Table B-2, then the discharge of treated water to the St. Joe River will be suspended and batched treated water rerouted through the treatment system until acceptable water sample results are achieved. If sample results from the water treatment system during the removal action are below the limits presented in Table B-2, then the water will be discharged to the St. Joe River and/or will be reused on-Site.

If water samples from the water treatment system obtained from between the primary and secondary GAC vessels have detections of SVOCs or petroleum hydrocarbons that exceed the surface water discharge criteria presented in Table B-2, the primary GAC vessel will be replaced or GAC will be replaced with new material.

If product is obtained from the water treatment system, the product will be skimmed off, stored on Site in 55-gallon drums, laboratory analysis conducted as required by an appropriate disposal facility and disposed of separately from the treated water.

3.2.5. Air

If the air particulate concentration at the project boundary exceed the action levels presented in Table B-1, additional BMPs will be implanted to control dust (i.e., suspending excavation activities, soil wetting, etc.) until the air monitoring results are below the action levels.

3.2.6. Groundwater

Existing Site groundwater monitoring wells and groundwater monitoring wells installed following completion of the removal action (see Section 3.4.6) will be sampled to monitor post-removal action groundwater conditions and natural attenuation of Site contaminants. Sampling locations, frequency and duration will be determined following completion of the removal action and will be submitted to EPA for review and approval.

3.2.7. Temporary Facilities

If samples representing post-use conditions indicate that the Site activities have not contributed to additional contamination at these locations, then no additional action will be taken. If post-use samples indicated that the Site activities have contributed to additional contamination at these locations, then soil represented by these samples will be removed from the property and the newly exposed surface re-sampled to confirm removal of the impacted material.

3.3. Information Needed for the Decision Rules

Parameters/analytes for the surface water monitoring, water treatment system monitoring, and air monitoring activities are presented in Table B-1. Water treatment system effluent discharge parameters and limits are presented in Table B-2. Import fill material analytical criteria are presented in Table B-3. The information needed to apply the decision rules are described in the following sections.

3.3.1. Soil Excavation

3.3.1.1. OVERBURDEN SOIL

- Field screening results for the presence of free-phase petroleum hydrocarbons, oil staining, sheen exceeding field screening criteria, or elevated field measured organic vapor.
- Soil compaction results for backfilled overburden material.

3.3.1.2. CONTAMINATED SOIL

- Results of soil samples of stockpiled contaminated soil analyzed for PFLT.
- If required by the receiving landfill, stockpiled contaminated soil will be sampled for chemical analysis.

3.3.1.3. FINAL EXCAVATION LIMIT

- Field screening results for the presence of free-phase petroleum hydrocarbons, oil staining, sheen exceeding field screening criteria, or elevated field measured organic vapor.
- Soil samples results taken from the final excavation limits submitted for laboratory analysis of TPH, VOCs, SVOCs, and PCBs.

3.3.2. Imported Fill Material

- Soil samples of import fill material for chemical analysis.
- Results of maximum dry density testing for soil samples of imported fill material.
- Soil compaction results for backfilled imported fill material.

3.3.3. Surface Water

- Surface water quality parameters at upstream, mid-Site and downstream locations.

3.3.4. Water Treatment System

- Water treatment system influent and effluent sample results for chemical analysis during system startup.
- Water treatment system influent and effluent sample results for chemical analysis during removal action.
- Water treatment system sample results between the primary and secondary GAC vessels for chemical analysis during removal action.
- If required by the receiving facility, product samples will be sampled for chemical analysis.

3.3.5. Air

- Air particulate concentrations at the upwind, mid-Site and downwind project boundary locations.

3.3.6. Groundwater

- Water samples to monitor groundwater conditions and natural attenuation of Site contaminants.

3.3.7. Temporary facilities

- Field screening results for the presence of free-phase petroleum hydrocarbons, oil staining, sheen exceeding field screening criteria, or elevated field measured organic vapor.
- Composite soil samples results taken from areas of the property utilized for temporary roads, construction staging, soil staging, and water treatment submitted for laboratory analysis of TPH, SVOCs, and PCBs.
- Discrete soil samples results taken from areas of the property utilized for temporary roads, construction staging, soil staging, and water treatment submitted for laboratory analysis of VOCs.

3.4. Sampling and Analysis

Sampling and analysis protocols are described in greater detail in the QAPP. Field procedures including field screening, soil sample collection and field documentation as well as data quality objectives for chemical analysis are presented in the QAPP.

3.4.1. Soil Excavation

3.4.1.1. OVERBURDEN SOIL

Field observations, including water sheen testing, the presence of free-phase petroleum hydrocarbons, oil-staining or elevated field measured organic vapor will be used for determining petroleum contaminated soil. The procedure for water sheen testing will consist of collecting approximately 50 grams of soil at the selected locations within a sheen pan containing water. Samples that exhibits rainbow sheen (definite oil sheen, film or product that displays rainbow) will

be considered contaminated. A passing test will be defined as soil that does not exhibit rainbow sheen. If rainbow sheen is observed in a sample, or if free-phase petroleum hydrocarbons, oil-staining or elevated field measured organic vapor using a photoionization detector (PID) is noted, then soil represented by this sample will be segregated and stockpiled on Site pending transport to a permitted landfill.

Overburden soil in which the presence of free-phase petroleum hydrocarbons, oil-staining, sheen exceeding field screening criteria, or elevated field measured organic vapor is not observed will be stockpiled on Site for reuse as backfill material.

Overburden soil material will be placed in the excavation using 24-inch lifts or less and will be compacted with equipment suitable for the soil type with the goal of reaching 90 percent of the maximum dry density. Stones will not be allowed to form clusters with voids. When backfill material is too dry for adequate compaction, water shall be added to the extent necessary to achieve compaction.

3.4.1.2. CONTAMINATED SOIL

Soil in which exhibits the presence of free-phase petroleum hydrocarbons, oil-staining, sheen exceeding field screening criteria, or elevated field measured organic vapor will be considered contaminated and will be transferred to a permitted landfill for disposal. Petroleum contaminated soil generated from the saturated zone will be allowed to drain until samples from the pile pass the PFLT.

If requested by the receiving landfill, soil samples will be obtained at the frequency determined by the receiving landfill, and submitted to a contracted off-Site laboratory with a quick turnaround time for one or more of the following chemical analyses:

- VOCs by EPA Method 8260;
- SVOCs by EPA Method 8270/SIM;
- PCBs by EPA Method 8082;
- RCRA metals including arsenic, barium, cadmium, chromium, lead, mercury, selenium and silver by EPA Method 6000/7000 series; and/or
- TCLP by EPA Method 1311.

3.4.1.3. FINAL EXCAVATION LIMIT

Soil samples will be obtained from the base of the final excavation limit on a grid pattern with grid cells measuring approximately 150 feet (along the plume length) by approximately 100 feet (along the plume width). For the excavation sidewalls, one soil sample will be collected approximately every 300 horizontal feet of sidewall at a depth either similar to the documented presence of Site contaminants or at the approximate midpoint between the base of the excavation and the ground surface. The anticipated locations for base and sidewall samples based on the maximum expected limits of excavation are shown on Figure B-2.

Samples will be direct grab samples, or, depending on stability of the excavation and access to the selected sample location, may be collected from the bucket of the backhoe performing the

excavation. Samples will be collected at a depth of approximately 2 to 6 inches into the exposed surface and containerized as specified by the laboratory with the sample location, date, time and depth documented. Soil samples will be placed in placed on ice for transport to the analytical laboratory. Soil samples will be submitted to a contracted off-Site laboratory for the following chemical analyses:

- Diesel- and heavy oil-range petroleum hydrocarbons by Ecology Method NWTPH-Dx;
- VOCs by EPA Method 8260;
- SVOCs by EPA Method 8270/SIM; and
- PCBs by EPA Method 8082.

3.4.2. Imported Fill Material

One composite soil samples will be obtained from each source that will be used for importing fill material. For example, if material is received from the County or USFS, each discrete source area where material may be taken from will be sampled. A composite soil sample of the source material will be obtained to determine the maximum dry density using a modified proctor test by ASTM method D1557. In addition, a composite soil sample will also be submitted to a contracted off-Site laboratory with a quick turnaround time for the following chemical analyses:

- Diesel- and heavy oil-range petroleum hydrocarbons by Ecology Method NWTPH-Dx;
- VOCs by EPA Method 8260;
- SVOCs by EPA Method 8270/SIM; and
- PCBs by EPA Method 8082.

Fill material will be placed in the excavation using 24-inch lifts or less and will be compacted with equipment suitable for the soil type. At least one field density test for approximately every three lifts will be taken using ASTM Method D6938 (nuclear density gauge). Stones will not be allowed to form clusters with voids. When backfill material is too dry for adequate compaction, water shall be added to the extent necessary to achieve 90 percent compaction relative to the maximum density.

3.4.3. Surface Water

Field measurements of pH, electric conductivity, turbidity, dissolved oxygen and temperature will be obtained on a daily basis during excavation, active waste water discharge, and during shoreline excavation activities. Field parameters will be measured from grab samples collected from the anticipated upstream and downstream sampling locations shown on Figure B-2. A mid-Site sampling location will be determined in the field based on the actual location of the water treatment system. A Hanna Instruments multi-parameter meter or similar will be used for documenting pH, electric conductivity, dissolved oxygen and temperature. A Lamotte turbidimeter or similar will be used to document turbidity.

Procedures for measuring field parameters will be in general accordance with the manufacturer's instructions.

3.4.4. Air

Daily air monitoring samples will be collected at the project boundary during excavation activities using an AeroTrak Handheld Particle Counter or similar. Prior to the start of Site work, an upwind (or background) reading will be measured. During Site work, periodic readings will be collected throughout the day (saving data to a data logger or documented in daily field records) mid-Site and downwind of the work area. If wind direction or intensity changes throughout the day, the location of the upwind and downwind monitoring locations will be updated and additional upwind measurements may be obtained to confirm background levels.

Procedures for measuring field parameters will be in general accordance with the manufacturer's instructions.

3.4.5. Excavation Water Treatment and Associated Product

3.4.5.1. STARTUP TESTING

Influent and effluent water samples will be obtained from water treatment system during system startup at locations shown on Figure B-3. Grab samples will be obtained from water entering the treatment system (pre-treatment/influent sample) and from water exiting the treatment system (post-treatment/effluent sample) through inline sampling ports in approximately 10,000 gallons batches until a total of 50,000 gallons of water has been processed. Influent and effluent samples will be submitted to a contracted off-Site laboratory with a quick turnaround for the following:

- SVOCs including benzo[a]anthracene, benzo[a]pyrene, benzo[b]fluoranthene, benzo[k]fluoranthene, bis[2-ethylhexyl]phthalate, chrysene, and n-nitrosodiphenylamine by EPA Method 8270/SIM;
- PCBs by EPA Method 8082; and
- Metals including arsenic, cadmium, copper, lead, mercury, thallium, and zinc by EPA Method 200.7/200.8/7470A/7471B.

3.4.5.2. OPERATIONAL TESTING

Influent and effluent samples will be obtained at locations shown on Figure B-4 on a weekly basis during operation to monitor the discharge concentrations. Grab samples will be collected and submitted to a contracted off-Site laboratory with a quick turnaround for the following:

- SVOCs including benzo[a]anthracene, benzo[a]pyrene, benzo[b]fluoranthene, benzo[k]fluoranthene, bis[2-ethylhexyl]phthalate, chrysene, and n-nitrosodiphenylamine by EPA Method 8270/SIM;
- PCBs by EPA Method 8082; and
- Metals including arsenic, cadmium, copper, lead, mercury, thallium, and zinc by EPA Method 200.7/200.8/7470A/7471B.

A water sample will also be obtained on a weekly basis between the primary and secondary GAC vessels (see Figure B-4) during operation to monitor contaminant breakthrough. Grab samples will

be collected and submitted to a contracted off-Site laboratory with a quick turnaround for the following:

- SVOCs including benzo[a]anthracene, benzo[a]pyrene, benzo[b]fluoranthene, benzo[k]fluoranthene, bis[2-ethylhexyl]phthalate, chrysene, and n-nitrosodiphenylamine by EPA Method 8270/SIM.

The samples collected between the GAC vessels will only be analyzed for SVOCs because it is expected that SVOCs will be the first contaminants to achieve breakthrough.

3.4.5.3. PRODUCT SAMPLES

Grab sample(s) will be collected from the treated water system recovered product and analyzed for the parameters required by the disposal facility at a chemical analytical laboratory. The actual quantity of samples will be determined based on the volume of product collected and the requirements of the disposal facility.

3.4.6. Groundwater

Following completion of the removal action, an estimated 4 to 5 monitoring wells will be installed in and around the excavation area to evaluate groundwater conditions at the Site. Grab samples will be collected from these wells and one or more exiting monitoring wells following completion of the removal action. A Natural Attenuation Performance Groundwater Monitoring Plan identifying analytes, sampling locations, frequency, and duration will be prepared following completion of the removal action and will be submitted to EPA for review and approval. Collected grab samples will be submitted to a contracted off-Site laboratory with a standard turnaround for the following:

- Diesel- and heavy oil-range petroleum hydrocarbons by Ecology Method NWTPH-Dx;
- VOCs by EPA Method 8260;
- SVOCs by EPA Method 8270/SIM; and
- PCBs by EPA Method 8082.

3.4.7. Temporary Felicities

Soil samples will be obtained from the areas of the property that are utilized for temporary roads, construction staging, soil staging, and water treatment. Prior to the start of construction, soil samples will be from the approximate areas utilized by EPA during their 2012 removal action for stockpiling of overburden soil, construction staging and temporary roads (i.e., Composite Sampling Areas BL04 and BL05, and Discrete Sampling Locations BL04V and BL05V) for TPH, SVOC, PCB, and VOC analysis to represent pre-use conditions for the Potlatch removal action. At the completion of the removal action, soil samples will be obtained from Composite Sampling Areas BL01 through BL05, and Discrete Sampling Locations BL01V through BL05V to represent post-use conditions.

Composite samples will be submitted to a contracted off-Site laboratory with a standard turnaround for the following:

- Diesel- and heavy oil-range petroleum hydrocarbons by Ecology Method NWTPH-Dx;

- SVOCs by EPA Method 8270/SIM; and
- PCBs by EPA Method 8082.

Discrete samples will be submitted to a chemical analytical laboratory with a standard turnaround for the following:

- VOCs by EPA Method 8260.

4.0 APPLICABILITY OF THE DATA

4.1. Definitive Data

Definitive data is analytical data of sufficient quality for final decision-making. The objectives, procedures, organization, and specific quality assurance (QA) and quality control (QC) activities designed to achieve definitive data for the project is presented in the QAPP.

All chemical analytical data provided by fixed laboratories will be considered definitive data for the following:

- Final excavation limit soil samples;
- Stockpile soil samples;
- Imported fill material soil samples;
- Water treatment system influent and effluent water samples;
- Water treatment system water samples between the primary and secondary GAC vessels;
- Post-removal action groundwater samples; and
- Pre- and post-use soil characterization samples.

4.1.1. Screening Data with Definitive Confirmation

Screening data with definitive confirmation is analytical data that may be used to support preliminary or intermediate decision-making until confirmed by definitive data. Screening data with definitive confirmation will not be collected for the removal action.

4.1.2. Screening Data

Screening data is analytical data which has not been confirmed by definitive data. This data can be used for making decisions: 1) in emergencies, 2) for health and safety screening, 3) to supplement other analytical data, 4) to determine where to collect samples, 5) for waste profiling, and 6) for preliminary identification of pollutants. However, this data is not of sufficient quality for final decision making.

All data obtained from field instruments and/or visual observations will be considered screening data. Field instrument will be used for measuring surface water quality parameters, air particulate matter and soil density. Field screening methods, including water sheen screening, visual observations and headspace vapor measurements using a PID will be used to evaluate the

presence of petroleum contamination (i.e., free-phase petroleum hydrocarbons, oil-staining, sheen, or field measured organic vapor).

4.2. Special Sampling or Analysis Directions

Special sampling and analysis methods are described in the QAPP.

4.3. Method Requirements

The goal of the analytical methods is to achieve practical quantitation limits (PQLs) lower than the Site screening levels. However, commercially available laboratory analyses may not be able to achieve PQLs for all chemicals that are lower than screening levels. If commercially available laboratory analyses are not be able to achieve a PQL lower than the screening level for a specific chemical, then the PQL will become the screening level.

4.4. Sample Collection Information

Sample collection procedures to be utilized as part of this investigation including field documentation, sample labeling, packaging and shipment, and sampling equipment maintenance, calibration and decontamination are presented in the QAPP.

Standard operating procedures (SOPs) for sampling and analytical protocols will be followed general accordance "Environmental Response Team Standard Operating Procedures," OSWER Directive Numbers 9360.4-02 through 9360.4-08 (ERT, 1991). Applicable SOPs or methods for the Avery Landing removal action include:

- SOP No. 2001 – General Field Sampling Guidelines
- SOP No. 2002 – Sample Documentation
- SOP No. 2003 – Sample Storage, Preservation and Handling
- SOP No. 2004 – Sample Packaging and Shipping
- SOP No. 2005 – Quality Assurance/Quality Control Samples
- SOP No. 2006 – Sample Equipment Decontamination
- SOP No. 2007 – Groundwater Well Sampling
- SOP No. 2008 – Air Sampling
- SOP No. 2012 – Soil Sampling
- SOP No. 2013 – Surface Water Sampling
- SOP No. 2043 – Manual Water Level Measurement
- SOP No. 2044 – Monitoring Well Development
- SOP No. 2048 – Monitoring Well Installation

Quick Start Guides and/or Manufactures Instructions will serve as SOPs for field instruments (e.g., air monitoring equipment, PID, and/or surface water monitoring equipment).

5.0 ASSESSMENT AND RESPONSE

5.1. Project Discrepancies

Project discrepancies will be noted in field notes. The final report that is prepared will contain the reason for any discrepancies, and an assessment of the extent to which the discrepancies affect the usability of the data. The QAPP contains additional detail regarding documentation of project discrepancies.

6.0 DATA VALIDATION AND USABILITY

Data generated by laboratory analysis will be provided in an electronic data deliverable (EDD) as well as hard copy. The EDD will be used for data tabulation and presentation as well as data review and validation that will be presented in the investigation report. Data validation will be performed as detailed in the QAPP.

7.0 LIMITATIONS

We have prepared this Site Specific Sampling Plan for use by the Potlatch Land and Lumber, LLC during the removal action at the Avery Landing Site. Within the limitations of scope, schedule and budget, our services have been executed in accordance with generally accepted environmental science practices in this area at the time this report was prepared. No warranty or other conditions, express or implied, should be understood.

Any electronic form, facsimile or hard copy of the original document (email, text, table, and/or figure), if provided, and any attachments are only a copy of the original document. The original document is stored by GeoEngineers, Inc. and will serve as the official document of record.

8.0 REFERENCES

E & E (Ecology and Environment, Inc.), "Draft Final Engineering Evaluation /Cost Analysis, Avery Landing Site, Avery, Idaho," prepared for the United States Environmental Protection Agency, Region 10, dated December 2010.

GeoEngineers, Inc., "Final Removal Action Work Plan, Avery Landing Site, Avery, Idaho." GEI File No. 2315-016-02, Prepared for United States Environmental Protection Agency on Behalf of the Potlatch Land and Lumber, dated May 10, 2013.

GeoEngineers, Inc., "Supplemental Site Investigation, Avery Landing Site, Avery, Idaho." GEI File No. 2315-016-01, prepared for Potlatch Forest Holdings, Inc., dated November 9, 2011.

Golder Associates, Inc., (Golder), "Final Engineering Evaluation /Cost Analysis Work Plan for the Avery Landing Site, Avery, Idaho," Prepared for the Potlatch Forest Products Corporation, dated January 23, 2009.

United States Environmental Protection Agency (EPA), "Guidance for Quality Assurance Project Plans, EPA QA/G-5" publication EPA/240/R-02/009, dated December 2002.

United States Environmental Protection Agency (EPA), "Requirements for Quality Assurance Project Plans, EPA QA/R-5" publication EPA/240/B-01/003, dated March 2001.

United States Environmental Protection Agency (EPA), Hazardous Waste Test Methods: Method 9095 Paint Filter Test, 2012. http://www.epa.gov/osw/hazard/testmethods/sw846/online/9_series.htm.

United States Environmental Protection Agency (EPA), Compendiums of the Environmental Response Team's (ERT) standard operating procedures (SOPs) for sampling and analytical protocols," Environmental Response Team, Emergency Response Division, Office of Emergency and Remedial Response, OSWER Directive Nos. 9360.4-02 to 9360.4-08, dated 1991.

Environmental Response Team Standard Operating Procedures. http://www.epaosc.org/site/site_profile.aspx?site_id=2107.

Table B-1

Sampling and Analysis Plan

Avery Landing Site
Avery, Idaho

Data Quality	Sampling Area	Matrix	Sample Pattern	Sample Type	Data Applicability	Analyte/ Parameter	Method	Action Level	Method Quantitation Limit
Field Analysis	Soil Excavation (Overburden)	Soil	Targeted	Grab	Screening	• Water Sheen Test • Visual Observation • Headspace Vapor (PID)	N/A	• Rainbow Sheen • Visual Petroleum Staining • >5 ppm above background	• N/A • N/A • 1 ppm
Field Analysis	Excavated Soil (Contaminated)	Soil	Targeted	Grab	Screening	• Water Sheen Test • Visual Observation • Headspace Vapor (PID)	N/A	• Rainbow Sheen • Visual Petroleum Staining • >5 ppm above background	• N/A • N/A • 1 ppm
Field Analysis	Excavated Soil (Contaminated)	Soil	Targeted	Grab	Screening	Paint Filter Test	EPA 9095	Presence of free liquid	N/A
Lab Analysis	Excavated Soil (Contaminated)	Soil	Targeted	Grab	Definitive	• SVOCs • VOCs • PCBs • Metals • TCLP	• EPA 8270/SIM • EPA 8260 • EPA 8082 • EPA 6000/7000 series • EPA 1311	• N/A • N/A • TSCA[1] • 20 Times Rule[2] • Dangerous Waste[3]	See QAPP
Field Analysis	Import Fill Material	Soil	Targeted	Grab	Screening	• Water Sheen Test • Visual Observation • Headspace Vapor (PID)	N/A	• Rainbow Sheen • Visual Petroleum Staining • >5 ppm above background	• N/A • N/A • 1 ppm
Lab Analysis	Import Fill Material	Soil	Targeted	Grab	Definitive	• Diesel and Heavy Oil • SVOCs • VOCs • PCBs	• NWTPH-Dx • EPA 8270/SIM • EPA 8260 • EPA 8082	See Table B-3	See QAPP
Lab Analysis	Import Fill Material	Soil	Targeted	Grab	Screening	Modified Proctor Test	ASTM D1557	N/A	N/A
Field Analysis	Import Fill Material	Soil	Targeted	Grab	Screening	Soil Density Test	ASTM D6938	<90% Maximum Relative Dry Density	1%
Field Analysis	St. Joe River	Water	Targeted	Grab	Screening	• pH • Electric Conductivity • Turbidity • Dissolved Oxygen • Temperature	N/A	±10% of Upstream Measurement	• 0.1 • 0.1 S/m • 1 NTU • 0.1 ppm • 0.1 °C
Field Analysis	Site Perimeter	Air	Targeted	Grab	Screening	Particulate Matter	N/A	>2x Upwind Measurement	0.01 mg/m^3
Lab Analysis	Treated Water	Water	Targeted	Grab	Definitive	• SVOCs • PCBs • Metals	• EPA 8270/SIM • EPA 8082 • EPA 200.7/200.8/ 7470A/7471B	See Table B-2	See QAPP
Lab Analysis	Recovered Product	Product	Targeted	Grab	Definitive	To Be Determined by the Disposal Facility	To Be Determined	To Be Determined	To Be Determined
Lab Analysis	Final Excavation Limit	Soil	Targeted	Grab	Definitive	• Diesel and Heavy Oil • SVOCs • VOCs • PCBs	• NWTPH-Dx • EPA 8270/SIM • EPA 8260 • EPA 8082	N/A	See QAPP

Data Quality	Sampling Area	Matrix	Sample Pattern	Sample Type	Data Applicability	Analyte/ Parameter	Method	Action Level	Method Quantitation Limit
Lab Analysis	Groundwater	Water	Targeted	Grab	Definitive	● Diesel and Heavy Oil ● SVOCs ● VOCs ● PCBs	● NWTPH-Dx ● EPA 8270/SIM ● EPA 8260 ● EPA 8082	N/A	See QAPP
Lab Analysis	Pre-Use Soil Condition	Soil	Composite	Grab	Definitive	● Diesel and Heavy Oil ● SVOCs ● PCBs	● NWTPH-Dx ● EPA 8270/SIM ● EPA 8082	N/A	See QAPP
Lab Analysis	Pre-Use Soil Condition	Soil	Targeted	Grab	Definitive	● VOCs	● EPA 8260	N/A	See QAPP
Lab Analysis	Post-Use Soil Condition	Soil	Composite	Grab	Definitive	● Diesel and Heavy Oil ● SVOCs ● PCBs	● NWTPH-Dx ● EPA 8270/SIM ● EPA 8082	N/A	See QAPP
Lab Analysis	Post-Use Soil Condition	Soil	Targeted	Grab	Definitive	● VOCs	● EPA 8260	N/A	See QAPP

Notes:

[1] Soil in which PCBs are detected at a concentration of 50 mg/kg or greater will be managed and handled as a TSCA waste.

[2] Soil samples will be analyzed using TCLP for metals if the detected concentration exceed the 20 times trigger value (i.e. 100 mg/kg for arsenic, 2,000 mg/kg for barium, 20 mg/kg for cadmium, 100 mg/kg for chromium, 4 mg/kg for mercury, 20 mg/kg for selenium, and 100 mg/kg for silver).

[3] Soil in which TCLP arsenic, barium, cadmium, chromium, lead, mercury, selenium and silver are detected at a concentration of 5 mg/L, 100 mg/L, 1 mg/L, 5 mg/L, 5.0 mg/L, 0.2 mg/L, 1 mg/L and 5 mg/L, respectively, will be managed and handled as a federal dangerous waste.

PID = Photoionization Detector
ppm = parrts per million
ASTM = American Society for Testing and Materials
EPA = Environmental Protection Agency
SVOCs = Semivolatile Organic Compounds
VOCs = Volatile Organic Compounds
PCBs = Polychlorinated Biphenyls
TCLP = Toxicity Characteristic Leaching Procedure
TSCA = Toxic Substances Control Act
QAPP = Quality Assurance Project Plan
RCRA = Resource Conservation and Recovery Act

Table B-2

Water Treatment System Effluent Discharge Limits

Avery Landing Site

Avery, Idaho

Analyte	CAS No.	Analytical Method	Discharge Limit[1] (µg/L)	Limit Type	Sample Type
Metals					
Arsenic	7440-38-2	EPA 200.7/200.8	10	Daily Maximum	Grab
Cadmium	7440-43-9	EPA 200.7/200.8	0.6	Daily Maximum	Grab
Copper	7440-50-8	EPA 200.7/200.8	11	Daily Maximum	Grab
Lead	7439-92-1	EPA 200.7/200.8	2.5	Daily Maximum	Grab
Mercury	7439-97-6	EPA 7470A/7471B	0.012	Daily Maximum	Grab
Thallium	7440-28-0	EPA 200.7/200.8	0.24	Daily Maximum	Grab
Zinc	7440-66-6	EPA 200.7/200.8	120	Daily Maximum	Grab
Semivolatile Organic Compounds (SVOCs)					
bis(2-Ethylhexyl)phthalate	117-81-7	EPA 8270	1.2	Daily Maximum	Grab
n-Nitrosodiphenylamine	86-30-6	EPA 8270	3.3	Daily Maximum	Grab
Carcinogenic Polycyclic Aromatic Hydrocarbons (cPAHs)					
Benzo[a]anthracene	56-55-3	EPA 8270 SIM	0.0038	Daily Maximum	Grab
Benzo[a]pyrene	50-32-8	EPA 8270 SIM	0.0038	Daily Maximum	Grab
Benzo[b]fluoranthene	205-99-2	EPA 8270 SIM	0.0038	Daily Maximum	Grab
Benzo[k]fluoranthene	207-08-9	EPA 8270 SIM	0.0038	Daily Maximum	Grab
Chrysene	218-01-9	EPA 8270 SIM	0.0038	Daily Maximum	Grab
Polychlorinated Biphenyls (PCBs)					
Total PCBs (sum of Aroclors)	1336-36-3	EPA 8082	0.000064	Daily Maximum	Grab

Notes:

[1]Or lowest obtainable analytical detection level. Discharge criterial referenced from Idaho Administrative Code 58.01.02.

EPA = Environmental Protection Agency

µg/L = micrograms per liter

Table B-3

Import Fill Material Chemical Criteria

Avery Landing Site
Avery, Idaho

Analyte	CAS No.	Analytical Method	Screening Level[1] (mg/kg)
Petroleum Hydrocarbons (TPH)			
Diesel-range	68334-30-5	NWTPH-DX	NE
Heavy oil-range	30109	NWTPH-DX	NE
Volatile Organic Compounds (VOCs)			
1,2,4-Trimethylbenzene	95-63-6	EPA 8260	0.19
1,2-Dichlorobenzene	95-50-1	EPA 8260	5.3
1,3,5-Trimethylbenzene	108-67-8	EPA 8260	0.15
1,4-Dichlorobenzene	106-46-7	EPA 8260	0.076
4-Isopropyltoluene	99-87-6	EPA 8260	NE
Benzene	9072-35-9	EPA 8260	0.018
cis-1,2-Dichloroethene	156-59-2	EPA 8260	0.19
Ethylbenzene	100-41-4	EPA 8260	10
Isopropylbenzene	98-82-8	EPA 8260	3.5
Methylene Chloride	75-09-2	EPA 8260	0.017
m-Xylene & p-Xylene	108-38-3 & 106-42-3	EPA 8260	1.7[2]
n-Butylbenzene	104-51-8	EPA 8260	1.2
N-Propylbenzene	103-65-1	EPA 8260	NE
o-Xylene	95-47-6	EPA 8260	1.7[2]
sec-Butylbenzene	135-98-8	EPA 8260	1.2
tert-Butylbenzene	98-06-6	EPA 8260	0.85
Toluene	108-88-3	EPA 8260	4.9
Trichloroethene	79-01-6	EPA 8260	0.0029
2-Butanone	78-93-3	EPA 8260	12
2-Hexanone	193818-72-3	EPA 8260	NE
Acetone	67-64-1	EPA 8260	17
Carbon disulfide	75-15-0	EPA 8260	6.0
Chlorobenzene	68411-45-0	EPA 8260	0.62
Styrene	9003-53-6	EPA 8260	1.8
Carcinogenic Polycyclic Aromatic Hydrocarbons (cPAHs)			
Benzo(a)anthracene	56-55-3	EPA 8270 SIM	0.42
Benzo(a)pyrene	50-32-8	EPA 8270 SIM	0.042
Benzo(b)fluoranthene	205-99-2	EPA 8270 SIM	0.42
Benzo(k)fluoranthene	207-08-9	EPA 8270 SIM	4.2
Chrysene	218-01-9	EPA 8270 SIM	33
Dibenzo(a,h)anthracene	53-70-3	EPA 8270 SIM	0.042
Indeno(1,2,3-cd)pyrene	193-39-5	EPA 8270 SIM	0.42
Non-Carcinogenic Polycyclic Aromatic Hydrocarbons (PAHs)			
1-Methylnaphthalene	90-12-0	EPA 8270 SIM	22
2-Methylnaphthalene	91-57-6	EPA 8270 SIM	3.3
Acenaphthene	83-32-9	EPA 8270 SIM	52
Acenaphthylene	208-96-8	EPA 8270 SIM	78
Anthracene	120-12-7	EPA 8270 SIM	1,040
Benzo(g,h,i)perylene	191-24-2	EPA 8270 SIM	1,178
Fluoranthene	206-44-0	EPA 8270 SIM	364
Fluorene	86-73-7	EPA 8270 SIM	55
Naphthalene	91-20-3	EPA 8270 SIM	1.1
Phenanthrene	85-01-8	EPA 8270 SIM	79
Pyrene	129-00-0	EPA 8270 SIM	359

Analyte	CAS No.	Analytical Method	Screening Level[1] (mg/kg)
Semivolatile Organic Compounds (SVOCs)			
2-Chloronaphthalene	91-58-7	EPA 8270	128
2-Methylphenol	95-48-7	EPA 8270	1.8[3]
3 & 4 Methylphenol	106-44-5	EPA 8270	0.14
4-Nitroaniline	100-01-6	EPA 8270	0.0030
Bis(2-chloroethoxy)methane	111-91-1	EPA 8270	NE
Bis(2-ethylhexyl)phthalate	117-81-7	EPA 8270	12
Butyl benzyl phthalate	85-68-7	EPA 8270	511
Carbazole	86-74-8	EPA 8270	NE
Dibenzofuran	132-64-9	EPA 8270	6.1
Diethylphthalate	84-66-2	EPA 8270	28
Di-n-butyl phthalate	84-74-2	EPA 8270	31
Di-n-octyl phthalate	117-84-0	EPA 8270	1,829
Phenol	13127-88-3	EPA 8270	7.4
Polychlorinated Biphenyls (PCBs)			
Total PCBs (sum of Aroclors)	1336-36-3	EPA 8082	0.15

Notes:

[1] Or lowest obtainable analytical detection level. Values referenced from December 2010 Draft Final Engineering Evaluation/Cost Estimate (E&E, 2010).

[2] Value for total xylenes

[3] Value is for 4-methylphenol

mg/kg = milligram per kilogram

EPA = Environmental Protection Agency

NE = not established

Table B-4

Summary of Surface Soil Basline Chemical Analytical Data[1]

Avery Landing Site
Avery, Idaho

Sample ID[2]:	BL01 & BL07V	BL02 & BL08V	BL03 & BL09V	BL04 & BL10V	BL05 & BL11V
Sample Location:	**Soil Staging Area**	**Soil Staging Area**	**Soil Staging Area**	**Overburden Stockpile Area**	**Construction Staging Area**
Sample Date:	**6/4/2012**	**6/4/2012**	**6/4/2012**	**6/4/2012**	**6/4/2012**
Petroleum Hydrocarbons (TPH; mg/kg)					
Diesel-range	6 JQ		7.9 JQ	7.3 JQ	11 JQ
Heavy oil-range					
Volatile Organic Compounds (VOCs; µg/kg)					
Trichloroethene					
2-Butanone	R	R	R	2.34 JQ	3.21 JQ
Acetone				8.08 JH	14 JH
Styrene				0.326 JQ	
Polychlorinated Biphenyls (PCBs; µg/kg)					
Total PCBs (sum of Aroclors)				4.37	6.55

Notes:

[1] Soil samples obtained by EPA to document baseline conditions for the 2012 removal action. Only postitively detected compouneds are listed.

[2] Sampling areas/locations are shown on Figure B-2.

mg/kg = milligram per kilogram

µg/kg = microgram per kilogram

JH = Positive detection, but approximate concentration with high bias.

JQ = Positive detection, result is between method detection limit and reporting limit.

R = Result rejected due to deficencies in ability to analyze sample and meet quality control criteria. Result cannot be verified.

N
W E
S

10 0 10
Miles

Notes:
1. The locations of all features shown are approximate.
2. This drawing is for information purposes. It is intended to assist in showing features discussed in an attached document. GeoEngineers, Inc. can not guarantee the accuracy and content of electronic files. The master file is stored by GeoEngineers, Inc. and will serve as the official record of this communication.
3. It is unlawful to copy or reproduce all or any part thereof, whether for personal use or resale, without permission.

Data Sources: ESRI Data & Maps

Projection: NAD 1983 UTM Zone 11N

Vicinity Map

Avery Landing Site
Avery, Idaho

GeoEngineers

Figure B-1

Path: \\sea\Projects\2\2315016\GIS\231501602_VicinityMap.mxd Map Revised: 14 December 2012 amanza

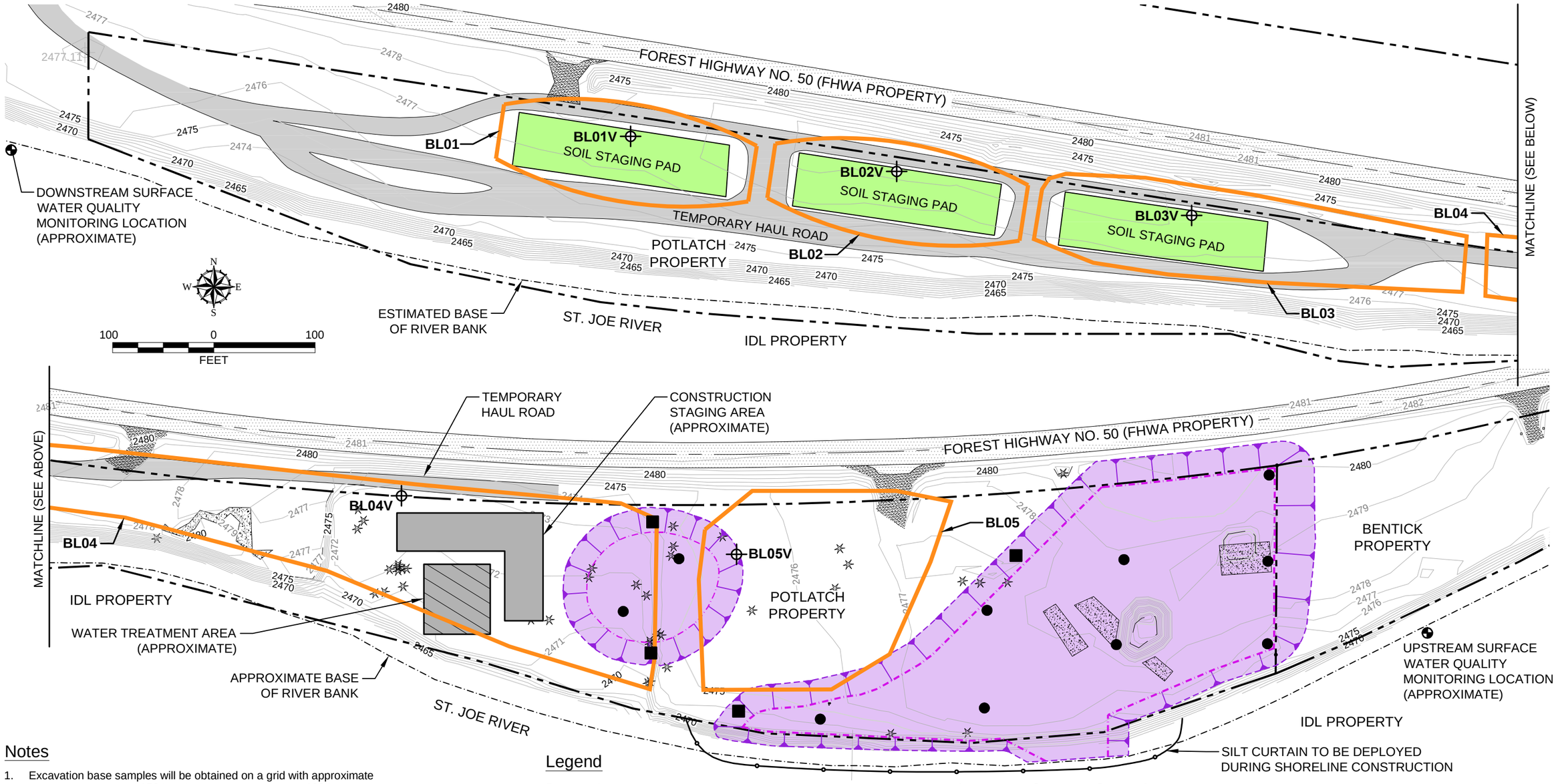

Notes

1. Excavation base samples will be obtained on a grid with approximate intervals consisting of 150 feet (along plume length) by 100 feet (along plume width).
2. Excavation sidewalls samples will be obtained at approximately every 300 linear feet.
3. The locations of all features shown are approximate.
4. This drawing is for information purposes. It is intended to assist in showing features discussed in an attached document. GeoEngineers, Inc. cannot guarantee the accuracy and content of electronic files. The master file is stored by GeoEngineers, Inc. and will serve as the official record of this communication.

Reference: Existing topographic contours, property boundaries, site features including concrete, existing trees, and other miscellaneous features shown on this figure are based on Meckel Enginineering & Surveying survey file dated May 24, 2012 and September 25, 2012.

Legend

- Property Line
- 2480 — Existing Topographic Contours (Feet - NAVD 88)
- Maximum Expected Limits of Remedial Excavation (Top of Slope)
- Expected Base of Remedial Excavation
- Existing Trees
- Excavation Base Samples (See Note 1)
- Excavation Sidewall Samples (See Note 2)
- Approximate Composite Sample Area (EPA 2012 Removal Action)
- Approximate Discrete Sample Area (EPA 2012 Removal Action)

IDL = Idaho Department of Lands

FHWA = Federal Highway Administration

Remedial Action Sampling Plan

Avery Landing Site
Avery, Idaho

GeoEngineers

Figure B-2

P:\23\50\6\02\CAD\SSSP\23\50\6-02 SSSP Fig B-2 Remedial Action Sampling Plan.dwg\TAB:LANDSCAPE MODIFIED BY TMICHAUD ON APR 01, 2013 - 10:50

FIGURE 8 WAVEIONICS™ EC
Treatment Equipment Layout
Start-up Sampling (PH.1)

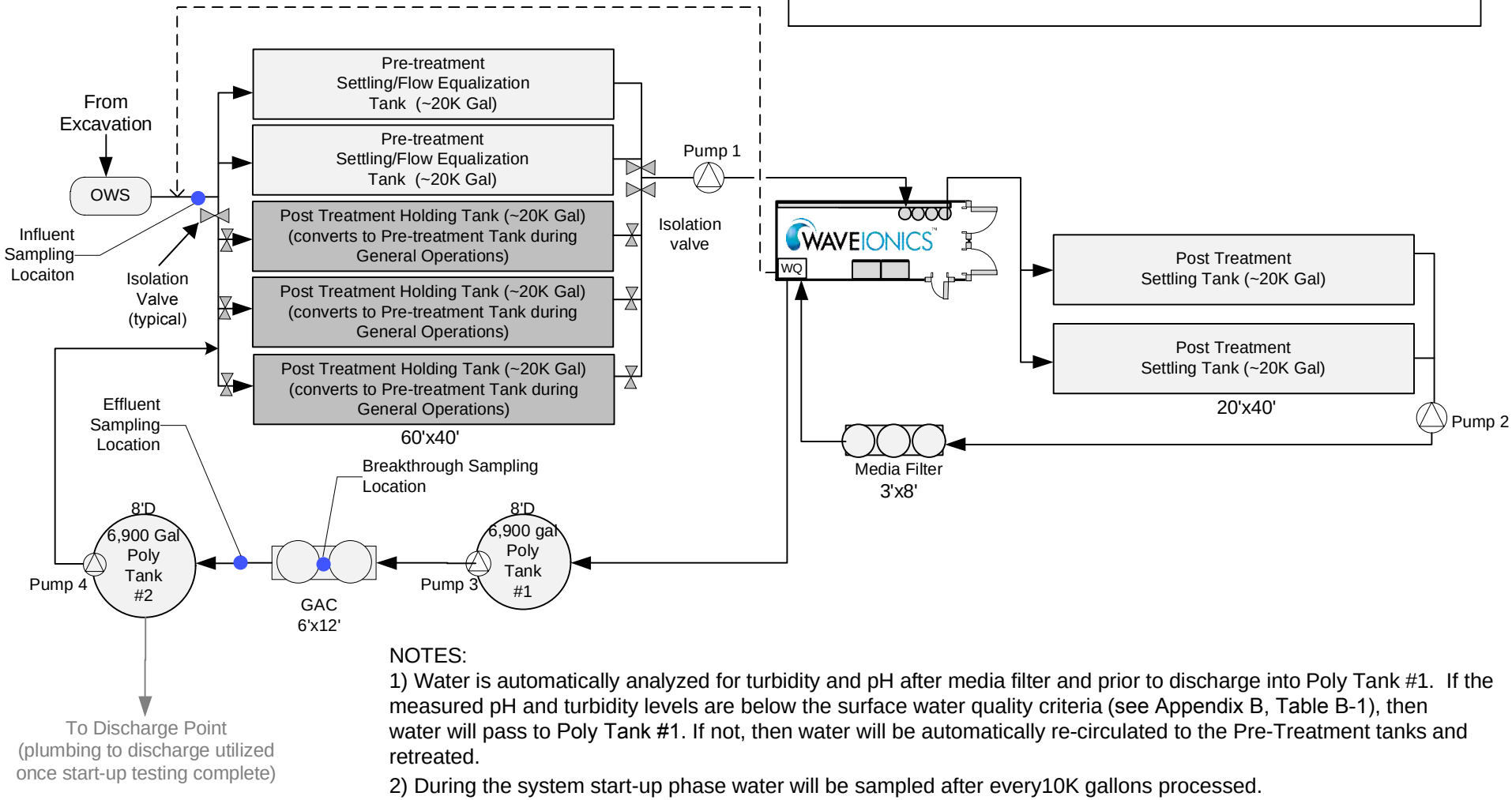

NOTES:

1) Water is automatically analyzed for turbidity and pH after media filter and prior to discharge into Poly Tank #1. If the measured pH and turbidity levels are below the surface water quality criteria (see Appendix B, Table B-1), then water will pass to Poly Tank #1. If not, then water will be automatically re-circulated to the Pre-Treatment tanks and retreated.

2) During the system start-up phase water will be sampled after every10K gallons processed.

3) Isolation Valves will be installed during system set-up and used during the start-up phase to segregate the holding tanks. The valves will be open during General Operations Phase 2 to meet pre-treatment detention and flow equalization needs.

4) Actual placement of components may differ based on site constraints. Flow path through the system will remain the same.

Client: PACIFIC PILE & MARINE	
Project: Avery Landing (aka Potlatch Clean-up)	
Date: 4/8/2013	Rev: 2
By: L.Doty	WATERTECTONICS

FIGURE 9 WAVEIONICS™ EC
Treatment Equipment Layout
General Operations (PH.2)

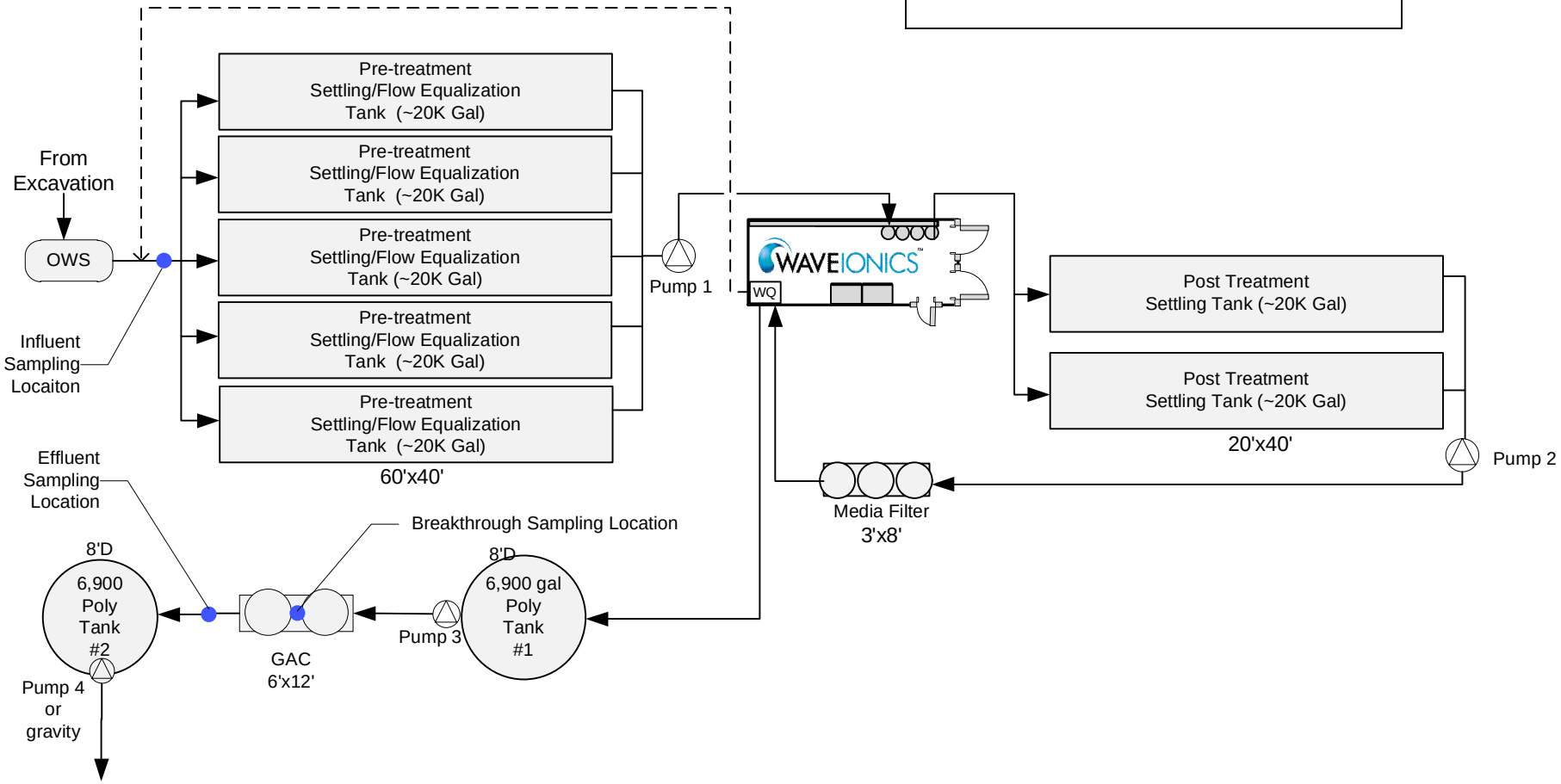

NOTES:
1) Water is automatically analyzed for turbidity and pH after media filter and prior to discharge into Poly Tank #1. If the measured pH and turbidity levels are below the surface water quality criteria (see Appendix B, Table B-1), then water will pass to Poly Tabk #1. If not, then water will be automatically re-circulated to the Pre-Treatment tanks and retreated.
2) Actual placement of components may differ based on site constraints. Flow path through the system will remain the same.

Client: PACIFIC PILE & MARINE	
Project: Avery Landing (aka Potlatch Clean-up)	
Date: 4/8/2013	Rev: 3
By: L.Doty	WATERTECTONICS

APPENDIX C
Quality Assurance Project Plan

Quality Assurance Project Plan

Avery Landing Site
Avery, Idaho

for
U.S. Environmental Protection Agency on Behalf of Potlatch Land and Lumber, LLC

May 13, 2013

GeoEngineers

Plaza 600 Building
600 Stewart Street, Suite 1700
Seattle, Washington 98101
206.728.2674

Quality Assurance Project Plan

Avery Landing Site
Avery, Idaho

File No. 2315-017-02

May 13, 2013

Approved By:

Signature: Date: May 13, 2013

John M. Herzog, PhD, Principal, GeoEngineers

Signature: Date: May 13, 2013

Robert S. Trahan, Environmental Geologist, GeoEngineers

Signature: Date: May 13, 2013

Mark J. Lybeer, Quality Assurance Leader, GeoEngineers

RST:JMH:csv

Disclaimer: Any electronic form, facsimile or hard copy of the original document (email, text, table, and/or figure), if provided, and any attachments are only a copy of the original document. The original document is stored by GeoEngineers, Inc. and will serve as the official document of record.

Copyright© 2013 by GeoEngineers, Inc. All rights reserved.

GeoEngineers

Table of Contents

1.0 INTRODUCTION C-1

2.0 PROJECT MANAGEMENT AND ORGANIZATION C-1

2.1. Project Organization and Responsibilities C-1
2.1.1. Regulatory Project Manager and Federal On-Scene Coordinator C-2
2.1.2. Potlatch Project Manager C-2
2.1.3. Technical Project Manager C-2
2.1.4. Task Manager C-3
2.1.5. Field Coordinator C-3
2.1.6. Technical/Field Staff C-3
2.1.7. Quality Assurance Leader C-3
2.1.8. Health and Safety Manager C-4
2.1.9. Laboratory Project Manager C-4
2.2. Problem Definition and Background C-4
2.2.1. Background Information C-4
2.2.2. Problem Statement C-4
2.3. Project and Task Description C-4
2.3.1. Project Description C-4
2.3.2. Task Description C-5
2.3.3. Project Schedule C-5
2.4. Quality Objectives and Criteria C-6
2.4.1. Project Quality Objectives C-6
2.4.2. Chemical Data Quality Objectives C-6
2.5. Special Training/Certifications C-9
2.6. Documentation and Records C-9

3.0 DATA GENERATION AND ACQUISITION C-9

3.1. Sample Process Design C-10
3.1.1. Soil Excavation C-10
3.1.2. Excavated Soil C-10
3.1.3. Import Fill Material C-11
3.1.4. Surface Water C-11
3.1.5. Air C-11
3.1.6. Treated Water C-11
3.1.7. Groundwater C-11
3.2. Sampling Methods C-11
3.2.1. Soil Sampling Equipment C-11
3.2.2. Water Sampling Equipment C-12
3.2.3. Decontamination Procedures C-12
3.2.4. Field Screening C-13
3.3. Analyte-Specific Considerations C-14
3.4. Field Documentation C-14
3.5. Sample Nomenclature C-15
3.6. Sample Preservation, Container and Hold Times C-17
3.7. Discrepancies C-17

3.8. Sample Handling and Custody C-17
3.9. Analytical Methods C-19
3.10. Quality Control C-19
3.10.1. Field Quality Control C-20
3.10.2. Laboratory Quality Control C-21
3.11. Instrument/Equipment Testing, Inspection, and Maintenance C-23
3.11.1. Field Instrumentation C-23
3.11.2. Laboratory Instrumentation C-23
3.12. Instrument/Equipment Calibration and Frequency C-24
3.13. Inspection/Acceptance of Supplies and Consumables C-24
3.14. Non-Direct Measurements C-24
3.15. Data Management C-24
3.15.1. Data Collection C-24
3.15.2. Data Reduction C-25
3.15.3. Data Review C-25
3.15.4. Data Reporting C-26
3.15.5. Electronic Deliverables C-26
3.15.6. Data Archival and Retrieval C-27

4.0 ASSESSMENT AND OVERSIGHT C-27

4.1. Assessments and Response Actions C-27
4.1.1. Review of Field Documentation and Laboratory Receipt Information C-28
4.1.2. Response Actions for Field Sampling C-28
4.1.3. Corrective Action for Laboratory Analyses C-28
4.2. Reports to Management C-29

5.0 DATA VALIDATION AND USABILITY C-29

5.1. Data Review, Verification and Validation C-29
5.2. Verification and Validation Methods C-30
5.3. Reconciliation With User Requirements C-31

6.0 LIMITATIONS C-31

7.0 REFERENCES C-31

LIST OF TABLES

Table C-1. Measurement Quality Objectives
Table C-2. Reporting Limits and Screening Values for Soil Samples
Table C-3. Reporting Limits and Screening Values for Water Samples
Table C-4. Test Methods, Sample Containers, Preservation and Holding Times
Table C-5. Quality Control Samples – Type and Frequency

LIST OF ATTACHMENTS

Attachment C-1. Sample Plan Alteration Form
Attachment C-2. Corrective Action Form

1.0 INTRODUCTION

This document presents the Quality Assurance Project Plan (QAPP) for the environmental sampling activities to be completed as part of the Avery Landing Site (Site) removal action. The Site is located approximately one mile west of Avery, Idaho. This QAPP is to be used in conjunction with the Site Specific Sampling Plan (SSSP) which is presented in Attachment B of the Avery Landing Removal Action Work Plan (Work Plan; GeoEngineers, 2013). The information contained in this QAPP is based on information available at the time of preparation. This QAPP may be updated as additional information becomes available.

The QAPP and associated SSSP were prepared in general accordance with the requirements of 40 CFR 300.415(b)(4)(ii), EPA's Requirements for Quality Assurance Project Plans (EPA, 2001) and EPA's Guidance for Quality Assurance Project Plans (EPA, 2002).

2.0 PROJECT MANAGEMENT AND ORGANIZATION

The project management and organization elements of the QAPP as detailed below address the basic area of project management including the roles and responsibilities of the participants, the project description, quality objectives and criteria, special training/certification and documents and records.

2.1. Project Organization and Responsibilities

Key individuals and positions providing quality assurance (QA) and quality control (QC) are summarized in the following table. A description of the responsibilities, lines of authority and communication for the key individuals and positions providing QA and QC is presented in Sections 2.1.1 through 2.1.8. This element of the plan ensures that the each key project participant has a defined role.

Project Role	Name Organization	Telephone Email Address
Regulatory Project Manager/ On-Scene Coordinator	Earl Liverman EPA	208.664.4858 Liverman.earl@epamail.epa.gov Coeur d'Alene Field Office 1910 Northwest Boulevard, Suite 208 Coeur d'Alene, Idaho 83814
Potlatch Project Manager	Terrance Cundy Potlatch	208-301-0410 Terry.Cundy@potlatchcorp.com 530 S. Asbury, Suite 4 Moscow, Idaho 83843
Technical Project Manager	John Herzog GeoEngineers	206.406.6431 jherzog@geoengineers.com 600 Stewart Street, Suite 1700 Seattle, Washington 98101

Project Role	Name Organization	Telephone Email Address
Task Manager/Field Coordinator	Robert Trahan GeoEngineers	206.239.3253 rtrahan@geoengineers.com 600 Stewart Street, Suite 1700 Seattle, Washington 98101
Health and Safety Manger	Wayne Adams GeoEngineers	206.239.3253 wadams@geoengineers.com 1101 Fawcett Avenue, Suite 200 Tacoma, Washington 98402
Quality Assurance Leader	Mark Lybeer GeoEngineers	206.278.2674 mlybeer@geoengineers.com 600 Stewart Street, Suite 1700 Seattle, Washington 98101
Laboratory Project Manager	Randee Decker Test America	509.924.9200 randee.decker@testamericainc.com 11922 E 1st Avenue Spokane, WA 99206

2.1.1. Regulatory Project Manager and Federal On-Scene Coordinator

The Regulatory Project Manager is responsible for overseeing the implementation of the work to be performed under the Administrative Settlement Agreement and Order on Consent. The Regulatory Project Manager will review and approve the QAPP and subsequent revisions and amendments.

2.1.2. Potlatch Project Manager

The Potlatch Project Manager's duties consist of implementing the project approach and tasks, overseeing the project team members during performance of project tasks.

2.1.3. Technical Project Manager

The Technical Project Manager is responsible for fulfilling contractual and administrative control of the project. The Technical Project Manager's duties include defining the project approach and tasks, selecting project team members and establishing budgets and schedules.

The Technical Project Manager's duties also include implementing the project approach and tasks, overseeing project team members during performance of project tasks, adhering to and communicating the status of budgets and schedules to the Potlatch Project Manager, providing technical oversight, and providing overall production and review of project deliverables. The Technical Project Manager shall maintain the official, approved SSSP/QAPP and shall be responsible for distributing updated documents to the recipients listed in Section 2.1.

2.1.4. Task Manager

The individual task managers are responsible for the daily management of project tasks including providing technical direction to the field staff, produces task specific documents including the QAPP, SSSP, and Health and Safety Plan (HASP), develops schedules and allocates resources for field tasks, coordinates data collection activities to be consistent with information requirements, supervises the compilation of field data and laboratory analytical results, assures that data are correctly and completely reported, implements and oversees field sampling in accordance with project plan and supervises field personnel. Additionally, the Task Manger coordinates work with on-site subcontractors, verifies that appropriate sampling, testing, and measurement procedures are followed, coordinates the transfer of field data, sample tracking forms, and log books to the Project Manager for data reduction and validation, and participates in QA corrective actions as required.

2.1.5. Field Coordinator

The Field Coordinator will lead the field sampling effort for the project, serving as the direct point of contact between the Task Manager, analytical laboratory, and subcontractors and ensures that the appropriate sampling containers, chain-of-custody (COC) forms and field sampling gear including personal protective equipment (PPE) are available. The Field Coordinator is to ensure that data collection activities are consistent with information requirements and to assure that field information is correctly and completely reported for the entire duration of the project. The Field Coordinator will also coordinate appropriate sampling, testing, and measurement procedures and schedule sample delivery/shipment with the analytical laboratory. The Field Coordinator will transfer field data and sample tracking forms to the project file and data reduction and validation and participate in QA corrective actions as required.

2.1.6. Technical/Field Staff

Technical/Field Staff have the primary responsibility for duties involve field data collection and documentation. Technical/Field Staff are responsible for:

- Understanding and following the QAPP and SSSP.
- Checking all equipment and supplies in advance of field operations.
- Ensuring that samples are properly collected, preserved, labeled, packaged, and shipped.
- Ensuring that all field data are carefully recorded and preserved according to the QAPP and SSSP.
- Following chain-of-custody procedures and standard operating procedures when they are required.

2.1.7. Quality Assurance Leader

The Quality Assurance Leader will provide oversight required for the completion of sample analyses for the project and verify, in conjunction with the laboratory manager, that the analytical work is proceeding in accordance with internal laboratory standard practices and the QA/QC guidelines for the project. This person will also oversee completion of data validation activities completed for this

project. The Quality Assurance Leader maintains independence from the individual(s) generating the data.

2.1.8. Health and Safety Manager

The Health and Safety Manager will oversee implementation of health and safety programs and verify that work on the project proceeds in accordance with the site-specific HASP.

2.1.9. Laboratory Project Manager

The Laboratory Project Manager will fulfill the analytical requirements of this project including being responsible for sample analyses using appropriate analytical laboratory methods. The specific procedures to be used for COC transfer, internal calibrations, laboratory analyses, reporting, preventive instrument maintenance, and corrective action will follow standard protocols.

2.2. Problem Definition and Background

Detailed information regarding historical operations, previous environmental investigations, regulatory history and previous cleanup actions are presented in the Engineering Evaluation/Cost Analysis (EE/CA) Work Plan prepared by Golder and Associates (Golder, 2009) for Potlatch, Draft Final EE/CA report prepared by Ecology and Environment for EPA (E&E, 2010), and Supplemental Investigation Report (GeoEngineers, 2011). Site history, results of previous investigations and current conditions are summarized below.

2.2.1. Background Information

Detailed information regarding Site and operational history, previous investigations and regulatory history and cleanup actions are presented in EPA's EE/CA (E&E, 2010) and/or Potlatch's Supplemental Investigation Report (GeoEngineers, 2011) and is summarized in the Work Plan.

2.2.2. Problem Statement

Pursuant to the Action Memorandum for the Avery Landing Site (EPA, 2011), and agreements with EPA, Potlatch will perform removal actions followed by post-removal action groundwater monitoring to monitor natural attenuation of contaminants identified by previous environmental investigations of soil, groundwater and river sediment at the Site.

2.3. Project and Task Description

2.3.1. Project Description

In accordance with the EE/CA (E&E, 2010) the selected removal action involves the excavation and removal of subsurface soil contaminated with petroleum hydrocarbons (diesel and heavy oil). Removal of this material is expected to significantly reduce or eliminate the source and prevent the continued discharge of petroleum hydrocarbons and hazardous substances into the St. Joe River. Residual contamination remaining at the Site will attenuate by way of natural processes over-time and the progress of these processes will be monitored.

During the summer/fall of 2012, EPA performed cleanup activities on the parts of the Site owned by Larry and Ethel Bentcik (Bentcik), the United States administered by the Federal Highway Administration (FHWA), the Idaho Department of Lands (IDL), and Potlatch to remove contaminated

materials from the Site. Contaminated materials were excavated from property owned by Potlatch to address a portion of the St. Joe River shoreline where petroleum discharges were historically observed and to install stable side slope transitions between the Bentcik property and the FHWA property excavation areas and the Potlatch property.

Additional excavation activities will be performed by Potlatch in the summer/fall of 2013 to remove residual contamination remaining at the Site. The objectives of the removal action are to:

- Remove the remaining components of the product containment, collection, and extraction systems that were installed as part of the 1994 and 2000 removal actions;
- Remove soil exceeding field screening methods within the upland and river bank areas;
- Remove, treat, and/or manage petroleum product that is present as light Non-Aqueous Phase Liquids (LNAPL) on groundwater within the excavations;
- Dispose of waste streams in accordance with Comprehensive Environmental Response, Compensation, and Liability Act (CERCLA) off-site rule requirements; and
- Restore portions of the Site affected by the removal action including river bank reconstruction, backfilling, compaction, grading and re-vegetation.

The design and approach for the removal action that will be performed by Potlatch are presented in the Work Plan.

2.3.2. Task Description

Sampling activities that will be conducted during the removal action will include collecting soil, treated water, and post-removal action groundwater samples for chemical analysis at a contract laboratory. In addition, field screening of soil will be conducted to evaluate the presence of petroleum contamination during excavation, surface water monitoring will be conducted at locations upstream and downstream to evaluate potential impacts to the St. Joe River resulting from the removal action, and air monitoring for particulate matter will be conducted at locations upwind and downwind using field instruments to determine if Site activities are generating particulate concentrations that exceed applicable regulatory standards at the project boundary.

Specific details of the sampling activities that will be conducted during the removal action are presented in the SSSP (Appendix B of the Work Plan).

2.3.3. Project Schedule

Removal action activities being performed by Potlatch will be completed summer/fall of 2013. Post-removal action groundwater monitoring will be performed following completion of the removal action as approved by EPA. A schedule for mobilization/demobilization, sampling activities, and reporting are presented in the Work Plan.

2.4. Quality Objectives and Criteria

2.4.1. Project Quality Objectives

Data quality objectives for sampling activities that will be performed for the removal action are presented in the SSSP (Appendix B of the Work Plan). The SSSP provides information about specific analytes, measurement objectives, method requirements and data uses for the removal action.

2.4.2. Chemical Data Quality Objectives

The quality assurance objectives for technical data are to collect environmental monitoring data of known, acceptable, and documentable quality. The QA objectives established for the project are:

- Implement the procedures outlined herein for field sampling, sample custody, equipment operation and calibration, laboratory analysis, and data reporting that will facilitate consistency and thoroughness of data generated.
- Achieve the acceptable level of confidence and quality required so that data generated are scientifically valid and of known and documented quality. This will be performed by establishing criteria for precision, accuracy, representativeness, completeness, and comparability, and by testing data against these criteria.

The sampling design, field procedures, laboratory procedures, and QC procedures are set up to provide high-quality data for use in this project. Specific data quality factors that may affect data usability include quantitative factors (bias, sensitivity, precision, accuracy, and completeness) and qualitative factors (representativeness and comparability). The measurement quality objectives (MQO) associated with these data quality factors are summarized in Table C-1 and are discussed below.

2.4.2.1. SENSITIVITY

The primary measurement quality objective for this project is to analyze for chemicals at Practical Quantitation Limits (PQLs) less than target reporting limits (TRLs). These limits are provided in Tables C-2 and C-3. In order to meet these TRLs, the laboratory will report the analyte concentrations detected at or above the Method detection Limits (MDLs) but less than Method Reporting Limits (MRL) as “estimated.”

2.4.2.2. ACCURACY AND BIAS

Accuracy is a statistical measurement of correctness and includes components of random error (variability due to imprecision) and systemic error. It reflects the total error associated with a measurement. A measurement is accurate when the value reported does not differ from the true value or known concentration of the spike and standard. Analytical accuracy is measured by comparing the percent recovery of analytes or surrogates spiked into a sample or QC sample [matrix spike (MS), matrix spike duplicate (MSD) or laboratory control sample (LCS)] to the control limits listed in Table C-1. Accuracy is calculated using the following formula:

$$\%R = \frac{100(xs - xu)}{K}$$

Where: *%R* = percent recovery of spike (also known as matrix spike recovery [MSR]).

xs = measured value for spiked sample.

xu = measured value for unspiked sample.

K = known value of the spike in the sample.

Bias is a systemic or persistent distortion of a measurement process that causes errors in one direction. It usually is associated with the idea of obtaining data that will lead to a consistently "low" or consistently "high" concentration of a given target analyte.

2.4.2.3. PRECISION

Precision measures the reproducibility of the measurements calculated using the data generated in the analysis of laboratory duplicate samples. Each duplicate analysis will be recorded on the appropriate form, and the equations used to calculate the precision of data should be included. If the difference of the value between two duplicate samples exceeds the MQOs (Table C-1), then the precision should be judged to be out of control and the analyst should be instructed to confirm the source of the precision error. Once confirmed and remedied, the analysis will be rerun providing acceptable precision limits, and the data can then be reported.

Precision is measured using the relative percent difference (RPD) from pairs of duplicate measurements, calculated as follows:

$$\%RPD = \frac{100(d1 - d2)}{\left[\frac{d1 - d2}{2}\right]}$$

Where: *%RPD* = percent relative difference.

d1 and *d2* = the concentrations of the two measurements.

RPD can be calculated using duplicate analyses in the case where an analyte is detected. If an analyte is not detected, the RPD can be calculated from the percent recoveries of the matrix spike (MS) and matrix spike duplicate (MSD) analyses.

2.4.2.4. COMPLETENESS

Completeness is calculated for the aggregation of data for each analyte measured for any particular sampling event or other defined set of samples. Completeness is calculated and reported for each method, matrix, and analyte combination. The number of valid results divided by the number of possible individual analyte results, expressed as a percentage, determines the completeness of the data set. For completeness requirements, valid results are all results not rejected through data validation. For this project, the requirement for completeness is 90 percent (%).

The following equation is used to calculate completeness:

$$\%\ completeness = \frac{number\ of\ valid\ results\ \times 100}{number\ of\ possible\ results}$$

For instances when samples could not be analyzed (i.e., because of holding time violations for which re-sampling and analysis were not possible, samples that were spilled or broken, etc.), the numerator of this equation becomes the number of valid results minus the number of possible results not reported.

2.4.2.5. COMPARABILITY

Comparability is the qualitative term that expresses the measure of confidence that two data sets or batches can contribute to a common analysis and evaluation. Comparability with respect to laboratory analyses pertains to method type comparison, holding times, stability issues, and aspects of overall analytical quantitation. The following items are evaluated when assessing data comparability:

- Whether two data sets or batches contain the same set of parameters.
- Whether the units used for each data set are convertible to a common scale.
- Whether similar analytical procedures and quality assurance were used to collect data for both data sets.
- Whether the analytical instruments used for both data sets have approximately similar detection levels.
- Whether samples within data sets were selected and collected in a similar manner.

To ensure data comparability, standard sample collection and analytical methods/procedures will be used for this project.

2.4.2.6. REPRESENTATIVENESS

Representativeness expresses the degree to which data accurately and precisely represents a characteristic of a population, a process condition, an environmental condition, or parameter variations at a sampling point.

Representativeness is assessed by way of evaluating issues such as (but not limited to) sampling methods, analytical methods used, holding times, laboratory blanks, field blanks, COC records, detection limits, and sample dilutions. The field QA/QC procedures for sample handling, including COC records, will provide for sample integrity until the time of analysis. To make certain that the analytical results of this assessment are representative of the true field conditions, appropriate laboratory QA/QC procedures (as indicated in this QAPP) should be followed.

The degree to which the data are representative of the field conditions will be evaluated during the Quality Assurance Leader's review of the analytical data. The results of the validation review will be summarized in the Data Validation Report.

2.5. Special Training/Certifications

The Field Coordinator and field staff will be up-to-date on their Hazardous Waste Operations and Emergency Response (HAZWOPER) training and will be certified in cardiopulmonary resuscitation (CPR) and first aid. This training is provided via online and in-class annual or biennial training. All field staff will be knowledgeable in and understand the proper technical protocols for collecting soil samples for all analytes including petroleum hydrocarbons, VOCs, SVOCs, PCBs and metals.

Records documenting HAZWOPER and CPR/First Aid certifications are documented in the Site Health and Safety Plan (HASP) presented in Appendix D of the Work Plan and are also kept by the Health and Safety Manager.

2.6. Documentation and Records

The approved final SSSP/QAPP will be maintained in electronic format by the Project Manager, in Microsoft Word© format and in an Adobe portable document format (PDF). One hard copy of the SSSP/QAPP will be utilized by field staff to ensure consistency with protocols.

The following documents will be produced during the removal action construction:

- Daily field report that documents field sampling activities will be performed by the field staff and maintained in both electronic and hard copy formats. The field report will include information on field forms or in the field notebook including daily activities, field screening results, samples collected, and surface water quality and air particulate monitoring results. Other information included in the field report is listed in Section 3.4.

Records will be retained by GeoEngineers, Inc. in hard copy and in electronic Microsoft Word and/or PDF format for at least 10 years. Electronic data is backed up daily in-office and also sent to a centralized data center for off-site storage.

Individuals identified in Section 2.1 will receive updated versions of the SSSP/QAPP electronically (via email with attached PDF). The Technical Project Manager will distribute the updated documents as they become available.

3.0 DATA GENERATION AND ACQUISITION

The data generation and acquisition elements of the QAPP (as detailed below) address aspects of the project design and implementation including the appropriate methods for sampling, measurement and analysis, data collection or generation, data handling, and how QC activities are employed and properly documented.

The information presented herein applies directly to the selection of sampling locations and field sampling methodology. The sample nomenclature, the number of samples to be collected, and the rationale for sampling and choosing the appropriate sample locations are presented in this section of the QAPP. Sampling methods including field documentation, sampling and decontamination procedures, are also discussed below.

3.1. Sample Process Design

Specific details of the sampling activities (i.e., sample locations, frequency, field and laboratory analysis, and rational) that will be conducted during the removal action are presented in the SSSP (Appendix B of the Work Plan).

3.1.1. Soil Excavation

Soil excavation activities will be performed to remove petroleum contaminated soil from the Site. During excavation, visual observation and field screening (discussed in Section 3.2.4) will be used to determine the final excavation extent and for segregating overburden soil from the underlying petroleum contaminated soil.

At the final limits of excavation as determined by EPA, sidewall and base soil samples will be obtained and submitted for chemical analysis at a contract laboratory to identify the baseline concentrations for natural attenuation monitoring. Sidewall samples will be obtained at a frequency of one per 300 linear feet of excavation sidewall. Excavation sidewall samples will be obtained at the approximate vertical midpoint of the observed petroleum-contaminated soil layer. Potlatch will use discretion with respect to collection of sidewall samples from the transitions between the Potlatch and FHWA properties, Potlatch and IDL properties, or Potlatch and Bentcik properties since the sidewall is comprised of clean backfill material placed by EPA. Sidewall samples will be collected from these transitions to confirm any areas suspected to have been re-contaminated as part of the transition area construction. Base samples will be obtained on a grid pattern with grid cells measuring approximately 150 feet (along the plume length) by approximately 100 feet (along the plume width). The location and orientation grid pattern being used for this removal action is based on EPA's 2012 removal action base sampling grid (E&E, 2012).

The approximate locations of base and sidewall samples based on the maximum expected limits of excavation are shown on Figure B-2 of the SSSP (Appendix B of the Work Plan). The actual soil sample locations will be determined based on the final excavation limit.

3.1.2. Excavated Soil

During excavation, visual observation and field screening (discussed in Section 3.2.4) will be used to determine the contact between the petroleum contaminated soil and overlying overburden. Soil in which visual and field screening evidence of petroleum contamination is observed will be exported from the Site and transferred to a permitted landfill. Overburden soil which does not exhibit visual and/or field screening evidence of contamination will be stockpiled on-Site pending reuse as backfill.

Petroleum contaminated soil generated from the saturated zone will be allowed to drain until a representative sample from the stockpile passes the Paint Filter Liquids Test (PFLT; EPA Method 9095). If requested by the receiving landfill, representative soil samples will be obtained at the frequency determined by the receiving landfill, and submitted to a fixed laboratory for chemical analysis.

3.1.3. Import Fill Material

Representative samples of the source material for imported fill soil will be submitted to a contract laboratory for chemical analysis of petroleum hydrocarbons (TPH), SVOCs, VOCs, and PCBs. Additionally, representative samples of the source material will be obtained and tested to determine maximum dry density using a modified proctor by ASTM D1557.

3.1.4. Surface Water

Surface water monitoring activities will be conducted at locations upstream, mid-Site and downstream of the removal action area using field instrumentation to determine if Site activities are affecting surface water quality in the river.

3.1.5. Air

Air monitoring for particulate matter will be conducted at locations upwind, mid-Site and downwind using field instrumentation to determine if Site activities are generating particulate concentrations that exceed action levels (presented in Table B-1 of the SSSP) at the project boundary.

3.1.6. Treated Water

Water samples will be obtained from the water treatment system during operation to ensure that water being discharged to the St. Joe River meet the surface water quality criteria for the project (water quality discharge criteria are presented in Table B-2 of the SSSP). Water samples will be analyzed for SVOCs, PCBs and metals.

3.1.7. Groundwater

Following completion of the removal action, monitoring wells will be installed and sampled for TPH, SVOCs, PCBs and VOCs to monitor groundwater conditions and natural attenuation of Site contaminants. A post-construction monitoring plan will be prepared for approval by EPA following completion of the removal action.

3.2. Sampling Methods

This section discusses the methodologies that will be used, and the Standard Operating Procedures that will be followed for sample collection, sample nomenclature, sample handling, COC preparation and decontamination.

3.2.1. Soil Sampling Equipment

Excavation limit soil samples will be collected directly from the excavation sidewalls/base using hand tools (i.e., stainless steel spoon) or by use of the excavation equipment (i.e., backhoe or excavator). Samples collected from the excavation equipment will be collected from the approximate middle of the excavator or backhoe bucket (i.e., material that has not come in contact with the bucket) using stainless steel spoons. Stockpile soil samples will be obtained directly from the stockpile using hand tools (i.e., stainless steel spoon). Excavation limit and stockpiles soil samples will be collected at a depth of approximately 2 to 6 inches into the exposed surface and containerized as specified by the testing laboratory with the sample location, date, time, and depth documented.

3.2.2. Water Sampling Equipment

Surface water quality samples will be collected directly from the St. Joe River using a container (i.e., glass jar) or container attached to a pole. Field instrumentation will be used to measure project specific water quality parameters (surface water quality parameters are presented in Table B-1 of the SSSP).

Water treatment system samples will be obtained directly from inline sampling ports or effluent water and containerized.

Groundwater samples obtained following completion of the removal action will be obtained using disposable Teflon bailers and/or using dedicated polyethylene tubing and peristaltic pump. Treatment system and groundwater samples will be placed in a laboratory specified container with the sample location, date, time, and depth documented.

Prior to groundwater sample collection, groundwater levels will be measured in each monitoring well using an electric water level indicator (e-tape) to the nearest 0.01 foot relative to the surveyed casing rim elevations.

3.2.3. Decontamination Procedures

Care will be made to collect samples representative of Site conditions including avoidance of cross-contamination between sample locations during field activities. The following decontamination procedures will be implemented during field activities to avoid cross-contamination:

- Disposable sampling equipment will be used when possible to minimize decontamination requirements. Non-disposable sampling equipment (i.e. stainless steel spoons, bowls, and depth to water meter) will be decontaminated prior to and after use. Decontamination procedures for this equipment will consist of the following:
    - Washing with a brush and non-phosphate detergent solution (e.g., distilled water and Alconox or Liqui-Nox);
    - Rinsing in a container of distilled water;
    - A final rinse by pouring distilled water over the equipment; and
    - Wrapping the decontaminated equipment in aluminum foil and placing the equipment in a disposable plastic bag for storage.
- Field sampling staff will use nitrile gloves and change them between each sample interval and sample location to prevent cross-contamination.
- Pre-cleaned, QA-tested, and previously unused sample jars provided by the Laboratory will be used to contain samples.
- Sample containers will be labeled immediately before they are used to contain a sample. Samples will be assembled and documented according to appropriate chain of custody (COC) procedures prior to delivering to the Laboratory including custody seals on each cooler in the event that the Field Staff who collected the sample is not the person delivering the containers.

3.2.4. Field Screening

Soil generated by the removal action will be screened in the field for the presence of petroleum hydrocarbons to determine whether soil is acceptable for reuse and to determine the lateral and vertical extent of the removal excavation.

The extent of excavation will be based on field screening methods (i.e., presence of free-phase petroleum hydrocarbons, oil-staining, sheen exceeding field screening criteria, or elevated field measured organic vapor). The procedure for conducting the petroleum sheen test will consist of collecting a representative soil sample and applying water until the soil is saturated and water collects around it.

3.2.4.1. VISUAL SCREENING

The soil will be observed for stains indicative of petroleum-related contamination. For example, dark brown, gray or black staining in the vadose zone may indicate petroleum contamination, but may also be caused by organic material or dark colored minerals present in the soil. Additionally, green, blue-gray or gray staining in soil in the vicinity of the water table may indicate petroleum contamination or may be caused by naturally-occurring bacteria that change soil from oxidizing to reducing conditions.

Within the saturated zone, water that is in contact with soil will be observed for visible oil, oil beads and/or sheen. Water sheen screening is further described in the following section (Section 3.2.4.2).

A passing test will be defined as soil that does not exhibit staining indicative of petroleum contamination or visible oil/sheen on water emanating from the soil. If visual evidence of petroleum contamination is observed or any of the other field screening methods indicate the presence of petroleum, additional excavation will be performed to remove the suspect soil and field screening will be completed to confirm the completeness of the excavated area.

3.2.4.2. WATER SHEEN SCREENING

Visual classification of the petroleum-related sheen from representative soil samples will be evaluated relative to the following field screening criteria:

- None (no sheen visually detected);
- Sheen (oil film present, but does not display rainbow); and
- Rainbow (definite oil sheen, film, or product that displays rainbow).

A passing test will be defined as soil that does not exhibit rainbow sheen. If rainbow sheen is observed in a sample or any of the other field screening methods indicate the presence of petroleum, additional excavation will be performed to remove the suspect soil and field screening will be completed to confirm the completeness of the excavated area.

3.2.4.3. HEADSPACE VAPOR SCREENING

This is a semi-quantitative field screening method that can help identify the presence or absence of VOCs in soil samples. A portion of the soil sample will be placed in a re-sealable plastic bag. The bag will then be sealed to the extent practicable, capturing air in the bag. The bag is then shaken

gently to expose the soil to the air trapped in the bag. The probe of a photoionization detector (PID) will then be inserted through a small opening in the bag, taking care not to clog the probe with soil. The maximum PID reading (in parts per million [ppm]) will be recorded on the field log for each sample. The PID will be calibrated to 100 ppm isobutylene in accordance with the manufacturer's recommendations. No soil samples used for headspace screening will be submitted to the laboratory for chemical analysis.

Headspace vapor measurements less than 5 ppm above background will define a passing test.

3.3. Analyte-Specific Considerations

For sample containers which may have preservative (e.g. VOCs), caution will be exercised to avoid spilling the preservative.

Staff will be trained in the correct procedures for collecting soil samples for VOC analysis in accordance with EPA Method 5035 requirements. As described in Section 3.2.1, approximately 2 to 6 inches of soil will be removed before collecting a sample to avoid VOC loss. A disposable soil plunger will be used to collect the required amount of soil. Soil will be placed into a pre-weighed container and sealed tightly to avoid VOC loss.

3.4. Field Documentation

The field staff will be responsible for documenting field sampling activities in an all-weather (e.g. "Rite-in-the-Rain") field notebook and on field logs, and by producing a draft technical field report at the end of each day of sampling. The field staff will also be responsible for implementing field QA/QC procedures in accordance with the methods outlined in this QAPP and general good practice sampling protocols. These procedures include recording and documenting relevant and appropriate information regarding project activities, sampling methods and data collected during performance of field activities at each sample location.

The following general guidelines should be followed in documenting fieldwork:

- Documentation will be maintained in a dedicated field notebook and on field forms.
- Notebook documentation will be completed in water proof ink or permanent marker and written errors will be crossed out with a single line.

Field notebooks will include records of pertinent activities related to specific sampling tasks. They will be bound books with sequentially numbered pages. The books will remain in the custody of the Field Coordinator until project completion, after which, the books will be kept in the project files.

The field notebook and forms will be maintained on a real-time basis and will include, where applicable and appropriate, the following information:

- Date, time of specific activities and weather conditions.
- Names of all personnel on the site, including visitors.
- Specific details regarding sampling activities, including sampling locations, type of sampling, depth, and sample numbers.

- Specific problems and resolutions.
- Identification numbers of monitoring instruments used that day.
- Chain-of-custody details, including sample identification numbers.

A draft field report will be prepared upon completion of field sampling activities each day. Field data that was recorded in the notebooks and field forms will be used to complete the field report. The field report will be used to document construction, sampling, and monitoring activities, sampling and Site personnel, and weather conditions, as well as decisions, corrective actions, and/or modifications to the project plans and procedures discussed in this report. The draft field report will be finalized following review by the Field Coordinator and/or Technical Project Manager and kept in the project files.

3.5. Sample Nomenclature

Samples collected by GeoEngineers will be identified according to station and sampling sequence. Sample designations will be such that they can be entered into the GeoEngineers environmental data management system in order to facilitate management, recovery, and reporting of data.

- Excavation soil sample nomenclature will follow this convention: Station designation – Sample number – Depth interval
    - Station designation is “EX”.
    - Sample number is sequential in order of collection (i.e., 1 through n).
    - Depth interval is feet below ground surface (bgs).
    - For example, the third excavation limit sample collected at a depth of 11 feet below ground surface (bgs) would be labeled EX-3-11.
- Stockpile sample nomenclature will follow this convention: Station designation – Sample number
    - Overburden stockpile station designation is “SPO”.
    - Contaminated stockpile station designation is “SPC”.
    - Dangerous waste stockpile station designation is “SPD”.
    - Sample number is sequential in order of collection (i.e., 1 through n).
    - For example, the second overburden stockpile sample collected would be labeled SPO-2.
- Import material sample nomenclature will follow this convention: Source Location – Date
    - For example, proposed import material sampled from “XYZ” quarry on January 5, 2013 would be labeled XYZ-01052013.
- Surface water sample nomenclature will follow this convention: Station Designation – Date
    - The upstream sample station designation is “SWQ-U”.
    - The mid-Site sample station designation is “SWQ-M”.
    - The downstream sample station designation is “SWQ-D”.

  - For example, a water sample obtained at the downstream station on August 1, 2013 would be labeled SWQ-D-08012013.

- Air monitoring sample nomenclature will follow this convention: Station Designation – Date
  - The upwind sample station designation is "AIR-U".
  - The mid-Site sample station designation is "AIR-M".
  - The downwind sample station designation is "AIR-D".
  - For example, an air quality measurement collected at the downwind station on August 4, 2013 would be labeled AIR-D-08042013.
- Treated water sample nomenclature will follow this convention: Station Designation – Date
  - The influent (pre-treatment) sample station designation is "TS-IN".
  - The primary granular activated carbon (GAC) effluent sample station designation is "TS-MID".
  - The effluent (post-treatment) sample station designation is "TS-EF".
  - The product sample station designation is "Product"
  - For example, a pre-treatment water sample collected from the treatment system on July 5, 2013 would be labeled TS-IN-07052013.
- Pre-use characterization sample nomenclature will follow this convention: Designation – Sample Number
  - The sample designation is "BL-PL".
  - The sample number will reference the previously obtained baseline same collected by EPA as part of the 2012 removal action.
- Rinsate sample nomenclature will follow this convention: Designation – Sample Number – Date
  - The sample designation is "Rinsate".
  - Sample number is sequential in order of collection (i.e., 1 through n).
  - For example, a rinsate sample collected on July 5, 2013 would be labeled Rinsate-1-07052013.
- Trip blank sample nomenclature will follow this convention: Designation – Sample Number – Date
  - The sample designation is "Blank".
  - Sample number is sequential in order of collection (i.e., 1 through n).
  - For example, a rinsate sample collected on July 5, 2013 would be labeled Blank-1-07052013.
- Duplicate sample nomenclature will follow this convention: Designation – Media Designation – Sample Number
  - The sample designation is "Dup".
  - Media designation for soil/solid is "S".
  - Media designation for water/liquid is "L".

- Sample number is sequential in order of collection (i.e., 1 through n).

3.6. Sample Preservation, Container and Hold Times

Samples for fixed laboratory analysis will be prepared, containerized, and preserved in the field in accordance with the guidelines described in Table C-4.

Samples will be kept on ice in coolers from the time of collection until delivery to the Laboratory. The samples will be preserved and hand delivered by the Field Staff, Field Coordinator, Technical Project Manager or courier to the laboratory. Alternatively, samples may be packaged and shipped to the laboratory. Samples will be kept at 0°to 6°C during delivery to the Laboratory and in refrigerated coolers while at the Laboratory until analyzed.

Holding times are defined as the time between sample collection and extraction, sample collection and analysis, or sample extraction and analysis. Some analytical methods specify a holding time for analysis only. For many methods, holding times may be extended by sample preservation techniques in the field. If a sample exceeds a holding time, then the results may be biased low. For example, if the extraction holding time for volatile analysis of soil sample is exceeded, then the possibility exists that some of the organic constituents may have volatilized from the sample or degraded. Results for that analysis would be qualified as estimated to indicate that the reported results may be lower than actual Site conditions. Holding times are presented in Table C-4.

3.7. Discrepancies

In the event that changes become necessary to the field work planned in the SSSP/QAPP, the Field Staff will discuss changes with the Field Coordinator and Technical Project Manager. If, for any reason, the schedules or procedures presented in the SSSP or contained in this document cannot be followed, the field staff shall complete a Sample Alteration Form (see Attachment C-1). Changes that may significantly change the experimental design will not be implemented until they are discussed between the Technical Project Manager and the Regulatory Project Manager.

Corrective action procedures that might be implemented from QA results or detection of unacceptable data will be developed if required and documented using the Corrective Action Form (see Attachment C-2).

3.8. Sample Handling and Custody

The Field Staff will be responsible for the care and custody of the samples until they are delivered or shipped to the Laboratory. Sample labels will be placed on all sample containers and will include the following information:

- Project Name or Number
- Sample identification number (nomenclature)
- Date and time

In addition to the above, COC records will be prepared and included in each cooler of samples delivered or shipped to the Laboratory. The COC procedures will be implemented in such a way as

to document sample possession from the time of sample collection until sample disposal by the Laboratory.

A sample will be considered in custody if it is:

- In the physical possession or view of the GeoEngineers staff or
- Sealed and placed in a secure location after having been in physical possession.

The COC record will contain the same information as is contained on the sample labels and serve as documentation of sample handling during delivery or shipment. One copy of this custody record will remain with the shipped samples, and one copy will be retained by the Field Staff who originally sampled and relinquished the samples. The sampler's copy will be maintained in the project file.

The samples relinquished to the Laboratory will be subject to transfer-of-custody and shipment procedures, as follows:

- The samples shipped to the Laboratory will be accompanied by a COC record documenting which samples are present in the cooler. When transferring possession of samples, the individuals relinquishing and receiving the samples will sign, date, and note the times of the sample transfer on the record. This custody record will document transfer of sample custody from the sampler to other persons, including the Laboratory.
- The samples will be properly packed for shipment and dispatched to the Laboratory for analysis, with a separate, signed COC enclosed in each sample cooler. If a GeoEngineers representative is not the person delivering the sample coolers to the Laboratory, sample shipping containers will be custody-sealed before being delivered to the Laboratory. The preferred procedure for custody sealing includes use of a custody signed seal placed across filament tape that is wrapped around the cooler at least twice. The custody seal should then be folded over and attached to itself in such a way as the package can only be accessed by cutting the filament tape or breaking the seal.
- Samples will be shipped and analyzed within the established hold times that are listed in Table C-4.

The Laboratory will utilize an established system for sample check-in, sample tracking, laboratory analyses assignment and performance, and sample check-out. The system will allow management review of the laboratory data before the issuance of laboratory reports. The management review will be accomplished on two levels: review of raw data for each analysis, and review of the final results to check for consistency or agreement of the results between parameters. Computers are routinely used for this purpose to take advantage of fast retrieval of information.

Upon receipt of samples accompanied by a COC form identifying the analytical parameters to be performed, the Laboratory Coordinator or a delegate will conduct the following:

- Log in the samples and assign Laboratory identification numbers. For each sample, a record will be generated containing the sample station number, sample description, analytical requirements, pricing information, and report format description.

- Enter these data into the Laboratory computer system.
- Prepare an analysis assignment sheet, noting the analytical parameters to be run and providing spaces for resulting analytical data.
- Assign the samples a position in the Laboratory workload backlog.
- Retain the COC form upon completion of data generation.

3.9. Analytical Methods

Laboratory analytical methods for the chemical analysis of soil and water samples collected during this investigation will include petroleum hydrocarbons, VOCs, SVOCs, PCBs as Aroclors, and metals. Samples and QC samples shall be analyzed following the analytical methods listed in Tables C-2 and C-3, using laboratory instruments prescribed in the methods. The analytical methods must meet the technical acceptance criteria specified by the method prior to the analysis of environmental samples. Samples that are not analyzed initially (i.e., placed on "hold") will be stored at the laboratory for up to 6 months, and will be disposed of by the laboratory following this period. Samples to be analyzed initially will be analyzed within proper holding times, which are listed in Table C-4.

The laboratory is required to comply with their current written standard operating procedures. Individuals responsible for corrective actions are listed in Section 2.1. All laboratory personnel will be responsible for reporting problems that may compromise the quality of the data to the laboratory project manager. A narrative describing the anomaly, the steps taken to identify and correct it, and the treatment of the relevant sample batch (i.e., recalculation, reanalysis, re-extraction) will be submitted with the data package.

EPA Method 5035 will be used for collection of soil samples to be analyzed for VOCs in the field. Disposable plungers will be used to collect the correct amount of soil for each sample.

3.10. Quality Control

Quality control activities that will be implemented for each sampling, analysis or measurement technique are summarized in Table C-5. Formulas for calculating QC statistics are provided in Section 2.4.2.

The Laboratory will maintain and implement documented QA/QC procedures. The laboratory QA/QC program will provide the following:

- Procedures that must be followed for certifying the precision and accuracy of the analytical data generated by the Laboratory.
- Documentation of each phase of sample handling, data acquisition, data transfer, report preparation, and report review.
- Accurate and secure storage and retrieval of samples and data.
- Detailed instructions for performing analyses and other activities affecting the quality of analytical data generated by the Laboratory.

- Appropriate management-level review and approval of procedures, revisions to procedures, and control of procedures in such a way so that laboratory personnel that require specific procedures have access to them.

A summary of MRLs and MDLs for the Target Analytes are listed in Tables C-2 and C-3.

3.10.1. Field Quality Control

Field QC samples serve as a control and check mechanism to monitor the consistency of sampling methods and the potential influence of off-Site factors on project samples. Examples of off-Site factors include airborne VOCs and contaminants that may be present in potable water used during drilling activities.

3.10.1.1. FIELD DUPLICATES

In addition to replicate analyses performed in the laboratory, field duplicates also serve as measures for precision. Field duplicates measure the precision and consistency of laboratory analytical procedures and methods, as well as the consistency of the sampling techniques used by field personnel. Under ideal field conditions, field duplicates, are created by thoroughly mixing a volume of the sample matrix, placing aliquots of the mixed sample in separate containers, and identifying one of the aliquots as the primary sample and the other as the duplicate sample. Duplicate samples for VOC analysis will not be homogenized and will be obtained as a discrete sample and placed in laboratory provided containers.

One field duplicate will be collected for every ten soil verification and pre-/post-use characterization samples. For groundwater, one field duplicate will be collected for every ten samples collected or a minimum of one per sampling event. Field duplicates will not be collected for soil stockpile, import material, or water treatment samples.

3.10.1.2. EQUIPMENT RINSATE BLANKS

Equipment rinsate blanks will be used to evaluate the effectiveness of decontamination procedures for preventing possible cross-contamination of project samples. Rinsate samples will be collected by slowly pouring distilled water over decontaminated sampling equipment and collecting the rinse water in appropriate sample containers for analysis.

A minimum of one equipment rinsate blank will be collected for every day of soil or groundwater sampling if reusable equipment are used for sampling. At least one equipment rinsate blank will be collected for every 10 samples collected.

3.10.1.3. TRIP BLANKS

Trip blanks consist of samples of reagent water that accompany samples to be analyzed for VOCs during sample storage in coolers and transport to the laboratory. They are used to assess potential contamination of samples during collection and transport due to the presence of VOCs in ambient air.

Trip blanks will be analyzed on a one per cooler basis containing samples for VOC analysis.

3.10.2. Laboratory Quality Control

Laboratory QC procedures will be evaluated through a formal data quality assessment process. The analytical laboratory will follow standard analytical method procedures that include specified QC monitoring requirements. These requirements will vary by method, but generally include:

- Method blanks
- Internal standards
- Instrument calibrations
- Matrix spike/matrix spike duplicates (MS/MSD)
- Laboratory control samples/laboratory control sample duplicates (LC S/LCSD)
- Laboratory replicates or duplicates
- Surrogate spikes

3.10.2.1.LABORATORY BLANKS

Laboratory procedures utilize several types of blanks, but the most commonly used blanks for QC monitoring are method blanks. Method blanks are laboratory QC samples that consist of either a soil-like material having undergone a contaminant destruction process, or reagent (contaminant-free) water. Method blanks are extracted and analyzed with each batch of environmental samples undergoing analysis. Method blanks are particularly useful during volatiles analysis since VOCs can be transported in the laboratory through the vapor phase. If a substance is detected in a method blank, then one (or more) of the following occurred:

- Sample containers, measurement equipment, and/or analytical instruments were not properly cleaned and contained contaminants.
- Reagents used in the process were contaminated with a substance(s) of interest.
- Volatile substances in ambient laboratory air with high solubility or affinities toward the sample matrix contaminated the samples during preparation or analysis.

It is difficult to determine which of the above scenarios took place if blank contamination occurs. However, it is assumed that the conditions that affected the blanks also likely affected the project samples. If target analytes are detected in method blanks, data validation guidelines assist in determining which substances in project samples are considered "real," and which ones are attributable to the analytical process. Furthermore, the guidelines state, ". . . there may be instances where little or no contamination was present in the associated blank, but qualification of the sample is deemed necessary. Contamination introduced through dilution water is one example" (EPA, 2008).

3.10.2.2.CALIBRATIONS

Several types of instrument calibrations are used, depending on the analytical method, to assess the linearity of the calibration curve and assure that the sample results reflect accurate and precise measurements. The main calibrations used are initial calibrations, daily calibrations, and continuing calibration verification.

3.10.2.3. MATRIX SPIKE/MATRIX SPIKE DUPLICATES (MS/MSD)

MS/MSD samples are used to assess influences or interferences caused by the physical or chemical properties of the sample itself. For example, extreme pH can affect the results for semi-volatile organic compounds. Or, the presence of a particular compound may interfere with accurate quantitation of another analyte. MS/MSD data is reviewed in combination with other QC monitoring data to determine matrix effects. In some cases, matrix effects cannot be determined due to dilution and/or high levels of related substances in the sample. A matrix spike is evaluated by spiking a project sample with a known amount of one or more of the target analytes, ideally at a concentration that is 5 to 10 times higher than the sample result. A percent recovery is then calculated by subtracting the un-spiked sample result from the spiked sample result, dividing by the known concentration of the spike, and multiplying by 100.

MS/MSD samples will be analyzed at a frequency of one MS/MSD per sample set or batch. The samples for the MS/MSD analyses should be collected from a boring or sampling location that is believed to have only low-level contamination. A sample from an area of low-level contamination is needed because the objective of MS/MSD analyses is to determine the presence of matrix interferences, which can best be achieved with low levels of contaminants. Additional sample volume will be collected for the MS/MSD analyses as required by the laboratory.

3.10.2.4. LABORATORY CONTROL SAMPLE/ LABORATORY CONTROL SAMPLE DUPLICATES (LCS/LCSD)

Also known as blank spikes, laboratory control samples (LCS) are similar to MS samples in that a known amount of one or more of the target analytes are spiked into a prepared sample medium, and a percent recovery of the spiked substances is calculated. The primary difference between LCS and MS samples is that the LCS uses a contaminant-free sample medium. For example, reagent water is typically used for LCS water analyses. The purpose of an LCS is to help assess the overall accuracy and precision of the analytical process including sample preparation, instrument performance, and analyst performance.

3.10.2.5. LABORATORY REPLICATES/DUPLICATES

Laboratories utilize MS/MSDs, LCS/LCSDs, and/or replicates to assess precision. Replicates are a second analysis of a field-collected environmental sample. Replicates can be split at varying stages of the sample preparation and analysis process; they most commonly consist of a second analysis on the extracted media.

3.10.2.6. SURROGATE SPIKES

Surrogate spikes are used to verify proper extraction procedures and the accuracy of the analytical instrument. Surrogates are substances with characteristics similar to the target analytes. A known concentration of surrogate is added to the project sample and passed through the instrument, and percent recovery is calculated. Each surrogate used has acceptance limits (i.e., an acceptable range) for percent recovery. If a surrogate recovery is low, sample results may be biased low and depending on the recovery value, a possibility of false negatives may exist. Conversely, when recoveries are above the specified acceptance limits, a possibility of false positives exist, although non-detect results are considered accurate.

3.11. Instrument/Equipment Testing, Inspection, and Maintenance

3.11.1. Field Instrumentation

Field instrumentation used during this project includes a water quality meter, air particulate meter, and PID. The field equipment is maintained as needed by an outside servicer qualified to maintain such devices consistent with manufacturer's specifications.

Field instrument calibration and calibration checks facilitate accurate and reliable field measurements. The calibration of the field equipment used on the project will be checked and adjusted as necessary in general accordance with the manufacturer's recommendations. Methods and intervals of calibration checks and instrument maintenance will be based on stability characteristics, required accuracy, intended use, and environmental conditions. The basic calibration check frequencies are described below.

The particulate meter used for air monitoring will be calibrated by a qualified serviceman on an annual basis. In the event the meter may not be working correctly, a separate meter will be shipped to the field team and the non-working meter will not be used.

The water quality meter used for surface water monitoring (i.e., pH, electric conductivity, and turbidity) will be calibrated on a weekly basis in accordance with the manufactures recommendations. Calibration check and calibration results will be recorded in the field notebook. In the event that the instrument does not calibrate properly, spare parts will be available for minor field maintenance. If the instrument cannot be made to work based on available equipment, a separate instrument will be shipped to the field team and the non-calibrating instrument will not be used.

The PID used for headspace vapor screening will be calibrated to 100 ppm isobutylene in general accordance with the manufacturer's recommendations. Calibration check and calibration results will be recorded in the field notebook. In the event that the instrument does not calibrate properly, spare parts will be available with the PID for minor field maintenance. If the instrument cannot be made to work based on available equipment, a separate instrument will be shipped to the field team and the non-calibrating instrument will not be used.

All equipment is visually inspected before use by the Field Staff to ensure it is clean and in good working condition. Inspection includes visual inspection of the outside of the equipment, and battery checks.

3.11.2. Laboratory Instrumentation

For chemical analytical testing, calibration procedures will be performed in general accordance with the analytical methods used and the laboratory's standard operating procedures (SOPs). Calibration documentation will be retained at the laboratory.

Instruments and equipment used during laboratory sample analysis will be operated, calibrated and maintained according to the manufacturer's guidelines and recommendations as well as criteria set forth in the applicable analytical methodology and/or in accordance with the laboratory's QA manual and SOPs.

3.12. Instrument/Equipment Calibration and Frequency

All laboratory instrument calibrations and their appropriate chemical standards are to comply with the specific methods within EPA SW-846, Test Methods for Evaluating Solid Waste, Physical and Chemical Methods, 3rd Edition, December 1996 and the Laboratory SOPs. Calibration documentation, initial (ICALs) and continuing (CCALs), will be retained at the Laboratory. Deficiencies to be resolved are the responsibility of the Laboratory Project Manager.

3.13. Inspection/Acceptance of Supplies and Consumables

The Field Coordinator is responsible for ensuring that field supplies and consumables are available on Site. Field equipment and consumables generally originate from the supply room, which is re-stocked by suppliers as necessary. Laboratory containers are supplied by the laboratory. The Field Coordinator will track, retrieve and inspect these materials.

Laboratory reagents will be of sufficient quality to minimize or eliminate laboratory blank background concentrations of the specific analytes to be measured. Reagents must also not contain other contaminants that may interfere with the analysis for the analytes of interest. All sample containers will be provided by the laboratory. All containers will be certified clean, verified with laboratory analysis. The Laboratory Project Manager is responsible for maintaining laboratory supplies.

3.14. Non-Direct Measurements

A substantial quantity of data has previously been collected at the Site. The previously collected data will be used in conjunction with the data collected during this removal action to delineate the nature and extent of contamination on the western portion of the Site. The previously collected data that will be used include observations present on investigation logs as well as chemical analytical data that have previously been reported in the draft and draft final EE/CA prepared for the Site (E&E, 2010). As the data has previously been utilized for Site characterization as presented in the EE/CA, it is considered of adequate quality for the purposes of this removal action.

3.15. Data Management

The data generated by the Laboratory will be managed in accordance with the procedures outlined in this QAPP and applicable Laboratory operating procedures. The Laboratory Project Manager is responsible for laboratory record-keeping, document control, and delivery of reliable and accurate data. Data management procedures are described below.

3.15.1. Data Collection

In addition to the sampling data recorded on the chain-of-custody forms, data describing the processing of samples will be accumulated in the Laboratory and recorded in Laboratory notebooks. Laboratory notebooks will contain the following information:

- Date of sample processing.
- Laboratory sample numbers.
- Analyses or operations performed for the samples.

- Calibration data applicable to the sample analysis.
- Quality control samples applicable to the sample analysis.
- Concentrations and required dilutions for the analysis.
- Instrument readings.
- Any special observations.
- The analyst's signature.

3.15.2. Data Reduction

Data reduction consists of calculating concentrations in samples from the raw data produced by the measuring instruments, and it will be performed by individual analysts assigned to the project. The complexity of the data reduction is dependent on specific analytical methods and the number of discrete operations (extractions, dilutions, and concentrations) involved in obtaining a sample concentration that can be measured.

For methods relying on a calibration curve, sample responses will be applied to the linear regression line to obtain an initial raw result that will be factored into method-specific equations to obtain an estimate of analyte concentrations in the original sample. Rounding will not be performed until after the final result is obtained to minimize rounding errors, and results will not normally be expressed in more than two (2) significant figures.

Upon completion of a set of analyses, calculations will be completed and checked by the analyst. The associated QC data derived from the analysis of method blanks, blank spikes, and duplicates will be entered onto QC charts and verified to be within control limits. If they are acceptable, the data will be entered into the laboratory computer system and data summaries (notebook pages, final concentrations) will be submitted to the Laboratory Project Manager for review. After approval, data are manually entered into a computer, using a Microsoft Excel® or equivalent format. If QC samples do not meet acceptance criteria, the Laboratory Project Manager will be notified and corrective actions will be taken, as appropriate. Acceptable data will be submitted to the Laboratory Project Manager for review. After the Laboratory Project Manager approval, the Data Management Coordinator will be notified that the data are ready to be reported, and the completed analyses can be removed from the laboratory backlog.

The Laboratory Project Manager will generate a hard copy data summary that will be reviewed and signed by the Laboratory Project Manager and the Laboratory Coordinator.

Copies of the raw data and the calculations used to generate the final results will be retained on file to allow reconstruction of the data reduction process at a later date, if necessary.

3.15.3. Data Review

System reviews will be performed at all levels. The individual analysts will review the quality of data through calibration checks, quality control sample results, and performance evaluation samples.

The final routine review is performed by the Laboratory Project Manager prior to reporting the results to the client. Non-routine audits are performed by regulatory agencies and client representatives. The level of detail and the areas of concern during these reviews will be dependent on the specific program requirements.

3.15.4. Data Reporting

Laboratory reports will contain final analytical results (uncorrected for blank contamination and out-of-control recoveries), identification of the analytical methods used, levels of detection, surrogate and matrix spike recovery data, and method blank data. In addition, special analytical problems and/or any modifications of the referenced methods will be noted. The number of significant figures reported will be consistent with the limits of uncertainty inherent in the analytical method.

Data are normally reported in units commonly used for the analyses performed. Concentrations in solids are expressed in terms of weight per unit weight, milligrams per kilogram or liter (ppm for inorganics) or micrograms per kilogram or liter (ppb for organics).

- mg/kg = ppm
- mg/L = ppm
- µg/kg = ppb
- µg/L = ppb

Illustrated unit conversions are as follows:

- 1 mg/kg = 1000 µg/kg
- 1 mg/L = 1000 µg/L
- 1 µg/kg = 0.001 mg/kg
- 1 µg/L = 0.001 mg/L

3.15.5. Electronic Deliverables

Upon completion of analyses, the Laboratory shall prepare electronic deliverables for all packages in accordance with the specifications in this QAPP. The Laboratory shall provide electronic deliverables no later than five business days after receipt of final analytical results. Final analytical results will be provided by the Laboratory within 10 days of the sample analysis.

The Electronic Data Deliverable (EDD) should follow the EQuIS Chemistry 4-file format. Specific details regarding data types, valid values, and field definitions are referenced in the Lab Specification. A template of the EQuIS 4-file format (provided upon request) includes a list of valid values and must be obtained in order to ensure the correct use of codes. The template spreadsheet contains four tabs, each with a format for importing various data into different parts of the EQuIS Chemistry data structure and four tabs containing valid values. Ultimately, the EDDs provided by the Laboratory must be delivered as text (.txt), comma-delimited (.csv), or Excel files.

Electronic files will be delivered via e-mail with a supporting hard copy to GeoEngineers. Electronic files will be reviewed by GeoEngineers to determine if the specifications in this section have been followed. If a file format or structure does not meet specifications, GeoEngineers may request a complete re-submittal. Upon reviewing the electronic file, GeoEngineers may also require a re-submittal based on inconsistencies (hereafter referred to as an "error") in code, spelling or missing information.

Each EDD package (a package being a sample delivery group [SDG]) may be delivered as separate files or as a single Excel workbook. Both methods require four file types: one type for samples, one for tests, one for results, and one for batches. If the separate file method is used, the following nomenclature must be followed in the file name - [SDG]_EFW2Lab[type].[extension] where:

- SDG = sample delivery group (i.e. lab package ID)
- Type = one of the following: SMP for sample data, TST for test data, RES for result data, BCH for batch data
- Extension = the file extension (e.g. .xls, .csv, .txt)

For example, for sample delivery group K1234 the files would be: K1234_EFW2LabSMP.xls, K1234_EFW2LabTST.xls, K1234_EFW2LabRES.xls, and K1234_EFW2LabBCH.xls.

The Laboratory will maintain on file all of the raw data, laboratory notebooks, and other documentation pertinent to the work on the project. This file will be maintained for a period of five years from the date of the project, unless a written request is received for an extended retention time.

3.15.6. Data Archival and Retrieval

The Laboratory will utilize an established system for data archival and retrieval. Computers are routinely used for this purpose to take advantage of fast retrieval of information. Data will be stored in-office and off site in a backup location. Hardware and software will be suitable to the secure archival and retrieval of information.

4.0 ASSESSMENT AND OVERSIGHT

4.1. Assessments and Response Actions

Quality assurance assessments will be conducted during the course of this project. The quality assurance assessment performed during this project may include the following:

- Review of Field Documentation and Laboratory Receipt Information
- Response Actions for Field Sampling
- Corrective Action for Laboratory Analyses

QA assessments will be conducted by the Quality Assurance Leader and/or Field Coordinator. Corrective action procedures that might be implemented from QA results or detection of

unacceptable data will be developed if required and documented using the Corrective Action Form (see Attachment C-2). If, for any reason, the schedules or procedures presented in the SSSP or above cannot be followed, the field staff shall complete a Sample Alteration Form (see Attachment C-1). The Sample Alteration Form will be reviewed by the Quality Assurance Leader and Technical Project Manager. Example Sample Plan Alteration and Corrective Action Forms are presented in Attachments C-1 and C-2, respectively.

4.1.1. Review of Field Documentation and Laboratory Receipt Information

Field sampling data documented in the daily field reports will be reviewed within five days by the Field Coordinator or Technical Project Manager for conformance with project QC requirements described in this QAPP. Minor corrective actions will be addressed by the Field Coordinator or Technical Project Manager. Major discrepancies will be reported to the Regulatory Project Manager by the Technical Project Manager, who has the authority to issue stop work orders. Major discrepancies will be documented in the final report, along with the reason for the discrepancies and any corrective actions. At a minimum, field documentation will be checked for the following:

- Sample collection information (date, time, location, matrices, etc.);
- Field instruments used and calibration data;
- Sample collection protocol;
- Sample containers, preservation, and volume;
- Field QC samples collected at the frequency specified;
- COC protocols; and
- Sample shipment information.

Sample receipt forms provided by the laboratory will be reviewed by the Technical Project Manager or Quality Assurance Leader for QC exceptions. The final laboratory data package will describe (in the case narrative) the effects that any identified QC exceptions have on data quality. The laboratory will review transcribed sample collection and receipt information for correctness prior to delivering the final data package.

4.1.2. Response Actions for Field Sampling

The Field Staff, or a designee, will be responsible for correcting equipment malfunctions or requesting new equipment throughout the field sampling effort and resolving situations in the field that may result in nonconformance or noncompliance with the QAPP. Corrective measures will be documented in the field notebook. Any deviations from the SSSP or QAPP will be documented on a Sample Plan Alteration Form (see Attachment C-1) which will provide a description of and rational for the deviation.

4.1.3. Corrective Action for Laboratory Analyses

The Laboratory is required to comply with their current written standard operating procedures. The Laboratory Project Manager will be responsible for ensuring that appropriate corrective actions are initiated as required for conformance with this QAPP. All laboratory personnel will be responsible for reporting problems that may compromise the quality of the data to the Laboratory Project

Manager. A narrative describing the anomaly, the steps taken to identify and correct it, and the treatment of the relevant sample batch (i.e., recalculation, reanalysis, re-extraction) will be submitted with the data package.

Corrective action procedures implemented from QA results or detection of unacceptable data will be documented using a Corrective Action Form (see Attachment C-2).

4.2. Reports to Management

The field work including construction monitoring, soil, water and air sampling for the removal action is expected to be performed over an estimated 16 week period. As discussed in section 3.4, field activities including construction, sampling, and monitoring activities, Site personnel and weather conditions, as well as decisions, corrective actions, and/or modifications to the project plans and procedures will be documented by the Field Staff on a daily basis throughout the removal action.

Progress reports summarizing field activities performed to date, major findings and anticipated future tasks will be prepared by The Technical Project Manager will provide status reports to the Regulatory Project Manager on a weekly basis as described in Section 11.1 of the Work Plan. In addition, analytical data will be transmitted to the Regulatory Project Manager within seven days following validation or as otherwise agreed with EPA.

5.0 DATA VALIDATION AND USABILITY

5.1. Data Review, Verification and Validation

The data validation and usability elements of the QAPP as detailed below address the QA/QC activities that occur after data collection and/or data generation is complete. Implementation of these elements ensures that the data conform to the specified criteria and will achieve the project objectives. Data validation will be performed in general accordance with the two EPA documents, USEPA Contract Laboratory Program National Functional Guidelines for *Organic* and *Inorganic* Data Review (EPA, 1999 and 2004).

The data are not considered final until validated. All data, including laboratory and field QC sample results, will be summarized in a data validation report. Specific acceptance criteria are discussed in Section 2.4.2. The data validation report will focus on data that did not meet the MQOs specified in Table C-1. The data validation report will also describe any deviations from this QAPP and actions taken to address those deviations.

Full laboratory data packages will be obtained for all soil samples analyzed. These data packages will include all formal Contract Laboratory Program (CLP) summary forms, and they will also include all instrument raw data from the chemical analyses. GeoEngineers will conduct an EPA Stage “2B” level validation on all data packages. In addition, GeoEngineers will conduct EPA Stage “4” level validation on ten percent (10%) of the data packages. These data will be reviewed for the following QC parameters:

- Holding times and sample preservation
- Method blanks

- MS/MSD analyses
- LCS/LCSD analyses
- Surrogate spikes
- Duplicates/replicates
- Field/Lab duplicates
- Calibrations (Initial and Continuing)
- Internal Standards
- Instrument Tunes

In addition to these QC parameters, other documentation such as sample receipt forms and case narratives will be reviewed to evaluate laboratory QA/QC.

5.2. Verification and Validation Methods

The Quality Assurance Leader will verify and validate data received from the laboratory. Any issues will be discussed with the Laboratory Project Manager and/or the Technical Project Manager, if needed. Issues will be resolved by these individuals. The final data validation report will document the results of any issue resolution process.

Hard-copy laboratory reports will provide the analysis-specific information including final sample analytical results, reportable field and laboratory QA/QC analytical results, MDLs and MRLs. The laboratory data will also be reported via electronic media using the tabular outputting capabilities of standard software formats.

The term “reporting limit” will be used interchangeably with “quantitation limit” to mean the lowest concentration at which an analyte can be quantified subject to the quality control criteria of the analytical method. These terms are different from “MDL,” which refers to the lowest concentration that the analytical method can ideally detect.

The Quality Assurance Leader will be responsible for overseeing data validation qualifiers including but not limited to “U,” “J,”, and “R” to explain final data quality issues that are affecting the laboratory data for the data user. The validation process will take any specific laboratory qualifiers, and any other laboratory quality control issues into consideration when applying and creating this final set of usable qualifiers, as described in the EPA document “Guidance for Labeling Externally Validated Laboratory Analytical Data for Superfund Use” (EPA, 2009). The qualifiers U, J and R are explained as follows:

- “U” indicates that a compound was analyzed for but not detected. The associated numerical value is the estimated sample quantitation limit, which is corrected for dilution and percent moisture.
- “J” indicates that a compound was detected below the reporting limit and the value is estimated or the value was estimated by the validator because of instrument bias reasons.

- If any target analytes are found in a laboratory method blank, it will be regarded as blank contamination. In these cases, the result of a given analyte in the method blank will be compared to any positive result of the same analyte in the associated field samples. If a field sample result is less than five times (ten times for common laboratory contaminants like acetone, phthalates, etc.) the result that is reported in the method blank, the result will be considered blank contamination. Accordingly, the result will be qualified as not-detected "U" at the elevated reporting limit.
- If there are two analyses reported by the laboratory for one sample (as in the case of dilutions), the validator will make a decision as to which analysis to use in the final assessment. As there should be only one reported result per analyte for a given sample, any extraneous results will be qualified as not-reportable "R" and will not be used.

5.3. Reconciliation With User Requirements

A data validation report will be produced by the project Quality Assurance Leader to identify cases where the projects MQOs were not met. The data validation report will include a discussion of the uncertainty and limitations of the data.

6.0 LIMITATIONS

We have prepared this Removal Action Work Plan for use by the Potlatch during the removal action at the Avery Landing Site. Within the limitations of scope, schedule and budget, our services have been executed in accordance with generally accepted environmental science practices in this area at the time this report was prepared. No warranty or other conditions express or implied should be understood.

Any electronic form, facsimile or hard copy of the original document (email, text, table, and/or figure), if provided, and any attachments are only a copy of the original document. The original document is stored by GeoEngineers, Inc. and will serve as the official document of record.

7.0 REFERENCES

Ecology and Environment (E&E). "Draft Final Engineering Evaluation/Cost Analysis, Avery Landing Site, Avery Idaho." Prepared for EPA by E&E, dated December 2010.

GeoEngineers, Inc., "Supplemental Site Investigation Report, Avery Landing Site, Avery, Idaho." Prepared for Potlatch Forest Holdings, Inc., GEI File No. 2315-016-01, dated November 9, 2011.

GeoEngineers, Inc., "Final Removal Action Work Plan, Avery Landing Site, Avery Idaho," GEI File No. 2315-016-02, prepared for U.S. Environmental Protection Agency on Behalf of Potlatch Land and Lumber, dated May 10, 2013.

Golder Associates, "Draft Engineering Evaluation/Cost Analysis Work Plan, Avery Landing Site, Avery Idaho." Prepared for Potlatch Land and Lumber, LLC by Golder Associates, dated January 23, 2009.

U.S. Environmental Protection Agency (USEPA). "USEPA Contract Laboratory Program National Functional Guidelines for Organic Data Review," EPA-540/R-99/008, Office of Emergency and Remedial Response. US Environmental Protection Agency, Washington, DC, dated October 2008.

U.S. Environmental Protection Agency (USEPA). "EPA Requirements for Quality Assurance Project Plans, EPA QA/R-5," EPA-240/B-01/003, Office of Emergency and Remedial Response. US Environmental Protection Agency, Washington, DC, dated March 2001.

U.S. Environmental Protection Agency (USEPA). "EPA Guidance for Quality Assurance Project Plans, EPA QA/G-5", EPA-240/R-02/009, Office of Emergency and Remedial Response. US Environmental Protection Agency, Washington, DC, dated December 2002.

U.S. Environmental Protection Agency (USEPA). "USEPA Contract Laboratory Program National Functional Guidelines for Inorganic Data Review," EPA 540-R-04-004, Office of Emergency and Remedial Response. US Environmental Protection Agency, Washington, DC, dated October 2010.

U.S. Environmental Protection Agency (USEPA). "Guidance for Labeling Externally Validated Laboratory Analytical Data for Superfund Use," EPA 540-R-08-005, Office of Solid Waste and Emergency Response. US Environmental Protection Agency, Washington, DC, dated January 2009.

Table C-1

Measurement Quality Objective

Avery Landing Site

Avery, Idaho

Laboratory Analysis	Reference Method[1]	Check Standard (LCS) R Limits[2,3] (%)		Matrix Spike (MS) R Limits[3] (%)		Surrogate Standards (SS) R Limits [2,3,4] (%)	MS Duplicate Samples or Lab Duplicate RPD Limits[5] (%)		Field Duplicate Samples RPD Limits[5] (%)	
		Soil	Water	Soil	Water	Soil/Water	Soil	Water	Soil	Water
Metals	EPA 6010/7060/7470/7471/7421/200.7/200.8	80-120	80-120	75-125	75-125	NA	≤20	≤20	≤50	≤35
Diesel- and Heavy oil-range Hydrocarbons	Ecology NWTPH-Dx with silica gel/acid wash cleanup	73-133	54-136	70-139	54-136	50-150	≤40	≤25	≤50	≤35
VOCs	EPA 8260	75-130	63-144	50-150	62-137	41-162	≤20	≤20	≤50	≤35
SVOCs	EPA 8270/SIM	59-120	40-125	30-140	50-150	27-140	≤20	≤30	≤50	≤35
PCBs	EPA 8082 Modified	44-180	21-140	5-145	50-150	46-210	≤40	≤35	≤50	≤35

Notes:

[1]Method numbers refer to EPA SW-846 Analytical Methods or Washington State Department of Ecology (Ecology) recommended analytical methods.

[2]Recovery ranges are estimates.

[3]Percent Recovery Limits are expressed as ranges based on laboratory control limits. Limits will vary for individual analytes.

[4]Individual surrogate recoveries are compound specific.

[5]RPD control limits are only applicable if the concentrations are greater than 5 times the method reporting limit (MRL). For results less than 5 times the MRL, the difference between the sample and duplicate must be less than 2X the MRL for soils and 1X the MRL for waters.

VOCs = Volatile organic compounds

SVOCs = Semi-volatile organic compounds

PCBs = Polychlorinated biphenyls

TCLP = Toxicity Caracteristic Leaching Procedure

LCS = Laboratory Control Sample

MS/MSD = Matrix Spike/Matrix Spike Duplicate

RPD = Relative Percent Difference

NA = Not Applicable

Table C-2

Reporting Limits and Screening Values for Soil Samples

Avery Landing Site
Avery, Idaho

Analyte	Method Detection Limit[1]	Method Reporting Limit[1]	Screening Value[2]
Metals (mg/kg)			
Arsenic	0.18	0.5	0.39
Barium	0.213	0.5	896
Cadmium	0.08	0.2	1.4
Chromium	0.4	0.5	2,135
Lead	0.6	1.5	50
Mercury	0.017	0.05	0.0051
Selenium	0.65	5	2.0
Silver	0.012	0.2	0.19
Petroleum Hydrocarbons (mg/kg)			
Diesel-range petroleum hydrocarbons	6.2	10	NE
Heavy-oil range petroleum hydrocarbons	9.9	25	NE
Volatile Organic Compounds (VOCs; μg/kg)			
1,2-Dichlorobenzene	0.4	1	5,250
1,3,5-Trimethylbenzene	0.4	5	145
1,4-Dichlorobenzene	0.4	1	75.5
2-Butanone	2.4	5	11,800
2-Hexanone	2.4	5	NE
4-Isopropyl Toluene	0.4	2	NE
Acetone	2.4	15	17,400
Benzene	0.3	1	17.8
Carbon Disulfide	0.3	1	5,970
Chlorobenzene	0.3	1	618
cis-1,2-Dichloroethene	0.3	1	193
Ethyl Benzene	0.3	1	10,200
Isopropyl Benzene	0.3	2	3,460
m,p-Xylene	0.6	2	1,670
Methylene Chloride	3.2	15	16.9
n-Butylbenzene	0.4	2	1200
n-Propyl Benzene	0.3	1	NE
o-Xylene	0.3	1	1,670
s-Butylbenzene	0.4	2	1,170
Styrene	0.4	2	1,830
t-Butylbenzene	0.4	2	852
Toluene	0.3	2	4,890
Trichloroethene	0.3	1	2.88
Carcinogenic Polycyclic Aromatic Hydrocarbons (cPAHs; μg/kg)			
Benzo(a)anthracene	1	10	422
Benzo(a)pyrene	1	10	42.2
Benzo(b)fluoranthene	2	10	420
Benzo(k)fluoranthene	1	10	4,200
Chrysene	1	10	33,400

Analyte	Method Detection Limit[1]	Method Reporting Limit[1]	Screening Value[2]
Dibenzo(a,h)anthracene	2	5	5
Indeno(1,2,3-cd)pyrene	3	10	422
Non-Carcinogenic Polycyclic Aromatic Hydrocarbons (PAHs; µg/kg)			
1-methylnaphthalene	1	10	22,000
2-Methylnaphthalene	1	10	3,310
Acenaphthene	1	10	52,300
Acenaphthylene	1	10	78,000
Anthracene	1	10	1,040,000
Benzo(g,h,i)perylene	3	10	1,180,000
Fluoranthene	1	10	364,000
Fluorene	1	10	54,800
Naphthalene	2	10	1,140
Phenanthrene	1	10	79,000
Pyrene	1	10	359,000
Semi-Volatile Organic Compounds (µg/kg)			
2-Chloronaphthalene	5	20	128,000
2-Methylphenol	15	100	1,800
4-Methylphenol	15	200	141
4-Nitroaniline	20	100	2.99
Bis(2-Chloroethoxy)methane	5	100	NE
bis(2-Ethylhexyl)phthalate	50	600	11,800
Butylbenzylphthalate	50	200	511,000
Carbazole	5	100	NE
Dibenzofuran	5	100	6,100
Diethylphthalate	15	200	27,500
Di-n-butylphthalate	50	500	31,000
Di-n-octylphthalate	5	500	183,000
Phenol	15	100	7,360
Polychlorinated Biphenyls (µg/kg)			
Aroclor 1016	4.92	50	See Total PCBs
Aroclor 1221	4.92	50	See Total PCBs
Aroclor 1242	4.92	50	See Total PCBs
Aroclor 1248	4.92	50	See Total PCBs
Aroclor 1254	4.92	50	See Total PCBs
Aroclor 1260	4.12	50	See Total PCBs
Total PCBs (sum of Aroclors)	NA	NA	150

Notes:

[1]Values from Test America of Spokane, Washington.

[2]Values referenced from December 2010 Draft Final Engineering Evaluation/Cost Estimate (E&E, 2010).

[3]A mixture of Aroclors 1016 and 1260 (1660) contains PCB congeners that cover the full chromatographic range of the Aroclors 1016, 1221, 1232, 1242, 1248, 1254 and 1260. EPA Method 8082A describes the use of 1660 to determine the linearity and sensitivity for the full range of Aroclors. When Aroclors other than 1016 or 1260 are identified they are quantified using a single point calibration based on the linearity and sensitivity determined using 1660. Following this reasoning, ARI normally performs limit of detection (LOD) studies only for Aroclors 1016 and 1260.

NE = Not established

NA = Not available

mg/kg = milligram per kilogram

µg/kg = microgram per kilogram

Shading indicates the method reporting limit is greater than the screening value

Table C-3

Reporting Limits and Screening Values for Water Samples

Avery Landing Site
Avery, Idaho

Analyte	Method Detection Limit[1]	Method Reporting Limit[1]	Screening Value[2]
Metals (µg/L)			
Arsenic	0.75	1	10
Cadmium	0.028	0.4	0.6
Copper	0.11	1	11
Lead	0.034	0.4	2.5
Mercury	0.18	0.2	0.012
Thallium	0.28	1	0.24
Zinc	0.88	1.4	120
Petroleum Hydrocarbons (mg/L)			
Diesel-range petroleum hydrocarbons	0.2	0.25	5
Heavy-oil range petroleum hydrocarbons	0.3	0.4	5
Carcinogenic Polycyclic Aromatic Hydrocarbons (cPAHs; µg/L)			
Benzo(a)anthracene	0.006	0.02	0.0038
Benzo(a)pyrene	0.006	0.02	0.0038
Benzofluoranthenes (total)	0.006	0.02	0.0038
Chrysene	0.006	0.02	0.0038
Semi-Volatile Organic Compounds (µg/L)			
bis(2-Ethylhexyl)phthalate	1.18	3	1.2
n-Nitrosodiphenylamine	0.2	2	3.3
Polychlorinated Biphenyls (µg/L)			
Aroclor 1016	0.053	0.1	See Total PCBs
Aroclor 1221	0.053	0.1	See Total PCBs
Aroclor 1242	0.053	0.1	See Total PCBs
Aroclor 1248	0.053	0.1	See Total PCBs
Aroclor 1254	0.053	0.1	See Total PCBs
Aroclor 1260	0.014	0.1	See Total PCBs
Total PCBs (sum of Aroclors)	NA	NA	0.000064

Notes:

[1] Values from Test America of Spokane, Washington.

[2] Idaho surface water quality criteria referenced from Idaho Administrative Code 58.01.02.

[3] A mixture of Aroclors 1016 and 1260 (1660) contains PCB congeners that cover the full chromatographic range of the Aroclors 1016, 1221, 1232, 1242, 1248, 1254 and 1260. EPA Method 8082A describes the use of 1660 to determine the linearity and sensitivity for the full range of Aroclors. When Aroclors other than 1016 or 1260 are identified they are quantified using a single point calibration based on the linearity and sensitivity determined using 1660. Following this reasoning, based on the linearity and sensitivity determined using 1660. Following this reasoning, ARI normally performs limit of detection (LOD) studies only for Aroclors 1016 and 1260.

NE = Not established

NA = Not available

mg/L = milligram per liter

µg/L = microgram per liter

Shading indicates the method reporting limit is greater than the screening value

Table C-4

Test Methods, Sample Containers, Preservation and Holding Times

Avery Landing Site

Avery, Idaho

Analysis	Method	Soil Sample				Water Sample			
		Minimum Sample Size	Sample Containers	Sample Preservation	Holding Times[1]	Minimum Sample Size	Sample Containers	Sample Preservation	Holding Times[1]
Metals	EPA 6010/7060/7470/7471/7421/200.7/200.8	100 g	4 or 8 oz glass wide mouth with Teflon-lined lid	Cool 4°C	180 days (28 days for Mercury)	500 mL	1 L poly bottle	HNO_3 - pH<2 (Dissolved metals preserved after filtration)	180 days (28 days for Mercury)
Diesel- and Oil-Range Hydrocarbons	Ecology NWTPH-Dx with acid/silica gel cleanup	100 g	8 or 16 oz amber glass wide-mouth with Teflon-lined lid	Cool 4°C	14 days to extraction 40 days from extraction to analysis	1 L	1 liter amber glass with Teflon-lined lid	Cool 4°C, HCl to pH < 2	14 days to extraction 40 days from extraction to analysis
VOCs	EPA 8260	10 g	Three 40mL glass vial (VOA)	Cool 4°C	14 days to extraction/ analysis	40mL	Three 40mL glass vial (VOA)	Cool 4°C, HCl to pH < 2	14 days to extraction/ analysis
SVOCs	EPA 8270/SIM	100 g	4 or 8 oz glass wide mouth with Teflon-lined lid	Cool 4°C	14 days to extraction, 40 days from extraction to analysis	1 L	1 liter amber glass with Teflon-lined lid	Cool 4°C	7 days to extraction, 40 days from extraction to analysis
PCBs	EPA 8082	100 g	4 or 8 oz glass wide mouth with Teflon-lined lid	Cool 4°C	14 days to extraction, 40 days from extraction to analysis	1 L	1 liter amber glass with Teflon-lined lid	Cool 4°C	7 days to extraction, 40 days from extraction to analysis

Notes:

[1] Holding Times are based on elapsed time from date of collection.

VOCs = Volatile organic compounds

SVOCs = Semi-volatile organic compounds

PCBs = Polychlorinated biphenyls

oz = ounce

mL = milliliter

L = liter

g = gram

Table C-5

Quality Control Samples - Type and Frequency

Avery Landing Site

Avery, Idaho

Parameter	Field QC			Laboratory QC			
	Field Duplicates[1]	Trip Blanks	Rinsate[2]	Method Blanks	LCS	MS / MSD	Lab Duplicates
Diesel- and Oil-Range Hydrocarbons with silica gel/acid wash cleanup	1/10 soil/water samples	NA	1/10 soil/water samples	1/batch	1/batch	NA	1/batch
VOCs	1/10 soil/water samples	1/cooler	1/10 soil/water samples	1/batch	1/batch	1 set/batch	NA
SVOCs	1/10 soil/water samples	NA	1/10 soil/water samples	1/batch	1/batch	1 set/batch	NA
PCBs	1/10 soil/water samples	NA	1/10 soil/water samples	1/batch	1/batch	1 set/batch	NA
Metals	1/10 soil/water samples	NA	1/10 soil/water samples	1/batch	1/batch	1 MS/batch	1/batch

Notes:

[1]Field duplicate samples will be obtained for final excavation limit verification and groundwater samples only.

[2]A minimum of one equipment rinsate blank will be collected for every day of soil or groundwater sampling if reusable equipment are used for sampling.

LCS = Laboratory control sample

MS = Matrix spike sample

MSD = Matrix spike duplicate sample

VOCs = Volatile organic

SVOCs = Semi-volatile organic compounds

PCBs = polychlorinated biphenyls

An analytical lot or batch is defined as a group of samples taken through a preparation procedure and sharing a method blank, LCS, and MS/ MSD (or MS and lab duplicate). No more than 20 field samples can be contained in one batch.

ATTACHMENT C-1
Sample Plan Alteration Form

GeoEngineers

SAMPLE PLAN ALTERATION FORM

Avery Landing Removal Action
File No. 2315-016-02

Material to be Sampled: _____

Measurement Parameter(s): _____

_____

_____

Standard Procedure for Field Collection & Laboratory Analysis (cite reference): _____

_____

_____

_____

Reason for Change in Field Procedure or Analysis Variation: _____

_____

_____

_____

Variation from Field or Analytical Procedure: _____

_____

_____

_____

Special Equipment, Materials or Personnel Required: _____

_____

_____

_____

Initiators Name: _____ Date: _____

Project Officer: _____ Date: _____

QA Leader: _____ Date: _____

ATTACHMENT C-2
Corrective Action Form

GeoEngineers

CORRECTIVE ACTION FORM

Avery Landing Removal Action
File No. 2315-016-02

Sample Delivery Group(s) Involved: _____

Sample ID(s) Involved: _____

_____

Measurement Parameter(s): _____

_____

_____

Acceptable Data Range: _____

_____

_____

_____

Problem Area(s) Requiring Corrective Action: _____

_____

_____

_____

Measures Required to Correct the Problem: _____

_____

_____

_____

Means of Detecting Problems and Verifying Correction: _____

_____

_____

Initiators Name: _____ Date: _____

Project Officer: _____ Date: _____

QA Leader: _____ Date: _____

APPENDIX D
Integrated Health and Safety Plan

Integrated Health and Safety Plan

Avery Landing Site
Avery, Idaho

for
U.S. Environmental Protection Agency on Behalf of Potlatch Land and Lumber, LLC

May 13, 2013

Table of Contents

1.0 INTRODUCTION 1

2.0 BACKGROUND INFORMATION 2

2.1. Site Location 2
2.2. Site History 2

3.0 DESCRIPTION OF WORK TO BE PERFORMED 2

4.0 POTENTIAL SITE HAZARDS 2

4.1. Physical Hazards 3
4.2. Biological Hazards 3
4.3. Chemical Hazards 3
4.4. Site Personnel Contact Information 6

5.0 LIMITATIONS 7

ATTACHMENTS

Attachment D-1. Potlatch Health and Safety Plan
Attachment D-2. GeoEngineers Health and Safety Plan
Attachment D-3. Pacific Pile and Marine Health and Safety Plan

1.0 INTRODUCTION

This Integrated Health and Safety Plan (HASP) is to be used in conjunction with the company-specific Health and Safety Plans contained in Attachment D.1, D.2 and D.3 for the Avery Landing Site (Site) removal action. Together, the written safety programs and this HASP constitute the health and safety plan for this Site.

In accordance with the recommended removal action alternative presented in the EE/CA dated December 2010 (E&E, 2010) and as set forth and described in the Action Memorandum for the Avery Landing Site (EPA, 2011), and agreements as otherwise required by with United States Environmental Protection Agency (EPA), Potlatch Land and Lumber, LLC. (Potlatch) will perform removal actions at the Avery Landing Site (Site) followed by Site-wide post removal action groundwater monitoring. During implementation of the removal action, all Site personnel are required to comply with the items specified under Occupational Safety and Health Administration (OSHA) Title 29 of the Code of Federal Regulations (CFR), Part 1910.120 (b), "Final Rule." and 29 CFR 1910.1001.

To comply with OSHA and Federal regulations, company-specific HASPs have been prepared by Potlatch and their contractors, GeoEngineers, Inc. (GeoEngineers; Environmental Engineer) and Pacific Pile and Marine (PPM; Cleanup Contractor), to identify potential Site hazards and emergency response procedures for the removal action. At a minimum, the attached company-specific Health and Safety Plans address the potential site-specific hazards presented in this document.

During the removal action, Potlatch, GeoEngineers, and PPM will operate under their respective company HASP (see Attachments D. through D.3). In addition, all Site visitors will be required to check in at the construction trailer. While on Site, all visitors will be expected to comply with relevant OSHA and federal requirements and will be expected to provide their own personal protective equipment (PPE) as appropriate. Visitors who have not met OSHA and federal requirements for training, medical surveillance, and PPE will not be permitted to enter areas where exposure to hazardous materials is possible. Furthermore, subcontractors will also be required to follow and adhere to relevant OSHA and federal requirements. Subcontractors must supply their own PPE, training, medical monitoring, and any other items necessary for compliance with OSHA and other pertinent regulations.

Site personnel will be encouraged to report any conditions or practices that they consider detrimental to their health or safety or that they believe violate applicable health and safety standards. Personnel who believe that an imminent danger threatens human health or the environment are obligated to remove themselves from the area or the hazardous condition and warn all other personnel of the source of the danger. The hazardous condition or matter will be brought to the immediate attention of the other Site personnel for resolution. All Site personnel shall participate in daily tailgate safety meeting to be conducted prior to the start of work.

2.0 BACKGROUND INFORMATION

2.1. Site Location

The Site is located in the St. Joe River Valley of the Bitterroot Mountains in northern Idaho, approximately one mile west of the town of Avery in Shoshone County. The St. Joe River borders the Site to the south and Highway 50 borders the Site to the north.

- The Site is located in the NW quarter of Section 16, Township 45 North, Range 5 East, Willamette Meridian.
- Latitude 47° 13' 57" North and Longitude W 115° 43' 40" West.

2.2. Site History

Detailed information regarding Site and operational history, previous investigations and regulatory history and cleanup actions are presented in EPA's EE/CA (E&E, 2010) and/or Supplemental Investigation Report (GeoEngineers, 2011) and are summarized in the Avery Landing Removal Action Work Plan (Work Plan; GeoEngineers, 2013).

3.0 DESCRIPTION OF WORK TO BE PERFORMED

In general, EPA's selected removal action requires the excavation of contaminated soil. Residual contamination remaining at the Site is expected to attenuate by way of natural processes and the progress of the attenuation will be monitored over-time, following the completion of the removal action.

The objectives of the removal action are to:

- Remove the remaining components of the product containment, collection, and extraction systems that were installed as part of the 1994 and 2000 removal actions;
- Remove soil exceeding field screening methods within the upland and river bank areas;
- Remove, treat, and/or manage petroleum product that is present as light Non-Aqueous Phase Liquids (LNAPL) on groundwater within the excavations;
- Dispose of waste streams in accordance with CERCLA's off-site rule requirements; and
- Restore portions of the Site affected by the removal action including river bank reconstruction, backfilling, compaction, grading and re-vegetation.

The conceptual design and preliminary approach for the removal action that will be performed by Potlatch is summarized in the Avery Landing Removal Action Work Plan (Work Plan; GeoEngineers, 2013).

4.0 POTENTIAL SITE HAZARDS

- Identification and evaluation of on-site safety and health hazards;

- A safety and health risk (hazard) analysis for each site task and operation that is identified in the comprehensive work plan.

This section presents hazards that may be potentially present at the Site.

4.1. Physical Hazards

- Drill rigs (Monitoring Well Installation)
- Backhoe
- Trackhoe
- Off-Road dump truck
- Front End Loader
- Excavations/trenching (1:1 slopes for Type B soil)
- Shored/braced excavation if greater than 4 feet of depth
- Overhead hazards/power lines
- Tripping/puncture hazards (debris on-site, steep slopes or pits)
- Unusual traffic hazard – Street traffic
- Heat/Cold, Humidity
- Utilities/utility locate

4.2. Biological Hazards

- Rodents and Wildlife.
- Poisonous Snakes
- Insects, Bees and Spiders

4.3. Chemical Hazards

The following are the chemical hazards identified as present or potentially present at the Site.

Compound/ Description	Exposure Limits/IDLH	Exposure Routes	Symptoms/Health Effects
Diesel Fuel — liquid with a characteristic odor	None established by OSHA, but ACGIH has adopted 100 mg/m^3 for a TWA (as total hydrocarbons)	Ingestion, inhalation, skin absorption, skin and eye contact	Irritated eyes, skin, and mucous membrane; fatigue; blurred vision; dizziness; slurred speech; confusion; convulsions; headache; dermatitis
Polycyclic aromatic hydrocarbons (PAH) as coal tar pitch volatiles	PEL 0.2 mg/m^3 TLV 0.2 mg/m^3 REL 0.1 mg/m^3 IDLH 80 mg/m^3	Inhalation, ingestion, skin and/or eye contact	Dermatitis, bronchitis, potential carcinogen

Compound/ Description	Exposure Limits/IDLH	Exposure Routes	Symptoms/Health Effects
PCBs (as Aroclor 1254)—colorless to pale-yellow viscous liquid with a mild, hydrocarbon odor	PEL 0.5 mg/m^3 TLV 0.5 mg/m^3 REL 0.001 mg/m^3 IDLH 5.0 mg/m^3	Inhalation (dusts or mists), skin absorption, ingestion, skin and/or eye contact	Irritated eyes, chloracne, liver damage, reproductive effects, potential carcinogen
Benzene	OSHA PEL 1 ppm Short term: 5 ppm ACGIH PEL 0.5 ppm	Inhalation, skin absorption, ingestion, skin and/or eye contact	Irritated eyes, skin, nose, respiratory system; dizziness; headache, nausea, staggered gait; anorexia, lassitude (weakness, exhaustion); dermatitis; bone marrow depression; [potential occupational carcinogen]
Xylene (m, p, o)	OSHA PEL 100 ppm NIOSH REL 100 ppm Short term: 150 ppm	Inhalation, skin absorption, ingestion, skin and/or eye contact	Irritation eyes, skin, nose, throat; dizziness, excitement, drowsiness, incoordination, staggering gait; corneal vacuolization; anorexia, nausea, vomiting, abdominal pain; dermatitis
Trimethylbenzene (1,2,4 and 1,3,5)	NIOSH REL 25 ppm	Inhalation, skin absorption, ingestion, skin and/or eye contact	Irritation eyes, skin, nose, throat, respiratory system; bronchitis; hypochromic anemia; headache, drowsiness, lassitude (weakness, exhaustion), dizziness, nausea, incoordination; vomiting, confusion; chemical pneumonitis (aspiration liquid)
Trichloroethene	OSHA PEL 100 ppm	Inhalation, skin absorption, ingestion, skin and/or eye contact	Irritation eyes, skin; headache, visual disturbance, lassitude (weakness, exhaustion), dizziness, tremor, drowsiness, nausea, vomiting; dermatitis; cardiac arrhythmias, paresthesia; liver injury; [potential occupational carcinogen]
p-Nitroaniline	OSHA PEL 1 ppm NIOSH REL 3 mg/m^3	Inhalation, skin absorption, ingestion, skin	irritation nose, throat; cyanosis, ataxia; tachycardia, tachypnea; dyspnea (breathing difficulty); irritability; vomiting, diarrhea; convulsions; resp arrest; anemia; methemoglobinemia; jaundice
Dinitro-o-cresol	OSHA PEL 0.2 mg/m^3 NIOSH REL 0.2 mg/m^3	Inhalation, skin absorption, ingestion, skin	Sense of well-being; headache, fever, lassitude (weakness, exhaustion), profuse sweating, excess thirst, tachycardia, hyperpnea, cough, short breath, coma

Compound/ Description	Exposure Limits/IDLH	Exposure Routes	Symptoms/Health Effects
Antimony	NIOSH REL: TWA 0.5 mg/m^3 OSHA PEL: TWA 0.5 mg/m^3	Inhalation, skin absorption, ingestion, skin and/or eye contact	Irritation eyes, skin, nose, throat, mouth; cough; dizziness; headache; nausea, vomiting, diarrhea; stomach cramps; insomnia; anorexia; unable to smell properly
Arsenic	NIOSH REL: 0.002 mg/m^3 (15-minute) OSHA PEL: TWA 0.010 mg/m^3	Inhalation, skin absorption, ingestion, skin and/or eye contact	Ulceration of nasal septum, dermatitis, gastrointestinal disturbances, peripheral neuropathy, resp irritation, hyperpigmentation of skin, [potential occupational carcinogen]
Barium Chloride (as Ba)	NIOSH REL: TWA 0.5 mg/m^3 OSHA PEL: TWA 0.5 mg/m^3 Also applies to other soluble barium compounds (as Ba) except Barium sulfate.	Inhalation, ingestion, skin and/or eye contact	Irritation eyes, skin, upper respiratory system; skin burns; gastroenteritis; muscle spasm; slow pulse, extrasystoles; hypokalemia
Beryllium & beryllium compounds (as Be)	NIOSH REL: 0.0005 mg/m^3 OSHA PEL: TWA 0.002 mg/m^3 C 0.005 mg/m^3 (30 minutes), with a maximum peak of 0.025 mg/m^3	Inhalation, skin and/or eye contact	Berylliosis (chronic exposure): anorexia, weight loss, lassitude (weakness, exhaustion), chest pain, cough, clubbing of fingers, cyanosis, pulmonary insufficiency; irritation eyes; dermatitis; [potential occupational carcinogen]
Cobalt metal dust and fume (as Co)	NIOSH REL: TWA 0.05 mg/m^3 OSHA PEL: TWA 0.1 mg/m^3	Inhalation, ingestion, skin and/or eye contact	Cough, dyspnea (breathing difficulty), wheezing, decreased pulmonary function; weight loss; dermatitis; diffuse nodular fibrosis; resp hypersensitivity, asthma
Iron oxide dust and fume (as fe)	NIOSH REL: TWA 5 mg/m^3 OSHA PEL: TWA 10 mg/m^3	Inhalation	Benign pneumoconiosis with X-ray shadows indistinguishable from fibrotic pneumoconiosis (siderosis)
Lead	NIOSH REL: TWA (8-hour) 0.050 mg/m^3 OSHA PEL: TWA 0.050 mg/m^3	Inhalation, ingestion, skin and/or eye contact	lassitude (weakness, exhaustion), insomnia; facial pallor; anorexia, weight loss, malnutrition; constipation, abdominal pain, colic; anemia; gingival lead line; tremor; paralysis wrist, ankles; encephalopathy; kidney disease; irritation eyes; hypertension

Compound/ Description	Exposure Limits/IDLH	Exposure Routes	Symptoms/Health Effects
Manganese Compounds	NIOSH REL: TWA 1 mg/m^3 ST 3 mg/m^3 OSHA PEL: 5 mg/m^3	Inhalation, ingestion	Manganism; asthenia, insomnia, mental confusion; metal fume fever: dry throat, cough, chest tightness, dyspnea (breathing difficulty), rales, flu-like fever; low-back pain; vomiting; malaise (vague feeling of discomfort); lassitude (weakness, exhaustion); kidney damage
Mercury Compounds	NIOSH REL: Hg Vapor: TWA 0.05 mg/m^3 Other: C 0.1 mg/m^3 [skin] OSHA PEL: TWA 0.1 mg/m^3	Inhalation, skin absorption, ingestion, skin and/or eye contact	Irritation eyes, skin; cough, chest pain, dyspnea (breathing difficulty), bronchitis, pneumonitis; tremor, insomnia, irritability, indecision, headache, lassitude (weakness, exhaustion); stomatitis, salivation; gastrointestinal disturbance, anorexia, weight loss; proteinuria

Notes:

IDLH = immediately dangerous to life or health
OSHA = Occupational Safety and Health Administration
ACGIH = American Conference of Governmental Industrial Hygienists
mg/m3 = milligrams per cubic meter
TWA = time-weighted average (Over 8 hrs.)
PEL = permissible exposure limit
TLV = threshold limit value (over 10 hrs)
STEL = short-term exposure limit (15 min)
ppm = parts per million

4.4. Site Personnel Contact Information

Contact information for Site personnel are presented in the following table:

Contact Name	Organization/Role	Telephone Numbers
Earl Liverman	EPA On-Scene Coordinator	Office: 208.664.4858
Terrance Cundy	Potlatch Project Manger	Office: 208.883.1668 Cell: 208.301.0410
Brandon Miller	Potlatch St Joe District Forester	Office: 208.245.6436 Cell: 208.874.7588
Wilbur Clark	Pacific Pile & Marine, L.P. Project Manager	Office: 206-331-3873 Cell: 206-300-1312
Craig Cearley	Pacific Pile & Marine, L.P. Superintendent	Cell: 206-909-1798
John Herzog	GeoEngineers Technical Project Manager	Office: 206-239-3252 Cell: 206-406-6431

Contact Name	Organization/Role	Telephone Numbers
Robert Trahan	GeoEngineers Field Coordinator	Office: 206-239-3253 Cell: 206-240-2300
Abhijit Joshi	GeoEngineers Site Engineer	Office: 206-239-3256 Cell: 425-223-9028
Paul Robinette	GeoEngineers Site Engineer	Office: 253-383-4940 Cell: 253-278-0273

5.0 LIMITATIONS

This previous sections of this HASP provide only a general overview of the Site background, planned activities, and hazards for informational purposes. All Site workers must operate under their individual company-specific Health and Safety plan.

6.0 REFERENCES

E & E (Ecology and Environment, Inc.), "Draft Final Engineering Evaluation /Cost Analysis, Avery Landing Site, Avery, Idaho," prepared for the United States Environmental Protection Agency, Region 10, dated December 2010.

GeoEngineers, Inc., "Draft Removal Action Work Plan, Avery Landing Site, Avery, Idaho" GEI File No. 2315-016-02, prepared for United States Environmental Protection Agency on Behalf of the Potlatch Corporation, dated April 12, 2013.

GeoEngineers, Inc., "Supplemental Site Investigation, Avery Landing Site, Avery, Idaho," GEI File No. 2315-016-01, prepared for Potlatch Forest Holdings, Inc., dated November 9, 2011.

United States Environmental Protection Agency (EPA), "Action Memorandum for the Avery Landing Site Located Near Avery, Shoshone County, Idaho," memorandum to Daniel Opalski, Office of Environmental Cleanup, dated July 5, 2011.

ATTACHMENT D-1
Potlatch Health and Safety Plan

Site Health and Safety Plan

Avery Landing Site
Avery, Idaho

for
U.S. Environmental Protection Agency

May 13, 2013

Potlatch Land and Lumber, LLC
530 S. Asbury, Suite 4
Moscow, Idaho
208.883.1668

Site Health and Safety Plan

Avery Landing Site
Avery, Idaho

May 13, 2013

Approvals:

Signature: Date:

Terrance W. Cundy, Manager – Silviculture, Wildlife and Environment, Potlatch

Table of Contents

1.0 INTRODUCTION 1

1.1. General Project Information 1

2.0 BACKGROUND INFORMATION 1

2.1. Site Location 1
2.2. Site History 1

3.0 WORK PLAN 2

3.1. Field Activities 2
3.2. Field Personnel and Training 2

4.0 EMERGENCY INFORMATION 2

4.1. Evacuation and Contact Information 2
4.1.1. Primary Medical Facility 2
4.1.2. Alternate Medical Facility 3
4.2. Emergency Contact Information 4
4.3. Standard Emergency Procedures 5

5.0 HAZARD ANALYSIS 6

5.1. Physical Hazards 6
5.1.1. Safe Work Practices 6
5.2. Chemcial Hazards 7
5.2.1. Polycyclic Aromatic Hydrocarbons (PAHs) and Carcinogenic Polycyclic Aromatic Hydrocarbons (cPAHs) 10
5.2.2. Polychlorinated Biphenyl Compounds (PCBs) 10
5.2.3. Safe Work Practices 10
5.3. Biological Hazards 11
5.3.1. Safe Work Practices 11
5.4. Hazard Reporting/Documentation 11

6.0 AIR MONITORING PLAN 11

7.0 SITE CONTROL PLAN 11

7.1. Traffic or Vehicle Access Control Plan 11
7.2. Site Work Zones 11
7.3. Buddy System 11
7.4. Site Communication Plan 12

8.0 PERSONAL PROTECTIVE EQUIPMENT 13

9.0 MISCELLANEOUS 14

9.1. Personnel Medical Surveillance 14
9.2. Spill Containment Plan (Drum and Container Handling) 14
9.3. Sanitation 14
9.4. Lighting 14

10.0 LIMITATIONS 14

11.0 REFERENCES 14

1.0 INTRODUCTION

This HASP is to be used in conjunction with the Potlatch Environmental Management System (EMS). Together, the EMS and this HASP constitute the site safety plan for the Avery Landing Site (Site) removal action. This plan is to be used by Potlatch personnel on this Site and must be available on-Site.

If requested by contractors, this HASP may be provided for informational purposes only. Please be advised that this HASP is intended for use by Potlatch Employees only. Nothing herein shall be construed as granting rights to Potlatch contractors or subcontractors, or any other personnel working on this Site, to use or legally rely on this HASP. Potlatch specifically disclaims any responsibility for the health and safety of any person who is not a Potlatch employee.

1.1. General Project Information

Project Name:	Avery Landing Removal Action
Type of Project:	Construction Observation
Start/Completion:	Spring 2013/Fall 2013
Contractors:	Pacific Pile and Marine (construction) and GeoEngineers (engineering)
Subcontractors:	GeoEngineers and Pacific Pile and Marine

2.0 BACKGROUND INFORMATION

2.1. Site Location

The Site is located in the St. Joe River Valley of the Bitterroot Mountains in northern Idaho, approximately one mile west of the town of Avery in Shoshone County. The St. Joe River borders the Site to the south and Highway 50 borders the Site to the north.

- The Site is located in the NW quarter of Section 16, Township 45 North, Range 5 East, Willamette Meridian.
- Latitude 47° 13’ 57” North and Longitude W 115° 43’ 40” West.

2.2. Site History

Detailed information regarding Site and operational history, previous investigations and regulatory history and cleanup actions are presented in EPA’s EE/CA (E&E, 2010) and/or Supplemental Investigation Report (GeoEngineers, 2011) and are summarized in the Avery Landing Removal Action Work Plan (Work Plan; GeoEngineers, 2013).

3.0 WORK PLAN

In general, EPA's selected removal action requires the excavation of contaminated subsurface soil. The conceptual design and preliminary approach for the removal action that will be performed by Potlatch is summarized in the Avery Landing Removal Action Work Plan (Work Plan; GeoEngineers, 2013).

3.1. Field Activities

The following activities are anticipated for Potlatch field personnel during the implementation of the Potlatch Property removal action:

- Construction Observation

3.2. Field Personnel and Training

Name of Employee	First Aid	CPR
Terrance Cundy	Dec 2011	Dec 2011
Brandon Miller	Dec 2011	Nov 2011
Richard Reeves	Dec 2011	Nov 2011

4.0 EMERGENCY INFORMATION

4.1. Evacuation and Contact Information

4.1.1. Primary Medical Facility

Hospital Name and Address: Benewah Community Hospital
229 South 7th Street
St. Maries, Idaho 83861

Phone Numbers (Hospital ER): Phone: 208.245.5551
Distance: 45.8 miles
Route to Hospital:

1. Head west on Milwaukee Rd Rail-Trail/NF-50/St Joe River Rd – go 45.8 mile.
2. Turn left onto ID-3 S – go 0.6 mile.
3. Turn right onto College Ave – go 0.2 mile.
4. Turn left onto S 8th St - Destination will be on the right.

Map to Hospital:

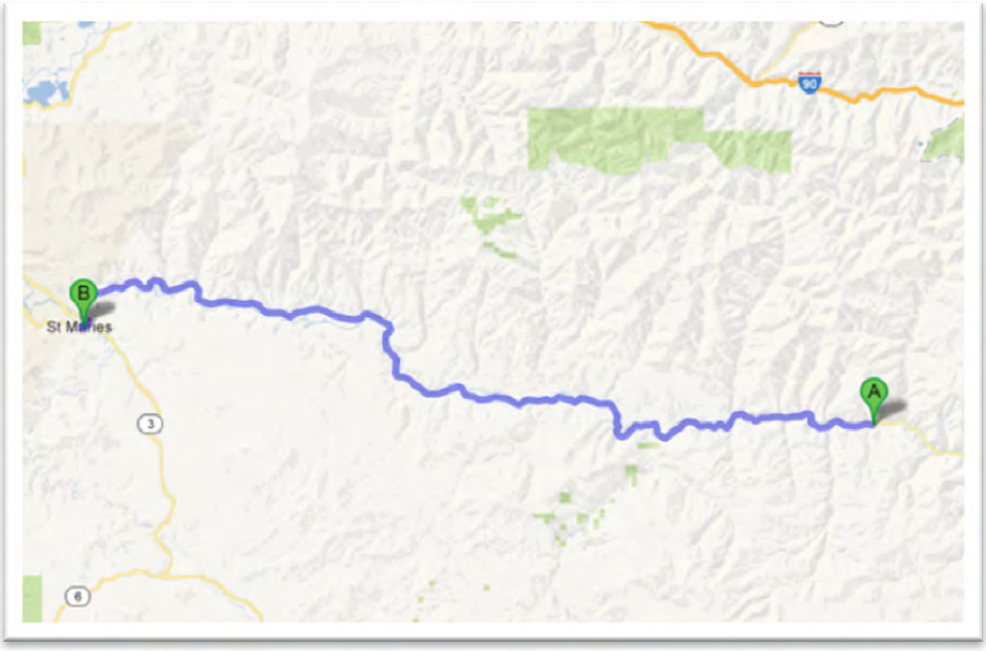

Location of Nearest Telephone:	Cell phones are carried by field personnel.
Nearest Fire Extinguisher:	Located in the GeoEngineers vehicle on-site.
Nearest First-Aid Kit:	Located in the GeoEngineers vehicle on-site.

4.1.2. Alternate Medical Facility

Hospital Name and Address:	Shoshone Medical Center 25 Jackass Gulch Road Kellogg, Idaho 83837
Phone Numbers (Hospital ER):	Phone: 208.784.1221
Distance:	42 miles

Route to Hospital:

1. Head west on Milwaukee Rd Rail-Trail/NF-50/St Joe River Rd – go 5.5 miles
2. Turn right onto NF-225/Slate Creek Rd - go 14.5 mile
3. Turn right to stay on NF-225/Slate Creek Rd – go 3.1 miles
4. Continue onto Hord's Ranch Rd/NF-985 - go 2.6 miles
5. Turn left onto NF-456/Placer Creek Rd - go 3.3 miles

6. NF-456/Placer Creek Rd turns slightly right and becomes King St - go 0.4 miles
7. King St turns right and becomes Bank St – go 0.1 miles
8. Turn left onto 2nd St – go 0.2 miles
9. Turn left onto River St – go 0.3 miles
10. Continue onto N Frontage Rd – go 0.1 mile
11. Turn left to merge onto I-90 W – go 11 mile
12. Take exit 49 for Bunker Ave toward Silver Mtn. – go 0.2 mile
13. Turn right onto Bunker Ave – Destination will be on the right

Map to Hospital:

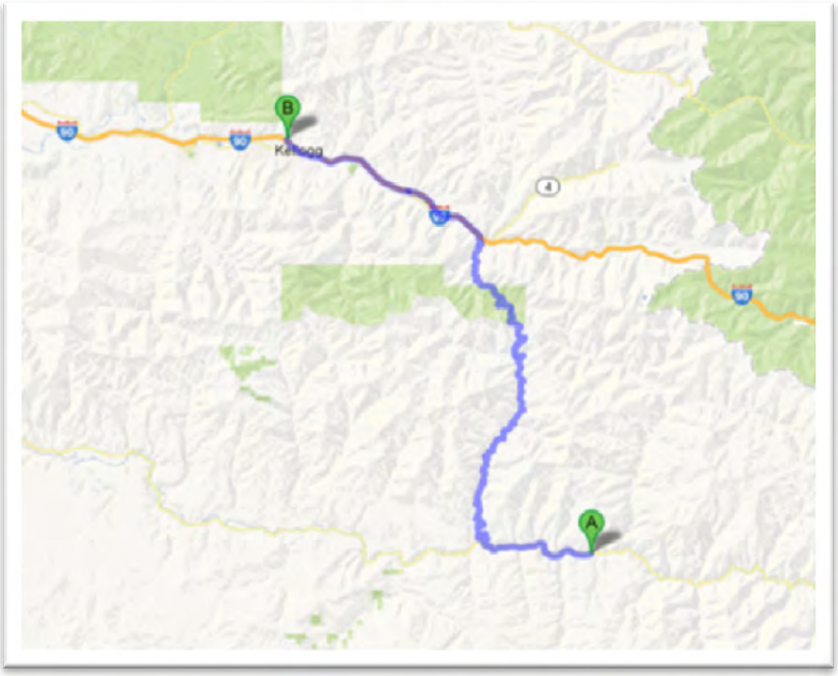

Location of Nearest Telephone:	Cell phones are carried by field personnel.
Nearest Fire Extinguisher:	Located in the GeoEngineers vehicle on-site.
Nearest First-Aid Kit:	Located in the GeoEngineers vehicle on-site.

4.2. Emergency Contact Information

Ambulance/Fire/Police

- 9-1-1 (Emergency service to Avery is provided by Benewah County. USFS (Avery) may also be able to respond)

Poison Control

- (800) 732-6985

Emergency Response

- Statewide Medical Emergency Response – 208.846.7610
- Northwest Medstar (Helicopter Evacuation) – 800.422.2440

Utility Locate

- Avista Emergency Utility Line Locate – 800.227.9187
- Avista Utility Line Locate (Benewah and Shoshone Counties – 800.398.3285

Fuel/Chemical Spills

- State Response Center – 800.632.8000
- National Response Center – 800.424.8802

Forest Fires

- Idaho Department of Lands (St. Maries) – 208.245.4551
- United States Forest Service (St. Maries) – 208.245.2531

County Sheriffs (Dispatch)

- Benewah County (St. Maries) – 208.245.2555
- Shoshone County (Wallace) – 208.556.1114

4.3. Standard Emergency Procedures

Get help

- Send another worker to phone 9-1-1 (if necessary)
- As soon as feasible, notify PPM Superintendent
    - Craig Cearley – 206.909.1798
- As soon as feasible, notify GeoEngineers' Technical Project Manager
    - John Herzog – 206.406.6431

Reduce risk to injured person

- Turn off equipment
- Move person from injury location (if in life-threatening situation only)
- Keep person warm
- Perform CPR (if necessary)

Transport injured person to medical treatment facility (if necessary)

- By ambulance (if necessary) or vehicle
- Stay with person at medical facility

- Keep GeoEngineers manager apprised of situation and notify Human Resources Manager of situation
- As soon as feasible, notify Potlatch:
  - Terrance Cundy – 208.883.1668 (O), 208.301.0410 (C)
  - Brandon Miller – 208.245.6436 (O), 208.874.7588 (C)

5.0 HAZARD ANALYSIS

This section presents hazards that may be potentially present at the Site.

5.1. Physical Hazards

- Drill rigs (Monitoring Well Installation)
- Backhoe
- Trackhoe
- Off-Road dump truck
- Front End Loader
- Excavations/trenching (1:1 slopes for Type B soil)
- Shored/braced excavation if greater than 4 feet of depth
- Overhead hazards/power lines
- Tripping/puncture hazards (debris on-Site, steep slopes or pits)
- Unusual traffic hazard – Street traffic
- Heat/Cold, Humidity
- Utilities/ utility locate

5.1.1. Safe Work Practices

- Work areas will be marked by the construction contractor with reflective cones, barricades and/or caution tape. High-visibility vests will be worn by on-Site personnel to ensure they can be seen by vehicle and equipment operators.
- Field personnel will be aware at all times of the location and motion of heavy equipment in the area of work to ensure a safe distance between personnel and the equipment. Personnel will be visible to the operator at all times and will remain out of the swing and/or direction of the equipment apparatus. Personnel will approach operating heavy equipment only when they are certain the operator has indicated that it is safe to do so through hand signal or other acceptable means.
- Personnel entry into unshored or unsloped excavations deeper than 4 feet is not allowed. Any trenching and shoring requirements will follow guidelines established in OSHA 1926.651 Excavation Requirements.
- Personnel will avoid tripping hazards, steep slopes, pits and other hazardous encumbrances.

5.2. Chemcial Hazards

CHEMICAL HAZARDS AND EXPOSURES (POTENTIALLY PRESENT AT SITE)

Compound/ Description	Exposure Limits/IDLH	Exposure Routes	Symptoms/Health Effects
Diesel Fuel — liquid with a characteristic odor	None established by OSHA, but ACGIH has adopted 100 mg/m^3 for a TWA (as total hydrocarbons)	Ingestion, inhalation, skin absorption, skin and eye contact	Irritated eyes, skin, and mucous membrane; fatigue; blurred vision; dizziness; slurred speech; confusion; convulsions; headache; dermatitis
Polycyclic aromatic hydrocarbons (PAH) as coal tar pitch volatiles	PEL 0.2 mg/m^3 TLV 0.2 mg/m^3 REL 0.1 mg/m^3 IDLH 80 mg/m^3	Inhalation, ingestion, skin and/or eye contact	Dermatitis, bronchitis, potential carcinogen
PCBs (as Arochlor 1254)—colorless to pale-yellow viscous liquid with a mild, hydrocarbon odor	PEL 0.5 mg/m^3 TLV 0.5 mg/m^3 REL 0.001 mg/m^3 IDLH 5.0 mg/m^3	Inhalation (dusts or mists), skin absorption, ingestion, skin and/or eye contact	Irritated eyes, chloracne, liver damage, reproductive effects, potential carcinogen
Benzene	OSHA PEL 1 ppm Short term: 5 ppm ACGIH PEL 0.5 ppm	Inhalation, skin absorption, ingestion, skin and/or eye contact	Irritated eyes, skin, nose, respiratory system; dizziness; headache, nausea, staggered gait; anorexia, lassitude (weakness, exhaustion); dermatitis; bone marrow depression; [potential occupational carcinogen]
Xylene (m, p, o)	OSHA PEL 100 ppm NIOSH REL 100 ppm Short term: 150 ppm	Inhalation, skin absorption, ingestion, skin and/or eye contact	Irritation eyes, skin, nose, throat; dizziness, excitement, drowsiness, incoordination, staggering gait; corneal vacuolization; anorexia, nausea, vomiting, abdominal pain; dermatitis
Trimethylbenzene (1,2,4 and 1,3,5)	NIOSH REL 25 ppm	Inhalation, skin absorption, ingestion, skin and/or eye contact	Irritation eyes, skin, nose, throat, respiratory system; bronchitis; hypochromic anemia; headache, drowsiness, lassitude (weakness, exhaustion), dizziness, nausea, incoordination; vomiting, confusion; chemical pneumonitis (aspiration liquid)

Compound/ Description	Exposure Limits/IDLH	Exposure Routes	Symptoms/Health Effects
Trichloroethene	OSHA PEL 100 ppm	Inhalation, skin absorption, ingestion, skin and/or eye contact	Irritation eyes, skin; headache, visual disturbance, lassitude (weakness, exhaustion), dizziness, tremor, drowsiness, nausea, vomiting; dermatitis; cardiac arrhythmias, paresthesia; liver injury; [potential occupational carcinogen]
p-Nitroaniline	OSHA PEL 1 ppm NIOSH REL 3 mg/m^3	Inhalation, skin absorption, ingestion, skin	irritation nose, throat; cyanosis, ataxia; tachycardia, tachypnea; dyspnea (breathing difficulty); irritability; vomiting, diarrhea; convulsions; resp arrest; anemia; methemoglobinemia; jaundice
Dinitro-o-cresol	OSHA PEL 0.2 mg/m^3 NIOSH REL 0.2 mg/m^3	Inhalation, skin absorption, ingestion, skin	Sense of well-being; headache, fever, lassitude (weakness, exhaustion), profuse sweating, excess thirst, tachycardia, hyperpnea, cough, short breath, coma
Antimony	NIOSH REL: TWA 0.5 mg/m^3 OSHA PEL: TWA 0.5 mg/m^3	Inhalation, skin absorption, ingestion, skin and/or eye contact	Irritation eyes, skin, nose, throat, mouth; cough; dizziness; headache; nausea, vomiting, diarrhea; stomach cramps; insomnia; anorexia; unable to smell properly
Arsenic	NIOSH REL: 0.002 mg/m^3 (15-minute) OSHA PEL: TWA 0.010 mg/m^3	Inhalation, skin absorption, ingestion, skin and/or eye contact	Ulceration of nasal septum, dermatitis, gastrointestinal disturbances, peripheral neuropathy, resp irritation, hyperpigmentation of skin, [potential occupational carcinogen]
Barium Chloride (as Ba)	NIOSH REL: TWA 0.5 mg/m^3 OSHA PEL: TWA 0.5 mg/m^3 Also applies to other soluble barium compounds (as Ba) except Barium sulfate.	Inhalation, ingestion, skin and/or eye contact	Irritation eyes, skin, upper respiratory system; skin burns; gastroenteritis; muscle spasm; slow pulse, extrasystoles; hypokalemia

Compound/ Description	Exposure Limits/IDLH	Exposure Routes	Symptoms/Health Effects
Beryllium & beryllium compounds (as Be)	NIOSH REL: 0.0005 mg/m^3 OSHA PEL: TWA 0.002 mg/m^3 C 0.005 mg/m^3 (30 minutes), with a maximum peak of 0.025 mg/m^3	Inhalation, skin and/or eye contact	Berylliosis (chronic exposure): anorexia, weight loss, lassitude (weakness, exhaustion), chest pain, cough, clubbing of fingers, cyanosis, pulmonary insufficiency; irritation eyes; dermatitis; [potential occupational carcinogen]
Cobalt metal dust and fume (as Co)	NIOSH REL: TWA 0.05 mg/m^3 OSHA PEL: TWA 0.1 mg/m^3	Inhalation, ingestion, skin and/or eye contact	Cough, dyspnea (breathing difficulty), wheezing, decreased pulmonary function; weight loss; dermatitis; diffuse nodular fibrosis; resp hypersensitivity, asthma
Iron oxide dust and fume (as fe)	NIOSH REL: TWA 5 mg/m^3 OSHA PEL: TWA 10 mg/m^3	Inhalation	Benign pneumoconiosis with X-ray shadows indistinguishable from fibrotic pneumoconiosis (siderosis)
Lead	NIOSH REL: TWA (8-hour) 0.050 mg/m^3 OSHA PEL: TWA 0.050 mg/m^3	Inhalation, ingestion, skin and/or eye contact	lassitude (weakness, exhaustion), insomnia; facial pallor; anorexia, weight loss, malnutrition; constipation, abdominal pain, colic; anemia; gingival lead line; tremor; paralysis wrist, ankles; encephalopathy; kidney disease; irritation eyes; hypertension
Manganese Compounds	NIOSH REL: TWA 1 mg/m^3 ST 3 mg/m^3 OSHA PEL: 5 mg/m^3	Inhalation, ingestion	Manganism; asthenia, insomnia, mental confusion; metal fume fever: dry throat, cough, chest tightness, dyspnea (breathing difficulty), rales, flu-like fever; low-back pain; vomiting; malaise (vague feeling of discomfort); lassitude (weakness, exhaustion); kidney damage
Mercury Compounds	NIOSH REL: Hg Vapor: TWA 0.05 mg/m^3 Other: C 0.1 mg/m^3 [skin] OSHA PEL: TWA 0.1 mg/m^3	Inhalation, skin absorption, ingestion, skin and/or eye contact	Irritation eyes, skin; cough, chest pain, dyspnea (breathing difficulty), bronchitis, pneumonitis; tremor, insomnia, irritability, indecision, headache, lassitude (weakness, exhaustion); stomatitis, salivation; gastrointestinal disturbance, anorexia, weight loss; proteinuria

Notes:

IDLH = immediately dangerous to life or health

OSHA = Occupational Safety and Health Administration

ACGIH = American Conference of Governmental Industrial Hygienists

mg/m3 = milligrams per cubic meter
TWA = time-weighted average (Over 8 hrs.)
PEL = permissible exposure limit
TLV = threshold limit value (over 10 hrs.)
STEL = short-term exposure limit (15 min)
ppm = parts per million

5.2.1. Polycyclic Aromatic Hydrocarbons (PAHs) and Carcinogenic Polycyclic Aromatic Hydrocarbons (cPAHs)

Exposure to cPAHs can occur via inhalation of vapors, ingestion, and skin and eye contact. Skin contact can result in reddening or corrosion. Ingestion can cause nausea, vomiting, blood pressure fall, abdominal pain, convulsions and coma. Damage to the central nervous system can also occur. The U.S. Department of Health and Human Services (1989) has classified 15 PAHs compounds as having sufficient evidence for carcinogenicity, while the U.S. EPA (1990) has classified at least 5 of the identified PAHs as human carcinogens. There is no currently assigned PEL-TWA for cPAHs, but the closely related material coal tar is listed as coal tar pitch volatiles with a PEL-TWA of 0.2 mg/m3. PAHs and cPAHs as soil contaminants can be irritating to eyes and mucous membranes. PAHs are also formed during combustion and are linked to lung cancers with exposure to combustion byproducts. Lymphatic cancers are reported in the literature with PAHs in the presence of carbon black.

5.2.2. Polychlorinated Biphenyl Compounds (PCBs)

PCB is a generic term for a range of polychlorinated biphenyl compounds used commercially in heat transfer media and in the chemical/coatings industry. PCBs have been marketed commercially under the trade names Askarel® and Aroclor®, with a designation referring to the percent weight of chlorine. Prolonged skin contact with PCBs may cause acne-like symptoms, known as chloracne. Irritation to eyes, nose and throat may also occur. Acute and chronic exposure can cause liver damage, and symptoms of edema, jaundice, anorexia, nausea, abdominal pains and fatigue. If pregnant women accidentally ingest PCBs, stillbirth or infant skin and eye problems may occur. PCBs are a suspect human carcinogen. The EPA currently classifies PCBs as a Class B2, or probable, human carcinogen. The Washington State Permissible Exposure Limit (PEL)-Time Weighted Average (TWA) for PCBs with 54 percent chlorine content is 0.5 milligrams per cubic meter (mg/m^3), while the PEL-TWA for PCBs with 42 percent chlorine is 1 mg/m^3. Skin exposure may contribute significantly to uptake of these chemicals, and therefore all skin exposure to the liquid product or contaminated water, soil or dust should be strictly avoided.

5.2.3. Safe Work Practices

- Potlatch employees will not be handling contaminated soils or water.
- Appropriate work clothes including long sleeve shirts and pants will minimize skin exposure to dust.
- Construction contractor is responsible for watering the Site as needed to eliminate dust.
- Potlatch employees should work upwind of construction activities to further reduce exposure to dust.
- Personnel should wash hands at the Facility before eating or leaving the Facility.

5.3. Biological Hazards

Hazard	Prevention Procedure
Poison Ivy or other vegetation	Wear work gloves and long sleeve shirt
Insects or snakes	Wear work gloves and long sleeve shirt
Used hypodermic needs or other infectious hazards	Do not pick up or contact
Others: Bird droppings	Wear hard hat, gloves and long sleeve shirt

5.3.1. Safe Work Practices

- Appropriate work clothes including long sleeve shirts and pants will minimize skin exposure.

5.4. Hazard Reporting/Documentation

Any significant issues will be reported in the Potlatch Corrective Action Reporting system.

6.0 AIR MONITORING PLAN

Air monitoring will be conducted by the construction and engineering contractors. If any air quality issues arise, Potlatch personnel will move to safe areas. There is no need for Potlatch personnel to work in contaminated AREAS.

7.0 SITE CONTROL PLAN

Work zones will be considered to be within the delineated construction area or within 50 feet of any active construction equipment. Employees should work upwind of the machinery if possible. To the extent practicable, use the buddy system. Do not approach heavy equipment unless you are sure the operator sees you and has indicated it is safe to approach.

7.1. Traffic or Vehicle Access Control Plan

Traffic entering and exiting the Site will be through controlled access points. Flaggers will be used as necessary to control traffic at the controlled access points. Site personnel will be instructed to stop and look both ways before crossing any vehicle access point/roadway.

7.2. Site Work Zones

Fencing (chain link, orange construction netting, silt fence or similar), Survey Tape, Traffic Cones, Posted signage and/or barricades will be used to delineate the work zone and excluding non-Site personnel from entering the work zone.

7.3. Buddy System

Personnel on-Site should use the buddy system (pairs), particularly whenever communication is restricted. If only one Potlatch employee is on-Site, a buddy system can be arranged with subcontractor/ contractor personnel.

7.4. Site Communication Plan

Positive communications (within sight and hearing distance or via radio) should be maintained between pairs on-site, with the pair remaining in proximity to assist each other in case of emergencies. The team should prearrange hand signals or other emergency signals for communication when voice communication becomes impaired (including cases of lack of radios or radio breakdown). In these instances, you should consider suspending work until communication can be restored. If not, the following are some examples for communication:

- Hand gripping throat: Out of air, can't breathe.
- Gripping partner's wrist or placing both hands around waist: Leave area immediately, no debate.
- Hands on top of head: Need assistance.
- Thumbs up: Okay, I'm all right: or I understand.
- Thumbs down: No, negative.

Communications between field crews is summarized in the following table:

Type of Communication	Primary Means	Back-up Means
Communications with Fire and Emergency Services	Cell Phone	Land Line
Communications with office	Radio	Cell Phone
Emergency / Drills Communications among field crew members	Radios Eye contact, hand signals (equipment operators)	Horns in machinery, Portable air horns, flashing lights

In the event of a spill or injury, the following procedures should be followed:

- Summon help and alert others in the vicinity of the release. Construction equipment will have a two-way radio to notify other Site workers of the incident.
- Evacuate immediate area and/or provide care to anyone injured. Call 9-1-1 and follow the emergency procedures specified in Section 4.0. Note that a land based telephone line may be required if cell phone coverage is determined to be unreliable. A land line telephone is located in the main construction trailer.
- If potential fire or explosion hazards exist initiate evacuation procedures. Call 9-1-1.
- Respond defensively to any uncontrolled spill.
- Use appropriate personal protective equipment when responding to any spill, as described in the HASP.
- Protect drains and/or surface water (river) by use of absorbent, booms and/or drain covers.

- Notify the on-Site safety coordinator and the EPA On-Scene Coordinator.
- Notify other trained staff to assist with the spill response and cleanup activities.
- Coordinate response activities with local emergency personnel (fire department), if necessary.
- Notify appropriate agency if a release has entered the environment. Refer to the Contingency Plan included as Appendix E of the Work Plan.

Spill response and prevention activities for Site work are presented in the Contingency Action Plan included at Appendix E of the Work Plan. Contact information for Site personnel are presented in the following table:

Contact Name	Organization/Role	Telephone Numbers
Earl Liverman	EPA On-Scene Coordinator	Office: 208.664.4858
Terrance Cundy	Potlatch Project Manger	Office: 208.883.1668 Cell: 208.301.0410
Brandon Miller	Potlatch St Joe District Forester	Office: 208.245.6436 Cell: 208.874.7588
Wilbur Clark	Pacific Pile & Marine, L.P. Project Manager	Office: 206-331-3873 Cell: 206-300-1312
Craig Cearley	Pacific Pile & Marine, L.P. Superintendent	Cell: 206-909-1798
John Herzog	GeoEngineers Technical Project Manager	Office: 206-239-3252 Cell: 206-406-6431
Robert Trahan	GeoEngineers Field Coordinator	Office: 206-239-3253 Cell: 206-240-2300
Abhijit Joshi	GeoEngineers Site Engineer	Office: 206-239-3256 Cell: 425-223-9028
Paul Robinette	GeoEngineers Site Engineer	Office: 253-383-4940 Cell: 253-278-0273

8.0 PERSONAL PROTECTIVE EQUIPMENT

Appropriate protective personal protective equipment (PPE) will be selected to ensure worker safety. In general, this includes clothing and footwear appropriate to weather and terrain, high visibility vests, hearing protection and hardhats.

If Site construction or engineering personnel are required to wear air-purifying respirators, Potlatch personnel will move to safe areas where respirators are not required.

9.0 MISCELLANEOUS

9.1. Personnel Medical Surveillance

All air quality data collected are available to any Potlatch employee exposed at the Site.

9.2. Spill Containment Plan (Drum and Container Handling)

Contractors or subcontractors will be responsible for developing and implementing Spill Prevention and Containment Plans for use during Site work. Spill prevention and containment measures area presented in the Contingency Action Plan included as Appendix E of the Work Plan.

9.3. Sanitation

Washrooms will be available for use during Site work.

9.4. Lighting

Site activities will be conducted during daylight hours. Artificial lighting will be used as necessary if work is conducted after daylight hours.

10.0 LIMITATIONS

Any electronic form, facsimile or hard copy of the original document (email, text, table, and/or figure), if provided, and any attachments are only a copy of the original document. The original document is stored by Potlatch and will serve as the official document of record.

11.0 REFERENCES

E & E (Ecology and Environment, Inc.), "Draft Final Engineering Evaluation /Cost Analysis, Avery Landing Site, Avery, Idaho," prepared for the United States Environmental Protection Agency, Region 10, dated December 2010.

GeoEngineers, Inc., "Final Removal Action Work Plan, Avery Landing Site, Avery, Idaho" GEI File No. 2315-016-02, prepared for United States Environmental Protection Agency on Behalf of the Potlatch Corporation, dated May 10, 2013.

GeoEngineers, Inc., "Supplemental Site Investigation, Avery Landing Site, Avery, Idaho," GEI File No. 2315-016-01, prepared for Potlatch Forest Holdings, Inc., dated November 9, 2011.

ATTACHMENT D-2
GeoEngineers Health and Safety Plan

Site Health and Safety Plan

Avery Landing Site
Avery, Idaho

for
U.S. Environmental Protection Agency on Behalf of Potlatch Land and Lumber, LLC

May 13, 2013

GeoEngineers

Plaza 600 Building
600 Stewart Street, Suite 1700
Seattle, WA 98101
206.728.2674

Site Health and Safety Plan

Avery Landing Site
Avery, Idaho

File No. 2315-016-02

May 13, 2013

Approvals:

Signature: Date: May 13, 2013

John M. Herzog, PhD, Principal, GeoEngineers

Signature: Date: May 13, 2013

Robert S. Trahan, Environmental Geologist, GeoEngineers

Signature: Wayne Adams Date: May 13, 2013

Wayne Adams, Health & Safety Program Manager, GeoEngineers

RST:JMH:csv

Disclaimer: Any electronic form, facsimile or hard copy of the original document (email, text, table, and/or figure), if provided, and any attachments are only a copy of the original document. The original document is stored by GeoEngineers, Inc. and will serve as the official document of record.

Copyright© 2013 by GeoEngineers, Inc. All rights reserved.

GeoEngineers

Table of Contents

1.0 INTRODUCTION 1

1.1. Liability Clause 1
1.2. General Project Information 1

2.0 BACKGROUND INFORMATION 1

2.1. Site Location 1
2.2. Site History 2

3.0 WORK PLAN 2

3.1. Field Activities 2
3.2. Field Personnel, Training Records, and Chain of Command 3

4.0 EMERGENCY INFORMATION 4

4.1. Evacuation and Contact Information 4
4.1.1. Primary Medical Facility 4
4.1.2. Alternate Medical Facility 5
4.2. Emergency Contact Information 6
4.3. Standard Emergency Procedures 7

5.0 HAZARD ANALYSIS 7

5.1. Physical Hazards 8
5.1.1. Safe Work Practices 8
5.2. Biological Hazard Mitigation Measures and Procedures 9
5.2.1. Rodents and Wildlife 9
5.2.2. Poisonous Snakes 10
5.2.3. Insects, Bees and Spiders 10
5.3. Ergonomic Hazard Mitigation Measures and Procedures 11
5.3.1. Avoiding Lifting Injuries 11
5.3.2. Proper Lifting Techniques 11
5.4. Engineering Controls 11
5.5. Chemical Hazards 11
5.5.1. Polycyclic Aromatic Hydrocarbons (PAHs) and Carcinogenic Polycyclic Aromatic Hydrocarbons (cPAHs) 14
5.5.2. Polychlorinated Biphenyl Compounds (PCBs) 15
5.6. Biological Hazards 15
5.7. Hazards Reporting/Documentation 15

6.0 AIR MONITORING PLAN 16

7.0 SITE CONTROL PLAN 17

7.1. Traffic or Vehicle Access Control Plans 17
7.2. Site Work Zones 17
7.3. Buddy System 18
7.4. Site Communication Plan 18
7.5. Decontamination Procedures 20
7.6. Waste Disposal or Storage 20

8.0 PERSONAL PROTECTIVE EQUIPMENT 20

8.1. Personal Protective Equipment Inspections 21
8.2. Respirator Selection, Use and Maintenance 22
8.3. Respirator Cartridges 22
8.4. Respirator Inspection and Cleaning 22

9.0 ADDITIONAL ELEMENTS 22

9.1. Cold Stress Prevention 22
9.2. Heat Stress Prevention 23
9.3. Emergency Response 23

10.0 MISCELLANEOUS 24

10.1. Personnel Medical Surveillance 24
10.2. Spill Containment Plans (Drum and Container Handling) 24
10.3. Sampling, Managing and Handling Drums and Containers 24
10.4. Entry Procedures for Tanks or Vaults (Confined Spaces) 25
10.5. Sanitation 25
10.6. Lighting 25
10.7. Excavation, Trenching and Shoring 25

11.0 DOCUMENTATION TO BE COMPLETED FOR HAZWOPER PROJECTS 25

12.0 LIMITATIONS 26

13.0 REFERENCES 26

1.0 INTRODUCTION

This Health and Safety Plan (HASP) is to be used in conjunction with the GeoEngineers Safety Program Manual for the Avery Landing Site (Site) removal action. Together, the written safety programs and this HASP constitute the site safety plan for this Site. This plan is to be used by GeoEngineers personnel on this site and must be available on-Site. If the work entails potential exposures to other substances or unusual situations, additional safety and health information will be included, and the plan will need to be approved by the GeoEngineers Health and Safety Manager. All plans are to be used in conjunction with current standards and policies outlined in the GeoEngineers Health and Safety Program Manual.

1.1. Liability Clause

If requested by subcontractors, this HASP may be provided for informational purposes only. In this case, Form C-3 shall be signed by the subcontractor. Please be advised that this HASP is intended for use by GeoEngineers Employees only. Nothing herein shall be construed as granting rights to GeoEngineers' subcontractors or any other contractors working on this site to use or legally rely on this HASP. GeoEngineers specifically disclaims any responsibility for the health and safety of any person not employed by them.

1.2. General Project Information

Project Name:	Avery Landing Removal Action
Project Number:	2315-016-02
Type of Project:	Construction Observation and Compliance Sampling
Start/Completion:	Spring 2013/Fall 2013
Contractors:	Pacific Pile and Marine
Subcontractors:	TBD

2.0 BACKGROUND INFORMATION

2.1. Site Location

The Site is located in the St. Joe River Valley of the Bitterroot Mountains in northern Idaho, approximately one mile west of the town of Avery in Shoshone County. The St. Joe River borders the Site to the south and Highway 50 borders the Site to the north.

- The Site is located in the NW quarter of Section 16, Township 45 North, Range 5 East, Willamette Meridian.

- Latitude 47° 13' 57" North and Longitude W 115° 43' 40" West.

2.2. Site History

Detailed information regarding Site and operational history, previous investigations and regulatory history and cleanup actions are presented in EPA's EE/CA (E&E, 2010) and/or Supplemental Investigation Report (GeoEngineers, 2011) and are summarized in the Avery Landing Removal Action Work Plan (Work Plan; GeoEngineers, 2013).

3.0 WORK PLAN

In general, EPA's selected removal action requires the excavation of contaminated soil. Residual contamination remaining at the Site is expected to attenuate by way of natural processes and the progress of the attenuation will be monitored over-time, following the completion of the removal action.

The objectives of the removal action are to:

- Remove the remaining components of the product containment, collection, and extraction systems that were installed as part of the 1994 and 2000 removal actions;
- Remove soil exceeding field screening methods within the upland and river bank areas;
- Remove, treat, and/or manage petroleum product that is present as light Non-Aqueous Phase Liquids (LNAPL) on groundwater within the excavations;
- Dispose of waste streams in accordance with CERCLA's off-site rule requirements; and
- Restore portions of the Site affected by the removal action including river bank reconstruction, backfilling, compaction, grading and re-vegetation.

The conceptual design and preliminary approach for the removal action that will be performed by Potlatch is summarized in the Avery Landing Removal Action Work Plan (Work Plan; GeoEngineers, 2013).

3.1. Field Activities

The following activities are anticipated for GeoEngineers field personnel during the implantation of the Potlatch Property removal action and post-construction monitoring activities:

- Construction Observation
- Field Screening of Soil Samples
- Headspace Vapor Measurements
- Verification Soil Sample Collection
- Soil Stockpile Sample Collection
- Groundwater Treatment System Sampling
- Surface Water Quality Monitoring

- Recovery of Free Product
- Product Sample Collection
- Monitoring Well Installation
- Monitoring Well Development
- Groundwater Sample Collection

3.2. Field Personnel, Training Records, and Chain of Command

LIST OF FIELD PERSONNEL AND TRAINING

Name of Employee	Level of HAZWOPER Training (24-/40-hr)	Date of 8-Hr Refresher Training	Date of HAZWOPER Supervisor Training	First Aid/ CPR	Date of Respirator Fit Test
John Herzog	40	May-2013	N/A	May-2013	April-2013
Robert Trahan	40	Sept-2012	June-2008	April-2013	April-2013
Abhijit Joshi	40	Oct-2012	N/A	March-2011	May-2013
Paul Robinette	40	Apr-2012	Dec-2002	Dec-2011	Aug-2012

Chain of Command	Title	Name	Telephone Numbers
1	Technical Project Manager	John Herzog	206.239.3252
2	HAZWOPER Supervisor(s)	Robert Trahan	206.239.3253
3	Field Engineer/Geologist(s)	Robert Trahan	206.239.3253
		Abhijit Joshi	206.239.3256
		Paul Robinette	253.278.0273
4	Site Safety and Health Supervisor(s)*	Robert Trahan	206.239.3253
		Abhijit Joshi	206.239.3256
		Paul Robinette	253.278.0273
5	Client Assigned Site Supervisor	Terrance Cundy	208-883-1668
6	Health and Safety Program Manager	Wayne Adams	253.722.2793
N/A	Contractor	Pacific Pile and Marine	206.331.3873
N/A	Current Owner	Potlatch Land and Lumber	509.835.1500

* **Site Safety and Health Supervisor --** The individual present at a hazardous waste site responsible to the employer and who has the authority and knowledge necessary to establish the site-specific health and safety plan and verify compliance with applicable safety and health requirements. Emergency Information

4.0 EMERGENCY INFORMATION

4.1. Evacuation and Contact Information

4.1.1. Primary Medical Facility

Hospital Name and Address: Benewah Community Hospital
229 South 7th Street
St. Maries, Idaho 83861

Phone Numbers (Hospital ER): Phone: 208.245.5551
Distance: 45.8 miles
Route to Hospital:

1. Head west on Milwaukee Rd Rail-Trail/NF-50/St Joe River Rd – go 45.8 mile.
2. Turn left onto ID-3 S – go 0.6 mile.
3. Turn right onto College Ave – go 0.2 mile.
4. Turn left onto S 8th St - Destination will be on the right.

Map to Hospital:

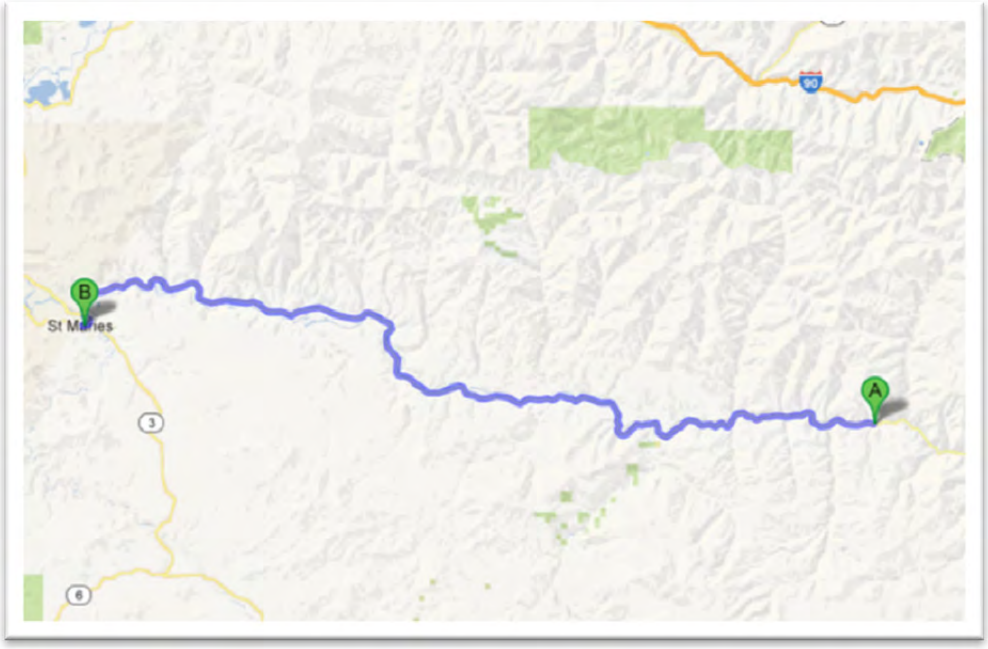

Location of Nearest Telephone: Cell phones are carried by field personnel.

Nearest Fire Extinguisher: Located in the GeoEngineers vehicle on-site.

Nearest First-Aid Kit: Located in the GeoEngineers vehicle on-site.

4.1.2. Alternate Medical Facility

Hospital Name and Address: Shoshone Medical Center
25 Jackass Gulch Road
Kellogg, Idaho 83837

Phone Numbers (Hospital ER): Phone: 208.784.1221

Distance: 42 miles

Route to Hospital:

1. Head west on Milwaukee Rd Rail-Trail/NF-50/St Joe River Rd – go 5.5 miles
2. Turn right onto NF-225/Slate Creek Rd - go 14.5 mile
3. Turn right to stay on NF-225/Slate Creek Rd – go 3.1 miles
4. Continue onto Hord's Ranch Rd/NF-985 - go 2.6 miles
5. Turn left onto NF-456/Placer Creek Rd - go 3.3 miles
6. NF-456/Placer Creek Rd turns slightly right and becomes King St - go 0.4 miles
7. King St turns right and becomes Bank St – go 0.1 miles
8. Turn left onto 2nd St – go 0.2 miles
9. Turn left onto River St – go 0.3 miles
10. Continue onto N Frontage Rd – go 0.1 mile
11. Turn left to merge onto I-90 W – go 11 mile
12. Take exit 49 for Bunker Ave toward Silver Mtn. – go 0.2 mile
13. Turn right onto Bunker Ave – Destination will be on the right

Map to Hospital:

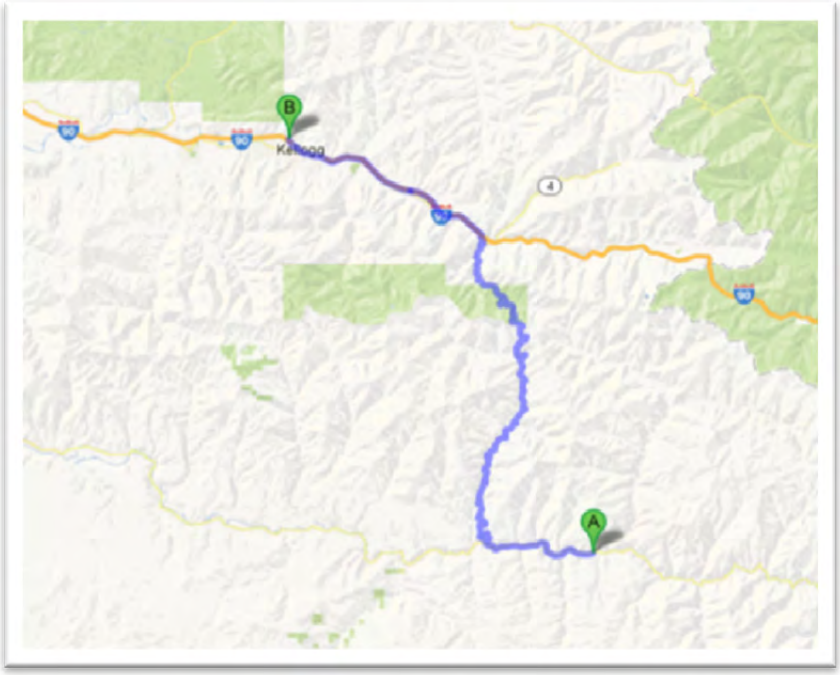

Location of Nearest Telephone:	Cell phones are carried by field personnel.
Nearest Fire Extinguisher:	Located in the GeoEngineers vehicle on-site.
Nearest First-Aid Kit:	Located in the GeoEngineers vehicle on-site.

4.2. Emergency Contact Information

Ambulance/Fire/Police

- 9-1-1 (Emergency service to Avery is provided by Benewah County. USFS (Avery) may also be able to respond)

Poison Control

- (800) 732-6985

Emergency Response

- Statewide Medical Emergency Response – 208.846.7610
- Northwest Medstar (Helicopter Evacuation) – 800.422.2440

Utility Locate

- Avista Emergency Utility Line Locate – 800.227.9187
- Avista Utility Line Locate (Benewah and Shoshone Counties – 800.398.3285

Fuel/Chemical Spills

- State Response Center – 800.632.8000
- National Response Center – 800.424.8802

Forest Fires

- Idaho Department of Lands (St. Maries) – 208.245.4551
- United States Forest Service (St. Maries) – 208.245.2531

County Sheriffs (Dispatch)

- Benewah County (St. Maries) – 208.245.2555
- Shoshone County (Wallace) – 208.556.1114

4.3. Standard Emergency Procedures

Get help

- Send another worker to phone 9-1-1 (if necessary)
- As soon as feasible, notify PPM Superintendent
    - Craig Cearley – 206.909.1798
- As soon as feasible, notify GeoEngineers' Technical Project Manager
    - John Herzog – 206.406.6431

Reduce risk to injured person

- Turn off equipment
- Move person from injury location (if in life-threatening situation only)
- Keep person warm
- Perform CPR (if necessary)

Transport injured person to medical treatment facility (if necessary)

- By ambulance (if necessary) or vehicle
- Stay with person at medical facility
- Keep GeoEngineers manager apprised of situation and notify Human Resources Manager of situation
- As soon as feasible, notify Potlatch:
    - Terrance Cundy – 208.883.1668 (O), 208.301.0410 (C)
    - Brandon Miller – 208.245.6436 (O), 208.874.7588 (C)

5.0 HAZARD ANALYSIS

- Identification and evaluation of on-site safety and health hazards;

- A safety and health risk (hazard) analysis for each site task and operation that is identified in the comprehensive work plan.
- This section presents hazards that may be potentially present at the Site. A hazard assessment will be completed at the Site prior to beginning field activities. Updates will be included in the daily log.

5.1. Physical Hazards

- Drill rigs (Monitoring Well Installation)
- Backhoe
- Trackhoe
- Off-Road dump truck
- Front End Loader
- Excavations/trenching (1:1 slopes for Type B soil)
- Shored/braced excavation if greater than 4 feet of depth
- Overhead hazards/power lines
- Tripping/puncture hazards (debris on-site, steep slopes or pits)
- Unusual traffic hazard – Street traffic
- Heat/Cold, Humidity
- Utilities/utility locate

5.1.1. Safe Work Practices

- Utility checklist will be completed as required for the location to preventing drilling or digging into utilities.
- Work areas will be marked with reflective cones, barricades and/or caution tape. High-visibility vests will be worn by on-site personnel to ensure they can be seen by vehicle and equipment operators.
- Field personnel will be aware at all times of the location and motion of heavy equipment in the area of work to ensure a safe distance between personnel and the equipment. Personnel will be visible to the operator at all times and will remain out of the swing and/or direction of the equipment apparatus. Personnel will approach operating heavy equipment only when they are certain the operator has indicated that it is safe to do so through hand signal or other acceptable means.
- Heavy equipment and/or vehicles used on this site will not work within 20 feet of overhead utility lines without first ensuring that the lines are not energized. This distance may be reduced to 10 feet depending on the client and the use of a safety watch.
- Personnel entry into unshored or unsloped excavations deeper than 4 feet is not allowed. Any trenching and shoring requirements will follow guidelines established in OSHA 1926.651 Excavation Requirements.

  - In the event that a worker is required to enter an excavation deeper than 4 feet, a trench box or other acceptable shoring will be employed or the side walls of the excavation will be sloped according to the soil type and guidelines as outlined in DOSH/OSHA regulations.
  - If the shoring/sloping deviates from that outlined in OSHA, it will be designed and stamped by a PE.
  - Prior to entry, personnel will conduct air monitoring as described later in this plan.
  - All hazardous encumbrances and excavated material will be stockpiled at least 2 feet from the edge of a trench or open pit.
  - If concentrations of volatile gases accumulate within an open trench or excavation, the means of entering shall adhere to confined space entry and air monitoring procedures outlined under the air monitoring recommendations in this Plan and/or the GeoEngineers Health and Safety Program.
- Personnel will avoid tripping hazards, steep slopes, pits and other hazardous encumbrances.
  - If it becomes necessary to work within 6 feet of the edge of a pit, slope or other potentially hazardous area, appropriate fall protection measures will be implemented by the Site Safety and Health Supervisor in accordance with OSHA/DOSH regulations and the GeoEngineers Health and Safety Program.
- Cold stress control measures will be implemented according to the GeoEngineers Health and Safety Program to prevent frost nip (superficial freezing of the skin), frost bite (deep tissue freezing), or hypothermia (lowering of the core body temperature). Heated break areas and warm beverages shall be available during periods of cold weather.
- Heat stress control measures required for this site will be implemented according to GeoEngineers Health and Safety Program with water provided on-site.

This section presents hazards that may be potentially present at the Site. A hazard assessment will be completed at the Site prior to beginning field activities. Updates will be included in the daily log.

5.2. Biological Hazard Mitigation Measures and Procedures

Biological hazards can come in the form of wildlife such as rodents, wild animals, insects and spiders. Each of the hazards can present concerns. Exposure can be minimized by following the measures below:

5.2.1. Rodents and Wildlife

Live animals can inflict wounds and can spread diseases such as Rat Bite Fever and Rabies.

- Avoid contact with wild or stray animals. If bitten or scratched, get medical attention immediately.
- Avoid contact with rats or rat-infested buildings. If you can't avoid contact, wear protective gloves and wash your hands regularly.
- Avoid contact with animal and bird droppings. Particles can become airborne and, if inhaled, cause sickness.

- Report dead animals to the proper authorities so they can be disposed of properly.

5.2.2. Poisonous Snakes

Some areas such as dry desert-like hot climates, areas with a lot of underbrush, areas near water, etc. can have snakes.

- Be alert: Snakes may be under or near any type of protective cover, including buildings, driftwood, levees, stalled automobiles, and debris piles. Search thoroughly for snakes before beginning any cleanup or rescue operations.
- Wear Protection: Wear heavy leather or rubber high-topped boots and heavy gloves.
- Use Tools: Use long-handled tools when removing debris. Never expose any part of your body in a place where a snake might hide.

5.2.3. Insects, Bees and Spiders

Hazardous inspects and spiders include:

- Mosquitoes: Rain and flooding may lead to increased numbers of mosquitoes, which can carry diseases such as West Nile virus or dengue fever.
- Bee stings: If you receive multiple stings seek help immediately. Watch for signs of allergic reaction to stings, which typically happen within the first few hours.
- Spiders: The black widow and brown recluse are poisonous spiders that hide behind objects and in rubble piles. Their bites can be severe, causing pain, nausea, fever, and breathing difficulty.
- Deer ticks: Deer ticks can transmit Lyme disease, which can cause lingering health effects. Symptoms may (but don’t always) include a bull’s-eye shaped rash around the bite and flu-like symptoms.
- Fire ants: Fire ants live in mounded nests and attack in swarms. Their painful bites can lead to secondary infections, anaphylactic shock, and even death.

Protective Measures include:

- Wear long pants, long sleeves, and socks. Tuck pants into boots or socks to provide an insect barrier.
- Use insect repellents containing DEET or Picaridin.
- Be alert when working around abandoned buildings or debris.
- Wear work gloves, and stay on the lookout for spiders.
- Seek medical attention if bitten by a poisonous spider or deer tick or if you experience severe symptoms.
- Avoid scented soaps and perfumes.
- Don't leave food, drinks, and garbage out uncovered.

5.3. Ergonomic Hazard Mitigation Measures and Procedures

The following sections provide potential ergonomic hazards and how to mitigate these concerns.

5.3.1. Avoiding Lifting Injuries

Back injuries often result from lifting objects that are too heavy or from using the wrong lifting technique. Keep your back healthy and pain-free by following common sense safety precautions.

- Minimize reaching by keeping frequently used items within arm's reach, moving your whole body as close as possible to the object.
- Avoid overextending by standing up when retrieving objects on shelves.
- Keep your back in shape with regular stretching exercises.
- Get help from a coworker or use a hand truck if the load is too heavy or bulky to lift alone.

5.3.2. Proper Lifting Techniques

- Face the load; don't twist your body. Stand in a wide stance with your feet close to the object.
- Bend at the knees, keeping your back straight. Wrap your arms around the object.
- Let your legs do the lifting!
- Hold the object close to your body as you stand up straight. To set the load down, bend at the knees, not from the waist.

5.4. Engineering Controls

- Trench shoring (1:1 slope for Type B Soils)
- Location work spaces upwind/wind direction monitoring
- Stockpiled soil will be covered as conditions warrant
- Site controls will be implemented to restrict access to the Site from the general public

5.5. Chemical Hazards

CHEMICAL HAZARDS AND EXPOSURES (POTENTIALLY PRESENT AT SITE)

Compound/ Description	Exposure Limits/IDLH	Exposure Routes	Symptoms/Health Effects
Diesel Fuel — liquid with a characteristic odor	None established by OSHA, but ACGIH has adopted 100 mg/m^3 for a TWA (as total hydrocarbons)	Ingestion, inhalation, skin absorption, skin and eye contact	Irritated eyes, skin, and mucous membrane; fatigue; blurred vision; dizziness; slurred speech; confusion; convulsions; headache; dermatitis
Polycyclic aromatic hydrocarbons (PAH) as coal tar pitch volatiles	PEL 0.2 mg/m^3 TLV 0.2 mg/m^3 REL 0.1 mg/m^3 IDLH 80 mg/m^3	Inhalation, ingestion, skin and/or eye contact	Dermatitis, bronchitis, potential carcinogen

Compound/ Description	Exposure Limits/IDLH	Exposure Routes	Symptoms/Health Effects
PCBs (as Aroclor 1254)—colorless to pale-yellow viscous liquid with a mild, hydrocarbon odor	PEL 0.5 mg/m^3 TLV 0.5 mg/m^3 REL 0.001 mg/m^3 IDLH 5.0 mg/m^3	Inhalation (dusts or mists), skin absorption, ingestion, skin and/or eye contact	Irritated eyes, chloracne, liver damage, reproductive effects, potential carcinogen
Benzene	OSHA PEL 1 ppm Short term: 5 ppm ACGIH PEL 0.5 ppm	Inhalation, skin absorption, ingestion, skin and/or eye contact	Irritated eyes, skin, nose, respiratory system; dizziness; headache, nausea, staggered gait; anorexia, lassitude (weakness, exhaustion); dermatitis; bone marrow depression; [potential occupational carcinogen]
Xylene (m, p, o)	OSHA PEL 100 ppm NIOSH REL 100 ppm Short term: 150 ppm	Inhalation, skin absorption, ingestion, skin and/or eye contact	Irritation eyes, skin, nose, throat; dizziness, excitement, drowsiness, incoordination, staggering gait; corneal vacuolization; anorexia, nausea, vomiting, abdominal pain; dermatitis
Trimethylbenzene (1,2,4 and 1,3,5)	NIOSH REL 25 ppm	Inhalation, skin absorption, ingestion, skin and/or eye contact	Irritation eyes, skin, nose, throat, respiratory system; bronchitis; hypochromic anemia; headache, drowsiness, lassitude (weakness, exhaustion), dizziness, nausea, incoordination; vomiting, confusion; chemical pneumonitis (aspiration liquid)
Trichloroethene	OSHA PEL 100 ppm	Inhalation, skin absorption, ingestion, skin and/or eye contact	Irritation eyes, skin; headache, visual disturbance, lassitude (weakness, exhaustion), dizziness, tremor, drowsiness, nausea, vomiting; dermatitis; cardiac arrhythmias, paresthesia; liver injury; [potential occupational carcinogen]
p-Nitroaniline	OSHA PEL 1 ppm NIOSH REL 3 mg/m^3	Inhalation, skin absorption, ingestion, skin	irritation nose, throat; cyanosis, ataxia; tachycardia, tachypnea; dyspnea (breathing difficulty); irritability; vomiting, diarrhea; convulsions; resp arrest; anemia; methemoglobinemia; jaundice
Dinitro-o-cresol	OSHA PEL 0.2 mg/m^3 NIOSH REL 0.2 mg/m^3	Inhalation, skin absorption, ingestion, skin	Sense of well-being; headache, fever, lassitude (weakness, exhaustion), profuse sweating, excess thirst, tachycardia, hyperpnea, cough, short breath, coma

Compound/ Description	Exposure Limits/IDLH	Exposure Routes	Symptoms/Health Effects
Antimony	NIOSH REL: TWA 0.5 mg/m^3 OSHA PEL: TWA 0.5 mg/m^3	Inhalation, skin absorption, ingestion, skin and/or eye contact	Irritation eyes, skin, nose, throat, mouth; cough; dizziness; headache; nausea, vomiting, diarrhea; stomach cramps; insomnia; anorexia; unable to smell properly
Arsenic	NIOSH REL: 0.002 mg/m^3 (15-minute) OSHA PEL: TWA 0.010 mg/m^3	Inhalation, skin absorption, ingestion, skin and/or eye contact	Ulceration of nasal septum, dermatitis, gastrointestinal disturbances, peripheral neuropathy, resp irritation, hyperpigmentation of skin, [potential occupational carcinogen]
Barium Chloride (as Ba)	NIOSH REL: TWA 0.5 mg/m^3 OSHA PEL: TWA 0.5 mg/m^3 Also applies to other soluble barium compounds (as Ba) except Barium sulfate.	Inhalation, ingestion, skin and/or eye contact	Irritation eyes, skin, upper respiratory system; skin burns; gastroenteritis; muscle spasm; slow pulse, extrasystoles; hypokalemia
Beryllium & beryllium compounds (as Be)	NIOSH REL: 0.0005 mg/m^3 OSHA PEL: TWA 0.002 mg/m^3 C 0.005 mg/m^3 (30 minutes), with a maximum peak of 0.025 mg/m^3	Inhalation, skin and/or eye contact	Berylliosis (chronic exposure): anorexia, weight loss, lassitude (weakness, exhaustion), chest pain, cough, clubbing of fingers, cyanosis, pulmonary insufficiency; irritation eyes; dermatitis; [potential occupational carcinogen]
Cobalt metal dust and fume (as Co)	NIOSH REL: TWA 0.05 mg/m^3 OSHA PEL: TWA 0.1 mg/m^3	Inhalation, ingestion, skin and/or eye contact	Cough, dyspnea (breathing difficulty), wheezing, decreased pulmonary function; weight loss; dermatitis; diffuse nodular fibrosis; resp hypersensitivity, asthma
Iron oxide dust and fume (as fe)	NIOSH REL: TWA 5 mg/m^3 OSHA PEL: TWA 10 mg/m^3	Inhalation	Benign pneumoconiosis with X-ray shadows indistinguishable from fibrotic pneumoconiosis (siderosis)

Compound/ Description	Exposure Limits/IDLH	Exposure Routes	Symptoms/Health Effects
Lead	NIOSH REL: TWA (8-hour) 0.050 mg/m^3 OSHA PEL: TWA 0.050 mg/m^3	Inhalation, ingestion, skin and/or eye contact	lassitude (weakness, exhaustion), insomnia; facial pallor; anorexia, weight loss, malnutrition; constipation, abdominal pain, colic; anemia; gingival lead line; tremor; paralysis wrist, ankles; encephalopathy; kidney disease; irritation eyes; hypertension
Manganese Compounds	NIOSH REL: TWA 1 mg/m^3 ST 3 mg/m^3 OSHA PEL: 5 mg/m^3	Inhalation, ingestion	Manganism; asthenia, insomnia, mental confusion; metal fume fever: dry throat, cough, chest tightness, dyspnea (breathing difficulty), rales, flu-like fever; low-back pain; vomiting; malaise (vague feeling of discomfort); lassitude (weakness, exhaustion); kidney damage
Mercury Compounds	NIOSH REL: Hg Vapor: TWA 0.05 mg/m^3 Other: C 0.1 mg/m^3 [skin] OSHA PEL: TWA 0.1 mg/m^3	Inhalation, skin absorption, ingestion, skin and/or eye contact	Irritation eyes, skin; cough, chest pain, dyspnea (breathing difficulty), bronchitis, pneumonitis; tremor, insomnia, irritability, indecision, headache, lassitude (weakness, exhaustion); stomatitis, salivation; gastrointestinal disturbance, anorexia, weight loss; proteinuria

Notes:
IDLH = immediately dangerous to life or health
OSHA = Occupational Safety and Health Administration
ACGIH = American Conference of Governmental Industrial Hygienists
mg/m3 = milligrams per cubic meter
TWA = time-weighted average (Over 8 hrs.)
PEL = permissible exposure limit
TLV = threshold limit value (over 10 hrs.)
STEL = short-term exposure limit (15 min)
ppm = parts per million

5.5.1. Polycyclic Aromatic Hydrocarbons (PAHs) and Carcinogenic Polycyclic Aromatic Hydrocarbons (cPAHs)

Exposure to cPAHs can occur via inhalation of vapors, ingestion, and skin and eye contact. Skin contact can result in reddening or corrosion. Ingestion can cause nausea, vomiting, blood pressure fall, abdominal pain, convulsions and coma. Damage to the central nervous system can also occur. The U.S. Department of Health and Human Services (1989) has classified 15 PAHs compounds as having sufficient evidence for carcinogenicity, while the U.S. EPA (1990) has classified at least 5 of the identified PAHs as human carcinogens. There is no currently assigned PEL-TWA for cPAHs, but the closely related material coal tar is listed as coal tar pitch volatiles with

a PEL-TWA of 0.2 mg/m3. PAHs and cPAHs as soil contaminants can be irritating to eyes and mucous membranes. PAHs are also formed during combustion and are linked to lung cancers with exposure to combustion byproducts. Lymphatic cancers are reported in the literature with PAHs in the presence of carbon black.

5.5.2. Polychlorinated Biphenyl Compounds (PCBs)

PCB is a generic term for a range of polychlorinated biphenyl compounds used commercially in heat transfer media and in the chemical/coatings industry. PCBs have been marketed commercially under the trade names Askarel® and Aroclor®, with a designation referring to the percent weight of chlorine. Prolonged skin contact with PCBs may cause acne-like symptoms, known as chloracne. Irritation to eyes, nose and throat may also occur. Acute and chronic exposure can cause liver damage, and symptoms of edema, jaundice, anorexia, nausea, abdominal pains and fatigue. If pregnant women accidentally ingest PCBs, stillbirth or infant skin and eye problems may occur. PCBs are a suspect human carcinogen. The EPA currently classifies PCBs as a Class B2, or probable, human carcinogen. The Washington State Permissible Exposure Limit (PEL)-Time Weighted Average (TWA) for PCBs with 54 percent chlorine content is 0.5 milligrams per cubic meter (mg/m^3), while the PEL-TWA for PCBs with 42 percent chlorine is 1 mg/m^3. Skin exposure may contribute significantly to uptake of these chemicals, and therefore all skin exposure to the liquid product or contaminated water, soil or dust should be strictly avoided.

5.6. Biological Hazards

Hazard	Prevention Procedure
Poison Ivy or other vegetation	Wear work gloves and long sleeve shirt
Insects or snakes	Wear work gloves and long sleeve shirt
Used hypodermic needs or other infectious hazards	Do not pick up or contact
Others: Bird droppings	Wear hard hat, gloves and long sleeve shirt

5.7. Hazards Reporting/Documentation

Update in Daily Report. Include evaluation of:

- *Physical Hazards* (excavations and shoring, equipment, traffic, tripping, heat stress, cold stress and others)
- *Chemical Hazards* (odors, spills, free product, airborne particulates and others present)
- *Biological Hazards* (snakes, spiders, other animals, discarded needles, poison ivy, pollen, bees/wasps and others present)

6.0 AIR MONITORING PLAN

AIR MONITORING, FREQUENCY, LOCATION AND ACTION LEVELS

Contaminant	Activity	Monitoring Device	Frequency of Monitoring Breathing Zone	Action Level	Action
Organic Vapors	Environmental Remedial Actions	PID	Start of shift; prior to excavation entry; every 30 to 60 minutes and in event of odors	Background to 5 ppm in breathing zone	Use Level D or Modified Level D PPE
Organic Vapors	Environmental Remedial Actions	PID	Start of shift; prior to excavation entry; every 30 to 60 minutes and in event of odors	5 to 25 ppm in breathing zone	Upgrade to Level C PPE
Organic Vapors	Environmental Remedial Actions	PID	Start of shift; prior to excavation entry; every 30 to 60 minutes	> 25 ppm in breathing zone	Stop work and evacuate the area. Contact Health and Safety Manager for guidance.
Combustible Atmosphere	Environmental Remedial Actions	PID or 4-gas meter	Start of shift; prior to excavation entry; every 30 to 60 minutes	>10% LEL or >1,000 ppm	Stop work and evacuate the site. Contact Health and Safety Manager for guidance.
Oxygen Deficient/ Enriched Atmosphere	Environmental Remedial Actions or Confined Spaces	Oxygen meter or 4-gas meter	Start of shift; prior to excavation entry; every 30 to 60 minutes	<19.5>23.5%	Continue work if inside range. If outside range, evacuate area and contact Health and Safety Manager.

- The workspace will be monitored using a photoionization detector (PID). These instruments must be properly maintained, calibrated and charged (refer to the instrument manuals for details). Zero this meter in the same relative humidity as the area in which it will be used and allow at least a 10-minute warm-up prior to zeroing. Do not zero in a contaminated area. The PID can be tuned to read chemicals specifically if there are not multiple contaminants on-site. It can be tuned to detect one chemical with the response factor entered into the equipment, but the PID picks up all volatile organic compounds (VOCs) present. The ionization potential

(IP) of the chemical has to be less than the PID lamp (11.7 / 10.6eV), and the PID does not detect methane. The ppm readout on the instrument is relative to the IP of isobutylene (calibration gas), so conversion must be made in order to estimate ppm of the chemical on-site.

- An initial vapor measurement survey of the site should be conducted to detect "hot spots" if contaminated soil is exposed at the surface. Vapor measurement surveys of the workspace should be conducted at least hourly or more often if persistent petroleum-related odors are detected. Additionally, if vapor concentrations exceed 5 ppm above background continuously for a 5-minute period as measured in the breathing zone, upgrade to Level C personal protective equipment (PPE) or move to a noncontaminated area.
- Standard industrial hygiene/safety procedure is to require that action be taken to reduce worker exposure to organic vapors when vapor concentrations exceed one-half the TLV. Because of the variety of chemicals, the PID will not indicate exposure to a specific PEL and is therefore not a preferred tool for determining worker exposure to chemicals. If odors are detected, then employees shall upgrade to respirators with Organic Vapor cartridges and will contact the Health and Safety Program Manager for other sampling options.

7.0 SITE CONTROL PLAN

Work zones will be considered to be within the delineated construction area or within 50 feet of any active construction equipment. Employees should work upwind of the machinery if possible. To the extent practicable, use the buddy system. Do not approach heavy equipment unless you are sure the operator sees you and has indicated it is safe to approach. All personnel from GeoEngineers and subcontractor(s) should be made aware of safety features during each morning's safety tailgate meeting (drill rig shutoff switch, location of fire extinguishers, cell phone numbers etc.). For medical assistance, see Section 3.0 above.

A contamination reduction zone should be established for personnel before leaving the Facility or before breaking for lunches etc. The zone should consist of garbage bags into which used PPE should be disposed. Personnel should wash hands at the Facility before eating or leaving the Facility.

7.1. Traffic or Vehicle Access Control Plans

Traffic entering and exiting the Site will be through controlled access points. Flaggers will be used as necessary to control traffic at the controlled access points. Site personnel will be instructed to stop and look both ways before crossing any vehicle access point/roadway.

7.2. Site Work Zones

Fencing (chain link, orange construction netting, silt fence or similar), Survey Tape, Traffic Cones, Posted signage and/or barricades will be used to delineate the work zone and excluding non-site personnel from entering the work zone.

- Hot zone/exclusion zone: *Within 10 feet of any boring or open excavation*

- Contamination reduction zone: Within the Site work zone greater than 10 feet of any boring or open excavation
- Decontamination Zone : Wash stations will be set up for use by Site personnel

7.3. Buddy System

Personnel on-site should use the buddy system (pairs), particularly whenever communication is restricted. If only one GeoEngineers employee is on-site, a buddy system can be arranged with subcontractor/ contractor personnel.

7.4. Site Communication Plan

Positive communications (within sight and hearing distance or via radio) should be maintained between pairs on-site, with the pair remaining in proximity to assist each other in case of emergencies. The team should prearrange hand signals or other emergency signals for communication when voice communication becomes impaired (including cases of lack of radios or radio breakdown). In these instances, you should consider suspending work until communication can be restored. If not, the following are some examples for communication:

- Hand gripping throat: Out of air, can't breathe.
- Gripping partner's wrist or placing both hands around waist: Leave area immediately, no debate.
- Hands on top of head: Need assistance.
- Thumbs up: Okay, I'm all right: or I understand.
- Thumbs down: No, negative.

Communications between field crews is summarized in the following table:

Type of Communication	Primary Means	Back-up Means
Communications with Fire and Emergency Services	Cell Phone	Land Line
Communications with office	Radio	Cell Phone
Emergency / Drills Communications among field crew members	Radios Eye contact, hand signals (equipment operators)	Horns in machinery, Portable air horns, flashing lights

In the event of a spill or injury, the following procedures should be followed:

- Summon help and alert others in the vicinity of the release. Construction equipment will have a two-way radio to notify other Site workers of the incident.

- Evacuate immediate area and/or provide care to anyone injured. Call 9-1-1 and follow the emergency procedures specified in Section 4.0. Note that a land based telephone line may be required if cell phone coverage is determined to be unreliable. A land line telephone is located in the main construction trailer.
- If potential fire or explosion hazards exist initiate evacuation procedures. Call 9-1-1.
- Respond defensively to any uncontrolled spill.
- Use appropriate personal protective equipment when responding to any spill, as described in the HASP.
- Protect drains and/or surface water (river) by use of absorbent, booms and/or drain covers.
- Notify the on-Site safety coordinator and the EPA On-Scene Coordinator.
- Notify other trained staff to assist with the spill response and cleanup activities.
- Coordinate response activities with local emergency personnel (fire department), if necessary.
- Notify appropriate agency if a release has entered the environment. Refer to the Contingency Plan included as Appendix E of the Work Plan.

Spill response and prevention activities for Site work are presented in the Contingency Action Plan included at Appendix E of the Work Plan. Contact information for Site personnel are presented in the following table:

Contact Name	Organization/Role	Telephone Numbers
Earl Liverman	EPA On-Scene Coordinator	Office: 208.664.4858
Terrance Cundy	Potlatch Project Manger	Office: 208.883.1668 Cell: 208.301.0410
Brandon Miller	Potlatch St Joe District Forester	Office: 208.245.6436 Cell: 208.874.7588
Wilbur Clark	Pacific Pile & Marine, L.P. Project Manager	Office: 206-331-3873 Cell: 206-300-1312
Craig Cearley	Pacific Pile & Marine, L.P. Superintendent	Cell: 206-909-1798
John Herzog	GeoEngineers Technical Project Manager	Office: 206-239-3252 Cell: 206-406-6431
Robert Trahan	GeoEngineers Field Coordinator	Office: 206-239-3253 Cell: 206-240-2300
Abhijit Joshi	GeoEngineers Site Engineer	Office: 206-239-3256 Cell: 425-223-9028
Paul Robinette	GeoEngineers Site Engineer	Office: 253-383-4940 Cell: 253-278-0273

7.5. Decontamination Procedures

Decontamination consists of removing outer protective Tyvek clothing and washing soiled boots and gloves using bucket and brush provided on-site in the contamination reduction zone. Inner gloves will then be removed, and respirator, hands and face will be washed in either a portable wash station or a bathroom facility in the support zone. Employees will perform decontamination procedures and wash prior to eating, drinking or leaving the site.

7.6. Waste Disposal or Storage

Used PPE to be placed in trash containers. Drill cuttings will be placed in on-site drums pending characterization and disposal.

8.0 PERSONAL PROTECTIVE EQUIPMENT

After the initial and/or daily hazard assessment has been completed the appropriate protective personal protective equipment (PPE) will be selected to ensure worker safety. Task-specific levels of PPE shall be reviewed with field personnel during the pre-work briefing conducted prior to the start of site operations. Task-specific levels of PPE shall be reviewed with field personnel during the pre-work briefing conducted prior to the start of site operations.

Site activities may include handling and sampling solid subsurface material (material may potentially be saturated with groundwater). Depth-to-groundwater measurements may be performed as well. Site hazards include potential exposure to hazardous materials, and physical hazards such as trips/falls, heavy equipment, and exposure.

Air monitoring will be conducted to determine the level of respiratory protection.

- Half-face combination organic vapor/high efficiency particulate air (HEPA) or P100 cartridge respirators will be available on-site to be used as necessary. P100 cartridges are to be used only if PID measurements are below the site action limit. P100 cartridges are used for protection against dust, metals and asbestos, while the combination organic vapor/HEPA cartridges are protective against both dust and vapor. Ensure that the PID or TLV will detect the chemicals of concern on-site.
- Level D PPE unless a higher level of protection is required will be worn at all times on the site. Potentially exposed personnel will wash gloves, hands, face and other pertinent items to prevent hand-to-mouth contact. This will be done prior to hand-to-mouth activities including eating, smoking, etc.
- Adequate personnel and equipment decontamination will be used to decrease potential ingestion and inhalation.

Check applicable personal protection gear to be used:

__X__ Hardhat
__X__ Steel-toed boots (if crushing hazards are a potential or if client requests)
__X__ Safety glasses (if dust, particles, or other hazards are present or client requests)
__X__ Hearing protection (if it is difficult to carry on a conversation 3 feet away)
__X__ Rubber boots (if wet conditions)

Gloves (specify):

__X__ Nitrile
_____ Latex
_____ Liners
_____ Leather
_____ Other (specify) _____

Protective clothing:

_____ Tyvek
_____ Saranex (personnel shall use Saranex if liquids are handled or splash may be an issue)
__X__ Cotton
__X__ Rain gear (as needed)
__X__ Layered warm clothing (as needed)

Inhalation hazard protection:

__X__ Level D
_____ Level C (respirators with organic vapor filters/ P100 filters)

8.1. Personal Protective Equipment Inspections

PPE clothing ensembles designated for use during site activities shall be selected to provide protection against known or anticipated hazards. However, no protective garment, glove or boot is entirely chemical-resistant, nor does any PPE provide protection against all types of hazards. To obtain optimum performance from PPE, site personnel shall be trained in the proper use and inspection of PPE. This training shall include the following:

- Inspect PPE before and during use for imperfect seams, non-uniform coatings, tears, poorly functioning closures or other defects. If the integrity of the PPE is compromised in any manner, proceed to the contamination reduction zone and replace the PPE.
- Inspect PPE during use for visible signs of chemical permeation such as swelling, discoloration, stiffness, brittleness, cracks, tears or other signs of punctures. If the integrity of the PPE is compromised in any manner, proceed to the contamination reduction zone and replace the PPE.
- Disposable PPE should not be reused after breaks unless it has been properly decontaminated.

8.2. Respirator Selection, Use and Maintenance

If respirators are required, Site personnel shall be trained before use on the proper use, maintenance and limitations of respirators. Additionally, they must be medically qualified to wear a respiratory protection in accordance with 29 CFR 1910.134. Site personnel who will use a tight-fitting respirator must have passed a qualitative or quantitative fit test conducted in accordance with an OSHA-accepted fit test protocol. Fit testing must be repeated annually or whenever a new type of respirator is used. Respirators will be stored in a protective container.

8.3. Respirator Cartridges

If Site personnel are required to wear air-purifying respirators, the appropriate cartridges shall be selected to protect personnel from known or anticipated site contaminants. The respirator/cartridge combination shall be certified and approved by the National Institute for Occupational Safety and Health (NIOSH). A cartridge change-out schedule shall be developed based on known site contaminants, anticipated contaminant concentrations and data supplied by the cartridge manufacturer related to the absorption capacity of the cartridge for specific contaminants. Site personnel shall be made aware of the cartridge change-out schedule prior to the initiation of site activities. Site personnel shall also be instructed to change respirator cartridges if they detect increased resistance during inhalation or detect vapor breakthrough by smell, taste or feel, although breakthrough is not an acceptable method of determining the change-out schedule.

8.4. Respirator Inspection and Cleaning

Site personnel shall inspect respirators prior to each use in accordance with the manufacturer's instructions. In addition, site personnel wearing a tight-fitting respirator shall perform a positive and negative pressure user seal check each time the respirator is donned, to ensure proper fit and function. User seal checks shall be performed in accordance with the GeoEngineers respiratory protection program or the respirator manufacturer's instructions.

9.0 ADDITIONAL ELEMENTS

9.1. Cold Stress Prevention

Working in cold environments presents many hazards to site personnel and can result in frost nip (superficial freezing of the skin), frost bite (deep tissue freezing), or hypothermia (lowering of the core body temperature).

The combination of wind and cold temperatures increases the degree of cold stress experienced by site personnel. Site personnel shall be trained on the signs and symptoms of cold-related illnesses, how the human body adapts to cold environments, and how to prevent the onset of cold-related illnesses. Heated break areas and warm beverages shall be provided during periods of cold weather.

9.2. Heat Stress Prevention

State and federal OSHA regulations provide specific requirements for handling employee exposure to heat stress. GeoEngineers' program complies with these requirements and will be implemented in all areas where heat stress is identified as a potential health issue.

General requirements for preventing heat stress apply to outdoor work environments from May 1 through September 30, annually, only when employees are exposed to outdoor heat at or above an applicable temperature listed in the following table. To determine which temperature applies to each worksite, select the temperature associated with the general type of clothing or personal protective equipment (PPE) each employee is required to wear.

Keeping workers hydrated in a hot outdoor environment requires that more water be provided than at other times of the year. GeoEngineers is prepared to supply at least one quart of drinking water per employee per hour. When employee exposure is at or above an applicable temperature listed in the following table, the Project Manager shall ensure that:

- A sufficient quantity of drinking water is readily accessible to employees at all times; and
- All employees have the opportunity to drink at least one quart of drinking water per hour.

HEAT STRESS PREVENTION

Type of Clothing	Outdoor Temperature Action Levels (Degrees Fahrenheit)
Non-breathing clothes including vapor barrier clothing or PPE such as chemical resistant suits	52°
Double-layer woven clothes including coveralls, jackets and sweatshirts	77°
All other clothing	89°

9.3. Emergency Response

- Personnel on-site should use the "buddy system" (pairs).
- Visual contact should be maintained between "pairs" on-site, with the team remaining in proximity to assist each other in case of emergencies.
- If any member of the field crew experiences any adverse exposure symptoms while on-site, the entire field crew should immediately halt work and act according to the instructions provided by the Site Safety and Health Supervisor.
- Wind indicators visible to all on-site personnel should be provided by the Site Safety and Health Supervisor to indicate possible routes for upwind escape. Alternatively, the Site Safety and Health Supervisor may ask on-site personnel to observe the wind direction periodically during site activities.
- The discovery of any condition that would suggest the existence of a situation more hazardous than anticipated should result in the evacuation of the field team, contact of the PM, and reevaluation of the hazard and the level of protection required.

- If an accident occurs, the Site Safety and Health Supervisor and the injured person are to complete, within 24 hours, an Accident Report for submittal to the PM, the Health and Safety Program Manager and Human Resources. The PM should ensure that follow-up action is taken to correct the situation that caused the accident or exposure.

10.0 MISCELLANEOUS

10.1. Personnel Medical Surveillance

GeoEngineers employees are not in a medical surveillance program because they do not fall into the category of "Employees Covered" in OSHA 1910.120(f)(2), which states a medical surveillance program is required for the following employees:

1. All employees who are or may be exposed to hazardous substances or health hazards at or above the permissible exposure limits or, if there is no permissible exposure limit, above the published exposure levels for these substances, without regard to the use of respirators, for 30 days or more a year;
2. All employees who wear a respirator for 30 days or more a year or as required by state and federal regulations;
3. All employees who are injured, become ill or develop signs or symptoms due to possible overexposure involving hazardous substances or health hazards from an emergency response or hazardous waste operation; and
4. Members of HAZMAT teams.

10.2. Spill Containment Plans (Drum and Container Handling)

Contractors or subcontractors will be responsible for developing and implanting Spill Prevention and Containment Plans for use during Site work.

10.3. Sampling, Managing and Handling Drums and Containers

Drums and containers used during the cleanup shall meet the appropriate Department of Transportation (DOT), OSHA and U.S. Environmental Protection Agency (EPA) regulations for the waste that they contain. Site operations shall be organized to minimize the amount of drum or container movement. When practicable, drums and containers shall be inspected and their integrity shall be ensured before they are moved. Unlabeled drums and containers shall be considered to contain hazardous substances and handled accordingly until the contents are positively identified and labeled. Before drums or containers are moved, all employees involved in the transfer operation shall be warned of the potential hazards associated with the contents.

Drums or containers and suitable quantities of proper absorbent shall be kept available and used where spills, leaks or rupture may occur. Where major spills may occur, a spill containment program shall be implemented to contain and isolate the entire volume of the hazardous substance being transferred. Fire extinguishing equipment shall be on hand and ready for use to control incipient fires.

10.4. Entry Procedures for Tanks or Vaults (Confined Spaces)

GeoEngineers employees shall not enter confined spaces to perform work unless they have been properly trained and with hands-on experience in the use of retrieval equipment. If a project requires confined space entry, please include a copy of the confined space permit and include the training documentation in this HASP.

Trenches greater than 4 feet in depth with the potential for buildup of a hazardous atmosphere are considered confined spaces.

10.5. Sanitation

Washrooms will be available for use during Site work.

10.6. Lighting

Site activities will be conducted during daylight hours. Artificial lighting will be used as necessary if work is conducted after daylight hours.

10.7. Excavation, Trenching and Shoring

All employees working on project sites where there is an excavation greater than 4 feet in depth shall be trained in excavation safety and shall utilize safe procedures. OSHA designates a 5-foot depth for instituting excavation safety procedures; however GeoEngineers will use the more conservative depth of 4 feet as specified by states such as Washington, Oregon and California. This program is for the protection of employees while working in excavations; however, employees should not enter excavations if there is an alternative.

GeoEngineers employees often do not have stop work authority on projects controlled by other contractors. However, any GeoEngineers employee, regardless of job title, working in the field will be responsible for contacting the Project Manager if they observe practices on the job site that are serious safety violations that are not under their control. They will document the unsafe practices and will contact the site safety coordinator as identified by the client. If no one is on-site, the Project Manager, once notified, will contact the client. This action establishes GeoEngineers' commitment to site health and safety on all job sites as our duty of care to the public, contractors and clients.

GeoEngineers is responsible for its subcontractors and will also be providing inspections and corrections of any work that subcontractors perform around excavations.

11.0 DOCUMENTATION TO BE COMPLETED FOR HAZWOPER PROJECTS

The following forms are required for Hazardous Waste Operations and Emergency Response (HAZWOPER) projects:

- Field Log
- Health and Safety Plan acknowledgment by GeoEngineers employees (Form C-2)
- Contractors Health and Safety Plan Disclaimer (Form C-3)

- Conditional forms available at GeoEngineers office: Accident Report

The Field Report is to contain the following information:

- Updates on hazard assessments, field decisions, conversations with subcontractors, client or other parties, etc.;
- Air monitoring/calibration results, including: personnel, locations monitored, activity at the time of monitoring, etc.;
- Actions taken;
- Action level for upgrading PPE and rationale; and
- Meteorological conditions (temperature, wind direction, wind speed, humidity, rain, snow, etc.).

12.0 LIMITATIONS

Any electronic form, facsimile or hard copy of the original document (email, text, table, and/or figure), if provided, and any attachments are only a copy of the original document. The original document is stored by GeoEngineers, Inc. and will serve as the official document of record.

13.0 REFERENCES

E & E (Ecology and Environment, Inc.), "Draft Final Engineering Evaluation /Cost Analysis, Avery Landing Site, Avery, Idaho," prepared for the United States Environmental Protection Agency, Region 10, dated December 2010.

GeoEngineers, Inc., "Draft Removal Action Work Plan, Avery Landing Site, Avery, Idaho" GEI File No. 2315-016-02, prepared for United States Environmental Protection Agency on Behalf of the Potlatch Corporation, dated May 10, 2013.

GeoEngineers, Inc., "Supplemental Site Investigation, Avery Landing Site, Avery, Idaho," GEI File No. 2315-016-01, prepared for Potlatch Forest Holdings, Inc., dated November 9, 2011.

Golder Associates, Inc., (Golder), "Final Engineering Evaluation /Cost Analysis Work Plan for the Avery Landing Site, Avery, Idaho," prepared for the Potlatch Forest Products Corporation, dated January 23, 2009.

FORM C-1
HEALTH AND SAFETY PRE-ENTRY BRIEFING
AVERY LANDING REMOVAL ACTION
FILE NO. 2315-016-02

Inform employees, contractors and subcontractors or their representatives about:

- The nature, level and degree of exposure to hazardous substances they're likely to encounter;
- All site-related emergency response procedures; and
- Any identified potential fire, explosion, health, safety or other hazards.

Conduct briefings for employees, contractors and subcontractors, or their representatives as follows:

- A pre-entry briefing before any site activity is started; and
- Additional briefings, as needed, to make sure that the Site-specific HASP is followed.

Make sure all employees working on the Site are informed of any risks identified and trained on how to protect themselves and other workers against the Site hazards and risks

Update all information to reflect current sight activities and hazards.

All personnel participating in this project must receive initial health and safety orientation. Thereafter, brief tailgate safety meetings will be held as deemed necessary by the Site Safety and Health Supervisor.

The orientation and the tailgate safety meetings shall include a discussion of emergency response, Site communications and site hazards.

Company Employee

Date	Topics	Attendee	Name	Initials

FORM C-2
SITE SAFETY PLAN – GEOENGINEERS' EMPLOYEE ACKNOWLEDGMENT
Avery Landing Removal Action
File No. 2315-016-02

All GeoEngineers' Site workers shall complete this form, which should remain attached to the Safety Plan and filed with other project documentation.

I hereby verify that a copy of the current Safety Plan has been provided by GeoEngineers, Inc., for my review and personal use. I have read the document completely and acknowledge an understanding of the safety procedures and protocol for my responsibilities on Site. I agree to comply with all required, specified safety regulations and procedures.

Print Name	Signature	Date

FORM C-3
SUBCONTRACTOR AND SITE VISITOR SITE SAFETY FORM
AVERY LANDING REMOVAL ACTION
FILE NO. 2315-016-02

I verify that a copy of the current Site Safety Plan has been provided by GeoEngineers, Inc. to inform me of the hazardous substances on Site and to provide safety procedures and protocols that will be used by GeoEngineers' staff at the Site. By signing below, I agree that the safety of my employees is the responsibility of the undersigned company.

Print Name	Signature	Firm	Date

ATTACHMENT D-3

Pacific Pile and Marine Health and Safety Plan

700 South Riverside Drive
Seattle, WA 98108
Phone: 206 331 3873
Fax: 206 774 5958

HEALTH AND SAFETY PLAN (HASP)
AVERY LANDING CLEANUP
AVERY, ID
Contract NO: 13-010

March 29, 2013

Prepared by:

_____

Wilbur J. Clark, Project Manager
206 300 1312

Approved by:

Concurrence:

Certificate of Receipt and Compliance

I certify that I have received a copy of the Pacific Pile & Marine Employee Rules and Accident Prevention Plan. I understand that this book contains work rules and other mandatory procedures and programs related to health and safety. By signing this certificate, I accept full responsibility for reading and understanding the contents, and I furthermore agree to comply with all aspects of the contents.

If I do not understand any part of these materials, I agree to ask my supervisor for an explanation.

I further understand that if I fail to comply with the requirements contained in these materials, I will be subject to enforcement measures including suspension or termination of my employment with Pacific Pile & Marine.

Signature	Printed Name	Date
Signature	Printed Name	Date
Signature	Printed Name	Date
Signature	Printed Name	Date
Signature	Printed Name	Date
Signature	Printed Name	Date
Signature	Printed Name	Date
Signature	Printed Name	Date
Signature	Printed Name	Date

Quick Guide

EMERGENCY SERVICES

If an emergency incident (such as fire, serious injury, poisoning, or chemical release that threatens human health) occurs at a work location, the task leader or senior employee at that location is responsible for initiating emergency response by contacting the applicable entities below. After emergency services have been contacted and are en route, the individual who contacted the emergency response entity will then notify GeoEngineers' Project Manager who will manage subsequent notifications to and communications with Potlatch Corporation.

Event Contact	Telephone Number
Medical or Fire Emergency.	**9-1-1**
Ambulance Emergency/Station	9-1-1
Hospital: Benewah Community Hospital 229 South 7th Street, St. Maries, ID 83861	(208) 245-5551
Clinic: St, Maries Family Medicine 229 South 8th Street, St. Maries, Idaho 83861	(208) 245-2591
24/7 WorkCare Case management services for non-emergency medical incidents	888-449-7787
St. Maries Fire District	(208) 245-4512 (208) 245-5253
St. Maries Police Department	(208) 245-5102
Poison Control Center	800 876 4766
Federal/Government Contacts	
Environmental Protection Agency (EPA) Hotline	800 621 8431
National Institute of Occupational Safety and Health (NIOSH) Hotline	800 356 4674
Occupational Safety and Health Administration (OSHA)	202 219 8148
OSHA Hotline	800 321 6742
National Response Center (report spills and chemical releases)	800 424 8802
CHEMTREC (for hazardous materials spills)	800 262 8200
ChemTel (for hazardous materials information)	800 255 3924
Department of Transportation (DOT) Safety Administration	888 327 4236

EMERGENCY CONTACT LIST

In the event of an emergency: Fire, Explosions, Spill or Release, Injury or illness, contact the following personnel:

Contact Name	Responsibility	Telephone Numbers
Wilbur Clark	Pacific Pile & Marine, L.P. Project Manager	Office: 206-331-3873 Cell: 206-300-1312
Craig Cearley	Pacific Pile & Marine, L.P. Superintendent	Cell: 206-909-1798
John Herzog	GeoEngineers Technical Project Manager	Office: 206-239-3252 Cell: 206-406-6431
Robert Trahan	GeoEngineers Field Coordinator	Office: 206-239-3253 Cell: 206-240-2300
Abhijit Joshi	GeoEngineers Site Engineer	Office: 206-239-3256 Cell: 425-223-9028
Paul Robinette	GeoEngineers Site Engineer	Office: 253-383-4940 Cell: 253-278-0273

Quick Guide

HOSPITAL LOCATION MAP

For medical emergencies at the Kenai project, the ***primary*** location for medical aid should be the **Benewah Community Hospital in St Maries**.

Directions from the Site are:

- Start by going **west** on **Milwaukee Rd-Trail/NF-50/St Joe River Rd** toward **ID-3 S** (45.0 Mi)
- Turn **left** on **ID-3 S** highway and proceed south towards Avery. (0.6 miles).
- Turn **right** onto **College Ave**. (0.2 miles)
- Turn **left** onto **S 8th ST** (102 ft) and pull into EMERGENCY AREA.
- You have arrived at destination

Map to Benewah Community Hospital: 229 South 7th Street, St. Maries, ID 83861 (208) 245-5551

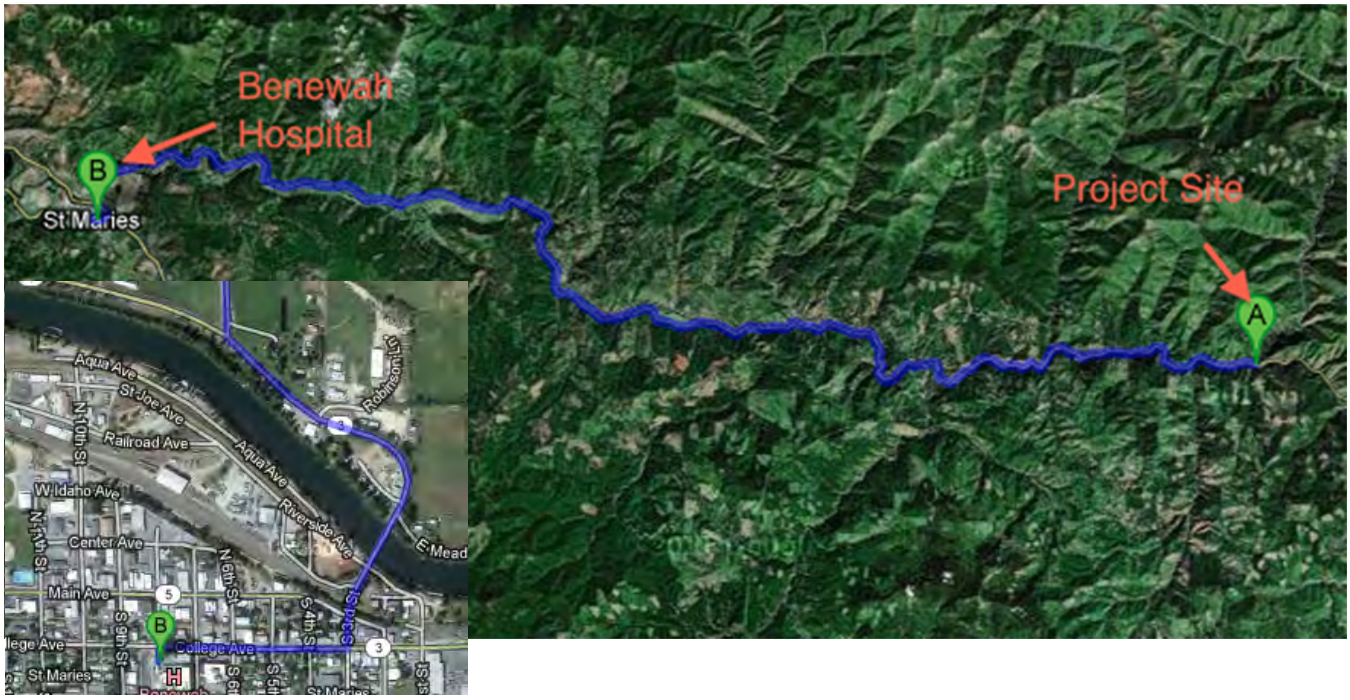

Quick Guide

CLINIC LOCATION MAP

For non-emergency medical injuries at the Avery Landing project, the ***Secondary*** location for medical aid should be the **St. Maries Family Medicine in St Maries, ID**

Directions from the Site are:

- Start by going **west** on **Milwaukee Rd-Trail/NF-50/St Joe River Rd** toward **ID-3 S** (45.0 Mi)
- Turn **left** on **ID-3 S** highway and proceed south towards Avery. (0.6 miles).
- Turn **right** onto **College Ave**. (0.2 miles)
- Turn **left** onto **S 8th ST** (102 ft)

<u>Map to St. Maries Family Medicine</u>: 229 South 8th Street, St. Maries, Idaho
Phone: (208) 245-2591

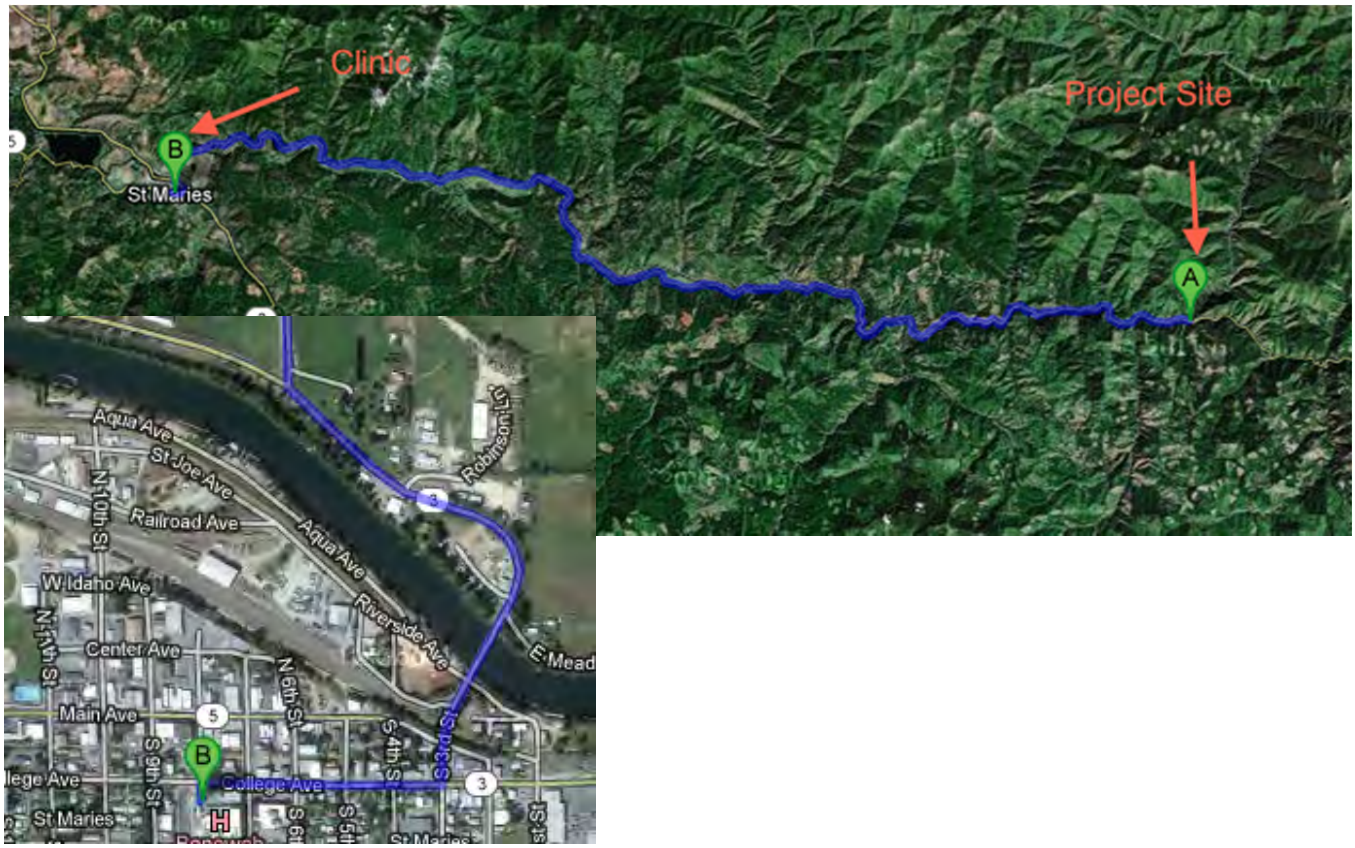

Quick Guide

1.0 JOBSITE TASKS

- Mobilization/demobilization
- Installation of erosion control measures
- Maintenance of haul roads
- Demarcation of work control areas
- Excavation, hauling and stockpiling of clean overburden
- Excavation, hauling and stockpiling of contaminated soil
- Loading and hauling of contaminated soil
- Placement of backfill and rip rap material

2.0 HAZARDS

CHEMICAL HAZARDS

The chemical hazards associated with this project include:

- Petroleum hydrocarbons from releases of diesel, gasoline, and bunker fuels when the rail yard and switch was demolished.
- Low levels of lead from historic sources during the rail yard and switch operations.

PHYSICAL HAZARDS

Physical hazards associated with this project include:

- Hazards to ground personnel working around heavy equipment and dumping trucks.
- Motor vehicle collisions and haul truck accidents.
- Falls to same level while working around uneven surfaces, on rock, and working on slopes.
- Falls from heights from heavy equipment and working near slopes and excavations.
- Steep drop-offs at edge of haul roads.
- Hand injuries during manual handling of materials.
- Drowning hazards while working near water.

ENVIRONMENTAL/BIOLOGICAL HAZARDS

- Allergic reactions to stings and bites from insects.
- Diseases exposure from wood tick and misquote bites.

3.0 PPE

The minimum PPE to enter the site is listed below. However, refer to the task-specific Job Loss Analysis (JLA) for required PPE:

- Hard hat (at any time outdoors or indoors if overhead hazards exist)
- Safety glasses with side shields
- High visibility vest, shirt, or coat
- Safety-toe work boots (leather or neoprene)
- Work gloves for manual tasks and material handling – high visibility
- Hearing protection for work in or near machinery and high decibel activities

Site visitors are required to wear yellow hardhats, safety glasses with side shields, high visibility vests, shirt, or coat, and safety-toe shoes.

Additional PPE requirements including face shields, chemical resistant gloves, tyvek coveralls and respiratory protection shall be based on risk assessment of tasks and included in the PPE section of the HASP and JLAs (e.g. working in wet contaminated areas, conducting torch work, etc.).

4.0 MONITORING

Monitoring and personal sampling may be conducted for organic vapors (petroleum hydrocarbons) when working around petroleum impacted soils. Please refer to paragraph 7, Page 21 for details.

Table of Contents

1.0 Statement of Safety and Health Policy 1
2.0 HASP Purpose and Objectives 1
2.1 Related Health and Safety Documents 1
2.2 Incident Free Performance of Work 1
2.3 Stop Work Authority and Tenets of Operational Excellence 2
2.4 Behavior Based Safety 2
2.5 Management of Change 3
3.0 Site Description and Scope of Work 3
3.1 Project / Site History 3
3.2 Site Location 3
3.3 Scope of Work 3
4.0 Site Emergency Response Plans 4
4.1 Reporting Incidents 4
4.1 Incident Procedures 5
4.2 Medical Support Plan 6
4.3 Communications 6
4.4 Non-emergency Medical Incidents 7
4.5 Return to Work 7
4.6 Drills and Exercises 7
4.7 Evacuation 8
4.8 Emergency Situations and Response Actions 8
4.9 Off-Site Emergency 10
4.10 Spill Plan 10
4.10.1 Spill Prevention 10
4.10.2 Spill Response 10
4.11 Fire Prevention Plan 11
4.12 Fire Fighting Plan 12
4.13 Posting of Emergency Information 12
4.14 Near Miss Reporting 12
4.15 Incident Investigation 12
5.0 Project Team Organization and Responsibilities 12
5.1 PPM Organizational Chart 12

5.2 Responsibilities and Lines of Authority 14
5.3 Competent Persons 14
5.4 Competent Person Requirements 14
5.5 Buddy System 14
5.7 Professional Conduct 15
6.0 Training, Medical Monitoring and Meeting Requirements 15
6.1 Training Requirements 15
6.2 Orientation Training 16
6.3 Requirements for Emergency Response Training 17
6.4 Short Service Employees 17
6.5 Safety Meetings & Inspections 17
6.5.1 Daily Safety Meetings (Tailgate) 17
6.5.2 Weekly Safety Meetings 18
6.5.3 Walk-Around Safety Inspections 18
6.6 Physical Qualifications 18
6.6.1 Fitness for Duty and Personal Qualifications 18
6.6.2 Drugs and Alcohol 19
6.6.3 Medical Surveillance Requirements 19
7.0 Air (Area) and Personal Monitoring, Environmental Sampling, and Dust Control 19
7.1 Real-Time Air Monitoring 19
7.2 VOC Air Monitoring Action Levels 20
7.3 Personnel Air Monitoring 21
8.0 Personal Protective Equipment 21
9.0 Site Hazard Analysis Process 23
9.1 Loss Prevention Self-Assessment (LPSA) 23
9.2 Job Loss Analysis (JLAs) 23
10.0 Site Hazards 23
10.1 Contaminants of Concern and Regulatory Exposure Levels 23
10.2 Analysis of Key Chemical Hazards 24
10.3 Analysis of Key Physical Hazards 24
10.4 Analysis of Key Environmental/Biological Hazards 27
10.5 Chemicals to be Brought on Site 28
11.0 Decontamination Procedures 28
11.1 Decontamination Facilities and Equipment 28

11.2 Personnel Decontamination 29
11.3 Equipment Decontamination 29
11.4 Disposition of Decontamination Wastes 29
11.5 Effectiveness of Decontamination 29
12.0 Waste Management 29
12.1 Solid Waste 29
12.2 Liquid Waste 30
13.0 Site and Traffic Control 30
13.1 Site Control Measures 30
13.1.1 Site Map 30
13.1.2 Lone Worker Safety Procedures 30
13.1.4 Work Zone Access 30
14.0 Other Safety Plans 31
14.1 Heat/Cold Stress Monitoring Plan 31
14.1.1 Heat Monitoring Plan 31
14.1.2 Cold Monitoring Plan 32
14.2 Critical Lift Plan 34
14.3 Contingency Plan for Severe Weather 34
14.4 Site Specific Fall Protection and Prevention Plan 35
14.5 Excavation/Trenching Plan 35
14.6 Hearing Conservation 36
14.7 Bloodborne Pathogens Program - Exposure Control Plan 37
14.8 Flex N Stretch 42
14.9 Fatigue 43
14.10 Back Safety / Lifting Policy 44
14.11 Environmental Tobacco Smoke 44
14.12 Explosives & Firearms 44
14.13 Oxygen, Compressed Air, Flammable Gases 44
14.14 Housekeeping 45
14.15 Working Overhead 45
14.16 Ladder Safety 46
14.17 Power Tool Use 46
14.18 Motor Vehicle Safety 47
14.18.1 Vehicle Inspections and Maintenance 47

14.19 Drug & Alcohol Abuse Plan....47
14.20 Site Sanitation Plan....49
14.21 Respiratory Protection Plan....49
14.22 Health Hazard Communication Program....50
14.23 Control and Disposal of Hazardous Waste....51
14.24 Guideline When Encountering Unknown Material....53
14.25 Control and Dispensing of Petroleum Products....53
14.26 Assured Ground Program....53
14.27 Lockout/Tag Out Procedure....55
Index69

1.0 Statement of Safety and Health Policy

Pacific Pile & Marine, L.P. (PPM) is committed to providing a work environment that is safe for its employees. PPM will provide and promote adequate informational services and training for its employees to ensure their safety and health. Owners, managers, and supervisors are responsible for ensuring that all safety and health policies are adhered to. Project supervisors are responsible for conducting safety meetings, project safety inspections, completing accident report forms, disciplinary action to employees, orientating new employees as outlined with PPM's employee orientation packet, and general housekeeping at the project site. Employees are expected to ensure that they are properly aware of their immediate work area activities and potential hazards that might exist. PPM also requests of employees, that if any potentially unsafe matter is recognized by them, that they Stop Work and report to their immediate supervisor at once, without delay. PPM shall be dedicated to promoting a safe work place. Contained within this Health and Safety Plan are the policies and procedures that PPM has adopted for this specific project.

2.0 HASP Purpose and Objectives

The purpose of this task-specific Health and Safety Plan (HASP) is to provide PPM employees with safety-related information and requirements specific to all phases of work conducted in accordance with 29 CFR 1910.120 for Potlatch Corporation at the work location described.

Site Name / Address:	Former Avery Landing +47° 14' 57.46", -115° 49' 15.96" Avery, ID 83802	Project Number:
Project Name:	Avery Landing Cleanup	Revision No.:
Performing Organization(s):	Pacific Pile & Marine, L.P. (PPM)	
Duration of Field Activities:	May 1, 2013 – September 30, 2013	

2.1 Related Health and Safety Documents

Unless otherwise specified in this document, the following also apply to this project and shall be followed as applicable. Each of these documents will be maintained either electronically or in paper form on site.

Document	Purpose and Contents
Project Transportation Safety Plan TBD	Safe work requirements for on-site transportation
Project Material Safety Data Sheets (MSDS)	Chemical safety information for chemicals brought on site
Site Specific Operational Discipline Plan	A plan that communicates the concept & expectations of Operational Discipline to project management & workforce

2.2 Incident Free Performance of Work

PPM's commitment to incident free performance is described in the Owner/Partner's Policy Message **(Attachment A)**

2.3 Stop Work Authority and Tenets of Operational Excellence

All employees at the site, regardless of position, may stop work at the site if that employee feels that activities are not being carried out in a safe manner and in accordance with OE Tenets listed below. Employees exercising stop work authority shall have no repercussions to them from PPM or GeoEngineers employees. Work will not continue on the questionable item until the stop work event has been resolved to the satisfaction of the involved employee. All stop work events shall be recorded on a tracking log by the HSO.

Operational Excellence Tenets of Operation	
We Believe:	All incidents are preventable.
2 Key Principles:	• Do it safely or not at all. • There is always time to do it right.

Operational Excellence Tenets of Operation	
We ***ALWAYS***:	1. Operate within design and environmental limits. 2. Operate in a safe and controlled condition. 3. Ensure safety devices are in place and functioning. 4. Follow safe work practices and procedures. 5. Meet or exceed customers' requirements. 6. Maintain integrity of dedicated systems. 7. Comply with all applicable rules and regulations. 8. Address abnormal conditions. 9. Follow written procedures for high-risk or unusual situations. 10. Involve the right people in decisions that affect procedures and equipment

2.4 Behavior Based Safety

A Behavior Based Safety approach is an effective tool in preventing unsafe acts and decreasing injuries at the workplace. The PPM BBS approach concentrates on observable behaviors, rather than unobservable attitudes towards safety, and encourages safe behaviors, rather than punishment of unsafe behaviors. Our behavior-based safety approach, like the *Loss Prevention System* TM, provides employees with consistent tools to identify and mitigate risks associated with specific tasks, to conduct self-assessments while working, to observe others and provide feedback on their behaviors, and to analyze losses and near-losses. By identifying and preventing at-risk behaviors, the likelihood of incidents occurring or escalating we believe will be greatly reduced.

PPM will adopt the basic principles of the Loss Prevention System TM as its behavior based safety process with guidelines provided in the LPS TM Handbook. Components of LPS TM for this project include the following.

LPS Component	Requirements
LPS Initial Training	PPM employees assigned to the site.
Loss Prevention Self Assessments (LPSA)	Conducted by all employees prior to each task.
Loss Prevention Observations (LPOs)	Conducted at a frequency of approx. 1 per 400 work hours, 80% peer-to-peer, on activities identified at monthly LPS planning and stewardship meetings. Conduct appropriate number of driving observations in accordance with 2012 OE CIP
Job Loss Analysis (JLAs)	Hazard analysis tools developed by crew teams and reviewed by employees prior to performing tasks
Incident and Near miss	Conducted in accordance with PPM Incident Investigation and

Investigations	Reporting Process (II&R) , using 5-why and Why-Tree Root Cause Analysis procedures
OTIPS Data Entry	A database for tracking of LPOs, and corrective action/solutions completion
Verification and Validation (V&V)	A process that requires that PPM site management verifies that corrective actions identified during II&R and LPO processes are implemented and effective
Monthly LPS Stewardship Meetings	Conducted by site management to review prior month's LPS activities, and plan upcoming month. Results communicated with crew.

2.5 Management of Change

The management of change process ensures that changes in operations, facilities, equipment and organization are reviewed, communicated and documented to prevent environmental, health, reliability and efficiency incidents.

3.0 Site Description and Scope of Work

3.1 Project / Site History

Until the 1970s, the Avery Landing Site was used as a railroad switching and maintenance facility for several railway lines. Activities during this time included refueling locomotives, using solvents to clean engine parts, cleaning locomotives, and maintaining equipment. Most of the railroad facilities and structures were demolished after the operations ceased at the Site; however, contamination resulting from Site activities remain on Site in subsurface soils, groundwater, and light non-aqueous phase liquid (LNAPL) based on field investigations conducted in 2007 and 2009 (E & E 2007; Golder 2009).

There was a partial remediation done to the site during the summer of 2012.

3.2 Site Location

The site is located on National Forest Road 50 at mile 45 from the ID-3 junction in St Maries, ID. It is approximately 0.7 miles west from Avery, ID. *(+47° 14' 57.00", -115° 49' 17.81")*

3.3 Scope of Work

The SOW for the Avery Cleanup will consist of removing 48,000 cy clean overburden excavated from the remedial areas will be stockpiled. Then approximately 18,150cy of contaminated soil will be excavated, loaded into trucks, and disposed of at a landfill. Once the contaminated soil has been removed the area will be backfilled with clean soil and graded.

The scope of work for this project and HASP document includes the following tasks:

- Mobilization/demobilization
- Installation of erosion control measures
- Maintenance of haul roads
- Demarcation of work control areas
- Excavation, hauling and stockpiling of clean overburden
- Excavation, hauling and stockpiling of contaminated soil

- Loading, hauling, and dumping of backfill and rip rap material

Projected Start Date: May 1, 2013
Project Completion Date: September 30, 2013
Work Limitations (Normal): **Monday-Saturday 7:00 A.M. to 6:00 P.M.**
Allowable in-water work period: **July 15 to September 1, 2013**
Anticipated Employment: approximately 20 weeks

4.0 Site Emergency Response Plans

4.1 Reporting Incidents

Incidents include: injuries, illnesses, motor vehicle crashes, spills (e.g., petroleum or chemical), Notice of Violation (NOV), security incidents, property damage, near misses, or other incidents that potentially impact the client's reputation.

All incidents must be immediately reported to the PPM Site Superintendent (SS) or Foreman, who will in turn notify the PPM Project Manager (PM). The PPM PM or his designee shall in turn notify the GeoEngineers Field Engineers and/or GeoEngineers Project Manager listed below. Continue the process until acknowledgement from the notified party is received or verbal contact is made***. Leaving messages is not adequate communication.*** All incidents shall be investigated within 24 hours.

In addition, all incidents shall be reported to PPM Corporate Management in accordance with Incident Reporting and Investigation.

The PM will be responsible for ensuring notification. The following incidents require ***immediate notification***:

- Fatal Injury.
- Permanent Total Disability.
- Permanent Partial Disability.
- Hospitalization of 3 or More Persons.
- Property Damage in Excess of $50,000.

Contact Name	Responsibility	Telephone Numbers
Wilbur Clark	Pacific Pile & Marine, L.P. Project Manager	Office: 206-331-3873 Cell: 206-300-1312
Craig Cearley	Pacific Pile & Marine, L.P. Superintendent	Cell: 206-909-1798
John Herzog	GeoEngineers Technical Project Manager	Office: 206-239-3252 Cell: 206-406-6431
Robert Trahan	GeoEngineers Field Coordinator	Office: 206-239-3253 Cell: 206-240-2300

Contact Name	Responsibility	Telephone Numbers
Abhijit Joshi	GeoEngineers Site Engineer	Office: 206-239-3256 Cell: 425-223-9028
Paul Robinette	GeoEngineers Site Engineer	Office: 253-383-4940 Cell: 253-278-0273

4.1 Incident Procedures

Successful implementation of the response plan depends upon the alertness of workers in the immediate area. When starting a new task, look around and locate first aid stations, fire extinguishers and emergency exits. Keep your work area clean and walkways free of debris or other tripping hazards. Where there is more than one victim, treat those with life threatening injuries first.

In the event of an emergency, it is imperative to remain calm. The primary assessment should take only a few minutes and will greatly speed up the ability to render aid to any victims.

- Check the scene of the accident or fire.
- Note if the danger still exists. *Do not become a second victim*.
- Disconnect the utilities where necessary, or otherwise neutralize the scene.
- Set up a clean zone to prevent further danger or spread of fires.
  - ***In case of fire***, check to see if all persons in the area are evacuated to a safe place.
  - ***In case of accident***, make sure the cause of the accident has been removed in order to administer first aid to any victims.
- Observe the scene and know the directions to the jobsite for use of emergency vehicles.
- Check the vital statistics of the victim(s) for information to be passed to the Emergency Medical Technician at the emergency number.
- Have a clear idea of what and where the problem is before dialing the emergency number.
- If a radio is available, use it to relay to the job office phone the information needed by the emergency operator. Clear the radio channel by declaring an emergency, to prevent unnecessary chatter. While the job office personnel call in the emergency, stay in radio contact to relay any information requested.
- ***If the emergency is fire***, use the nearest fire extinguisher available to neutralize the blaze.
  ****Fire extinguishers will be in the area at clearly marked designated locations or in any company vehicle nearby.****
  If the fire can be contained, do so, but call the fire department as soon as possible to report the incident and request assistance as needed. If there is any doubt, call 911.
- ***If the emergency is an accident***, make sure the danger that caused the accident no longer exists. Safely remove any live electrical lines, close gas valves, remove vehicles, provide oxygen/air, clear any danger of falling objects and otherwise neutralize the area. Stabilize the victim and/or administer first aid as needed. Only qualified persons should attempt first aid. Except in extreme emergencies (life threatening), the victim should not be moved until the arrival of qualified Emergency Personnel.

Primary Survey

- Check to see if patient responds when spoken to.
- If there is a possibility of spinal or neck injury, keep head, neck and spine immobilized.
- Check airway. Use jaw thrust maneuver to open airway. Listen and watch to ensure breathing.
- If there is no sign of life, CPR may be required.
- Control any serious bleeding.
- Treat for shock.

Second Survey

- Tell the patient what you are doing.
- Do a head-to-toe check to determine extent of injury.
- Check the level of consciousness every few minutes.
- Check vital signs every 15 minutes.
- Obtain victim's name, age, and any known allergies (if victim can respond).
- Look for any medical alert devices and have office personnel pull file to determine any medical notes therein.
- Continue first aid until arrival of Emergency Personnel and assist in transportation of victim to medical facility.

4.2 Medical Support Plan

PPM has first aid kits in each company vehicle and at the project site office. In all cases the required number of first aid kits will meet or exceed requirements. Special aid kits will be provided as necessary.

A. Emergency treatment for serious injuries:
- Benewah Community Hospital, 229 S. 7th Street St Maries, 208-245-5551, should be used for serious injuries.
- Due to the remote location, the helipad located on the northern portion of the site may be needed to evacuate the personnel. Please wait for the emergency operator's direction before proceeding to the hospital.
- 911 should be called from a cellular phone or the job office phone, and the caller must advise the operator that the call is being placed from the site on NF Road 50 at mile 45 of the St Joe River Rd in Avery, ID and that an accident has occurred.
- The caller will give the exact location of the accident and the directions to the site.
- Give your name and describe the nature of the emergency.
- A person will be assigned to flag a rescue team

B. Non-emergency treatment:
- The clinic should be advised that a non-emergency injury is en route to them for treatment.
- Describe the victim's name, age, sex and the nature of the injury.
- See Section 4.4 for further details

4.3 Communications

A primary and back-up means of communications for field crews have been established as described below.

Type of Communication	Primary Means	Back-up Means

Type of Communication	Primary Means	Back-up Means
Communications with Fire and Emergency Services	911	Cell Phone
Communications with home base	Radios	Cell Phone
Emergency / Drills Communications among field crew members	Radios Eye contact, hand signals (equipment operators)	Horns in machinery, Portable air horns, flashing lights

PPM's emergency contact phone numbers:

Home office	**206 331 3873**
Wilbur Clark's Cell Phone	**206 300 1312**
Craig Cearley's Cell Phone	**206 909 1798**
Jason Hall's Cell Phone	**208 661 3166**

4.4 Non-emergency Medical Incidents

If an injury or health incident occurs that is deemed non-life threatening and does not require emergency room services, the SS or designee will contact WorkCare, Inc., the occupation health care provider for PPM. WorkCare will advise the SS or designee on the appropriate care necessary for the particular injury/health incident.

If necessary, WorkCare will refer the patient to the designated occupational health clinic for evaluation and care.

Call 888-449-7787 for 24/7 WorkCare case management services.

If an employee is not seriously injured but requires immediate attention, the employee shall be transported to the designated WorkCare clinic or the Emergency Room at Benewah Community Hospital. For all cases requiring medical attention, someone shall accompany the individual to the clinic or hospital. This individual will typically provide transportation to and from the clinic/hospital. This individual shall remain with the injured employee to provide information to the clinic/hospital, monitor the injured employee's status, and periodically update the SS or designee.

4.5 Return to Work

After any medical evaluation or treatment beyond basic first aid, a fit for duty authorized by WorkCare will be required before an employee is allowed to return to work. If the employee has been provided medical care at a non-WorkCare medical facility, the HSO will obtain from the employee a HIPPA release of medical information and forward this to WorkCare. The employee will not be allowed to return to work until WorkCare has reviewed the relevant medical information and provided a release to duty.

4.6 Drills and Exercises

Emergency response drills may be conducted to train employees on the procedures and identify opportunities for improvement. The following drills may be conducted:

- Response to spill near the river— objectives: confirm emergency notification contact numbers, assess site emergency communication procedures, assess site staff knowledge of emergency evacuation/shelter procedures, assess emergency shutdown procedures
- Response to injury incident from heavy equipment collision –objectives: confirm emergency notification contact numbers for off-site medical facilities, assess case management protocols/providers, confirm locations and condition of emergency response equipment

4.7 Evacuation

If an emergency situation develops which requires evacuation of the work area, the following steps shall be implemented.

Evacuation Step	Methods and comments:
Notify affected workers	Use radios and, if needed, hand held air horns (3 short blasts).
Evacuate to safe location	Primary assembly point **–**PPM Field Office **(Rally Point 1***)* Backup assembly point – Helipad at west end of site (**Rally Point 2)** Shelter-in-Place Location: - PPM Field Office
Assemble and account for workers	The SS shall refer to daily site entry sign-up sheet and take count of all personnel.

4.8 Emergency Situations and Response Actions

In case of:	Response actions:
Injury or illness (emergency)	**Notify Fire and Emergency Services (911) if prompt medical attention is needed.** Notify SS. Stabilize and assess injured person and surrounding situation. Do not move if there is possibility of head, neck, or back injury unless absolutely necessary (e.g. fire).
Chemical exposure	**Notify Emergency Services (911) if prompt medical attention is needed.** Notify SS. Identify potential chemicals exposed to and how long. Decontaminate and remove clothes. Consult medical care provider even if no symptoms are showing.

In case of:	Response actions:
Fire or explosion	**Notify Fire and Emergency Services (911) if prompt medical attention or property protection is needed.** Notify SS Use fire extinguisher to put out flames. If more than one extinguisher is needed, abandon attempts to extinguish fire. If explosion occurs immediately implement evacuation procedures and perform head count.
Adverse weather	Continually monitor developing weather situations As weather approaches notify SS who in turn notifies HSO Shut down and get to appropriate shelter as weather approaches, do not wait for it to reach location. If lightning observed, shut down outdoor activities when lightning is within 30 seconds of the Site. Equipment operators shall stop their equipment and park it safely before heading for shelter. If it is not safe for an operator to leave the equipment and seek shelter because of lightning conditions, the operator will remain in the cab of the equipment with attachments grounded and equipment tuned off. No personnel will be left on the ground in an exposed location. Preferred shelter is a permanent building. Personnel may also take shelter in trailers or low profile rubber tired equipment (e.g., pickups). Avoid driving pickups or any other equipment except to help evacuate personnel. Wait 30 minutes after last observed lightning before returning to work. For general work, average wind speeds equal to or greater than 40mph, or wind gusts of 60mph or greater, will result in temporary suspension of activities until the wind subsides. When working with large tarps, work will be suspended at sustained wind speeds of 20 mph.
Material spill or release	**Notify Fire and Emergency Services (911) if prompt medical attention is needed.** Notify SS Restrict access to spill with barricades, tape, etc. SS will oversee clean-up of spills. Spill kits containing sorbent pads and absorbents shall be located at strategic locations around the site, including fueling areas and the lay down yard,

4.9 Off-Site Emergency

Off-site emergencies are those emergencies arising outside of the control of the site, but which have the potential to impact the safety of the site.

These emergencies include (but are not limited to):

- Wild fires
- Law enforcement operations
- Emergencies on roadways near site

Personnel shall report off site emergencies when they become aware of them in the same manner as other incidents (see previous paragraphs).

Personnel detecting emergencies that they judge to have an imminent potential impact on safety shall call a stop work and evacuate the area immediately according to the evacuation procedures above and make the incident report as soon as possible.

The supervisor receiving the report shall immediately contact the SS or senior operational supervisor on site and the senior HSO on site. The SS and site HSO shall make an assessment of evacuation or stop work requirements and notify the crew of evacuation or stop work as described in the above paragraphs.

When emergency actions have been taken, the incident shall be reported to the GeoEngineers Project Manager and PPM corporate office according to the emergency procedures described in the paragraphs above.

4.10 Spill Plan

4.10.1 Spill Prevention

Protective measures to prevent oil spills shall include the following:

1) Fuel shall be disposed from hose nozzles or approved safety cans equipped with self-closing valves or caps. Tanks will be properly vented.
2) Oil shall be dispensed from containers equipped with self-closing valves or caps.
3) Fueling and oil dispensing for land-based equipment shall be done only in areas designed for such activities.
4) Fuel oil transfer for floating equipment shall be in accordance with provisions of U.S. Coast Guard Regulations, 46 CFR and 33 CFR parts 155 and 156.
5) Fuel and oil storage shall be contained by berms

4.10.2 Spill Response

The most likely spills would be of motor oil from vehicles and equipment, hydraulic oil from equipment, antifreeze from equipment and vehicles, diesel from heavy equipment, or gas from vehicles. The following spill equipment will be onsite:

- An adequate supply of materials will be on hand at the project site to use as a primary means of containing any oil or petroleum product spilled on land or in water while awaiting the arrival of the spill response team.
- Emergency spill kit(s) and/or absorbents will be stored in appropriate areas around site.
- Sufficient waste oil receptacles shall be provided at the petroleum product storage area and at dispensing sites.

- A supply of trash bags will be kept in the job shack.
- In addition, copies of the manual on the proper employment and use of containment booms shall be maintained on all floating equipment.

A complete oil and hazardous waste spill procedure has been prepared by Pacific Pile and Marine and will be posted in all petroleum storage areas and on major floating equipment. Fuel or oil spill containment and cleanup operations will begin immediately upon discovery.

Initial steps:

- Ensure that it is safe to remain in or enter the area.
- Work should cease in a safe manner.
- Stop or control the source of the spill: All personnel will be utilized to prevent the spill from getting worse, then cleaning up the spill.
- Re-containment of the spilled material.
- Cover the spill with sorbent materials stored on site.
- Remove spilled product, contaminated soil, and saturated sorbent by firms specialized in the clean-up of spills.
- Disposal will be in accordance with regulatory stipulations.
- All spills involving petroleum products or hazardous materials shall be immediately reported to the
    - Project Manager, Superintendent
    - GeoEngineers as soon as practicable.
    - National Response Center (NRC), EPA and all other applicable government agencies of oil and HAZMAT spills.

Environmental Protection Agency (EPA) Hotline	800 621-8431
National Response Center (report spills and chemical releases)	800 424-8802
CHEMTREC (for hazardous materials spills)	800 262-8200
ChemTel (for hazardous materials information)	800 255-3924

4.11 Fire Prevention Plan

- Fire extinguishers will be located in the in the job shack, on operated equipment, and at areas of hot work.
- Orientation will cover fire prevention.
- Fires and open flames shall not be left unattended.
- No trash or clearing material will be burned.
- Good housekeeping is required. Trash and other combustible material will not be allowed to accumulate.
- Disposal of combustible waste materials shall be in compliance with applicable fire and environmental laws and regulations.
- Oxygen and acetylene canisters shall be separated by 20’.
- If heating units are utilized, proper clearance should be maintained between the units and combustible material.
- Precautions shall be taken to protect formwork and scaffolding from exposure to, and spread of, fire.
- Flammable liquids shall be kept in closed containers or tanks when not in use.

- Workers shall guard against any part of their clothing becoming contaminated with flammable or combustible fluids. If this should happen, they will not be able to continue work and they must remove or wet down the clothing as soon as possible.
- No smoking is allowed while fueling equipment or while near flammable liquids.
- Heaters must be separated by 10' from combustible tarps, canvas, etc. These items shall be secured so the wind does not blow them closer to the heaters.
- Fire extinguishers shall be inspected monthly, with the date of the inspection and the inspector's signature recorded.

4.12 Fire Fighting Plan

Fire extinguishers will be strategically placed in the job shack, equipment and near hot work. Should a fire occur:

- Work should cease in a safe manner.
- One person should be sent to call 911 if there is any possibility of substantial loss.
- The remaining crew will use the fire extinguishers to put the fire out.
- All fires will be reported to GeoEngineers.

4.13 Posting of Emergency Information

Emergency telephone numbers will be posted at the project office and on the bulletin board.

Emergency procedures will be posted at the site. A simulated accident should take place early in the job to ensure it will work.

4.14 Near Miss Reporting

A near miss is any incident that under different circumstances could have caused an injury, property damage, an environmental release, or any detrimental loss of resources. The purpose for reporting and following up on near miss incidents is to prevent a reoccurrence of the incident.

4.15 Incident Investigation

All incidents and near misses will be investigated in accordance with PPM Incident Investigation and Reporting Process (II&R). The investigation report including the Root Cause Analysis must be finalized and approved by PPM HSO within 21 days of the incident.

HSO will write up the accident reports after investigation and update the OSHA 300 report.

5.0 Project Team Organization and Responsibilities

5.1 PPM Organizational Chart

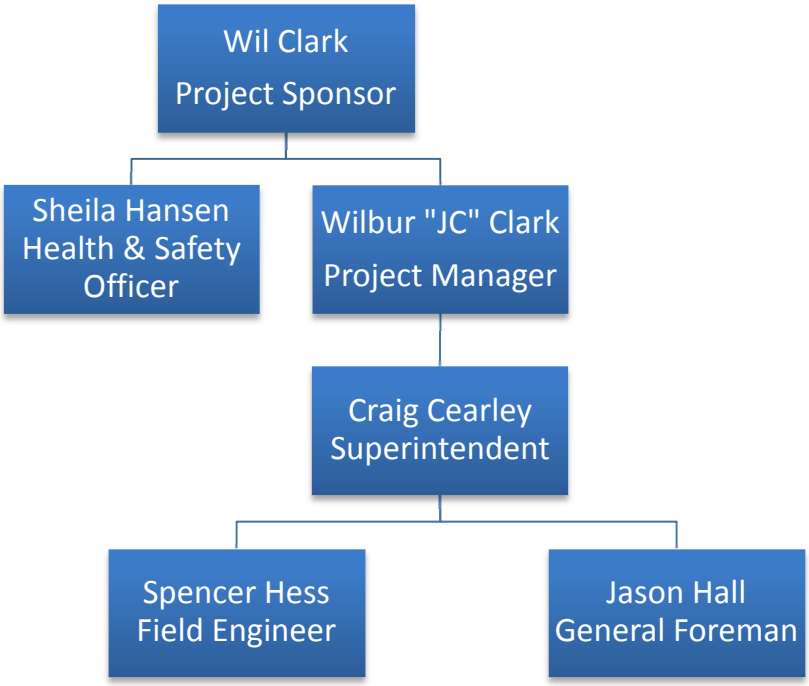
Wil Clark
Project Sponsor
Sheila Hansen
Health & Safety
Officer
Wilbur "JC" Clark
Project Manager
Craig Cearley
Superintendent
Spencer Hess
Field Engineer
Jason Hall
General Foreman

5.2 Responsibilities and Lines of Authority

Wil Clark shall possess ultimate authority to administrate the safety and health policies of PPM. He shall be intimately aware of any and all accidents or near accidents on the project site. He shall, at any time deemed necessary, avail himself to the project site to enforce, correct, or ensure that proper safety and health practices are being met at the project site and in accordance to this specific plan.

Wilbur "JC" Clark is the site Project Manager and will be responsible for the day to day management and quality of work. His responsibilities include report writing, material purchases and cost tracking. Additionally, he will oversee workforce safety, be actively involved in daily safety meetings and site inspections, along with the SSHSO. He is one of the first to be notified of incidents involving near miss, injury or equipment damage. He will ensure that any corrections deemed necessary by the SSHSO are completed satisfactorily.

Craig Cearley is the Site Superintendent and will be responsible for production and quality of work. He is the designated Site Safety and Health Officer (SSHO) and shall be responsible for direct project safety implementation and compliance. He shall direct immediate corrective actions or work stoppage involving known safety or health infractions. He shall be the immediate point of contact for any accident. He also will be responsible for scheduling and personnel assignments. Other responsibilities include field safety, such as developing JLA's,; and implementing/ensuring the JLA's are followed. He is one of the first to be notified of incidents involving near miss, injury or equipment damage.

Sheila Hansen is the Corporate Safety and Health Officer (SSHO) and shall be responsible for direct project safety implementation and compliance. She shall inspect the project site to ensure compliance. She shall document any incident or unsafe matter that she has knowledge of.

5.3 Competent Persons

Task Requiring Competent Person	Designated Competent Person
Signaling	Jason Hall / Corey Woodley
Excavation	Craig Cearley/ Jason Hall
Operating the Crane or Excavator	Operator Brian Hansen/Corey Woodley/ Jason Hall

5.4 Competent Person Requirements

No work shall be allowed for the tasks listed above if the designated competent person is not present at the job site.

5.5 Buddy System

PPM's incident-free performance objective is very demanding. This objective can only be met if every employee performs all work without incident. It is further necessary for each person to take responsibility not only for themselves, but their co-workers as well. Therefore, PPM employees will use a buddy system.

The HAZWOPER standard requires that employees remain in contact with at least one other "buddy" in the event of an emergency or accident. The "buddy system" challenges each employee on site to not wait for an accident to happen to our buddies. Instead, correct unsafe conditions or challenge unsafe behaviors around us. Don't let it pass! If you see that someone else is about to make a mistake or hasn't recognized a hazard, take responsibility to challenge the situation.

It's not enough to not be at fault! Stop looking on accidents as someone's fault. Instead, look on an accident as everyone's failure to prevent the accident.

5.7 Professional Conduct

PPM respects every individual who works for our company. We expect our employees to conduct themselves in a professional manner. The following acts by Company Employees are prohibited and can be Grounds for Immediate Dismissal:

- Fighting, horseplay, practical jokes or creating a disturbance.
- Harassment of any person: Sexual, racial, religious, etc.
- Violation of safety, health and environmental protection rules referenced in materials presented by PPM management.
- Abusing, destroying or removing without permission any property belonging to PPM, its employees, other contractors or project Owners.
- Reporting to work under the influence of illegal drugs or alcohol or possession or use of them during working hours.
- Possession, on Company property or at job-sites, of firearms or other deadly weapons.
- Oral or written falsification of records or reports relating to injury, illness, absence, hours worked or work accomplished.
- Failure to report to work on time. All employees must call the office each day when unable to come to work.

Depending on the nature of the violation, employees may receive verbal reprimands, written warnings (copies placed in personnel files), suspensions of various lengths or immediate termination. Additional repercussions, such as involvement of regulatory agencies and law enforcement, may also result.

6.0 Training, Medical Monitoring and Meeting Requirements

6.1 Training Requirements

The following training is required for on-site personnel. Copies of training certificates and training records will be kept at the job site.

Required Worker Training:	Task-specific Training Requirements
• 40-hour OSHA General Site Worker • 8-hour OSHA Supervisor, for Supervisors • 8-hour OSHA Refresher • Site Orientation • Site-Specific HASP • Communications, Alarms and Evacuation Routes • Minimum 2 personnel with current first-aid/CPR/AED • Defensive driver training CDL for drivers of vehicles>=20,000 lbs. GVWR when driving on public roads.	• Applicable Job Loss Analysis (JLAs) • Hazard Communication • Hearing Conservation • Bloodborne Pathogens • Competent Person training • Equipment operator training and competency • Forklift operator certification • Sling and rigging training • Signaling • Man Lift operator certification • Respirator training and respirator fit testing. • Fall protection • Hot work and fire-watch training • PPE
Location of training records: PPM Administrative Office	*Exempted on-site personnel:* • Support area deliveries (e.g. FedEx). • Escorted visitors outside exclusion or controlled zones will require site orientation only, with written test

6.2 Orientation Training

A. Visitor Orientation:
   1. Emergency procedures, including the Emergency Evacuation Plan (EEP)
   2. Site-specific safety hazards.

B. Employee Orientation:
   1. Explain the company safety program, including:
      a. Safety Meetings.
      b. Accident Investigation and Reporting.
      c. Physical Agent Data Sheets.
      d. Drug and Alcohol Abuse Policy.
   2. Personal protective equipment required.
      a. Hard hats while outside vehicles and equipment.
      b. ASTM approved work boots.
      c. Eye protection where the possibility of foreign objects in eyes exists.
      d. Other as needed.
   3. Line of communication and responsibility for immediately reporting accidents.
      a. When to report an injury.
      b. How to report an injury.
      c. To whom an injury should be reported.
      d. Filing of accident report forms.
   4. General overview of operation, procedures, methods and hazards as they relate to the specific job and duties.
   5. Pertinent safety rules of the company and State Safety and Health Codes.
   6. First aid supplies, equipment and training.

   a. Obtaining treatment.
   b. Location of facilities.
   c. Location and names of first aid personnel.
7. Emergency Plan.
   a. Exit locations and evacuation routes.
   b. Use of fire-fighting equipment (extinguishers, hoses).
   c. Specific procedures (medical, chemical, fire, etc.).
8. Vehicle Safety.
9. Personal work habits.
   a. Fighting.
   b. Inattention.
   c. Smoking policy.
   d. Serious consequences of horseplay.

6.3 Requirements for Emergency Response Training

PPM requires that an emergency responder possess a current first aid certification and CPR certificate. On this particular project, the HSO, SS, and foremen shall be authorized by PPM to be first responders. Although PPM shall instruct the general work force to take necessary steps to preclude any further damage or injury, but unless certified and acknowledged by, PPM, they shall not provide first responder treatment to the injured. ***Under no circumstances should the injured transport themselves to the clinic***.

6.4 Short Service Employees

A Short Service Employee (SSE) is one defined as any PPM or subcontractor employee with:

- Less than 6 months experience in the same job, **or**
- Less than 6 months with his/her present employer

The SSE process requires:

- An SSE cannot be on a crew by himself/herself
- Crews with less than five will have no more than one SSE
- Crews of five or more will not have more than 20% SSE employees
- Crew makeup will be documented on the PTW

Before starting work PPM is responsible for establishing a mentoring process to ensure SSEs are properly supervised, trained and managed to prevent accidents.

6.5 Safety Meetings & Inspections

At a minimum, the SS shall conduct daily inspections of the project site. If, during these inspections, any deficiencies are noted they shall be recorded on the inspection sheet. The safety inspection check list shall allow a reasonable time to correct the deficiency. *However, at no point shall work continue if there is imminent danger.* The safety inspection check list shall confirm the correction date of the noted deficiency. A return inspection of the noted deficiency will be scheduled within the prescribed timetable as follow-up that the deficiency has been corrected. Such inspection shall be documented on the original inspection sheet.

6.5.1 Daily Safety Meetings (Tailgate)

A safety meeting must be held by the person in charge and involving the job-site foreman and members of the crew:

- At the beginning of each work day

- After lunch each work day (at which time JSA/JLA's may be modified,)
- In the event of a significant operational change

These meetings should contain, but not be limited to:

- Job planning
- Job assignments
- Safety procedures and concerns relative to the new work
- Daily requirement for crew to complete, review, and/or modify, written JSA/JLA
- Any unique or unusual project hazards
- Previous Stop Work's and Hazard ID's are reviewed
- Discussing work to be completed and how to do the work safely
- Conduct a Loss Prevention Self-Assessment (LPSA) prior to every task or following a changed condition
- Analyzing lessons learned
- Sharing incidents and near misses
- Recognition
- Conducting a learning exercise
- Observing trends and discussing the corrective actions tied to those trends

These meetings must be documented on the foreman's daily time sheet.

6.5.2 Weekly Safety Meetings

It is the policy of PPM to hold FOREMAN-CONDUCTED MANDATORY ATTENDANCE SAFETY MEETINGS EACH WEEK. Safety-related topics can be provided for each meeting by the office or foreman may choose site related topic. Attendees must read and discuss the topic and must confirm their participation by signing the topic sheet.

However, it is very important that foremen and crewmembers fully discuss safety-related incidents or observations made since the previous meeting. The topic discussed and remedies enacted must be documented on the safety meeting sheet supplied by the office.

6.5.3 Walk-Around Safety Inspections

Site inspections (walk-around safety inspections) *will be performed by one individual from Management (PM, SS, Forman) and one Authorized Representative from the crew who is elected by the crew.*

The daily walk-around safety inspection will be documented and records of the safety inspections shall be maintained until the end of the job for possible review by state officials.

6.6 Physical Qualifications

6.6.1 Fitness for Duty and Personal Qualifications

PPM employees will be physically, medically, and emotionally qualified to perform the duties to which they are assigned. Some factors to be considered in making work assignments are activity knowledge, strength, endurance, agility, coordination, and visual and hearing acuity. PPM employees must be able to read and understand English. Operators of equipment or vehicles must be able to read and understand the signs, signals, and operating instructions in use. Where permits are required to operate specified equipment, the employee will have the permit on hand.

6.6.2 Drugs and Alcohol

In accordance with the PPM Drug and Alcohol Policy at no time while on duty may employees use or be under the influence of alcohol, narcotics, intoxicants, or similar mind-altering substances. Employees found under the influence or consumption of substances will be immediately removed from the jobsite. PPM reserves the right to test for substance abuse. As part of implementing PPM's program to deter alcohol, drug, and substance abuse, each employee may be requested to submit to urine, blood, or other medical tests at any time, with or without notice. Employees are further subject to "for cause" drug, alcohol, or substances testing. "Cause" for a test will be warranted if the Company has reason to believe that the covered worker has used illegal drugs or has misused alcohol, prescription medication, or over-the-counter drugs. Such a reason to believe may be, but will not be limited to, the following: accidents, injuries, near misses, excessive absences, tardiness, altercations, lengthy absences, possession of drugs, or thefts. This policy applies to PPM employees and subcontractors.

6.6.3 Medical Surveillance Requirements

In accordance with 29 CFR 1910.120(f), PPM employees and subcontractors performing tasks with the potential to be exposed to chemicals from impacted media will undergo medical surveillance on the following occasions:

- Prior to assignment
- Project Field Team Members at least once every twelve months
- At termination of employment or reassignment
- As soon as possible upon notification by an employee that the employee has developed signs or symptoms indicating possible overexposure to hazardous substances or health hazards, or that the employee has been injured or exposed above the permissible exposure limits or published exposure levels in an emergency situation

Additional information regarding medical surveillance is available from the PPM corporate office

7.0 Air (Area) and Personal Monitoring, Environmental Sampling, and Dust Control

7.1 Real-Time Air Monitoring

Real-time air monitoring will be conducted on site using the instruments and at the frequency listed in the table below. Air monitoring instrument calibration will be conducted or checked daily in accordance with manufacturer guidelines and documented on instrument calibration log forms. Results of air monitoring will be documented on air monitoring record forms. Completed forms will be maintained on site.

AIR MONITORING INSTRUMENTS

Instrument	Monitoring Objective	Frequency of Measurements	Action Levels

Instrument	Monitoring Objective	Frequency of Measurements	Action Levels
Photo-Ionization Detector (PID) or Flame Ionization Detector (FID)	VOCs when excavating, sampling, or handling impacted soil and/or water	Every 15 minutes until baseline established	See Section 7.2
Benzene Colorimetric Tube	Benzene when sampling or handling impacted soil and/or water	Based on PID or FID levels	See Section 7.2
Combustible Gas Indicator (LEL meter)	Confined space entry or handling impacted soil (drilling)	Per confined space entry permit	>10% LEL
Oxygen Meter	Confined space entry	Per confined space entry permit	<19.5% and >21.5%
Hydrogen Sulfide Detector	Confined space entry	Per confined space entry permit	10 ppm
Carbon Monoxide Detector	Confined space entry, equipment use in enclosed structures	Per confined space entry permit	25 ppm
Dust/Particulate Monitor	Ambient dust during construction traffic, estimation of metals when excavating, sampling, or handling impacted soil	Every 15 minutes when visible dust is sustained for 5 minutes	>2x Upwind Measurement
Other:			

7.2 VOC Air Monitoring Action Levels

If PID readings of 10 ppm above background are sustained for 5 minutes, work will be stopped and conditions will be evaluated by the Trihydro SSO, Matt Clark. If it is safe to proceed, the Trihydro SSO will direct workers to upgrade respiratory protection as described in Table 12. In addition, benzene colorimetric tubes will be collected in worker breathing zones.

AIR MONITORING ACTION LEVELS

Hazard	Levels		Respirator Type	Cartridge Type	Cartridge Change Schedule
	Lower	Upper			
Benzene	0.5 ppm	10 ppm	HM APR	P-100/OV	Each SHIFT
	10 ppm	50 ppm	FF APR	P-100/OV	Each SHIFT
	50 ppm	500 ppm	Stop Work	N/A	N/A
Volatile Organic Compounds other than Benzene	10 ppm	50 ppm	HM APR	P-100/OV	Each WEEK
	50 ppm	200 ppm	FF APR	P-100/OV	Each SHIFT
	200 ppm	500 ppm	Stop Work	N/A	N/A

Abbreviations: FF = full face HM = half mask APR = Air Purifying Respirator	OV = organic vapor SHIFT = start each shift with a new cartridge WEEK = start each week with a new cartridge

7.3 Personnel Air Monitoring

If airborne contaminant concentrations dictate an upgrade of PPE, full shift personnel samples will be collected for laboratory submittal using activated charcoal diffusion badges for benzene

8.0 Personal Protective Equipment

The following personal protective equipment (PPE) will be used for the identified activities.

Activity	Head/ Face	Foot	Hands	Respirator	Clothing
General site labor, non-intrusive support zone tasks	Hard hat(2), safety glasses(2)	Safety toed boots	High-vis leather gloves when manual handling of materials.	None. (1)	Shirt w/long sleeves Long pants high visibility vest (5)
Supervision of support zone work.	Hard hat(2), safety glasses(2)	Safety toed boots	High-vis leather gloves	None. (1)	Shirt w/long sleeves Long pants high visibility vest (5)
Dry contaminated	Hard hat(2), safety	Safety toed boots with	High-vis leather or PVC	No respiratory protection, unless	Tyveks or launderable

Activity	Head/ Face	Foot	Hands	Respirator	Clothing
equipment decon.	glasses(2) Face shield or goggles	boot covers (4)	coated outer gloves	upgraded to Level C air purifying respiratory protection with OV cartridges if IH sampling, or real-time monitoring mandates	coveralls (3) high visibility vest (5)
Wet Decon	Hard hat Safety glasses (2) face shield	Safety toed boots with water resistant outer boot covers (6)(8)	Nitrile gloves or PVC coated cotton gloves	None (1)	Water resistant outer coveralls (3)(6)(7) High vis vest(5)
Cutting and Welding	Welders Helmet/Face shield #3 shade	Safety toed / Leather boot with water resistant outer boot covers (6)(8)	Heat resistant gloves (leather)	Half face respirators with P100 filter cartridge. Backpack adaptor	Welding/ Cutting leathers Jacket, Chaps
Drivers	(9)	(9)	(9)		Long pants shirts with long sleeves (9)

(1) Voluntary use of respirators is authorized for nuisance dusts and exposures known to be below PEL levels.
For nuisance dust use disposable N, R or P 95 or better (dispose of N or R types daily and P type weekly)
For odors use half mask with OV or OV/P95 or better (change at start of week)
(2) Hard hats and safety glasses are not required inside of enclosed cabs with windshields.
(3) Dust resistant outer coveralls such as Tyvek with modesty garments underneath. These are not allowed for use with hazardous materials. The HSO may remove this requirement for tasks that involve minimal risk of contact with contaminants on personal clothing or skin,
(4) Boot covers are any suitable covering capable of resisting dust penetration which would contaminate safety toed boots, and with durability appropriate for the task.
(5) High visibility vests are for use in work areas within 25 feet of vehicular or equipment traffic. For heat stress considerations, an orange/high-visibility T-Shirt, or an orange/high-visibility hard hat may be substituted for the vest.
(6) When working with wet impacted materials, PVC or other equivalent water resistant outer boot covering will be used to prevent contamination of steel toed boots. Under conditions with launderable coveralls are penetrated by wet conditions they shall be similarly substituted or covered with a suitable outer water proof layer.
(7) For purposes of preventing heat or cold stress, decon personnel may use water proof outer coverings with holes in the backs or aprons to allow for perspiration to escape (provided inner garments do not get wet as a result.
(8) Wet work and decon may use a PVC safety-toed boot in place of a leather boot with cover.
(9) Drivers entering potentially impacted areas shall be prepared to put on the applicable personal protective clothing worn in that area in the event of an emergency exit.

9.0 Site Hazard Analysis Process

The OSHA Standard requires that all activities be evaluated for hazards in order to establish controls for those hazards. This section describes task-specific hazard analysis tools and procedures.

9.1 Loss Prevention Self-Assessment (LPSA)

The LPSA is an LPS™ three-step hazard and risk assessment process in which workers assess the risks, analyze methods to reduce the risks, and act to eliminate or reduce the risk. PPM employees will perform LPSAs at the beginning of the shift, before new activities, when situations change, and immediately following an incident or near miss. On this project there will be a heightened focus on supervisor and crew participation in the LPSA process.

9.2 Job Loss Analysis (JLAs)

Prior to beginning work on the project, each task will be broken down to activities and analyzed for potential hazards. JLAs shall then be developed for all significant work tasks associated with this project. New tasks, or previously unrecognized hazards require a new JLA or redraft of existing ones. JLAs are developed by a team comprising supervisors, crew members and the HSO. Following the identification of the hazards associated with a task job steps, control measures are evaluated and protective measures or procedures are then instituted.

JLAs are reviewed daily to ensure that hazards and controls are current and effective. All crew members are encouraged to critique JLAs they are working with, and provide constructive suggestions for improvement. The process known as “dirtying up” ensures that the JLA remains relevant to the task. Applicable JLAs will be reviewed and updated by field personnel prior to starting work each day. A hard copy of the JLA will be printed and made readily available for employee use.

Site specific JLAs are found in Attachment A

10.0 Site Hazards

Risk ranking is based on severity of outcome, frequency of exposure, and potential for occurrence, and are rated as high, moderate or low. (see Risk Analysis Matrix below)

Risk Analysis Matrix:	Probability		
Severity	Not Likely	Probable	Highly Likely
First Aid Injury/Slight Property Damage	Low	Low	Moderate
Injury/Major Property Damage/Environmental Release	Low	Moderate	High
Hospitalization/Fatality	Moderate	High	High

10.1 Contaminants of Concern and Regulatory Exposure Levels

The contaminants of concern (COCs) on site are mainly derived from spills of diesel and gasoline fuels, and are listed below with maximum concentrations found on soils during extensive investigation of the site.. Groundwater pumped from impacted areas may be petroleum hydrocarbon contaminated.

Contaminant of Concern	OSHA PEL TWA	ACGIH TLV TWA	Max. Concentration Found in Soils
Benzene	1 ppm	0.5 ppm	8570 ppm
Ethyl Benzene	100 ppm	100 ppm	371,000 ppm
Toluene	200 ppm	50 ppm	
Xylene	100ppm	100 ppm	

10.2 Analysis of Key Chemical Hazards

Based on the contaminants of concern, the following table provides a listing of the relative risk of chemical exposure

Chemical Hazard	Hazard Ranking (High, Medium, Low)	Related Tasks	Controls/PPE
Benzene	Low	Management of impacted soils, removal of GWRS, sampling impacted soils	• Air monitoring using colorimetric tubes • Respiratory protection as dictated by action levels
Toluene, ethyl benzene, xylenes	Low	Management of impacted soils, removal of GWRS, sampling impacted soils	• Air monitoring using PID field survey instrument • Respiratory protection as dictated by action levels

10.3 Analysis of Key Physical Hazards

Specific physical hazards anticipated at this site are listed below.

Physical Hazard, and Associated Energy Source	Hazard Ranking (High, Medium, Low)	Related Tasks	Controls/PPE
Heavy Equipment Hazards, Including Collisions, Striking Ground Personnel, Damage to Surrounding Infrastructure, and Equipment Failure. (Motion, mechanical, pressure, biological, gravity, sound)	1. High	1. Most tasks involve the use of heavy equipment.	1. All operators will be trained and qualified 2. All equipment shall be cleaned and inspected prior to mobilization to site. 3. Conduct daily equipment inspections. 4. Conduct planned preventative maintenance on equipment. 5. Provide spotters when equipment working in close proximity to each other or surrounding infrastructure, and when backing trucks into load-out/dump areas. Train spotters and operators in hand communications. Train spotters in avoidance of “line-of-fire”. 6. Establish demarcation zones around heavy equipment activities.

Physical Hazard, and Associated Energy Source	Hazard Ranking (High, Medium, Low)	Related Tasks	Controls/PPE
			7. Provide radios for all operators and spotters. 8. Ground personnel to remain outside swing radius plus 25 ft from equipment. Operators to ground attachments before foot personnel approach. 9. Ground personnel to stay well out of tip zones of dumping trucks. 10. Awareness and avoidance of pinch points during maintenance activities. 11. Use of LO/TO procedures during maintenance activities. 12. Hearing protection will be worn by operator if doors/windows of cab are open.
Motor Vehicle Crash, Haul Truck Collisions (Motion, mechanical, biological)	1. Low 2. Medium 3. Medium 4. Medium 5. Medium	1. Site Driving 2. Airport/ hotel/ site round trips 3. Hauling clean soil 4. Hauling impacted soil 5. Hauling armor rock	1. Drivers will comply the CEMC Motor Vehicle Safety (MVS) Process. 2. Comply with Site Transportation Safety Plan and JMPs for truck haul routes. 3. Post traffic control signs and follow site speed limits. 4. If possible make the first move forward move front. 5. Site drivers to complete defensive driving training per CEMC requirements. 6. CDL plus required endorsements when driving on public roads and vehicle >=20,000 lbs GVWR. 7. Fence off bluff road. 8. Construct berms along road edge. 9. Grade slopes for safe driving.
Truck Tip-Over (Gravity, motion)	1. High	1. Dumping rock and soils	1. Provide flat, stable surfaces for dumping of rock and soils. 2. Equipment operators or ground personnel to spot trucks into position before dumping. 3. Distribute loads evenly in truck beds.
Falls from Heights (Gravity, motion) (Biological), (Sound)	1. High 2. High 3. High 4. High	1. Working near existing sheet piling 2. GWRS removal 3. Getting on or off equipment	1. Follow Fall Protection Plan 2. Fall protection training. 3. Fence off 6 feet back from leading edge of sheet pile when working in this area. 4. Fence or cone off trench areas. 5. Provide minimum 1.5 to 1 sloping of excavations. 6. Daily excavation inspections by

Physical Hazard, and Associated Energy Source	Hazard Ranking (High, Medium, Low)	Related Tasks	Controls/PPE
		4. Working near edges of slopes	competent person. 7. Three points of contact when mounting/dismounting equipment, clean steps, tracks, hand rails
Falls to Same Level (Gravity), (Motion), (Biological)	1. High 2. Medium	1. Survey (Soils, Rock, Slopes) 2. General foot traffic	1. Follow General Safety Rules 2. Working off 1 ½ : 1 minimum slopes 3. Avoid walking on armor rock 4. Demarcate hoses and other trip hazards, or remove
Excavations (Falling into, cave ins, entrapment (Biological), (Gravity) (Motion)	1. High	1. Overburden Removal	1. Follow Excavation and Trenching Plan. 2. Excavation competent person, daily inspection 3. Proper sloping, shoring 4. Barricades (people, equipment) 5. No personnel entry into excavations without authorization of competent person. 6. Monitor earthen cuts for signs of instability.
Electrical Shock (Biological), (Electrical)	1. High 2. High	1. Installation of power supply to fuel pump in fuel area 2. Working around overhead power lines in ASRC dock facility	1. Site electrician to install all electrical supply systems other than temporary power cords 2. No equipment or equipment attachments within 15ft. of overhead utilities.
Fire/Explosion (Biological), (Pressure) (Chemical), (Temperature)	1. High 2. High	1. Cutting, torch work 2. Fueling	1. Follow Fire Prevention and Protection Plan and Welding and Cutting Plan 2. Hot work permit and fire watch 3. Turn equipment off and cool down before fueling 4. PPE as required in HASP Section 8.0
Laceration/Punctures (Biological)	1. High 2. Medium 3. Medium	1. Sharp metal edges (e.g. sheet pile) 2. Handling materials	1. Wear Kevlar gloves when handling sharp edged materials. 2. Wear high-vis leather gloves when handling materials. 3. Open blade knives prohibited.
Work Near Water (Gravity) (Biological)	1. High 2. High	1. Cell excavation	1. Follow Working Near Water Plan, including wearing of PFD's, life rings, etc. when working within 6 ft. of St. Joe River. 2. Follow allowable in-water work schedule. 3. Follow soils removal and backfill schedule to avoid flooding of work areas.

Physical Hazard, and Associated Energy Source	Hazard Ranking (High, Medium, Low)	Related Tasks	Controls/PPE
Elevated Materials (Biological), (Gravity) (Motion)	1. High 2. High	1. Material falling off haul trucks 2. Loading, unloading rock to/from haul trucks	1. Prepare lift plans for all lifts involving rigging equipment in accordance with Hoisting and Rigging Guidelines. 2. If using excavator as crane, develop lift plan and checklist and ensure operator and rigger training. 3. Keep ground crews well clear of rock loading/unloading activities. 4. Check loads for load stability before leaving load site. 5. Develop JLAs that address specific unloading hazards
Pressure hazards (Biological), (Pressure) (Chemical), (Temperature)	1. Medium 2. Medium	1. Ruptured hydraulic hoses 2. Pumping wastewater	1. Equipment planned preventative maintenance. 2. Inspection and maintenance of hoses and hose connections.

10.4 Analysis of Key Environmental/Biological Hazards

Specific biological hazards anticipated at this site are listed below.

Environmental/Biological Hazard	Hazard Ranking (High, Medium, Low)	Related Tasks	Controls/PPE
Petroleum hydrocarbon release to environment	1.High 2.High 3.High 4. High 5. High 6. High 7. High	1. Fueling 2. Off-loading trucks using heavy equipment (hydraulic fluids). 3. Petroleum impacted soils exposed to rain or sea. 4. Pumping contaminated water 5. Contaminated soil spills from trucks 6. Contaminated rain water leaking from back of parked haul trucks	1. Provide containment systems and spill kits at fueling areas, unloading docks. 2. Provide spill kits on heavy equipment. 3. Cover exposed impacted spoils at end of day, during rain event. 4. Provide spill pans under hose couplings and under parked haul truck tailgates. 5. Do not overload trucks hauling contaminated materials. 6. Follow decontamination plan in section 11.0 of this HASP.

Environmental/Biological Hazard	Hazard Ranking (High, Medium, Low)	Related Tasks	Controls/PPE
		7. Tracking contaminated materials into clean zones.	
Heat Stress	Low	All tasks in summer months	1. Frequent breaks based on intensity of labor and attire. 2. Drink plenty of fluids.
Cold Stress	Medium	Working outside in cooler months	1. Provide warm up areas. 2. Wear warm, layered clothing.
Noise	Medium	Working in or next to operating equipment	Wear hearing protection in equipment cab when windows or doors are open. Wear hearing protection when standing within 10 feet of operating equipment.
Severe Weather/lightning	Moderate	Outdoor activities	Take cover, remain indoors.

10.5 Chemicals to be Brought on Site

The following chemicals are expected to be brought on site as part of the scope of work. Material Safety Data Sheets (MSDS) will be obtained prior to the use of the chemical, and will be readily available in hard copy on site.

Chemical Name	Amount	Location	Purpose
Assorted oils, lubricants, antifreeze, fuels, petroleum distillates	Various	Mechanic's truck Flammable storage cabinet for flammables	Equipment maintenance

11.0 Decontamination Procedures

Decontamination will be necessary to remove chemicals of concern from personnel, sampling equipment, and/or heavy equipment following contact with impacted media during sampling or remediation tasks.

11.1 Decontamination Facilities and Equipment

Portable decontamination areas may be established. Decontamination facilities for the site may consist of the following:

☒ 2,000 gallon petroleum contaminated purge water storage tank west of the field office

☒ Drums and/or roll-off boxes for disposition of soil and waste solids generated during decontamination

☒ Wash and rinse buckets and/or tubs to decontaminate PPE, sampling equipment,

and sampling utensils

☒ Washroom facilities for personal hygiene following gross decontamination of equipment and utensils

11.2 Personnel Decontamination

Personnel decontamination will be conducted in a manner which minimizes the potential for hazardous skin or inhalation exposure and cross-contamination. Personnel decontamination will consist of the following steps within the CRZ:

- Removal of gross impacted media from PPE via wash tub with industrial detergents or physical means
- Removal of outer PPE in a manner that does not further distribute impacted material or inner PPE
- Placement of outer PPE in disposal containers

Following departure from the CRZ, inner PPE will be removed for placement in disposal containers and personal hygiene conducted in the support zone

11.3 Equipment Decontamination

Tools, equipment, and machinery from the Exclusion Zone or CRZ are decontaminated in the CRZ prior to removal to the Support Zone. Heavy equipment and tools will be decontaminated using steam cleaners or pressure washers. Truck tires will be washed or otherwise cleaned prior to departure from the site if exposed to contaminated soil. Sampling utensils will be washed in buckets using industrial detergents and double rinsed with distilled water.

11.4 Disposition of Decontamination Wastes

Solid wastes and discarded PPE generated during decontamination will be containerized and managed with other investigation-derived or remediation wastes generated during site activities.

11.5 Effectiveness of Decontamination

The effectiveness of personnel and heavy equipment decontamination will be assessed by the PSHSO based on visual inspections of personnel equipment following pressure washing and personnel following PPE removal and detergent wash. The effectiveness of sampling utensil decontamination will be assessed via review of laboratory analytical data quality, including blanks and rinsate samples.

12.0 Waste Management

12.1 Solid Waste

Solid wastes that could potentially be generated on site include petroleum-impacted soil, sorbent pads, PPE, and general refuse. Gross impact will be rinsed from impacted PPE such as Tyvek and Nitrile gloves, and therefore will be disposed of as general refuse. Saturated sorbent pads where there may be free oil will be segregated from general refuse and handled in the same manner as petroleum-impacted soils.

Petroleum-impacted soil from site investigation and excavation will be trucked to the northwestern area of the site where a stockpile will be constructed. Soil will be accumulated and then transported to a certified landfill.

12.2 Liquid Waste

Liquid wastes to be generated on site include decontamination and groundwater. Contaminated water will be discharged to the onsite treatment system. The water will be treated to the required levels for discharge back into the St Joe River.

13.0 Site and Traffic Control

Site control measures

Location	Site Control Procedure (discuss important elements such as signs, barricades, fencing, briefings, sign-in/out logs, etc.)
Site wide	▪ Site speed limits are 20 mph or less ▪ Equipment lay down yard will be marked with T-Posts, rope, and yellow caution tape. ▪ Fueling area will be lined and bermed and marked with cones, ropes, and yellow caution tape. ▪ Employees will sign in before going into the field, will sign out for lunch or if they leave the site, and will sign out at the end of the day. The sign in sheet is to be kept in the PPM Office. ▪ All Vendors entering the site and Visitors will sign in and sign out. The visitor escort will ensure that the sign in/ out sheet has been signed.

13.1 Site Control Measures

13.1.1 Site Map

A site map showing evacuation routes, assembly areas, locations of emergency response equipment, and decontamination areas is located at the field office which is updated routinely to show the location of each work group.

13.1.2 Lone Worker Safety Procedures

To provide an effective means of communication between a single field team member and the project management group, site Lone Worker Safety Procedures will be established by the Project Manager. The primary consideration is the type of activities that will be performed that could result in exposure to an incapacitating situation. ***If there are no actual or potential exposures to hazards that would incapacitate the individual, then Lone Worker Safety Procedures are acceptable.*** The lone worker must notify the Project Manager, by phone, prior to going to the site. The lone worker must describe where they will be working, what tasks they will be performing and when they anticipate being done for the day. Once the lone worker returns to their home a call will be placed to the Project Manger notifying their return.

13.1.4 Work Zone Access

The work zone is defined as the area within a 30-foot radius of persons working in the area. Barricades and other entry restricting equipment will be used at the discretion of the Project

Manager or PSHSO to prevent the work zone entry of unauthorized personnel. Only authorized personnel will be permitted to enter the work zone. Authorized personnel will include those who have duties requiring their presence in the work zone. The PPM Project Manager has the right to require unauthorized personnel to exit the work zone.

Considerations for pedestrian and vehicle traffic control will be included in the JLA when the potential exists for pedestrian and/or vehicular traffic to pass through or nearby the work zones. Traffic controls will provide: pedestrian/vehicle diversions around or away from the work zones; clear guidance through the diversion; and methods to prevent pedestrian/vehicle/work zone interaction that could result in incidents.

14.0 Other Safety Plans

14.1 Heat/Cold Stress Monitoring Plan

14.1.1 Heat Monitoring Plan

High temperature and humidity, physical exertion and lack of sufficient water intake can lead to heat-related stress. Symptoms of heat exhaustion or heat stroke include confusion, irrational behavior, loss of consciousness, abnormally high body temperature and hot dry skin. PPM advises workers to take preventive measures such as reducing physical exertion and wearing light, loose-fitting clothing. PPM provides workers with water and regular rest periods in a cool recovery area.

Superintendents, foremen, and managers must monitor workers who are at risk of heat stress, such as those wearing semi-permeable or impermeable clothing when the temperature exceeds 70°F, while working at high energy levels. Personal monitoring can be done by checking the heart rate, recovery heart rate, and oral temperature. The two major risk items caused by working in warm weather can be attributed to the sun and the heat. The following two sections will discuss the effects of the sun and heat on employees and suggested actions to avoid exposure to each risk.

Sun

Sunlight contains ultraviolet (UV) radiation, which causes premature aging of the skin, wrinkles, cataracts, and skin cancer. There are no safe UV rays or safe suntans. Be especially careful in the sun if you burn easily, spend a lot of time outdoors, or have any of the following physical features: numerous, irregular, or large moles; freckles; fair skin; or blond, red, or light brown hair.

Here's how to block those harmful rays:

- Cover up. Wear loose-fitting, long-sleeved shirts and long pants.
- Use sunscreen with a sun protection factor (SPF) of at least 30. Be sure to follow application directions on the bottle or tube.
- Wear a hat. A wide brim hat, not a baseball cap, works best because it protects the neck, ears, eyes, forehead, nose, and scalp.
- Wear UV-absorbent sunglasses (eye protection). Sunglasses don't have to be expensive, but they should block 99 to 100 percent of UVA and UVB radiation. Before you buy sunglasses, read the product tag or label.
- Limit exposure. UV rays are most intense between 10 a.m. and 4 p.m.
- Additional Information is available at: www.osha.gov/Publications/osha3166.pdf

Heat

The combination of heat and humidity can be a serious health threat during the summer months. If you work outside (for example, at a construction site) you may be at increased risk for heat related illness. So, take precautions.

Here's how:

- Drink small amounts of water frequently.
- Wear light-colored, loose-fitting, breathable clothing—cotton is good.
- Take frequent short breaks in cool shade.
- Eat smaller meals before work activity.
- Avoid caffeine and alcohol or large amounts of sugar.
- Work in the shade.
- Find out from your health care provider if your medications and heat don't mix.
- Know that equipment such as respirators or work suits can increase heat stress.
- There are three kinds of major heat-related disorders—heat cramps, heat exhaustion and heat stroke.

Recommended PPE for working in Warm Weather:

- Reflective clothing, worn as loosely as possible, can minimize heat stress hazards.
- Wetted clothing, such as terry cloth coveralls or two-piece, whole-body cotton suits are another simple and inexpensive personal cooling technique. It is effective when reflective or other impermeable protective clothing is worn.
- Water-cooled garments range from a hood, which cools only the head, to vests and "long johns," which offer partial or complete body cooling. Use of this equipment requires a battery-driven circulating pump, liquid-ice coolant, and a container.

Administrative or work practice controls to offset heat effects:

- Acclimatize workers by exposing them to work in a hot environment for progressively longer periods.
- Replace fluids by providing cool water or any cool liquid (except alcoholic and caffeinated beverages) to workers and encourage them to drink small amounts frequently, e.g., one cup every 20 minutes. Ample supplies of liquids should be placed close to the work area.
- Reduce the physical demands by reducing physical exertion such as excessive lifting, climbing, or digging with heavy objects. Use relief workers or assign extra workers, and minimize overexertion.
- Provide recovery areas such as air-conditioned enclosures and rooms and provide intermittent rest periods with water breaks.
- Reschedule hot jobs for the cooler part of the day, and routine maintenance and repair work in hot areas should be scheduled for the cooler seasons of the year.

14.1.2 Cold Monitoring Plan

Prolonged exposure to freezing, or near freezing, temperatures can result in health problems as serious as trench foot, frostbite, and hypothermia. Workers in such industries as construction, commercial fishing and agriculture need to be especially mindful of the weather, its effects on the body, proper prevention techniques, and treatment of cold-related disorders.

An individual gains body heat from food and muscular activity and loses it through convection, conduction, radiation and sweating to maintain a constant body temperature. When body temperature drops even a few degrees below its normal temperature of 98.6°F (37°C), the blood

vessels constrict, decreasing peripheral blood flow to reduce heat loss from the surface of the skin. Shivering generates heat by increasing the body's metabolic rate.

The four environmental conditions that cause cold-related stress are low temperatures, high/cool winds, dampness and cold water. Wind chill, a combination of temperature and velocity, is a crucial factor to evaluate when working outside. For example, when the actual air temperature of the wind is 40°F (4°C) and its velocity is 35 mph, the exposed skin receives conditions equivalent to the still-air temperature being 11°F (-11°C)! A dangerous situation of rapid heat loss may arise for any individual exposed to high winds and cold temperatures.

Major Risk Factors for Cold-Related Stresses

- Wearing inadequate or wet clothing increases the effects of cold on the body.
- Taking certain drugs or medications such as alcohol, nicotine, caffeine, and medication that inhibits the body's response to the cold or impairs judgment.
- Having a cold or certain diseases, such as diabetes, heart, vascular, and thyroid problems, may make a person more susceptible to the winter elements.
- Being male increases a person's risk to cold-related stresses. Sad, but true, men experience far greater death rates due to cold exposure than women, perhaps due to inherent risk-taking activities, body-fat composition or other physiological differences.
- Becoming exhausted or immobilized, especially due to injury or entrapment, may speed up the effects of cold weather.
- Aging -- the elderly are more vulnerable to the effects of harsh winter weather.

Preventing Cold-Related Disorders

Personal Protective Clothing is perhaps the most important step in fighting the elements is providing adequate layers of insulation from them. Wear at least three layers of clothing:

- An outer layer to break the wind and allow some ventilation (like Gore-Tex® or nylon).
- A middle layer of wool or synthetic fabric (Qualofil or Pile) to absorb sweat and retain insulation in a damp environment. Down is a useful lightweight insulator; however, it is ineffective once it becomes wet.
- An inner layer of cotton or synthetic weave to allow ventilation.

Pay special attention to protecting feet, hands, face and head. Up to 40 percent of body heat can be lost when the head is exposed. Footgear should be insulated to protect against cold and dampness. Keep a change of clothing available in case work garments become wet. Engineering Controls in the workplace through a variety of practices help reduce the risk of cold-related injuries.

- Use an on-site source of heat, such as air jets, radiant heaters, or contact warm plates.
- Shield work areas from drafty or windy conditions.
- Provide a heated shelter for employees who experience prolonged exposure to equivalent wind-chill temperatures of 20°F (-6°C) or less.
- Use thermal insulating material on equipment handles when temperatures drop below 30°F (-1°C).

Cold Weather Administrative Controls

Safe Work Practices, such as changes in work schedules and practices, are necessary to combat the effects of exceedingly cold weather.

- Allow a period of adjustment to the cold before embarking on a full work schedule.

- Always permit employees to set their own pace and take extra work breaks when needed.
- Reduce, as much as possible, the number of activities performed outdoors. When employees must brave the cold, select the warmest hours of the day and minimize activities that reduce circulation.
- Ensure that employees remain hydrated.
- Establish a buddy system for working outdoors.
- Educate employees to the symptoms of cold-related stresses -- heavy shivering, uncomfortable coldness, severe fatigue, drowsiness, or euphoria.

The quiet symptoms of potentially deadly cold-related ailments often go undetected until the victim's health is endangered. Knowing the facts on cold exposure and following a few simple guidelines can ensure that this season is a safe and healthy one

14.2 Critical Lift Plan

A critical lift plan will be applicable if one or more of the following conditions exist:

- Hoisting hazardous materials.
- Hoisting personnel.
- Multiple Crane lifts.
- Lifts where the center of gravity could change.
- Lifts the operator considers critical.
- Lifts made within 75% of the rated capacity of the crane.
- Lifts without the use of outriggers using rubber tire load charts.
- Lifts using more than one hoist on the same crane or trolley.
- Lifts using non-routine or technically difficult rigging.
- Lifts involving submerged loads.
- Lifts out of the operator’s view.

14.3 Contingency Plan for Severe Weather

Weather forecasts will be monitored on a daily basis. This project will be completed in the spring and summer months and we do not anticipate any unusually severe weather.

14.3.1 High Winds

All material susceptible to blowing around, such as tarps, plastic, and plywood will be secured. No one will be allowed downwind of non-secured material. If high winds are forecasted during the time frame of the pile removal activities, we will wait until the winds are favorable for continuing operations.

14.3.2 Thunderstorms

Cease crane/excavator operations if thunderstorms are in the area. Stay clear of cranes or other objects that might conduct lightning. Secure items that might be blown about by high wind gusts. Be particularly aware of objects that may blow off shed roofs.

If lightening observed, suspend operations when lightening is within 30 seconds of the site. Remain inside during lightning activities. Seek shelter until at least 30 minutes after last lightning is observed.

14.4 Site Specific Fall Protection and Prevention Plan

Understanding the bottom line of fall protection is simple: When working over dangerous equipment and machinery fall protection must be provided, regardless of the industry and fall distance.

Fall protection must be provided at:

- **Four feet -** In general and construction industry.
- **Five feet -** In maritime.
- **Six feet -** In concrete work on vertical surfaces and hazardous slopes in construction.
- **Ten feet -** In construction: For roofing and leading edge work and *surfaces that by definition are not walking or working surfaces.*

Any time a worker is working or walking in the circumstances above:

- A standard railing must be in place, or
- The worker must be tied off, or
- Other fall protection system must be in place

Effectively implementing a fall protection plan is anything but simple. For example: when safety lanyards connected to harnesses are used as the primary means of fall arrest, in most cases TWO lanyards must be in use in order to assure that at least one lanyard remains attached while the second is being reconnected as a worker changes positions.

Each job must have a fall protection plan completed for it, listing specific fall hazards and the steps to be implemented to prevent falls. Fall protection plans can be very simple (for those jobs that hold very limited exposure to falls) or very complex (when workers are exposed to the hazards of bridge decks, unfinished buildings and roof edges).

While the office will provide a written fall protection plan for most jobs, there will inevitably be situations (particularly related to the smaller one and two-day type jobs) where there will be no plan available from the office. For these situations, the job foreman will be responsible for having a written plan available at the job-site. Furthermore, it will always be the job foreman's duty to thoroughly understand the methods of fall protection and when to use them.

The following pages contain fall protection plan forms. Foremen should be prepared to complete them. Crewmembers should understand the requirements and insist on working fully protected at all times.

14.5 Excavation/Trenching Plan

All excavation, trenching and shoring requirements shall meet the intent of the Safety Standards for Construction Work. Some of the more common requirements are:

1. Slopes should be built for all excavations, except in solid rock.
2. Materials must be placed two (2) feet or more from the edge of the excavation. Precautions must be taken to prevent such materials from falling into the excavation.
3. Trenches four (4) feet or more in depth must be shored or sloped using 29CFR 1926.650-652. Any excavation in unstable soil may require shoring or sloping.

4. Each excavation must be inspected daily by the responsible SS or foreman. If evidence of cave-ins or slides is apparent, all work in the excavation must cease until necessary precautions have been taken to safeguard employees.
5. Where vehicles or equipment operate near excavations or trenches, the side of the excavation must be shored or braced, as necessary, to withstand the forces exerted by the superimposed load. Also, stop logs or other substantial barricades must be installed at the edge of such excavations.
6. Materials used for sheeting, shoring or bracing must be in good condition. Timbers must be sound, free of large or loose knots and of adequate dimension.
7. Employees working in bell-bottom pier holes must be protected by a substantial casing, which extends the full depth of the shaft. When working in such holes, a shoulder harness, which is secured to a lifeline and tended full time, must be worn.
8. Safe access must be provided into all excavations by means of ladders, stairs or ramps.
9. Trenches four (4) feet or more in depth must have ladders spaced so that lateral travel does not exceed twenty-five (25) feet. Such ladders must extend at least three (3) feet above grade. Employees shall not be exposed to un-shored or un-sloped excavation during access and egress.
10. Walkways or bridges with standard guardrails must be provided where employees or equipment are required or permitted to cross over excavations or trenches.
11. In locations where oxygen deficiencies or concentrations of hazardous explosive gases or dusts are possible, the atmosphere in the excavation must be tested by the Safety Supervisor prior to the start of work and at intervals, as required. When such conditions exist or may develop, emergency rescue equipment must be kept readily available.
12. When possible, the area adjacent to the excavation, opposite the spoil side, shall be sloped away from the excavation to prevent entrance or surface water.
13. All open excavations four (4) feet or greater in depth shall be barricaded or otherwise cordoned off to prevent traffic and employees from inadvertently driving or falling into the excavation.

14.6 Hearing Conservation

Permanent hearing loss is a proven result of prolonged exposure to high noise levels. An easy manner of determining a noise level in excess of the threshold is to determine whether a conversation is possible at normal voice levels. If not, then the threshold has probably been exceeded and you should be wearing hearing protection. What is less easy, is determining whether the average exposure, over an eight-hour shift, is being exceeded. This is especially true because our work, unlike that in a factory, is constantly changing from day to day, as well as during work shifts. Therefore, whenever you are working in a situation where the noise level prevents conversation at normal speech levels, you must wear hearing protection.

General

Certain tasks during the working day expose employees to industrial noise levels in excess of 85 db. It is possible that noise exceeds this level when averaged over an eight-hour period. An employee working under these conditions shall be incorporated into the Hearing Conservation Program.

Exposure Areas

Exposure to such noise levels may occur anywhere on the job site except within the office.

Audiometric Exam

All employees exposed to *85 dB or greater, averaged over an eight-hour period* ("Program Threshold"), shall receive annual audiometric exams administered by a qualified individual. These exams shall be given at no cost to the employee. Test results shall be available for employee review.

Ear Protection

At least two types of hearing protection shall be available to all employees exposed to a noise level in excess of the program threshold. Every such employee shall wear hearing protection during all periods when exposed to any level of industrial noise. Failure to do so shall result in disciplinary action.

Training

All employees exposed to industrial noise levels in excess of the program threshold shall be given annual training in hearing conservation. The training shall include:

1. The effects of noise on hearing, temporary threshold shift and permanent threshold shift
2. Purposes of hearing protection, including use, fitting and advantages/disadvantages of various types; care of protectors; and attenuation characteristics
3. The purpose of audiometric testing
4. The right to access records on audiometric tests and training materials

Records

PPM will retain files of audiometric test results and of training programs.

Noise Level Monitoring

Noise levels and employee exposure will be periodically monitored at the workplace.

14.7 Bloodborne Pathogens Program - Exposure Control Plan

Cuts and scrapes are constant occurrences in the construction industry. Additionally, an employee may occasionally need to administer first aid to a fellow worker. These instances may result in employee exposure to very serious diseases carried in the blood, including HIV and Hepatitis-B.

The Bloodborne Pathogen Program, when observed by all employees, provides protection from infection. Employees need to understand what the dangers are, what procedures must be followed, what personal protection equipment is available, where the equipment can be located if needed and the procedures to follow in case of inadvertent exposure.

Exposure Determination

It has been determined that the following job classifications, tasks and procedures exist in which all or some employees at PPM may incur occupational exposure to blood or other potentially infectious materials. Employee exposure to bloodborne pathogens is limited to instances that could occur during the rendering of first aid to an injured fellow worker.

Job Classifications

- Administrative Personnel
- Piledrivers & Carpenters
- Operating Engineers

Tasks and Procedures

- Administration of first aid; contact with blood or other infectious materials resulting from worker injury

Compliance Methods

1. All blood or other potentially infectious material will be considered infectious, regardless of the perceived status of the source individual. All reasonable precautions will be taken to prevent contact with blood or other potentially infectious materials.
2. Work practice controls will be utilized to minimize exposure to employees at this facility. Personal protective equipment will be utilized when exposure remains despite the existence of work practice controls. The following work practice control will be employed at PPM.
   a. Personnel will read, understand and adhere to the requirements of the PPM Accident Prevention Program, including Safe Work Practices provisions.
3. Supervisors, foremen and the HSO will be responsible for ensuring:
   a. That after removal of personal protective gloves, employees shall wash hands and any other potentially contaminated skin area immediately, or as soon as feasible, with soap and water.
   b. If employees incur exposure to their skin or mucous membranes, then those areas shall be washed or flushed with water as soon as feasible following contact.
4. Needles and re-usable sharps

   Not applicable to this program
5. Work Area Restrictions

   Not applicable to this program
6. Specimens

   Not applicable to this program
7. Contaminated Equipment
   a. The foreman or supervisor at the scene shall be responsible for ensuring that tools or equipment that become contaminated with blood or other potentially infectious material, shall be examined prior to re-use, servicing or shipping and shall be decontaminated as necessary, unless decontamination of the equipment is not feasible.
8. Personal Protective Equipment (PPE)
   a. PPM ensures that all PPE, used in conjunction with this program, is provided at no cost to employees. PPE will be chosen based on anticipated exposure to blood or other potentially infectious material.
   b. The foreman must ensure that any assisting employee uses appropriate PPE. However, the employee may temporarily and briefly decline to use PPE when, under rare and extraordinary circumstances, it is the employee's professional judgment that in the specific instance its use would prevent the delivery of health care or pose an increased hazard to the safety of the worker or co-worker. When the employee makes this judgment, the circumstances shall be investigated and documented in order to determine whether changes can be instituted to prevent such occurrences in the future.
   c. The PPE to be used during such occasions will consist of disposable latex or vinyl gloves and disposable CPR masks. These items will be readily accessible and kept in the same locations as first aid kits.

d. All used PPE will be placed in an appropriate container for disposal immediately after use.

9. Housekeeping

   Not applicable to this program

10. Regulated Waste Disposal

    a. Any PPE that has been contaminated by blood, or other potentially infected material, shall be deposited in a closable, leak-proof container and labeled as 'biohazard'. Such containers will be transported carefully to the PPM office for disposal according to applicable federal, state and local regulation.

11. Laundry Procedures

    Not applicable to this program

12. Post-exposure Evaluation and Follow-up

    a. All exposure incidents shall be reported, investigated and documented. When an employee incurs an exposure incident, it shall be immediately reported to the foreman. The information shall be forwarded to the office HSO on the same day as the exposure occurs.

    b. The HSO shall be responsible for arranging for all post-exposure follow-up procedures. Following a report of an exposure incident, the exposed employee, at no cost to him/her, shall immediately receive a confidential medical evaluation and follow-up, including at least the following elements.

       i. Hepatitis B Vaccination. If the employee initially declines Hepatitis B vaccination, but at a later date, while still covered under the standard, the vaccination shall then be made available. All employees who decline the Hepatitis B vaccination offered shall sign the OSHA-required waiver indicating their refusal. The waiver shall read as follows:

          "I understand that, due to my occupational exposure to blood or other potentially infectious materials, that I may be at risk of acquiring Hepatitis B virus (HBV) infection. I have been given the opportunity to be vaccinated with Hepatitis B vaccine, at no charge to myself. However, I decline Hepatitis B vaccination at this time. I understand that by declining this vaccine, I continue to be at risk of acquiring Hepatitis B, a serious disease. If, in the future, I continue to have occupational exposure to blood or other potentially infectious materials and I want to be vaccinated with Hepatitis B vaccine, I can receive the vaccination series at no charge to me."

       ii. Documentation of the route of exposure and the circumstances under which the exposure incident occurred.

       iii. Identification and documentation of the source individual, unless it can be established that identification is unfeasible or prohibited by state or local law. The source individual's blood shall be tested as soon as feasible after consent is obtained in order to determine HBV and HIV infectivity. If consent is not obtained, the HSO shall establish that legally required consent cannot be obtained. When the source individual's consent is not required by law, the source individual's blood, if available, shall be tested and the results documented. *When it is known that the source individual is already infected with HBV or HIV, testing for the source individual's known HBV or HIV status need not be repeated.*

Results of the source individual's testing shall be made available to the exposed employee and the employee shall be informed of applicable laws and regulations concerning disclosure of the identity and infectious status of the source individual.

- Collection and testing of any exposed employee's blood for HBV and HIV serological status will comply with the following:

  The exposed employee's blood sample shall be collected as soon as feasible and tested, after consent is obtained. If the employee consents to baseline blood collection, but does not give consent at that time for HIV serological testing, the sample shall be preserved for at least 90 days. If, within 90 days of the exposure incident, the employee elects to have the baseline sample tested, such testing shall be done as soon as feasible.

- All employees who incur an exposure incident will be offered post-exposure evaluation and follow-up including post-exposure prophylaxis, when medically indicated, as recommended by U.S. Public Health Service, counseling and evaluation of reported illnesses.

- Information provided to the Health Care Professional

  The HSO shall ensure that the health care provider responsible for an employee's Hepatitis B vaccination or for evaluating an employee after an exposure incident is provided with a copy of the 29 CFR 1910.1030 Bloodborne Pathogen Standard. Furthermore, in the case of an exposure incident, the employer shall provide the health care individual with a description of the exposed employee's duties, as they relate to the exposure incident, documentation of the route(s) of the exposure and circumstances under which exposure occurred, results of the individual's blood testing, if available, and all medical records relevant to the appropriate treatment of the employee, including vaccination status, which are the employer's responsibility to maintain.

- Health Care Professional's Written Opinion

  The evaluating health care professional's written opinion shall be obtained by the HSO who shall provide the affected employee with a copy within 15 days of the completion of the evaluation.

  The health care professional's written opinion for HBV vaccination shall be limited to the following information:

  A statement that the employee has been informed of the evaluation and a statement that the employee has been told about any medical conditions resulting from exposure to blood or other potentially infectious materials that require further evaluation or treatment. Note that all other findings or diagnoses shall remain confidential and shall not be included in the written report.

13. Labels and Signs
    a. The HSO shall ensure that "universal biohazard symbol" labels be affixed to containers of regulated wastes.
14. Information and Training
    a. The HSO shall ensure that training is provided at the time of initial assignment to tasks where occupational exposure may occur and that it shall be repeated within twelve months of the previous training. Training shall be tailored to the education and language of the employees, shall be open for questions and answers between the employees and the trainer and shall include an explanation of this program and the following topics:

i. A copy of the 29 CFR 1910.1030 Bloodborne Pathogen Standard and an explanation of its contents
ii. A general explanation of the epidemiology and symptoms of bloodborne disease
iii. An explanation of the modes of transmission of bloodborne pathogens
iv. Recognition of the tasks that may involve exposure
v. An explanation of the use and limitations of methods to reduce exposure (personal protective devices & work practices)
vi. Information on use, location, removal, handling, decontamination and disposal of exposed PPD's
vii. Information on Hepatitis B vaccination: efficacy, safety, method of administration, benefits and that it will be administered free of charge
viii. Information on the appropriate actions to follow if an exposure incident occurs, including method of reporting and medical follow-up
ix. Information on the evaluation and follow-up required after an employee exposure incident
x. An explanation of the signs, labels and color coding systems

15. Record Keeping

a. Medical Records

The HSO will maintain an accurate medical record for each employee with occupational exposure in accordance with WAC 296-823-17005. The record shall include:

i. Employee name and social security number
ii. Copy of the employee's Hepatitis B vaccination status, including the dates of all HBV vaccinations and any medical records relative to the employee's ability to receive vaccinations.
iii. The employer's copy of the health care professional's written opinion
iv. A copy of the information provided to the health care professional
v. The HSO shall ensure that medical records are kept confidential and not disclosed or reported, without the employee's express written consent, to any person within or outside the workplace except as required by this section or as may be required by law
vi. PPM shall maintain these records for at least the duration of the employment PLUS 30 YEARS, as required by WAC 296-802-20010

b. Training Records

Training records shall include the following information:

i. Dates of training sessions
ii. Summary or contents of training sessions
iii. Names and qualifications of persons conducting training
iv. Names and job titles of persons attending
v. Training records shall be kept for a minimum of three years from the date training occurred

c. Availability

i. Training records shall be made available to the director, employees and employee representatives, upon request

ii. Medical records shall be made available to subject employees, persons holding written consent of the subject employee and to any State Labor Authority

iii. If this facility is closed, or there is no successor facility to receive and retain the records for the prescribed period, the Director of NIOSH shall be contacted for final disposition

16. Annual Evaluation and Review

The PPM HSO is responsible for reviewing this program annually, maintaining the program's effectiveness and updating this program as needed.

14.8 Flex N Stretch

PPM requires crews to perform Flex N Stretch daily, prior to commencing work. It is recommended to be performed at or during its daily safety meetings. The goals of Flex N Stretch are:

- Reduce Sprains and Strains.
- Get the blood flowing to start the day.
- Since the focus of Flexstretch is safety this is a chance to have a mini safety meeting.
- Stretch time is probably the only time of day that the whole group will be together. It is a good time for a quick talk to communicate the day's goals.
- Everyone will start the day on time. The group will notice any late stragglers.
- Do all this in five minutes or less. It can be done.

14.9 Fatigue

Worker fatigue can be a factor in incidents or risk to personnel. When fatigued, workers should notify their supervisor and handle their fatigue appropriately. PPM is responsible for monitoring employee activities and behavior to determine if an employee should be removed from the work site to obtain rest or should be given a rest period upon arriving at the work site before beginning work.

The following guidelines should be considered regarding worker fatigue:

b. Workers should be limited to 12 to 14 planned work-hours per day and are not to exceed 16 hours per day, including travel.
c. After two consecutive, 16 work-hour days, workers will be allowed eight hours of an uninterrupted rest/sleep period.

14.10 Back Safety / Lifting Policy

Employees must not lift loads over 50 pounds. The employee must determine whether assistance is needed to lift lighter weights.

Before lifting, determine the following:

- Can a mechanical device move the object?
- Is the object bulky?
- Will it obscure vision? If so, get another person to help carry it.
- Is the object within the employee's capability to lift?
- Is the walking surface free of obstructions?
- Use proper lifting procedure:
  - Bend legs at the knees.
  - Keep the back nearly vertical.
  - Position the body as close to the object as possible.
  - Place feet apart, but no more than shoulder width.
  - Firmly grasp the object and straighten the legs.
  - Keep the back straight and upright.
  - Pull the object close to the body, leaning back slightly to keep the center of gravity over the feet.
  - Avoid twisting the body when lifting or carrying loads.
  - When handling material with others, teamwork is important.
  - Agree on who will be the leader, and give signals to indicate instructions.
  - Release the materials only when everyone is ready.

14.11 Environmental Tobacco Smoke

Since most of our employees are not office workers, the Company has adopted the following smoking policy:

1. Smoking shall be prohibited within 50 feet of flammable or combustible materials. All non-smoking signs related to such materials or other fire hazards must be obeyed.
2. Smoking is prohibited in the PPM site office/job trailers.
3. "Production areas" (shop, outdoors, decks, boats, etc.) are excluded from these regulations, except for item #1. No smoking in the warehouse, conex, or site systems trailers.
4. Smoking is only allowed in designated areas on site: next to the office building and at the designated area at the top of the bluff near the port-a-john

14.12 Explosives & Firearms

PPM prohibits the use, possession, transportation, or sale of unauthorized explosives, unauthorized flammable materials, firearms, or other weapons while on company premises, engaged in company business, or operating company equipment.

14.13 Oxygen, Compressed Air, Flammable Gases

Compressed gases and their containers are killers when used improperly. Do not use compressed air to blow dust or dirt off clothing or body parts. *Never, under any circumstances, compressed oxygen to do so.* Not only can debris fly into your eyes or the eyes of others, it is also possible to force foreign objects into your flesh below skin level.

When compressed gases are used, all lines must be shut off at the tank after each use. All lines must be coiled and returned to a secure position immediately after use. Tanks not in use must have safety caps screwed on. All tanks must be stored in an upright position and secured with chain and rope.

Never, ever, use oxygen, MAPP, propane or acetylene cylinders when they are lying down. Cylinders shall not be used or stored in confined spaces, such as tanks, caissons, holes or other enclosures

No area is to be entered or any hot work done, without ventilating the area thoroughly if any painting, oiling or fueling has been done in the vicinity. Ventilation and testing shall be done by a competent (experienced) person.

Oxygen becomes explosive when in contact with oil or grease. Never oil or grease cylinder valves, even if sticking.

Store full and empty oxygen cylinders 20 feet away from gas cylinders. If a 20 feet separation is not maintained, gas and oxygen cylinders must be separated by a 30-minute firewall, at least 5 feet high. Store oxygen and gas cylinders in the designated area west of the warehouse on the concrete pad surrounded by protective bollards.

14.14 Housekeeping

Good onsite housekeeping is required, because tools, hoses, chokers, parts, materials and debris frequently cause tripping injuries when left haphazardly lying about. Employees shall utilize good housekeeping practices to eliminate the potential for slips, trips and falls. For example, employees will clear work areas of debris *prior* to commencement of task and take the time to put away the tools and materials *after* task is complete.

- Keep all work areas, walking surfaces, handrails, equipment, tools, and life-saving and fire-fighting equipment clean and free of obstructions.
- Store tools or tie them off, so they do not cause a hazard to people in the surrounding area.
- Use only commercial fire-safe solvents for cleaning. Prohibited cleaning agents include, but are not limited to, gasoline, diesel, and methyl ethyl ketone (MEK).
- Segregate wastes, including discarded oily rags, from regular trash.
- Trash and other combustible material will not be allowed to accumulate
- Use plastic buckets appropriately; they should not contain any hydrocarbons or flammable items.
- Properly label all containers (e.g., spray bottles, jugs) with name of substance contained.
- Materials shall be properly stored.

14.15 Working Overhead

Before working overhead, notify anyone who will be below you. Then, follow these procedures:

- Never throw hand tools or materials to anyone; hand them up or down.
- When working at heights, handle tools to prevent them from falling or being dropped.
- Take all precautions to guard against falling objects by properly identifying and mitigating hazards using the Hazard ID Tool**.**
- Barricades or other suitable safeguards should be placed below overhead work to prevent personnel from entering the area below overhead activity**.**

14.16 Ladder Safety

Following are items that should be considered and practiced regarding ladder safety.

- At a minimum, use ladders that have the industrial grade 1-A label.
- Inspect ladders for broken or cracked parts before each use.
- If the ladder is not in a safe operating condition, tag it for maintenance, and remove it from service. *Destroy all non-repairable ladders*.
- All ladders must be equipped with anti-slip safety feet.
- Check to see that pads are on the bottom of the ladder.
- Do not use ladders as scaffolding components.
- Do not use metal ladders when working with electrical equipment.
- Base of ladder must be positioned away from a perpendicular line down from the top of the ladder a distance equal to ¼ the length of the ladder.
- Tie/fasten single and extension ladders at the top.
- Ladders over 10 feet in length must be tied off at the top.
- Ladders extending to a roof or another level must extend 36 inches above the level and must be tied off.

Following are items that personnel should consider and practice in the use of ladders:

- Face the ladder while ascending or descending.
- Clean shoes before ascending or descending a ladder. Oily or debris-laden shoes cause falls from ladders.
- Allow only one person on a ladder at a time.
- If working while standing on a ladder and are more than 10 feet off the ground, you must be tied off wearing a full safety harness.
- Both hands must be free when ascending or descending a ladder. Always use hand lines for transporting materials up and down ladders.
- Do not use the top of a stepladder as a step.
- Never leave objects on ladder steps or rungs.

14.17 Power Tool Use

- Keep cutting tools sharp and all tools in good condition.
- Return them to the yard for repair when necessary and when parts become loose or lost.
- Treat the tools as if they were your own.
- Maintain tools in good condition, and replace or have defective tools repaired by qualified personnel.
- Power tools should be included in a planned maintenance program.
- Power tools should be de-energized when not in use.
- Use hand tools for their intended purpose only. For example,
  - Do not use wrenches as hammers.
  - Do not use screwdrivers as chisels or pry bars.
  - Do not use pipe wrenches on hex nuts.
  - Make sure that grinder wheels are properly rated for the speed of the grinder.
  - Obey all other relevant specifications.
- Verify that guards are in place, unaltered, and properly installed.
- Ensure that power tools are equipped with a three-wire grounded conductor cord. Use the three-pronged plug only in a three-prong service outlet.
- Verify that a ground fault circuit interrupter (GFCI) exists on outlets that are not part of permanent buildings or structures supplying power to portable electric tools.

- Most portable electrical or air-operated tools contain a motor that can generate sparks hot enough to ignite a mixture of natural gas and air. Use the facility's Hot Work Permit process to ensure that these tools are used safely.

14.18 Motor Vehicle Safety

The basic safe work requirements listed below will be followed when operating motor vehicles as part of the project:

- Drivers' licenses will be current and valid, and carried by drivers during vehicle operation.
- Seat belts will be worn by vehicle passengers in motor vehicles.
- Proof of insurance will be carried inside the vehicle during operation.
- First move forward: Drivers will park vehicles so that the initial motion of the vehicle is forward when operation is resumed.
- Get Out and Look (GOAL) will be used by all personnel at the site.
- Cellular telephones will not be used by drivers when vehicles are in motion, when the transmission is engaged, or the vehicle is in an active roadway.
- Cargo/goods transported within the passenger compartment of passenger vehicles will be secured, and items transported in flat-bed or pickup trucks will be securely fastened with brackets, bolts, or cargo nets.
- Incident reporting: motor vehicle crashes (no matter how minor) will be reported to the Project Manager or HSO, who will activate incident notification
- Fatigue management: light vehicles will not be operated for more than 12 hours within a 24 hour period, or when the operator has worked over 16 hours in a 24 hour period
- Drivers will comply with public traffic laws and ordinances

14.18.1 Vehicle Inspections and Maintenance

Vehicles assigned for use as part of the project will be maintained in accordance with manufacturers' recommendations. Daily and weekly inspections will be conducted and documented on PPM vehicle inspection forms.

14.19 Drug & Alcohol Abuse Plan

As part of the orientation, it will be stated that alcohol and drug abuse will not be tolerated on this project. Our new employees will be drug tested as part of the hiring procedure. After accidents the employees involved will undergo blood, urine, or saliva tests to see if the employees were under the influence of drugs and alcohol.

Pre-Employment Testing

1. All job applicants and personnel dispatched from unions will be required to take a pre-employment drug and alcohol screening test, as described in the section titled "Controlled Substance and Alcohol Testing Procedure".
2. The Company may waive this requirement upon verification, from an approved drug and alcohol-testing agency, that the applicant passed an equivalent test within the previous 60 days.
3. No person will be hired by the Company if the screening procedure indicates the presence of illegal drugs or alcohol.

Rehire Testing

If an employee has been laid off for more than 30 days, a drug and alcohol screening test must be performed prior to being assigned to a project.

Random Testing

On a monthly basis, employees (companywide) shall be randomly chosen for drug testing. Up to 50% of the average number of employees will be tested on an annual basis. Example: If PPM has an average of 75 employees, then there will be 37-38 random tests a year, or 3-4 employees each month.

Additional Testing

Testing may be performed on a job-by-job basis if all personnel, bargaining unit and non-bargaining unit, are treated equally.

Reasonable Cause Performance Impairment Testing

1. Employees working, or reporting for work, when they reasonably appear to be influenced by drugs, including unreported prescription drugs, will be immediately suspended and will be subject to an order to take a Reasonable Cause Performance Impairment Exam.
2. Employees involved in a serious accident, or near-accident, will be subject to an order to take a Reasonable Cause Performance Impairment Exam.
3. Failure to comply with an order to take a Reasonable Cause Performance Impairment Exam will result in termination.
4. An employee who's Reasonable Cause Performance Impairment Exam indicates the presence of illegal drugs, or an alcohol level equal to or above the Alaska State standard, will be terminated.
5. Terminated employees may re-apply for employment upon presentation of a certificate of treatment from an approved rehabilitation program. Any such applicant will be tested in the normal manner.

Confidentiality

Every effort will be made to keep the results of an employee's drug or alcohol test, and any subsequent treatment, confidential according to federal and state confidentiality laws.

Controlled Substance and Alcohol Testing Procedure

Under the terms of the PPM Controlled Substance and Abuse Policy, all employees are required to be tested for drug and alcohol use. As indicated in the Policy, testing is required as a precondition of employment for applicants, periodically for employees assigned to certain jobs, and as a consequence of certain on-the-job accidents and/or with reasonable cause to suspect an impaired condition.

Assigned personnel shall administer all alcohol or drug screening tests. A consent form must be signed by the employee before testing, listing all prescription and non-prescription medications that have been taken during the preceding 30 days.

For drug screens, the following procedures are followed:

- A quantity of urine is collected sufficient to ensure test result reading
- A collector uses a urine screening device
- Urine specimens that have a non-negative test result will be submitted to a certified lab for confirmatory analysis or employee will be re-tested at a health clinic for confirmation

For alcohol screens:

- Alcohol tests are administered by a collector using a DOT approved breath alcohol screening device.

Refusal by an employee to sign the consent form and provide the information requested, or refusal to take an alcohol or drug screening test when directed under the terms of the Policy to do so, or refusal to cooperate fully with the medical personnel administering such tests shall be considered insubordination and will result in the employee's termination. Testing will be done on Company time, during working hours. Arrangements for testing will be made by office staff when notified of the need by crew foreman.

For more detailed information regarding this plan, see PPM's Drug and Alcohol Abuse Policy.

14.20 Site Sanitation Plan

1. Drinking water
   a. Dispenser -- water cooler.
   b. Disposal of waste -- daily site cleanup.
   c. Cleaning containers -- water containers will be cleaned weekly.
   d. Salt tablets will be furnished at each water cooler if required.
2. Toilets
   a. Toilets shall be chemical type

14.21 Respiratory Protection Plan

This respiratory program is established to ensure that information about respiratory protection is available, to all employees. This project should have very little need for respiratory protection, however should its use be necessary on a task, all affected employees will participate in the respiratory safety program. The respiratory protection program coordinates the use and maintenance of respiratory equipment to reduce employee exposure to toxic chemical agents, allow employees to work safely in potentially hazardous work environments and to maintain compliance with State and Federal regulations.

When possible, exposure to contaminants will be eliminated by engineering controls, or administrative methods. When these methods are not feasible, the use of personal respiratory protective equipment will be required.

1. *Program Administration* -- The SS is the designated person in charge and shall determine whether or not a person may be assigned to a task requiring the use of a respirator. *Persons with physical disabilities such as, but not limited to respiratory impairments, or claustrophobia when wearing a respiratory, shall not be assigned to tasks requiring the use of respirators unless it has been determined by a qualified physician that they are physically able to perform the work and use the equipment.* ***Under no circumstances should a respirator be worn without first undergoing an evaluation by a qualified physician.***
2. *Training* -- Each worker required to wear a respirator shall be given training such that he/she is knowledgeable and proficient with respect to the respirator to be worn. A designated qualified person will be responsible for training every affected worker.
3. *Approved Respirators* -- Only approved or accepted respirators shall be used. Any modification to a respirator that is not authorized by the approving agencies or manufacturer voids the approval.

4. *Respirator Selection* -- Respirators shall be selected on the basis of the hazards to which the worker is exposed.
5. *Issue of Respirators* -- The Company will furnish the proper respirator for you use on any project.
6. *Respirator Fit* -- Each wearer shall be personally fitted to his/her respirator. Daily, each wearer of a respirator equipped with a face piece shall check the seal of the respirator by appropriate means. This will be accomplished by using procedures recommended by the respirator manufacturer at the time of the fit test. Facial hair is not permitted during the use of any face-fitting respirator. The wearer of a respirator shall not be allowed to wear contact lenses if the risk of eye damage is increased by their use. If spectacles, goggles, a face shield or welding helmet must be worn with a face piece, it shall be worn so as not to adversely affect the seal of the face piece to the face.
7. *Respirator Inspection* -- The respirator shall be inspected by the wearer prior to each use to ensure that it is in proper working condition. Each respirator stored for emergency or rescue use shall be inspected at least once a month.
8. *Monitoring Respirator Use* -- Supervisory personnel shall periodically monitor the use of respirators to ensure that they are worn properly. The results of monitoring shall be documented.
9. *Evaluating Respiratory Hazard* -- Appropriate surveillance of work area conditions and degree of employee exposure or stress shall be maintained.
10. *Medical Surveillance* -- Medical surveillance shall be carried out to determine if respirator wearers are properly fit for the respirator and are receiving adequate respiratory protection. A physician shall determine the requirements of the surveillance program.
11. *Respirator Maintenance* -- Employees are responsible to maintain and not damage the respirator issued to them. Additional filters shall be distributed for use as they become clogged with matter and resistance in breathing occurs. Respirator maintenance shall be performed regularly. Maintenance shall be carried out on a schedule, which ensures each respirator wearer is provided with a respirator that is clean, and in good operating condition. Maintenance shall include:
    a. Washing, sanitizing, rinsing, and drying;
    b. Inspection for defects;
    c. Replacement of worn or deteriorated parts;
    d. Repair if necessary; and
    e. Storage to protect against dust, sunlight, excessive heat, extreme cold, excessive moisture, damaging chemicals, or physical damage.
12. *Documentation -- Maintain accurate records of all training received and who gave the training.*

14.22 Health Hazard Communication Program

PPM's goal is to ensure that every employee receives adequate information and training necessary for the safe use, handling and storage of any product containing potentially hazardous chemicals.

1. List of Hazardous Chemicals
    a. A list of all hazardous chemicals or products containing potentially hazardous chemicals is available from the quality control manager and is on file at the project site office. Hazardous chemicals anticipated on site include diesel, hydraulic fluid and gasoline. Quantities of these chemicals will be kept to a minimum.
    b. Gasoline and diesel on site, other than in equipment tanks, will be kept in approved safety gas and fuel cans.

2. Container Labeling
    a. It is the intent of this company to use products only in their original labeled container and to not use secondary containers. PPM shall rely on manufacturer applied labels whenever possible, and shall ensure that these labels are maintained. Containers that are not labeled or the label is not legible shall be relabeled.
    b. If the manufacturer's label is not legible or unusable or a secondary container must be used for storage, PPM shall verify the label lists the product name, identity of hazardous chemicals, the appropriate hazard warnings and the name and address of the manufacturer.
    c. Unlabeled secondary containers are approved only when the contents are for immediate use. Any chemical left after work is completed must be returned to the original container.
    d. No unmarked containers of any size are to be left in the work area unattended.
3. Material Safety Data Sheet (MSDS) and Physical Agent Data Sheet (PADS)
    a. MSDS's will be maintained at the job office for all products containing or potentially containing a hazardous chemical. A copy of the MSDS for review may be requested from the immediate supervisor.
    b. MSDS's must be available for all working shifts and provide immediate reference to the chemical safety information, first aid, spill procedures, etc.
    c. PADS's will also be maintained if applicable. Typical PADS that may be available to the workers include sheets pertaining to microwave frequencies, cold or heat stress, excessive loud level of noise, ultraviolet radiation, lasers, or above normal levels of hand-arm vibrations.
4. Employee Information and Training
    a. At every new employee orientation and the start of every new project, all employees shall be informed about chemical safety including the following:
        - Operations involving products containing potentially hazardous chemicals.
        - Where the written material is located.
    b. Before employees come into contact with any hazardous chemical or chemical by-product, specific training shall be given prior to using, mixing, applying or disposing of the substance. Informational training shall be given that addresses the following.
        - How to recognize the presence of a chemical, its visual appearance, odor, etc.
        - How the chemical can enter the body and its physical effect and warning signs.
        - Protective measures to take including normal work procedures and emergency procedures, spills and leaks, protective gear, first aid, etc.
5. Hazardous Non-Routine Tasks
    a. Periodically, employees may be required to perform hazardous non-routine tasks such as confined space entry, tank cleaning, tunneling or enclosed painting (not anticipated on this project). Prior to starting work on such a task, every affected employee shall be given information about the hazardous chemicals that he/she may encounter during such activity.
    b. The information given shall include specific chemical hazards, protective measures and safety measures the worker shall undertake, and the steps the company is using to reduce the hazards, including ventilation, respirators, presence of another employee, and emergency procedures.

14.23 Control and Disposal of Hazardous Waste

General

1. It is anticipated that, in the course of normal construction, small quantities of hazardous waste will be generated. Typical site-produced hazardous waste might include leftover form oil, curing compounds, solvents, paints, and other construction related chemicals. PPM will prevent these pollutants from degrading the environment by:
   - Limiting the amount of hazardous waste generated
   - Properly managing the waste that is produced
   - Training field personnel in the proper identification and handling of hazardous materials

Protective Measures

1. The amount of job-site generated hazardous waste will be limited by:
   a. Substituting hazardous products with non-hazardous materials whenever possible.
   b. Maintaining and ordering only the minimum anticipated quantities of hazardous materials needed.
   c. Keeping hazardous liquids in corrosion resistant spill-proof containers. Containers shall be kept closed except for when filling or emptying.
   d. Conserving and reusing products whenever possible.
   e. Maintaining proper labeling of all substances as required by law. If material, such as form oil, curing compound or diesel fuel, is transferred from large drums into smaller containers, a different color container will be used for each product.
   f. Keeping a supply of rags, absorbent pads, and floor dry in a designated storage area.
2. Jobsite-generated waste material will be properly managed by:
   a. Maintaining a central storage area with a complete and continually updated inventory of hazardous material.
   b. Planning and preparing for accidents or the discovery of unknown and potentially hazardous material. Emergency phone numbers and locations of emergency equipment will be posted near telephones. All employees will be instructed concerning proper emergency procedures. PPM has prepared a guideline of appropriate steps to take when encountering an unknown and potentially hazardous material on the jobsite. Copies of the checklist will be posted near Company telephones. The Company's oil and hazardous substance spill procedure outlines the steps to be taken if an accident occurs. Copies of these procedures shall also be posted. HSO will ensure all emergency procedures are carried out and the proper notification given in the event of an emergency.
3. Training of field personnel in the proper identification and handling of hazardous waste starts with the Company's new hire orientation program. All new employees shall attend classes on:
   - The "Right to Know" law
   - Reading and understanding Material Safety Data Sheets
   - Identification and handling of hazardous waste

14.24 Guideline When Encountering Unknown Material

Listed below are some guidelines and appropriate steps to take when encountering an unknown and potentially hazardous material at a worksite. For example, your crew runs into a mass of gurgling, foul-smelling goo while doing site excavation…what do you do?

1. Unless absolutely sure of the identity of the material, assume that it is hazardous.
2. Have someone immediately call 911 and report the encounter to the fire department. They will provide an appropriate response to the situation, either an engine company or the Hazardous Material Team. (Note: *The person calling the fire department should have seen the situation prior to making the call so they can provide adequate details*).
3. Evacuate all personnel from the area. If possible, cordon off the area in order to limit public access.
4. If you are relatively sure there is no immediate danger, make some attempt to contain the material.
5. Notify the Department of Ecology Spill Response Unit by calling the appropriate regional office. If in another state, or unsure of the number, call the Environmental Protection Agency Spill Hotline at 800 424-8802.
6. Notify the owner/developer. They may wish to employ a consultant or remediation contractor to work in concert with the D.O.E.
7. Notify the Safety Department.

14.25 Control and Dispensing of Petroleum Products

Storage Requirements

On site temporary storage of petroleum products shall be in designated areas only. Such areas will incorporate the following protective measures:

1. Covering and wind protection shall be provided around the storage area.
2. The storage area will be lined with a double layer of visqueen to prevent any spilled products from entering the ground.
3. Secondary containment shall be provided by an impervious berm around the perimeter of the storage site. Capacity of the bermed area shall be at least 110% of the largest container.
4. All tanks within the storage area shall be properly labeled and kept off the ground.
5. Storage sites shall be located only in areas not subject to flooding or substantial rainwater runoff.
6. Actual tank storage location shall be approved by the Contracting Officer.

14.26 Assured Ground Program

PPM shall use ground-fault circuit interrupters to protect employees on construction sites. These requirements are in addition to any other requirements for equipment grounding conductors.

Ground fault circuit interrupters (GFCI) are required by the captioned codes for all 120-volt, single-phase, 15-ampere and 20-ampere receptacle outlets on construction sites, which are not a part of the permanent wiring of the building or structure and which are in use by employees, shall have approved ground-fault circuit interrupters for personnel protection. Receptacles on a two-wire, single-phase portable or vehicle-mounted generator rated not more than 5kW, where

the circuit conductors of the generator are insulated from the generator frame and all other grounded surfaces, need not be protected with ground-fault circuit interrupters.

Receptacles that are part of the permanent wiring of a building or structure must also be protected with temporary GFCI's. In addition to the Ground Fault Circuit Interrupter requirement, it is the policy of PPM to instruct employees NOT TO USE EQUPMENT THAT DOES NOT MEET THE REQUIREMENTS OF THE ASSURED GROUNDING PROGRAM.

The job foreman is responsible for understanding the requirements of the Assured Equipment Grounding Conductor Program and maintaining the necessary logs and paperwork at the job-site, returning them to the office at the end of the job and being sure that all wiring, extension cord and power tool usage under PPM's control is in compliance at all times. Crewmembers must be aware of the requirements of the law in order to avoid being in non-compliance.

All equipment used on the construction-site will be tested for grounding and continuity of the circuitry, identified as follows:

- Before first use on site
- Before use each day – *visually inspect*
- When there is evidence of damage, *(Defective equipment shall not be used until repaired, re-tested and results recorded)*
- Equipment being returned to service following repairs and before use

Visual Inspection

Regardless of coding, all flexible cords (i.e., extension cords, power tool cords, etc.) are to be visually inspected daily by the user. Inspection consists of, but not limited to, checking for the following:

- External defects
- Proper function of cord ends
- Missing ground prong on cord plug. (repair or replace)
- Deformed or missing pins
- Damaged insulation
- Indication of possible internal damage (i.e., stretching, kinking)
- Damaged plugs
- Broken, cracked or burned receptacles
- Outer insulation layer fully extended into the cord end

All daily/use tests shall be recorded on the daily safety report sheet; one copy shall be kept at the job-site until the end of the job.

Testing

Equipment connected by cord and plug, which is not part of the permanent wiring of a building or structure, shall be tested to assure proper grounding. These tests shall be conducted as follows:

- All equipment grounding conductors shall be tested to assure electrical continuity.
- Receptacles, including those on power distribution boards, shall be tested for correct attachment of the equipment-grounding conductor.
- Power tools and cords will also be tested for correct polarity.

Ground Testing - Use one of two methods

- On power cords, use a 3-light test device to check for proper functions.
- On grounded power equipment, use an ohmmeter or other approved tester to check the continuity between the ground plug and the equipment casing.

Double-insulated equipment does not have a ground connection so it can only receive a visual inspection for cord damage.

Cord Insulation

If cord insulation is damaged, repair or replace the cord. The cord end and the portion of the cord where it enters the power equipment are the two most likely places for damage. If a cord is damaged in the center, it is illegal to splice it. Make it into two shorter cords or throw it away.

14.27 Lockout/Tag Out Procedure

Below is PPM's LOTO procedure. On this *site our equipment will be repaired by third party vendors, who will use their own LOTO procedure. If site equipment needs repair, it will need a modified LOTO. Thus, the operator will park the piece of equipment in the lay-down yard or outside the Trihydro office, remove the key, engage the brakes and put a LOTO tag on the door. These actions will be used to avoid potential, inadvertent use of the equipment.*

Purpose

This procedure establishes the minimum requirements for the lockout of energy isolating devices whenever maintenance or servicing is done on machines or equipment. It shall be used to ensure that the machine or equipment is stopped, isolated from all potentially hazardous energy sources and locked out before employees perform any servicing or maintenance where the unexpected energizing or start-up of the machine or equipment or release of stored energy could cause injury.

Policy

All employees are required to comply with the restrictions and limitations imposed upon them during the use of a lockout. The authorized employees are required to perform the lockout in accordance with this procedure. All employees, upon observing a machine or piece of equipment that is locked out to perform servicing or maintenance shall not attempt to start, energize or use that machine or equipment.

Procedure

Application

These procedures are required for all activities in which the unexpected release or transmission of energy or a material could cause injury to employees or damage to equipment. This policy applies to energy sources, such as electrical, mechanical, hydraulic, pneumatic, chemical, radiation, thermal, compressed air, energy stored in springs and potential energy from suspended parts (gravity).

Before beginning work on the machine or equipment, notify all affected employees that servicing or maintenance is required and that the machine or equipment must be shut down and locked out to perform the servicing or maintenance.

The authorized employee shall refer to the Company procedure to identify the type and magnitude of the energy that the machine or equipment utilizes, shall understand the hazards of the energy and shall know the methods to control the energy.

Before de-energizing any equipment, machinery or electrical equipment and applying a Lockout/Tag-out procedure, written permission will be obtained from an authorized Owner/Client representative specifying the date, inclusive items of lockout and specific equipment to be locked out.

An authorized signature, date and phone number are required prior to commencing the Lockout/Tag-out procedure.

Locks

All persons having the need to enter a locked out area or system will be issued as many locks as necessary to perform the expected tasks of the job. Lockout lock key will be provided for each lock. The remaining keys will be forwarded to the Safety Office.

Identification of Lockout Points

A qualified person, operator or supervisor who understands how to effectively control the equipment/process through application of hazard isolating devices will identify lockout points.

Placement of Locks

1. The Owner/Client must be notified and have given approval to lockout the system or equipment before attaching the locks to the isolating devices. A stop button or electrical interlock must never be used as a substitute for Lockout.
2. After lockout and prior to commencement of work, one or more of the following actions must be taken with the assistance of the qualified operator. The lockout list must be signed, verifying the startup attempt.
3. It is the responsibility of each person working within the lockout area to place his/her own lock on all lockout points. Use of another person's lock (i.e. working in the area under the security of another person's lock) is STRICTLY FORBIDDEN. During construction, and prior to check out of the system, the supervisor in charge of the installation of equipment may attach a single lockout device.
4. When more than one employee is required to lockout the same system of equipment, one lock with a tag identifying all employees on the crew shall be used. The crew foreman shall sign the tag and be responsible for accounting for all crew members entering the area. Foreman shall initial the lockout tag and, prior to removing the tag, shall re-initial the lockout tag.
5. If a job extends over a change in shifts, the person coming on the job shall put his/her lock on all the lockout points and the person leaving shall remove his/her locks.

Removal of Locks / Restoring Equipment to Service

When the servicing or maintenance is completed and the machine or equipment is ready to return to normal operating condition, the following steps shall be taken.

1. Check the machine or equipment and the immediate area around the machine or equipment to ensure that nonessential items have been removed and that the machine or equipment components are operationally intact.

2. Check the work area to ensure that all employees have been safely positioned or removed from the area.
3. Verify that the controls are in neutral.
4. Remove the lockout devices and re-energize the machine or equipment. *Note: the removal of some forms of blocking may require re-energizing of the machine before safe removal.*
5. Notify affected employees that the servicing or maintenance is completed and the machine or equipment is ready for use.

If an employee who has finished a job leaves the job-site without removing his/her lock, a department supervisor or, in his/her absence, the Project Superintendent may remove the lock using the following steps in the order shown.

1. Determine whether the employee whose lock remains on the equipment has left the job-site by checking his/her time card. If the employee has not left the site, he/she will be called back to complete the job and /or remove the lock.
2. If the employee has left the site, a reasonable attempt to reach him/her will be made to verify why the lock was not removed. The employee will be requested to return to the job-site to remove his/her lock.
3. If the employee cannot be reached, a reasonable attempt to contact his/her supervisor will be made to verify why the lock was not removed.
4. If the supervisor cannot be contacted, or does not know if the employee has finished the job, the equipment or system must be thoroughly inspected and determined to be safe for operation. An authorized Owner/Client representative must verify this. The lock may then be removed and the equipment or systems tested for operation. If the test is normal, the equipment will be turned over to regular operation.
5. The locks removed by a supervisor will be retained and sent to the Safety Supervisor, along with a brief report explaining why the removal was necessary. The time removed, and by whom will be documented.
6. If the equipment or system is of such a size that the operator cannot see all potential hazard points, personnel shall be stationed at the points of access that are not visible to assure that no one enters an exposed area during startup.

Definitions

Qualified – A person who is trained in lockout procedures, fully familiar with, and authorized to operate all controls for, the equipment or system involved.

Authorized Employee – A person who locks out or tags out machines or equipment. An affected employee becomes an authorized employee when that employee's duties include performing servicing or maintenance covered under this procedure.

Lockout Device – A device that utilizes a positive means such as a lock, key type, to hold an energy-isolating device in a safe position and prevents the energizing of a machine or equipment. Included are blank flanges and bolted slip blinds.

ATTACHMENT LIST

Attachment A	Owner/Partner's Policy Message
Attachment B	Site specific JLAs
Attachment C	High Hazard Permits

ATTACHMENT A

Policy Statement

The Management at Pacific Pile & Marine, L.P. recognizes that accident prevention is an essential ingredient in our business. We are dedicated to providing the active leadership and support necessary to develop and maintain a successful *incident free performance* program with these objectives:

- Provide a safe and healthful work environment for all employees.
- Minimize the risk of human and economic losses resulting from personal injury and property damage.
- Ensure the security, protection and wellbeing of the personnel, equipment and vehicles of our Company.
- Comply with all safety and health laws that apply to the workplace and job-sites.

Accident and loss prevention must be considered a vital part of every job in our Company. The success of the Accident Prevention Plan requires the full and earnest cooperation of each Pacific Pile & Marine employee. All of us should work with safety as our first priority and production as our next priority. Employees should report unsafe conditions or practices to their foreman or supervisor, to the Company HSO or to us directly.

Wilbur L. Clark, Owner

Eric F. Reichelt, Owner

ATTACHMENT B

SITE SPECIFIC JLAs

JLA - JOB LOSS ANALYSIS –PACIFIC PILE AND MARINE

JLA VERSION DATE: REV 4/4/13	**JLA NUMBER: 001**
JOB DESCRIPTION: EXCAVATOR – SOIL REMOVAL/PLACEMENT	
PROJECT: AVERY LANDING CLEANUP	**SITE LOCATION: AVERY, ID**

Development Team	**Position/Title:**	**Primary Contact**
1. Jason Hall	Working Foreman	(208) 661-3166
2. Corey Woodley	Operator	( ) -
3. Brian Hansen	Operator	( ) -
Reviewed By	**Position**	**Review Date (MM/DD/YYYY)**
A. Craig Cearley	PPM SSO/ Superintendent	04/08/2013
B. Wilbur Clark	Project Engineer	04/08/2013
C.		/ /

Personal Protective Equipment (PPE) Needed:

Eye and Face Protection	***Body Protection***	***Fall Protection***
☒ Safety Glasses	☐ Fire Retardant Coveralls	☐ Barriers/Guard Rails
☐ Face Shield	☐ Poly-coated Tyvek Coveralls	☐ Safety Net
☐ Chemical Goggles	☐ Chemical Resistant Coveralls	☐ Personal Fall Arrest System
Head Protection	☐ Chemical Resistant Apron	***Respiratory Protection***
☒ Hard Hat	☒ Reflective Safety Vest	☐ Half-Face Air Purifying Respirator
Hearing Protection	☐ Cooling Vest	☐ Full-Face Air Purifying Respirator
☒ Ear Plugs	***Biological Protection***	☐ Chemical Cartridge
☐ Ear Muffs	☐ Snake Gaiters	☐ Particulate Filter
Hand Protection	☒ Sunscreen	☐ Cartridge/Filter Combo
☒ Industrial Work Gloves	☐ Insect Repellant	☐ Ammonia Cartridge
☐ Chemical Resistant Gloves	***Hazardous Atmosphere Protection***	☐ H2S Escape Cartridge
☐ Laceration Resistant Gloves	☐ Air Monitoring Equipment	☐ Asbestos Filter (P-100)

Personal Protective Equipment (PPE) Needed:		
Foot Protection	☐ Ventilation Fan	☐ Powered Air Purifying Respirator (PAPR) **(contact H&S dept.)**
☐ Leather Boots	☐ Level C	
☒ Steel-Toed Boots	☐ Level B **(contact H&S dept.)**	☐ Supplied Air Respirator (SAR) **(contact H&S dept.)**
☐ Chemical Resistant Boots	☐ Level A **(contact H&S dept.)**	
Water Safety	***Decontamination Materials***	☐ Self-Contained Breathing Apparatus (SCBA) **(contact H&S dept.)**
☐ Personal Flotation Device	☐ Equipment Decontamination	
☐ Waders	☐ Personnel Decontamination	
☐ ***Other:***	☐ ***Other:***	☒ ***Other:*** 2 Way Radio
☐ ***Other:***	☐ ***Other:***	☐ ***Other:***
Rain Gear when needed		

Job Steps	Hazard ID	Potential Hazard(s)	Critical Action(s)
1. Excavator Inspection			
1a Do a 360^0 walk around	Gravity/ Motion	A. Musculoskeletal Injuries from falls at same level	A. Eyes on path (uneven ground/muddy/icy)
1b Climb onto engine cowling or into cab		A. Musculoskeletal Injuries from steps or equipment platform when mounting/dismounting equipment	A. Clean equipment steps of mud/ice before mounting equipment. – Clean mud from boots – Do not carry materials. Place items on the track or inside of cab instead of carrying items up or down – Maintain 3-point contact when mount/dismounting. – Use lower steps – do not jump from equipment
1c Inspecting engine cowling or cab	Motion	A. Hand injuries from door and inspection hatch pinch point B. Body injury from hit from swinging cab door.	A. Wear leather gloves. B. Maintain awareness of hand positioning to avoid pinch points when opening doors/hatches. C. Beware of wind to avoid slamming door
1d Start Engine	Mechanical	A. Equipment damage from Malfunctioning equipment, Safety devices	A. Allow 5-10 minutes or more before cycling controls. B. Make sure immediate area around dozer is clear before engaging hydraulics, look at all gauges make sure they are in good working order C. Test travel alarm, lights, and other safety devices not checked in initial dozer inspection
1e Operating Function Check	Chemical/ biological	A. Spills of hydraulic fluids, diesel causing environmental harm	A. Keep absorbent pads in equipment. Replace immediately after use
	Sound	A. Hearing damage from noisy equipment	A. Hearing protection shall be worn when standing next to idling equipment or when in open cab. Hearing protection inside closed cabs not required unless noise monitoring indicates otherwise.
1f Check Bucket	Gravity	A. Bucket falling off personal injury, death	A. Check bolts on bucket for tightness

Job Steps	Hazard ID	Potential Hazard(s)	Critical Action(s)
2. Operating Excavator			
2a. Site Visitors	Motion	A. Personnel injury or death caused by equipment in motion (run over personnel)	A. Communication between ALL people on ground and equipment….radio, hand signals, eye contact. – Keep on lookout for people on the ground
2b. Moving Excavator from lay-down area to work area	Ergonomic Gravity	A. Musculoskeletal Injuries from poor posture in cab	A. Adjust seat height and arm rests to suit. – Adjust steering handles/wheels to suit body height and reach with arms on controls at about waist height
	Motion	A. Fatalities/injuries/equipment damage from collision with other equipment or personnel B. Injury to public (personal/equipment) when on beach C. Incident due to distracted operator	A. Conduct walk-around of equipment before moving. – Turn on lights – Sound horn twice before pulling away from lay down. – Watch for other equipment/vehicles on route. B. Stop Work when public in route to or in work area C. No cell phone, blue tooth device, earphones, MP3 player or texting while operating equipment. – Use radio when travelling up/down ramp to alert other traffic.
	Motion/ Gravity	A. Injuries sustained by operator from sudden stops, collisions.	A. Wear seat belts
	Sound	A. Hearing damage from noisy equipment	A. Hearing protection shall be worn when standing next to idling equipment or when in open cab. Hearing protection inside closed cabs not required unless noise monitoring indicates otherwise.

Job Steps	Hazard ID	Potential Hazard(s)	Critical Action(s)
3. Prepare Load Out Area			
3a Locate/mark all underground utilities and wells	Motion	A. Unidentified wells or utilities cause Injuries/equipment damage from running over/collision with same	A. Identity wells with red snow poles & yellow tape – Stop Work if new utilities or wells are found and contact site supervisor immediately
	Electrical	A. Electrocution from contact with overhead power lines, power poles and support guy wires.	A. Maintain a minimum of 20ft from overhead power lines – Provide spotter with no other duties if working within 25ft of overhead power lines. – Delineate support guy wires with high-viz tape, maintain 6ft clearance from guy wires
3b Grade Load out area	Gravity	A. unlevel ground or slopes result Fatalities/injuries/equipment damage because of tip over	A. Load out area shall be graded to a level and stable condition before haul trucks are allowed in area. – Inspect work area every day prior to start of shift and after lunch. look for water erosion, unstable ground/consider high winds off Cook Inlet.
3c Communication during preparation	Motion	A. Fatalities/injuries/equipment damage from collisions with support equipment in area	A. Excavator operator will be in contact with dozer operator via hand held radio.
3d Spotting Truck Backing	Motion	A. Striking personnel if in blind spot, bodily injury or damage to equipment	A. Spotter to communicate via radio – Communicate via horn signals – Use Hi-Viz cones – Give distance of backing to truckers
4. Shut Down for Day			
4a Boom and bucket fully extended on ground	Gravity	A. If not fully extended and on ground Boom bleed off could occur and cause bodily injury, crush, and personnel. B. Pinch points can harm hands and fingers	A. Personnel must stay away from underneath boom B. Keep hands out of pinch points – Wear hi-viz gloves

Job Steps	Hazard ID	Potential Hazard(s)	Critical Action(s)
4b Exit Cab	Mechanical	A. Unattended equipment can cause bodily injury or equipment damage by moving	A. Shut down equipment prior to exiting cab
4c Clean tracks and under carriage For shipping	Motion Gravity	A. Possible eye hazard from falling debris B. Falling material from tracks or under carriage	B. Use safety glasses or goggles A. Use gloves & boots to protect against material from these areas
4d FOG	Chemical	A. Greasing boom, bucket and rotor and fueling can cause chemical spill/damage to environment B. Skin irritation due to chemical contact C. Eye irritation due to splash/splatters	A. Have oil absorbent pads ready and available – Spill kit ready – Clean up all excess grease and dispose of properly – Place containment pond under equipment – Never leave fuel hose unattended when fueling B. Always wear chem. Resistant gloves C. Always wear safety glasses
	Motion/ gravity	A. Bodily injury due to uneven ground resulting in a trip	A. Focus on path
	Motion/ gravity	A. Bodily injury due to snagging clothing	A. Ensure safety vest is secured B. Do not wear other loose clothing i
	Motion/ gravity	A. Bodily injury while mounting/dismounting equipment	A. 3-point contact when mount/dismounting. – Use lower steps – do not jump from equipment

Job Steps	Hazard ID	Potential Hazard(s)	Critical Action(s)
4e Putting on thrown track	Gravity Motion	A. Rock in track can crush hand B. Eye/hand injury from cleaning impacted soil from equipment C. Tracks have pressure and can cause serious injury D. Injury due to high pressure rigging with pulling on track can break and hit ground	A. Clean tracks with shovel and do not get under machine B. Wear safety glasses/goggles and gloves while cleaning impacted soil from equipment C. Loosen grease plug. Do more than one turn. Turn it slowly D. Use rated rigging. Know its limits
5. Operations			
5a. Excavation in mud	Motion	A. Injury due to stress on legs if walking in mud and falling B. Sinking equipment in soft surface	A. Only walk in designated spots where you know it's not too soft – Watch step and plan your route B. Make sure you only place your equipment on stable ground
5b. Backing and loading trucks w/dirt	Motion	A. Fly dust and debris cause eye and respiratory irritation	A. Keep windows and door closed while loading – Wear safety glasses/goggles
5c. Load out of wet riprap	Motion Gravity	A. Rock may be more slick cause damage to equipment of slip out and hurt ground personnel	A. Be extra cautious loading/picking wet rock – Make sure ground personnel are well out of the way
5d. Dumping backfill	Gravity Motion	B. Flying rock can cause injury or death and damage to equipment	B. Stay back 50' – Keep equipment cab facing away from rock being dumped – Operator stays in cab – Communication, talk to truck driver, make him dump slowly
5e.Remove concrete debris	Motion Gravity	A. Working on pile edge possible tip over B. Breaking up concrete damage to eyes/body from flying debris	A. Maintain awareness of excavator placement, use spotter if necessary B. Keep windshield in door is closed position to avoid flying debris C. Maintain awareness of excavator placement, mark or have spotter if necessary

Job Steps	Hazard ID	Potential Hazard(s)	Critical Action(s)
5f. Excavate remedial areas	Gravity	A. Excavation soils may be unstable, resulting in slough in B. Soft Road edge possible tip over C. Extreme off balance reach possible tip over	A. Provide a 1-1.5 slope, use benched excavation areas B. Ensure excavator is safe distance from soft newly added materials C. Caution when full reach driving conditions

I have read this JLA, and I understand the hazards and safe work practices associated with the task.

Name_____ Date_____ Date_____ Date_____ Date_____ Date_____ Date_____

Name_____ Date_____ Date_____ Date_____ Date_____ Date_____ Date_____

Name_____ Date_____ Date_____ Date_____ Date_____ Date_____ Date_____

Name_____ Date_____ Date_____ Date_____ Date_____ Date_____ Date_____

Supervisor_____ Date_____ Date_____ Date_____ Date_____ Date_____ Date_____

JLA - JOB LOSS ANALYSIS –PACIFIC PILE AND MARINE

JLA VERSION DATE: 4/4/13	**JLA NUMBER: 002**
JOB DESCRIPTION: LOADER OPERATION ON THE SITE	
PROJECT: AVERY CLEANUP LANDING	**SITE LOCATION: AVERY, ID**

Development Team	**Position/Title:**	**Primary Contact**
1. Jason Hall	Working Foreman	(208) 661-3166
2. Corey Woodley	Operator	( ) -
3. Brian Hansen	Operator	( ) -
Reviewed By Please include the reviewers employer and email if not employed by Trihydro Corporation:	**Position**	**Review Date (MM/DD/YYYY)**
1. Craig Cearley	PPM SSO/ Superintendent	04/08/2013
2. Wilbur Clark	Project Engineer	04/08/2013
3.		/ /

Personal Protective Equipment (PPE) Needed:

Eye and Face Protection	***Body Protection***	***Fall Protection***
☒ Safety Glasses	☐ Fire Retardant Coveralls	☐ Barriers/Guard Rails
☐ Face Shield	☐ Poly-coated Tyvek Coveralls	☐ Safety Net
☐ Chemical Goggles	☐ Chemical Resistant Coveralls	☐ Personal Fall Arrest System
Head Protection	☐ Chemical Resistant Apron	***Respiratory Protection***
☒ Hard Hat	☒ Reflective Safety Vest	☐ Half-Face Air Purifying Respirator
Hearing Protection	☐ Cooling Vest	☐ Full-Face Air Purifying Respirator
☒ Ear Plugs	***Biological Protection***	☐ Chemical Cartridge
☐ Ear Muffs	☐ Snake Gaiters	☐ Particulate Filter
Hand Protection	☐ Sunscreen	☐ Cartridge/Filter Combo
☒ Industrial Work Gloves- High Viz	☐ Insect Repellant	☐ Ammonia Cartridge
☐ Chemical Resistant Gloves	***Hazardous Atmosphere Protection***	☐ H2S Escape Cartridge
☐ Laceration Resistant Gloves	☐ Air Monitoring Equipment	☐ Asbestos Filter (P-100)
Foot Protection	☐ Ventilation Fan	☐ Powered Air Purifying Respirator

☐ Leather Boots	☐ Level C	(PAPR) **(contact H&S dept.)**
☒ Steel-Toed Boots	☐ Level B **(contact H&S dept.)**	☐ Supplied Air Respirator (SAR) **(contact H&S dept.)**
☐ Chemical Resistant Boots	☐ Level A **(contact H&S dept.)**	
Water Safety	***Decontamination Materials***	☐ Self-Contained Breathing Apparatus (SCBA) **(contact H&S dept.)**
☐ Personal Flotation Device	☐ Equipment Decontamination	
☐ Waders	☐ Personnel Decontamination	
☐ ***Other:***	☐ ***Other:***	☒ ***Other:*** 2 Way Radio
☐ ***Other:***	☐ ***Other:***	☐ ***Other:***

Job Steps	Hazard ID	Potential Hazard(s)	Critical Action(s)
1. Conduct Equipment Inspection of Loader			
1a. Conduct a 360^0 walk around of equipment	Gravity Motion Chemical	A. Bodily injuries from falls at same level due to ice or mud B. Tripping on uneven surfaces, debris, rocks resulting in bodily injury C. Spills or leaks onto the ground	Complete daily inspection checklist A. Eyes on path (uneven ground/muddy/icy). Wear slip resistance boots if mud or ice present. B. Remove rocks or debris from pathway/stairs. Plan out the inspection route C. Clean up all spills with spill kit and report all spills or leaks to SSO
1b. Enter/Exit the equipment	Motion Gravity	A. Bodily injuries from slips/falls from Loader while mounting and dismounting the equipment. Head injuries from hit the cab or railing. B. Inadvertent catching of clothing resulting in bodily injury C. Unattended equipment may activate and cause bodily or equipment damage	A. Clean equipment steps of mud/ice before mounting equipment. o Clean mud from boots o Do not carry materials. Place items on catwalk instead of carrying items up or down steps o Maintain 3-point contact and don Hi Viz gloves when mount/dismounting equipment. o Use lower steps to exit equipment – do not jump from equipment to ground surface B. Don't wear loose clothing, zip up coats and vests – if wearing hooded sweatshirts remove or tape up draw strings C. Shut down equipment prior to exiting cab, always
2. Check Operation of Equipment			
2a. Motion Check	Motion	A. Fatalities/injuries to personnel on ground by being hit by blade or rippers B. Unanticipated rolling or movement of equipment causing property damage. Equipment damage from faulty engine or hydraulics Fire from mechanical / electrical faults C. Hand injuries from panels, controls, pinch points D. Bodily injuries from catching loose clothing on moving parts of equipment	A. Ensure no personnel are on ground near equipment during pre-trip motion check- sound horn B. Adjust seat to accommodate reach and comfort zone. Fasten seat belt. Verify that all controls are in neutral position and throttle to low (turtle). Sound horn. Start engine and verify that all gauges are at proper temperature, pressures, warning lights, etc. are working. Allow a minimum of 5 minutes warm up. Be alert for abnormal sounds or smells and use SWA if anything is abnormal. LOTO equipment if alarms are present and contact SSO

Job Steps	Hazard ID	Potential Hazard(s)	Critical Action(s)
			C. Keep hands clear of pinch points and moving parts Always wear Hi Viz leather gloves. ID pinch points with stickers D. Don't wear loose clothing, zip up vest and coats– if wearing hooded sweatshirts remove or tape up draw strings
2b. Inspect forks prior to attaching them to loader	Gravity motion	A. Obstruction surrounding the job area with inspecting potential to fall on debris or be hit	A. Eyes on pathway. Disconnect forks in safe, flat area.
2c. Disconnect bucket from loader		A. Property damage in surrounding area B. Bodily injury to personnel around area from being hit	A. Clear area of personnel and other equipment B. Honk horn prior to disconnecting
2d. Attach forks and check pins		A. Pinch points/ injury to hands	A. Visually check pins DO NOT CHECK PINS WITH HANDS
2e. Operating the Loader- travelling around the site	Motion Chemical Electrical Sound	A. Fatalities/injuries to unauthorized persons/personnel from being hit because of blind spots or change of direction B. Potential crash between vehicles, equipment, monitoring wells, or sheet pile C. Uneven ground conditions result in tip over/roll over D. Dust and debris, injury to eyes and respiratory system E. Equipment being washed out because of tide swings F. Back strain from sitting in machine too long G. Contact with above and underground utilities- light poles H. Noise hazard when window open I. Unstable material rolling out of stockpile or bucket	A. Notify whole affected crew of presence of persons on the beach or in work area. Unauthorized personnel will be met and escorted off work area by site SSO. Watch for and be aware of blind spots. Remove or mark obstacles that may be in blind spots of equipment to make more visible. Demarcation of work area. Check mirrors prior to any movement. Use GOAL before first movement. B. Stop Work if vehicles or other equipment enter the work area. Maintain safe speed and travel no more than 15mph. Keep windows clean to ensure clear visibility. Use spotter when necessary: backing or when bucket is blocking vision. Use radio to contact operator as needed. Do not make abrupt changes to travel speed or direction C. Maintain control of equipment. Allow No distractions. Ensure ground conditions are suitable for job at hand. Reduce speed when turning, crossing slopes, or driving on rough, slick, or muddy surfaces. Fill in pot holes. The load must be balanced evenly and kept low. Travel on designated routes to avoid shifting or soft ground. Be aware of debris protruding from the ground, travel

Job Steps	Hazard ID	Potential Hazard(s)	Critical Action(s)
			around it. Watch for any changes in soil type or condition. Travel up and down slopes, not across slopes. Drive in a straight line while loading. Know weight capacity of equipment. Never exceed the engine, or lift capacities. Do not make abrupt changes to travel speed or direction. D. Close door to cab and shut windows. Make sure safety glasses are worn. Use dust mask if necessary. Call for the use of the water truck to reduce dust E. Verify high tide times and evacuate the area in a timely fashion F. Stop, get out of the equipment and stretch as needed. G. Locate and mark overhead and underground utilities. Never dig into roadway without consulting SSO H. Utilize hearing protection when windows are cracked or down I. Ensure piled material is left in a stable state before moving on to next load. Tilt bucket to prevent material from falling out of bucket while in motion.
3. Operations			
3a. Place material to build up road	Motion Gravity	A. Two loaders working in same area along with dozer B. Tight fit through gate when getting material for road	A. Honk horn prior to moving equipment B. Use spotter and/or be extra careful while driving through gate.
3b. Building/ dumping dirt to widen haul road	Motion Gravity	A. Steep grade, dumping over edge, hitting other vehicle or rolling over edge	A. Use spotter when backing
3c. Working spoils	Motion Gravity	A. Soft material cause equipment to tip	C. Use caution when moving into new area
3d. Dumping	Motion Gravity	A. Rolling over ledge, damage to equipment, bodily damage or death	A. Make sure that footing on ledge is solid and not to exceed too far or too close
3e. Site roads Parking lot cleanup	Motion	A. Injury to ground personnel when initially moving equipment	A. Honk horn prior to moving equipment

Job Steps	Hazard ID	Potential Hazard(s)	Critical Action(s)
3f. Repetitive actions	Motion	A. Injury to hands/arms/legs from vibrations and pulling levers	A. Make sure to stretch wrists, ankles and arms
3g. Operating loader around ground personnel	Motion	B. Bodily harm by losing site and hitting workers on the ground C. Property damage from working in close proximity to the building	A. Stop work immediately if operator loses sight of ground crew – Maintain radio communication and hand communication between two workers B. Voice & signal direction from ground worker to prevent property damage. Stop work if communication is broken
4. Shut Down for Day			
4a. Shut down and park Loader	Motion Gravity Mechanical	A. Entering parking area which could result in injuries to personnel or damage to equipment if contact is made B. Roll away on uneven ground resulting in equipment damage C. Possible equipment damage if equipment is not cooled down appropriately (Fast Shut Down)	A. Check surroundings to ensure no personnel or equipment is near loader and/or attachments. Park equipment in designated staging area. B. Ensure loader is parked on level/even surface. Engage parking brake. Ensure all attachments are lowered. Use wheel chocks after parking C. Let engine idle for 5 minutes to ensure coolant and turbo cool down
4b clean material from frame and wheels	Motion Gravity	A. Hand or eye injury resulting from cleaning mud and debris from wheels, frame, load areas	A. Hand protection, gloves – Safety glasses/goggles
4c. FOG	Chemical Motion Gravity Electrical	A. Chemical spill/damage to environment B. Skin/Eye irritation due to chemical contact including splash/splatters C. Bodily injury due to uneven ground resulting in a trip D. Bodily injury due to snagging clothing E. Bodily injury while mounting/dismounting equipment F. Static electricity – improper grounding or bonding	A. Have spill kit/oil absorbent pads ready and available. Clean up all excess grease and dispose of properly. Place containment pond under equipment. Never leave fuel hose unattended when fueling B. Always wear chemical resistant gloves when fueling. Always wear safety glasses C. Focus on path D. Ensure safety vest is secured. Do not wear loose clothing E. 3-point contact when mount/dismounting. Use lower steps – do not jump from equipment F. Ground and bond fuel tank and equipment prior to fueling

I have read this JLA, and I understand the hazards and safe work practices associated with the task.

Name_____ Date_____ Date _____ Date _____ Date _____ Date _____ Date _____

Name_____ Date_____ Date _____ Date _____ Date _____ Date _____ Date _____

Name_____ Date_____ Date _____ Date _____ Date _____ Date _____ Date _____

Name_____ Date_____ Date _____ Date _____ Date _____ Date _____ Date _____

Name_____ Date_____ Date _____ Date _____ Date _____ Date _____ Date _____

Supervisor_____ Date_____ Date _____ Date _____ Date _____ Date _____ Date _____

JLA - JOB LOSS ANALYSIS –PACIFIC PILE AND MARINE

JLA VERSION DATE: 4/5/13	**JLA NUMBER: 003**
JOB DESCRIPTION: FUELING	**RESPONSIBLE PERSON: OPERATOR**
PROJECT: AVERY LANDING CLEANUP	**SITE LOCATION: AVERY, ID**

Development Team	**Position/Title:**	**Primary Contact**
1. Jason Hall	Working Foreman	(208) 661-3166
2. Corey Woodley	Operator	( ) -
3. Brian Hansen	Operator	( ) -

Reviewed By	**Position**	**Review Date (MM/DD/YYYY)**
1. Craig Cearley	PPM SSO/ Superintendent	04/08/2013
2. Wilbur Clark	Project Engineer	04/08/2013
3.		/ /

Personal Protective Equipment (PPE) Needed:

Eye and Face Protection	***Body Protection***	***Fall Protection***
☒ Safety Glasses	☐ Fire Retardant Coveralls	☐ Barriers/Guard Rails
☐ Face Shield	☐ Poly-coated Tyvek Coveralls	☐ Safety Net
☐ Chemical Goggles	☐ Chemical Resistant Coveralls	☐ Personal Fall Arrest System
Head Protection	☐ Chemical Resistant Apron	***Respiratory Protection***
☒ Hard Hat	☒ Reflective Safety Vest	☐ Half-Face Air Purifying Respirator
Hearing Protection	☐ Cooling Vest	☐ Full-Face Air Purifying Respirator
☒ Ear Plugs	***Biological Protection***	☐ Chemical Cartridge
☐ Ear Muffs	☐ Snake Gaiters	☐ Particulate Filter
Hand Protection	☐ Sunscreen	☐ Cartridge/Filter Combo
☒ Industrial Work Gloves	☐ Insect Repellant	☐ Ammonia Cartridge
☐ Chemical Resistant Gloves	***Hazardous Atmosphere Protection***	☐ H2S Escape Cartridge
☐ Laceration Resistant Gloves	☐ Air Monitoring Equipment	☐ Asbestos Filter (P-100)

Foot Protection	☐ Ventilation Fan	☐ Powered Air Purifying Respirator (PAPR) **(contact H&S dept.)**
☐ Leather Boots	☐ Level C	
☒ Steel-Toed Boots	☐ Level B **(contact H&S dept.)**	☐ Supplied Air Respirator (SAR) **(contact H&S dept.)**
☐ Chemical Resistant Boots	☐ Level A **(contact H&S dept.)**	
Water Safety	***Decontamination Materials***	☐ Self-Contained Breathing Apparatus (SCBA) **(contact H&S dept.)**
☐ Personal Flotation Device	☐ Equipment Decontamination	
☐ Waders	☐ Personnel Decontamination	
☐ ***Other:***	☐ ***Other:***	☐ ***Other:*** 2 Way Radio
☐ ***Other:***	☐ ***Other:***	☐ ***Other:***

Job Steps	Hazard ID	Potential Hazard)s)	Critical Action(s)
1. Fueling Operation			
1a. Maintaining fuel storage & fueling area	Motion	A. Injuries from S.T. while walking on uneven ground B. Injuries from T. over hoses	A. Eyes on path B. Roll up hoses after use, store securely
	Electrical	A. Ignition of fuel from static electricity	A. Fuel hose and nozzle will be rated for fuel use – Ground fuel tank and fueling hose
	Chemical	A. Fuel spill impacting environment B. Fire explosion from ignition of fuel	A. Fuel tank will be located inside a bermed area B. After each use, nozzle and hose will be wiped down, hose reeled up and nozzle placed back in rack. C. Lock out fuel nozzle when not in use. D. Report all spills to supervisor. E. Locate spill kit in fueling area, replenish after use F. Post “NO SMOKING” signs in area G. Maintain a 20# fire extinguisher at a minimum 25ft, no more than 100ft from fuel tank
1b. Secure Pickup/Equipment	Motion/ gravity	A. Bodily injury to ground personnel from rolling pickup/equipment B. Equipment damage from rolling pickup/equipment	A. Park on level ground – Put pickup in park – Set parking brake – Remove key from ignition
1c. Exit vehicle	Motion	A. Musculoskeletal Injuries from falls at same level B. Uneven ground cause trip hazards resulting in bodily injury C. Musculoskeletal Injuries from falls from equipment	A. Eyes on pathway – Remove any obstructions B. 3-point contact exiting equipment – Do not jump

Job Steps	Hazard ID	Potential Hazard)s)	Critical Action(s)
1d. Install fuel hose to truck	Chemical	A. Fuel spill impacting environment Spilled fuel may cause eye or skin irritation B. Fire/explosion from ignition of fuel	A. Ensure duck pond, diapers, etc are in place and available B. Inspect fuel hose for leaks
	Pressure	A. Pressure build up/pocket back blow of fuel from tank can splash into face/eyes causing injury	A. Wear safety glasses/goggles – Stand to the side of the tank opening – Hold fuel nozzle upright/vertical so will not spill fuel
	Electrical	A. Explosion/fire from fuel spill B. Ignition of fuel from static electricity	A. Make sure fuel tank and fueling hose are grounded – Ensure duck pond, diapers, etc are in place and available B. Monitor fuel hose while fueling – Fuel hose and nozzle will be rated for fuel use.
1e. Excavator for fueling	Chemical gravity	A. Fuel coming out of hose may get in eyes or on clothing B. Person may fall from track when climbing up to fuel equipment	A. Use 2 people when possible to handle fuel hose B. Set fuel nozzle upon excavator prior to climbing up to level
1f. Fueling and lubricating equipment	Gravity	C. Bodily injury from fall off equipment or ladder	C. Maintain 3-point contact when mounting/dismounting equipment. – Buddy will pass hose/tools to fueler as needed. – Fueler will work off manufacturer platform only – If ladder is used, it will be places on flat, stable surface. Buddy will support ladder
	Motion/ Gravity	A. Bodily injury from trips/falls inside fueling impoundment	A. Be aware of hoses around feet – Keep walking areas clear of debris

Job Steps	Hazard ID	Potential Hazard)s)	Critical Action(s)
1f. Fueling and lubricating equipment	Chemical	A. Personal injury and environmental impact from spilled fuel, oily rags and lubricants	A. Fueler will wear safety glasses/goggles, petroleum resistant gloves and Tyvek or washable coveralls – Fuel dispensing nozzle will have automatic shut off (no open latch devices) – Fueler will stay with nozzle at all times during fueling operations – All used rags, grease tubes and contaminated PPE will be placed in a clearly labeled 55 gallon drum lined with 6 mil poly
1g. Filling fuel tank by vendor	Electrical	A. Ignition of fuel caused by static electricity B. Incidents resulting from vendor deviating from designated haul route, not following site procedure	A. Ensure bonding between fuel truck and fuel tank C. Fuel vendor will receive site orientation and be escorted at all times
1h. Fill 100 gal tank in pickup	Chemical	A. Fuel spill impacting environment	A. Ground to truck – Visually watch fueling – Do not leave tank while fueling – Always have spill kit at hand
2. Fuel Completion			
2a. Replace Nozzle to fuel tank	Chemical	A. Fuel spill impacting environment	A. Turn off fuel tank – Remove and clean fuel nozzle from truck – Ensure duck pond, diapers, etc are in place and available – Visually watch fueling, – Do not leave tank while fueling – Always have spill kit at hand
	Motion/ Gravity	A. Uneven ground cause trip hazards resulting in bodily injury B. Injury from tripping over hoses	A. Eyes on pathway B. Roll up Coil hoses after use and store securely
	Heat	A. Explosion/fire from fuel spill	A. Make sure fuel tank is grounded Ensure fuel nozzle in storage cradle is secure

I have read this JLA, and I understand the hazards and safe work practices associated with the task.

Name_____ Date_____ Date_____ Date_____ Date_____ Date_____ Date_____

Name_____ Date_____ Date_____ Date_____ Date_____ Date_____ Date_____

Name_____ Date_____ Date_____ Date_____ Date_____ Date_____ Date_____

Name_____ Date_____ Date_____ Date_____ Date_____ Date_____ Date_____

Name_____ Date_____ Date_____ Date_____ Date_____ Date_____ Date_____

Supervisor_____ Date_____ Date_____ Date_____ Date_____ Date_____ Date_____

JLA - JOB LOSS ANALYSIS –PACIFIC PILE AND MARINE

JLA VERSION DATE: 4/5/13	**JLA NUMBER: 004**
JOB DESCRIPTION: ARTICULATING TRUCK OPERATION	**RESPONSIBLE PERSON: OPERATOR**
PROJECT: AVERY LANDING CLEANUP	**SITE LOCATION: AVERY, ID**

Development Team	**Position/Title:**	**Primary Contact**
1. Jason Hall	Working Foreman	(208) 661-3166
2. Corey Woodley	Operator	( ) -
3. Brian Hansen	Operator	( ) -

Reviewed By	**Position**	**Review Date (MM/DD/YYYY)**
1. Craig Cearley	PPM SSO/ Superintendent	04/08/2013
2. Wilbur Clark	Project Engineer	04/08/2013
3.		/ /

Personal Protective Equipment (PPE) Needed:

Eye and Face Protection	***Body Protection***	***Fall Protection***
☒ Safety Glasses	☐ Fire Retardant Coveralls	☐ Barriers/Guard Rails
☐ Face Shield	☐ Poly-coated Tyvek Coveralls	☐ Safety Net
☐ Chemical Goggles	☐ Chemical Resistant Coveralls	☐ Personal Fall Arrest System
Head Protection	☐ Chemical Resistant Apron	***Respiratory Protection***
☒ Hard Hat	☒ Reflective Safety Vest	☐ Half-Face Air Purifying Respirator
Hearing Protection	☐ Cooling Vest	☐ Full-Face Air Purifying Respirator
☐ Ear Plugs	***Biological Protection***	☐ Chemical Cartridge
☐ Ear Muffs	☐ Snake Gaiters	☐ Particulate Filter
Hand Protection	☐ Sunscreen	☐ Cartridge/Filter Combo
☒ Industrial Work Gloves	☐ Insect Repellant	☐ Ammonia Cartridge
☐ Chemical Resistant Gloves	***Hazardous Atmosphere Protection***	☐ H2S Escape Cartridge

☐ Laceration Resistant Gloves	☐ Air Monitoring Equipment	☐ Asbestos Filter (P-100)
Foot Protection	☐ Ventilation Fan	☐ Powered Air Purifying Respirator (PAPR) **(contact H&S dept.)**
☐ Leather Boots	☐ Level C	
☒ Steel-Toed Boots	☐ Level B **(contact H&S dept.)**	☐ Supplied Air Respirator (SAR) **(contact H&S dept.)**
☐ Chemical Resistant Boots	☐ Level A **(contact H&S dept.)**	
Water Safety	***Decontamination Materials***	☐ Self-Contained Breathing Apparatus (SCBA) **(contact H&S dept.)**
☐ Personal Flotation Device	☐ Equipment Decontamination	
☐ Waders	☐ Personnel Decontamination	
☐ ***Other:***	☐ ***Other:***	☒ ***Other:*** 2 Way Radio
☐ ***Other:***	☐ ***Other:***	☐ ***Other:***

Job Steps	Hazard ID	Potential Hazard(s)	Critical Action(s)
1. Enter the Truck			
1a. Climb the Steps	Motion/ Gravity	A. Slips trips and falls from slipping on steps leading to contusions, fractures or muscular strain.	A. Verify steps are clean. – Use correct 3 point contact when climbing on or off trucks. – Observe hand/finger placement when opening doors or hoods and adjusting seats. – Verify seat belt is properly secured.
1b. Open Door	Motion	A. Hand or finger injury from doors and hood,	A. Wear leather work gloves.
1b Adjust Seat & Mirrors	Motion	A. Muscular strains from sliding seat or controls out of adjustment	A. When adjusting seat/mirrors, do it in a controlled manner and watch for pinch points
1c. Fasten Seat Belt	Motion	A. Falling out of seat leading to bruises or fractures.	A. Ensure that seat belt is secured properly and used every time
2. Driving truck			
2a. Site Visitors	Motion	A. Personnel injury or death caused by equipment in motion (run over personnel)	A. Communication between ALL people on ground and equipment….radio, hand signals, eye contact. – Keep on lookout for people on the ground
2b.operation of truck	Motion	A. Back/spinal injury due to rough road. Bounce around while driving	A. Road repair and speed

Job Steps	Hazard ID	Potential Hazard(s)	Critical Action(s)
2c. Drive to Loading Site: • Start the Engine • Drive • Stage Truck • Set Brake	Mechanical Motion	B. Engine damage from not following proper warm up procedures. C. Struck by (crushing injury), equipment damage from striking another piece of equipment. Unexpected movement and striking property or persons. D. Uneven/rough terrain when driving to/from loading and dumping area. E. "H" pile sticking out of ground exposed sheet pile walls cause equipment damage/ personnel injury	B. Start engine and allow minimum 10 minute warm up. C. Verify ground personnel/spotters and equipment is clear of truck. – Follow route to staging area, wait to be loaded. – Verify truck is in park and park brake is set. D. Drive slowly and check road for hazards (see D) E. Paint the "H" pile Orange
2d. Loading Truck: • Move to Start of Backing Position • Back Truck • Park truck • Set Brakes • Operator Moves to Waiting Area • Only when loading #13000 or greater • Backing to be loaded when there are 2 excavators in work area	Motion	A. Struck by (crushing injury), or equipment damage from striking another piece of equipment. B. Unexpected movement and striking property and/or ground personnel. C. Extreme vehicular movement during loading. D. Collision with equipment resulting in damage to equipment	A. Move truck to turn around area. – Follow spotter instructions to back into loading station. – Stop backing when operator signals or communicates you are in position. B. Verify truck is in park and parking brake is set before operator exits cab and moves to designated waiting area during loading. C. Operator should exit truck cab and wait in designated area while truck is loaded/only on rocks that have been pre-determined to be too big to safely stay in the cab D. Watch for swing from excavator – Communicate with both operators as needed – Radio contact wait till channel is clear to ensure contact with operator

Job Steps	Hazard ID	Potential Hazard(s)	Critical Action(s)
2e. Travel to dump area • Climb the Steps • Open Door • Adjust Seat & Mirrors • Fasten Seat Belt • Drive to Dump Area • Position truck • Move to Start of Backing Position • Back Truck • Pedestrians • Driving on wet roads	Gravity Motion	A. Slips trips and falls from slipping on steps leading to contusions, fractures or muscular strain. B. Hand or finger injury from doors and hood, sliding seat or turning mirrors. C. Falling out of seat leading to bruises or fractures. Muscular strains from seat or controls out of adjustment. D. Struck by (crushing injury), or equipment damage from striking another piece of equipment. E. Unexpected movement and striking property and/or ground personnel. F. Extreme vehicular movement during loading. G. Personnel/Surveyor may be run over if not seen H. Vehicle may slip on slick roads and cause damage to equipment I. Loss of control of excavator if Excavator operator needs to use radio	A. Verify steps are clean. – Use correct 3 point contact when climbing on or off trucks. B. Wear leather work gloves. – Observe hand/finger placement when opening doors or hoods and adjusting seats. C. Verify seat belt is properly secured. D, E & F Follow spotter instructions to back into dumping station. – Stop backing when operator signals or communicates you are in position. G. Radio contact with visual confirmation H. Watch for blind spots ask for spotter I. Use extreme caution on slick surfaces J. Excavator operator to use horn to avoid release of thumbs and to guide the trucks back, when to start and stop
2f. Driving on haul road to dump site	visual	A. Collision with other vehicles injury/fatality	A. Wait for dust to settle so you can see where you are backing to

Job Steps	Hazard ID	Potential Hazard(s)	Critical Action(s)
2g. Dump Material • Dump Load • Pull Forward • Lower Bed	Motion gravity	B. Struck by (crushing injury), or equipment damage from striking another piece of equipment. C. Tip over from uneven ground, striking another truck or ground personnel. D. Crushing injury to ground personnel. E. Box rollover while dumping	B. Truck must be completely stopped. C. Pull forward with extreme caution on uneven ground – Verify truck is level ground. – Operator should be proactive about asking to repair road as needed – Watch for soft lip on stockpile when backing to dump C&D Confirm a minimum 40' radius around truck is clear of pedestrians and equipment. – Raise the bed to empty material. – Pull forward enough to clear the box. E. Check fro level & firm placement of driver tires before dumping load
2h. Shut Down • Move vehicle to parking area • Park Equipment • Exit cab • Equipment Cool Down • FOG	Motion Mechanical	A. Unattended equipment can move and cause bodily injury or equipment damage B. Truck can move after shutdown C. Premature engine shut down can cause/contribute to engine failure.	A. Shut down equipment prior to exiting cab. B. Park vehicle in designated parking area. Place vehicle in park position, set parking brake and chock wheels. C. After truck is parked it will be run at an idle for a minimum of 5 minutes to allow coolant and turbo cool down.

I have read this JLA, and I understand the hazards and safe work practices associated with the task.

Name_____ Date_____ Date_____ Date_____ Date_____ Date_____ Date_____

Name_____ Date_____ Date_____ Date_____ Date_____ Date_____ Date_____

Name_____ Date_____ Date_____ Date_____ Date_____ Date_____ Date_____

Supervisor_____ Date_____ Date_____ Date_____ Date_____ Date_____ Date_____

JLA - JOB LOSS ANALYSIS –PACIFIC PILE AND MARINE

JLA VERSION DATE: 4/5/13	**JLA NUMBER: 005**
JOB DESCRIPTION: ROLLER OPERATION	
PROJECT: AVERY LANDING CLEANUP	**SITE LOCATION: AVERY, ID**

Development Team	**Position/Title:**	**Primary Contact**
1. Jason Hall	Working Foreman	(208) 661-3166
2. Corey Woodley	Operator	( ) -
3. Brian Hansen	Operator	( ) -

Reviewed By	**Position**	**Review Date (MM/DD/YYYY)**
1. Craig Cearley	PPM SSO/ Superintendent	04/08/2013
2. Wilbur Clark	Project Engineer	04/08/2013
3.		/ /

Personal Protective Equipment (PPE) Needed:

Eye and Face Protection	***Body Protection***	***Fall Protection***
☒ Safety Glasses	☐ Fire Retardant Coveralls	☐ Barriers/Guard Rails
☐ Face Shield	☐ Poly-coated Tyvek Coveralls	☐ Safety Net
☐ Chemical Goggles	☐ Chemical Resistant Coveralls	☐ Personal Fall Arrest System
Head Protection	☐ Chemical Resistant Apron	***Respiratory Protection***
☒ Hard Hat	☒ Reflective Safety Vest	☐ Half-Face Air Purifying Respirator
Hearing Protection	☐ Cooling Vest	☐ Full-Face Air Purifying Respirator
☒ Ear Plugs	***Biological Protection***	☐ Chemical Cartridge
☐ Ear Muffs	☐ Snake Gaiters	☐ Particulate Filter
Hand Protection	☐ Sunscreen	☐ Cartridge/Filter Combo
☒ Industrial Work Gloves	☐ Insect Repellant	☐ Ammonia Cartridge
☐ Chemical Resistant Gloves	***Hazardous Atmosphere Protection***	☐ H2S Escape Cartridge
☐ Laceration Resistant Gloves	☐ Air Monitoring Equipment	☐ Asbestos Filter (P-100)

Foot Protection	☐ Ventilation Fan	☐ Powered Air Purifying Respirator (PAPR) **(contact H&S dept.)**
☐ Leather Boots	☐ Level C	
☒ Steel-Toed Boots	☐ Level B **(contact H&S dept.)**	☐ Supplied Air Respirator (SAR) **(contact H&S dept.)**
☐ Chemical Resistant Boots	☐ Level A **(contact H&S dept.)**	
Water Safety	***Decontamination Materials***	☐ Self-Contained Breathing Apparatus (SCBA) **(contact H&S dept.)**
☐ Personal Flotation Device	☐ Equipment Decontamination	
☐ Waders	☐ Personnel Decontamination	
☐ ***Other:***	☐ ***Other:***	☒ ***Other:*** 2 Way Radio
☐ ***Other:***	☐ ***Other:***	☐ ***Other:***

Job Steps	Hazard ID	Potential Hazard(s)	Critical Action(s)
1. Conduct Equipment Inspection of Roller			
1a. Conduct a 360^0 walk around of equipment	Gravity Motion Chemical	A. Bodily injuries from falls at same level due to mud or rain B. Tripping on uneven surfaces, debris, rocks resulting in bodily injury C. Spills or leaks onto the ground	Complete daily inspection checklist A. Eyes on path (uneven ground/muddy/rain). Wear slip resistance boots if mud or rain present. B. Remove rocks or debris from pathway. Plan out the inspection route C. Clean up all spills with spill kit and report all spills or leaks to SSO
1b. Enter/Exit the equipment	Motion Gravity	A. Bodily injuries from slips/falls from roller while mounting and dismounting the equipment. Head injuries from hit the cab or railing. B. Inadvertent catching of clothing resulting in bodily injury C. Unattended equipment may activate and cause bodily or equipment damage	A. Clean equipment steps of mud before mounting equipment. o Clean mud from boots o Do not carry materials. Place items on catwalk instead of carrying items up or down steps o Maintain 3-point contact and don Hi Viz gloves when mount/dismounting equipment. o Use lower steps to exit equipment – do not jump from equipment to ground surface B. Don't wear loose clothing, zip up coats and vests – if wearing hooded sweatshirts remove or tape up draw strings C. Shut down equipment prior to exiting cab, always
1c. Check operation of equipment-Motion Check	Motion	A. Fatalities/injuries to personnel on ground by being hit by roller B. Unanticipated rolling or movement of equipment causing property damage. Equipment damage from faulty engine or hydraulics C. Fire from mechanical / electrical faults D. Hand injuries from panels, controls, pinch points E. Bodily injuries from catching loose clothing on moving parts of equipment	A. Ensure no personnel are on ground near equipment during pre-trip motion check- sound horn B. Adjust seat to accommodate reach and comfort zone. Fasten seat belt. Verify that all controls are in neutral position and throttle to low (turtle). Sound horn. Start engine and verify that all gauges are at proper temperature, pressures, warning lights, etc. are working. Allow a minimum of 5 minutes warm up. Be alert for abnormal sounds or smells and use SWA if anything is abnormal. LOTO equipment if alarms are present and contact SSO C. Keep hands clear of pinch points and moving parts D. Always wear Hi Viz leather gloves. ID pinch points with stickers E. Don't wear loose clothing, zip up vest and coats– if wearing hooded sweatshirts remove or tape up draw strings

Job Steps	Hazard ID	Potential Hazard(s)	Critical Action(s)
2. Operation			
2a. Compacting Remedial Areas	Gravity	A. Soft edges/rollover serious injury / death	A. Stay 2 feet from un-bermed edge when rolling up or down haul road. – Use a spotter if needed – Always back away from edge of bluff – Never back to the downhill side – Use dozer to smooth out any piles of material
	Motion	A. People on ground/survey Rolling over serious injury/death	A. Radio contact with anyone on the ground in your work area before you start ground work.
3. Shut Down for Day			
3a. Retun to laydown yard FOG	Chemical Motion Gravity Electrical	A. Chemical spill/damage to environment B. Skin/Eye irritation due to chemical contact including splash/splatters C. Bodily injury due to uneven ground resulting in a trip D. Bodily injury due to snagging clothing E. Bodily injury while mounting/dismounting equipment F. Static electricity – improper grounding or bonding	A. Have spill kit/oil absorbent pads ready and available. Clean up all excess grease and dispose of properly. Place containment pond under equipment. Never leave fuel hose unattended when fueling B. Always wear chemical resistant gloves when fueling. Always wear safety glasses C. Focus on path D. Ensure safety vest is secured. Do not wear loose clothing E. 3-point contact when mount/dismounting. Use lower steps – do not jump from equipment F. Ground and bond fuel tank and equipment prior to fueling

I have read this JLA, and I understand the hazards and safe work practices associated with the task.

Name_____ Date_____ Date_____ Date_____ Date_____ Date_____ Date_____

Name_____ Date_____ Date_____ Date_____ Date_____ Date_____ Date_____

Name_____ Date_____ Date_____ Date_____ Date_____ Date_____ Date_____

Name_____ Date_____ Date_____ Date_____ Date_____ Date_____ Date_____

Name_____ Date_____ Date_____ Date_____ Date_____ Date_____ Date_____

Supervisor_____ Date_____ Date_____ Date_____ Date_____ Date_____ Date_____

ATTACHMENT C
HIGH HAZARD PERMITS

Fall Protection Plan

Job Foreman:

Complete this form prior to the deployment of personnel within the job-site. Retain at job-site until end of job, then forward to office.

Job # _____
Job Location _____
General Contractor _____

Identify all fall hazards in work area: include exposures at elevations of 6 feet or greater.

_____

_____

_____

Fall restraint or arrest methods for personnel climbing or stationed on, around, in or next to:

Use the following list of Acceptable Fall Restraint/Fall Arrest Methods: *Note in the boxes the letter corresponding to the fall arrest/ fall restraint method(s) that you will employ to counter each hazard that will exist on this job.*

a. Cleated Cover
   Can be used only for protecting openings 12" or less in narrowest dimension
b. Substantial Cover Fastened to Deck Surface
   Capable of supporting maximum expected load, but never less than 200 pounds
c. Standard Guard Rails
   42" high top rail capable of supporting 200 lbs pressure; mid rail (1x6 minimum); 4" toe boards
d. Handrails
   For stairways
e. Lifeline w/ rope grab
f. Warning line system (Control Zone – WAC 296-155-24520)
g. Safety Harnesses, Lanyards
   - Full body harnesses only; no belts. Must be tied off above level of work.
   - Lanyard length must be according to manufacturer's direction but no longer than 6 feet
h. Safety Monitor System (See WAC 296-155-24521)
   Name(s) of Monitors
   _____
   _____
i. Ladders tied off at top
j. Safety Nets
k. Catch Platforms
l. Other
   _____

1. Timber piles, dolphins and wing walls

2. Sheet Piles and Cells

3. Steel "H" or Pipe Piles

4. Trenches, Augured Holes, Excavations & Embankments

5. Docks, decks, platforms, bridges and buildings

- Leading Edges				
- Perimeter Edges				
- Openings				
- Stairways				
- Other (Specify Below)				

6. Equipment

- Scaffolds				
- Ladders				
- Man Baskets				
- Jillies				
- Crane Booms				
- Driver/Auger Leads				
- Other (Specify Below)				

Training

1. Safety Monitors Trained? ☐ Yes ☐ No ☐ Not Applicable
2. Employee Fall Protection Training
   a. Trained Employees
   b. Non-trained employees

      _____
      _____
      _____

   c. Explain reason for non-trained employees

      _____

3. Documentation of Training Available? ☐ Yes ☐ No
   Where? ☐ Office ☐ Site ☐ Other: _____

Fall Protection System Procedural Documentation: Assemble, Inspection, Maintenance, Disassembly:

1. Assembly references
   a. WAC 296-155-24501 through 296-155-24525
   b. Manufacturer's Instructions

   Person responsible for assembly: Job-site Foreman

1. Inspections
   a. All fall arrest and fall restraint systems and equipment shall be inspected prior to each use (body harnesses, lanyards, lifelines, man baskets) or at least daily by the job-site foreman
   b. Inspection Log
      All fall protection plan equipment and systems have been inspected as required according to the following schedule:

Date Performed	Signature

_____

_____

Foreman: record more inspections on additional sheets as necessary.

3. Maintenance
   a. Maintenance of fall protection system components shall be performed whenever possible by the manufacturer's employees, agents or representatives. In any case, only qualified personnel shall perform maintenance or modifications of these materials.
4. Disassembly
   a. Disassembly of fall protection system components shall be performed according to manufacturer's specifications or according to the WAC codes specified above under "Assembly".

Procedures for Handling, Storing and Securing Tools and Materials

1. How will Materials be moved within the job-site?
   a. Check one or more: ☐ Crane ☐ Fork Lift ☐ Other _____
   b. Will proper safety procedures be employed while working with this equipment?
      ☐ Yes ☐ No: Explain _____
2. Will Tools, Materials and Equipment be secured when placed in position and when not in use, so as to minimize falling or upset, even as weather conditions deteriorate or in event of light to moderate earthquake?
   ☐ Yes ☐ No: Explain _____

Overhead Protection Procedures

1. How will you protect workers and visitors from injury caused by falling objects?
   Check one or more of the following methods:
   ☐ Eliminate access to danger zone by barricade
   ☐ Post warning signs
   ☐ Require hard hats; post signs
   ☐ Install nets
   ☐ Toe boards around deck and floor openings
   ☐ Barrier tape and/or tags set up for overhead hazards
   ☐ Other. Specify: _____

Methods of Ensuring Prompt, Safe Removal of Injured Personnel

Check one or more methods for this job.

☐ Enlist Emergency Medical Assistance
   a. Call 911. Is a telephone readily accessible?
   b. Call for assistance via Company radio
☐ Utilize crane or boom truck with personnel platform
☐ Reach victim with ladders
☐ Reach victim with drop lines or retraction device
☐ Be available to assist Medical, Fire or Emergency Response Teams
☐ Other: _____

Location of anchor points if applicable (describe)

_____

_____

Has the work plan been reviewed in detail with the persons assigned below? ☐ Yes ☐ No ☐ Not Applicable

I/We certify that I/we have received proper explanation, instructions, and information on the above material. I/We am/are assigned to work in control zone/ leading edge:

_____ _____

_____ _____

_____ _____

_____ _____

Competent Person: _____ Date: _____

Excavation/Trenching/Shoring Plan

Project _____ Date _____

The following Excavation/Trenching/Shoring Plan is hereby formulated for _____

located at the following job-site address _____

Designated Competent Person _____

A. **IDENTIFY** how regulations apply:

1. Excavation more than 4 feet deep and (specify)**
   - ☐ Less than 20 feet deep
   - ☐ More than 20 feet deep - professional engineer design required
2. Confined space hazardous atmosphere (specify)
   - ☐ none ☐ toxicity ☐ flammability ☐ oxygen deficiency/excess ☐ mechanical
   - ☐ electrical ☐ corrosive ☐ temperature ☐ noise ☐ ionizing radiation

   ***** If hazardous atmosphere exists, must also have a site-specific confined space plan***

B. **DETERMINE** soil type (specify) ☐ A ☐ B ☐ C ☐ unknown

1. ☐ Visual test performed
2. ☐ Manual test performed (specify)
   - ☐ plasticity ☐ dry strength ☐ thumb ☐ instrument ☐ drying

C. **SELECT** method of employee protection SPECIFICATIONS ON-SITE

1. Sloping and benching systems: WAC 296-155-657(2)
   - ☐ Option 1 – 1 1/2H: 1V (34 degrees measured from H)
   - ☐ Option 2 – design using Appendices A and B
   - ☐ Option 3 – design using other tabulated data
   - ☐ Option 4 – design by registered professional engineer
2. Shoring or shielding systems:
   - ☐ Option 1– design using manufacturer's tabulated data
   - ☐ Option 2– design using other tabulated data
   - ☐ Option 3– design by registered professional engineer

D. **INSPECT PRIOR TO** opening an excavation, DAILY and AS CONDITIONS CHANGE when employee exposure can be reasonably anticipated, the excavation, adjacent areas and protective systems:

1. ☐ Surface encumbrances removed/supported as necessary
2. ☐ Underground installations located
   - ☐Utilities contacted prior to opening
   - ☐Utilities contacted as approach during project
   - ☐Installations protected, supported, removed
3. ☐ Access/egress
   - ☐Structural ramps designed by competent person
   - ☐ Maximum employee lateral travel length 25 feet
4. ☐ Exposure to vehicular traffic protected
5. ☐ No employee exposure to falling loads
6. ☐Warning system for mobile equipment (specify)
   - ☐ barricades ☐ hand or mechanical signals ☐ stop logs
7. ☐ Hazardous atmospheres
8. ☐ Hazards associated with water accumulation
9. ☐ Stability of adjacent structures (specify)
   - ☐ shoring ☐ bracing ☐ underpinning ☐ engineer o.k.

10 ☐ Fall protection (specify)
   - ☐ walkways with guardrails ☐ Other

Index

Assured Ground Program, 62
Authority, Responsibilities and Lines of, 16
Back Safety, 52
Behavior Based Safety, 2
Bloodborne Pathogens, 18, 45
Communications, 8
Competent Persons, 17
Compressed Air, 53
Critical Lift Plan, 41
Drills and Exercises, 9
Drugs and Alcohol, 21
Emergency, 2, 5, 6, 7, 8, 9, 10, 11, 12, 13, 18, 19, 61, 88
Energy Source Hazard Identification Tool, 26
Evacuation, 9
Excavation, 6, 5, 17, 27, 30, 43, 90
Excavation/Trenching Plan, 43
Explosives & Firearms, 53
Fall Protection, 30, 42, 87
Fatigue, 52
Fire, 2, 3, 7, 8, 10, 11, 13, 31, 88
Fitness for Duty, 21
Flammable Gases, 53
Flex N Stretch, 51
HASP Purpose and Objectives, 1
Hazard Identification Cards, 27
Hazardous Waste, Control and Disposal of, 60
Hazards, 6, 1, 6, 19, 26, 27, 29, 30, 31, 33, 37, 39, 43, 52, 54, 58, 60, 86, 88
Health Hazard Communication Program, 59
Hearing Conservation, 44
Heat/Cold Stress Monitoring Plan, 38
High Hazard Permits, 27
housekeeping, 1, 13, 53
Housekeeping, 46, 53
Incident, 1, 2, 3, 5, 6, 14, 55, 69
Incident Free Performance of Work, 2
Inspections, 20, 21, 56, 87
Investigation, 1, 3, 5, 14, 19
Job Loss Analysis (JLAs), 26
Jobsite Tasks, 6
Knife Policy, 53
Ladder Safety, 54
Lifting Policy, 52
Lockout / Tag Out, 63
Lone Worker Safety Procedures, 37
Loss Prevention Self Assessment (LPSA), 26
LPS, 1, 3
Management of Change, 3
Medical Monitoring, 21
Medical Support Plan, 7
Medical Surveillance, 21
Motor Vehicle Safety, 55
Near miss, 3, 14
Non-emergency Medical Incident, 8
Operational Discipline, 3
Permit, 27, 55, 85
Permit to Work (PTW) Authority, 27
Petroleum Products, Control and Dispensing of, 61
Physical Qualifications, 21
Planned Preventative Maintenance, 28
Power Tool Use, 55
PPE, 6, 7, 18, 24, 28, 29, 31, 33, 39, 46, 53
PPM Organizational Chart, 15
Professional Conduct, 17
Regulatory Requirements, 3
Reporting, 1, 3, 5, 14, 17, 19, 69
Respiratory Protection Plan, 57
Return to Work, 9
Safety and Health Policy, 1
Safety Meetings, 19, 20
Scope of Work, 4
Severe Weather, 34, 41
Short Service Employees, 19
Site Access and Security, 37
Site and Traffic Control, 36
Site Control Measures, 37
Site Hazard Analysis Process, 26
Spill, 3, 11, 12, 61
Stop Work Authority, 2
Tenets of Operational Excellence, 2
Tobacco Smoke, 52
Training, 3, 18, 19, 45, 48, 49, 58, 59, 60, 61, 87
Unknown Material, 61
Work Limitations, 5
Work Zone Access, 37
Working Overhead, 54

APPENDIX E
Contingency Plan

Contingency Plan

Avery Landing Site
Avery, Idaho

for
U.S. Environmental Protection Agency on Behalf of Potlatch Land and Lumber, LLC

May 13, 2013

GeoEngineers

Plaza 600 Building
600 Stewart Street, Suite 1700
Seattle, Washington 98101
206.728.2674

Contingency Plan

Avery Landing Site
Avery, Idaho

File No. 2315-016-02

May 13, 2013

Approvals:

Signature: Date: May 13, 2013

John M. Herzog, PhD, Principal, GeoEngineers

Signature: Date: May 13, 2013

Robert S. Trahan, Environmental Geologist, GeoEngineers

Signature: Date: May 13, 2013

Mark J. Lybeer, Quality Assurance Leader, GeoEngineers

RST:JMH:csv

Disclaimer: Any electronic form, facsimile or hard copy of the original document (email, text, table, and/or figure), if provided, and any attachments are only a copy of the original document. The original document is stored by GeoEngineers, Inc. and will serve as the official document of record.

Copyright© 2013 by GeoEngineers, Inc. All rights reserved.

GeoEngineers

Table of Contents

1.0 INTRODUCTION E-1

1.1. Project Personnel and Roles E-1
1.2. Physical Description and Site Contact Information E-2
1.3. Schedule of Work E-2
1.4. Historical and Background Information E-3
1.5. Project Description E-3
1.6. Coordination With Local and Federal Agencies E-3

2.0 HEALTH AND SAFETY E-4

3.0 CONSTRUCTION CONTINGENCY E-4

3.1. Construction Site and Equipment E-4
3.2. Spill Planning and Prevention E-5
3.2.1. Training E-5
3.2.2. Spill Response Materials and Equipment E-5
3.2.3. Inspections and Security E-5
3.2.4. Secondary Containment E-6
3.3. Spill Response E-7
3.3.1. Spill Containment/Cleanup – Upland Areas E-8
3.3.2. Spill Containment/Cleanup – In-Water Areas E-8
3.4. Spill Notification E-9

4.0 EMERGENCY RESPONSE PLAN E-10

4.1. Emergency Contacts E-10
4.2. Injury/Accident Emergency Procedures E-11
4.3. Fire Emergency Procedures E-11
4.4. Accidental Disruption of Utilities E-11

5.0 LIMITATIONS E-11

6.0 REFERENCES E-12

1.0 INTRODUCTION

This Contingency Plan has been prepared to describe the measures that will be considered and taken in the case of an emergency and to prevent and, if necessary, contain and clean up oil spills, hazardous material spills, or untreated groundwater that may occur on-Site during implementation of the Avery Landing Removal Action. The purpose of this Contingency Plan is to establish procedures that will be utilized in the event of an emergency and establish procedures, methods, and equipment to prevent the release of oil, hazardous materials, or untreated groundwater to water bodies or upland areas during the removal action. This plan has been prepared based on project information available at the time it was prepared.

This Plan has been developed to provide the project staff with information and resources to respond in the case of an emergency and to prevent and respond to spills related to construction activities. The Plan recognizes that each spill likely presents a unique event requiring individual evaluation and response. This Plan therefore is intended to be utilized as a general guidance document. In the event of a spill, actions taken will be appropriate to the specific situation.

1.1. Project Personnel and Roles

The Avery Landing Removal Action will be performed by Potlatch Land and Lumber, LLC (Potlatch) and their contractors under oversight by the United States Environmental Protection Agency (EPA). Pacific Pile and Marine (PPM; Cleanup contractor for Potlatch) will be responsible for the implementation of the removal action construction, improving/maintaining access roads, implantation and monitoring of Best Management Practices (BMPs), and spill prevention and control. GeoEngineers, Inc. (GeoEngineers; environmental engineer for Potlatch) will be responsible for providing on-Site technical assistance, engineering support and for field-screening, collecting analytical samples, and documenting the removal action. Key personnel for the Avery Landing removal action are summarized in the following table.

Project Role	Name Organization	Telephone Email Address
Regulatory Project Manager/ On-Scene Coordinator	Earl Liverman EPA	208.664.4858 Liverman.earl@epamail.epa.gov Coeur d'Alene Field Office, 1910 Northwest Boulevard, Suite 208 Coeur d'Alene, Idaho 83814
Potlatch Project Manager	Terrance Cundy Potlatch	208.301.0410 Terry.Cundy@potlatchcorp.com 530 S. Asbury, Suite 4 Moscow, Idaho 83843

Project Role	Name Organization	Telephone Email Address
Technical Project Manager	John Herzog GeoEngineers	206.406.6431 jherzog@geoengineers.com 600 Stewart Street, Suite 1700 Seattle, Washington 98101
Task Manager/Field Coordinator	Robert Trahan GeoEngineers	206.239.3253 rtrahan@geoengineers.com 600 Stewart Street, Suite 1700 Seattle, Washington 98101
Construction Superintendent	Craig Cearley Pacific Pile and Marine	206.909.1798 craigc@pacificpile.com 582 S Riverside Drive Seattle, WA 98108

1.2. Physical Description and Site Contact Information

Site Name	Avery Landing Site
Site Location	The Site is located approximately one mile west of Avery, Idaho, on the north side of the St. Joe River. The site is located in the NW quarter of Section 16, Township 45 North, Range 5 East, Willamette Meridian, and is located at latitude 47° 13' 57'' North and longitude is 115° 43' 40'' West.
Property Size	Approximately 6 acres
Regulatory Site Contact	Earl Liverman, EPA On-Scene Coordinator
Nearest Residents	The eastern portion of the Site includes the Bentcik property, a seasonally occupied residence.
Primary Land Uses Surrounding the Site	North: Highway 50 ("St. Joe River Road"), owned by the Federal Highway Administration (FHA). South: St. Joe River (rural/recreational) East: Rural/recreational West: Rural/recreational

1.3. Schedule of Work

Removal action activities being performed by Potlatch will be completed summer/fall of 2013. Post-removal action groundwater monitoring will be performed following completion of the removal action as approved by EPA. A schedule for mobilization/demobilization, sampling activities, and reporting are presented in the Avery Landing Removal Action Work Plan (Work Plan; GeoEngineers, 2013).

1.4. Historical and Background Information

Detailed information regarding Site and operational history, previous investigations and regulatory history and cleanup actions are presented in EPA's EE/CA (E&E, 2010) and/or Potlatch's Supplemental Investigation Report (GeoEngineers, 2011) and is summarized in the Work Plan.

1.5. Project Description

In general, EPA's selected removal action requires the excavation of subsurface soil contaminated with petroleum hydrocarbons (diesel and heavy oil) and other contaminants that are comingled and cannot be segregated. Removal of this material is expected to significantly reduce or eliminate the source of contamination at the Site and to prevent the continued discharge of petroleum hydrocarbons and hazardous substances into the St. Joe River. Residual contamination remaining at the Site is expected to attenuate by way of natural processes and the progress of the attenuation will be monitored over-time, following the completion of the removal action.

The objectives of the removal action are to:

- Remove the remaining components of the product containment, collection, and extraction systems that were installed as part of the 1994 and 2000 removal actions;
- Remove soil exceeding field screening methods within the upland and river bank areas;
- Remove, treat, and/or manage petroleum product that is present as light Non-Aqueous Phase Liquids (LNAPL) on groundwater within the excavations;
- Dispose of waste streams in accordance with Comprehensive Environmental Response, Compensation, and Liability Act (CERCLA) off-site rule requirements; and
- Restore portions of the Site affected by the removal action including river bank reconstruction, backfilling, compaction, grading and re-vegetation.

The conceptual design and preliminary approach for the removal action that will be performed by Potlatch is summarized in the Work Plan.

1.6. Coordination With Local and Federal Agencies

Potlatch and their contractors will coordinate with local law enforcement, Shoshone County, Benewah County, and the United States Forest Service (USFS) during the implementation of this removal action. Contact information for these agencies is listed below:

- Shoshone County Planning Department– 208.752.8891
- Benewah County Planning Department– 208.245.3212
- USFS Avery Ranger District – 208.245.4517
- Shoshone County Sheriff Office – 208.556.1114
- Benewah County Sheriff Office – 208.245.2555
- Shoshone County Fire Department – 208.784.1188
- Benewah County Fire Department (St. Maries)– 208.245.5253

Local law enforcement (Benewah County Sheriff, Shoshone County Sheriff), Shoshone County, Benewah County, and the USFS will be notified of the planned construction dates and the types, quantity and frequency of haul trucks that will be expected to be traveling to and from the Site in accordance with the Public Outreach Plan, included as Appendix F of the Work Plan.

2.0 HEALTH AND SAFETY

Construction activities will be completed in general accordance with the requirements of the Federal Occupational Safety and Health Act (29 CFR 1910, 1926). These regulations include requirements that workers are to be protected from exposure to contaminants.

Health and Safety Plans (HASPs) describing actions that will be taken to protect the health and safety of GeoEngineers, Potlatch and Pacific Pile and Marine (PPM) personnel is provided in Appendix D of the Work Plan.

3.0 CONSTRUCTION CONTINGENCY

3.1. Construction Site and Equipment

As part of Site preparation, access roads, construction staging areas, contaminated soil staging pads, water treatment area, and temporary facilities will be constructed to support the removal action. Construction of access roads and staging pads may require limited grading and placement of a geotextile and/or gravel on the graded surface. The actual locations of the temporary access roads, staging areas, equipment pads, temporary construction facilities (travel trailer, water treatment system, temporary utilities, etc.) and vehicle loading zones will be determined in the field prior to the start of the contaminated material soil excavation. Temporary staging, water detention and other facilities will be located in areas that will not interfere with construction operations or vehicle traffic.

Construction equipment expected to be used on-site is expected to include at least the following:

- Excavator(s);
- Off-road hauling trucks;
- Rollers;
- Fueling trucks;
- Water trucks;
- Support vehicles;
- Portable generators;
- Water pumps; and
- Water treatment system, including electro-coagulation (EC) treatment housing, storage/settling tanks, medial filters, granular activated carbon vessels, and associated piping and fittings.

3.2. Spill Planning and Prevention

3.2.1. Training

All personnel entering the construction Hot Zone (i.e., within 10 feet of any boring, open excavation, contaminated soil stockpile or water treatment area) will have received training on the proper procedures for Spill Response Containment, CPR/First Aid, 40 hour Hazardous Waste Operations training in accordance with 29 CFR 1910.120 with annual 8 hour refresher training, Trenching and Excavation Competent Person Training and Confined Space Entry Training (if conditions warrant); or be accompanied by a person with the training.

3.2.2. Spill Response Materials and Equipment

Spill prevention kits will be stored at designated locations such as fueling and hazardous material storage areas at the Site. Spill prevention kits Spill Kits will, at a minimum, the following:

- Spill response procedures sheet;
- Oil absorbent pads;
- Water-based absorbent pads;
- Plastic sheeting;
- 5-gallons of loose absorbent material (i.e., kitty litter, floor sweep or similar);
- Heavy duty garbage bags;
- Shovel;
- Broom; and
- Spill report form.

Supplies used will be replaced to protect the integrity of spill response efforts at the Site. All personnel will be informed on the location of the spill prevention kits and will be familiar with spill prevention and response procedures prior to the start of work.

3.2.3. Inspections and Security

The cleanup contractor will conduct daily visual inspections at the Site. Inspections for leaks, corrosions, or damage that could lead to a discharge of oil, hazardous material, or untreated groundwater will include an examination of all on-Site fuel storage tanks, construction equipment, fire protection equipment, and spill response equipment. However, it will be the shared responsibility of all Site personnel to monitor for and report any observed leaks, corrosions, or damage that could lead to the discharge of oil, hazardous material, or untreated groundwater.

Security measures will be implemented on-Site to prevent unauthorized access to fuel storage, material storage, and excavation areas. Temporary fencing, barricades, signage and/or traffic control flaggers will be used, as necessary, to control access to the Site both during working and non-working hours. As part of the construction mobilization, the cleanup contractor for Potlatch will be responsible for installing fencing and/or other means to restrict general public access to work

areas (i.e., construction staging, materials management, and excavation water detention areas) at the Site. Site access control will be maintained for the duration of the project.

3.2.3.1. CONSTRUCTION STAGING AREA

The staging area will be inspected daily for any spills or leaks. A spill resulting from equipment leaks including fuel tanks, equipment seals, or hydraulic lines will be immediately contained by using a spill pan or spill pad placed beneath the leak source. An undetected leak from parked equipment will, at minimum, be contained within the equipment staging area by a temporary berm.

3.2.3.2. FUELING STORAGE AREA

A fueling area will be designated for all refueling on the Site. This fueling area will be located in an upland area at least 100 feet away from the St. Joe River. All fuel tanks will be stored within a secondary containment. The proper equipment will be used to transfer fuel. Spill response equipment and fire extinguishers will be stored in a readily accessible location known by all construction personnel.

During non-working hours, flow and drain valves for fuel tanks will be securely locked in the closed position. Additionally, when not in use construction equipment used during the removal action will be securely locked to prevent unauthorized use.

The fueling area will be inspected daily for any spills or leaks. A spill during fueling operations will be contained and cleaned up immediately. The transfer of fuel into portable equipment will be performed using a funnel and/or hand pump, and a spill pad used to absorb any incidental spills/drips.

3.2.3.3. SOIL STOCKPILE AREA

Stockpile areas will be inspected daily. Any material lost as a result of wind, rain, erosion or overfilling of contaminated staging pads will be contained and cleaned up.

3.2.3.4. WATER TREATMENT AREA

The water treatment system (i.e., pipes, hoses, connection points, etc.) will be inspected daily for leaks. Observed leaks will be immediately contained by using a spill pan or temporary berm to prevent erosion and potential release of hazardous substances to the ground surface.

3.2.3.5. TEMPORARY HAUL ROADS

Temporary haul roads will be utilized during the removal action to transport equipment or materials during the removal action will be inspected daily. Incidental spills (e.g., fuel or oil leaks) from hauling equipment operating on the haul roads will be contained and cleaned.

3.2.4. Secondary Containment

Material handling and storage will be located in designated areas. Secondary containment will be used for fuel storage, water treatment, and contaminated soil stockpile areas to control any spills that could occur in these areas. Secondary containment for fuel tanks will consist of an impervious berm around the perimeter of the storage area with the capacity of at least 110% of the largest container. Secondary containment for the water treatment system will consist of an earthen dike encompassing the water treatment area lined with an impervious barrier. A working surface will be placed over the liner to prevent damage. In addition, piping will be used to route water from the

treatment area to the open excavation should a release occur. Staging pads constructed by EPA as part of their 2012 removal action may also be used to contain contaminated soil generated by the Potlatch removal action to prevent the release of hazardous substances.

Additional containment measures, including the use of spill pallets, berms, liners, or containment walls will be implemented as necessary to safeguard against the release of hazardous substances into uncontrolled work areas of the Site.

3.3. Spill Response

In general, any Site worker that observes a leak or spill will immediately respond to the situation by first attempting to stop the source of the leak or spill and turn off any ignition sources in the area. The employee will then alert personnel in the area of the spill, restrict access to the spill area as needed and contact the on-Site safety coordinator and the EPA On-Scene Coordinator. The most likely spills would be of motor oil from vehicles and equipment, hydraulic oil from equipment, antifreeze from equipment and vehicles, diesel from heavy equipment, or gas from vehicles. On-Site personnel, equipment, and materials will be mobilized to clean up the spill. An adequate supply of materials will be on hand at the Site to be used as a primary means of containing any oil or petroleum product spilled on land or in water while awaiting the arrival of a spill response team if the extent of the release exceeds the capacity of the on-Site personnel. The following spill equipment will be onsite:

- Emergency spill kit(s) and/or absorbents will be stored in appropriate areas around site;
- Sufficient waste oil receptacles shall be provided at the petroleum product storage area and at dispensing sites;
- A supply of trash bags will be kept in the job shack; and
- Copies of the manual on the proper employment and use of containment booms shall be maintained on all floating equipment.

If a spill or release cannot be controlled or injuries have occurred due to the release the following procedures should be followed:

- Evacuate immediate area, and provide care to anyone injured. Call 9-1-1 and follow the emergency procedures specified in the HASP. Note that a land based telephone line may be required if cell phone coverage is determined to be unreliable.
- If potential fire or explosion hazards exist initiate evacuation procedures. Call 9-1-1.
- Protect drains and/or surface water (river) by use of absorbent, booms and/or drain covers.
- Mobilize emergency spill response contractor to the Site, including:
    - H2O Environmental – 208.343.7867
    - NWFF Environmental – 208.242.3789
    - Olympus Technical Services, Inc – 208.562.5500
    - Rocky Mountain Environmental – 208. 524.2353

- Coordinate response activities with local emergency personnel (police, fire department, and USFS), if necessary.
- Be prepared to provide MSDS information to fire department, EMT, hospital or physician, if necessary.
- Notify appropriate agency if a release has entered the environment. Refer to spill notification requirements specified in Section 3.4.

3.3.1. Spill Containment/Cleanup – Upland Areas

In the event of a spill or release to the ground, cleanup operations will begin as soon as possible maximize the recovery amount of the spilled material and to minimize potential environmental impacts. General procedures for ground spills are:

1. **Stop the spill** – The leak or spill should be stopped by turn off nozzles or valves from the leaking container or shutting off the construction equipment, if it can be done safely. Use a wooden plug, bolt, band or putty on a puncture-type hole if possible.
2. **Contain and recover the spill** – If the spill or leak cannot be stopped, catch the flowing liquid using a pan, pail, hubcap, shovel or whatever is available. Spreading sorbent material, such as kitty litter, sand, straw, sawdust, wood chips, peat, sorbent pads, or dirt can stop the flow and soak up the petroleum.
3. **Collect the contaminated sorbent** – Brooms and shovels can be used to pick up the sorbent material and put it into buckets, garbage cans or barrels, on top of plastic sheeting or in steel drums. Fresh granular sorbent such as sand can then be re-spread on a roadway to control the residual slipperiness.
4. **Secure the waste** – Contaminated material generated by the spill will be contained on-Site pending disposal at a facility permitted to receive the waste.

Spills that occur in upland areas of the Site will be cleaned up immediately and in compliance with state and federal laws and regulations. Materials supplied closest to the spill location will be used to contain the spill and divert any material from entering the nearby water bodies. Spilled material and contaminated soils will be collected and placed in labeled and sealed drums or stockpiled and secured pending off-Site permitted disposal. All affected areas, equipment, and surfaces that have contacted the spilled material will be decontaminated. The waste generated in cleaning up the spill will be disposed of in accordance with the applicable state and federal regulations.

Spills that occur off of the Site during transport of contaminated materials are the responsibility of the transport company. The transport company will notify the appropriate authorities and Potlatch in the event that contaminated material generated from the Site is released. Potlatch will require the transporter to provide documentation that the spilled material has been cleaned up in compliance with applicable Federal, State and local regulations.

3.3.2. Spill Containment/Cleanup – In-Water Areas

In the event of a spill or release to the St. Joe River, cleanup operations will begin as soon as possible by trained personnel to maximize the recovery amount of the spilled material and to minimize potential environmental impacts. As indicated by the Work Plan, a silt curtain will be

deployed along the shoreline during the removal action to contain possible releases from the Site. General procedures for water spills are:

1. **Stop the spill** – The leak or spill should be stopped by turn off nozzles or valves from the leaking container or shutting off the construction equipment, if it can be done safely. Use a wooden plug, bolt, band or putty on a puncture-type hole if possible.
2. **Contain and recover the spill** – Oil containment booms and/or absorbent materials downstream of the spill source will be deployed to contain the spill.
3. **Collect the contaminated sorbent** – Recovery of any liquid spill material into water is to be initiated immediately with, skimmers, skimming pumps and/or absorbent materials stored on Site adjacent to the river. The specific location of spill response equipment will be determined in the field. Site personnel will be made aware of the location of these supplies.
4. **Secure the waste** – Recovered product will be transferred to the on Site water treatment system to be processed.

If necessary, an Emergency Response Contractor may be called to contain and clean up the spill. The National Response Center and the State of Idaho Communication Center will also be notified of the incident. All affected areas, equipment, and surfaces that have contacted the spilled material will be decontaminated. The waste generated in cleaning up the spill will be disposed of in accordance with the applicable state and federal regulations.

3.4. Spill Notification

If any incident or change in Site conditions during the work causes or threatens to cause a release or discharge of oil, hazardous material or substance, or untreated groundwater from the Site or an endangerment to public health or the environment, the EPA On-Scene Coordinator or EPA representative will be notified immediately. Spills or releases of oil or hazardous materials or substances into the environment may require additional notification to one or more Federal or State agencies. The release reporting requirements are dependent on the substance release, the location of the release, and the time period when the release occurred.

- Spills of petroleum products, which cause sheen on the waters of the US will be considered a reportable spill.
- Spills of hazardous materials or of hazardous waste, which exceed their reportable quantities, are a reportable spill.
- The person discovering the spill should report the release to the project Superintendent as soon as possible following the spill response procedures listed in Section 3.3. The Superintendent will gather information that is immediately available on the release and inform the GeoEngineers, Potlatch, and the EPA On-Scene Coordinator.

Spills of oil in harmful quantities must be reported to state and federal agencies. A harmful quantity is any quantity of discharged oil that violates state water quality standards, causes a film or sheen on the water's surface, or leaves sludge or emulsion beneath the surface. Phone numbers for reporting a discharge to the National Response Center and other federal and state agencies are provided below.

Spill Notification Contacts:

- National Response Center (NRC) – 800.424.8802
- EPA Region 10 24-Hour Spill Reporting Number – 206.553.1263
- Idaho Communication Center – 800.632.8000

If any doubt exists on the report-ability of the release, the release will be reported.

4.0 EMERGENCY RESPONSE PLAN

The HASP, which will be located on-Site for the duration of the project, includes directions to the nearest hospital and should be the primary reference for emergency procedures during any emergency.

4.1. Emergency Contacts

Cell phones will be carried by all Site personnel, however if cell phone coverage is not available at the Site, the contractor will have access to a land-based phone, and the location of the land-based phone will be known by all employees.

Emergency Contacts	
Ambulance/Police/Fire	9.1.1
Statewide Medical Emergency Response	208.846.7610
Northwest Medstar (Helicopter Evacuation)	800.422.2440
Shoshone Medical Center	208.784.1221
Avista Emergency Utility Line Locate	800.227.9187
Avista Utility Line Locate (Benewah and Shoshone Counties	800.398.3285
State Response Center	800.632.8000
National Response Center (NRC)	800.424.8802
EPA Region 10 24-Hour Spill Reporting Number	206.553.1263
Idaho Communication Center	800.632.8000
Idaho Department of Lands (St. Maries)	208.245.4551
United States Forest Service (St. Maries)	208.245.2531
United States Forest Service (Avery)	208.245.4517
Benewah County (St. Maries)	208.245.2555
Shoshone County (Wallace)	208.556.1114
Poison Control	800.732.6985

4.2. Injury/Accident Emergency Procedures

Get help -

- Send another worker to call 9-1-1 (if necessary).
- As soon as feasible, notify Potlatch Project Manager.

Reduce risk to injured person -

- Turn off equipment.
- Move person from injury location (if in life-threatening situation only).
- Keep person warm.
- Perform CPR (if necessary).

Transport injured person to medical treatment facility (if necessary) -

- By ambulance (if necessary) or contractor vehicle.
- Stay with person at medical facility. The nearest hospital is located in Wallace, ID and a map to the nearest hospital is included in the HASP presented in Appendix D of the Work Plan.

4.3. Fire Emergency Procedures

- Notify all personnel within the immediate area of the fire.
- Evacuate the area in the event the fire cannot be extinguished safely.
- Go directly to the closest telephone and contact the Fire Department by calling 9-1-1.
- Notify the on-Site safety coordinator.

4.4. Accidental Disruption of Utilities

Prior to starting work actions will be taken to locate utilities at the Site. The following provides the procedure for the accidental disruption of utilities.

- Notify all personnel within the immediate vicinity, shut down all equipment.
- If the accidental release of natural gas is caused by contact with an underground utility, evacuate the area if the release of gas cannot be secured safely.
- Notification of on-site safety coordinator immediately.
- On- Site safety coordinator will contact Potlatch and will take appropriate actions including, but not limited to, contacting the appropriate utilities and/or Shoshone County.

5.0 LIMITATIONS

We have prepared this Site Specific Sampling Plan for use by the Potlatch Land and Lumber, LLC during the removal action at the Avery Landing Site. Within the limitations of scope, schedule and budget, our services have been executed in accordance with generally accepted environmental science practices in this area at the time this report was prepared. No warranty or other conditions expressed or implied should be understood.

Any electronic form, facsimile or hard copy of the original document (email, text, table, and/or figure), if provided, and any attachments are only a copy of the original document. The original document is stored by GeoEngineers, Inc. and will serve as the official document of record.

6.0 REFERENCES

E & E (Ecology and Environment, Inc.), "Draft Final Engineering Evaluation /Cost Analysis, Avery Landing Site, Avery, Idaho," prepared for the United States Environmental Protection Agency, Region 10, dated December 2010.

GeoEngineers, Inc., "Draft Removal Action Work Plan, Avery Landing Site, Avery, Idaho" prepared for United States Environmental Protection Agency on Behalf of the Potlatch Land and Lumber, dated May 10, 2013.

GeoEngineers, Inc., "Supplemental Site Investigation, Avery Landing Site, Avery, Idaho," GEI File No. 2315-016-01, prepared for Potlatch Forest Holdings, Inc., dated November 9, 2011.

APPENDIX F
Community Outreach Plan

Community Outreach Plan

Avery Landing Site
Avery, Idaho

for
U.S. Environmental Protection Agency on Behalf of Potlatch Land and Lumber, LLC

May 13, 2013

GeoEngineers

Plaza 600 Building
600 Stewart Street, Suite 1700
Seattle, Washington 98101
206.728.2674

Community Outreach Plan

Avery Landing Site
Avery, Idaho

File No. 2315-016-02

May 13, 2013

Approvals:

Signature: Date: May 13, 2013

Terrance W. Cundy, Manager – Silviculture, Wildlife and Environment, Potlatch

Signature: Date: May 13, 2013

John M. Herzog, PhD, Principal, GeoEngineers

Signature: Date: May 13, 2013

Robert S. Trahan, Environmental Geologist, GeoEngineers

TC:RST:JMH:csv

Disclaimer: Any electronic form, facsimile or hard copy of the original document (email, text, table, and/or figure), if provided, and any attachments are only a copy of the original document. The original document is stored by GeoEngineers, Inc. and will serve as the official document of record.

Copyright© 2013 by GeoEngineers, Inc. All rights reserved.

GeoEngineers

Table of Contents

1.0 INTRODUCTION F-1

2.0 BACKGROUND INFORMATION F-1

2.1. Site History F-1
2.2. Site Description/Location F-1
2.3. Previous Cleanup Actions and Investigations F-2

3.0 COMMUNITY BACKGROUND F-3

3.1. Community Profile F-3
3.2. History of Community Outreach F-3
3.3. Key Community Concerns F-4
3.4. Response to Community Concerns F-4
3.5. Summary of Communication Needs F-5
3.6. Potlatch's Community Outreach Program F-5
3.7. Outreach Plan F-5
3.8. Time Frame Summary for Community Outreach Activities F-5

4.0 CONTACT INFORMATION F-6

4.1. Removal Action F-6
4.2. Local, State and Federal Officials F-6
4.3. Media F-7

5.0 REFERENCES F-7

LIST OF FIGURES

Figure F-1. Vicinity Map

1.0 INTRODUCTION

This document presents the Community Outreach Plan (COP) to facilitate two-way communication between the community surrounding the Avery Landing Site (Site) and Potlatch Land and Lumber, LLC (Potlatch) to ensure that residents are informed of the planned removal action that will be completed at the Site and are provided opportunities to ask questions regarding the project.

This Community Outreach Plan addresses Avery Landing's relationship to the community (Section 2.0), provides a background of the community (Section 3.0), presents Potlatch's Community Outreach Program (Section 4.0), and provides a listing of resources available (Section 5.0).

2.0 BACKGROUND INFORMATION

2.1. Site History

The Site was used as a switching and maintenance facility for the Chicago, Milwaukee, St. Paul, and Pacific Railroad (CMSPR) from 1907 to 1977. Activities performed by the railroad at the facility included maintenance, refueling, and cleaning. On-site structures included a switchyard with train roundhouse and turntable, engine houses, and railroad maintenance and machine shops. As a refueling station, fuel oil was stored on-site, including the use of a 500,000-gallon above ground fuel oil tank.

Today, there is little remaining at the site to indicate its previous use, except concrete foundation slabs and remnants of rail lines. The eastern portion of the site is owned by Mr. Larry Bentcik, and is used on a seasonal basis. The western portion of the site is owned by Potlatch. Potlatch performed leveling and grading of the Site and reportedly used the area for temporary log storage. Potlatch also leased portions of the site to third parties for a variety of uses including log storage, parking, and trailer sites.

2.2. Site Description/Location

The Site is located in the St. Joe River valley in the Bitterroot Mountains in northern Idaho, approximately one mile west of the town of Avery, Shoshone County, Idaho (Figure 1). The Site is located directly adjacent to the St. Joe River to the south and Highway 50 to the north, at latitude 47°13'57" North and longitude 115°43'40" West.

The St. Joe River is designated a special resource water that is used for wild life habitat, recreation, and as drinking water for downstream residents. According to the Idaho Administrative Procedures Act (IDAPA) 58.01.02.110.11, the segment of the St. Joe River adjacent to the Site that could be impacted by contaminants found at the Site has the following designations: special resource water, domestic water supply, primary contact recreation, cold water communities, and salmonid spawning. The Site is located in a narrow and remote river valley, and the immediate area around the Site is residential, recreational, and commercial.

2.3. Previous Cleanup Actions and Investigations

The earliest known release of petroleum product associated with railroad operations into the St. Joe River was reported in the 1940's and observations of free petroleum product entering the river continued through 2012.

Two prior cleanup actions have been conducted at the Site. A free product recovery system was operated by Potlatch from 1994 through 2000, and recovery of 1,290 gallons of petroleum from groundwater was reported for this period. In 2000, Potlatch installed a containment wall and collections wells to prevent free product from flowing into the St. Joe River and a series of product extraction wells were installed at the Site.

The Site has been under investigation since the late 1980s. Most recently, EPA conducted a removal assessment at the Site during April 2007 (E&E, 2007). During this investigation, petroleum product was observed floating on groundwater in monitoring and recovery wells. Sampling completed as part of this investigation confirmed that contamination was also present in subsurface soils and groundwater. Additionally, free product was also observed seeping into the St. Joe River along approximately 200 feet of river bank.

In August 2008, the EPA entered into an agreement with Potlatch to perform an Engineering Evaluation and Cost Analysis (EE/CA), Biological Assessment (BA) and a Cultural Resources Evaluation (CRE) for Site. The EE/CA (E&E, 2010) evaluated environmental data, presented alternatives for cleaning up the contamination, and recommended a preferred cleanup alternative. The BA (E&E, 2011) evaluated how any cleanup action would affect threatened or endangered species, such as bull trout, and critical habitat. The CRE (AAR, 2010 and AAR, 2012) evaluated and documented any railroad remnants of historic importance.

During the summer and fall of 2009, Potlatch conducted an investigation (Golder, 2010) to gather additional soil, sediment, surface water, and groundwater data to better understand the nature and extent of contamination and to provide a framework for preparation of the draft EE/CA report.

The various investigations demonstrate that the elevated concentrations of hazardous substances and total petroleum hydrocarbons indicate that air (inhalation), direct contact (dermal), and soil (ingestion) human exposure pathways exist. Nearby residents, recreationists, and/or trespassers could be exposed to the contaminants. The potential for exposure is elevated further because Site access is unrestricted and limited vegetative cover may result in the redistribution of contaminants throughout the surrounding environment. Moreover, there exists Site-related chronic petroleum product releases to the St. Joe River and shoreline. Additionally, ecological receptors, including avian, mammalian, and plant receptors, could become exposed to elevated site contaminants and petroleum product found in soils through direct contact with the contaminated materials and with water and sediments contaminated by the materials; ingestion of soils, water, and sediments contaminated by the materials; and ingestion of contaminated food (e.g., sediment- or soil-dwelling insects, vegetation).

3.0 COMMUNITY BACKGROUND

3.1. Community Profile

Avery is a small unincorporated town set in the St. Joe River Valley in Shoshone County, Idaho. Avery is located in the middle of the St. Joe District of the Idaho Panhandle National Forest. Avery is a popular tourist attraction in northern Idaho for its beautiful wilderness and outdoor recreation. Common activities include camping, hunting, ATV riding, snowmobiling, hiking, horseback riding, mountain biking, fishing, and rafting. Avery has a population of about 57 permanent residents. The temporary population is much higher in the summer though due to seasonal workers for the United States Forest Service and the many summer homes in Avery and along the St. Joe River.

3.2. History of Community Outreach

On Monday, April 16, 2007, Judy Smith, EPA Community Involvement Coordinator made a visit to Avery and spoke with twelve people in the following locations:

- Avery Post Office
- Avery Gift Shop - Sheffy's General Store and Motel
- The Avery Trading Post
- Idaho Fly Fishing Company Store
- Avery School District #394 (K-8)
- Swiftwater Motel & RV Park
- US Forest Service, St. Joe Ranger District

On November 18th, Jeff Philip, EPA Community Involvement Coordinator conducted community interviews with six residents in the Avery Trading Post.

In recent weeks, Potlatch has reached out to the following individuals:

- Mr. Larry Bentcik (adjacent landowner) regarding the use of their property for staging of construction offices and crew quarters;
- The Federal Highway Administration (FHWA) regarding the potential concerns with planned excavation near Highway 50;
- Avery Sewer and Water and Avista regarding the rerouting of utilities during implementation of the removal action; and
- Benewah and Shoshone County officials regarding potential concerns for truck traffic during export/import activities.
- Ken Reid, Idaho State Archaeologist/Deputy State Historical Preservation Office (SHPO) regarding archeological resources.
- Idaho Department of Environmental Quality (IDEQ) regarding potential concerns for planned removal action activities adjacent to the St. Joe River.

On April 25th, Terry Cundy, Project Manager for Potlatch, conducted a community meeting to notifie the residents of the planned removal action.

3.3. Key Community Concerns

The community members EPA spoke with were very concerned about the economy. They wondered what was going on at the site from a curiosity perspective, but did not express concern about it. They were interested in any jobs created by the cleanup.

Mr. Larry Bentcik has expressed no concerns regarding the planned removal action or the use of the Bentcik property for clean activities during this time. An access agreement has been established between the Bentcik's and Potlatch for the use of their property during the removal action for construction staging.

FHWA has expressed concern with excavation activities extending into the road bed. However, based on the current offset from Highway 50 (ten feet from the road edge) and excavation side slope, FHWA agrees that it is unlikely that the road bed will be encountered. No other concerns have been expressed by FHWA. FHWA will be contacted if it becomes apparent that the roadway will be affected by the excavation activities.

Benewah County has requested that export and import of materials be restricted during major holiday weekends and that haul routes be established as to not damage weak road surfaces.

Shoshone County has requested that export and import of materials be restricted during major holiday weekends.

IDEQ has expressed no concerns regarding the planned removal action.

GeoEngineers (on behalf of Potlatch) notified Ken Reid, Idaho State Archaeologist/Deputy SHPO about their intent to document the identified archeological features of interest in accordance with the cultural resources review by Applied Archaeological Research (AAR, 2012).

A meeting was held with Avery Sewer and Water to discuss alternative approaches to address the sewer line and power to the pump station.

A phone conversation with AVISTA was held to discuss options for power on the site to support the cleanup activities and provide permanent power to Avery Sewer and Water and Bentcik.

No concerns were expressed by the residents of Avery during the April 25th community meeting.

3.4. Response to Community Concerns

Potlatch will encourage the contractor conducting the cleanup to use local resources as appropriate and to provide open communication with the public on the cleanup project. Additionally, the earthwork contractor will be made aware of the potential for disrupting the road bed for Highway 50 and cease excavation activities if road bed material is encountered. The waste material transport contractor for the removal action will coordinate with Benewah County for appropriate haul routes and restrict material export/import activities during holiday weekends.

3.5. Summary of Communication Needs

The following is a summary of communication needs for the Avery Landing removal action:

- Conduct meetings (and field reviews as appropriate) with Avery and Shoshone County public works personnel to address potential issues on infrastructure and public safety;
- Provide contact information to citizens.

3.6. Potlatch's Community Outreach Program

The overall goal of Potlatch's Community Outreach Program is to promote communication between citizens and Potlatch in the cleanup process. Potlatch will implement the community outreach activities described below.

3.7. Outreach Plan

Information will be distributed in the following ways:

- Potlatch will conduct meetings with county and city public works personnel, and law enforcement personnel to address infrastructure (road, sewer, water, power, telephone, etc.) and public safety concerns.
- Potlatch will conduct an open public meeting in Avery to introduce Potlatch personnel, the cleanup contractor, and the engineering contractor, and explain the 2013 summer project as well as provide written contact information (completed April 25th) .
- Conduct on-Site meetings as appropriate before mobilization.
- Post contact information on-site in a location readily available to the public. The sign will be posted as mobilization occurs and temporary construction infrastructure is established.

Opportunities for community input:

- The Site will be occupied at all times during the project by at least one of: construction contractor, engineering contractor, or Potlatch personnel.
- The contractors and Potlatch personnel may be contacted directly by phone or email.

3.8. Time Frame Summary for Community Outreach Activities

ACTIVITY	TIME FRAME
Meet with the Idaho State Historical Society.	On going
Meet with town of Avery public works.	On going
Meet with Shoshone County public works and law enforcement.	On going
Meet with Benewah County public works and law enforcement.	On going
Conduct public meeting.	May 2013Completed on April 25th
Conduct on-Site meetings.	May 2013 or as needed

ACTIVITY	TIME FRAME
Place contact information (below) on a sign readily available to the public.	May 2013
Revise the Community Outreach Plan	As needed

4.0 CONTACT INFORMATION

4.1. Removal Action

Name Organization	Project Role	Telephone Email Address
Terrance Cundy Potlatch	Potlatch Project Manager	Tel: 208.883.1668 Cell: 208.301.0410 Email: Terry.Cundy@potlatchcorp.com 530 S. Asbury, Suite 4 Moscow, Idaho 83843
Brandon Miller Potlatch	St Joe District Forester	Tel: 208.245.6436 Cell: 208.874.7588 Email: Brandon.Miller@potlatchcorp.com 1100 Railroad Ave Box 386 St. Maries, ID 83861
John Herzog GeoEngineers	Technical Project Manager	Tel: 206.728.2674 Cell: 206.406.6431 Email: jherzog@geoengineers.com 600 Stewart Street, Suite 1700 Seattle, Washington 98101
Will Clark Pacific Pile and Marine	Construction Project Manager	Tel: 206.331.3873 Cell: 206.300.1312 Email: wilc@pacificpile.com 582 South Riverside Drive Seattle, WA 98108
Earl Liverman U.S. EPA, Region 10	Federal On-Scene Coordinator	Tel: 208.664.4858 Fax: 208.664.5829 Email: Liverman.earl@epamail.epa.gov 1910 Northwest Boulevard, Suite 208 Coeur d'Alene, Idaho 83814

4.2. Local, State and Federal Officials

- Superintendent's Office Avery School District 394: 370 Old River Rd, Avery - 208.245.2479

- Postmaster General: 10 Depot Road, Avery - 208.245.3557
- Governor: C.L. "Butch" Otter
- Federal Senators: Mike Crapo & James E. Risch
- Representatives: Raul Labrador (ID 1st District)
- Idaho DEQ (Director): Curt Fransen

4.3. Media

- Newspapers:
  - St. Maries Gazette Record
  - Shoshone News Press - Kellogg, ID www.shoshonenewspress.com

5.0 REFERENCES

Applied Archeological Research, Inc. (AAR), "Results of a Cultural Resources Survey of the Avery Landing Rail Yard Project Area, Shoshone County, Idaho," prepared for Ecology and Environment, Inc., dated July 20, 2012.

Applied Archeological Research, Inc. (AAR), "Results of a Class I Inventory of the Avery Landing Project Area, Shoshone County, Idaho," prepared for Ecology and Environment, Inc., dated December 23, 2010.

Ecology and Environment, Inc. (E& E), "Biological Assessment, Avery Landing Site Removal Action, Avery, Shoshone County, Idaho," prepared for the United States Environmental Protection Agency, Region 10, dated June 21, 2011.

Ecology and Environment, Inc. (E& E), "Draft Final Engineering Evaluation /Cost Analysis, Avery Landing Site, Avery, Idaho," prepared for the United States Environmental Protection Agency, Region 10, dated December 2010.

Ecology and Environment, Inc. (E& E), "Removal Assessment Report, Avery Landing Site, Avery, Idaho", prepared for the United States Environmental Protection Agency, Seattle, Washington, dated July 31, 2007.

Golder Associates, Inc. (Golder), "Engineering Evaluation/Cost Analysis, Avery Landing Site, Avery, Idaho", prepared for Potlatch Land and Lumber, LLC, dated January 22, 2010.

Have we delivered World Class Client Service?

Please let us know by visiting **www. geoengineers.com/feedback**.

GeoEngineers