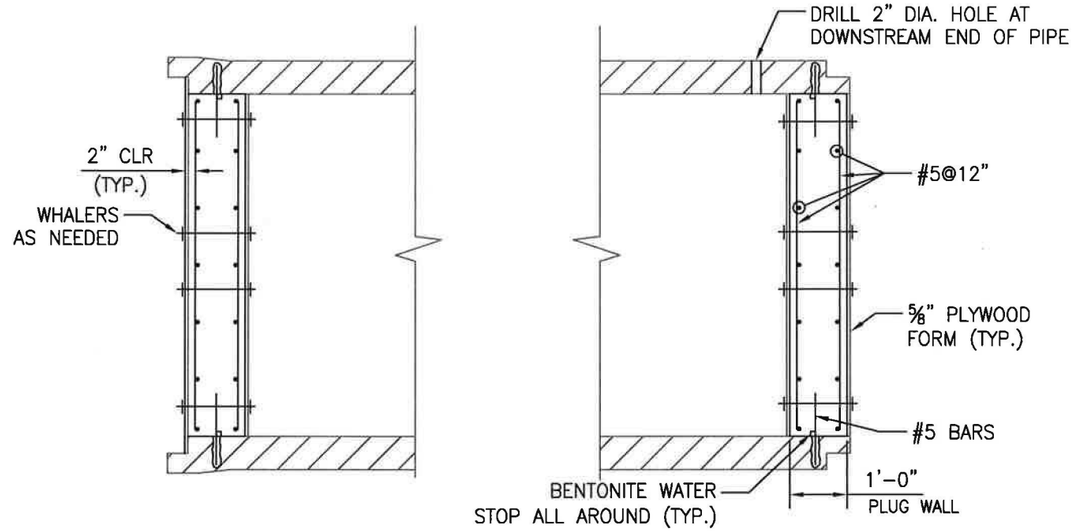

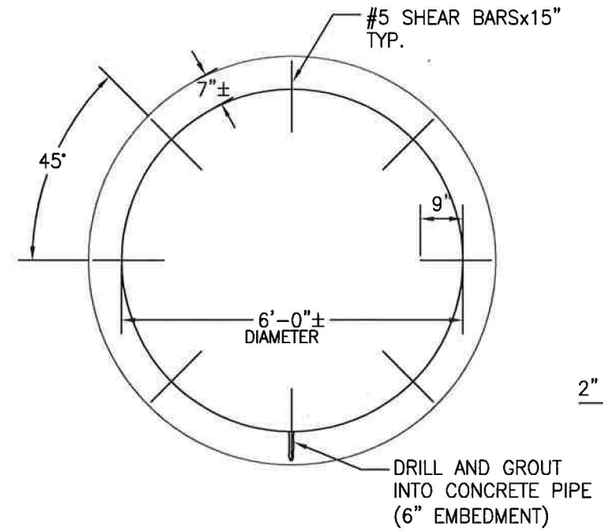

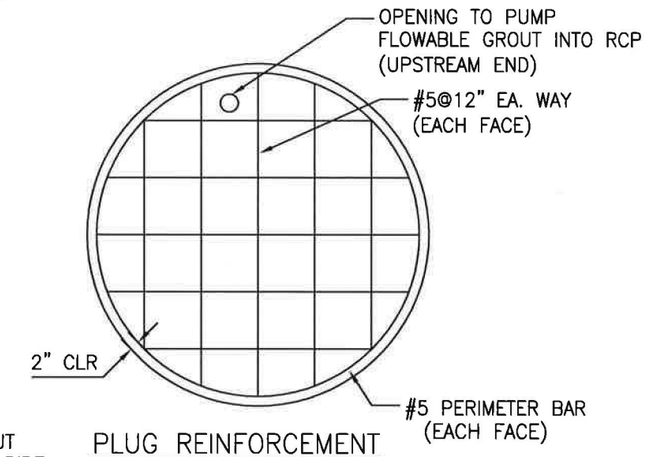

PLUG REINFORCEMENT

GENERAL CONDITIONS

GC1 REFER TO THE PROJECT SPECIFICATIONS FOR ADDITIONAL REQUIREMENTS AND INFORMATION.

GC2 ALL WORK SHALL COMPLY WITH THE VIRGINIA UNIFORM STATEWIDE BUILDING CODE (USBC), ACI BUILDING CODE (ACI 318–02), ASTM STANDARDS AND ANY OTHER APPLICABLE CODES, RULES AND REGULATIONS BY AGENCIES HAVING JURISDICTIONS. WHERE CODES OVERLAP, COMPLY WITH THE MORE STRINGENT REQUIREMENTS.

GC3. EXISTING DIMENSIONS SHOWN ARE APPROXIMATE. CONTRACTOR SHALL FIELD VERIFY ALL MEASUREMENTS.

GC4. ALL WORKMANSHIP MUST BE IN THE BEST PRACTICE OF THE TRADE AS DETERMINED BY THE OWNER/ENGINEER. ANY WORK NOT MEETING THESE STANDARDS WILL BE REJECTED.

GC5. THERE WILL BE NO SUBSTITUTION OF MATERIALS UNLESS APPROVED IN WRITING BY THE OWNER/ENGINEER.

GC6. CONTRACTOR IS TO DISPOSE OF ALL DEMOLITION MATERIALS AND LEAVE THE WORK IN A READY TO USE CONDITION.

GC7. CONTRACTOR IS RESPONSIBLE FOR ALL MEANS, METHODS, LABOR PROCEDURES AND SAFETY PRECAUTIONS FOR COMPLETING THE WORK.

GC8. CONTRACTOR IS RESPONSIBLE FOR ALL WORK DURING CONSTRUCTION UNTIL FINAL APPROVAL BY OWNER/ENGINEER AND LOCAL OFFICIALS.

GC9. WHERE SPECIFIC MANUFACTURER'S PRODUCT IS CALLED OUT, ALL MATERIALS AND WORK MUST COMPLY WITH THE MANUFACTURER'S STRICT RECOMMENDATIONS FOR INSTALLATION. IT IS THE CONTRACTOR'S RESPONSIBILITY TO OBTAIN INSTRUCTIONS AND TO THEN FOLLOW THEM.

CONCRETE

C1. ALL CONCRETE WORK SHALL COMPLY WITH ACI 301 "SPECIFICATIONS FOR STRUCTURAL CONCRETE FOR BUILDINGS" AND ACI 318 "BUILDING CODE REQUIREMENTS FOR STRUCTURAL CONCRETE."

C2. ALL CONCRETE SHALL BE PORTLAND CEMENT CONFORMING TO ASTM C150–05, TYPE III (HIGH EARLY STRENGTH) AND SHALL HAVE THE FOLLOWING MINIMUM COMPRESSIVE STRENGTH AT 28 DAYS: 3000 PSI

C3. CONTRACTOR SHALL SUBMIT CONCRETE MIX DESIGN TO THE OWNER/ENGINEER FOR APPROVAL. CONCRETE ACCEPTANCE SHALL BE ON THE BASIS OF "TRIAL MIXTURES" AS DESCRIBED IN ACI 318, SECTION 5.3. PROVIDE TRIAL MIXTURES FOR THREE DIFFERENT WATER–CEMENT RATIOS INDICATING 7–DAY AND 28–DAY COMPRESSIVE STRENGTH (FC); 1200 PSI GREATER THAN REQUIRED SHALL BE ACCEPTED.

C4. THE CONTRACTOR SHALL TAKE ONE SET OF SIX (6) STANDARD TEST CYLINDERS FOR EACH DAYS PLACEMENT AND THE OWNER'S TESTING AGENCY WILL PERFORM COMPRESSION TESTS ON TWO (2) CYLINDERS AT 7 DAYS AND 28 DAYS, LEAVING TWO (2) CYLINDERS IN RESERVE.

C5. FINE AGGREGATE SHALL BE WASHED NATURAL SAND CONFORMING TO ASTM C33. COARSE AGGREGATE SHALL BE WELL GRADED CRUSHED STONE OR WASHED GRAVEL CONFORMING TO ASTM C33 WITH A MAXIMUM SIZE OF 3/8" SIZE (AASHTO NO. 10).

C6. MAXIMUM SLUMP SHALL BE:
4" FOR REINFORCED WALLS.
12" FOR FLOWABLE BACKFILL

C7. ADD AIR ENTRAINING ADMIXTURE CONFORMING TO ASTM C260 TO PRODUCE MAXIMUM AIR BY VOLUME OF:
5% FOR REINFORCED WALLS.

C8. ALL CONCRETE SHALL BE TRUCK MIXED.

C9. ALL PLACEMENT OF CONCRETE AND REINFORCEMENT SHALL BE ACCORDING TO ACI 318 (INCLUDING ACI 305 FOR HOT WEATHER AND ACI 306 FOR COLD WEATHER CONDITIONS); AND CRSI RECOMMENDED PRACTICES FOR 'PLACING REINFORCING BARS'.

C10. REINFORCING BARS SHALL BE NEW ASTM A615, GRADE 60.

C11. ALL REINFORCING SHALL BE INSPECTED BY THE OWNER'S TESTING AGENCY BEFORE CONCRETE IS PLACED.

C12. NO CALCIUM CHLORIDE SHALL BE USED IN ANY CONCRETE.

NO.:	DATE:	DWN:	CHK:	APV:	DESCRIPTION:
0	02/16/16	CRM	EJM	RRB	ISSUED FOR CONSTRUCTION

REVISION RECORD

DRAWING TITLE
PLUG DETAIL

PROJECT
POSSUM POINT POWER STATION

gai consultants

CLIENT

DRAWN BY:	CHECKED BY:	APPROVED BY:
CRM	EJM	RBB
REVISION	SCALE: 3/8"=1'-0"	ISSUE DATE: 02/16/2016
A/0	SHEET NO.: 1 OF 1	

GAI FILE NUMBER: C150132-00-S-B2-S001_S00000_R00A
GAI DRAWING NUMBER: S-01

This drawing was produced with computer aided drafting technology and is supported by electronic drawing files. Do not revise this drawing via manual drafting methods.

ISSUING OFFICE: Pittsburgh | 385 E. Waterfront Drive, Homestead, PA 15120

GAI CAD FILE PATH: Z:\Energy\2015\C150132.00 – DOM – Possum Point PS CCB\CAD\Structural\C150132–00–S–B2–S001_S00000_R00A.dwg

© 2016 GAI Consultants

DRAFT - Preliminary

PLOTTED ON: 2/16/2016 3:39:01 PM PLOTTED BY: Christopher Muntz PLOT FILE: GAI.stb