Objective:

To grout in place an existing 72” pipe extending from a 30ft deep junction box under the existing roadway. The pipe must be grouted completely insuring no voids, honeycombs, or fishers are present once the grouting operation is complete; thereby insuring that flow will no longer have a route to seep through the pipe.

Implementation:

To perform the grouting operation, a plug will be constructed at the outfall end of the pipe. The plug will consist of a 1” thick steel plate that will be placed over the end of the 72” pipe. The steel plate will be equipped with a 2” steel pump sleeve protruding through the plate into the top of the pipe to be abandoned. The pump sleeve will be fastened to the plate by a continuous full penetration weld made with a 6011 root pass, and a 7018 cover pass.

The pump sleeve will extend 1ft on the outside of the steel plate to a 45deg elbow that will turn the sleeve up into the air. The sleeve will extend approximately 2ft on an upward facing angle past the 45deg bend. The end of the pump sleeve will be equipped with a 2” ball valve with a 2” NTP nipple.

Once the steel plate and pump sleeve are installed, a concrete dead man will be earth formed and poured on the outside of the steel plate to the top elevation of the existing 72” pipe. The dead man will incase the 2” pump sleeve out to the 45deg elbow thereby adding additional support to the sleeve. The dead man will be allowed to cure before grouting operations begin.

Once the plug has been constructed and the dead man has cured, the grouting operation can begin. On the inlet side of the pipe, a grade rod will be used to measure from the top of the junction box to the bottom the of the 72” pipe. This measurement will be used to insure that once grout has been pumped into the junction box, the final elevation of the grout is approximately 1 to 2 feet above the top of the pipe.

A line pump will be connected to the NTP nipple on the pump sleeve at the outfall end of the pipe, and 2000 psi concrete will be pumped from the low end of the pipe up to the junction box. The junction box will act as a vent allowing the volume of air in the pipe to be displaced out the top of the junction box as grout fills the pipe. By pumping the grout from the low end of the pipe, and pushing the air out the pipe up through the junction box, we can insure that no voids will be left in the pipe. The pipe will be filled and pumping will not stop until the grout has reached an elevation approximately 1[illegible]2 feet above the top of the pipe in the junction box. The grout in the junction box above the top of the pipe will introduce a head pressure on the grout in the pipe. By placing a head pressure on the grout in the pipe, any shrinkage or expansion of the grout will be experience in the structure above the pipe, instead of in the pipe itself; thereby insuring that the pipe stays fully filled with grout during the curing process.

Once the grout has reached the desired elevation in the junction box, the concrete pump will be shut off, and the 2” ball valve on the pump sleeve will be closed before the pump hose is disconnected. By closing the ball valve before the pump is disconnected, we can insure that grout is not lost, and the pressure inside of the pipe will be maintained.

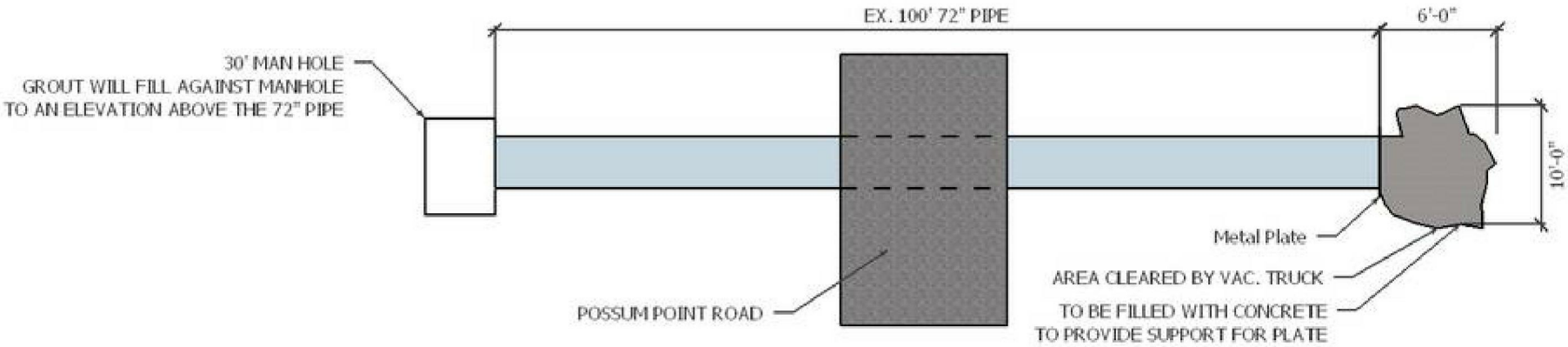

POSSUM POINT 72" PIPE
PLAN VIEW - NOT TO SCALE

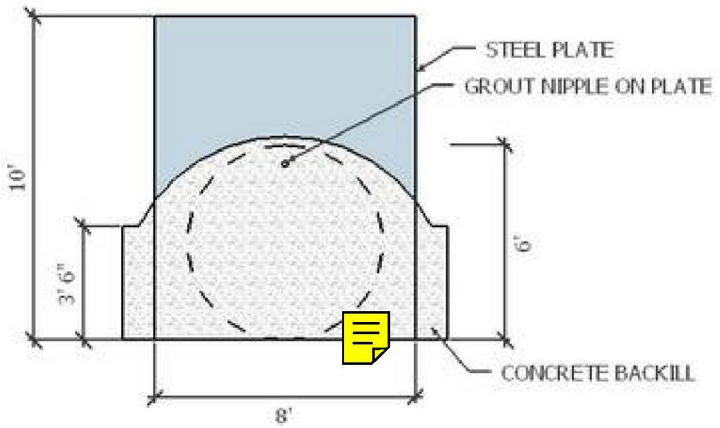

POSSUM POINT 72" PIPE OUTFALL END - VIEW

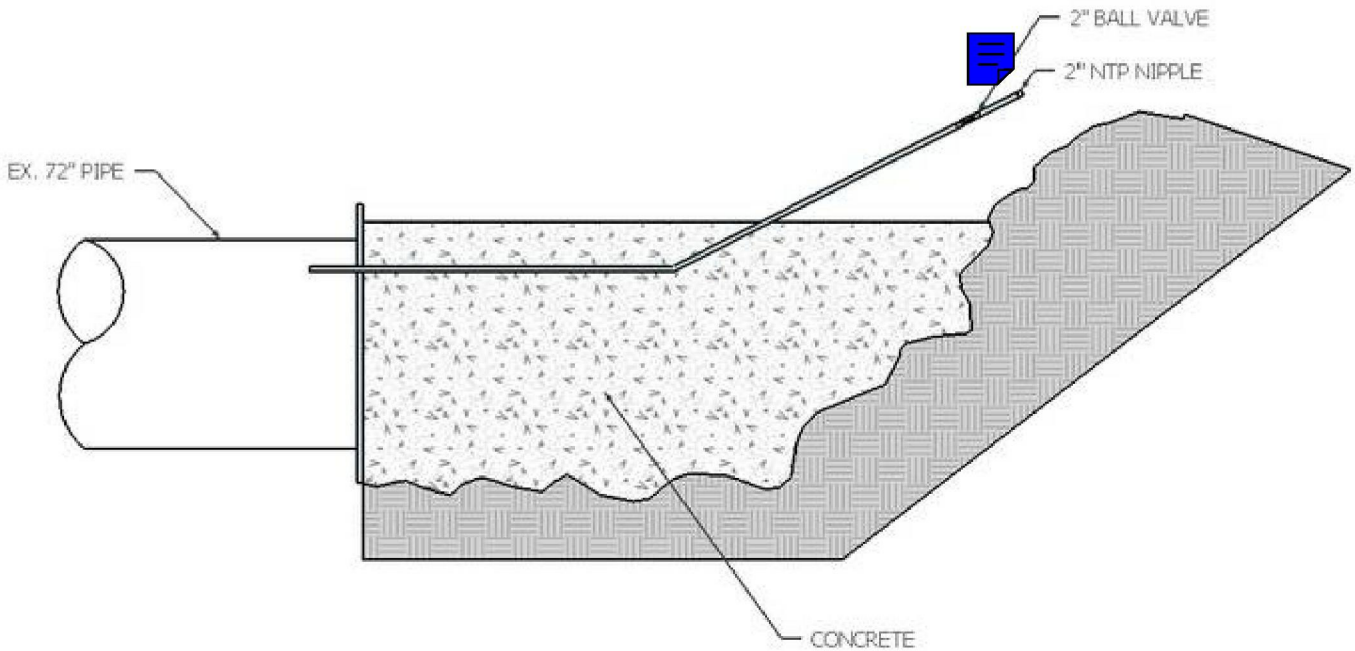

POSSUM POINT 72" PIPE
SECTION VIEW - NOT TO SCALE