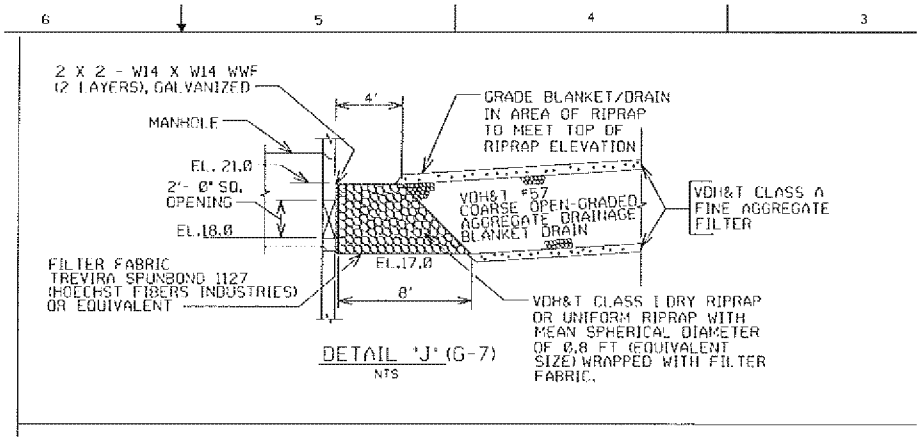

DETAIL 'J' (G-7)
NTS