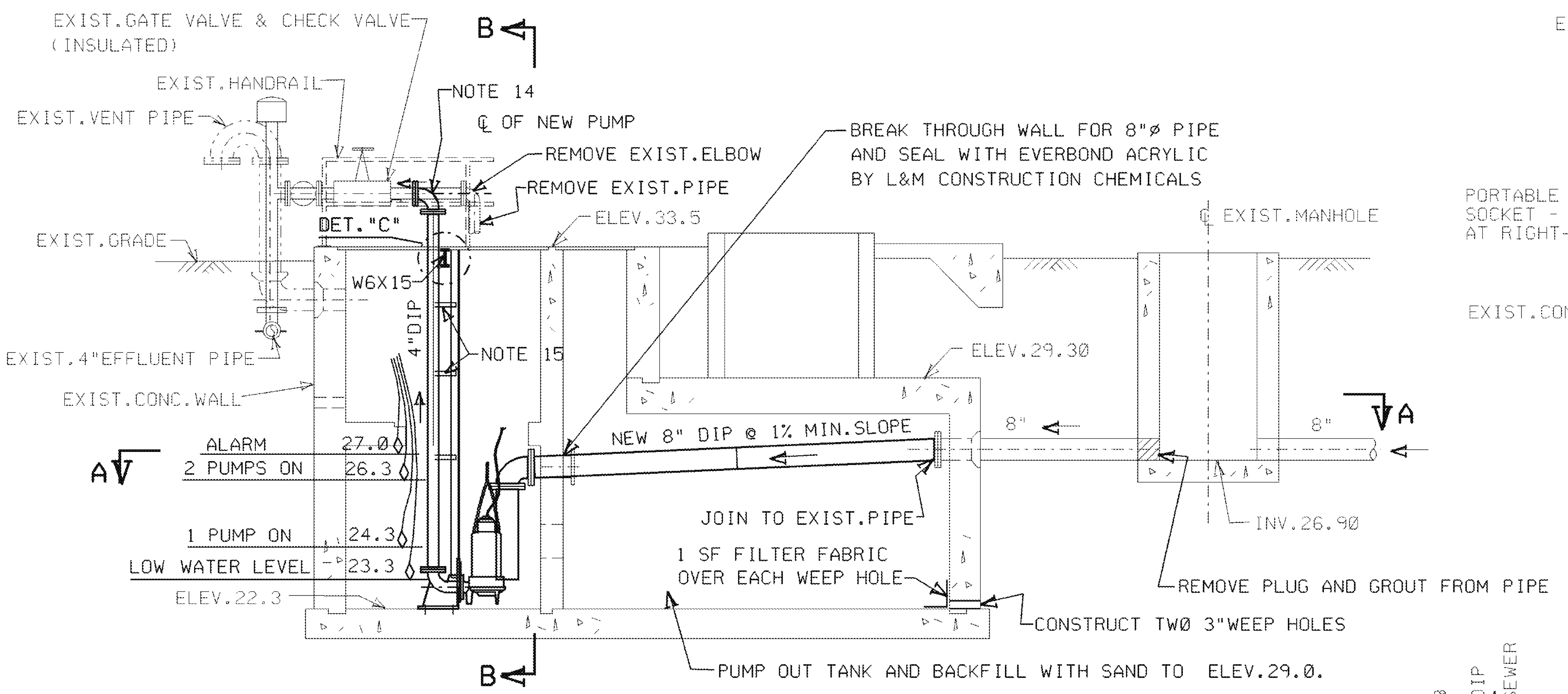

ELEVATION OF EXISTING WET WELL

1"= 3'

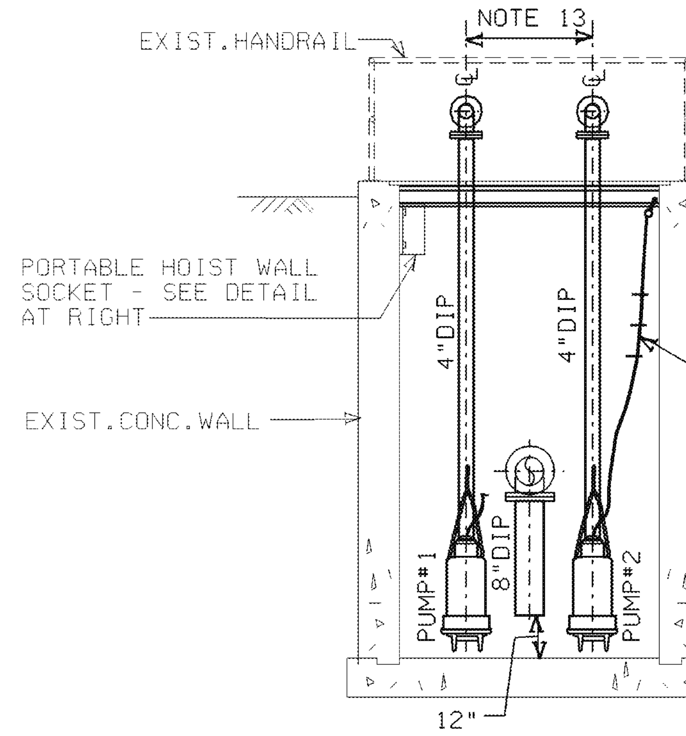

SECTION B-B

1"= 3'

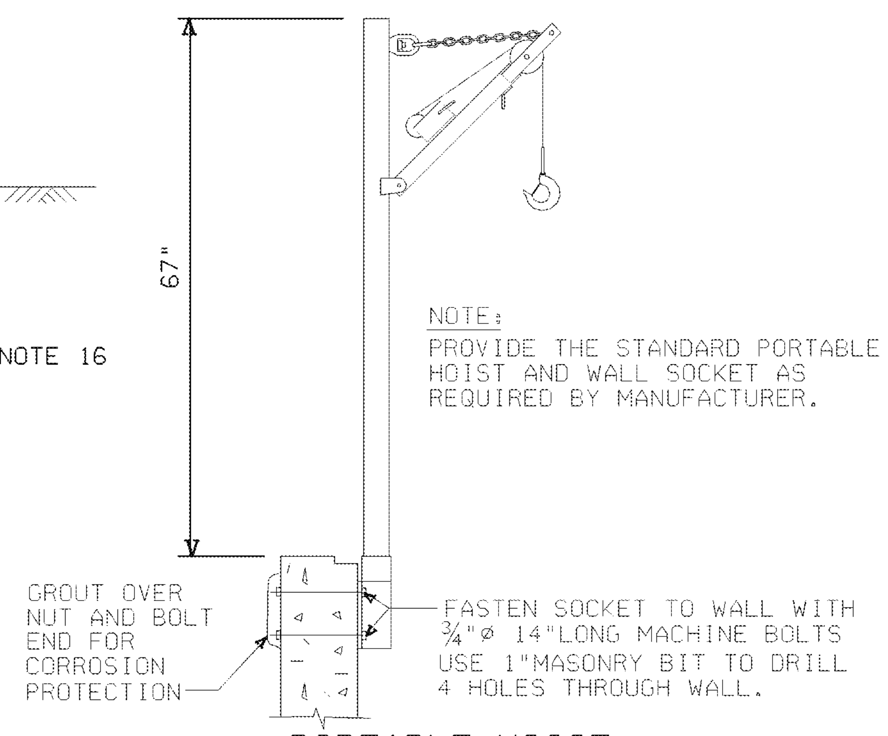

PORTABLE HOIST

NTS

D-3080 | **IMPELLER PERFORMANCE CURVES**

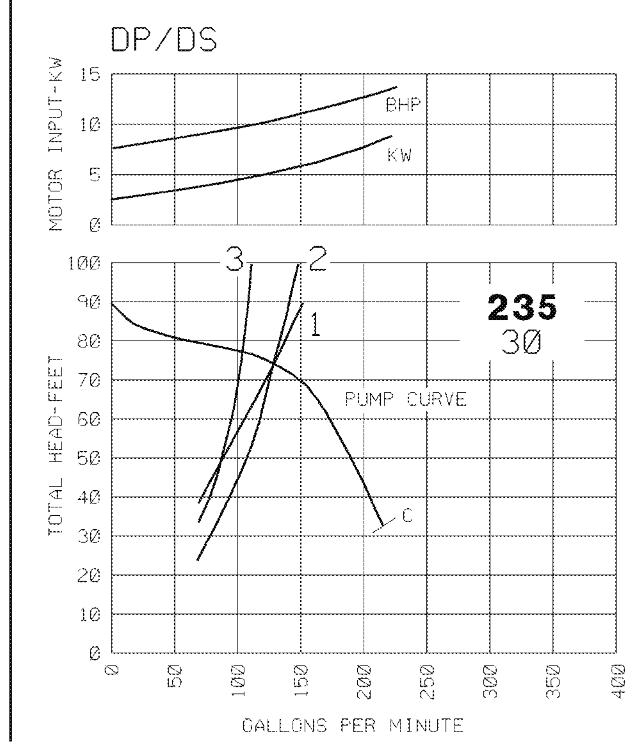

PLOTS OF SYSTEM CURVES UNDER THREE CONDITIONS

CONDITION ☆	DUTY POINT GPM	TDH
1	130	74'
2	130	74'
3	102	77'

☆ SEE APPENDICES 1,2,3&4 OF CALCULATION

PUMP CURVE
FLYGT MODEL #DP-3080

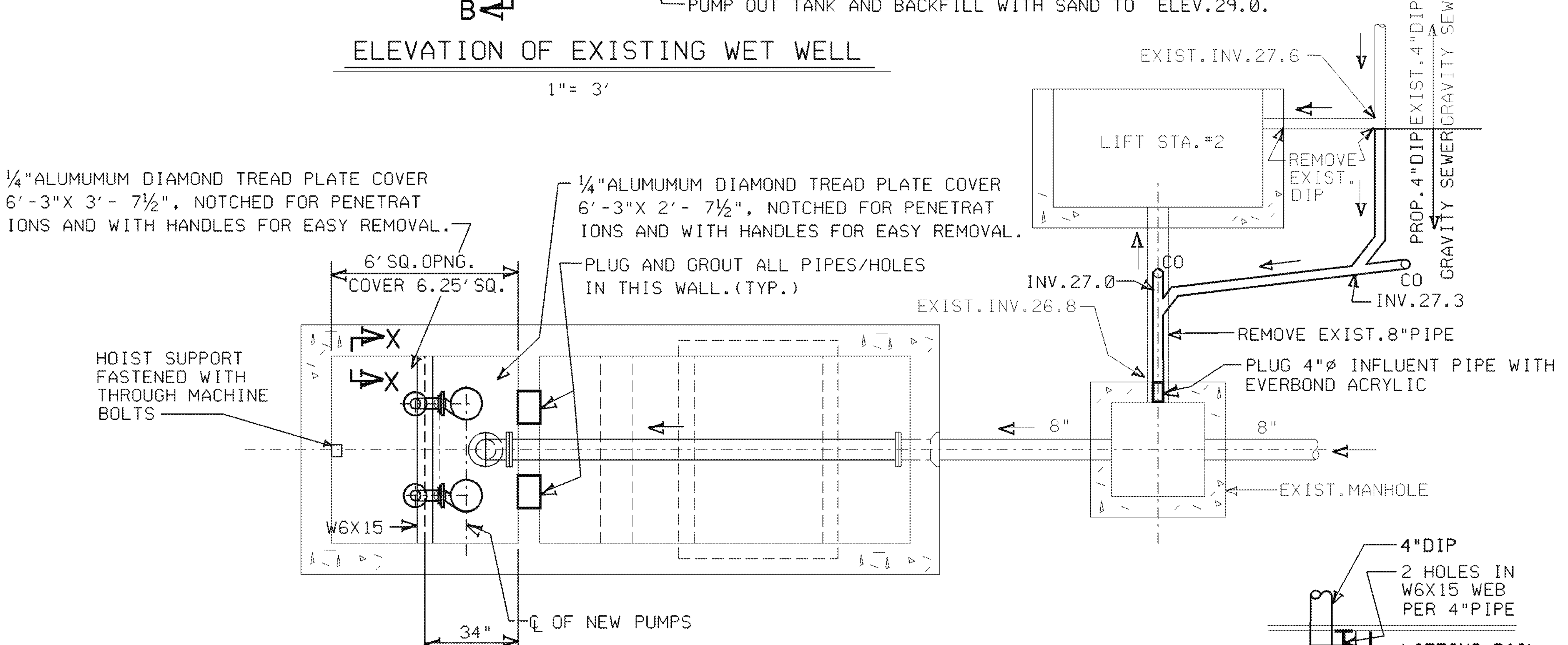

SECTION A-A

1"= 3'

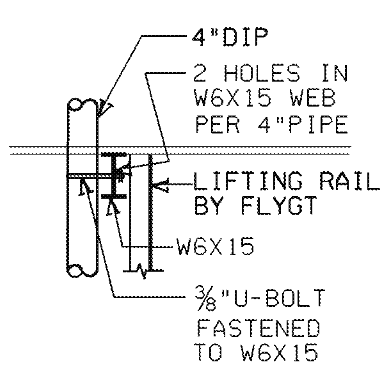

DETAIL "C"

NTS

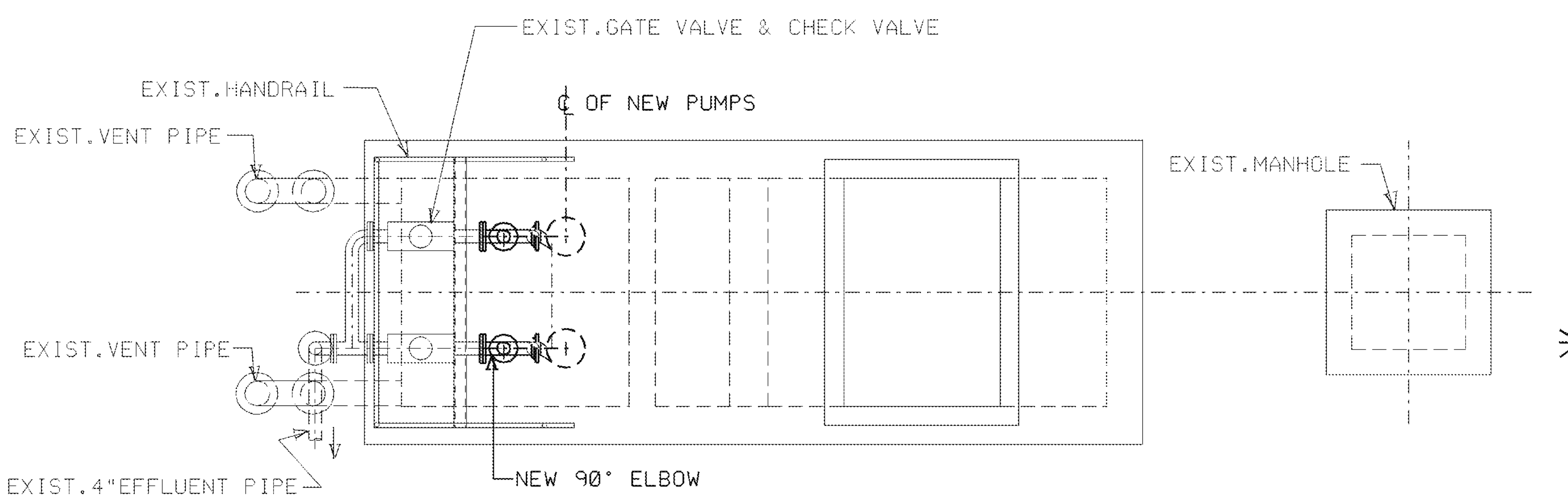

PLAN VIEW

1"= 3'

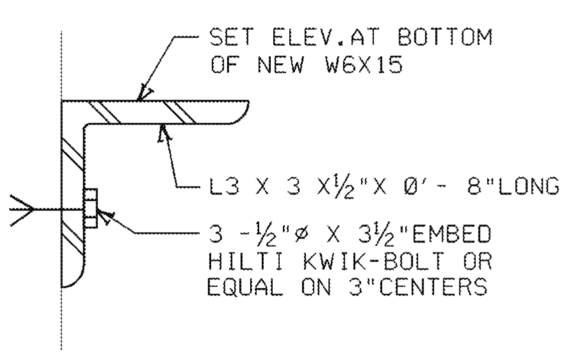

SECTION X-X

NTS

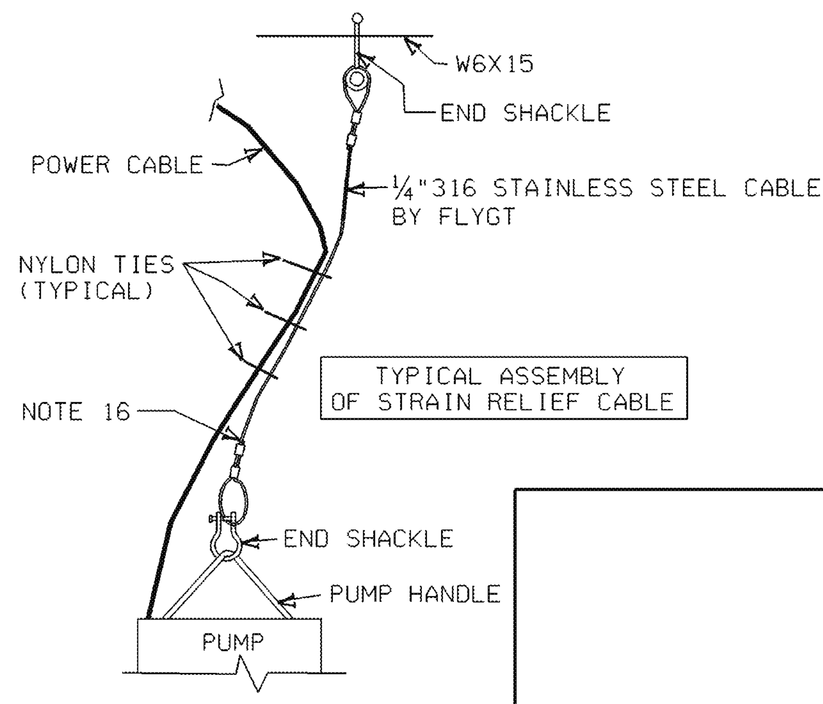

DETAIL "D" NTS

POWER CABLE STRAIN RELIEF

NOTES

1. ALL CONSTRUCTION SHALL BE IN ACCORDANCE WITH VDOT ROAD AND BRIDGE SPECIFICATIONS AND STANDARDS, PRINCE WILLIAM COUNTY DESIGN AND CONSTRUCTION STANDARD MANUAL AND THE COMMONWEALTH OF VIRGINIA SEWERAGE REGULATIONS.
2. PVC FORCE MAIN SHALL BE CLASS 200(DR14) ONLY AND SHALL BE INSTALLED IN ACCORDANCE WITH ANSI/AWWA C-900-81 OR CURRENT REVISION. JOINTS SHALL BE PUSH-ON-TYPE.
3. DUCTILE IRON PIPE SHALL BE CLASS 52 ONLY AND INSTALLED IN ACCORDANCE WITH AWWA C-600-82 OR CURRENT REVISION. JOINTS SHALL BE PUSH-ON.
4. DETECTABLE TAPE SHALL BE PLACED ONE FOOT ABOVE THE PVC PIPE AND SHALL HAVE A METALLIC CORE PROTECTED BY A PLASTIC JACKET.THE TAPE SHALL BE CONTINUOUSLY MARKED INDICATING THAT A FORCE MAIN IS BURIED. TAPE SHALL BE MAGNATEC AND SHALL BE SAFETY GREEN IN COLOR.
5. THRUST BLOCKING SHALL BE IN ACCORDANCE WITH DRAWING BH-1,2,3&4 OF THE PRINCE WILLIAM DESIGN AND CONSTRUCTION STANDARDS.
6. AIR RELIEF VALVE SHALL BE IN ACCORDANCE WITH DETAIL ON DRAWING BC-017.
7. LOCATIONS OF IDENTIFIED UNDERGROUND OBSTRUCTIONS ARE APPROXIMATE AND SHOULD BE VERIFIED BY THE CONTRACTOR.
8. FIELD ADJUST FORCE MAIN AS NECESSARY WITHIN 5 FEET OF DESIGN LOCATION TO AVOID OBSTRUCTIONS.
9. BACKFILL AND COMPACT IN ACCORDANCE WITH SPECIFICATIONS.
10. PUMPS SHALL BE FLYGT DP-3080 9HP IN ACCORDANCE WITH PUMP SPECIFICATIONS.
11. FLOW METER IS A 120V 4"10D1475 MINIMAG MAGNETIC FLOW METER BY FISCHER PORTER.
12. ALL MISCELLANEOUS METAL IN WET WELL SHALL BE HOT-DIPPED GALVANIZED STEEL OR ALUMINUM. ALL BOLTS SHALL BE 316 STAINLESS STEEL.
13. THIS DIMENSION SHALL MATCH ℄ TO ℄ DIMENSION OF EXISTING EFFLUENT PIPES.
14. REMOVE EXISTING PIPE AS NECESSARY TO INSTALL NEW PIPE AND 90° ELBOW.
15. RAIL SHALL BE SUPPORTED BY 4"DIP WITH FASTENERS AS DETAILED AND RECOMMENDED BY THE PUMP MANUFACTURER.
16. EACH PUMP SHALL HAVE A 1/4"STRAIN RELIEF CABLE ATTACHED TO THE PUMP LIFTING HANDLE AND THE W6X15 USING A U-BOLT. THE POWER CABLE SHALL BE OF SUFFICIENT LENGTH TO PERMIT THE PUMP TO REST IN POSITION, HOWEVER SHORT ENOUGH THAT IT DOES NOT HANG BELOW THE PUMP. THE POWER CABLE SHALL BE FASTENED TO THE STRAIN RELIEF CABLE USING NYLON TIES AT 1'(FOOT)INTERVALS. SEE DETAIL "D" THIS DRAWING FOR CABLE DETAILS.

VIRGINIA POWER
NORTH CAROLINA POWER

POWER ENGINEERING SERVICES
CIVIL ENGINEERING
PROJECT ENGINEERING - FACILITIES

POSSUM POINT POWER STATION
SANITARY SEWAGE PUMP STA./FORCE MAIN
PRINCE WILLIAM COUNTY, VIRGINIA

SHEET TITLE: PUMP STATION DETAILS

SCALE: AS NOTED	DISC: CIVIL	DATE: 05-SEP-2002 SHT22 OF24
DESIGNED BY DWB	ARCHITECT	CAD NO. C:\usr\dgn\9158ABC0183v1
DRAWN BY DWB	DISPL ENGR	DRAWING NO. 9158A-BC-018 REV. 0
CHECKED BY DLK	ENGR SUPV	

REVISION	DESCRIPTION	DATE	DSGN	DRAWN	CHKD
E	REVISED PER COMMENTS	4-1-92	DWB	DWB	DLK
D	SECOND SUBMITTAL COMMENTS	1-24-92	DLK	MGE	DLK
C	REVISED NOTE 11 TO SPEC.FLYGT PUMP ADDED PUMP CURVE	11-27-91	DWB	DWB	DLK
B	REVISED PER COUNTY REVIEW	9-27-91	DWB	DWB	DLK
0	ISSUED FOR CONSTRUCTION	6-15-92	DWB	DWB	DLK

24 X 36 MS=1/8

LV:1,2,3,4,5,63

00010780