RECEIVED

JUL 15 1991

SAFE SECTION

INFORMATION REQUEST NUMBER 17

0714

Site: West Lake LDF
ID #: MOD079900932
Break: 11.6
Other: Laidlaw Waste Systems 7-15-91

INFO REQ 17

0714 4.2

40057635
SUPERFUND RECORDS

OU-01

THE DIVISION OF HEALTH
OF MISSOURI

4

January 23, 1974

Mrs. Catherine Cruse
West Lake Landfill, Inc.
Route 1, Box 206
Bridgeton, Missouri 63042

Dear Mrs. Cruse:

Please find attached a letter to Mr. Robert R. Leavy, P.E., The Elbring Company, Clayton, Missouri, regarding your application for operating permit and the engineering plans, specifications and data submitted to the Division of Health for consideration in the issuance of an operating permit for the West Lake Landfill in Bridgeton, Missouri. The letter to Mr. Leavy shall serve as a report to you stating the reasons for denial of a permit to operate areas 1,2,3, 4 and 5, as shown on the plans as a sanitary landfill.

We believe the letter is self-explanatory. If you or your consultant have any questions, please advise.

By the direction of L. F. Garber, Director, Section of Environmental Health Services.

Sincerely,

Robert M. Robinson, P.E.
Director
Bureau of Solid Waste Management

RMR:pdi

Enclosure

cc: William J. McCullough, Secretary-Treasurer
Vernon Fehr
Robert R. Leavy, P.E.
St. Louis County Health Department

LAI 0125

THE DIVISION OF HEALTH
OF MISSOURI

January 23, 1974

Mr. Robert E. Leavy, P.E.
The Ulbring Company
19 North Meramec
Clayton, Missouri 63105

Dear Mr. Leavy:

The report on engineering plans, specifications, and data for continued operation of the existing landfill and the proposed plan for a new solid waste disposal area at the present West Lake Landfill Site have been reviewed.

The "Application for Operating Permit" to operate a sanitary landfill in areas 1, 2, 3, 4 and 5 is denied. Any resulting fill in these areas to reach the desired final contours shall be cover fill only, or an application for demolition landfill permit with appropriate plans and specifications may be submitted for a demolition landfill in these areas. In accordance with Section 1.7.1 the owner/operator is to submit information to the Division of Health for approval of the method of closing the landfill areas 1, 2, 3, 4 and 5. The denial of a permit to operate a sanitary landfill in areas 1, 2, 3, 4 and 5 is based on the following:

1. Section 2.5.2 C. of the "Missouri Solid Waste Rules and Regulations" has been violated. Failure to alter the unacceptable geologic and hydrologic conditions at this site has resulted in contamination of the groundwater. To continue to allow disposal of solid waste in these areas will increase the impact of contamination of groundwater in this area.

2. Section 2.5.1 has been violated, as indicated by the water sample analyses because the landfill location, design, construction, and operation has not minimized environmental hazards and does not conform to applicable groundwater standards and requirements.

3. The landfill design, construction and operation in these areas has not and does not comply with Sections 2.5.2 and 2.5.3 of the rules and regulations.

The following comments are made regarding the plans and specifications for the "Proposed Landfill Area":

1. After reviewing the boring logs submitted, it appears the "Proposed Landfill Area" can be utilized provided the engineering plans, specifications, and operating procedures are revised to comply with the following criteria:

(a) The lowest point for placement of solid waste over the entire proposed area shall not be below elevation 441. The groundwater elevation is approximately 438 to 440 and it is unsatisfactory to place the solid waste below the groundwater elevation.

(b) A compacted, reworked pad of excavated clay soil is to be placed on the floor of the entire area. The pad shall not be less than 24 inches thick when compacted in place. The landfill is located in fill material which is made up of various soils, rock and refuse and therefore must be reworked to form a seal.

(c) Utilize the area method of sanitary landfilling. This is recommended in order to provide a continuous pad because openings into the groundwater could occur between trenches.

(d) The floor and pad shall be sloped to the northeast from old St. Charles Rock Road. This will permit easier collection of the leachate and direct the leachate away from surface drainage ditches.

(e) Leachate collection facilities shall be provided along the northeast edge of the area. Leachate shall be pumped out of the fill for necessary treatment and disposal when the leachate level reaches one foot above the impermeable pads on the floor of the area. Provision for leachate disposal and long term financing shall be provided.

(f) Groundwater monitoring wells shall be provided around the perimeter of the proposed landfill area on the northwest, southwest and southeast sides. Construction of these wells similar to those in test holes 1, 2, 3, and 4 is satisfactory. One gallon water samples shall be taken from the top foot of groundwater from each well once every three months and analyzed and a report of the analysis submitted to the Division of Health. Any leachate collected shall be sampled and analyzed semi-annually and the analysis submitted to the Division.

2. The cross sections must show existing ground elevation, proposed excavation grade, earth pad, and proposed final grade.

3. The area contour map must show existing contours and proposed final area contours.

4. Additional application forms are enclosed. An application must be completed for each separate area or facility. A separate application must be completed for the sanitary landfill, air curtain destructor, and demolition landfill. In reviewing the rules and regulations, you will note demolition landfills have been separated from sanitary landfills. A sanitary landfill may accept demolition waste but not the reverse. The plans submitted do not indicate any differentiation between a sanitary landfill area and a demolition landfill area.

The continued review and consideration of approval of the "Proposed Landfill Area" is awaiting your response to the above comments and the necessary revisions in the plans. Enclosed for your information and reference in preparing revisions is a copy of the "Missouri Solid Waste Rules and Regulations".

If you have any questions, please advise.

By the direction of L. F. Garber, Director, Section of Environmental Health Services.

Sincerely,

Rick L. Roberts

Rick L. Roberts
Chief
Solid Waste Technical Services

RLR:lf

Enclosures

cc: William J. McCullough, Secretary-Treasurer
Vernon Fehr
Mrs. Catherine Cruse
St. Louis County Health Department

2

THE DIVISION OF HEALTH OF MISSOURI

BROADWAY STATE OFFICE BUILDING
P.O. BOX 570
JEFFERSON CITY, MISSOURI 65101

May 3, 1974

ADDRESS ALL COMMUNICATIONS TO THE DIVISION OF HEALTH

Bill Canney

HERBERT R. DOMKE, M.D., Dr. P.H
DIRECTOR OF
THE DIVISION OF HEALTH

Mr. Robert R. Leavy, P.E. (314)(727-7204)
Rogers and Associates, Inc.
8131 Delmar Blvd.
St. Louis, Missouri 63130

Dear Mr. Leavy:

The revised engineering plans, specifications and operating procedures for the West Lake Landfill, Inc., Sanitary and Demolition Landfills have been reviewed, and the following comments are made for your information and necessary revisions.

1. A list of solid wastes not accepted for disposal shall be posted on a sign at the entrance gate in accordance with Section 2.2.0, Pages 16 and 17 of the Missouri Solid Waste Rules and Regulations.

2. The report does not make provisions for compliance with Sections 2.8.0, 2.9.0, 2.13.0, 3.8.0, 3.9.0 and 3.13.0 of the Missouri Solid Waste Rules and Regulations.

3. No procedures or specifications have been established in the plans and report for constructing the 24-inch thick clay pad. The procedure of pad construction, the in-place tests to confirm impermeability, and the pad advancement ahead of the working face must be established to assure proper pad construction and confirmation of impermeability by testing prior to placement of any solid waste.

4. The report states leachate will be pumped from the sanitary landfill when the depth over the clay pad reaches or exceeds one foot, but no collection facility and observation well has been designed to observe the leachate accumulation and provide for removal by pumping. These facilities must be designed now and installed prior to completing the landfill.

5. The report does not clearly indicate the unloading procedures for the solid waste at the open face. The plans should provide truck access to the toe of the open face. This unloading procedure should be followed in both the sanitary and demolition landfills. Unloading at the top of the open face and spreading down the slope is not considered desirable. Such procedures contribute to increased litter problems and often lead to inadequate spreading and compaction of the solid waste which has been a problem at this landfill in the past.

LAI 0126

THE DIVISION OF HEALTH
OF MISSOURI

6. Final contours have not been provided on the demolition landfill area.

7. No application for operating permit has been received for the "air curtain destructor" burning facility. This is a solid waste processing facility and is required to have a permit. Blank application forms are enclosed.

The continued review and subsequent approval of the plans, specifications and operating procedures for the West Lake Landfill, Inc., Sanitary and Demolition Landfills and Air Curtain Destructor is awaiting receipt of the necessary revisions and additional information in response to the above comments.

Enclosed is a copy of the rules and regulations. Please forward a copy of the engineering plans to the St. Louis County Health Department for their use if they have not been provided a copy by your office.

I will be in St. Louis County on Friday, May 10, 1974 to visit the West Lake Landfill. I plan to be at the landfill at approximately 9:30 a.m. If you would like to meet me there I will be prepared to discuss any questions you might have concerning the above comments.

By the direction of L. F. Garber, Director, Section of Environmental Health.

Sincerely,

Rick L. Roberts
Chief
Solid Waste Technical Services

RLR:pdi

Enclosures

Friday
May 10th - 1974

Rick Roberts, Robinson County (man) visited the landfill area along with several other people. No definite comments made. Also no definite time limit as to the use of present fill - just continue to contour present fill - until new area is ready to go - as of yet new area has not been approved in final stages as further information is necessary before final approval.
(This relates to letter from Rick Roberts (state) to Bob Leavy dated May 3rd

3

M I S S O U R I

DEPARTMENT OF

Natural Resources

Kenneth M. Karch, Director

Division of Environmental Quality

P.O. Box 176 Jefferson City, Missouri 65101 314-751-3241

CHRISTOPHER S. BOND
GOVERNOR

JAMES L. WILSON
DIRECTOR

Landfill Division
Secretary

August 27, 1974

Mr. W. M. McCullough
Secretary-Treasurer
West Lake Landfill, Inc.
Route 1, Box 206
Bridgeton, Missouri 63044

Dear Mr. McCullough:

Please find attached a "Report of Approval of Plans and Specifications for Solid Waste Disposal Area, St. Louis County, Missouri," which I believe is self-explanatory. Please consider this report of approval as an authorization to operate until a permit to operate is issued by the Department of Natural Resources. Due to the reorganization of state government on July 1, 1974, we have not developed and printed the official permits at this time.

If you have any questions concerning the report or your authorization to operate, please advise.

Sincerely,

Robert M. Robinson

Robert M. Robinson, P.E.
Director
Bureau of Solid Waste Management

RMR:RLR:pdi

Attachment

cc: Rogers and Associates, Inc.
St. Louis County Health Department
East-West Gateway Coordinating Council
District Health Unit No. 7

LAI 0128

REPORT OF APPROVAL OF PLANS AND SPECIFICATIONS
FOR SOLID WASTE DISPOSAL AREAS
ST. LOUIS COUNTY, MISSOURI

August 27, 1974

INTRODUCTION

An application for operating permit has been filed requesting a permit to operate a sanitary landfill designated in the application as the West Lake Landfill, Inc. The application was filed by West Lake Landfill, Inc., and signed by W. M. McCullough, Secretary-Treasurer. Plans, specifications and operating procedures for the sanitary landfill have been submitted to the Bureau of Solid Waste Management for review and approval by Rogers and Associates, Inc., Consulting Engineers, St. Louis, Missouri. These plans, specifications and operating procedures have been reviewed for compliance with the Missouri Solid Waste Management Law of 1972 (Section 260.200 to 260.245 RSMo., Supplement 1973) and the Missouri Solid Waste Rules and Regulations.

BRIEF DESCRIPTION

The proposed sanitary landfill site is a 25 acre portion of a 212 acre tract of land in U.S. Survey 47, 131 and 193 and parts of Townships 46 and 47 N., Range 5 E., St. Louis County, Missouri. The limits of the proposed sanitary landfill are shown on Plate # 2-1 of the engineering plans and specifications. Due to the geologic setting of the proposed sanitary landfill site and the presence of groundwater at relatively shallow depths below the proposed landfill excavation elevation, a two-foot compacted layer of impermeable clay is being required, and the excavation elevation has been limited to elevation 439. The pad will be placed over the entire landfill area at the location shown on Plate # 3-1, and at the elevation shown on Plate 8-2. The pad is to be constructed well in advance of the working face and shall be continuous, homogeneous and well compacted to assure no openings or crevices to allow leachate to flow to the groundwater below. The clay pad shall be spread evenly in six to eight inch layers, rolled with a sheeps' foot roller and at completion, in-place permeability tests shall be made. Minimum acceptable results are 10^{-7} centimeters per second. Placement of solid waste on the pad shall not be made until pad construction has met the above specifications.

A leachate collection well shall be constructed to collect any leachate accumulating on top of the impermeable clay pad. Six groundwater monitoring wells are to be constructed as shown on the engineering plans around the perimeter of the sanitary landfill to monitor groundwater quality.

BRIEF DESCRIPTION CONTINUED

The type of solid waste to be accepted for disposal consists of municipal solid waste. No hazardous waste, bulk liquids, semi-solids, sludges containing free moisture, highly flamable or volatile substances, unexpended pesticide containers, pesticides, raw animal manure, septic tank pumpings, raw sewage sludge, industrial process sludge, radioactive material and explosives shall be accepted. No open burning shall be permitted.

The area method of sanitary landfill operation will be utilized to raise the proposed landfill area to an elevation of approximately 470. All fencing, gates, equipment maintenance buildings, operating equipment, all-weather access roads, surface water control devices, leachate collection and treatment devices, and other necessary appurtenances shall be provided and maintained as per the approved plans, specifications and operating procedures.

RECOMMENDATIONS

1. Plate # 11-0 shows the groundwater monitoring wells extending to elevation 439. The groundwater monitoring wells shall be constructed as indicated in the drawing but shall be extended a minimum of 24 inches below the elevation at which groundwater is encountered.

2. The surface water drainage ditch shown on the cross-sections on Plate # 8-2 along the eastern edge of the proposed sanitary landfill shall be located approximately 25 feet further east so that the flow line of the ditch is located on natural ground rather than over the landfill.

APPROVAL

The plans, specifications and operating procedures described above have been examined as to sanitary features of design which might affect the operation of the solid waste disposal area as a sanitary landfill. Approval of the plans, specifications and operating procedures as revised is hereby given. This approval is given with the explicit understanding that the sanitary landfill will be developed and operated in compliance with the plans, specifications and operating procedures submitted to the Bureau of Solid Waste Management, the recommendations listed in this report, and the Missouri Solid Waste Rules and Regulations. This approval is not to be construed as compliance with any existing local ordinances or zoning requirements. The Bureau of Solid Waste Management reserves the right to withdraw the approval of these plans, specifications and operating procedures at any time that it is found that additional construction or alteration of the sanitary landfill is necessary to assure compliance with the rules and regulations and to afford adequate protection of the public health.

Rick L. Roberts

Rick L. Roberts, Chief
Solid Waste Technical Services

RLR:pdi

4

M I S S O U R I
CHRISTOPHER S. BOND
GOVERNOR

DEPARTMENT OF
Natural Resources
JAMES L. WILSON
DIRECTOR

Kenneth M. Karch, Director
Division of Environmental Quality

P.O. Box 176 Jefferson City, Missouri 65101 314-751-3241

October 10, 1974

W. J. McCullough
Secretary Treasurer
West Lake Landfill, Inc.
Route 1, Box 206
Bridgeton, Missouri 63042

Dear Mr. McCullough:

Enclosed is a Report of Approval of Plans and Specifications for the West Lake Landfill Inc. Demolition Landfill, St. Louis County, Missouri, which I believe is self-explanatory.

Due to state reorganization official operating permits have not been developed to date. You may continue operation of the demolition landfill upon receipt of this report of approval. An official operating permit will be issued when developed providing the demolition landfill is operating in accordance with the approved engineering plans and specifications and the Missouri Solid Waste Rules and Regulations.

The "Application for Operating Permit" for the air curtain destructor has been received. Prior to approving the application, the following information is needed regarding the operating procedures:

1. Location of the facility on the site.

2. The hours of daily operation.

3. The procedures for starting the facility.

4. Procedures for cleaning out the residue.

5. The disposal procedures for the residue.

6. The charging procedures and equipment for feeding the facility.

LAI 0129

Our continued review of the "Application for Operating Permit" for the air curtain destructor is awaiting receipt of the above information.

If you have any questions, please advise.

Sincerely,

Robert M. Robinson, P.E.
Director
Solid Waste Management Program

RMR:RLR:lf

Enclosure

cc: Rogers and Associates, Inc.
St. Louis County Health Department
St. Louis Regional Office

REPORT OF APPROVAL OF PLANS AND SPECIFICATIONS
FOR SOLID WASTE DISPOSAL AREA
ST. LOUIS COUNTY, MISSOURI

October 10, 1974

INTRODUCTION

An "Application for Operating Permit" has been filed with the Missouri Department of Natural Resources requesting a permit to operate a demolition landfill designated in the application as the West Lake Landfill Inc. Demolition Landfill. The application was filed by West Lake Landfill, Inc., W. J. McCullough, Secretary-Treasurer. Plans, specifications, and operating procedures for the demolition landfill have been submitted to the Department of Natural Resources, Solid Waste Management Program, for review and approval by Rogers and Associates, Inc., St. Louis, Missouri. These plans, specifications, and operating procedures have been reviewed for compliance with the Missouri Solid Waste Management Law of 1972 and the Missouri Solid Waste Rules and Regulations, Section III, Demolition Landfills.

BRIEF DESCRIPTION

The proposed demolition landfill shall be located on the same tract of land as the West Lake Landfill, Inc. Sanitary Landfill. It shall be specifically located in the area designated in the plans as Areas 1, 3, 5 and 6 (see plate no. 3-1). The demolition landfill will be utilized in these areas to bring the elevation of these areas to the proposed final contours. The type of waste to be accepted for disposal in the demolition landfill shall be demolition and construction waste, brush and untreated wood waste, inert plastics, soil, rock, concrete, and noncombustible inert solids insoluble in water. The materials shall contain only a minimal amount of metal. All other solid waste shall be disposed of in the sanitary landfill.

The operation shall be in accordance with Section III, Demolition Landfills, of the Missouri Solid Waste Rules and Regulations except that the plans do call for daily cover of the area. When the areas have been brought to final contour, it shall be sealed off with two feet of compacted clay and the area seeded. At that time the demolition landfill waste will be disposed of in the sanitary landfill along with the other solid waste accepted. All fencing, gates, equipment maintenance buildings, employees' buildings, all-weather access roads, surface water control devices, operating equipment, and other necessary appurtenances shall be provided in accordance with the approved plans, specifications, and operating procedures and shall serve both the West Lake Landfill Inc. Demolition and Sanitary Landfills.

APPROVAL

The plans, specifications, and operating procedures described above have been examined as to sanitary features of design which might affect the operation of the solid waste disposal area as a demolition landfill. Approval of the engineering plans, specifications, and operating procedures is hereby given. This approval is given with the explicit understanding that the demolition landfill will be developed and operated in compliance with the plans, specifications, and operating procedures submitted to the Department of Natural Resources, with the Missouri Solid Waste Rules and Regulations, Section III, and with the Missouri Solid Waste Management Law of 1972. The Department of Natural Resources reserves the right to withdraw the approval of these engineering plans, specifications, and operating procedures at any time that it is found that additional construction or alteration of the demolition landfill is necessary to assure compliance with the rules and regulations and to afford adequate protection of the public health.

Rick L. Roberts

Rick L. Roberts
Chief, Solid Waste Technical Services

Solid Waste
Waste Landfill
Important

2

JAN 29 1976

January 27, 1976

Mr. W. J. McCullough
Secretary Treasurer
West Lake Landfill, Inc.
Route 1, Box 206
Bridgeton, Missouri 63044

Dear Mr. McCullough:

Enclosed are your official solid waste disposal area operating permits, which I believe are self-explanatory. Also enclosed are copies of each of the "Report of Approval of Plans and Specifications for Solid Waste Disposal Area, St. Louis County, Missouri," dated August 27, 1974 and October 10, 1974, which are made a part of the description and conditions of these permits.

If you have any questions, please advise.

Sincerely,

Robert M. Robinson, P.E.
Director
Solid Waste Management Program

RMR:pdi

Enclosures

cc: St. Louis Regional Office
East-West Gateway Coordinating Council
Rogers and Associates, Inc.

LAI 0130

MISSOURI DEPARTMENT OF NATURAL RESOURCES
Division of Environmental Quality
Solid Waste Management Program

SOLID WASTE DISPOSAL AREA OPERATING PERMIT

In accordance with Section 260.205, Paragraph 2, RSMo, Supplement 1973, the Missouri Department of Natural Resources hereby approves the application and issues Permit Number 118903 to West Lake Landfill, Inc. for the operation of a solid waste disposal area set forth in the application as the West Lake Landfill, Inc. Sanitary Landfill located in ~~XXX~~ U.S. Surveys 47, 131, and 1934, Township 46 & 47 N., Range 5 E. St. Louis County, Missouri. This permit applies only to that tract of land of approximately 25 acres covered by the engineering plans, specifications and operating procedures submitted to the Department.

Operation of this solid waste disposal area shall be in accordance with the provisions of the Missouri Solid Waste Management Law (Sections 260.200 to 260.245, RSMo, Supplement 1973), the rules and regulations promulgated thereunder, and the engineering plans, specifications and operating procedures approved by the Department. The Department does not examine structural features of design or efficiency of mechanical equipment and the issuance of this permit does not imply approval of those features.

The Department reserves the right to revoke or modify this permit after due notice if it is found that the holder of the permit is in violation of the Missouri Solid Waste Management Law, the Missouri Solid Waste Rules and Regulations, or failure to operate in accordance with the approved plans, specifications and operating procedures or is creating a public nuisance, health hazard or environmental pollution. Furthermore, if it is found that additional construction or alteration of the solid waste disposal area is necessary to comply with any and all rules and regulations promulgated in accordance with the Missouri Solid Waste Management Law, then, and in that event, the Department has and does hereby reserve the right to revoke or modify this permit.

This permit for operation of a solid waste disposal area is issued only to the person named in the application and shall not be transferable. This permit shall become void after notice to the Department by the person named in the permit that said person has discontinued operation of the disposal area. The Department may revoke this permit after determining an area has not operated for a period of one year. This permit is issued contingent upon and may be revoked for failure to comply with any and all conditions described on the attached "Report of Approval of Plans and Specifications for Solid Waste Disposal Area".

By James L. Wilson
DIRECTOR, DEPARTMENT OF NATURAL RESOURCES

Date January 27, 1976

2

REPORT OF APPROVAL OF PLANS AND SPECIFICATIONS
FOR SOLID WASTE DISPOSAL AREAS
ST. LOUIS COUNTY, MISSOURI

August 27, 1974

INTRODUCTION

An application for operating permit has been filed requesting a permit to operate a sanitary landfill designated in the application as the West Lake Landfill, Inc. The application was filed by West Lake Landfill, Inc., and signed by W. M. McCullough, Secretary-Treasurer. Plans, specifications and operating procedures for the sanitary landfill have been submitted to the Bureau of Solid Waste Management for review and approval by Rogers and Associates, Inc., Consulting Engineers, St. Louis, Missouri. These plans, specifications and operating procedures have been reviewed for compliance with the Missouri Solid Waste Management Law of 1972 (Section 260.200 to 260.245 RSMo., Supplement 1973) and the Missouri Solid Waste Rules and Regulations.

BRIEF DESCRIPTION

The proposed sanitary landfill site is a 25 acre portion of a 212 acre tract of land in U.S. Survey 47, 131 and 193 and parts of Townships 46 and 47 N., Range 5 E., St. Louis County, Missouri. The limits of the proposed sanitary landfill are shown on Plate # 2-1 of the engineering plans and specifications. Due to the geologic setting of the proposed sanitary landfill site and the presence of groundwater at relatively shallow depths below the proposed landfill excavation elevation, a two-foot compacted layer of impermeable clay is being required, and the excavation elevation has been limited to elevation 439. The pad will be placed over the entire landfill area at the location shown on Plate # 3-1, and at the elevation shown on Plate 8-2. The pad is to be constructed well in advance of the working face and shall be continuous, homogeneous and well compacted to assure no openings or crevices to allow leachate to flow to the groundwater below. The clay pad shall be spread evenly in six to eight inch layers, rolled with a sheeps' foot roller and at completion, in-place permeability tests shall be made. Minimum acceptable results are 10^{-7} centimeters per second. Placement of solid waste on the pad shall not be made until pad construction has met the above specifications.

A leachate collection well shall be constructed to collect any leachate accumulating on top of the impermeable clay pad. Six groundwater monitoring wells are to be constructed as shown on the engineering plans around the perimeter of the sanitary landfill to monitor groundwater quality.

LAI 0131

BRIEF DESCRIPTION CONTINUED

The type of solid waste to be accepted for disposal consists of municipal solid waste. No hazardous waste, bulk liquids, semi-solids, sludges containing free moisture, highly flamable or volatile substances, unexpended pesticide containers, pesticides, raw animal manure, septic tank pumpings, raw sewage sludge, industrial process sludge, radioactive material and explosives shall be accepted. No open burning shall be permitted.

The area method of sanitary landfill operation will be utilized to raise the proposed landfill area to an elevation of approximately 470. All fencing, gates, equipment maintenance buildings, operating equipment, all-weather access roads, surface water control devices, leachate collection and treatment devices, and other necessary appurtenances shall be provided and maintained as per the approved plans, specifications and operating procedures.

RECOMMENDATIONS

1. Plate # 11-0 shows the groundwater monitoring wells extending to elevation 439. The groundwater monitoring wells shall be constructed as indicated in the drawing but shall be extended a minimum of 24 inches below the elevation at which groundwater is encountered.

2. The surface water drainage ditch shown on the cross-sections on Plate # 8-2 along the eastern edge of the proposed sanitary landfill shall be located approximately 25 feet further east so that the flow line of the ditch is located on natural ground rather than over the landfill.

APPROVAL

The plans, specifications and operating procedures described above have been examined as to sanitary features of design which might affect the operation of the solid waste disposal area as a sanitary landfill. Approval of the plans, specifications and operating procedures as revised is hereby given. This approval is given with the explicit understanding that the sanitary landfill will be developed and operated in compliance with the plans, specifications and operating procedures submitted to the Bureau of Solid Waste Management, the recommendations listed in this report, and the Missouri Solid Waste Rules and Regulations. This approval is not to be construed as compliance with any existing local ordinances or zoning requirements. The Bureau of Solid Waste Management reserves the right to withdraw the approval of these plans, specifications and operating procedures at any time that it is found that additional construction or alteration of the sanitary landfill is necessary to assure compliance with the rules and regulations and to afford adequate protection of the public health.

R.L.R.

Rick L. Roberts, Chief
Solid Waste Technical Services

RLR:pdi

MISSOURI DEPARTMENT OF NATURAL RESOURCES
Division of Environmental Quality
Solid Waste Management Program

SOLID WASTE DISPOSAL AREA OPERATING PERMIT

In accordance with Section 260.205, Paragraph 2, RSMo, Supplement 1973, the Missouri Department of Natural Resources hereby approves the application and issues Permit Number 218903 *to* West Lake Landfill, Inc. *for the operation of a solid waste disposal area set forth in the application as the* West Lake Landfill, Inc. Demolition Landfill *located in* ~~xxx~~ U.S. Surveys 47, 131, and 1934, *Township* 46 & 47 N., *Range* 5 E. St. Louis County *County, Missouri. This permit applies only to that tract of land of approximately* 27 *acres covered by the engineering plans, specifications and operating procedures submitted to the Department.*

Operation of this solid waste disposal area shall be in accordance with the provisions of the Missouri Solid Waste Management Law (Sections 260.200 to 260.245, RSMo, Supplement 1973), the rules and regulations promulgated thereunder, and the engineering plans, specifications and operating procedures approved by the Department. The Department does not examine structural features of design or efficiency of mechanical equipment and the issuance of this permit does not imply approval of these features.

The Department reserves the right to revoke or modify this permit after due notice if it is found that the holder of the permit is in violation of the Missouri Solid Waste Management Law, the Missouri Solid Waste Rules and Regulations, or failure to operate in accordance with the approved plans, specifications and operating procedures or is creating a public nuisance, health hazard or environmental pollution. Furthermore, if it is found that additional construction or alteration of the solid waste disposal area is necessary to comply with any and all rules and regulations promulgated in accordance with the Missouri Solid Waste Management Law, then, and in that event, the Department has and does hereby reserve the right to revoke or modify this permit.

This permit for operation of a solid waste disposal area is issued only to the person named in the application and shall not be transferable. This permit shall become void after notice to the Department by the person named in the permit that said person has discontinued operation of the disposal area. The Department may revoke this permit after determining an area has not operated for a period of one year. This permit is issued contingent upon and may be revoked for failure to comply with any and all conditions described on the attached "Report of Approval of Plans and Specifications for Solid Waste Disposal Area".

By James Wilson
DIRECTOR DEPARTMENT OF NATURAL RESOURCES

Date January 27, 1976

LAI 0132

2

REPORT OF APPROVAL OF PLANS AND SPECIFICATIONS
FOR SOLID WASTE DISPOSAL AREA
ST. LOUIS COUNTY, MISSOURI

October 10, 1974

INTRODUCTION

An "Application for Operating Permit" has been filed with the Missouri Department of Natural Resources requesting a permit to operate a demolition landfill designated in the application as the West Lake Landfill Inc. Demolition Landfill. The application was filed by West Lake Landfill, Inc., N. J. McCullough, Secretary-Treasurer. Plans, specifications, and operating procedures for the demolition landfill have been submitted to the Department of Natural Resources, Solid Waste Management Program, for review and approval by Rogers and Associates, Inc., St. Louis, Missouri. These plans, specifications, and operating procedures have been reviewed for compliance with the Missouri Solid Waste Management Law of 1972 and the Missouri Solid Waste Rules and Regulations, Section III, Demolition Landfills.

BRIEF DESCRIPTION

The proposed demolition landfill shall be located on the same tract of land as the West Lake Landfill, Inc. Sanitary Landfill. It shall be specifically located in the area designated in the plans as Areas 1, 3, 5 and 6 (see plate no. 3-1). The demolition landfill will be utilized in these areas to bring the elevation of these areas to the proposed final contours. The type of waste to be accepted for disposal in the demolition landfill shall be demolition and construction wastes, brush and untreated wood waste, inert plastics, soil, rock, concrete, and noncombustible inert solids insoluble in water. The materials shall contain only a minimal amount of metal. All other solid waste shall be disposed of in the sanitary landfill.

The operation shall be in accordance with Section III, Demolition Landfills, of the Missouri Solid Waste Rules and Regulations except that the plans do call for daily cover of the area. When the areas have been brought to final contour, it shall be sealed off with two feet of compacted clay and the area seeded. At that time the demolition landfill waste will be disposed of in the sanitary landfill along with the other solid waste accepted. All fencing, gates, equipment maintenance buildings, employees' buildings, all-weather access roads, surface water control devices, operating equipment, and other necessary appurtenances shall be provided in accordance with the approved plans, specifications, and operating procedures and shall serve both the West Lake Landfill Inc. Demolition and Sanitary Landfills.

LAI 0133

APPROVAL

The plans, specifications, and operating procedures described above have been examined as to sanitary features of design which might affect the operation of the solid waste disposal area as a demolition landfill. Approval of the engineering plans, specifications, and operating procedures is hereby given. This approval is given with the explicit understanding that the demolition landfill will be developed and operated in compliance with the plans, specifications, and operating procedures submitted to the Department of Natural Resources, with the Missouri Solid Waste Rules and Regulations, Section III, and with the Missouri Solid Waste Management Law of 1972. The Department of Natural Resources reserves the right to withdraw the approval of these engineering plans, specifications, and operating procedures at any time that it is found that additional construction or alteration of the demolition landfill is necessary to assure compliance with the rules and regulations and to afford adequate protection of the public health.

R. L. R.

Rick L. Roberts
Chief, Solid Waste Technical Services

PAUL H. HIMEBAUGH
CONSULTING ENGINEER
9929 MANCHESTER ROAD
WARSON WOODS, MO. 63122

August 29, 1977

West Lake Landfill, Inc.
Route 1, Box 206
Bridgeton, Missouri 63042

Attn: Mr. William J. McCullough
Secretary - Treasurer

Gentlemen:

RE: Request for Permit for
Expansion of Landfill Operations
West Lake Landfill, Inc.
St. Louis County, Missouri

The following report has been prepared for your use in making application to Missouri Department of Natural Resources Division of Environmental Quality for permit to operate a sanitary landfill on a portion of the West Lake Quarry property.

The proposed site is located on the same property as the present landfill, but is a new and separate area from the existing operation.

The report sets out design concepts, operational requirements, and construction techniques for the new landfill area which must be followed to produce minimal impact upon the environment. If these procedures are followed, it is my opinion that you will protect public health, prevent nuisances, and meet applicable standards established by the Missouri Solid Waste Management Law of 1972 and the Missouri Solid Waste Rules and Regulations.

Very truly yours,

Paul H. Himebaugh

Paul H. Himebaugh PE
Missouri Registration No. E-6180

STATE OF MISSOURI
PAUL H.
HIMEBAUGH
NUMBER
E-6180
REGISTERED PROFESSIONAL ENGINEER

LAI 0134

ENGINEERING REPORT
for
PROPOSED EXPANSION
of
WEST LAKE LANDFILL

INTRODUCTION

The present landfill areas at West Lake Landfill, Inc. are approaching completion, and it is desired to extend or relocate operations into the quarry pit adjacent to St. Charles Rock Road at Taussig Road. Personnel and equipment of the present operation will be used, and present customers can be accomodated in the new area.

This report deals with specific conditions in the new area, and sets out all requirements which may be needed for protection of environmental quality. Procedures are outlined in sequential steps so that only essential work need be undertaken if it is found that the full treatment is not necessary. Each increment of the work is designed so that it may be self-sufficient and appropriate as a base for further steps without need for removal and replacement. It is hoped that this concept will unquestionably protect public health, but will accomplish the desired result at minimum expense to the consumer.

Primary areas of concern are drainage, infiltration, and leachate generation, collection, treatment and disposal. This statement should not be interpreted as indicating any lack of concern for other features, but they seem to present no significant problems.

ENGINEERING REPORT
for
PROPOSED EXPANSION
of
WEST LAKE LANDFILL

Table of Contents

SITE LOCATION	1
TERRAIN AND FLOOD PROBABILITY	2
GEOLOGY	3
HAUL ROAD CONSTRUCTION	4
IMPERVIOUS LINER	5
LEACHATE COLLECTOR	6
LEACHATE WET WELL	6
LEACHATE PUMP	7
LEACHATE PUMPHOUSE	7
LEACHATE DISPOSAL AND TREATMENT	8
LANDFILL CONSTRUCTION	10
SURFACE WATER MANAGEMENT	12
OPERATION	12
VECTOR CONTROL	13
GAS CONTROL	13
BEAUTIFICATION	13
DUST CONTROL	14
LITTER CONTROL	14
SAFETY	14

PLATE 1 LOCATION & AREA MAPS with FINAL CONTOURS

PLATE 2 MISCELLANEOUS DETAILS and EXISTING CONTOURS

PLATE 3 LEACHATE WELL DETAILS & PROPOSED CONTOURS

PLATE 4 CROSS SECTIONS

PLATE 5 CROSS SECTIONS

SITE LOCATION

The area proposed for extension of sanitary landfill operations is located in a portion of the West Lake Quarry in U.S. Survey 131 near the intersection of Mo. Highway 115 (St. Charles Rock Road) and Taussig Road in north-central St. Louis County, within the city limits of Bridgeton.

The area covers thirteen acres in a portion of the quarry where mining operations are nearly complete. The specific tract is rectangular, measuring approximately 600 feet by 1200 feet, located west of the intersection of St. Charles Rock Road and Taussig Road. The location and shape of the new area can be seen on the Location and Area Maps on Plate 1.

The quarry is located within the corporate limits of the City of Bridgeton, and is subject to the zoning ordinance of that City. The quarry site itself is zoned M-1, and some adjacent property is zoned M-2. The western part of the quarry property is zoned R-1, and there is some R-3 zoning slightly more than one quarter mile to the east. There is only one occupied residence in the neighborhood, and it is located at the southern corner of the intersection of St. Charles and Taussig Roads.

Primary access to the landfill site is from St. Charles Rock Road, which is a four-lane concrete highway. Alternate access can be obtained from Old St. Charles Rock Road at the southern boundary of the quarry.

West Lake Landfill has been operating since 1953 as a separate but inter-related activity of the West Lake Quarry and Material Company. The entire property, whether used for quarry or landfill operations, is either owned or controlled by long-term leases by several parties, individual and corporate, but all owners are inter-related as principals in the quarry and landfill operations.

At the present time there are no specific plans for the type of land use to be expected on the reclaimed land, but obviously the completed landfill will present a better appearance than an abandoned quarry.

TERRAIN AND FLOOD PROBABILITY

The quarry and landfill site is on the limestone bluff about two miles east of the Missouri River at the edge of the flood plain. The Kansas City District of the Corps of Engineers is restudying Missouri River profiles and does not have a precise estimate of 100-year design flood elevation at this time, but they advise that the profile is in the range of 451 to 454 just below the I-70 bridge. The intersection of the landfill and quarry entrance road with St. Charles Rock Road is at elevation 452, which is the lowest point on the site except for the pits. The lowest point on the pit perimeter is elevation 454.5 near the crusher, so there is protection against direct flood by the Missouri River.

GEOLOGY

During July of 1973 numerous borings were made over the entire property in regard to characteristics of overburden, and these borings were discussed in an Engineering Report of March 1974 by Rogers and Associates. That discussion concluded that groundwater and/or leachates from the present landfill flows westward to the Missouri River. Of the 1973 borings, only 1 to 3 and 25 & 26 are of interest in regard to the new area, and those boring logs are shown on Plate 2.

The existing quarry in solid Kimmswick limestone gives an opportunity to inspect the formation. It is dense and there is little indication of seepage. Last January when the weather was very cold, examination of the exposed faces showed very little ice, indicating a lack of moisture penetration. The proposed expansion area is adjacent to the existing deep pit and a wall 40 feet thick has been left in place to retain the landfill and leachates (if any). There was a crack in this wall, resulting from quarrying operations, which has been grouted to maintain the impermeability of the wall.

The strike of the formation is generally north, with a dip of about 1%. When rock removal is complete, the low point in the expansion area will be about elevation 310 where the pit is closest to Taussig and St. Charles Rock Roads.

Visual examination can not precisely determine the elevation of previous landfill areas along the northwest side of the new area, but it appears that the present ground line above elevation 450 may be previous landfill.

HAUL ROAD CONSTRUCTION

There is an existing haul road into the pit which rock trucks use to remove the rock, but this road is not entirely suitable for use by trash trucks. First, the access or haul road for trash trucks will be relocated away from concrete and quarry operations as shown on Plates 1 and 2. Alignment of the haul road will provide at lease 200' sight distance. The road will be at least 26' wide, with widening on sharp curves to 30'. A small vee ditch on each side on the road should handle drainage because of the heavy grade.

Maximum grade will be limited to 10%, which should be adequate since the trash trucks will not be loaded while making the ascent. The haul road will be cut in solid rock in some cases, but when necessary to construct over earth or previous landfill, it will be constructed with 12" waterbound macadam. It is believed that the haul road alignment shown on Plate 2 will be in dirt or rock, in which case back slopes may be 1 1/2:1. If it is found that the back slope is in previous landfill, the slope must be laid back on a 3:1 and final cover replaced. As an alternate, the landfill may be removed for a sufficient width to permit construction of an earth dike.

The minimum radius for the haul road will be 75' at the inside edge of the roadway. Where the haul road is adjacent to a vertical face, a protective berm 6' wide and 2' high should be constructed between the road and the vertical face.

To eliminate need for culverts under the haul road, there will be no grade reversals, and none seem necessary. All rainfall within the pit boundaries will follow the haul road ditches to the bottom of the pit, where it may cause a problem. Possibly 25% of the drainage could be trapped in a sump at elevation 390, then pumped out of the pit, but it will probably be better to use the leachate well to remove rainfall.

IMPERVIOUS LINER

Although the limestone appears dense and generally impervious, a protective clay liner will be provided. The entire pit floor will be covered with a 24" layer of compacted clay.

Vertical rock faces will also be lined with compacted clay. Although a three foot thickness would be satisfactory, there does not seem to be a practical method of placing it. First, the clay must be compacted, and it appears that at least 8' is required for the operation of trucks, blade, and roller. Tentatively, it is suggested that clay be delivered by truck and the clay bladed to a 6" depth. Operation of rubber-tired equipment (trucks) should then produce satisfactory compaction. After placement of the 8' thick wall, about 6' high, it may be possible to remove some of the clay and use it for daily cover in the landfill. An

alternate method could be a small tractor with blade and roller that might produce satisfactory results with a width of less than 8'.

It is anticipated that the leachate well will be used to keep the fluid level below elevation 350. The rock wall near the southern end of the new area is at elevation 363, and there is a clay berm to elevation 370. There is no need for the impervious liner to extend above elevation 400 because the leachate will break out at elevation 370 if unattended.

Therefore, the quantity of impervious liner has been estimated with vertical walls 8' thick from the bottom of pit to elevation 400. 61,000 cubic yards of clay will be required in accordance with the above criteria. Use of the alternate smaller tractor might reduce the volume of material, but not the cost.

LEACHATE COLLECTOR

As shown on Plate 3, 250 linear feet of underdrain will be used to collect leachate from the bottom of the pit. Underdrain material will be non-corrosive and the use of 4" perforated PVC underdrain is recommended. Underdrains will be bedded in granular filter material and the ends will be sealed.

LEACHATE WET WELL

Other leachate observation wells at the existing landfill have not shown the generation or collection of leachates. When the new area is completed and sealed, it is hoped that there will be no significant amount of leachates, but because of the drainage situation in the

pit there will be a need for pumping during construction if not after completion. As refuse placement progresses, sections of 42" RCP will be installed with 4" steel pipe well casing. A temporary cover should be kept over the open shaft. If pumping becomes necessary, the leachate pump can be installed temporarily and operated with temporary power.

LEACHATE PUMP

The volume of leachate to be pumped is unknown, but there is a relatively constant head requirement if the leachate is to be raised to the disposal area at elevation 470. Because leachate is suspected of corrosive potential, use of a stainless submersible pump is recommended. Impellers to be lexan or other non-corrosive material. One possible pump is Jacuzzi Model 1S4M-16 stage, which should deliver 600 gallons per hour. This pump may be obtained for either 110 volt or 230 volt power. If used temporarily, the power selection may be dependent on the size of portable power plants which may be available in the quarry.

Pump should be 4" with 1 1/2" steel drop pipe. Permanent installation will require about 180' of drop pipe and cable.

LEACHATE PUMPHOUSE

At this time it is not known if a permanent pump installation will be needed, but if it is, the pumphouse layout is shown on Plate 3. The pumphouse should be a light, pre-fabricated metal building with removable roof. Provision must be made for relative movement

between the top of the wet well and the ground surface of the landfill. A hose or flexible tube will be required between the wet well and the line to the disposal area, and the pump controls should be attached to the wet well instead of the pumphouse. Pumphouse should have insulation and provision for heating to avoid freezing the piping. Total movement of 20' or more must be anticipated eventually since the landfill is 175' deep at this point. The pumphouse may need to be reset, or perhaps the top sections of the wet well will need to be removed in time.

1 1/2" PVC pipe with SDR of 26 is recommended for the line to the disposal area. Because of movement in the fill, flexibility is needed, and the PVC should not be harmed by the leachate.

LEACHATE DISPOSAL AND TREATMENT

Tentative method of disposing of leachate is to irrigate the previous landfill area southwesterly of the new area. When pumping temporarily during construction, perhaps a small fire hose will suffice, depending on the volume of fluid to be pumped. Evaporation and transpiration may adequately dissapate the moisture. If the volume of liquid is too great to be handled by a temporary fire hose, six or eight lawn sprinklers may be installed as shown on Plate 3.

If irrigation with leachate after completion of the landfill proves to be detrimental to vegetation, or is noxious, a small lagoon will be built where the leachate may be evaporated, settled, or aerated.

Possibly a second, or larger lagoon will be required or desired to achieve a proper level of treatment. A small pump will be required to irrigate with the effluent when it is of satisfactory quality.

The foregoing discussion of possible handling of the leachate problem is an example of the sequential increments mentioned in the introduction to this report. Items which can not be reached for modification, such as the collector underdrains, are installed for possible use, if and as needed. Construction of the lagoon(s) is deferred until there is more experience with the specific problem at this site.

Lagoon details shown may need modification if the leachate is to be aerated. A working water depth of 2' was assumed, which may need to be increased, and possibly a sump will be required. Typical details, such as 3:1 slopes and 20 mil PVC liner with 12" of protective cover, should be applicable for whatever configuration is needed.

LANDFILL CONSTRUCTION

After preparation of the pit floor by installation of the impervious liner, including the vertical walls 6' high, landfill construction will start at the northeast end of the pit, next to St. Charles Rock Road. The southwest end should also be prepared for use in wet weather. Because the haul road is all-weather, there should be no difficulty in getting trucks in and out of the pit, but it would be desirable to minimize travel on the pit floor in wet weather.

Trucks will dump near the working face, and refuse will be bladed into the cell in lifts of 2 or 3 feet. The tractor will make several passes over the lift to obtain compaction. Daily cover will be hauled as needed, or it is advisable to haul a stock pile of cover material that will supply cover requirements for a week, and keep it near the working face.

As each lift of cells is completed, the process will be repeated, starting with construction of the vertical liner on rock faces and continuation of the 24" pad over the haul road that will be covered.

The cross sections show total volume in the landfill of 1,245,000 cubic yards. Final cover will require 42,000 cubic yards, and the impervious liner 61,000, leaving a net volume of 1,142,000 cubic yards for the mixture of refuse and daily cover.

Daily cover requires about 16% of the total refuse volume, which is 183,000 cubic yards for the calculated volumes. For daily cover, final cover, and impervious liner, a total of 286,000 cubic yards must be borrowed. There is an ample quantity available from the borrow area south of Old St. Charles Rock Road, which contains an excess of 100 acres owned by the company.

As the landfill approaches completion, the surface should be shaped to the contours shown on Plate 3. The maximum slope is 3:1, and the minimum slope on relatively flat areas is 2%. Ditches have been designed with a minimum slope of 3% in an effort to avoid potential ponding and infiltration if there should be excess settlement at any point.

Ditches across the landfill are to be riprapped. Riprap is a flexible form of paving that will adjust to minor settlement without undercutting. Flat ditches (3%) may be riprapped with 6" stone, but the steep ditch down the 3:1 slope must be riprapped with 12". Details shown on Plate 3 should be workable for dumped riprap with a minimum of hand work.

When any area is brought to final grade and final cover is applied, it will immediately be seeded. This is especially critical on the 3:1 slope which will wash into the quarry sump.

SURFACE WATER MANAGEMENT

During construction there are some unavoidable drainage problems which can be solved only by use of the leachate pump. However, when construction is completed and there is a good stand of grass to control erosion, drainage into the quarry should be essentially the same as it has been. Rain which falls into the quarry pit of the new landfill area will be diverted to some extent to St. Charles Rock Road. Approximately 85% of the rainfall will run over the slope and/or ditch at the wall. With good vegetation on the slope, the water should be slowed and sheet flow should occur. The ditch accumulates from the upper portion of the 12 Acre drainage area, and because of the high slope will deliver water to the quarry sump quickly.

On-site ditches are designed for 20-year storm frequency.

OPERATION

The present landfill will continue to operate until the expansion area is ready for use. The air curtain will be continued, as at present, for appropriate solid wastes, and the same signs will be maintained stating prohibited types of waste materials. The following will not be accepted at the landfill:

> Hazardous wastes, bulk liquids, semi-solids, sludges containing free moisture, highly flammable or volatile substances, unexpended pesticide containers, pesticides, raw animal manure, septic tank pumpings, raw sewage sludge, industrial process sludge, explosives, and radio-active materials.

Five employees are currently engaged in the landfill operation, and these same employees would be utilized on the proposed expansion area.

Two D-8 tractors are used for spreading and compacting solid waste, and there is a Lima 1250 dragline and two 35-T Euclid trucks for hauling daily cover.

When the expansion area is activated, the landfill office will be moved to a location appropriate for administration of the new area.

VECTOR CONTROL

Timely application of daily cover should eliminate harboring, feeding and breeding of vectors. In the event that vector control is needed, a program will be implemented. Past experience by the management of West Lake Landfill shows the use of Decon and Purina Fly Bait to be effective without undue hazard.

GAS CONTROL

Because of the dense, vertical, limestone faces of the quarry, horizontal migration of gases is very unlikely. Natural consolidation which will accompany generation of decomposition gases will probably cause the cover material to separate from the vertical face, thereby venting the gases. Periodically, and particularly 12 months after completion of the landfill, an inspection should be made for the presence of gases. If found in detrimental quantities, perforated vent pipes, or other suitable vents should be installed.

BEAUTIFICATION

Pending determination of the effects from irrigating with leachate, no beautification is planned immediately. The management of West Lake Landfill is in contact with horticulturists to find the most

suitable vegetation for this project. Tentative plans are to plant evergreens on either side of the entrance road and at the edge of the landfill along St. Charles Rock Road.

DUST CONTROL

The waterbound macadam roads will produce dust during dry weather. Use of a water wagon will be continued to control dust.

LITTER CONTROL

Temporary, portable litter fences will be used to control blowing papers during periods of high winds. Paper must be removed from the litter fence daily.

SAFETY

The landfill site (and quarry) is fenced, with absolute control of access.

A fire extinguisher is provided on each piece of equipment used at the landfill.

Telephone for emergency communication shall be available at landfill office. Standby telephone available at Quarry Office.

JOSEPH P. TEASDALE
GOVERNOR

CAROLYN ASHFORD
DIRECTOR

missouri department of natural resources

2010 Missouri Blvd.
P.O. Box 1368 Jefferson City, Missouri 65101 314-751-3241

September 12, 1977

Mr. William J. McCullough
West Lake Landfill, Inc.
Route 1, Box 206
Bridgeton, Missouri 63042

Dear Mr. McCullough:

Please be advised that on September 6, 1977, the Department of Natural Resources, Solid Waste Management Program received an Application for Operating Permit accompanied by engineering plans, specifications and operating procedures for the West Lake Landfill, Inc. Sanitary Landfill, prepared by Mr. Paul H. Himebaugh, P.E.

These plans, specifications and operating procedures will be reviewed as soon as possible. In general, approximately 30 to 45 days are required to review the plans and process the operating permit if the plans are in approvable form. If revisions or additional information are required, a letter of comments will be prepared and sent to your consulting engineer with a copy also being sent to you.

Enclosed are several blank Application for Operating Permit forms as requested by Mr. Himebaugh. A completed application form should be completed and submitted to this office in order to complete the necessary steps for an application for operating permit for a sanitary landfill.

If you have any questions, please advise.

Sincerely,

John D. Doyle

John D. Doyle, P.E.
Solid Waste Technical Services
Solid Waste Management Program

JDD:pdi

Enclosures

cc: Paul H. Himebaugh, P.E.
St. Louis Regional Office

LAI 0136

September 16, 1977

Mr. John D. Doyle, P.E.
Missouri Department Of Natural Resources
P.O. Box 1368
2010 Missouri Blvd.
Jefferson City, Missouri 65101

Dear Mr. Doyle:

We enclose herewith copy of application in duplicate.

Very truly yours,

WEST LAKE LANDFILL, INC.

Wm. J. McCullough,
Secretary - Treasurer

WJM:cs
enclosure

LAI 0137

2

10/20/77

DEPARTMENT OF NATURAL RESOURCES
Division of Environmental Quality
P.O. Box 1368
Jefferson City, Missouri 65101

APPLICATION FOR OPERATING PERMIT

Solid waste disposal area or solid waste processing facility: (check only one)

- [X] Sanitary landfill
- [ ] Incinerator
- [ ] Compost plant
- [ ] Demolition landfill
- [ ] Transfer station
- [ ] Resource recovery plant
- [ ] Other (specify) _____

Name of Area or Facility: West Lake Landfill, Inc.

Location: City: Bridgeton County: St. Louis

U.S. Survey 1934

_____ 1/4 _____ 1/4 _____ 1/4, Section _____, Township _____, Range _____

Brief description of area or facility for which application for permit is made: (such as size or capacity) 3½ Acre Extension Area adjacent to Old St. Charles Rock Road and also to previous landfill areas.

Check type of waste proposed to be accepted:

- [X] Municipal solid waste
- [ ] Bulky waste
- [ ] Dead animals
- [ ] Incinerator residue
- [ ] Demolition and construction waste
- [ ] Brush and untreated wood waste
- [ ] Septic tank pumpings
- [ ] Wastewater treatment plant sludges
- [ ] Other sludges (specify) _____
- [ ] Liquids (specify) _____
- [ ] Industrial process waste (specify) _____
- [ ] Hazardous wastes (specify) _____
- [ ] Other waste (specify) _____ (Waste materials to be accepted will be the same) ~~(as specified in the present operating permit.)~~ (No hazardous or special wastes are included.)

Registered engineer or consulting engineering firm submitting plans:

Name: Paul H. Himebaugh PE Phone: 314-961-1150

Address: 9929 Manchester Road

City: Warson Woods State: Missouri Zip Code: 63122

OPERATOR: (Person principally responsible for the operation.)

Name _____ Phone _____

Address _____

City _____ State _____ Zip Code _____

OWNER: (Legal owner of land or facility if different than operator.)

Name _____ Phone _____

Address _____

City _____ State _____ Zip Code _____

If granted this permit, we the undersigned, agree to abide by the rules, regulations, orders and decisions of the Missouri Department of Natural Resources. We understand that in the event of any false or fraudulent information in the application, plans and data, or of failure to operate the area or facility in a proper and legal manner, the permit may be revoked after due notice from the Missouri Department of Natural Resources. We understand the permit is not transferable.

Wm J McCullagh
SIGNATURE OF OPERATOR _____ DATE _____

SIGNATURE OF OWNER _____ DATE _____

LAI 0138

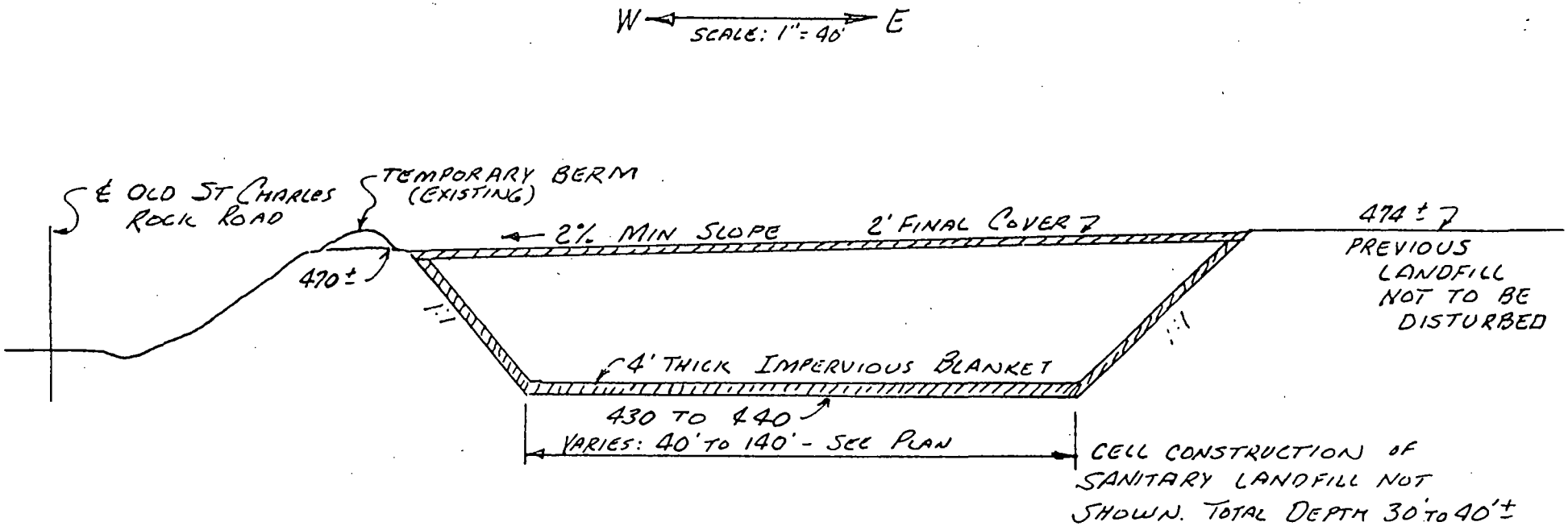

CROSS SECTION THRU PROPOSED EXTENSION AREA

WEST LAKE LANDFILL INC.

OCT 20, 1977

PAUL H. HIMEBAUGH
CONSULTING ENGINEER
5929 MANCHESTER ROAD
WARSON WOODS, MO. 63122

JOSEPH P. TEASDALE
GOVERNOR

CAROLYN ASHFORD
DIRECTOR

missouri department of natural resources

2010 Missouri Blvd.
P.O. Box 1368 Jefferson City, Missouri 65101 314-751-3241

May 23, 1978

Mr. W. J. McCullough
Secretary - Treasurer
West Lake Landfill, Inc.
Route 1, Box 206
Bridgeton, Missouri 63042

Dear Mr. McCullough:

This is to acknowledge receipt and approval of revised engineering plans submitted by Paul H. Himebaugh, Consulting Engineer, for the three and one-half acre expansion to the existing permitted sanitary landfill operated by West Lake Landfill, Inc. By this letter we hereby approve operation of the three and one-half acre expansion area under the provisions of the existing sanitary landfill operating permit. This approval is given with the understanding that the landfill will be operated in accordance with the Missouri Solid Waste Rules and Regulations and the engineering design plans dated December 10, 1977.

This approval is given with the following recommendations:

1. that a new leachate collection well be constructed at the south end of the proposed expansion area, as indicated in the engineering plans as an alternate method of handling the leachate. It is not necessary that the leachate collection well be constructed larger than that required for the lowering of pumping equipment into the well. This recommendation is made because of the indicated depth of leachate in the existing landfill leachate collection well. If you attempt to excavate into the permitted landfill area, leachate may flow out into the expansion area, causing operational problems and odors.

2. that two additional monitoring wells be constructed along the west side of the new expansion area between the landfill and Old St. Charles Rock Road. The monitoring wells should be constructed to a depth of at least 427' or to a depth of ten feet into the groundwater.

LAI 0139

Copy of letter from Robinson to St. Louis County

MISSOURI DEPARTMENT OF NATURAL RESOURCES
P.O. Box 1368 2010 Missouri Blvd. Jefferson City, Missouri 65102 (314) 751-3241

December 28, 1978

Department of Community Health and Medical Care
JAN 12 1979
Division of Environmental Health Care Services

Mr. Clifford Mitchell
Associate Director
Environmental Health Services
St. Louis County Department of
Community Health and Medical Care
801 South Brentwood Blvd.
Clayton, MO 63105

Dear Mr. Mitchell:

Please find enclosed a copy of revised engineering plans for the expansion of the West Lake Landfill in St. Louis County. Also enclosed is a copy of the original plans submitted in August 1977 for the expansion. These are extra copies for your office. We anticipate completing our review of the revised engineering plans sometime around the middle of January. We would appreciate receiving any comments your office may have for consideration during our review of the application and engineering plans.

Your assistance will be appreciated.

Sincerely,

Robert M. Robinson

Robert M. Robinson, P.E.
Director
Solid Waste Management Program

RMR:pdi

Enclosures

cc: St. Louis Regional Office

MISSOURI DEPARTMENT OF NATURAL RESOURCES
P.O. Box 176 Jefferson City, Missouri 65101 (314) 751-4422

January 25, 1979

Ms. Catherine Cruse, President
West Lake Landfill, Inc.
Route 1, Box 206
Bridgeton, MO 63042

Dear Ms. Cruse:

Enclosed is the official Solid Waste Disposal Area Operating Permit for West Lake Landfill, Inc., which I believe is self-explanatory. Also enclosed is a copy of the Report of Approval of Plans and Specifications for Solid Waste Disposal Area, St. Louis, Missouri, dated January 18, 1979, which is made a part of the description and conditions of this permit.

If you have any questions, please advise.

Sincerely,

Robert M. Robinson

Robert M. Robinson, P.E.
Director
Solid Waste Management Program

RMR:pdi

Enclosures

cc: Mr. William J. McCullough, Vice President
Mr. L. E. Trump
East-West Gateway Coordinating Council
St. Louis Regional Office
Mr. Paul Himebaugh, P.E.

Joseph P. Teasdale Governor
Carolyn Ashford Director

LAI 0141

2

REPORT OF APPROVAL OF PLANS AND SPECIFICATIONS
FOR SOLID WASTE DISPOSAL AREA
ST. LOUIS, MISSOURI

January 18, 1979

INTRODUCTION

An Application for Operating Permit has been filed with the Missouri Department of Natural Resources requesting a permit to operate a sanitary landfill designated in the application as the West Lake Sanitary Landfill. The application was filed by Catherine Cruse, President, West Lake Landfill, Inc. Plans, specifications and operating procedures for the West Lake Sanitary Landfill, St. Louis County, Missouri, have been submitted to the Department of Natural Resources, Solid Waste Management Program, for review and approval by Paul H. Himebaugh, P.E. These plans, specifications and operating procedures have been reviewed for compliance with the Missouri Solid Waste Management Law (Sections 260.200 to 260.245, RSMo., Cum. Supp. 1975) and the Missouri Solid Waste Rules and Regulations.

BRIEF DESCRIPTION

The proposed sanitary landfill is located in U.S. Survey 131, Township 47 N., Range 5 E., St. Louis County, Missouri. The proposed site consists of a total of approximately 212.59 acres of which approximately 13 acres will be utilized for the sanitary landfill. The types of waste to be accepted will consist of municipal solid waste. No hazardous wastes, bulk liquids, semi-solids, sludges containing free moisture, highly flammable or volatile substances, unexpended pesticide containers, pesticides, raw animal manure, septic tank pumpings, raw sewage and industrial process sludges, radioactive materials, and explosives shall be accepted. The area method of sanitary landfill operation will be utilized to fill the open pit limestone quarry where mining is no longer taking place.

All fencing, gates, equipment maintenance buildings, all-weather access roads, signs, surface-water control devices, operating equipment, standby equipment and other necessary appurtenances shall be provided as per the approved plans, specifications and operating procedures.

APPROVAL

The plans, specifications and operating procedures described above have been examined as to sanitary features of design which might affect the operation of the solid waste disposal area as a sanitary landfill. Approval of the plans, specifications and operating procedures is hereby given. This approval is given with the explicit understanding that the sanitary landfill will be

APPROVAL CONT.

developed and operated in compliance with the plans, specifications and operating procedures, with the Missouri Solid Waste Rules and Regulations, and in accordance with the Missouri Solid Waste Management Law. This approval is not to be construed as compliance with any existing local ordinances or zoning requirements. The Department of Natural Resources reserves the right to withdraw the approval of these plans, specifications and operating procedures at any time that it is found that additional construction or alteration of the sanitary landfill is necessary to assure compliance with the rules and regulations and to afford adequate protection of the public health.

Roma P. Jenkins

Roma P. Jenkins
Environmental Engineer
Technical Services Section
Solid Waste Management Program

RPJ:dl

MISSOURI DEPARTMENT OF NATURAL RESOURCES
Division of Environmental Quality
Solid Waste Management Program

SOLID WASTE DISPOSAL AREA OPERATING PERMIT

In accordance with Section 260.205, Paragraph 2, RSMo, Supplement 1973, the Missouri Department of Natural Resources hereby approves the application and issues Permit Number 118906 to West Lake Landfill, Inc. Cathenine Cruse, President, for the operation of a solid waste disposal area set forth in the application as the West Lake Sanitary Landfill, Inc. located in the U.S. Survey 131, Township 47 N., Range 5 E., St. Louis County, Missouri. This permit applies only to that tract of land of approximately 13 acres covered by the engineering plans, specifications and operating procedures submitted to the Department.

Operation of this solid waste disposal area shall be in accordance with the provisions of the Missouri Solid Waste Management Law (Sections 260.200 to 260.245, RSMo, Supplement 1973), the rules and regulations promulgated thereunder, and the engineering plans, specifications and operating procedures approved by the Department. The Department does not examine structural features or design or efficiency of mechanical equipment and the issuance of this permit does not imply approval of those features.

The Department reserves the right to revoke or modify this permit after due notice if it is found that the holder of the permit is in violation of the Missouri Solid Waste Management Law, the Missouri Solid Waste Rules and Regulations, or failure to operate in accordance with the approved plans, specifications and operating procedures or is creating a public nuisance, health hazard or environmental pollution. Furthermore, if it is found that additional construction or alteration of the solid waste disposal area is necessary to comply with any and all rules and regulations promulgated in accordance with the Missouri Solid Waste Management Law, then, and in that event, the Department has and does hereby reserve the right to revoke or modify this permit.

This permit for operation of a solid waste disposal area is issued only to the person named in the application and shall not be transferable. This permit shall become void after notice to the Department by the person named in the permit that said person has discontinued operation of the disposal area. The Department may revoke this permit after determining an area has not operated for a period of one year. This permit is issued contingent upon and may be revoked for failure to comply with any and all conditions described on the attached "Report of Approval of Plans and Specifications for Solid Waste Disposal Area".

By Fred A. Lafser
DIRECTOR, DEPARTMENT OF NATURAL RESOURCES

Date January 22, 1979

LAI 0143

REITZ & JENS, INC.
CONSULTING ENGINEERS
111 SOUTH MERAMEC AVENUE
ST. LOUIS, MISSOURI 63105
(314) 727-0403

HENRY M. REITZ, PRESIDENT
STIFEL W. JENS, SENIOR VICE PRESIDENT
JOHN J. BAILEY, JR., VICE PRES., CHIEF ENG.
DAVID E. MURRAY, VICE PRESIDENT
DONALD S. ESKRIDGE, SECRETARY

SOIL MECHANICS-FOUNDATIONS
HYDROLOGY-HYDRAULICS
RESOURCE RECLAMATION
DRAINAGE-PAVEMENTS
LAND DEVELOPMENT
WATER RESOURCES
SOLID WASTE

May 1, 1980

Mr. Robert M. Robinson, Director
Solid Waste Management Program
Mo. DNR
Box 1368
Jefferson City, MO 65102

Re: West Lake Landfill
Proposed Expansion

Dear Mr. Robinson:

Enclosed for your review are 3 copies of the Memorandum Report on the Proposed Expansion of the West Lake Landfill Operation, and the Permit Application for the 6 acre expansion.

The proposed expansion site is located adjacent to an old landfill area on the back side of the West Lake Quarry property.

The present landfilling operation area is rapidly filling up and should be closing out in June 1980. Landfilling in the proposed expansion area will help smooth out the closing of the present landfilling operation, fill in a low area, and provide much needed additional landfill volume.

We will be glad to discuss this in further detail with you if you so desired, or to meet with you at your convenience for any comments or suggestions you may have regarding this application. If there are any questions, please call.

Very truly yours,

David E. Murray

DAVID E. MURRAY

Encl.
DEM/nr
cc: Wm. J. McCullough

LAI0144

E 1501 — 12/75

DEPARTMENT OF NATURAL RESOURCES

Division of Environmental Quality
P.O. Box 1368
Jefferson City, Missouri 65101

APPLICATION FOR OPERATING PERMIT

Solid waste disposal area or solid waste processing facility: (check only one)

- [x] Sanitary landfill
- [ ] Incinerator
- [ ] Compost plant
- [ ] Demolition landfill
- [ ] Transfer station
- [ ] Resource recovery plant
- [ ] Other (specify) _____

Name of Area or Facility: West Lake Landfill, Inc.

Location: City: Bridgeton County: St. Louis

U.S. Survey 131 ____ 1/4 ____ 1/4 ____ 1/4, Section ____, Township 47N, Range 5E

Brief description of area or facility for which application for permit is made: (such as size or capacity) This 6+ acre expansion area is west of the asphalt plant and east of the old landfill area bordering Old St. Charles Rock Road.

Check type of waste proposed to be accepted:

- [x] Municipal solid waste
- [ ] Bulky waste
- [ ] Dead animals
- [ ] Incinerator residue
- [x] Demolition and construction waste
- [ ] Brush and untreated wood waste
- [ ] Septic tank pumpings
- [ ] Wastewater treatment plant sludges
- [ ] Other sludges (specify) _____
- [ ] Liquids (specify) _____
- [ ] Industrial process waste (specify) _____
- [ ] Hazardous wastes (specify) _____
- [ ] Other waste (specify) _____

Registered engineer or consulting engineering firm submitting plans:

Name: Reitz & Jens, Inc. Phone: 727-0403
Address: 111 S. Meramec
City: St. Louis State: MO Zip Code: 63105

OPERATOR: (Person principally responsible for the operation.)
Name: William J. McCullough Phone: (314) 739-1122
Address: 13570 St. Charles Rock Road
City: Bridgeton State: Missouri Zip Code: 63044

OWNER: (Legal owner of land or facility if different than operator.)
Name: _____ Phone: _____
Address: _____
City: _____ State: _____ Zip Code: _____

If granted this permit, we the undersigned, agree to abide by the rules, regulations, orders and decisions of the Missouri Department of Natural Resources. We understand that in the event of any false or fraudulent information in the application, plans and data, or of failure to operate the area or facility in a proper and legal manner, the permit may be revoked after due notice from the Missouri Department of Natural Resources. We understand the permit is not transferable.

Wm McCullough E. V. Pres
SIGNATURE OF OPERATOR — DATE

Wm McCullough E. V. Pres
SIGNATURE OF OWNER — DATE May 2, 1988

LAI 0145

NEWS RELEASE

The Missouri Department of Natural Resources is inviting citizens to comment on a proposed expansion of the West Lake Landfill, St. Louis County. The landfill, owned and operated by West Lake Landfill, ~~Inc.~~, William J. McCullough, Executive Vice President, disposes of municipal solid waste and demolition and construction waste.

Natural Resources received an application to expand the existing landfill site. If citizens request a public meeting or if comments indicate the necessity, the department will schedule a public meeting in St. Louis County before making a decision on whether to issue a permit for expansion.

To help insure that the landfill is managed safely, the solid waste management regulations require the landfill operator to follow the detailed engineering plans that must be approved by the department's solid waste management program. The engineering plans, submitted by a registered professional engineer, specify the effective disposal techniques that will protect the environment, and eliminate public health and nuisance problems.

An earth cover of six inches must be applied every day the landfill is operated. When any area of the landfill has been completely filled, a final earth cover of two feet is placed over the area.

The site is located on the west side of the West Lake Quarry property in U.S. Survey 131, Township 47 North, Range 5 East. The proposed expansion area is west of the asphalt plant and east of the old landfill area bordering Old St. Charles Rock Road.

Questions or comments can be sent to the Missouri Department of Natural Resources, Solid Waste Management Program, Box 1368, Jefferson City, Missouri 65102. Comments will be accepted until June 6, 1980.

LAI 0146

2

August 27, 1980

MISSOURI DEPARTMENT OF NATURAL RESOURCES
P.O. Box 1368 1915 Southridge Drive Jefferson City, Missouri 65102 (314)751-3241

Mr. William J. McCullough
13570 St. Charles Rock Road
Bridgeton, MO 63044

Dear Mr. McCullough:

Enclosed is your official "Solid Waste Disposal Area Operating Permit," which I believe is self-explanatory. Also enclosed is a copy of the "Report of Approval of Plans and Specifications for Solid Waste Disposal Area, St. Louis County, Missouri," dated August 22, 1980, which is made a part of the description and conditions of this permit.

If you have any questions, please advise.

Sincerely,

Robert M. Robinson

Robert M. Robinson, P.E.
Director
Solid Waste Management Program

RMR:pdi

Enclosures

cc: Reitz & Jens, Inc.
East-West Gateway Coordinating Council
St. Louis Regional Office

Joseph P. Teasdale Governor
Fred A. Lafser Director

Division of Environmental Quality
Robert J. Schreiber Jr., P.E. Director

LAI 0147

MISSOURI DEPARTMENT OF NATURAL RESOURCES
Division of Environmental Quality
Solid Waste Management Program

SOLID WASTE DISPOSAL AREA OPERATING PERMIT

In accordance with Section 260.205, Paragraph 2, RSMo, Supplement 1973, the Missouri Department of Natural Resources hereby approves the application and issues Permit Number 118908 *to* Mr. William J. McCullough *for the operation of a solid waste disposal area set forth in the application as the* West Lake Landfill *located in the* U.S. Survey 131, *Township* 47 N., *Range* 5 E., St. Louis *County, Missouri. This permit applies only to that tract of land of approximately* 6 *acres covered by the engineering plans, specifications and operating procedures submitted to the Department.*

Operation of this solid waste disposal area shall be in accordance with the provisions of the Missouri Solid Waste Management Law (Sections 260.200 to 260.245, RSMo, Supplement 1973), the rules and regulations promulgated thereunder, and the engineering plans, specifications and operating procedures approved by the Department. The Department does not examine structural features of design or efficiency of mechanical equipment and the issuance of this permit does not imply approval of those features.

The Department reserves the right to revoke or modify this permit after due notice if it is found that the holder of the permit is in violation of the Missouri Solid Waste Management Law, the Missouri Solid Waste Rules and Regulations, or failure to operate in accordance with the approved plans, specifications and operating procedures or is creating a public nuisance, health hazard or environmental pollution. Furthermore, if it is found that additional construction or alteration of the solid waste disposal area is necessary to comply with any and all rules and regulations promulgated in accordance with the Missouri Solid Waste Management Law, then, and in that event, the Department has and does hereby reserve the right to revoke or modify this permit.

This permit for operation of a solid waste disposal area is issued only to the person named in the application and shall not be transferable. This permit shall become void after notice to the Department by the person named in the permit that said person has discontinued operation of the disposal area. The Department may revoke this permit after determining an area has not operated for a period of one year. This permit is issued contingent upon and may be revoked for failure to comply with any and all conditions described on the attached "Report of Approval of Plans and Specifications for Solid Waste Disposal Area".

By Fred A Hafer
DIRECTOR, DEPARTMENT OF NATURAL RESOURCES

Date August 27, 1980

REPORT OF APPROVAL OF PLANS AND SPECIFICATIONS FOR SOLID WASTE DISPOSAL AREA ST. LOUIS COUNTY, MISSOURI

August 22, 1980

INTRODUCTION

An Application for Operating Permit has been filed with the Missouri Department of Natural Resources requesting a permit to operate a sanitary landfill designated in the application as the West Lake Landfill. The application was filed by William J. McCullough. Plans, specifications, and operating procedures for the West Lake Landfill, St. Louis County, Missouri, have been submitted to the Department of Natural Resources, Solid Waste Management Program, for review and approval by Reitz & Jens, Inc. These plans, specifications, and operating procedures have been reviewed for compliance with the Missouri Solid Waste Management Law (Sections 260.200 to 260.245, RSMo., Cum. Supp. 1975) and the Missouri Solid Waste Rules and Regulations.

BRIEF DESCRIPTION

The proposed sanitary landfill is located in U.S. Survey 131, Township 47 N., Range 5 E., St. Louis County, Missouri. The proposed site consists of a total of approximately six acres, which will be utilized for the sanitary landfill. The types of waste to be accepted will consist of municipal solid waste and demolition and construction wastes. No hazardous wastes, bulk liquids, semi-solids, sludges containing free moisture, highly flammable or volatile substances, unexpended pesticide containers, pesticides, raw animal manure, septic tank pumpings, raw sewage and industrial process sludges, radioactive materials, and explosives shall be accepted. The area method of sanitary landfill operation will be utilized.

All fencing, gates, equipment maintenance buildings, all-weather access roads, signs, surface-water control devices, operating equipment, standby equipment, and other necessary appurtenances shall be provided, as per the approved plans, specifications, and operating procedures.

CONDITIONS

The following conditions are an integral part of the permit and shall, in part, determine compliance with the Missouri Solid Waste Management Law, Rules, and Regulations.

1. Monitoring wells 35, 36, 37, 37A, 38, 39, 40, and 41 shall be monitored annually for the following:

pH	COD
Conductivity	Ammonia
BOD_5	Nitrate
Total Dissolved Solids	Phosphate
Chloride	TOC
Sulfate	Mercury
Fluoride	Iron
Hardness	Arsenic
Barium	Lead
Cadmium	Selenium
Chromium	Silver
Copper	Manganese
Color	Zinc
Odor	Foaming Agents

The following parameters shall be analyzed for on a quarterly basis:

pH	Chloride
Conductivity	COD
Total Dissolved Solids	Iron
Water level in the well	

Results of all sampling should be submitted to the Solid Waste Management Program in a timely manner.

APPROVAL

The plans, specifications, and operating procedures described above have been examined as to sanitary features of design which might affect the operation of the solid waste disposal area as a sanitary landfill. Approval of the plans, specifications, and operating procedures is hereby given. This approval is given with the explicit understanding that the sanitary landfill will be developed and operated in compliance with the plans, specifications, operating procedures, and conditions of the permit, with the Missouri Solid Waste Rules and Regulations, and in accordance with the Missouri Solid Waste Management Law. This approval is not to be construed as compliance with any existing local ordinances or zoning requirements. The Department of Natural Resources reserves the right to withdraw the approval of these plans, specifications, and operating procedures at any time that it is found that additional construction or alteration of the sanitary landfill is necessary to assure compliance with the rules and regulations and to afford adequate protection of the public health.

Thomas B. Ellis

Thomas B. Ellis
Environmental Engineer
Solid Waste Management Program

TBE:pdi

MISSOURI DEPARTMENT OF NATURAL RESOURCES
Jefferson City, Missouri 65102 (314)751-3241

2

RECEIVED
JAN 21 1981
REITZ & JENS, INC.

January 19, 1981

Mr. David E. Murray
Reitz & Jens, Inc.
1040 North Lindbergh
St. Louis, MO 63132

Dear Mr. Murray:

This letter is in reference to our meeting on Monday, January 12, 1981, at the Solid Waste Management Program office in Jefferson City. The main subject of discussion was the proposed refilling and regrading of a northeast portion of the West Lake Sanitary and Demolition Landfills. It was proposed that demolition waste be utilized to bring the site contours to a grade that would enhance surface runoff and prevent ponding.

After a further review of the situation, which included discussions with Tom Ellis and a review of the originally permitted plans, the following positions on the proposal are taken by this office:

1. We agree with the principle of regrading the site to promote surface runoff and prevent ponding of surface waters.

2. Before any further consideration of the project can be made, the following background information should be submitted:

   a. A plan map showing as-is conditions in the area, to include: all past and present quarry and landfill operations; as-is topographic contours for the entire mapped area; and all buildings which will have a bearing on the proposed operation of regrading.

   b. Mention was made of a concrete operation on the north edge of the site. The length of the lease and the extent of the operation was not known at the time of our meeting. We feel this information will be pertinent to the project.

3. The proposed area of concern was presented as roughly the northeastern half of the landfill site permitted under official operating permit numbers 218903 and 118903. The final permitted contours for this area

hristopher S. Bond Governor
Fred A. Lafser Director

Division of Environmental Quality
Robert J. Schreiber Jr., P.E. Director

LAI 0149

can be found on plate #10-0 of the original plans submitted by Rogers and Associates Consulting Engineers and dated 6/74. Your verbal proposal for the regrading of the northeastern half of this area called for 3% to 4% slopes and raising the present elevations up to 25 additional feet.

We would like to see one single plan submitted at this time to outline the regrading of the entire area covered by permit numbers 218903 and 118903. Original final contours called for drainage of this area to be in the easterly direction. Regrading of only the eastern portion of this area will cause severe changes in the overall drainage in the entire area. Therefore, if any regrading should be done, then the whole area should be regraded and addendum final contours proposed.

We also feel that final slopes should be limited to around 2% to reduce the need to raise final elevations grossly above the originally permitted final elevations.

4. The specific types of demolition wastes to be utilized should be listed. It is felt that inert and inorganic material should constitute the majority of the waste, with minimal paper or wood waste being allowed.

Please also find enclosed two plan sheets which were left at our office. If you have any questions or comments, please advise.

Sincerely,

Thomas R. Gredell

Thomas R. Gredell
Environmental Engineer
Solid Waste Management Program

TRG:dl

Enclosures

2

REITZ & JENS, INC.

CONSULTING ENGINEERS

1040 NORTH LINDBERGH

ST. LOUIS, MISSOURI 63132

(314) 993-4132

HENRY M. REITZ, PRESIDENT
STIFEL W. JENS, SENIOR VICE PRESIDENT
JOHN J. BAILEY, JR., VICE PRES., CHIEF ENG.
DAVID E. MURRAY, VICE PRESIDENT
DONALD S. ESKRIDGE, SECRETARY

SOIL MECHANICS-FOUNDATIONS
HYDROLOGY-HYDRAULICS
RESOURCE RECLAMATION
DRAINAGE-PAVEMENTS
LAND DEVELOPMENT
WATER RESOURCES
SOLID WASTE

Holding Lagoon

April 23, 1981

Mr. Tom Dean
Missouri Geological Survey
Box 250
Rolla, MO 65401

Re: Proposed Temporary Holding Basin
West Lake Landfill

Dear Tom:

This is a followup of our recent discussions concerning the possibility of constructing a temporary holding basin in the field on the west side of Old St. Charles Rock Rd. opposite the treatment lagoons. This basin would hold approximately 30 million gallons of leachate from Black Diamond Lake until it can be processed through the adjacent treatment facilities.

Enclosed, for your information and file, is a copy of an aerial photo showing the proposed location along with copies of logs giving test hole information. Test holes were excavated with a backhoe this morning under the direction of Mr. Dan Binz of our office. Soil samples were collected and are being held at our soils laboratory for your examination, if you desire.

It is planned to construct this temporary basin for holding 5+ acres of leachate 20 feet deep until it can be processed at the adjacent treatment facilities. Preliminary consideration was to excavate 8 feet deep with 3 to 1 side slopes on the lagoon. Possible considerations for containing the leachate are:

1. Recompacted clay layer three feet thick;
2. Recompacted three-foot layer, using bentonite;
3. Lining the lagoon with a 20-mil PVC membrane.

As previously discussed, monitoring wells will be installed upgradient and downgradient of this holding basin.

We would appreciate your review of this at your earliest convenience to we may proceed with plans. If you have any questions, please call.

Very truly yours,

David E. Murray

DAVID E. MURRAY

Encl.
DEM/rs
cc: West Lake Landfill
E. Holtgraewe
R.M. Robinson

LAI 0150

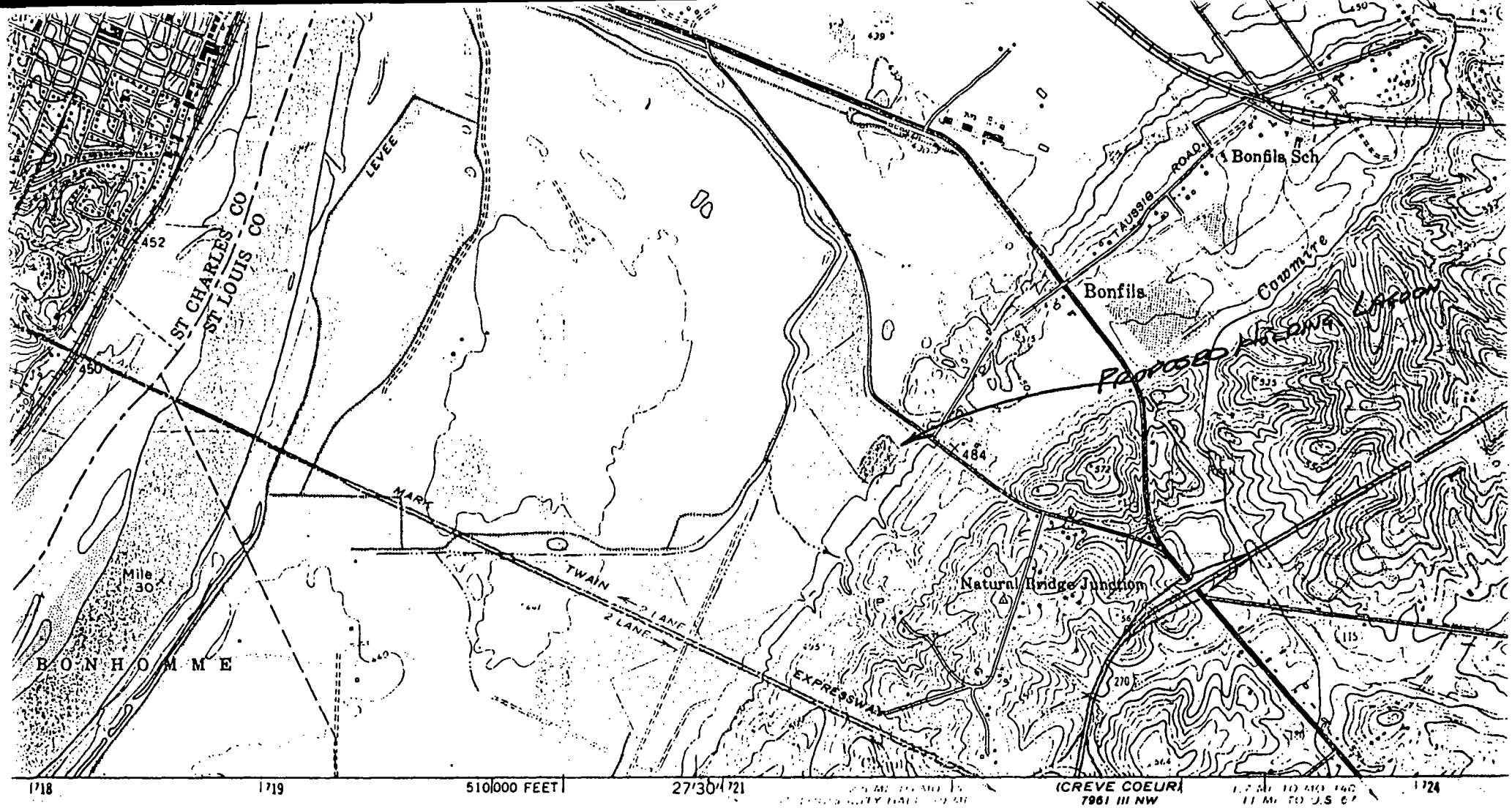

rmy Map Service
l use by the Geological Survey
SC&GS, and USCE

ial photographs by photogrammetric methods
ken 1952. Field check 1954

1927 North American datum
sed on Missouri coordinate system, east zone
l Transverse Mercator grid ticks, zone 15,

a in which only landmark buildings are shown

rple compilation [illegible]
ken 1968. [illegible]

xtensions [illegible]

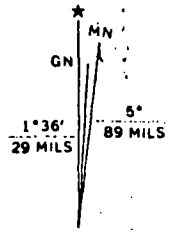

UTM GRID AND 1968 MAGNETIC NORTH
DECLINATION AT CENTER OF SHEET

SCALE 1:24 000

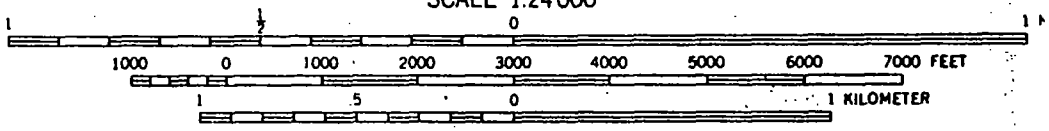

CONTOUR INTERVAL 10 FEET
DATUM IS MEAN SEA LEVEL

THIS MAP COMPLIES WITH NATIONAL MAP ACCURACY STANDARDS
FOR SALE BY U. S. GEOLOGICAL SURVEY, DENVER, COLORADO 80225, OR WASHINGTON, D. C. 20
AND BY THE MISSOURI GEOLOGICAL SURVEY, ROLLA, MISSOURI 65401
A FOLDER DESCRIBING TOPOGRAPHIC MAPS AND SYMBOLS IS AVAILABLE ON REQUEST

PART II

PROPOSED SANITARY LANDFILL EXPANSION DESIGN

A. LOCATION AND DESCRIPTION

The proposed sanitary landfill expansion site is located in U.S. Survey 131, Township 46N, Range 5E. The 33-acre landfill expansion site (shown on Drawing No. 1) is just south of the existing landfill and has a volume of approximately 13,000,000 cubic yards. This will provide an approximate landfill life of 30 years, assuming the landfill continues to receive the quantities of solid waste described in PART I. The depth of landfill will range from 210 to 275 feet with the major portion about 250 feet.

Access for the landfill expansion will be via Old St. Charles Rock Road, an existing site entrance road, and an existing quarry service road which goes down into the expansion area along the northwest and southwest quarry walls. The initial temporary extension of this road on the quarry floor is shown on Drawing No. 2. Current quarry operations in the expansion area are limited to the northwest wall and a final layer of rock being removed from the quarry floor. The depth of this layer of rock varies from 6 to 20 feet. Proposed initial landfill contours, including the effects of the ongoing quarry operations, are shown on Drawing No. 2. Quarry operations in the area of the landfill expansion are expected to be completed in approximately 1985.

LAI 0151

The landfill expansion site lies entirely within the City of Bridgeton. City zoning for the site and surrounding land within 1/4-mile of the site is shown on Drawing No. 1. The expansion site itself is zoned Manufacturing District, Limited (M-1). This is the same zoning classification that the currently operating landfill site has. Due to the land use prior to adoption of the City Zoning Ordinance, no zoning change or special use permit is required for the landfill.

The site is surrounded on the west and south by the quarry operations of the landfill operator, on the east by a farming operation, and on the north by industrial facilities. The farmhouse east of the site and a house near the northeast corner of the current landfill are the only residences within 1/4-mile of the site, and there are no known water supply wells within the 1/4-mile surrounding boundary. To the north, three industries and two commercial establishments are located within the 1/4-mile boundary. There are no utility easements or lines located on the actual disposal site. The final use of the site will be for as yet undesignated commercial operations.

B. GEOLOGIC SETTING

The limestone and dolomite quarry has vertical walls rising roughly 200 to 230 feet above the quarry floor. The bedrock formations being quarried are the St. Louis limestone and the Salem limestone and dolomite, both of the Mississippian System. The quarry floor is in the shaley upper portion of the Warsaw Formation. This shale has a very low permeability.

The Geologic Map of Missouri indicates that the Cherokee Group (Pennsylvanian) and the underlying Ste. Genevieve Formation (Mississippian) are present above the St. Louis Formation in this area. These two bedrock units are very thin or absent at the quarry site.

The limestone units are generally massive and unfractured. A narrow system of vertical fractures occurring in the northeastern corner of the quarry has been pressure grouted to eliminate moderate flows (estimated maximum rate = 100 gpm) which have previously seeped into the quarry.

To the west of the quarried area the bedrock surface drops off drastically toward the Missouri River. Groundwater within the river alluvium occurs at an elevation of over 150 feet above the quarry floor. Because very little water enters the quarry from the west face, the limestone is considered to be nearly impermeable. Furthermore the landfill design provides for pumping the leachate so the depth will never exceed more than 20 feet. Therefore, the potential for groundwater or drinking water contamination is considered nil, and no groundwater monitoring wells are proposed in the expansion area site.

The bluffs south of the quarry are proposed as the source of cover material. These are mantled with several tens of feet of loess. Loess typically consists primarily of silt with some clay and fine sand. The plasticity of loess typically ranges from low to high.

C. PROPOSED LANDFILLING METHOD

The existing and proposed final contours of the sanitary landfill are shown on Drawing Nos. 2 and 3. The landfill will use the area method with 8- to 10-foot-high lifts. The landfill has been divided into Areas 1 and 2 as shown on Drawing No. 2 for the purpose of explaining the sequence of fill. Before landfilling starts in Area 1, a soil embankment will be constructed between Areas 1 and 2. This soil embankment will provide initial hydraulic isolation of the two areas.

Landfilling will begin in Area 1 with a row of cells constructed along the northeast wall of Area 1. The rows of cells will progress to the southwest end of Area 1. The landfill lifts will have a top surface that drains slightly to the southwest. The fill side slope between Areas 1 and 2 will be a maximum of 3 to 1.

Phase I of Area 1 will be completed when the landfill lifts reach the approximately elevation 300.0. One foot of soil will be applied to the landfill surface and again graded to drain slightly toward the southwest.

Fill progression in Area 2 will be similar to Area 1. The initial row of cells will be placed on the quarry floor against the Area 1 fill, and the rows of cells will progress to the southwest quarry wall. The fill surface will be left with essentially no slope and will be undulating to promote

percolation of the rainwater throughout the fill. The first phase of the Area 2 fill will be complete when the fill elevation reaches approximately 300.0.

After completion of the initial phases of fill in both Area 1 and Area 2, the area will be filled by completing lifts over the entire area from the northeast to the southwest. The fill surface will be undulating with no overall slope, except to maintain a well-drained roadway. After the completion of each new lift, a new rock road providing all-weather access will be constructed across the top of the landfill. Temporary rock roads will be installed from the major interior road to the active working face of the landfill as required.

As the fill elevation increases, the proposed landfill will extend over portions of the current landfill until the final elevation in Drawing No. 3 are attained. Where waste is placed over a completed portion of the current landfill, the in-place cover material will be removed prior to placement of the waste. The excavated cover material will be stockpiled for later use. The primary crusher unit presently located within the quarry at approximately elevation 410 will be relocated prior to landfilling above elevation 400.0. The expansion of the landfill will enhance the quarry reclamation and improve the final surface drainage.

D. SURFACE WATER DRAINAGE

The topography of the expansion site perimeter currently allows off-site water to drain onto the site in two locations. The first is directly to the north where runoff water from the current landfill operation flows down into the quarry bottom. A second location is at the northwest corner of the expansion site adjacent to the present crusher operation. Otherwise, surface drainage is directed away from the quarry operation.

Initially, a sump will be constructed just east of the crusher operation as shown on Drawing No. 2. An earth diversion berm will be constructed along the top of the quarry in the area of the crusher operation to divert surface water into the sump. The sump will be 10 feet deep and the water will be pumped to the existing pond just west of the crusher operation.

Surface water from the current landfill site will continue to drain into the expansion site. Most of this water currently is collected in the existing leachate collection ponds. As these ponds are removed and filled with waste, this water will percolate through the waste and be removed as leachate. Most of the current landfill surface area ultimately will slope to drain toward the west as shown on Drawing No. 3.

Surface drainage within the quarry area will proceed in phases along with the landfilling operation. Initial construction on the quarry floor will include two surface drains in Expansion Area 2. These will be constructed by blasting the quarry floor and leaving the limestone rock in place. The drains will transport surface water in Area 2 to a 40-foot by 80-foot sump

constructed in a similar manner. However, sufficient rock from the sump will be removed to allow construction of the base of a 48-inch RCP riser pipe. This pipe will be used to initially withdraw surface water from the sump, and as the initial lift is placed in Area 2 the sump will be used to pump leachate.

During the initial Phase I operation of the landfill in Area 1, surface drainage from Area 1 will be pumped out of the quarry through an existing pipe in the northeast corner of the quarry. Water will be pumped from Area 2 to the existing drainage channel along the southwest boundary of the landfill. An NPDES permit application for this discharge has been submitted to the Missouri Department of Natural Resources. As the fill operation moves into Area 2, surface drainage will continue to be pumped out of the Area 2 sump until solid waste is filled to within 100 feet of the sump or analyses of the removed water indicate that leachate is draining into the sump. At this time, pumping of surface water drainage from the quarry will cease and water entering the quarry will be removed as leachate.

The final landfill contours will allow surface drainage to flow off the fill surface into the perimeter drainage system (see Drawing No. 3). Perimeter drainage along the expansion landfill property line will include a drainage channel along the southeast property boundary and an earth diversion berm directing surface drainage from the northeast landfill surface to the new drainage channel. The existing landfill area which will be raised by the proposed landfilling operation will be drained by the existing surface drainage inlet and pipe on the east side and by a new drainageway to be

constructed at the northwest boundary of the existing fill area. This drainage will flow by gravity through a let-down pipe consisting of a 15-inch CSP or corrugated polyethylene pipe to an existing stormwater manhole. A small portion of the surface drainage along the southeastern boundary of the existing landfill and the northeastern boundary of the expansion site will flow to an existing off site drainageway.

The western side of the landfill site is owned by the landfill operator, and detailed development of the surface drainage in this area will depend on the land use at the time of closure. As long as the existing crushing plant remains in operation, the crusher area will drain to the sump and be pumped as discussed earlier. Should the crushing plant be taken out of operation the area would be filled with soil and graded to drain.

E. LEACHATE MANAGEMENT

1. ADDITIONAL LEACHATE QUANTITY

During most of the expansion area's active life, all of the water entering the quarry will be allowed to percolate into the fill creating leachate. After construction of the initial surface drainage facilities, the only water entering the expansion area should be precipitation and the surface drainage from the current landfill. The latter flow will not be considered additional leachate since most of it is currently being caught in the existing leachate ponds.

The maximum additional annual leachate generation was calculated by subtracting the estimated evaporation losses and leachate quantity absorbed by the solid waste from the total annual precipitation volume over the site. The increase in net annual leachate generation volume was estimated at 9,400,000 gallons per year based on the following assumptions:

a. Mean annual precipitation is 37 inches/year.

b. Precipitation in the expansion site is the only source of water contributing to additional leachate production.

c. Landfill surface area is 33 acres.

d. Significant quarry wall seepage into the expansion portion of the landfill will have been eliminated by grouting.

e. Thirty-five percent of annual precipitation will evaporate from the bare soil landfill surface. (Use of Water Balance Method for Predicting Leachate Generation from Solid Waste Disposal Sites, EPA 530/SW-168, 1975, p. 24).

f. Additional field storage of water by solid waste (including soil cover) is 15 percent by volume. (EPA 530/SW-168, 1975, pp. 17-19).

g. The annual landfill volume increase (including cover soil) will be approximately 400,000 cubic yards.

h. After final elevations and final cover is applied, it will be possible to obtain surface runoff and reduce the leachate generation to 15 to 25 percent of the annual precipitation.

Although the above calculation is only an average, it does provide an adequate criterion upon which to base leachate management requirements because the leachate holding pond can store leachate if and when the annual generation exceeds the average.

2. COLLECTION

Proposed leachate collection system modifications include construction of a new leachate collection well in the area of the current landfill and several new leachate collection facilities in the proposed landfill. The new collection well proposed for the current landfill is located on Drawing No. 2.

The layout of the leachate collection system in the proposed landfill area is shown in Drawing No. 2 and system details are included on Drawing No. 4. Leachate Collection Sumps 1 and 3 will be located in Area 1. Leachate Collection Sump 1 will be constructed by first blasting the portion which does not extend into the existing leachate pond. After sufficient rock is removed to place the riser pipe base,

the rock will be replaced around the riser pipe. The rest of the leachate sump will be blasted when it is desired to hydraulically connect the existing leachate collection ponds with the new leachate sump. Leachate Collection Sumps 2 and 3 will be constructed in a similar manner, except that the entire blasting operation will be carried out at one time.

Leachate drains on the quarry floor will be blasted on the perimeter of Area 1 and in the interior as required to assure that drainage to the two leachate collection sumps is provided to all portions of Area 1. The leachate drains will be constructed by blasting the quarry floor and leaving the broken rock in place. The drains will have a minimum width of 6 feet. The perimeter drains will have depths as shown on Drawing No. 2, and the interior drains will be constructed to the depths required to assure drainage. The perimeter leachate drains will provide positive drainage ways for removal of leachate flowing down vertically along the quarry walls. These perimeter leachate drains will prevent leachate mounding near the quarry walls. Leachate levels in the collection sumps will be maintained below 20 feet.

In addition to the grout sealing of the jointed bedrock system in the northeast corner of Area 1 and the leachate drainage and collection system described above, several additional measures are proposed to ensure minimal inflow of groundwater into the proposed landfill Area 1 as well as to prevent leachate seepage out of the area into the groundwater. Two groundwater monitoring wells north of the grout seal

as shown on Drawing No. 3 will be used to monitor the groundwater level. The water level readings will be compared with those from Leachate Collection Sump 3 periodically to confirm that the leachate level is lower than the groundwater.

A 12-foot thick layer of compacted soil will be placed against the northeast wall. This layer will promote downward movement of leachate to Leachate Collection Sump 3 and provides a compacted soil liner to separate the solid waste and the fractured limestone quarry wall that has been grouted to control the seepage into the quarry. The limits of the compacted soil layer are shown on Drawing No. 2. The layer will be constructed in lifts just ahead of the solid waste lifts placed against it. Two representative samples were collected in regard to the suitability of local soils that are to be utilized to construct the soil layer. The attached laboratory test results (see Appendix A), indicate that more than 95 percent of the materials pass a No. 200 sieve size. Therefore, the material is composed primarily of silt and clay size particles which exhibit liquid limits in the range of 32 to 34 percent with a corresponding plastic index of approximately nine. According to the Unified Soil Classification System this material is classified as an inorganic, lean silty clay of low to medium plasticity. Standard Proctor tests indicate maximum unit dry densities in the range of 106 to 107 lb/cu ft with corresponding optimum moisture contents of 17 to 18 percent. Based upon these test results and our past experience with the utilization of loess soils, this material should provide an excellent soil layer for the intended design purposes when compacted using tracked

landfill equipment. The equipment will compact each eight-inch lift of soil by tracking over the entire lift surface at least twice.

Leachate collection in Area 2 will be accomplished using the drainage system initially constructed for surface water and the perimeter leachate drains shown on Drawing No. 2.

Three additional leachate containment measures which are incorporated in the design are chimney drains, a 4-foot soil layer placed against the quarry walls above elevation 430, and waste lifts sloping away from the quarry wall. The chimney drains will be constructed on 200-foot centers along the steep quarry wall to assure the downward movement of leachate and prevent mounding of leachate near the quarry wall. The chimney drain locations are shown on Drawing No. 2 and typical details are shown on Drawing No. 4. The drains will be constructed of 4-inch or larger waste rock with less than 10 percent fines (less than sand size particles) and will be loosely dumped against the quarry wall as the landfill lifts are advanced vertically. Chimney drains will have an effective horizontal area of approximately 16 square feet. Within 25 feet of the quarry walls, soil cover on each landfill lift will be removed prior to placing additional waste. This will promote leachate drainage at the landfill perimeter to the chimney drains (see Appendix B). Ten feet of final cover will be placed over the drains when the final cover is installed.

The 4-foot wide soil layer (See Drawing No. 4) will also be placed against the quarry wall to promote downward movement of leachate rather than lateral movement. The 430 elevation was established to ensure that the soil layer will extend below the weathered rock. This soil layer will be less permeable than the waste material in the landfill lift. This layer also will advance vertically with the landfill lifts. The soil will be dumped against the quarry wall and shaped without making a special compaction effort. At the quarry walls each lift will slope at 3-5 percent towards the center of the landfill for a minimum of 100 feet into the landfill. This construction will drain leachate away from the landfill boundary.

3. TREATMENT AND DISPOSAL

Leachate will be pumped from the three leachate sumps to the existing leachate treatment facilities. The leachate pumps will be submersible pumps capable of pumping flows of 100 gpm at total dynamic heads in excess of 300 feet.

The proposed leachate pretreatment system (see Figure II-1) includes pumping leachate from both the Area 1 and 2 sumps to the existing leachate holding lagoon. This lagoon has sufficient capacity for holding surge volumes of leachate produced during wet weather. The water then would be pumped to the aerated lagoons and through the rest of the system in the same manner as is currently practiced. As indicated by the testing results reported in PART I, the organic loading

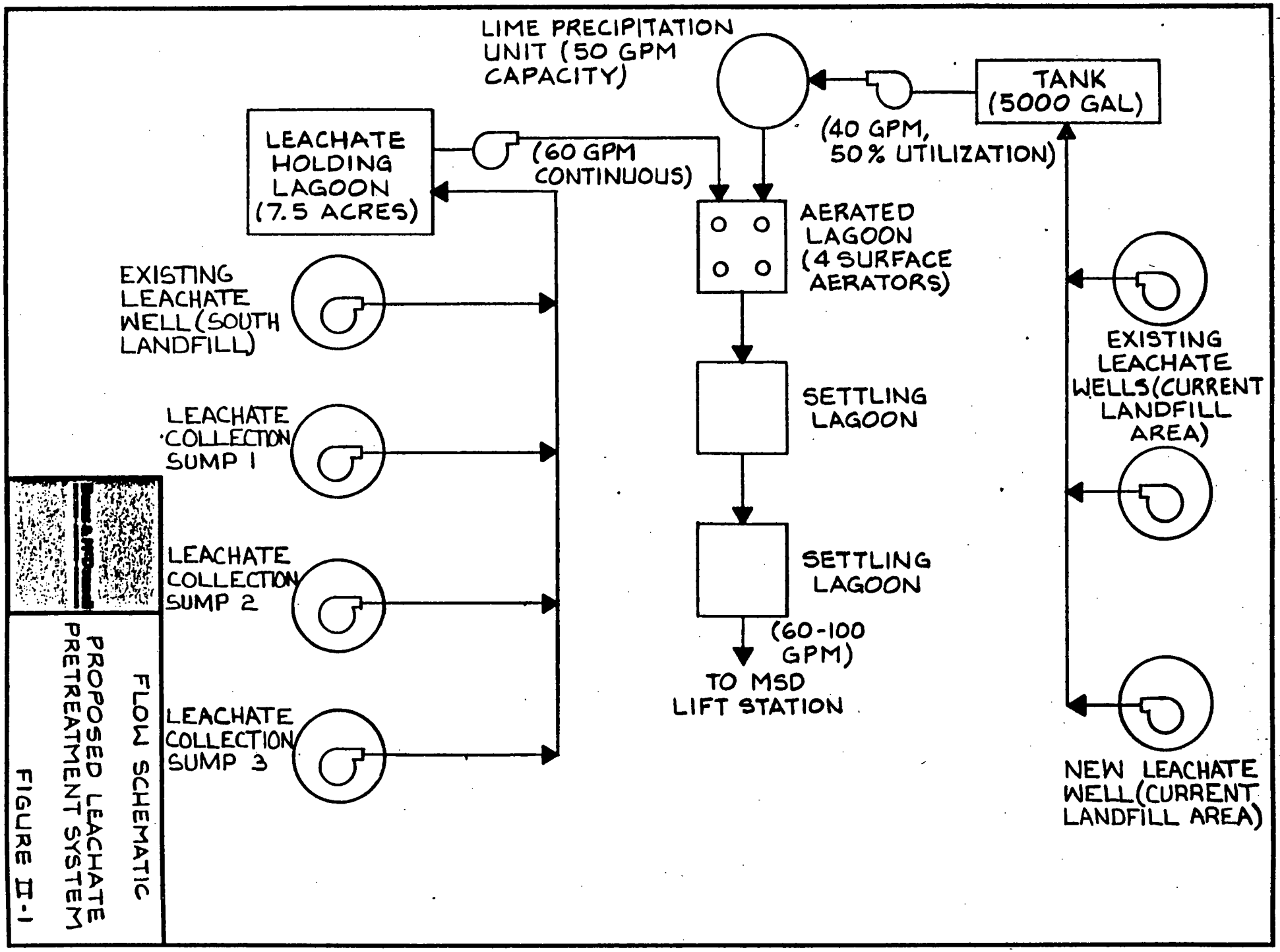

FLOW SCHEMATIC

PROPOSED LEACHATE PRETREATMENT SYSTEM

FIGURE II-1

of the West Lake discharge to MSD (sampled at 30 mg/l vs. 300 mg/l allowable) indicates that considerable additional organic treatment capacity is available. However, if actual operating data shows that additional aeration capacity is required, a curtain wall could be constructed and additional surface aerators installed in thn 7.5-acre holding lagoon.

The additional leachate would not be treated in the lime precipitation unit. This operational strategy is based on the fact that the current leachate holding lagoon effluent appears to meet the MSD effluent quality standard without requiring lime precipitation. Metals concentrations of a June 1984 grab sample of the leachate holding lagoon effluent and the most restrictive MSD standard (24-hour average) are shown below:

	MSD Allowable 24-Hour Average (mg/b)	7.5-Acre Holding Pond Effluent (mg/l)
Antimony	0.5	N.T.
Arsenic	0.5	0.007
Barium	10.0	<0.4
Beryllium	10.0	N.T.
Cadmium	0.1	<0.03
Chromium (total)	5.0	<0.1
Copper	1.6	<0.1
Iron	15.0	<0.1
Lead	0.2	<0.1
Mercury	0.03	<0.00 6
Nickel	2.0	<0.15
Selenium	0.2	<0.003
Silver	0.5	0.1
Zinc	3.0	N.T.

N.T. = Not Tested

If actual operating data shows that additional metals removal is required, one of the expansion area sumps or the existing South Landfill leachate collection well would be pumped to the lime precipitation unit. In fact, based on the current operating schedule of the lime precipitation unit, the additional annual capacity of the unit, assuming 90 percent availability, is in excess of 10,500,000 gallons per year. This capacity exceeds the expected annual increase in leachate production, indicating that the entire additional leachate production could be treated by the unit if required.

During the life of the site, the 5,000 gallon holding tank will require relocation due to the placement of additional solid waste fill in the area of its present location. The tank will be relocated either to a higher elevation near its present location or near the lime precipitation unit. The relocation details (timing and place) also will depend on the actual pretreatment operating experience, i.e. if and when additional leachate treatment in the lime precipitation unit is required. Leachate collection wells in the area of the current landfill also will be raised as waste is placed to higher elevations in this area. The leachate from this new leachate collection well will be pumped to the 5,000-gallon holding tank. A 50 gpm submersible pump with a total dynamic head in excess of 280 feet will be placed in this collection well.

4. CONTINGENCY PLAN

Comparison of Figures I-1 and II-1 show that the additional leachate treatment and discharge rate produced by the proposed landfill is expected to be approximately 20 gallons per minute, assuming no contribution of leachate by the grouted seep at the northeast corner of the proposed landfill. If the grouting and other groundwater intrusion prevention measures totally fail, this additional flow could approach 120 gallons per minute (100 gpm from the seep and 20 gpm from rainfall on the landfill). The contingency plan for this eventuality is discussed below.

First an effort would be made to regrout the groundwater seep to stop the flow into the landfill. Should the regrouting fail, a water well would be installed near the existing groundwater monitoring wells. This well would be pumped and discharged to the surface drainageway. Controls including water levels and water quality would be implemented to assure the water was not contaminated before discharge. The groundwater levels in the area of the seep would be reduced, thereby reducing seepage into the landfill. Leachate Collection Sump No. 3 has the capacity to handle the seepage should it occur.

Under this scenario, it is expected that the leachate would be of low strength and the lime precipitation unit would not be required to treat additional flows. Therefore, the only required modifications to the leachate treatment system would be possible up-sizing of some of the pumps.

With respect to disposal, the Metropolitan St. Louis Sewer District has confirmed that existing sewers have the capacity to carry an additional 150 gallons per minute (see Appendix C). In addition, during the 6-hour off-peak period 300 gallons per minute could be accepted. These capacities convert to a continuous additional leachate handling capability of approximately 190 gallons per minute. Thus, sufficient sewer capacity is available currently to handle the additional leachate production even assuming total failure of the grouting and other groundwater intrusion prevention measures to be performed at the northeast corner of the proposed landfill.

F. GAS CONTROL AND COLLECTION

A gas collection system has been designed for installation in the landfill expansion area to control potential migration of methane gas and odors. The layout of the gas collection system is shown on Drawing 3, and typical details are shown on Drawing No. 5. The laterals are spaced at approximately 40 feet vertically and 350 feet horizontally. The outer laterals will be placed within 100 feet from the quarry wall, and the highest laterals will be covered by a minimum of 40 feet of fill when final contours are achieved.

The advantage of the proposed lateral system is that it will be installed as the quarry is being filled. This allows venting the gas and flaring (burning) it from the partially completed landfill, an important factor considering the site's estimated life of 30 years. Flaring of the gas during the fill operation would be accomplished by mounting the flare cover

and covering the exposed portion of the riser pipe with soil. Based on current solid waste quantities, the cover soil would have to be removed and additional riser pipe added less than once per year.

The system is designed for natural venting, however, if this does not adequately control gas migration and odors, a vacuum blower will be installed to accelerate the removal of gas. The landfill gas will be burned as soon as a combustible quality of gas is produced in the collection system which is estimated to be within six months of constructing a landfill lift over the gas collecting laterals.

A gas monitoring system consisting of nine methane gas monitoring wells will be installed along the landfill boundary (see Drawing No. 3) to detect any movement of gas off the landfill property. Gas Wells G-2, G-8 and G-9 will be installed within six months of permit issuance. The other wells will be installed before the landfill reaches elevation 400 in the immediate area of the gas monitoring well.

The only modification to the existing gas control system will be to extend the riser pipes of the existing collection wells as additional solid waste is placed over the existing landfill.

* * * * *

PART III - SANITARY LANDFILL OPERATIONS

A. OPERATING HOURS AND ACCESS CONTROL

The landfill will be open to receive waste six days per week from 7 a.m. to 3:50 p.m. on Monday through Friday and 7 a.m. to 11 a.m. on Saturday. Access to the operation will be controlled by the entrance gates.

The sanitary landfill shall have posted signs which clearly indicate the purpose of the operation and prohibit trespassing for any purpose unrelated to the operation. Also the owner and operator of the site, hours of operation, types of waste accepted and/or excluded, and fees charged and emergency telephone numbers, shall be posted.

B. LANDFILL EQUIPMENT

The quantity of waste presently received at the operation is not expected to increase in the near future. Therefore the equipment which is currently in use will be adequate for the proposed expansion. If waste volumes increase, additional equipment will be provided as needed. The normal operation of this landfill requires one Caterpillar D-8 tractor full time and two 35-ton trucks and one 6-yard front end loader part time. The equipment currently available at the landfill includes the following:

1. HAUL UNITS (COVER MATERIAL)

1 - Caterpilar 35 ton truck
3 - Caterpillar 50 ton trucks
4 - Euclids 35 ton trucks

2. FRONT END LOADERS

1 - Michigan 11 yards
2 - Caterpillar 6 yards
1 - Caterpillar 7 yards
1 - Int. 125E 1.25 yards

3. BULLDOZERS

2 - Caterpillar D-8 Tractors
1 - Caterpillar D-9 Tractor

4. HAUL ROAD

1 - Caterpillar Road Grader
1 - Water truck

5. MISCELLANEOUS

Draglines - 1 Lima Model 1250, 1 North West #6
Pumps - (8 Size 8"-4")

Area equipment dealers have replacement equipment available for use on short notice (see letter in Appendix D).

C. COVER MATERIAL

The soil to be used for landfill cover material is located directly to the south of the present quarry operation, across Old St. Charles Rock Road. Future quarry operations will possibly be extended to this area (see Drawing No. 1). In any case, the soil overburden can be removed for landfill operations.

The soil to be used is a silty-clay loam. The USCS classification would either be ML or CL. This type of soil, applied to the working surface of

the landfill, will be effective in minimizing fire hazards, odors and blowing litter, and in providing a pleasing appearance.

Based on a total landfill volume of 13,000,000 cubic yards, approximately 2,600,000 cubic yards of soil will be required to provide cover at an overall 1 to 4 soil-to-refuse ratio. In order to provide this amount of soil, the cover material area (see Drawing No. 1) was divided roughly into quadrants with planned soil excavations as follows:

Quadrant	Approx Area (Ac)	Average Excavation Depth (ft)	Average Final Elev. (ft)	Soil Volume (yd^3)
NE	28.6	20	500	923,000
SE	18.0	27	550	784,000
SW	17.1	16	454	441,000
NW	10.5	30	454	508,000
Totals	74.2	--	---	2,656,000

If additional cover material is found to be necessary, considerable additional cover material can be excavated on the east side of the cover material area since the rock elevation throughout the area is expected to be approximately 454.

D. DAILY, INTERMEDIATE AND FINAL COVER OPERATIONS

Daily cover will be applied regardless of weather. The minimum thickness of the compacted daily cover will be 6 inches. Intermediate soil cover will not be used after completion of Phase 1 of Area I because it may retard the moment of precipitation down into the solid waste. The lateral gas control system will be used to control odors. Therefore, the use of intermediate

cover is unnecessary and actually interferes with the landfilling system proposed for this facility. Intermediate cover and surface grading will be used once the landfill reaches an elevation that surface water can be drained to the natural ground surface. This intermediate cover will be removed prior to constructing a landfill cell over a lift that has received intermediate cover.

When the fill reaches the final elevation, final soil cover will be applied as the final lift is established. This final cover will consist of 3 feet of silty-clay loam soil.

Because of the landfill depth (250 ft), there will be a considerable amount of settling, although much of this settlement will take place prior to landfill completion. The final proposed contours have surface grades of 5 percent and side slopes of 25 to 33 percent. This will minimize necessary regrading from future landfill settlement.

The final cover will be graded, limed, and fertilized as needed and then seeded with native grasses to control erosion. The surface grades and vegetation will be maintained as needed to prevent ponding and enhance runoff and evapotranspiration.

E. LITTER CONTROL

Because of the nature of a quarry operation, blowing litter should not be a factor for most of the life of the landfill. All but the last few lifts of the landfill operation will be conducted in a recessed setting which will be a protected area against windy conditions. During operation of the last few lifts of the landfill, it will be necessary to utilize temporary or portable litter fences to aid in litter control. All litter will be collected and incorporated into the working face at the end of each working day.

F. VECTOR CONTROL

Utilization of proper operating procedures should prevent any problems with vectors. However, if a vector problem should arise, an assessment will be made of the operating conditions to see what conditions are being maintained that are favorable for the existence of the vectors and necessary corrective action taken. A professional exterminator will be retained to assist in the actual eradication process.

G. DUST CONTROL

Dust control at the sanitary landfill is minor compared to dust control of the overall quarry operation. A dust control program is already in effect for the quarry operation and dust control for the sanitary landfill will be part of this program. The major dust concern at the sanitary landfill is from the access roads, most of which are shared with the access roads of the quarry operation. Dust control on these roads is provided by application of water on the roads on an as-needed basis, by the use of a water truck.

H. SAFETY PROGRAM

Safety considerations consist of fire control, dust control access control and communication equipment.

Protection against fires shall include providing fire extinguishers on the landfill equipment. In addition, the operator will be on the alert for any indication that a load may be smoldering and about to ignite. If a smoking or smoldering load is observed, the solid waste should immediately be pushed away from the active working face and spread out as much as possible. A thick layer of soil should then be spread over the solid waste and compacted to effectively smother the fire. The sealed solid waste should be observed for several days and, if any signs of smoke appears, more soil should be spread and compacted over the solid waste. It may be necessary to leave the "hot" solid waste sealed for several days, to a week or more, before incorporating it into the active working face. If an obvious "hot load" should arrive, the truck should immediately be routed to an area away from the working face and the previously described procedure employed.

If an area of the daily cell should ignite or show signs of smoldering, a large enough area of the cell should be excavated to ensure that all of the hot material has been excavated and to allow a margin of safety for the operator. The excavated solid waste should be pushed as far from the active working face as possible and sealed as previously explained.

Access to the site will be limited to the posted hours, as previously stated. No scavenging will be permitted.

A telephone is provided in the landfill office to contact emergency services and agencies. Pickup trucks operated by supervisors are equipped with two-way radios to the office.

The dust control program is described in the previous section.

I. MONITORING

The monitoring program will include sampling gas, leachate and surface water drainage sampling. All analyses will be performed by private laboratories.

The gas monitoring wells will be sampled quarterly starting just after their installation. Gas samples will be analyzed for explosive gas concentrations and these concentrations will be compared with the lower explosive limit of the gas.

Pretreated leachate discharged to the MSD sanitary sewer system will be monitored semiannually for: pH, BOD, antimony, arsenic, barium, beryllium, cadmium, chromium (total), copper, iron, lead, mercury, nickel, selenium, silver and zinc.

Surface water pumped from the quarry during the initial landfill years will be monitored in accordance with an NPDES permit.

J. RECORD KEEPING

Records will be maintained on a daily basis consisting of the following information:

1. Major operational problems, complaints or difficulties.
2. Cover material operations.
3. Vector control efforts.
4. Dust and litter control efforts.
5. The estimated quantity of solid waste received on each calendar day.

The results of gas monitoring and analysis of leachate treatment efficiencies shall be recorded and maintained.

K. CLOSURE

Final soil cover and seeding of the landfill surface will be accomplished as previously noted. Maintenance of the surface will be provided by filling settled areas with soil and reseeding to maintain proper surface drainage. The surface drainage system, leachate management system, and gas collection and monitoring system will continue to be maintained by the landfill operator as required. These systems will be maintained for at least 20 years after the closure of the landfill.

Upon closing of the sanitary landfill, an engineering drawing showing the location, type and approximate depth of the landfilled waste will be

recorded with the St. Louis County recorder of deeds. The location and necessary maintenance of the leachate management system and gas control system will be noted on the drawing recorded.

* * * * *

PART IV

POST-CLOSURE PLAN

A. PERIOD

A definitive post-closure care period has not been established. Some parts of the post-closure care program may continue longer than others since it is proposed to continue each until it is shown to be unnecessary. Therefore, it is proposed to provide a perpetual care fund, that is, the annual interest earned by the fund would pay the annual post-closure care program costs indefinitely.

B. PROGRAM

The post-closure care program will consist of:

- o Site inspection for cracks, erosion, and reestablishment of vegetation (and corrective actions as required),
- o Landfill gas removal and utilization,
- o Leachate removal, treatment, and discharge to a sanitary sewer, and
- o Record keeping.

1. SITE INSPECTION

The site will be inspected quarterly for cracks, erosion and vegetation establishment. The inspections will be accomplished by walking the site and recording problems and their locations. Corrective action will be taken immediately to correct the problems.

2. LANDFILL GAS REMOVAL AND UTILIZATION

The landfill will be constructed with gas collection facilities. It is expected that by the time the post-closure care program begins the gas will be burned on site to generate electricity. The electricity will, in turn, be used to power on-site equipment and possibly for commercial sale. The on-site generation will require daily attendance.

3. LEACHATE REMOVAL, TREATMENT AND DISCHARGE TO A SANITARY SEWER

Leachate will continue to be removed from the site during the post-closure period. The operation of the leachate treatment and discharge facilities will continue to be essentially the same as the operations carried on during active placement of refuse in the landfill. These operations were discussed in PART II.

Although somewhat less than 100 gallons per minute of leachate is expected, a conservative value of 200 gallons per minute was assumed for preparing the cost estimate. At this leachate removal rate, it is expected that most of the flow will not require treatment in the lime precipitation unit in order to meet the Metropolitan St. Louis Sewer District's (MSD's) pretreatment discharge limits. The discharge will be monitored quarterly for the following parameters to ensure compliance with MSD's pretreatment standards:

pH
BOD
COD
Antimony
Arsenic
Barium
Beryllium
Cadmium
Chromium (total)
Copper
Lead
Mercury
Nickel
Silenium
Silver
Zinc
Iron

4. RECORD KEEPING

All inspection reports, work orders, invoices, and test results generated by the post-closure care program will be kept on file by Westlake Landfill, Inc., or the successor firm hired to carry out the program.

C. COSTS

The annual post-closure care cost (1985 dollars) is estimated to be $65,100. This cost includes site inspections, final cover repair, seeding repair, leachate treatment and discharge to the sanitary sewer, leachate monitoring, and record keeping. The cost of operating the gas collection system will be paid by the recovery of energy from burning the gas. The recovered gas also will be used to generate electric energy to operate the pumps for leachate collection, treatment and discharge.

A breakdown of the estimated costs is as follows:

Item	Cost
Site Inspection: 4 times/year and 8 hours/inspection at $25/hour	$ 800
Final Cover Repair 1.65 acres/year x 1 foot x 1,613 cubic yards/acre-foot x $2.00/cubic yard.	$ 5,300
Seeding Repair 3.3 acres/year @ $1250/acre	4,100
Leachate Treatment 21 million gallons/yr @ $210/million gallons	4,400
Leachate Disposal 105 million gallons/yr @ $0.26/100 cubic feet	36,000
Leachate Monitoring 4 analyses/year @ $350/analysis	1,400
Record Keeping 20 hours/year @ $25/hour	500
Total	$65,100

D. ESCROW REQUIREMENTS

Annual escrow account contributions to provide a perpetual care fund were estimated assuming the following:

- Annual payments into fund over 20 years.
- Fund accrues interest at a constant dollar interest rate of 5 percent. (A constant dollar interst rate is a measure of the real time value of money neglecting inflation effects. However, in terms of actual cash flow, inflation of annual costs is accounted for by the difference between the actual interest rate and the constant dollar interest rate.)

- Annual constant dollar interest required during post-closure is $65,100.
- Required escrow fund = $65,100/.05 = $1,302,000, and
- Required annual contribution = $1,302,000 x .03024 (sinking fund factor, 20 yrs, 5%) = $39,372

Therefore, $40,000 per year will be placed in an escrow account for the first 20 years of the landfill life. At the end of the twenty-first year and every year end thereafter, 5 percent of the end-of-year escrow fund balance will be withdrawn to pay for post-closure care during that year. In order to maintain the perpetual care fund, this constant percentage will be withdrawn each year. If actual post-closure care costs during the year are greater than the fund withdrawal, the Owner will pay for the difference with other funds. Likewise, if actual costs are less than the withdrawal amount, the excess withdrawal funds will accrue to the Owner.

* * * * * *

APPENDIX A

SOILS ANALYSES

GROUTING METHODOLOGY

Prior to grouting a specially constructed cementing head complete with pressure gage and safety valve was affixed to the 6" I.D. steel surface casing.

Injection of grout was completed utilizing a positive displacement type pump with maximum of capacities of 87 GPM @ 600 PSI.

Grout was initially introduced at gravity pressures until formation resistance required positive pressure for penetration. Generally grout was continuously pumped until high pressures caused stalling of the pump or loss of grout from the face required staging techniques.

For specific pumping proceedures please review the attached "Daily Reports Appendix "A".

GROUT MIX DESIGN

All grout was mixed and supplied by Westlake Ready Mix Company.

Water ratios were continually adjusted to achieve maximum penetration and varied from 7 to 12 gallons per sack. When applicable, "Intraplast-N" was added to inhance penetration and to compensate for shrinkage. "Cella-Seal" (lost circulation material) was also added to reduce grout loss from the spring adit. In some cases the formation was open enough to allow sand to be added but generally addition of sand caused holes to slug off.

A total of approximately 8,428 sacks of cement and 1,580 cubic feet of sand was injected in grout curtain #2. Due to varying water ratios it is difficult to compute total take in cubic yards of slurry. Our estimated total slurry volume is 600 cubic yards.

GROUTING PROGRAM STATISTICS

TOTAL NUMBER OF HOLES DRILLED . . .	26
TOTAL NUMBER OF HOLES REDRILLED . .	5
TOTAL FOOTAGE DRILLED	7,750 L.F.
TOTAL SURFACE CASING SET	1,861 L.F.
TOTAL ROCK SECTION DRILLED	5,888 L.F.
TOTAL GROUT PLACED	600 CU. YDS. ±
GROUT PLACED PER L.F. OF OPEN FORMATION DRILLED .	.10 CU. YDS./L.F. OR 2.7 CU. FT./L.F.
WATER LEAKAGE AT BEGINNING OF PROJECT .	100 GPM
WATER LEAKAGE AT CONCLUSION OF PROJECT .	0 GPM
COLLAR ELEVATION OF GROUT HOLES . .	479' ±
BOTTOM ELEVATION OF GROUT HOLES . .	229' ±

LAI 0153

REITZ & JENS, Inc. • 1040 North Lindbergh Boulevard • St. Louis, Missouri 63132 • 314 993-4132

CONSULTING ENGINEERS

June 15, 1981

Mr. Mike Duvall
St. Louis Office, Mo. DNR
8460 Watson Rd.
St. Louis, MO 63119

Re: West Lake Landfill
Black Diamond Lake Extension

Dear Mr. Duvall:

This summarizes the status of work for preparation of the landfill extension over the Black Diamond Lake area of West Lake Landfill.

1. The drill rig began drilling the monitoring wells Friday, June 12; the third well should be completed today. Water samples will be taken from each well for testing to obtain background water analysis for the complete list of parameters you requested.

2. The replacement pumps for the MSD lift station are scheduled for delivery at the end of June. This will increase lift station capacity from 80 gpm to 150 gpm and thereby, allow West Lake Treatment Plant to increase output to MSD.

3. The pump for the landfill collection well is scheduled for delivery in two weeks.

4. Excavation and construction of the holding lagoon is underway. The 20 mil PVC membrane liner is scheduled for delivery by June 22.

5. The gas burner should be back in operation within a week.

6. Enclosed, for your review and comments, is a copy of a topographic map of a section of West Lake Quarry showing the landfill area around Black Diamond Lake with the proposed roadway for trucks to get to the landfilling operation. Please note that dashed lines show the boundary of the 3 to 1 earth slope area within the quarry hole. We would like to meet with you on-site to review the proposed roadway prior to finalizing submittal of plans to your office.

This summarizes progress to date. If you have any questions, please call.

Very truly yours,

David E. Murray

DAVID E. MURRAY

Encl.
DEM/rs
cc: West Lake Quarry
T. Ellis

LAI 0154

MISSOURI DEPARTMENT OF NATURAL RESOURCES
8460 Watson Road St. Louis, Missouri 63119 (314) 849-1313

3.600 St. Louis County
West Lake Sanitary Landfill

June 17, 1981

Mr. William J. McCullough
President
West Lake Landfill, Incorporated
13570 St. Charles Rock Road
Bridgeton, Missouri 63044

Dear Mr. McCullough:

This will acknowledge our review of the proposal for design and construction of a holding lagoon, to facilitate storage on a temporary basis of leachates generated at the West Lake Sanitary Landfill. The proposal is as outlined in the letter of June 8, 1981 to this office from your consulting engineer, Reitz and Jens, Incorporated.

Based upon staff review of the information submitted by the consultant, and on-site meetings with West Lake personnel and the project engineer, we wish to advise that we are in agreement with this concept, provided that construction of the basin and appurtenances is in accordance with the recommendations of our Division of Geology and Land Survey.

We will check the holding basin for conformance with the design information submitted, along with all features of the leachate management system, in the course of our regular inspections of the landfill.

Sincerely,

Mike Duvall

Mike Duvall
Environmental Specialist II
St.Louis Regional Office
Department of Natural Resources

MD/jk

CC: Dave Murray, Reitz and Jens, Incorporated
Bryan Pearl, City of Bridgeton
St. Louis County Department of Community Health and Medical Care
Tom Dean, Division of Geology and Land Survey
Central Office, Solid Waste Management Program

Christopher S. Bond Governor
Fred A. Lafser Director
St. Louis Regional Office

LAI 0155

E 15.01 — 12/75

9

DEPARTMENT OF NATURAL RESOURCES

Division of Environmental Quality
P.O. Box 1368
Jefferson City, Missouri 65101

APPLICATION FOR OPERATING PERMIT

Solid waste disposal area or solid waste processing facility: (check only one)

- [x] Sanitary landfill
- [ ] Incinerator
- [ ] Compost plant
- [ ] Demolition landfill
- [ ] Transfer station
- [ ] Resource recovery plant
- [ ] Other (specify) _____

Name of Area or Facility: West Lake Landfill, Inc.

Location: City: Bridgeton County: St. Louis

U.S. Survey 131 ____ 1/4 ____ 1/4 ____ 1/4, Section ____ Township 47N Range 5E

Brief description of area or facility for which application for permit is made: (such as size or capacity) This 9 acre expansion area is comprised of a 3 acre pit and 6 acres of the sloping southeast side of recently filled area under Permit No. 118906.

Check type of waste proposed to be accepted:

- [x] Municipal solid waste
- [ ] Bulky waste
- [ ] Dead animals
- [ ] Incinerator residue
- [x] Demolition and construction waste
- [ ] Brush and untreated wood waste
- [ ] Septic tank pumpings
- [ ] Wastewater treatment plant sludges
- [ ] Other sludges (specify) _____
- [ ] Liquids (specify) _____
- [ ] Industrial process waste (specify) _____
- [ ] Hazardous wastes (specify) _____
- [ ] Other waste (specify) _____

Registered engineer or consulting engineering firm submitting plans:

Name: Reitz & Jens, Inc. Phone: 993-4132
Address: 1040 North Lindbergh Blvd.
City: St Louis State: MO Zip Code: 63132

OPERATOR: (Person principally responsible for the operation.)
Name: William J. McCullough Phone: (314) 739-1122
Address: 13570 St. Charles Rock Road
City: Bridgeton State: Missouri Zip Code: 63044

OWNER: (Legal owner of land or facility if different than operator.)
Name: _____ Phone: _____
Address: _____
City: _____ State: _____ Zip Code: _____

If granted this permit, we the undersigned, agree to abide by the rules, regulations, orders and decisions of the Missouri Department of Natural Resources. We understand that in the event of any false or fraudulent information in the application, plans and data, or of failure to operate the area or facility in a proper and legal manner, the permit may be revoked after due notice from the Missouri Department of Natural Resources. We understand the permit is not transferable.

Wm J McCullough President — SIGNATURE OF OPERATOR
June 26, 1981 — DATE

SIGNATURE OF OWNER _____ DATE _____

LAI 0156

MEMORANDUM REPORT

Proposed Expansion of West Lake Landfill, Inc.

Sanitary Landfill Operation

Bridgeton, Mo.

June 26, 1981

REITZ & JENS, INC.
Consulting Engineers
1040 N. Lindbergh Blvd.
St. Louis, MO 63132

INDEX

TITLE	PAGE NO.
Location	1
Geology	1
Flood Potential	1
Plan of Operation	1
Area Preparation	2
Method of Operation	2
Haul Road	3
Clay Liner	3
Leachate Collection and Disposal	4
Dust Control	4
Litter Control	4
Cover Material	4
Final Cover	4
Equipment	4
Fire Protection	4
Security	4
Vector Control	4
Air Curtain Burner	5
Operating Hours	5
Wastes Not Accepted	5
Gas Migration/Control	5
Landfill Life	5

MEMORANDUM REPORT

Extension of West Lake Sanitary Landfill Operations

Bridgeton, Mo.

June 1981

This engineering memorandum report is for an expansion of the West Lake Landfill operations in Bridgeton, Mo. This 9-acre expansion area is located in U.S. Survey 131, T47N, R5E (see Plan Sheet 1). The proposed site adjoins and is partially over the southeast side slope of the landfilled portion of Permit Area No. 118906 where operations were completed during April 1981. A pit, called Black Diamond Lake, comprises three of the 9 acres of the total expansion area; the other 6 acres are the sloping southeast side of the recently filled area under Permit No. 118906.

GEOLOGY

This quarry is in the St. Louis and Salem Formations. Bedding in the northeast and southeast vertical rock faces of the pit is quite tight. The watertightness of these walls becomes obvious when one visually inspects the color tones of the exposed quarry face for either wetness in warm weather or icicles in subfreezing weather. This unusual tightness has been observed over the past several years. The limestone pit bottom has held water satisfactorily over the past two years of this consultant's active involvement.

The northwest wall up to at least elevation 360 is intact limestone bedrock that has not been quarried. This wall is continuous from not only the north projection along the "expansion area" but also southwesterly completely enclosing the perimeter of the active quarry.

FLOOD POTENTIAL

West Lake Quarry is protected by the Earth City Levee with top elevation 463±. The 100-year flood elevation at River Mile 31 is 457.1. This is adequate protection against the Missouri River 100-year flood.

PLAN OF OPERATION

West Lake landfilling is presently operating on a 6+acre portion (Permit No. 118908) about 1500 feet west of the proposed area. The present landfilling area should be filled up within 6 to 8 weeks.

It is recommended that the expansion area be prepared as soon as possible to accomodate the daily volume (3,500 cubic yards) in an orderly fashion to phase out the present landfilling operation of Permit No. 118908 without loss of continuity for this disposal corporation. Filling can then be directed between the existing landfill and the expansion area as needs dictate during its closing phase. As

existing landfill (Permit No. 118908) is completed and final cover applied, filling can continue without interruption in the 9-acre expansion area which will fill in the 3-acre pit and also the sloping east side of the recently filled area under Permit No. 118906.

The proposed expansion of landfilling operations will eliminate the pit nuisance, provide an additional 1.3 million cubic yards of air space volume sorely needed for refuse disposal in St. Louis County, and provide a better reclamation plan for Permit No. 118906 than the original sloping surface into the deep pit.

AREA PREPARATION

The proposed plan calls for landfilling the pit (Black Diamond Lake) as soon as leachate can be pumped out and contained in a temporary holding lagoon awaiting processing through the West Lake Treatment Plant. This lagoon, now under construction, is in an area south of the landfill and west of old St. Charles Rock Rd. The plan will provide storage capacity in excess of the 30 million gallons presently pooled in Black Diamond Lake.

After the 3-acre pit is pumped, the bottom will be covered with 10 feet of quarry-run limestone. A new observation and collection well will be constructed in the north corner of the pit. The 10-foot depth of quarry-run limestone will be covered with a 4 to 10-foot earth cover with the 4-foot depth around the collection well then sloping upward to the 10-foot depth at the other side of the pit. The top of the 4-foot diameter RCP well will be incrementally raised as the landfilling progresses in the pit (see drawing for details).

It is realized that the important thing is to pump leachate from the landfill collection well in Permit Area No. 118906 to the treatment plant to lower the water level so it will stop entering Black Diamond Lake. In addition to continuous pumping of leachate from this landfill collection well, a second pump will be used to simultaneously pump leachate from the holding lagoon to the treatment plant. The treatment plant presently is operating satisfactorily at a rate of 70 gpm and discharges into a MSD lift station that has a 80-gpm pump. West Lake is purchasing two 150-gpm replacements for the lift station, scheduled to be installed by MSD in late July of this year.

METHOD OF OPERATION

Refuse trucks will enter the main entrance gate on St. Charles Rock Rd. and proceed southwestwardly to the landfill ticket office; then eastwardly, down the all-weather haul road to the bottom of the pit. Landfilling will start at the north corner of the pit near the collection well, then in a southwardly direction back out toward the haul road. Trucks will dump near the working face. The refuse

[illegible] by the dozer in two-foot lifts and compacted in working strips [illegible] 100 feet wide (compacted by tracking over each lift several times). [illegible] the working face will be maintained to keep a ratio of at least 3H to [illegible] daily cover of 6 inches will be applied each day. An adequate supply [illegible] material will be available in the pit or adjacent to it.

[illegible] is filling and landfilling proceeds up the east slope of Permit [illegible], the final cover over the old landfill area should not be removed [illegible] landfill is extended over that portion. As the landfilling operation [illegible] tion, filling should be controlled to work the surface toward final [illegible] in Sheet 2) with a maximum slope of 3 to 1 but no flatter than 3% to [illegible] tration.

[illegible] ns of the landfill are brought to final grade and two-foot final [illegible] it should be seeded, fertilized and mulched as soon as practical.

[illegible] of the new haul road is shown on Plan Sheet 1. The road will be a [illegible] feet wide and at least 35 feet wide on curves. A small "V" ditch [illegible] the road will handle drainage. Maximum grade will be limited to [illegible] when not in cut rock, will be 12-inch thick crushed limestone. The [illegible] the road will be on fill, rock-filled embankment at a 1.5 to 1 maximum [illegible] 6 feet wide and 3 feet high will be constructed between the road [illegible] side edge of the embankment (see drawing for details).

[illegible] surface runoff from the beginning of the haul road at the maintenance [illegible] first 600 feet) will be carried to the rock holding basin just north of [illegible] and ready-mix plant. This holding basin already handles runoff from [illegible] and ready-mix plant and prevents it from entering the landfill. The [illegible] pumped out and over to the holding basin at the concrete plant.

[illegible] vertical rock faces of the northeast and southeast sides of the pit and [illegible] rock fill of the haul road should be lined with compacted clay zone [illegible] 4-foot width of fill against the rock face. This can be dumped [illegible], spread to about 8-inch depth with the dozer and compacted by the [illegible] of the dump trucks. It is essential that the clay liner be kept at [illegible] feet above elevation of the refuse being landfilled to ensure that the [illegible] separate the refuse from the rock face.

LEACHATE COLLECTION AND DISPOSAL

Leachate will be pumped out of the collection well in landfill Permit Area No. 118906 and up to the treatment plant on top of the hill. The water level in the new collection well in the 3-acre pit will be checked monthly and recorded. The well will be pumped when the water level rises to at least 9 feet from the bottom and processed through the treatment plant.

DUST CONTROL

The roadway from the entrance gate to landfilling operations will be watered by sprinkler truck, as required, to keep dust down.

LITTER CONTROL

Temporary litter fences will be used around the active landfill area to control blowing paper which will be removed from the fence daily.

COVER MATERIAL

There is an abundance of cover material available on the 80+ acre quarry property just south of old St. Charles Rock Rd. It will be hauled over and stock-piled at the landfill site as required.

FINAL COVER

Final cover will not be less than two feet thick. When an area is brought to final grade and final cover applied, it will be seeded, fertilized and mulched to promote vegetation and minimize erosion. Final slopes will not exceed 33% but not flatter than 3% to minimize infiltration.

EQUIPMENT

Two Caterpillar D-8 Dozers; one Lima 1250 Dragline; two 35-ton Euclid End-Dumps; one water sprinkler truck. Substitute equipment includes dozers, front-end loaders and Euclid End-dumps which are available from the adjacent quarry operation.

FIRE PROTECTION

A fire extinguisher is provided on each piece of equipment used at the landfill. Fire protection is furnished by the Pattonville Fire Protection District and the operator.

SECURITY

The quarry property is fenced to control access. Access is only through gates locked when the quarry is closed. A watchman is on duty every night and weekends.

VECTOR CONTROL

Present vector control program, approved by the St. Louis County Health Department, will be continued in the landfill expansion area. Scavenging and open burning will not be permitted in the expansion area.

AIR CURTAIN BURNER

The air curtain burner, located in the back southwest corner of the property, will continue to operate separately under the St. Louis County Air Pollution Control Permit for appropriate combustible solid wastes.

OPERATING HOURS

The landfill will be open from 7:00 AM to 4:00 PM on weekdays and from 7:00 AM to 12:00 noon on Saturday.

WASTES NOT ACCEPTED

A sign is posted at the entrance listing the wastes that will not be accepted for disposal. It reads: "The following waste materials will not be accepted for bulk disposal: hazardous wastes, bulk liquids, semi-solids, sludges containing free moisture, highly flammable or volatile substances, unexpended pesticide containers, pesticides, raw animal manure, septic tank pumpings, raw sewage sludge and industrial process sludge, radioactive materials and explosives".

GAS MIGRATION/CONTROL

Lateral migration of decomposition gases should not be a problem in the expansion area. Over one-half of the expansion perimeter is bounded by the old landfill.

Two gas control systems will be used in this expansion area: (1) barrier system; and (2) passive ventilation system.

The clay liner on the outside rock wall of the pit acts as a barrier. An open rock gas collector will be placed along the outside walls of the pit to collect decomposition gases (see drawing for details). This should minimize the possibility of horizontal migration.

In addition to the above, a gas burner has been in operation since early May. This burner, installed for odor control, is effectively burning off decomposition gases coming from the southeast side of the landfill, along Taussig Rd.

Meanwhile, if gas migration would become a problem, drilling down to the open rock gas collector would provide the venting necessary. This could then be connected to the gas burner operating on top of the north corner of the 3-acre pit.

Consideration is now being given to a gas recovery system with extraction wells and collection system.

LANDFILL LIFE

The landfill is presently receiving about 3,500 cubic yards per day. The present landfilling in Permit Area No. 118908 should be completely filled within 6 to 8 weeks.

The landfill expansion area has a volume of about 1.3 million cubic yards. Final cover will require less than 50,000 cubic yards. This leaves a net capacity for refuse and daily cover of 1.25 million cubic yards.

2

MISSOURI DEPARTMENT OF NATURAL RESOURCES
P.O. Box 1368 1915 Southridge Drive Jefferson City, Missouri 65102 (314) 751-3241

August 21, 1981

William J. McCullough
13570 St. Charles Rock Road
Bridgeton, MO 63044

Dear Mr. McCullough:

Enclosed is your official "Solid Waste Disposal Area Operating Permit", which I believe is self-explanatory. Also enclosed is copy of the "Report of Approval of Plans and Specifications for Solid Waste Disposal Area, St. Louis County, Missouri", dated August 13, 1981, which is made a part of the description and conditions of this permit.

If you have any questions, please advise.

Sincerely,

John D. Doyle

John D. Doyle, P.E., Chief
Technical Services Section
Solid Waste Management Program

JD/bki

Enclosures

cc: East-West Gateway Coordinating Council
St. Louis Regional Office
Reitz & Jens, Inc.

Christopher S. Bond Governor
Fred A. Lafser Director

Division of Environmental Quality
Robert J. Schreiber Jr., P.E. Director

LAI 0157

MISSOURI DEPARTMENT OF NATURAL RESOURCES
Division of Environmental Quality
Solid Waste Management Program

SOLID WASTE DISPOSAL AREA OPERATING PERMIT

In accordance with Section 260.205, Paragraph 2, RSMo, Supplement 1973, the Missouri Department of Natural Resources hereby approves the application and issues Permit Number 118909 to William J. McCullough for the operation of a solid waste disposal area set forth in the application as the West Lake Landfill, Inc. located in the U.S. Survey 131 Township 47N Range 5E St. Louis County, Missouri. This permit applies only to that tract of land of approximately acres covered by the engineering plans, specifications and operating procedures submitted to the Department.

Operation of this solid waste disposal area shall be in accordance with the provisions of the Missouri Solid Waste Management Law (Sections 260.200 to 260.245, RSMo, Supplement 1973), the rules and regulations promulgated thereunder, and the engineering plans, specifications and operating procedures approved by the Department. The Department does not examine structural features of design or efficiency of mechanical equipment and the issuance of this permit does not imply approval of those features.

The Department reserves the right to revoke or modify this permit after due notice if it is found that the holder of the permit is in violation of the Missouri Solid Waste Management Law, the Missouri Solid Waste Rules and Regulations, or failure to operate in accordance with the approved plans, specifications and operating procedures or is creating a public nuisance, health hazard or environmental pollution. Furthermore, if it is found that additional construction or alteration of the solid waste disposal area is necessary to comply with any and all rules and regulations promulgated in accordance with the Missouri Solid Waste Management Law, then, and in that event, the Department has and does hereby reserve the right to revoke or modify this permit.

This permit for operation of a solid waste disposal area is issued only to the person named in the application and shall not be transferable. This permit shall become void after notice to the Department by the person named in the permit that said person has discontinued operation of the disposal area. The Department may revoke this permit after determining an area has not operated for a period of one year. This permit is issued contingent upon and may be revoked for failure to comply with any and all conditions described on the attached "Report of Approval of Plans and Specifications for Solid Waste Disposal Area."

By _____
DIRECTOR, DEPARTMENT OF NATURAL RESOURCES

Date August 20, 1981

2

REPORT OF APPROVAL OF PLANS AND SPECIFICATIONS
FOR SOLID WASTE DISPOSAL AREA
ST. LOUIS COUNTY, MISSOURI

August 13, 1981

INTRODUCTION

An application for Operating Permit has been filed with the Missouri Department of Natural Resources requesting a permit to operate a sanitary landfill designated in the application as the West Lake Landfill, Inc. - 3 acre expansion. The application was filed by William J. McCullough, President. Plans, specifications and operating procedures for the West Lake Landfill, Inc. St. Louis County, Missouri, have been submitted to the Department of Natural Resources, Solid Waste Management Program, for review and approval by Reitz and Sons, Inc. These plans, specifications and operating procedures have been reviewed for compliance with the Missouri Solid Waste Management Law (Sections 260.200 to 260.245, RSMo., Cum. Supp. 1978) and the Missouri Solid Waste Rules and Regulations.

BRIEF DESCRIPTION

The proposed sanitary landfill expansion is located in U.S. Survey 131, Township 47N, Range 5E, St. Louis County, Missouri. The proposed site consists of a total of approximately 3 additional acres of quarry which will be utilized for sanitary landfill. Final fill elevations on the adjacent previously permitted (#118906) 6 acre fill area have also been revised. The types of wastes to be accepted will consist of municipal solid waste and demolition and construction waste. Approval to dispose of special wastes other than the wastes listed above (except hazardous waste, explosives or radioactive material) will be considered on a case-by-case basis, as provided in 10 CSR 80-3.010 (3). The area method of sanitary landfill operation will be utilized. Upon completion of the landfill, the area will receive final cover, grading and seeding.

All fencing, gates, equipment maintenance buildings, all-weather access roads, signs, surface-water control devices, operating equipment, standby equipment and other necessary appurtenances shall be provided as per the approved plans, specifications and operating procedures.

CONDITION(S)

The following condition(s) are an integral part of the permit. Compliance with these condition(s) shall, in part, determine compliance with the permit.

1. An eight foot wide clay liner is to be installed along the vertical rock faces of the northeast and southeast sides of the quarry pit. Records substantiating liner construction and installation shall be kept.

2. Prior to use of the quarry pit for landfilling, the accumulated leachate in the pit shall be completely pumped out to the temporary holding lagoon which has been constructed southwest of the quarry property. After the

LAI 0158

leachate has been pumped out of the pit, 10 feet of quarry run limestone will be placed in the pit bottom. This layer will be covered by a 4 to 10 foot thick earth blanket. A collection well in the pit will be installed in conjunction with the installation of the quarry run limestone and earth blanket layers. The collection well in the new pit shall be used to pump leachate out of the pit to the leachate treatment plant such that the leachate level never rises above 8 feet from the pit bottom. Leachate level is to be maintained at least two feet below the top of the 10 foot thick quarry run gravel layer in the pit bottom or no more than 8 foot deep. The collection well and pump to the west of the rock wall separating the old and new landfill pits shall be operated such that leachate is maintained at the lowest practicable level.

3. If decomposition gases migrate from or cause odor problems in the environs of the landfill, an active gas collection system shall be installed into the landfill upon completion of filling of this new area. The present gas collection and burning system shall be maintained in operating condition and run continuously until such time as it is replaced by a different system.

APPROVAL

The plans, specifications and operating procedures described above have been examined as to sanitary features of design which might affect the operation of the solid waste disposal area as a sanitary landfill. Approval of the plans, specifications and operating procedures is hereby given. This approval is given with the explicit understanding that the sanitary landfill will be developed and operated in compliance with the plans, specifications and operating procedures with the condition(s) of the permit, with the Missouri Solid Waste Rules and Regulations, and in accordance with the Missouri Solid Waste Management Law. This approval is not to be construed as compliance with any existing local ordinances or zoning requirements. The Department of Natural Resources reserves the right to withdraw the approval of these plans, specifications and operating procedures at any time that it is found that additional construction or alteration of the sanitary landfill is necessary to assure compliance with the rules and regulations and to afford adequate protection to the public health.

Thomas B. Ellis

Thomas B. Ellis
Environmental Engineer
Solid Waste Management Program

TBE/bki

REITZ & JENS, Inc. • 1040 North Lindbergh Boulevard • St. Louis, Missouri 63132 • 314 993-4132

2

CONSULTING ENGINEERS

June 21, 1983

RECEIVED

JUN 2? 1983

WASTE
MANAGEMENT PROGRAM

Mr. John D. Doyle, Chief
Technical Services
Waste Management Program
Mo. DNR
Box 1368
Jefferson City, MO 65102

Re: West Lake Demolition Landfill
Bridgeton, Mo.

Dear Mr. Doyle:

This is a followup of our discussion in your office on June 13, 1983 concerning the pending demolition landfill permit application for West Lake Landfill.

In accordance with our discussion with you and Lyle Crocker the proposed demolition landfill plan has been revised to exclude the N.R.C. area of concern on the northwest end of the landfill property. The revision removes 15 acres from the original 45-acre plan submitted in 1982. The 15-acre exclusion will leave ample space open until the engineering evaluation is completed and a final determination made for either removal or covering of the low-level radioactive wastes in this area.

The memorandum report of September 20, 1982 for the total 45-acre site has been revised to cover 30 acres and provides an air space volume of 750,000 cubic yards. Enclosed, for your review, are two copies each of the memorandum report, revised grading plan,and cross-sections, showing proposed final grades for the 30-acre demolition landfill.

The revised demolition landfill plan would provide suitable final grades for long-range development and end use of the property. It would also extend the life of the West Lake Sanitary Landfill operation under permit 118909 by keeping demolition material out of the sanitary landfill. At some later date, after the N.R.C. evaluation study is completed and a determination made for final disposal of the low-level radioactive waste, a new permit application could be filed for demolition landfilling this 15 acres and tie it into the adjacent 30-acre development plan.

If you have any questions, please call.

Very truly yours,

David E. Murray

DAVID E. MURRAY

Encl.
DEM/rs
cc: W.J. McCullough

LAI 0159

E 1501 — 1205

DEPARTMENT OF NATURAL RESOURCES

Division of Environmental Quality
P.O. Box 1368
Jefferson City, Missouri 65101

APPLICATION FOR OPERATING PERMIT

Solid waste disposal area or solid waste processing facility: (check only one)

- ☐ Sanitary landfill
- ☐ Incinerator
- ☐ Compost plant
- ☐ Other (specify) _____
- ☒ Demolition landfill
- ☐ Transfer station
- ☐ Resource recovery plant

Name of Area or Facility: West Lake Landfill, Inc.

Location: City: Bridgeton County: St. Louis

U.S. Surveys 47 ____ 1/4 ____ 1/4 ____ 1/4, Section ____ Township 47N Range 5E

Brief description of area or facility for which application for permit is made: (such as size or capacity) 45+ Acres

REVISED TO 22 ACRES 3/23/84
Wm J McC

Check type of waste proposed to be accepted:

- ☐ Municipal solid waste
- ☐ Bulky waste
- ☐ Dead animals
- ☐ Incinerator residue
- ☒ Demolition and construction waste
- ☐ Brush and untreated wood waste
- ☐ Septic tank pumpings
- ☐ Wastewater treatment plant sludges
- ☐ Other sludges (specify) _____
- ☐ Liquids (specify) _____
- ☐ Industrial process waste (specify) _____
- ☐ Hazardous wastes (specify) _____
- ☐ Other waste (specify) _____

Registered engineer or consulting engineering firm submitting plans:

Name: Reitz & Jens, Inc. Phone: 314/993-4132
Address: 1040 N. Lindbergh
City: St. Louis State: MO Zip Code: 63132

OPERATOR: (Person principally responsible for the operation.)
Name: William J. McCullough Phone: 314/739-1122
Address: 13570 St. Charles Rock Rd.
City: Bridgeton State: MO Zip Code: 63044

OWNER: (Legal owner of land or facility if different than operator.)
Name: _____ Phone: _____
Address: _____
City: _____ State: _____ Zip Code: _____

If granted this permit, we the undersigned, agree to abide by the rules, regulations, orders and decisions of the Missouri Department of Natural Resources. We understand that in the event of any false or fraudulent information in the application, plans and data, or of failure to operate the area or facility in a proper and legal manner, the permit may be revoked after due notice from the Missouri Department of Natural Resources. We understand the permit is not transferable.

William J. McCullough, President — Sept. 2, 1981
SIGNATURE OF OPERATOR — DATE

West Lake Landfill Inc. — Sept. 28, 1982
SIGNATURE OF OWNER — DATE

REITZ & JENS, Inc. • 1040 North Lindbergh Boulevard • St. Louis, Missouri 63132 • 314 993-4132

CONSULTING ENGINEERS

March 23, 1984

APR 03 1984

WASTE
MANAGEMENT PR

Dr. David E. Bedan, Director
Waste Management Program
Mo. DNR
Box 1368
Jefferson City, MO 65102

Dear Dr. Bedan:

This is to advise that Reitz & Jens, Inc., working with L. Bollinger as an independent contractor, has completed a survey assignment for West Lake Quarry & Materials Co. and West Lake Landfill Co. to locate pipes at NRC wells relative to power poles at the edges of fills. The work performed was to support West Lake's attached petitions to the Department of Natural Resources to reduce the size of the area designated as an uncontrolled hazardous waste site and request for a demolition landfill permit.

The mapped locations of drilled holes have been plotted and verified, under my direction, through generally accepted survey techniques. When holes have been covered or otherwise impossible to locate, we have plotted positions as referenced to the only alternative data available, the NRC published report of 1982. A similar approach was taken in plotting the perimeter drawn on these maps which indicates the applicable "hot spot" area designated by shading in the NRC report.

The outlined perimeter of the reduced "uncontrollable hazardous waste site" (now shown as Area 1 and Area 2) is never less than 100 feet from the nearest hole found by survey or identified, when they could not be located, as described above from the NRC study, and that the proposed demolition landfill site as indicated is at least 150 feet from the outlined perimeters of both Area 1 and Area 2 of the NRC report of 1982.

Very truly yours,

REITZ & JENS, INC. LS 25-D
by Henry M. Reitz, U.S. 1129
President

Encl.
HMR/rs

LAI 0160

APR 03 1984

WASTE
MANAGEMENT P

BOLLINGER SURVEYING CO.
9502 Minerva Ave.
Overland, MO 63114

March 23, 1984

Department of Natural Resources
Dr. David E. Bedan, Director
Waste Management Program
Missouri Department of Natural Resources
P.O. Box 1368
Jefferson City, MO 65102

Re: Survey for West Lake Quarry
& Materials Co.
13570 St. Charles Rock Rd.
Bridgeton, MO 63044

Dear Dr. Bedan:

This is to confirm that we have, on March 10 and 20, 1984 by order of West Lake Quarry & Materials Co., located the horizontal relationship of 30 points (vertical PVC pipes extending 2 to 3 feet above ground level), and recorded measurements taken in Field Book 13, Pages 62-68.

The aforementioned 30 points are designated as "Uncontrolled Hazardous Waste Disposal Areas" on drawing prepared by Reitz & Jens, Inc., Consulting Engineers, dated March 22, 1984. The 30 points located are designated as ● (darkened in circle), 10 of which are further identified as numbers 24, 25, 26, 27, 28, 29, 36, 37, 38, and 41 in Area 1 and 3, 4, 5, 6, 7, 8, 9, 10, 11, 12, 13, 18, 19, 20, 21, 33, 34, 35, 39, and 40 in Area 2 on the aforementioned drawing.

Sincerely,

Larry L. Bollinger

LARRY L. BOLLINGER
Missouri Registered Land Surveyor
#1671

E 15 01 — 12/75

DEPARTMENT OF NATURAL RESOURCES

Division of Environmental Quality
P.O. Box 1368
Jefferson City, Missouri 65101

APPLICATION FOR OPERATING PERMIT

Solid waste disposal area or solid waste processing facility: (check only one)

- ☐ Sanitary landfill
- ☐ Incinerator
- ☐ Compost plant
- ☐ Other (specify) _____
- ☒ Demolition landfill
- ☐ Transfer station
- ☐ Resource recovery plant

Name of Area or Facility: West Lake Landfill, Inc.

Location: City: Bridgeton County: St. Louis

U.S. Survey 47 1/4 ____ 1/4 ____ 1/4, Section ____, Township 47N, Range 5E

Brief description of area or facility for which application for permit is made: (such as size or capacity)

22-Acre demolition landfill

Check type of waste proposed to be accepted:

- ☐ Municipal solid waste
- ☐ Bulky waste
- ☐ Dead animals
- ☐ Incinerator residue
- ☒ Demolition and construction waste
- ☐ Brush and untreated wood waste
- ☐ Septic tank pumpings
- ☐ Wastewater treatment plant sludges
- ☐ Other sludges (specify) _____
- ☐ Liquids (specify) _____
- ☐ Industrial process waste (specify) _____
- ☐ Hazardous wastes (specify) _____
- ☐ Other waste (specify) _____

Registered engineer or consulting engineering firm submitting plans:

Name: Reitz & Jens, Inc. Phone: 314/993-4132
Address: 1040 N. Lindbergh
City: St. Louis State: MO Zip Code: 63132

OPERATOR: (Person principally responsible for the operation.)
Name: West Lake Landfill, Inc. Phone: 314/739-1122
Address: 13570 St. Charles Rock Rd.
City: Bridgeton State: MO Zip Code: 63044

OWNER: (Legal owner of land or facility if different than operator.)
Name: Same Phone: ____
Address: ____
City: ____ State: ____ Zip Code: ____

If granted this permit, we the undersigned, agree to abide by the rules, regulations, orders and decisions of the Missouri Department of Natural Resources. We understand that in the event of any false or fraudulent information in the application, plans and data, or of failure to operate the area or facility in a proper and legal manner, the permit may be revoked after due notice from the Missouri Department of Natural Resources. We understand the permit is not transferable.

Wm McCullough President — SIGNATURE OF OPERATOR — Mar 26 1984 — DATE

West Lake Landfill Inc — SIGNATURE OF OWNER — Mar 26 1984 — DATE

LAI 0101

MEMORANDUM REPORT

WEST LAKE DEMOLITION LANDFILL

BRIDGETON, MO.

Revised August 1984

REITZ & JENS, INC.
Consulting Engineers
1040 N. Lindbergh Blvd.
St. Louis, MO 63132

LAI 0162

MEMORANDUM REPORT

West Lake Demolition Landfill

Bridgeton, Mo.

Revised August 1984

STATE OF MISSOURI
DAVID E.
MURRAY
NUMBER
E-6817
REGISTERED PROFESSIONAL ENGINEER

REITZ & JENS, INC.

INDEX

	Page No.
Location	1
Discussion	1
Access	1
Method of Operation	1
Site Drainage	2
Cover Material	2
Final Cover	3
Equipment	3
Fire Protection	3
Dust Control	3
Vector Control	3
Operating Hours	3
Wastes Accepted	3
Landfill Life	3
Records	3
Summary	4

MEMORANDUM REPORT

West Lake Demolition Landfill Operation

Bridgeton, Mo.

Revised Aug. 1984

LOCATION:

This engineering memorandum report is for a demolition landfill operation at West Lake Quarry in Bridgeton, Mo. The 22+ acre demolition landfill site is located in U.S. Survey 47, T47N, R5E. The proposed site is in the north side of the 200+ acre West Lake Quarry property located between St. Charles Rock Rd. and Old St. Charles Rock Rd. This previously landfilled site is above the 100-year flood elevation which, at River Mile 31, is 457.1.

DISCUSSION:

The proposal for the demolition landfill operation would extend the life of the sanitary landfill operation under Permit 118909 by keeping demolition material out of the sanitary landfill. Incoming trucks with demolition material can be directed by the landfill ticket office to the demolition landfill area for unloading. Only demolition waste would be used to bring this 22-acre site up to indicated grades. The proposed demolition landfill will cover part of an old landfill and provide a suitable surface for future use for open storage yards over the completed demolition landfill.

ACCESS:

Access to quarry property is only through gates which are locked when the quarry is closed. A watchman is on duty on nights and weekends.

The demolition landfill site is accessible in inclement weather through use of all-weather roads. There is an all-weather access road from St. Charles Rock Rd to the landfill ticket office and from there to existing truck parking lot on the southwest corner of the site. From this corner an all-weather road can be constructed to the working face. This road extension will be constructed using crushed stone or suitable demolition material.

METHOD OF OPERATION:

Refuse trucks will enter the main entrance gate at St. Charles Rock Rd. and proceed to the ticket office for check-in prior to unloading, where the driver will sign a ticket. After check-in the driver with the demolition material will be allowed to drive to the building demolition landfill active area for unloading.

A visual inspection of each truck will be made by the dozer operator at the working face to prevent receipt of prohibited wastes. If any such waste is inadvertently deposited at the landfill, the dozer operator at the working face will stop the truck from leaving. The prohibited waste will be removed and loaded back on the truck for removal from the landfill, or set aside for proper disposition. The waste will be removed from the demolition landfill. Any sanitary waste can be moved to the sanitary landfill. Landfilling will start at the northeast corner of the site, working in a westerly direction toward the west end. Trucks will dump near the working face and the material will be spread by the dozer, then compacted to the smallest practical volume. Demolition waste will be spread and compacted in layers not to exceed two feet thick, when practicable.

Cover material will be spread and compacted over the solid waste accepted within 7 calendar days. Thickness of compacted cover shall not be less than 12 inches.

As portions of the landfill are brought up to final grade, the two-foot final cover will be applied.

SITE DRAINAGE:

The demolition landfill side slopes will be finalized at 3 to 1 maximum slope. To minimize erosion on the existing landfill slope along St. Charles Rock Rd., a 20-foot wide bench or terrace will be provided at the toe of the demolition landfill. This will intercept surface runoff from the demolition landfill and direct it to concrete spillways. To prevent surface runoff from going across the NRC area, clean earth fill (soil dike) will be mounded along the west end of the demolition landfill to form a swale which will direct runoff northwardly to a concrete spillway at St. Charles Rock Rd. The soil dike will be continued around the south side of the demolition landfill to direct surface runoff eastwardly to the drainage ditch now under construction along the side of the quarry entrance road. The side slope surface runoff on the east side will be into the drainage ditch along the side of the quarry entrance road. The final top surface of the landfill will be graded to drain 4% minimum slope to the closest outside edge of the landfill.

COVER MATERIAL:

Cover material for the landfill is on the 80+ acre quarry property just south of Old St. Charles Rock Rd. and will be hauled and stockpiled at the demolition landfill site, as required. Cover material required for the demolition landfill with an air space folume of approximately 600,000 cubic yards is only a portion

of cover material available on this adjacent property.

FINAL COVER:

Final cover will not be less than two feet thick. When an area reaches final grade and final cover applied, it will be seeded, fertilized and mulched to promote vegetation and minimize erosion. Final slopes will not exceed 33%.

EQUIPMENT:

One Caterpillar D-8 Dozer. Substitute equipment includes dozers, front-end loaders and Euclid End-dumps which are available from adjacent quarry and landfill operations.

FIRE PROTECTION:

A fire extinguisher is provided on each piece of equipment used at the landfill. Fire protection is furnished by the Pattonville Fire Protection District and the operator.

DUST CONTROL:

The roadway from the entrance gate to the landfill operations will be watered by sprinkler truck, as required, to keep dust down.

VECTOR CONTROL:

The present vector control program for the sanitary landfill, approved by the St. Louis County Health Department, will be used as needed in the demolition landfill area. Scavenging and open burning will not be permitted.

OPERATING HOURS:

The demolition landfill will be open from 7:00 AM to 4:00 PM on weekdays and from 7:00 AM to 12:00 noon on Saturday.

WASTES ACCEPTED:

In addition to the landfill entrance sign, a sign will be posted at the entrance listing wastes to be accepted. "Only the following solid waste materials will be accepted for disposal at this demolition landfill: demolition wastes, construction wastes, tires, inert plastics, soil, rock, and concrete." No other material will be permitted without prior approval of Mo. DNR. Hazardous and radioactive wastes will not be accepted for disposal at this site.

LANDFILL LIFE:

This demolition landfill area has an airspace volume of approximately 600,000 cubic yards. It is estimated that the demolition landfill would receive about 500 cubic yards of demolition material per day.

RECORDS:

Records will be maintained covering: 1) number of truckloads received;

2) type material; 3) litter and dust control efforts; 4) any unusual problems.

SUMMARY:

It is planned to use this demolition landfilled area only as an open storage yard; no structures are planned.

The proposed demolition landfill operation would provide a suitable final grading plan over an old landfill area. The demolition landfill on top of the old landfill area should have a positive effect on the environmental stability of the existing waste and hydrology of the site. The present surface is now relatively flat and settling from past years has caused depressions which pond water and add to infiltration into the old landfill. The demolition landfill will cap off the old landfill to minimize infiltration which, when decreased, should also decrease leachate generation on this site.

This proposal would finalize grades for long-range development plans and end-use of the property. It would also extend the life of the West Lake Sanitary Landfill operation under Permit 118909 by keeping the demolition material out of the sanitary landfill. At a later date after the NRC makes its determination for final disposal of the low-level radioactive waste, a new demolition landfill permi application could be filed for this 20+ acres on the northwest end of the landfill property and tie it into the adjacent 22-acre development plan.

3

August 10, 1984

MISSOURI DEPARTMENT OF NATURAL RESOURCES
P.O. Box 1368 1915 Southridge Drive Jefferson City, Missouri 65102 (314) 751-3241

Mr. David E. Murray
Reitz & Jens, Inc.
Consulting Engineers
1040 N. Lindbergh Blvd.
St. Louis, Missouri 63132

Dear Mr. Murray:

The Waste Management Program (WMP) has reviewed the above referenced application, received on April 3, 1984. The following questions and comments will need to be addressed prior to continuing the review process.

Design: 10 CSR 80.4010(5)

The engineering report and plans must be sealed by a registered professional engineer licensed by the state of Missouri. We are sending back all but one copy at the engineering report to be sealed. We recommend that all revisions be included in the engineering report. The WMP requires two copies of the engineering report and plan sheets. We received only one set of revised plan sheets. Please send us another sealed copy.

Solid Wastes Accepted and Excluded

1) 10 CSR 80-4.010(2)(B)(2):

Provisions for waste requiring special handling should be addressed.

2) 10 CSR 80-4.010(2)(C)(2):

The list of wastes to be accepted shall be displayed prominently at the site entrance.

3) 10 CSR 80-4.010(3)(B) and (C):

The engineering report states the trucks "check in". What does the check in procedure consist of? What procedures are followed to prevent the receipt of prohibited wastes? In the event that prohibited waste is inadvertently deposited at the landfill, what are the procedures for handling, storing, and removing this waste? Is access to the site controlled to prevent unauthorized, after hours dumping?

Site Selection 10 CSR 80.4010(4)

1) The following must be included in the plans: Land use and zoning within 1/4 mile of the site, including location of all residences, buildings, wells, water courses, springs, lakes, roads, and soil or rock borings. Also, all electric, gas, water, sewer, and other utility easements or lines that are located on, under, or above the actual disposal site, shall be shown on the plans. What are the present zoning requirements of the site? What will be the future zoning requirements of the site as an office/industrial park and storage areas?

2) Future use: How will usage as a storage/office/industrial complex affect the landfill? What steps will be taken to protect its state of closure? How will the landfill affect the future use? Is the filled area to be used only as an open storage area, or are other uses such as structures planned? What types and quantities of materials and equipment, are to be stored on the filled area? Please be more specific.

3) Proposed contours: The final contours shown on the site plans indicate that the slope will vary from 1.5% to 2%. The WMP believes these slopes to be inadequate for proper surface runoff and the prevention of ponding over an extended period of time, particularily given the proposed future use as an open storage area. The WMP suggests that minimum slopes of 3% to 5% are necessary to enhance surface runoff and prevent ponding.

4) Please provide background information on the construction, depth, and type of material disposed of, for the previous underlying landfill.

5) Please provide a description of the geology and hydrology of the site which underlies the existing fill material. Are the additional lifts of demolition waste expected to have a positive or negative effect on the environmental stability of the existing waste and hydrology of the site? Please explain.

6) Is the site accessible in inclement weather? How are on-site roads to the working face maintained for all weather access?

Water Quality 10 CSR 80-4.010(6)

Please provide cross sections showing the dimensions and construction details for the proposed soil dike, drainage ditch, and concrete spillways. Also, please provide details for the method of directing southerly runoff eastward toward the drainage ditch. The site plans indicate surface runoff through large piles of material.

Gas Control 10 CSR 80-4.010(8)

The need for gas control should be addressed in the plans. If gas control is unnecessary, please explain this decision. If gas control is necessary, please explain the control measures to be provided in detail. Please address the need for gas control and monitoring for future land uses.

Cover Material 10 CSR 80-4.010(11)

The plans did not specify the cover material quantities available and needed for completion of the demolition landfill. Procedures to maintain cover material integrity need to be specified.

Compaction 10 CSR 80-4.010(12)(C)(1)(A)

Wastes are to be spread in layers not to exceed two feet thick when practicable. This provision needs to be stated in the report.

Records 10 CSR 80-4.010(14)

Specific details of plans and procedures to satisfy the requirements of this provision must be supplied in the engineering report.

If you have any questions or comments, please advise.

Sincerely,

Michael Phillips

Michael Phillips
Environmental Engineer
Permits Section
Waste Management Program

MP:mss

cc: Mr. William J. McCullough
St. Louis Regional Office

3

REITZ & JENS, Inc. • 1040 North Lindbergh Boulevard • St. Louis, Missouri 63132 • 314 993-4132

CONSULTING ENGINEERS

August 24, 1984

Mr. Michael Phillips
Waste Management Program
Mo. DNR
Box 13570
Jefferson City, MO 65102

Re: West Lake Demolition Landfill
Permit Application, Bridgeton, Mo.

Dear Mr. Phillips:

This follows up my phone conversation with you today concerning the past history of the old West Lake Landfill area under the proposed 22-acre demolition landfill site.

A review of West Lake file records shows that landfill permit numbers were issued to West Lake Landfill by Mo. DNR.

Permit No.	Type Landfill	Acres	Issue Date
218903	Demolition	27	1/27/76
118903	Sanitary	25	1/27/76
118906	Sanitary	13	1/22/79
118908	Sanitary	6	8/27/80
118909	Sanitary	-	8/20/81

A copy of each permit is attached.

Also attached is a copy of Mo. DNR letter dated October 10, 1974 approving the plans and specifications for the West Lake Landfill, Inc. Demolition Landfill with report of approval attached. The report of approval specifies the location of areas for demolition landfilling. There were no official permits for landfilling at this time and the demolition landfill was allowed to continue operation based upon receipt of this report of approval.

The report of approval states that the demolition landfill "...shall be specifically located in the area designated in the plans as Areas 1, 3, 5, and 6 (see Plate No. 3-1)." Enclosed is a copy of the Elbring Co. area map, Plate No. 3, dated 9/6/73 showing the existing quarry area, existing landfill area, and proposed landfill area at that time (we do not have nor do we know where a copy of Plate No. 3-1 might be found). According to the Mo. DNR report of October 10, 1974, the existing landfill areas were approved for demolition landfilling. The old landfill

LAI 0164

area, under the proposed (1984) 22-acre demolition landfill site, was approved in 1974 for demolition landfilling (see Area Map, Plate No. 3).

Also enclosed are three copies of the Engineering Report and plans.

I trust this information answers your question. If not, please advise.

Very truly yours,

David E. Murray

DAVID E. MURRAY

Encl.
DEM/rs
cc: W.J. McCullough

reviewed 5/25/89

ORIGINAL PERMITS	218903	DEMO. LF	27 Ac	1-27-76
	118903	SAN LF	25 Ac	1-27-76
EAST OF OFFICE BLDG	118906	SAN LF EXP.	13 Ac	1-22-79
OLD BURNING AREA	118908	"	6 Ac	8-27-80
BLACK LAKE AREA	118909	"	3 Ac	8-20-81

52

62

4

CERTIFIED MAIL P395083426

September 17, 1984

Mr. William J. McCullough
13570 St. Charles Rock Road
Bridgeton, MO 63044

RE: Solid Waste Disposal Area Operating Permit #218912

Dear Mr. McCullough:

An application for Operating Permit has been filed with the Missouri Department of Natural Resources requesting a permit to operate a demolition landfill designated in the application as the West Lake Landfill, Inc. The application was filed by William J. McCullough and submitted to the Department of Natural Resources for review and approval. The application includes engineering plans, and specifications, operating procedures and subsequent correspondence or amendments for the subject facility. The application has been prepared by Reitz & Jens, Inc. The application has been reviewed for compliance with the Missouri Solid Waste Management Law (Sections 260.200 to 260.245, RSMo. 1978) and the Missouri Solid Waste Management Rules and Regulations.

In accordance with Section 260.205, Paragraph 2, RSMo, 1978 the Missouri Department of Natural Resources hereby approves the application and issues Permit Number 218912 to West Lake Landfill, Inc. for the operation of a solid waste disposal area set forth in the application as the West Lake Landfill. This permit applies only to that tract of land of approximately 22 acres, as described by the engineering plans, specifications and operating procedures submitted to the Department. The final approved engineering plans, specifications and operating procedures described below are attached hereon and made an official part of this permit:

Documents

1. The completed Application for Operating Permit form dated September 10, 1982, which signified William J. McCullough as the operator of the facility and West Lake Landfill, Inc. as the legal owner of the land and/or facility.

2. The engineering report titled Memorandum Report West Lake Demolition Landfill, Bridgeton, MO., dated August 1984, prepared by Reitz & Jens, Inc., and sealed by David E. Murray, P. E.

MISSOURI DEPARTMENT OF NATURAL RESOURCES
x 176 Jefferson City, Missouri 65102 (314) 751-4422

LAI 0165

Christopher S. Bond Governor
Fred A. Lafser Director

3. Plan sheet one of two titled "West Lake Landfill, Inc. Demolition Landfill Grading Plan" revised August 16, 1984 and plan sheet two of two titled "West Lake Landfill, Inc. Demolition Landfill Cross Sections" revised August 16, 1984. Prepared by David E. Murray, P. E., of Reitz & Jens, Inc.

4. Correspondence dated August 17, 1984 from David E. Murray, P. E. of Reitz & Jens, clarifying design and operating procedures.

5. Correspondence dated August 24, 1984 from David E. Murray P. E. of Reitz & Jens, providing background information of West Lake Landfill, Inc.

Approval of the application and issuance of this permit is given with the explicit understanding that the demolition landfill will be developed and operated in compliance with the plans, specifications and operating procedures, with the conditions of the permit, with the Missouri Solid Waste Rules and Regulations, and in accordance with the Missouri Solid Waste Management Law. This permit is not to be construed as compliance with any existing local ordinances or zoning requirements. This permit for operation of a solid waste disposal area is issued only to the person named in the application and shall not be transferable.

Conditions

The following conditions are an integral part of the permit. Compliance with these conditions shall, in part, determine compliance with the permit.

1. The equipment will be available and operated to spread and compact the solid waste as received or at anytime the quantity of waste has accumulated to 200 cubic yards without being spread and compacted as per 10 CSR 80-4.010(12)(C)(2).

2. Peripheral drainage in ditches, dikes, and terraces will be maintained in such a manner so as to prevent ponding, and drainage into the surrounding fill areas.

3. Upon closing of the demolition landfill, a detailed description, on a licensed surveyor's plat, shall be recorded with the recorder of deeds in St. Louis County as per 10 CSR 80-4.010(14)(C)(2).

4. Records will be maintained covering [illegible] and each day that all solid waste is covered [illegible] of cover material as per 10 CSR 80-4.010[illegible]

Facility Description

The proposed demolition landfill is located in the U.S. Survey 47, T47N, R5E, St. Louis County, Missouri. The proposed site consists of a total of approximately 200+ acres of which approximately 22 acres will be utilized for demolition landfill. This is a previously filled site. Approval to operate a demolition landfill on this site was given October 10, 1974, and Permit Number 218903 was issued January 1, 1976. Previous to that the site had been used as an unpermitted sanitary landfill. The types of wastes to be accepted will consist of demolition wastes, construction wastes, tires, inert plastics, soil, rock, and concrete. Approval to dispose of special wastes other than the wastes listed above (except hazardous wastes, explosives, or radioactive material) will be considered on a case-by-case basis, as provided in 10 CSR 80-3.010(3). The area method of demolition landfill operation will be utilized. The fill heights and area locations are to be completed as shown on the approved engineering plans and specifications. Upon completion of the landfill, the site will be used as an open storage yard.

All fencing, gates, all-weather access roads, signs, surface-water control devices, operating equipment, standby equipment and other necessary appurtenances shall be provided as per the final approved plans, specifications and operating procedures. The plans, specifications and operating procedures described above have been examined as to sanitary features of design which might affect the operation of the solid waste disposal area as a demolition landfill.

Modification and Termination of Permit

The Department reserves the right to revoke or modify this permit after due notice:

1. If it is found that the holder of the permit is in violation of the Missouri Solid Waste Management Law, or the Missouri Solid Waste Management Rules and Regulations;

2. For failure to operate in accordance with the approved plans, specifications and operating procedures;

3. For creating a public nuisance, health hazard or causing environmental pollution;

4. For failure to comply with any and all conditions of the permit, as described herein;

5. If it is found that additional construction or alteration of the solid waste disposal area is necessary to comply with any and all rules and regulations promulgated in accordance with the Missouri Solid Waste Management Law;

6. If it is determined a facility has not been operated for a period of one year.

This permit shall become void after notice to the Department by the person named in the permit that said person has discontinued operation of the disposal area.

Upon initiation of operation at your landfill, you will have indicated your acknowledgement and acceptance of this permit and conditions of the permit. If you have any questions, please contact the Waste Management Program at (314) 751-3241, or P.O. Box 1368, Jefferson City, MO 65102.

Sincerely,

DEPARTMENT OF NATURAL RESOURCES

Ron Lucia

Fred A. Lafser
Director

FAL:mpl

Enclosure

cc: East-West Gateway Regional Planning Commission
St. Louis Regional Office
David E. Murray, P. E., Reitz & Jens, Inc.
St. Louis County, Dept. of Health
Waste Management Program

Burns & McDonnell
ENGINEERS - ARCHITECTS - CONSULTANTS

September 26, 1984

Mr. John D. Doyle, P.E.
Chief, Technical Services Section
Waste Management Program
Missouri Department of Natural Resources
P. O. Box 1368
Jefferson City MO 65102

Permit Application and Engineering Report
West Lake Landfill, Inc. Landfill Expansion
Project 84-075-1-001

Dear Mr. Doyle:

Please find enclosed three copies each of the Permit Application and Engineering Report and Drawings for West Lake Landfill, Inc. Sanitary Landfill Expansion for your review and approval. Due to the fact that the existing landfill's remaining life is just a few months, it will be greatly appreciated that your review be completed as expediently as possible.

If you have any questions regarding the information submitted, please advise.

Sincerely,

Robert M. Robinson

Robert M. Robinson, P.E.
Project Manager

RMR/gph

Enclosure

cc: Mr. William McCullough

LAI 01666

4800 EAST 63rd STREET, PO BOX 173, KANSAS CITY, MISSOURI 64141 • TEL: 816-333-4375 TWX: 910-771-3059

5

February 27, 1985

Mr. Robert M. Robinson, P.E.
Burns & McDonnell
P. O. Box 173
Kansas City, MO 64141

RE: Application for Operating Permit for West Lake Sanitary Landfill

Dear Mr. Robinson:

The Waste Management Program (WMP) has reviewed the above referenced submittals, received October 1, 1984. Several items of major concern arose regarding potential long-term environmental problems at the West Lake site. These items include: the present inflow of leachate and groundwater into the proposed disposal site; the physical and hydraulic connection of the proposed site to past disposal areas; and the long term potential for leachate migration away from the site.

Page I-1 of the engineering report and previous conversations indicate that the West Lake Landfill is at or near completion of the presently permitted volume. It should be noted that operation of the fill beyond permitted limits would be in violation of the Solid Waste Management Law. We recognize the areas of major concern noted in this letter may not be quickly addressed but must be resolved prior to finalizing the WMP's review and recommendation for issuance of a permit.

The following questions and comments prepared by WMP staff will need to be addressed prior to continuing the review process.

1) What potential effects will the old fill areas have on the proposed site, and vice versa? Due to the many varied past landfilling operations and their potential problems, a detailed discussion relating the proposed fill area to other fills on the property is requested. The proposed site should be conclusively shown to be geologically and hydrologically isolated from past disposal areas, or the interrelationship with areas it is not completely isolated from should be discussed at length.

2) The inflow of water in the northeast corner is a major potential deficiency in the suitability of the site. As such, this flow should be discussed in detail along with any attempts to correct this deficiency.
   a) What is the source of this inflow? A detailed discussion of the source of this inflow is needed. Any rationalizations or assumptions made should be included.

MISSOURI DEPARTMENT OF NATURAL RESOURCES
P.O. Box 176 Jefferson City, Missouri 65102

John D. Ashcroft Governor

LAI 0167

b) It is recommended that the hydraulic pressure head of this flow be determined by placing piezometers upstream of the grout. Also, the rate of inflow (gpm) prior to grouting attempts should be provided, as should the present rate of inflow.

c) Please provide specific details concerning the placement of the grout, such as method of grouting, location of grouting, type (design mix) of grout, the amount of grout used thus far, and the total amount of grout used to stop the inflow.

3) What is the average rate of leachate inflow from the existing site? What is the source of this persistent flow of leachate? Please discuss in detail and in relation to the sources of leachate in interrelated, past disposal areas.

4) Due to the potential for subsurface, off-site migration of leachate, a positive hydraulic seal will be required, such as a compacted clay pad, in the northeast corner and along the western portion of the north wall where solution work is evident. Additionally, the upper wall of the western part of the quarry has some severe solution work that would not be expected to contain liquids. It is recommended that positive vertical drainage be maintained in this area or that a compacted clay pad be considered.

5) On page II-3 of the engineering report it states "...the landfill design provides for pumping the leachate so the depth will never exceed more than 20 feet". From the engineering report it is unclear as to how the landfill design provides for this.

a) Given the total depth of fill, floor drains and gravity may be inadequate to assure the migration of leachate to the sumps where it can be pumped. Provisions should be made to assure good internal drainage of leachate. A system of laterals at numerous elevations may be appropriate to prevent a large head buildup within the trash. Is it possible to utilize the gas collection system as additional lateral and vertical leachate migration routes? Please discuss.

b) The engineering report provides for maintaining the leachate management system for at least 20 years, and longer if necessary. Long term maintenance of the leachate management system is a major concern at this facility and must be adequately addressed in the design. Please provide an estimation of the annual expected post closure volume of leachate that will need to be treated. What specific provisions have been made to assure the successful administration and financing of this program?

6) The discussion of leachate generation of the proposed site should include the potential "worse case" scenario. If the grouting in the northeast corner fails, or if the flow eventually enters the fill through an alternate path, what would be the expected leachate generation rate? What is the overall capacity of the leachate treatment system and how much leachate is presently treated annually?

7 a) The landfilling system proposed for this facility promotes the percolation of water through the fill by eliminating intermediate cover and utilizing an undulating surface. This is not an approved method of operation and therefore needs to be discussed in more detail to justify its implementation (i.e., purpose, advantages, disadvantages, other design features which account for the lack of grading and cover, etc.).

b) Once the level of waste reaches the rim elevation, will the landfill utilize intermediate cover and proper surface grading, or will water continue to be allowed to infiltrate the fill?

c) The engineering report provides for the field storage of water by solid waste of 15 percent by volume. While this may be valid during the operating life of the fill, it probably is not valid for the post closure life of the fill. Eventually the field storage will become saturated, potentially creating an increase in leachate generation after closure of the landfill. If this leachate does not have adequate internal drainage it could cause leachate outbreaks above the top of the quarry wall, along the slopes of the completed fill. Leachate this high in the fill could potentially migrate away from the quarry. Please discuss the procedures to be used to contain and collect leachate outbreaks which may occur above the rim of the quarry.

8) In order to minimize odor problems during operation and following closure, flare caps will be required on all gas collection risers. A schedule should be established which provides for the flaring of these wells at necessary intervals. Please discuss the need for continuous flaring versus intermittent flaring.

9) The final contours depicted on page 3 of the engineering plans indicate that new fill is to be placed over approximately 15 acres of the existing landfill site.
   a) Due to the substantial amount of additional fill in this area, a leachate collection system promoting positive vertical drainage to existing or proposed systems will be required. How will the existing leachate and gas collection system in this area be adapted to accomodate the additional fill?
   b) It also appears that this fill will extend over the western rim of the quarry. What type of base material is located at the top of the western rim, north of the primary crusher unit? Will this material serve as an adequate landfill base, to prevent the migration of leachate away from the fill area? Please discuss.

10) 10 CSR 80-3.010(12)(C)(1)(A) requires that solid waste be spread in layers no more than two feet thick, while confining it to the smallest practicable area. Please acknowledge that this is the intended method of operation.

11) It is understood that the equipment currently in use will be utilized in the new landfilling operation. Please provide a list of this equipment, the arrangements made for substitute equipment, the type of substitute equipment, and the preventative maintenance program for this equipment.

12) An operating manual describing the various tasks that must be performed during a typical shift should be submitted and should be available to employees for reference.

13) Please describe the on-site communication system.

14) 10 CSR 80-3.010(14)(C)(1)(E) requires that records be kept of quantitative measurements of solid waste handled. It is recommended that this be accomplished through routine or periodic utilization of scales and/or topographic surveys. The engineering report indicates records will be kept of the estimated quantity of solid waste received on each calendar day. How is this quantity to be estimated so as to satisfy this requirement?

15) For your information, I have enclosed a technical bulletin detailing closure procedures for sanitary and demolition landfills. Since this is apparently the last area of the present West Lake site, proper closure of this area is important to help assure the overall environmental stability of the site. Please assure that the applicable closure aspects outlined in the technical bulletin are included in the application report.

Should you have any questions, please contact Mike Phillips at (314) 751-3241.

Sincerely,

Thomas R. Gredell

Thomas R. Gredell, P.E.
Environmental Engineer
Permits Section
Waste Management Program

TRG:MP:lh

Enclosure

cc: St. Louis Regional Office
West Lake Landfill, Inc.

Burns & McDonnell
ENGINEERS - ARCHITECTS - CONSULTANTS

March 14, 1985

Mr. Thomas R. Gredell, P.E.
Environmental Engineer
Permits Section
Waste Management Program
Missouri Department of Natural Resources
P. O. Box 1368
Jefferson City MO 65102

Application for Operating Permit
West Lake Sanitary Landfill
Project No. 84-075-1-001

Dear Mr. Gredell:

This is in reply to your letter dated February 27, 1985 with regard to the above landfill permit application. We appreciate the reference in your letter to past disposal areas and the long term potential for leachate migration. We trust the department does not plan to use the landfills operated prior to the existing 1972 Solid Waste Management Law as reason for restricting construction of the proposed landfill expansion. You are aware that West Lake Landfill, Inc. has employed Burns & McDonnell to conduct a groundwater investigation related to the early landfill operations. The preliminary phase of that study has been completed and three copies of the report have been forwarded to the Department of Natural Resources under separate cover. Additional investigations are proceeding in that regard.

We believe with the basic understanding of the geologic setting for the disposal area described in our application report on pages II-2 and II-3 and the commitment to maintain the leachate level far below the groundwater in the river alluvium, that the questions related to old landfill areas have no merit. However, to expedite the application we will answer the questions in the order listed in your letter and where the answers are reasonably obtainable.

1. With one minor exception, the proposed fill is hydrologically and geologically isolated from the old fill areas. This is because the proposed site has been excavated into impervious bedrock, and the old fill areas were constructed on the alluvium overlying the rock adjacent to the proposed fill. The lack of hydraulic connection between the groundwater in the alluvium and the quarry pit where the new site is proposed is conclusively illustrated by the absence of significant groundwater inflow into the much deeper quarry pit along the west wall. The exception to this lack of interconnection is an

LAI 0168

4800 EAST 63rd STREET, P.O. BOX 173, KANSAS CITY, MISSOURI 64141 • TEL: 816-333-4375 TWX: 910-771-3059

inflow of leachate into the northwest corner of the proposed landfill from the fill that was placed in a previously quarried area northwest of the proposed site. The inflow of water to generate leachate in that filled quarry (current landfill area) is both from rainfall on the surface and leachate and groundwater derived from the older landfill constructed on the alluvium to the west of the filled quarry. This connection, through which groundwater and leachate enter the filled quarry from the alluvium, is a jointed zone in the bedrock of the wall of the filled quarry.

With the commitment to collect and treat the leachate from both the current and proposed landfill, there is no adverse environmental impact with the proposed design and operation. Any movement of leachate from the old fill into the current and proposed landfill can only provide a positive environmental impact.

2.a. The inflow of water in the northeast corner of the proposed site is derived from groundwater which occurs in a joint system in the bedrock. This joint system is recharged from rainfall on the bluffs above the site to the east. The large size of the bedrock exposure in the existing quarry, where no other inflows are to be seen adjacent to the uplands, attests to the fact that water-bearing joints are rare in the area.

2.b. The grouting program in the northeast corner of the quarry is presently in progress. A groundwater well will be placed upstream of the bedrock grout seal to monitor the water level. The rate of inflow prior to grouting was never measured but was estimated in the range of 75 to 100 gpm. After grouting we expect the inflow to be eliminated.

2.c. A final report on the grouting operation will be prepared by the drilling company and we will forward it to you shortly.

3. The average rate of leachate inflow from the existing site is less than 30 gallons per minute which included a major portion of the surface water draining from the current landfill. As discussed in response to Question 1, the source of this flow of leachate is the infiltration of rainwater, surface water and seepage of groundwater and leachate into the current landfill. The inflow into the filled quarry (current landfill) is through fractures in the upper level of the bedrock on the northwest side of the quarry. West Lake Landfill, Inc. is currently considering expansion of the gas collection system for beneficial use of the gas. This expansion would include the drilling of additional wells. One of these wells would be drilled near the northwest wall of the filled quarry, in the area of the seep through the bedrock into the fill. By screening the well in the proper zone, the well could serve the dual purpose of collecting gas and monitoring hydraulic head of the leachate. Thus, data could be obtained on the elevation of the leachate in the current fill, and the well could

be pumped if necessary to keep the leachate level in the vicinity of the seep below the water level in the alluvium below the old landfill. This would assure that the leachate does not flow out of the filled quarry into the old landfill.

4. A positive hydraulic seal is not necessary in the northeastern corner of the site because the pressure head of the groundwater will be higher than the leachate level in the landfill. We already know from the grouting program to date that the groundwater level is at least 30 feet above the quarry floor. A monitoring well will be constructed north of the grouted joint to monitor the groundwater elevation and provide a production well to pump the groundwater if in the future there are indications that the grout seal has failed.

   A minimum four-foot-thick layer of soil will be placed against the northeast wall in the immediate area of the grouted limestone joint as the landfill lifts are constructed. This four-foot-Thick layer of soil will also be placed along the west quarry wall above elevation 430. This will provide added assurance that leachate will flow down to the collection system.

5.a. The leachate drains on the floor of the quarry will provide drainage of leachate to the leachate collection sumps. We agree to expand the floor drain system to provide a drain within 150 feet of all quarry walls. These drains will be constructed by blasting the quarry floor or piling a ridge of rock four feet high on the floor. Concern about internal drainage of the leachate is unwarranted when you consider that neither the solid waste or the daily soil cover is impermeable. Leachate will move by gravity downward as soon as the waste and daily cover reach field capacity. The leachate sump will be pumped sufficiently to maintain a steep downward gradient by keeping the leachate in the sumps below 20 feet.

   We concur that the gas collection laterals and riser pipes would provide backup migration routes for leachate movement. However, it is our opinion that the leachate will move vertical through the waste in response to the downward gradient rather than through the horizontal gas collection laterals. The gas riser pipes will serve to monitor that the leachate is not mounding or perching at a high elevation in the landfill.

5.b. The post closure volume of leachate has been estimated at less than 20 million gallons per year for the current and proposed landfill. The landfill operator will establish an independent askew fund to assure that money is available for leachate collection and treatment. This fund will be generated by a small portion of the disposal fees being paid into the fund during the landfill life. This fund will be established beginning January 1987 unless the State of Missouri has enacted legislation providing for post closure care funds.

6. We have already indicated that the flow of water into the northeast corner was estimated at 75 to 100 gallons per minute. As mentioned in the response to Question 4, a water production well will be placed in the joint system. This well could be pumped to lowering the head in the joint system sufficiently to prevent major inflows into the leachate collection system should the grout fail. Because the water produced from the proposed production well is groundwater that will not have come in contact with the fill, it will merely be discharged into drainage ditches at the ground surface. We estimate that with such a contingency plan, that the increase of leachate would be less than 25 gallons per minute.

   The overall capacity of the leachate system is the 100 gpm discharge to MSD. It should be possible to revise this limitation as the MSD system is expanded.

   Approximately 31.5 million gallons of leachate are presently produced and treated annually based on the system pumping rate discussed in Part I of the report.

7.a. In a deep quarry like West Lake, it is not feasible or really possible to collect the surface water separately once the landfilling operation has progressed across the entire bottom of the quarry. Surface water has been diverted around the landfill to limit surface water to direct rainfall on the landfill. Because intermediate soil cover can limit the rate of infiltration of rainfall and a gas collection system is provided to control odors, there is no apparent advantage of using intermediate soil cover at this landfill except as noted in the report.

7.b. Intermediate cover and surface grading will be used once the landfill reaches an elevationthat surface water can be drained to the natural ground surface.

7.c. Our estimates of leachate quantity after closure do not consider an allowance for field storage. There will be no increase in leachate after closure, because then there is surface runoff.

   There is no reason to believe that adequate internal drainage of leachate will not exist, even with the use of intermediate soil cover. Traffic compacted loess soil one foot thick will not cause leachate outbreak above the quarry rim. Our experience has found two conditions must exist to create leachate outbreaks on the side slopes of landfills. The cause is surface water being allowed to enter the landfill because of permeable cover soil or poor surface drainage from settled areas on the landfill surface combined with the use of a compacted clay soil on an intermediate lift. These two conditions in combination will not exist on this landfill as designed. In the unlikely event leachate outbreaks were to occur the operator would apply extra soil to the outbreak and correct the drainage problem contributing to the outbreak.

8. The landfill gas will be burned (flared) as soon as a combustible quality of gas is produced in the collection system. We would expect to begin burning gas within about six months of constructing a landfill lift over the gas collection lateral. The only option is whether the gas will flow to the flares by the natural venting pressure of the gas or whether a vacuum blower will be used. A blower will be installed if any odor problems occur or the gas is being removed for utilization.

9.a. The increased elevation of the landfill over the existing landfill area is insignificant except where the side slope extends down into the large quarry. The landfill elevation was increased basically to improve surface water drainage control. Vertical drainage of leachate will occur the same as is now occurring through the first 180 plus feet of waste and soil cover. The improved drainage control should even reduce the amount of infiltration and the corresponding volume of leachate. Therefore, no revisions are needed to collect leachate. Please note in Item 3 that the operator plans to expand the gas collection system to facilitate its utilization. The existing gas and leachate collection wells will be raised as necessary to the landfill surface.

9.b. The area directly north of the primary crusher unit is a shallow limestone quarry excavated to an elevation below 405. This is about 30 feet below the water in the alluvium, therefore, interconnection does not appear likely. No groundwater seepage is apparent in the area. To provide added assurance that leachate cannot migrate from the proposed landfill, four foot of soil will be placed against the west quarry wall above elevation 430.

10. The landfill expansion will operate in concurrence with the regulations as practiced by the current landfill by spreading and compacting the waste in two-foot-thick layers.

11. Sufficient equipment will be provided to compact and cover the solid waste in accordance with regulations. Existing equipment includes:

D-8 Track Dozer
Hylift with 6 Cubic Yard Bucket
Two Large Off-Road Type Trucks (35 ton cap.)
D-8 Track Dozer (backup)
Water Truck
Motor Grader

Substitute equipment is available from the adjacent quarry operation and the demolition landfill. The equipment is routinely serviced daily and at other maintenance schedules in accordance with West Lake's long established operating policies.

12. West Lake Landfill, Inc. employees experienced equipment operators familiar with the routine spreading and compaction of waste. They operate under the direct supervision of either Mr. Vern Farr or Mr. William Canney. These individuals have the responsibility of assuring that the operation is conducted in accordance with the engineering plans, reports and the state and county regulations. Written instructions other than the plans and reports already provided do not appear necessary for these experienced supervisors and operators.

13. A telephone is provided the landfill office to contact emergency services and agencies. Pickup trucks operated by supervisors are equipped with two-way radios to the office.

14. Please find attached a copy of the "Daily Load Report" that is used to estimate the quantity of waste received.

15. Page III-7 of the engineering report addresses the closure required by the State regulations. We did not receive a copy of the technical bulletin noted in your letter, but we assume it has not been updated within the past few months. If we have failed to address a requirement for closure, please advise.

Your early review of our reply will be appreciated.

Sincerely,

Robert M. Robinson

Robert M. Robinson, P.E.
Project Manager

RMR/skb
Attachment
cc: West Lake Landfill, Inc.

MISSOURI DEPARTMENT OF NATURAL RESOURCES
P.O. Box 1368 Jefferson City, Missouri 65102

May 21, 1985

Mr. James Gunn
Stilar & Heitzmann
Attorneys at Law
515 Olive Street
St. Louis, MO 63101

RE: Application for Operating Permit - Proposed West Lake Sanitary Landfill, St. Louis County.

Dear Mr. Gunn:

Following our meeting on May 20, I discussed the application with my staff. The following are general statements of the issues which have not been adequately addressed thus far. A comment letter to the engineer explaining these statements and requiring a detailed response is presently being prepared by the Waste Management Program.

1. Infiltration of leachate from previously filled areas and of groundwater from the northeast wall of the proposed area - Although efforts have been made to minimize groundwater inflow, it has not been determined that these efforts are permanent solutions. Therefore, the engineering report and plans must provide details and provisions for long term financing, maintenance, and administration of the leachate and gas collection systems. Without long term maintenance the site poses an unacceptably high potential for environmental harm. There are also several other related issues regarding leachate production which must be resolved.

2. A minimum of one leachate collection point and observation well will be required in each of the previously filled quarries.

3. The submitted design does not provide a positive seal above elevation 400 (MSL). Therefore, a positive draining interface should be constructed along the quarry walls above elevation 400 (MSL).

4. The design should include provisions to remove final cover from old fill areas which are to be covered with additional waste.

5. Details are needed concerning the proposed method of access to the working face, especially in inclement weather.

6. Details concerning the suitability of the soils to be used to construct the designated soil pads should be provided.

John D. Ashcroft Governor

LAI 0169

7. Adequate provisions for the continued availability of substitute equipment should be provided.

8. Given the longevity of the fill, an operating manual describing daily tasks and fill progression should be provided and made available to all present and future employees.

9. The engineering report and plan sheets should be revised to reflect any and all changes.

If you have any further questions please contact me at (314) 741-3241.

Sincerely,

David E. Bedan

David E. Bedan, Ph.D.
Director
Waste Management Program

DEB:MP:lh

cc: Mr. Ron Kucera, Deputy Director, DNR

2

PERMIT APPLICATION
AND ENGINEERING REPORT
FOR
WEST LAKE LANDFILL, INC.
SANITARY LANDFILL EXPANSION
BRIDGETON, MISSOURI

1985
84-075-1-001

BY
BURNS & McDONNELL
ENGINEERS-ARCHITECTS-CONSULTANTS
KANSAS CITY, MISSOURI

LAI 0170

WSTTC.ME

Burns & McDonnell
ENGINEERS - ARCHITECTS - CONSULTANTS

June 25, 1985

Mr. William McCullough, President
West Lake Landfill, Inc.
13570 St. Charles Rock Road
Bridgeton MO 63044

Permit Application and Engineering Report
West Lake Landfill, Inc. Sanitary Landfill
Expansion
Project 84-075-1-001

Dear Mr. McCullough:

We present herewith our revised report entitled Permit Application and Engineering Report for West Lake Landfill, Inc. Sanitary Landfill Expansion and related engineering drawings in accordance with our Agreement for Engineering Services. These documents were prepared in accordance with the Missouri Solid Waste Management Law, Rules and Regulations and the Waste Management Program's review comments. The Operations Manual will be completed shortly and forwarded under separate cover.

We wish to thank you and your staff for the assistance in preparation of these documents.

STATE OF MISSOURI
ROBERT M. ROBINSON
E-10948
REGISTERED PROFESSIONAL ENGINEER

Respectfully submitted,

BURNS & McDONNELL
ENGINEERING COMPANY

Robert M. Robinson

Robert M. Robinson, P.E.
Project Manager

RMR/gph

4800 EAST 63rd STREET, P.O. BOX 173, KANSAS CITY, MISSOURI 64141 • TEL: 816-333-4375 TWX: 910-771-3059

E-501 — 12.75

DEPARTMENT OF NATURAL RESOURCES

Division of Environmental Quality
P.O. Box 1368
Jefferson City, Missouri 65101

APPLICATION FOR OPERATING PERMIT

Solid waste disposal area or solid waste processing facility: (check only one)

- [X] Sanitary landfill
- [ ] Incinerator
- [ ] Compost plant
- [ ] Demolition landfill
- [ ] Transfer station
- [ ] Resource recovery plant
- [ ] Other (specify) _____

Name of Area or Facility: West Lake Landfill, Inc. Sanitary Landfill

Location: City: Bridgeton County: St. Louis

____ 1/4 ____ 1/4 ____ 1/4, Section: U.S. Survey 131 Township: 46N Range: 5E

Brief description of area or facility for which application for permit is made: (such as size or capacity) The sanitary landfill expansion is located in approximately a 33-acre area of the existing limestone quarry. Also, the landfill will extend over part of the current sanitary landfill.

Check type of waste proposed to be accepted:

- [X] Municipal solid waste
- [X] Bulky waste
- [X] Dead animals
- [X] Incinerator residue
- [X] Demolition and construction waste
- [X] Brush and untreated wood waste
- [ ] Septic tank pumpings
- [ ] Wastewater treatment plant sludges
- [ ] Other sludges (specify) _____
- [ ] Liquids (specify) _____
- [ ] Industrial process waste (specify) _____
- [ ] Hazardous wastes (specify) _____
- [ ] Other waste (specify) _____

Registered engineer or consulting engineering firm submitting plans:

Name: Burns & McDonnell Phone: (816) 333-4375
Address: P.O. Box 173
City: Kansas City State: Missouri Zip Code: 64141

OPERATOR: (Person principally responsible for the operation.)
Name: West Lake Landfill, Inc. Phone: (314) 739-1122
Address: 13570 St. Charles Rock Road
City: Bridgeton State: Missouri Zip Code: 63044

OWNER: (Legal owner of land or facility if different than operator.)
Name: (Same as Operator) Phone: _____
Address: _____
City: _____ State: _____ Zip Code: _____

If granted this permit, we the undersigned, agree to abide by the rules, regulations, orders and decisions of the Missouri Department of Natural Resources. We understand that in the event of any false or fraudulent information in the application, plans and data, or of failure to operate the area or facility in a proper and legal manner, the permit may be revoked after due notice from the Missouri Department of Natural Resources. We understand the permit is not transferable.

[signature] September 25, 1984
SIGNATURE OF OPERATOR DATE

[signature] September 25, 1984
SIGNATURE OF OWNER DATE

7

TABLE OF CONTENTS

	Page No.
LETTER OF TRANSMITTAL	
APPLICATION FOR OPERATING PERMIT	
TABLE OF CONTENTS	TC-1
LIST OF FIGURES	LF-1
INTRODUCTION	IN-1
PART I - EXISTING CONDITIONS	
A. CURRENT LANDFILL OPERATION	I-1
B. SOLID WASTE QUANTITIES AND TYPES	I-1
C. EXISTING LEACHATE PRETREATMENT SYSTEM	I-2
D. EXISTING GAS CONTROL SYSTEM	I-4
PART II - PROPOSED SANITARY LANDFILL EXPANSION DESIGN	
A. LOCATION AND DESCRIPTION	II-1
B. GEOLOGIC SETTING	II-2
C. PROPOSED LANDFILLING METHOD	II-4
D. SURFACE WATER DRAINAGE	II-6
E. LEACHATE MANAGEMENT	II-8
F. GAS CONTROL AND COLLECTION	II-19
PART III - SANITARY LANDFILL OPERATIONS	
A. OPERATING HOURS AND ACCESS CONTROL	III-1
B. LANDFILL EQUIPMENT	III-1
C. COVER MATERIAL	III-2
D. DAILY, INTERMEDIATE, AND FINAL COVER OPERATIONS	III-3
E. LITTER CONTROL	III-4
F. VECTOR CONTROL	III-5
G. DUST CONTROL	III-5
H. SAFETY PROGRAM	III-6
I. MONITORING	III-7
J. RECORD KEEPING	III-8
K. CLOSURE	III-8
PART IV - POST-CLOSURE PLAN	
A. PERIOD	IV-1
B. PROGRAM	IV-1
C. COSTS	IV-3
D. ESCROW REQUIREMENTS	IV-4
APPENDIX A - SOIL ANALYSES	
APPENDIX B - PERIMETER LEACHATE DRAINAGE ANALYSIS	
APPENDIX C - LETTER FROM ST. LOUIS MSD	
APPENDIX D - LETTER FROM EQUIPMENT COMPANY	

LAI 0171

LIST OF FIGURES

		Page No.
I-1	FLOW SCHEMATIC - EXISTING LEACHATE PRETREATMENT SYSTEM	I-3
II-1	FLOW SCHEMATIC - PROPOSED LEACHATE PRETREATMENT SYSTEM	II-15

INTRODUCTION

The purpose of this report is to provide that information necessary to obtain an operating permit for the proposed 33-acre expansion of the West Lake Landfill, Inc. Sanitary Landfill.

This report addresses the current landfill operation and the proposed design and operation of the landfill expansion.

* * * * *

PART I

EXISTING CONDITIONS

A. CURRENT LANDFILL OPERATION

West Lake Landfill, Inc. is currently operating a sanitary landfill in a 7-acre section of the company's limestone quarry located in U.S. Survey 131, Township 47 North, Range 5 East in St. Louis County, Missouri. Currently, the site entrance road is off St. Charles Rock Road, approximately 1 mile northwest of the intersection of St. Charles Rock Road and I-270. With the current quantity of waste being received, it is estimated the presently permitted area would be filled in mid 1985.

The sanitary landfill serves the twofold purpose of disposing of solid waste and reclaiming an existing limestone quarry. The operation of the landfill and the quarry have proven compatible through the use of available equipment, use of soil excavated from a proposed new quarry south of Old St. Charles Rock Road, and the availability of rock and equipment to maintain the landfill access roads during inclement weather.

B. SOLID WASTE QUANTITIES AND TYPES

The quantity of solid waste received at the sanitary landfill is estimated at 3,300 tons per week based on the operators' records of the volume (cubic yards) of waste and an assumed incoming density of 500 pounds per cubic yard. The landfill operates 5-1/2 days per week.

The type of waste accepted includes: municipal solid waste, bulky waste, small dead animals, and incinerator residue. Demolition and construction waste, brush, and wood waste are disposed of at West Lake's Demolition Landfill or their air curtain destructor located on property nearby. The following waste materials are not accepted for disposal at the landfill: hazardous wastes, bulk liquids, semisolids, sludges containing free moisture, highly flammable or volatile substances, full or partially full pesticide containers, pesticides, septic tank pumpings, raw sewage sludge and industrial process sludges.

C. EXISTING LEACHATE PRETREATMENT SYSTEM

The existing leachate pretreatment system (see Figure I-1 and Drawing No. 1) includes a 7.5-acre holding lagoon (30-million-gallon capacity), 5,000 gallon holding tank, lime precipitation unit (solids contact basin), aerated lagoon and two final settling lagoons. As shown in Figure I-1, leachate from all of the existing collection wells except the South Landfill well is pumped to the holding tank and then to the lime precipitation unit. Leachate from the South Landfill collection well and the existing collection ponds is pumped to the holding lagoon and then directly to the aerated lagoon. The pump at the holding lagoon has a capacity of approximately 40 gpm. The lime precipitation unit is rated at 50 gpm and currently operates approximately 50 percent of the time at 40 gpm.

Effluent from the pretreatment system (approximately 40 to 80 gpm) is discharged to the Metropolitan St. Louis Sewer District (MSD) sewer system. The effluent quality is regulated by Ordinance No. 4786 of MSD.

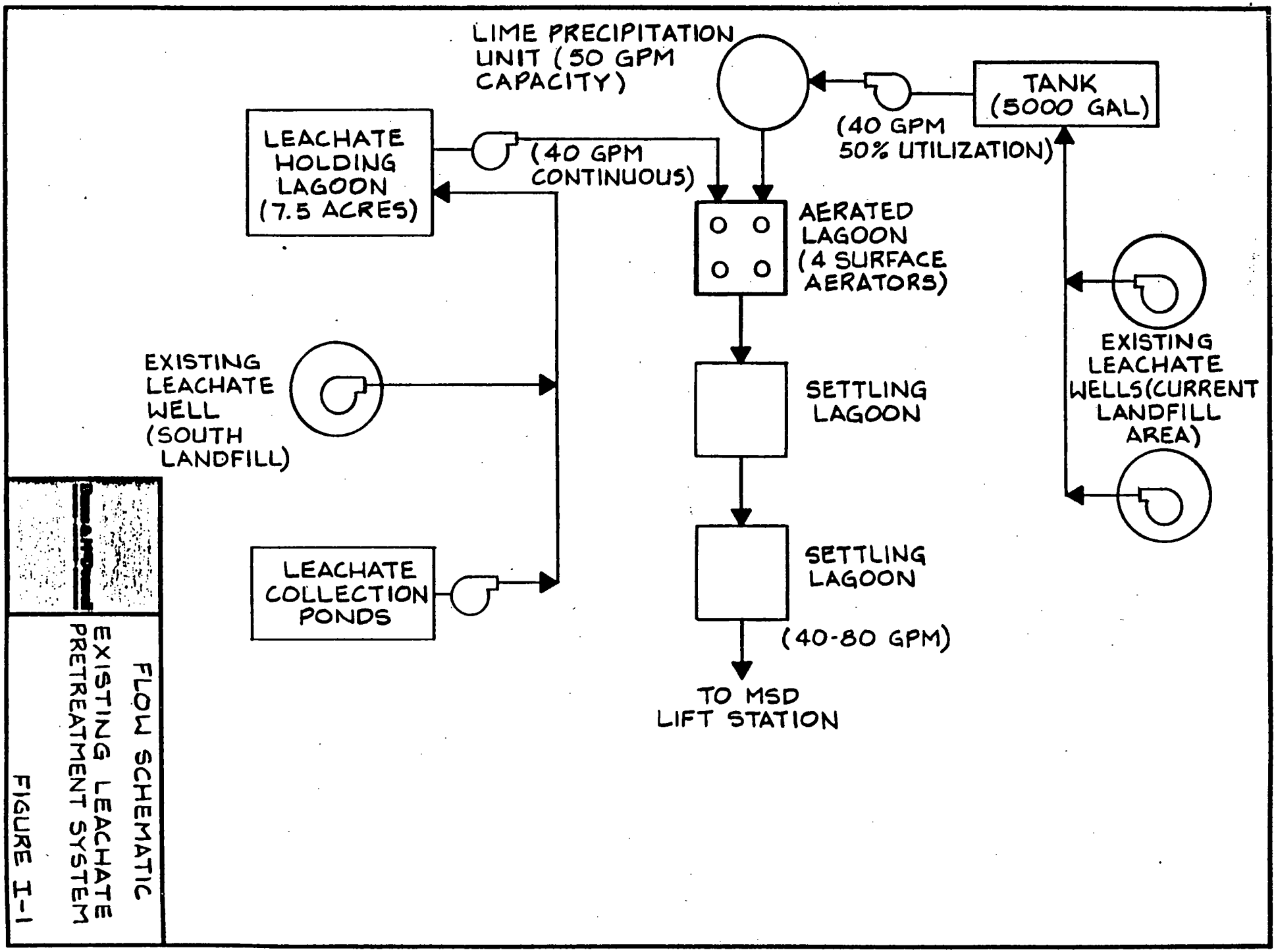

FLOW SCHEMATIC

EXISTING LEACHATE PRETREATMENT SYSTEM

FIGURE I-1

Instantaneous and 24-hour maximum allowable concentrations permitted by MSD are shown below compared with results of a grab sample of the treated leachate discharged to MSD in June, 1984.

	24-Hour Average (milligram/liter)	Instantaneous Maximum Allowable (milligram/liter)	West Lake Discharge to MSD (milligram/liter)
Antimony	0.5	1.5	<0.4
Arsenic	0.5	1.5	0.012
Barium	10.0	30.0	<0.4
Beryllium	10.0	30.0	<0.03
Cadmium	0.1	0.3	<0.03
Chromium (total)	5.0	15.0	<0.1
Copper	1.5	4.5	<0.1
Iron	15.0	45.0	0.2
Lead	0.2	0.6	<0.1
Mercury	0.03	0.09	0.0035
Nickel	2.0	6.0	<0.15
Selenium	0.2	0.6	0.009
Silver	0.5	1.5	<0.006
Zinc	3.0	9.0	<0.02
BOD	NL	300.0	30.0
COD	NL	NL	74.0
pH (units)	NL	5.5-10.5	10.1

Notes: Concentrations listed above are total substance (dissolved plus suspended).

NL = Not limited; NT = Not tested.

The above data indicates that the existing system is producing a discharge well within the quality standards established by MSD.

D. EXISTING GAS CONTROL SYSTEM

Currently gas collection and burning is done at a facility located on the east side of the existing landfill (see Drawing No. 1). This facility consists of two vacuum blowers and a gas burner. Gas is withdrawn from six existing gas collection wells located along the landfill perimeter in the

7 pg

APPENDIX B

PERIMETER LEACHATE DRAINAGE ANALYSIS

A. EVALUATE NEED FOR PERIMETER DRAINAGE OF LEACHATE

ASSUMPTIONS:

1. Annual precipitation = 37/year.

2. Evaporation = 35% of precipitation.

3. Field storage of solid waste and soil cover = 15% by volume.

4. Expansion landfill = 33 acres.

5. Annual landfill volume (including cover) = 400,000 yd^3

CALCULATIONS:

Net annual percolation = precipitation-evaporation-field storage

Evaporation = 0.35 (37 in/yr) = 13 in/yr.

Field storage =

$$400{,}000\ yd^3 \times .15 \times \frac{1}{33\ acres} \times \frac{acre}{43{,}560\ ft^2} \times \frac{27ft^3}{yd^3} \times 12\ \frac{in}{ft} = 13.5\ in.$$

Therefore, net annual percolation = 37-13-13.5 = 10.5 in.

LAI 0174

and

$$10.5 \frac{in}{yr} \times 2.54 \frac{cm}{in} \times \frac{yr}{8,760\ hr} \times \frac{hr}{3,600\ sec} = 8.5 \times 10^{-7} \frac{cm}{sec}$$

ANALYSIS:

1. Since v = ki and assuming hydraulic gradient (i) of 1, the net annual percolation ($v = 8.5 \times 10^{-7}$ cm/sec) can be drained through the landfill if the vertical permeability of the landfill is equal to or greater than 8.5×10^{-7} cm/sec. The cover soil has been classified as a clayey silt and should exhibit a minimum permeability of 10^{-6} cm/sec when placed as daily cover (i.e. without regard to optimum compaction). Therefore, ponding of water above the soil cover layers should be relatively minor (in terms of inches) and only during wet periods. Over the entire year no net accumulation of water should occur.

2. Since minor seasonal ponding may occur over the soil cover, the following measures are included in the proposed landfill design and operations to provide a factor of safety in the vertical drainage of leachate along the landfill boundary:

   a. Slope lifts away from the quarry wall at a minimum 3% for a minimum of 100 feet.

b. Remove cover soil within 25 feet of the quarry wall prior to placing additional refuse. This will eliminate the lower permeability

soil layer and allow more rapid leachate drainage along the quarry wall. Permeability of the compacted waste is estimated to be in the range of 10^{-5} to 10^{-3} cm/sec.

c. Provide chimney drains at 200-foot intervals along the quarry wall to assure that a downward drainage pathway for the leachate is provided in the boundary zone.

APPENDIX C

LETTER FROM ST. LOUIS MSD

METROPOLITAN ST. LOUIS SEWER DISTRICT

May 30, 1985

Mr. Robert M. Robinson, P.E.
Project Manager
Burns & McDonnell
Engineers-Architects-Consultants
4800 East 63rd St.
P.O. Box 173
Kansas City, MO 64141

RE: Old St. Charles Rock Road
260'± W. of Taussig
(West Lake Landfill, Inc.)
M.S.D. Reference No. P-10500

Dear Mr. Robinson:

We have investigated the capacities of the 10 inch sanitary sewer down stream of the West Lake Landfill site and found that 150 gallons per minute could be added to the 10 inch line before the line became overcharged.

If flows from your site were to exceed 150 gallons per minute, they could be accommodated at off-peak sanitary flow times between midnight and 6 a.m. Since there is storage capacity for leachate on your site, a higher flow in the off-peak hours could be accomplished. The off-peak flow should be limited to 300 gallons per minute.

If there are any questions, please call.

Yours truly,

Robert G. Butchko

Robert G. Butchko
Director of Engineering

RGB:JWT:vm

cc Jim W. Thompson

RECEIVED
JUN 3 1985
BURNS & McDONNELL
K.C. OFFICE

2000 HAMPTON AVENUE • ST. LOUIS, MISSOURI 63139-2979 • 768-6200

APPENDIX D

LETTER FROM EQUIPMENT COMPANY

Burns & McDonnell
ENGINEERS - ARCHITECTS - CONSULTANTS

July 3, 1985

Mr. Dave Bedan, Ph.D.
Director
Waste Management Program
Missouri Department of Natural Resources
P. O. Box 1368
Jefferson City MO 65102

West Lake Landfill Expansion
Permit Application
Project No. 84-075-1-001

Dear Dr. Bedan:

In accordance with Mr. Jerry Pratter's letter of July 3, 1985 to you, Burns & McDonnell is transmitting herewith three copies each of the revised Permit Application and Engineering Report, the Operations Manual and the Engineering Drawing for the above referenced landfill.

Sincerely,

Robert M. Robinson

Robert M. Robinson, P.E.
Project Manager

RMR/gph

Enclosure

cc: Mr. Jerry Pratter
The Stolar Partnership
Mr. William McCullough

EARLY DRAFT

4800 EAST 63rd STREET, PO BOX 173, KANSAS CITY, MISSOURI 64141 • TEL 816-333-4375 TWX 910-771-3059

From the office of

KANSAS CITY TESTING LABORATORY

2012 WEST 104TH STREET A.C. 913—648-2303
P. O. BOX 6323 SHAWNEE MISSION, KANSAS 66206

June 3, 1985

Burns & McDonnell Engineers
P. O. Box 173
Kansas City, Missouri 64141

Attention: Mr. Stathis Payiatakis

Reference: Westlake
B&M #84-075-1-001

REPORT OF PROCTOR DATA

Date Delivered: 5/29/85
KCTL Number: 3855

DESCRIPTION: Light brown slightly mottled clayey silt with a trace of iron nodules 98.2% passing 200 sieve

LOCATION: Hill sample

MOISTURE DENSITY RELATIONSHIP: ASTM D-698

OPTIMUM MOISTURE: 18.4%

MAXIMUM DRY UNIT WEIGHT: 105.9 pcf

Thank you for your continued interest in Kansas City Testing Laboratory.

Respectfully submitted,
KANSAS CITY TESTING LABORATORY

Diana Long

Diana Long

DL/mt

LAI 0172

KANSAS CITY TESTING LABORATORY

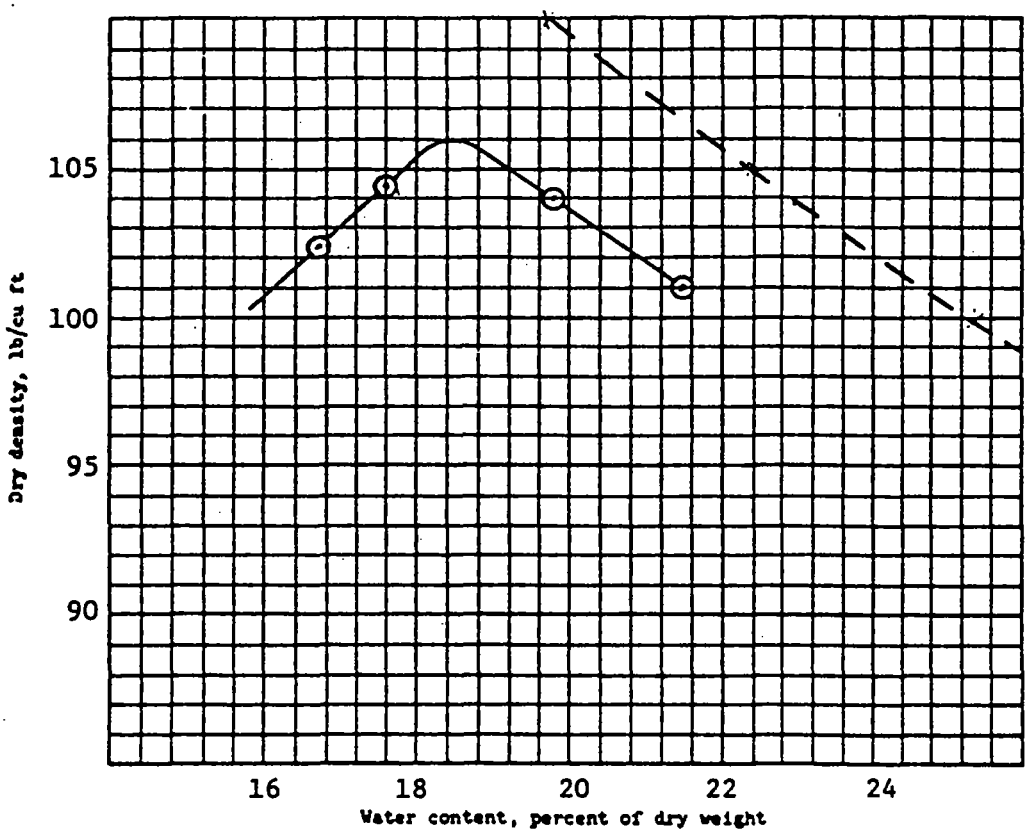

ASTM D-698 compaction test

25 blows per each of 3 layers, with 5.5 lb rammer and 12 inch drop. 4 inch diameter mold

Sample No.	Elev or Depth	Classification	G	LL	PL	% > No. 4	% > 3/4 in.
B			2.70*	34	25		
		*Assumed					

Sample No.	3855			
Natural water content, percent	27.0			
Optimum water content, percent	18.4			
Max dry density, lb/cu ft	105.9			

Remarks LIGHT BROWN	Project	WESTLAKE	
SLIGHTLY MOTTLED		BURNS & MCDONNELL ENGINEERS	
CLAYEY SILT WITH A	Area	HILL SAMPLE	
TRACE OF IRON NODULES	Boring No.		Date 5/29/85
98.2% PASSING 200 SIEVE	COMPACTION TEST REPORT		

LAI 0173

KANSAS CITY TESTING LABORATORY

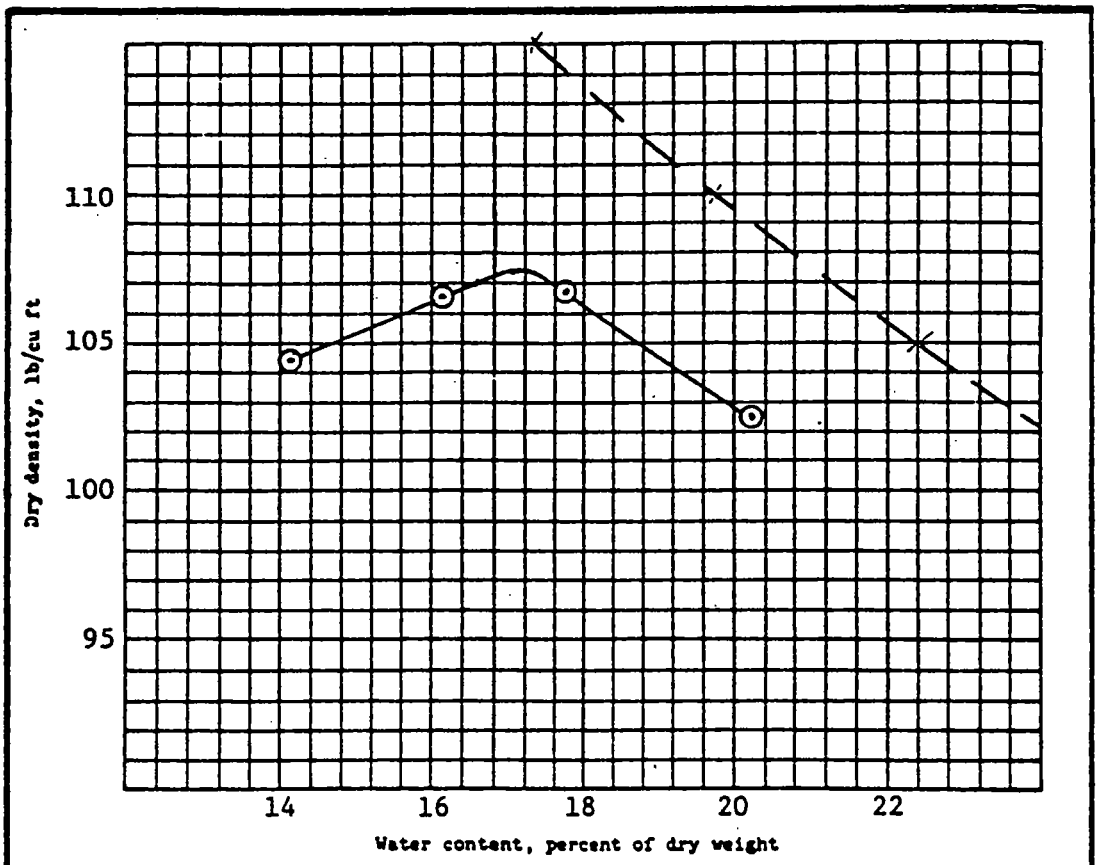

ASTM D-698 compaction test

25 blows per each of 3 layers, with 5.5 lb rammer and

12 inch drop. 4 inch diameter mold

Sample No.	Elev or Depth	Classification	G	LL	PL	% > No. 4	% > 3/4 in.
A		CL	2.70*	32	23		
		*Assumed					

Sample No.	3856			
Natural water content, percent	18.0			
Optimum water content, percent	17.1			
Max dry density, lb/cu ft	107.4			

Remarks TAN BROWN	Project	WESTLAKE	
CLAYEY SILT WITH A		BURNS & MCDONNELL ENGINEERS	
TRACE OF ROOT HAIRS	Area	BANK CUT	
99.6% PASSING 200	Boring No.		Date 5/29/85
SIEVE		COMPACTION TEST REPORT	

Burns & McDonnell
ENGINEERS - ARCHITECTS - CONSULTANTS

July 5, 1985

Mr. John D. Doyle, P.E.
Chief, Permit Section
Waste Management Program
Missouri Department of Natural Resources
P. O. Box 1368
Jefferson City MO 65102

West Lake Landfill Expansion
Project No. 84-075-1-001

Dear Mr. Doyle:

On May 14, 1985, I delivered to your office a report by Drilling Service Company relative to the grouting the company has done to control the seepage into the northeast corner of the West Lake Quarry in Bridgeton, Missouri. The grouting project was successful in eliminating the discharge from the location directly in the northeast corner of the quarry. Several seeps approximately 200 feet south of the northeast corner appears to have exhibited an increased flow. Drilling Services Company has undertaken a project to control these seeps along the east quarry wall by extending the grout curtain around the northeast corner of the quarry.

As I previously stated over the telephone, I do not concur with the Drilling Service Company's report which estimated the flow entering the northeast corner at 500 gpm. We still maintain that the potential flow is in the 100 gpm range. The water level in the two monitoring wells has remained relatively constant at 186 feet below the ground surface during the past month. The combined flow from the seeps along the east quarry wall was measured at approximately 100 gpm on July 1, 1985. In view of the water level in the monitoring wells having remained constant over the past month (a period of high rainfall), we believe the worst case condition is the 100 gpm inflow.

We expect Drilling Service Company will complete the grouting of the seeps along the east wall within the next few weeks.

Information relative to the capability for handling leachate from the current and proposed landfill expansion under the assumption that the grouting project were to fail is provided in the revised engineering report forwarded to the Waste Management Program on July 3, 1985. If you have any questions regarding the above, please advise.

Sincerely,

Robert M. Robinson

Robert M. Robinson, P.E.
Project Manager

RMR/gph
cc: William McCullough
Jerry Pratter
Terry Wittenberg

4800 EAST 63rd STREET, P.O. BOX 173, KANSAS CITY, MISSOURI 64141 • TEL: 816-333-4375 TWX: 910-771-3059

LAI 0175

4

Burns & McDonnell
ENGINEERS - ARCHITECTS - CONSULTANTS

September 25, 1985

Mr. Thomas R. Gredell, P.E.
Environmental Engineer
Waste Management Program
Missouri Department of Natural Resources
P O Box 1368
Jefferson City, MO 65102

West Lake Sanitary Landfill
Expansion
Project No. 84-075-1-001

Dear Mr. Gredell:

This letter is in reply to your correspondence to Mr. William McCullough, President, West Lake Landfill, Inc., dated September 5, 1985 commenting on the West Lake Landfill permit application and other matters. The response numbers correspond to the numbered questions and comments in your letter.

1A. Regarding the hydrogeologic investigation of the old West Lake Landfills, we would advise that there is very little difference between the depth of intermediate and shallow monitoring wells around the landfill sites. We believe there are already more than adequate number of intermediate depth monitoring wells along St. Charles Rock Road that would serve equally well to be called shallow monitoring points. We will be submitting shortly our plan for sampling and monitoring the wells around the landfills.

1B. Please be advised that piezometer number 83 is a deep monitoring point. There is apparently a typographical error on page III-9 of the preliminary phase report.

1C. Please be advised that the piezometers in the Earth City area were installed for a study conducted by Horner and Shifrin Engineering Company. The piezometers were originally installed to evaluate drainage and groundwater elevations prior to the construction of Earth City.

1D. We have found that existing piezometers adequately indicate water levels. They all appear to respond rapidly to any changes in groundwater elevations. At certain times, we have not been able to use a few wells that were located in drainage ditches that flood during high water elevations. We do not plan to use all the piezometers in the sampling and monitoring program. Only wells with adequate construction will be used for sampling.

2A & B. There are really no specific groundwater monitoring wells that monitor the current and proposed sanitary landfill with the possible

4800 EAST 63rd STREET, P.O. BOX 173, KANSAS CITY, MISSOURI 64141 • TEL: 816-333-4375 TWX: 910-771-3059

LAI 0176

exception of the water level measurement wells in the area of the grout curtain in the northeast corner of the large quarry. However, in accordance with our agreement on September 10, 1985, we will include funds in the post-closure monitoring program for sampling and analyzing samples from piezometers D-85, S-84 and I-68. In addition, one of the wells located in the area of the grout curtain in the northeast corner of the large quarry will also be sampled and analyzed as part of the post-closure monitoring program. The revised post-closure care costs are attached to this letter.

2C. As agreed in the meeting of September 10, 1985 in your office, we will not at this time consider the energy cost savings from the use of landfill gas, until such time as the gas utilization system is placed into service.

2D. The revised post-closure care costs are attached to this letter.

2E. The last paragraph on page II-18 of the engineering report explains why we do not believe that pretreatment will be required prior to discharge to MSD sewer. Should the volume of leachate increase to as much as 200 gallons per minute as a result of groundwater inflow, this leachate would have a low concentration of contaminants and not require pretreatment. Therefore, we do not forsee ever needing to pretreat more than 40 gallons per minute of leachate, which represents 20 percent of the maximum disposal quantity.

2F. The leachate disposal cost is based on MSD's sewer charge in accordance with Ordinance No. 5921, Appendix 2 that applies to non-residential properties. A copy of Appendix 2 is enclosed for your information.

2G. It was agreed at the meeting of September 10th that the toxic extraction procedure parameters including pesticides would be used in the future when analyzing for leachate.

3A. Please be advised that the subject sanitary landfill where leachate was entering the northwest side of the quarry, is the landfill with Permit No. 118906. This seepage is approximately at the location of the new leachate collection well shown on Drawing No. 2 at coordinate East 7120 and North 6780. The pumping of the new leachate collection well will assure that no leachate is migrating out of permitted sanitary landfill No. 118906, because the groundwater elevation is much higher than the leachate elevation which will be maintained within permitted sanitary landfill No. 118906.

3B. Please be advised that there is an existing leachate collection well in both of the existing permitted quarry landfills No. 118906 and 118909. You will note on Drawing No. 3 an existing leachate collection well at coordinate East 6830 and North 6280 which is located in permitted landfill No. 118906. The existing leachate collection well

located at coordinate East 6980 and North 6230 is located in permitted landfill No. 118909. We previously discussed the additional leachate collection well.

3C. We are showing the location of the Uncontrolled Site No. 1 on the aerial photo which is Drawing No. 1. This so-called uncontrolled site is located on the aluvium and not in a quarry area.

4A. We are submitting the report prepared by the drilling firm which shows the relationship of the monitoring wells and the grout seal.

4B. We provided a letter dated July 5, 1985 and addressed to John Doyle which we believe adequately addressed this matter.

4C. The drilling company's report has shown the location for several potential wells that can be drilled and developed into production wells so that the landfill operator can control the volume of groundwater entering the landfill should the grout curtain fail. The construction of the production wells would only be undertaken if the landfill operator was unsuccessful in being able to repair any problems with the grout curtain.

The landfill operator will monitor the water level in the wells in the northeast corner of the large quarry on a monthly basis and also maintain records on the leachate production. An evaluation of the change in the flow of the leachate and a significant fall of the water level would both be used to evaluate whether problems are occurring with the grout curtain.

It was not assumed that the water pumped out from behind the grout curtain could be discharged without the possibility of having to obtain a permit from the Water Pollution Control Program. That is why the report on page II-18 states that a water quality program would be implemented. In the unlikely event that such pumping would ever be necessary, the Water Pollution Control Program will be consulted regarding whether an NPDES permit is required.

5A. The compacted soil pad is not intended to serve as a landfill liner to prevent leachate movement. The leachate collection system will control the depth of leachate to prevent migration. The leachate collection well in the northeast corner of the quarry provides assurance that the leachate level can be properly controlled. The soil pad is designed to restrict the rate of groundwater flow into the quarry should the grout seal fail. This soil pad will make it possible to pump part of the groundwater before it enters the quarry and becomes contaminated with leachate.

The 12-foot thick pad of compacted soil that will be placed against the northeast wall will be compacted to 90% of standard proctor. All lifts placed under a height of 40-feet will be tested for proper compaction. All subsequent lifts will be compacted by the procedures established in placing the first 40-feet of pad.

The expected procedures (to be modified as necessary based on results obtained during placement of the initial 40-foot depth) are as follows: Loose 8-inch lifts of soil will be compacted by approximately 3 to 5 passes of a sheepsfoot roller. The interior pad slope should be maintained at approximately 1:1 or less, as required for field stability. The pad will be built up in approximate 10-foot lifts placed against the quarry wall prior to placing a refuse lift. The nuclear density testing procedure will be used to confirm compaction of the 8-inch lift of soil. One test will be conducted per lift.

5B. We believe it was agreed at our meeting on September 10, 1985 that it was not necessary to construct a soil pad against the north wall in the area of the fracture, because the fracture runs directly northwest into the adjacent permitted landfill No. 118909.

6. A copy of the NPDES permit application submitted to the Water Pollution Control Program on January 29, 1985 was provided to the Waste Management Program at the time of our meeting on September 10, 1985.

7. Please find 2 copies of the Daily Load Report form used by West Lake which you apparently did not receive in our earlier correspondence.

8. Please be advised that the geological survey has already received a copy of the report titled, Spring Grouting Summary. We are enclosing another copy of that report so that you will have a total of three. In addition, three copies of the drillers final report are provided herewith for your information.

We trust this response answers the questions you had included in your letter of September 6, 1985.

Sincerely,

Robert M. Robinson

Robert M. Robinson, P.E.
Project Manager

RMR/psh

Enclosures
cc: William McCullough, President
S. Gerome Pratter

3

APPENDIX 2

BONFILS WATERSHED, COLDWATER CREEK SUBDISTRICT,
ELLISVILLE SERVICE AREA, SPANISH LAKE NO. 1,
SUBDISTRICT NO. 150 (SUGAR CREEK), AND
ANY PROPERTY SERVED BY THE SYSTEM FOR
WHICH A RATE IS NOT OTHERWISE SPECIFIED

WASTEWATER SERVICE CHARGES

Billing Frequency: Semi-annually

	User Charge Portion	Capital Charge Portion	Total Rate
RESIDENTIAL PROPERTY			
Schedule A - $ per unit			
Rate 1 (Single Unit Residence)	$ 3.71/month	$ 0.24/month	$ 3.95/month
Rate 2 (Multiunit Residence)	$ 2.78/month	$ 0.18/month	$ 2.96/month
NON-RESIDENTIAL PROPERTY			
Schedule B			
Service Charge	$ 4.05/month	$ 0.11/month	$ 4.16/month
Volume Charge			
All Volume	$ 0.25/Ccf	$ 0.01/Ccf	$ 0.26/Ccf
Surcharges			
RSS	$82.00/Ton	$ 8.00/Ton	$ 90.00/Ton
RBOD	$39.30/Ton	$50.70/Ton	$ 90.00/Ton
RCOD	$19.65/Ton	$25.35/Ton	$ 45.00/Ton

Ccf = 100 cubic feet

LAI 0177

LANDFILL

Daily Load Report

Date:_____ _____

Charge Loads:_____

Loads: Amount:

Cash Loads:_____ _____

Construction Fill (yds.) _____

Burning Pit (yds.) _____

Sanitary Fill (yds.) _____

Total Yards:_____

Meeting between the Waste Management Program and Representatives of West Lake Landfill, Inc.
September 10, 1985

NAME	Affiliation
Michael Phillips	WMP, Permits
Tom Gradell	WMP
[illegible] D. Doyle	MDNR - WMP 751-324
VINCE JONES	WESTLAKE - CHAIRMAN of the Board
ROBERT M. ROBINSON	BURNS & McDONNELL
JERRY PRATTER	STOLAR PARTNERSHIP
Jim GUNN	" "
WALTER WITTENBERG	GREENSFELDER HEMKER ETAL
Wm. J. McCullough	President West Lake Landfill
Bob Hentges	WPC P-Permits
Carolyn deBoos	DNR-Counsel
Roy C. Henderson	Mo. DNR - WMP
Thomas J. Coy	DGLS - DNR - Rolla
DAVID BRIAN	MDNR - WMP

5

Burns & McDonnell
ENGINEERS - ARCHITECTS - CONSULTANTS

September 30, 1985

Mr. William McCullough, President
West Lake Landfill, Inc.
13570 St. Charles Rock Road
Bridgeton MO 63044

West Lake Sanitary Landfill
Project No. 84-075-1-001

Dear Mr. McCullough:

Regarding the August 23, 1985 letter from David E. Bedan, Ph.D., Director of the Waste Management Program, we are providing herewith several items that should be of assistance to West Lake's reply.

Attached is a document entitled "Waste Disposal Monitoring" which discusses the training, procedures and duties of the landfill manager and spotter relative to control of waste received at the landfill.

We suggest that West Lake Landfill, Inc. sample and analyze the leachate and leachate treatment sludge twice yearly for the hazardous waste characteristics. The analyses to date have not shown either to be a hazardous waste. A copy of the sludge analysis was provided to the Waste Management Program during the meeting on September 10, 1985.

Attached please find a contingency plan which West Lake Landfill, Inc. would need to implement in the future should testing indicate the leachate or leachate treatment plant sludge to be a hazardous waste.

If we can provide further information, please advise.

Sincerely,

Robert M. Robinson

Robert M. Robinson, P.E.
Project Manager

RMR/gph

Attachment

LAI 0178

4800 EAST 63rd STREET, P.O. BOX 173, KANSAS CITY, MISSOURI 64141 • TEL: 816-333-4375 TWX: 910-771-3059

HAZARDOUS WASTE CONTINGENCY PLAN
WEST LAKE LANDFILL, INC.

Introduction

West Landfill, Inc. collects and provides pretreatment for the leachate generated from the various landfill's units. Testing the leachate or sludge from the pretreatment plant have not shown either to be classified as a hazardous waste. However, in the event testing would find one or both to be a hazardous waste, West Lake Landfill, Inc. would need to implement the following contingency plan.

Pretreatment Plant Sludge Found Hazardous

1. Stop operation of pretreatment plant and pump all leachate to the large holding lagoon for treatment, aeration and discharge to MSD.

2. Conduct representative sampling of the sludge to confirm or disprove the finding that the sludge is hazardous.

3. Prepare plan to cleanup and properly dispose of any sludge found to be hazardous.

4. Conduct study to determine how pretreatment process can be altered so a hazardous waste sludge is not generated.

5. If the sludge cannot be made nonhazardous, then a decision will need to be made whether the lime treatment plant is an essential unit within the leachate pretreatment system. If it is, then the sludge handling and disposal system will need to be designed and operated to comply with hazardous waste regulations.

Leachate Found Hazardous

The leachate is pumped from various collection wells, therefore, in view of the fact that the leachate has never been found to test out as a hazardous waste, it is assumed that less than 50 gpm of the waste (leachate) stream has tested out a hazardous waste.

1. The hazardous waste (leachate) stream will be pumped directly to the lime precipitation pretreatment plant for treatment.

2. None of the hazardous waste leachate will be pumped to the large storage lagoon.

3. The pretreatment plant which discharges to MSD is exempt from obtaining a hazardous waste treatment permit.

4. A monthly testing program would be implemented to make sure the effluent and sludge from the pretreatment plant was not a hazardous waste. A new testing program would also be implemented to check the various leachate streams for hazardous waste characteristics.

Leachate and Sludge Found Hazardous

1. The hazardous waste leachate would be pumped directly to the lime precipitation pretreatment plant for treatment.

2. The sludge would be contained in a metal tank for storage.

3. Necessary arrangements will be made to file with the MDNR as a hazardous waste generator of sludge.

4. A plan will be developed for disposal of the sludge and meet sludge storage requirements.

5. The treatment process will be evaluated to seek ways to produce a non-hazardous sludge.

WASTE DISPOSAL MONITORING

Procedures and Duties:

The landfill manager will be responsible for all on-site operations. He will have knowledge of and experience in the principles of supervision and training and in all phases of landfill operations. Specifically, he will be knowledgeable of hazardous waste regulations with regard to screening hazardous waste from being accepted.

Day-to-day monitoring of waste arriving at the landfill site will be accomplished by the landfill spotter. The duties of the spotter will include the following:

1. Direct arriving traffic at the tipping area.
2. Observe wastes being dumped.
3. Detain transporter of barrels, containers and other wastes suspected of being hazardous waste.
4. Obtain information concerning the source of the waste.
5. Notify landfill manager.

The landfill manager then will:

1. Make decision to either accept or reject waste. (The waste will be rejected if the manager has reason to believe the waste is potentially hazardous.)
2. If the waste is rejected, advise transporter to return waste to the generator. In addition, rejections will be reported to MDNR promptly.

If an unauthorized waste is deposited on-site and not immediately detected, upon discovery the landfill manager will:

1. Advise transporter (if possible) and MDNR.
2. Isolate waste and store in metal roll-off container as soon as possible.
3. Consult with MDNR concerning final disposal.
4. Arrange to have the waste removed and disposed of only upon concurrence and instruction from MDNR.

Resources and Training:

The landfill manager will:

1. Have available a complete current set of Missouri regulations regarding the identification and listing hazardous waste and applicable references from U.S. EPA hazardous waste regulations.

2. Have available phone numbers of MDNR regional and central office contact people and a hazardous waste management consultant who can be contacted concerning specific wastes.

3. Attend a minimum of one seminar or conference emphasizing hazardous waste issues every two years.

The spotter will:

1. Maintain a list of special wastes that MDNR has authorized the landfill to accept including information on generator, type of waste and hauler.

2. Receive a minimum of one hour of training per quarter concerning hazardous waste identification and recognition. This training will be done by the landfill manager or a qualified hazardous waste management consultant.

2

THE STOLAR PARTNERSHIP
ATTORNEYS AT LAW
EXECUTIVE OFFICE BUILDING
515 OLIVE STREET - 17TH FLOOR
ST LOUIS, MO 63101
(314) 231-2800

TELEX: 880984
TELECOPIER: 231-1635

S JEROME PRATTER

H M STOLAR
(RETIRED 1984)

October 1, 1985

Mr. Thomas R. Gredell, P.E.
Environmental Engineer
Waste Management Program
Missouri Department of
National Resources
P.O. Box 1368
Jefferson City, Missouri 65102

Re: West Lake Sanitary Landfill Expansion

Dear Mr. Gredell:

In accordance with the understandings reached at our meeting of September 10, 1985 in Jefferson City we are submitting three copies of the following documents for your review:

1. Letter with attachments from Robert Robinson of Burns & McDonnell dated September 25, 1985 responding to your letter of September 5, 1985 to William McCullough.

2. Part IV Post-Closure Plan prepared by Burns & McDonnell.

3. Engineering drawings 1 and 2 dated June 25, 1985, as revised by Burns & McDonnell.

4. Spring Grouting Summary prepared by Drilling Services Company (1 additional copy).

5. Second Spring Grouting Summary prepared by Drilling Services Company (3 copies).

6. Letter from Robert Robinson of Burns & McDonnell to William McCullough dated September 30, 1985 with Waste Disposal Monitoring and Hazardous Disposal Monitoring attachments.

7. Proposed Permit Conditions.

LAI 0179

As you already know your immediate attention to this matter would be most appreciated. We look forward to hearing from you shortly.

Yours very truly,

S. Jerome Pratter

S. Jerome Pratter

SJP:md

Enclosures

cc: Vince Jones
William McCullough

THE STOLAR PARTNERSHIP
ATTORNEYS AT LAW
EXECUTIVE OFFICE BUILDING
515 OLIVE STREET - 17TH FLOOR
ST LOUIS, MO. 63101
(314) 231-2800

TELEX: 880984
TELECOPIER: 231 1635

S JEROME PRATTER

H M STOLAR
(RETIRED 1984)

October 2, 1985

Mr. Vince Jones
Archdiocesan Offices
4140 Lindell Boulevard
St. Louis, Missouri 63108

Re: West Lake Landfill Inc.

Dear Vince:

Enclosed is a somewhat abbreviated version of the package which was sent this morning to the Missouri Department of Natural Resources ("MDNR").

Terry, Robbie, Jim and I all reviewed and approved the critical Permit Conditions enclosure. Our hope is that by providing the MDNR staff with the Permit Conditions we can speed up the process since they normally draft them as part of the permit.

We shall be in touch with MDNR soon to encourage their prompt attention to the West Lake Landfill Permit.

Please call if I can be of further assistance.

Yours very truly,

Jerry

S. Jerome Pratter

SJP:md

Enclosure

cc: William McCullough
Terry Wittenberg
Robert Robinson
James Gunn

LAI 0180

GREENSFELDER, HEMKER, WIESE, GALE & CHAPPELOW, P.C.
ATTORNEYS AT LAW
1800 EQUITABLE BUILDING
10 SOUTH BROADWAY
SAINT LOUIS, MISSOURI 63102
(314) 241-9090
TELEX 910-761-0410
TELECOPIER (314) 241-8624

JOHN J BANNAR, JR
DENNIS G COLLINS
JOHN E DOOLING, JR
GARY A EBERHARDT
J ROGER EDGAR
RALPH EDWARDS
MARK R GALE
EDWARD M GOLDENHERSH
MARK H GORAN
ANDREW F GREENSFELDER
JAMES L HAWKINS
F ROGER HEMKER
FORREST M HEMKER
JOSEPH D LEHRER
GEORGE J. LEONTSINIS
LARRY B LUBER
JOSEPH R MEIVES
GERALD R ORTBALS
THOMAS L STORY
WILLIAM J TRAVIS
MICHAEL E WILSON
WALTER L WITTENBERG
CAROLYN G WOLFF

KENT CHAPPELOW
EDWARD GREENSFELDER
OF COUNSEL

EDWARD L WIESE
(1907-1983)

MICHAEL D ARM
KATHLEEN BOOZANG BASSO
VIRGINIA C CARMODY
EDWARD A. CHOO
SHARON F DAILY
JEFFREY T. DEMERATH
JOHN W DILLANE
MICHAEL D GARNER
RICHARD R HARDCASTLE, III
DAVID M HARRIS
WILLIAM A. HELLMICH
ALFRED HENNEBOEHLE
PAUL D KINGSOLVER
LAURA J KIPNIS
MELANIE LAPIDUS
JEFFREY S MORGAN
JOHN W MOTICKA
JOSEPH B PERELES
THOMAS E PULLIAM
GERALD M RICHARDSON
JOHN W SCHAEFER
DANIEL J SCHWARTZ
ROBIN A SONNELAND
JOHN H. SWOBODA
TIMOTHY R THORNTON
JAMES G WIEHL
H. THEODORE ZINK JR

November 1, 1985

Mr. John Doyle, P.E.
Waste Management Program
Missouri Department of
Natural Resources
Post Office Box 1368
Jefferson City, Missouri 65102

RECEIVED
NOV 5, 1985
WASTE MANAGEMENT
PROGRAM

Re: West Lake Quarry Permit Application

Dear John:

There is enclosed herewith a xerox copy of short form of lease with respect to the West Lake property. As indicated on the copy, the lease was executed in 1971 and recorded in St. Louis County, Missouri by the Recorder of Deeds at Book 6527, page 141. As you will notice, this lease does not contain any of the economic terms of the lease which are contained in a long form lease dated June 30, 1971 referred to on the last page of the short form lease.

As I understand it from Jerry Pratter of Jim Gunn's office, this will suffice for your needs. If you have any further requirements, please do not hesitate to call me.

Best regards.

Sincerely,

Terry Wittenberg

Walter L. Wittenberg

WLW:njt

Enclosure

LAI 0181

Working Copy 8

JOHN ASHCROFT
Governor

FREDERICK A. BRUNNER
Director

STATE OF MISSOURI
DEPARTMENT OF NATURAL RESOURCES

Division of Energy
Division of Environmental Quality
Division of Geology and Land Survey
Division of Management Services
Division of Parks and
Historic Preservation

OFFICE OF THE DIRECTOR
1915 Southridge Drive
P.O. Box 176
Jefferson City, Missouri 65102
Telephone 314-751-4422

CERTIFIED MAIL P196186810

November 18, 1985

Mr. William McCullough, President
West Lake Landfill, Inc.
13570 St. Charles Rock Road
Bridgeton, MO 63044

Dear Mr. McCullough:

RE: Solid Waste Disposal Area Operating Permit #118912.

An Application for Operating Permit has been filed with the Missouri Department of Natural Resources requesting a permit to operate a sanitary landfill designated in the application as the West Lake Landfill, Inc. Sanitary Landfill. The application was filed by West Lake Landfill, Inc. and submitted to the Department of Natural Resources for review and approval. The application includes engineering plans, and specifications, operating procedures and subsequent correspondence or amendments for the subject facility. The application has been prepared by Burns & McDonnell. The application has been reviewed for compliance with the Missouri Solid Waste Management Law (Section 260.200 to 260.245, RSMo, 1978) and the Missouri Solid Waste Management Rules and Regulations.

In accordance with Section 260.205, Paragraph 2, RSMo, 1978, the Missouri Department of Natural Resources hereby approves the application and issues Permit Number 118912 to West Lake Landfill, Inc. for the operation of a solid waste disposal area set forth in the application as the West Lake Landfill, Inc. Sanitary Landfill. This permit applies only to that tract of land of approximately 52 acres, as described by the engineering plans, specifications and operating procedures submitted to the department. This permit is issued for a period of ten (10) years. This permit expires at midnight on November 18, 1995, unless a complete application for a permit is submitted to the Waste Management Program at least 12 months before the expiration date. If an application for a permit is made prior to November 18, 1994, then this permit and its conditions remain in effect

until the effective date of a new permit, or effective date of denial of the application for a new permit. The department shall review this permit approximately five (5) years after the date of issuance to determine the compliance status of the landfill and shall modify the permit as necessary to assure that the facility continues to comply with applicable requirements of the provisions of Sections 260.200 to 260.245 RSMo and the rules and regulations adopted thereunder.

The final approved engineering plans, specifications and operating procedures described below are attached hereon and made an official part of this permit:

1. The completed Application for Operating Permit form, dated September 25, 1984, designating West Lake Landfill, Inc. as both the owner and operator of the facility.

2. The engineering report entitled Permit Application and Engineering Report for West Lake Landfill, Inc. Sanitary Landfill Expansion Bridgeton, Missouri, 1985; prepared by Burns & McDonnell; received July 5, 1985.

3. The operations manual entitled West Lake Landfill, Inc. Sanitary Landfill Expansion Operations Manual, 1985; prepared by Burns & McDonnell; received July 5, 1985.

4. Plan Sheets entitled West Lake Landfill, Inc. Sanitary Landfill, Bridgeton, Missouri, 1984; prepared by Burns & McDonnell, including: drawing 1, revision 1; drawing 2, revision 1; and drawings 3 through 5 (no revisions).

5. Letter dated September 25, 1985, to Mr. Thomas R. Gredell, P.E. from Mr. Robert M. Robinson, P.E. (including attachments) providing additional details of the landfill design and operation.

6. Document entitled Part IV, Post Closure Plan; received October 3, 1985; replaces the section of the engineering report entitled Part IV, Post Closure Plan.

7. Letter dated October 1, 1985, to Mr. William McCullough from Mr. Robert M. Robinson, P.E. (including attachments), received October 3, 1985, providing details of the Hazardous Waste Contingency Plan and the Waste Disposal Monitoring Plan.

8. Letter dated March 14, 1985, to Mr. Thomas R. Gredell, P.E. from Mr. Robert M. Robinson, P.E. providing additional details of the landfill design and operation.

9. Report entitled Spring Grouting Summary, West Lake Landfill, Inc. Bridgeton, Missouri, received April 30, 1985; prepared by Drilling Service Company; dated February 15, 1985, through April 18, 1985.

10. Report entitled Spring Grouting Summary, Grout Curtain #2, West Lake Landfill, Inc. Bridgeton, Missouri, received October 3, 1985; prepared by Drilling Service Company; dated May 23, 1985, through August 2, 1985.

11. Letter dated July 5, 1985, to Mr. John D. Doyle, P.E. from Mr. Robert M. Robinson, P.E. providing additional information concerning the grouting reports.

12. Report entitled Hydrogeologic Investigation, West Lake Landfill, Preliminary Phase Report, January, 1985; prepared by Burns & McDonnell; received March 18, 1985.

13. Report entitled Interim Report on the Proposed Groundwater Sampling Program for the Primary Phase of the Hydrogeologic Investigation, West Lake Landfill, St. Louis County, Missouri, October 1985; received October 8, 1985.

Approval of the application and issuance of this permit is given with the explicit understanding that the sanitary landfill will be developed and operated in compliance with the approved plans, specifications and operating procedures, with the conditions of the permit, with the Missouri Solid Waste Rules and Regulations, and in accordance with the Missouri Solid Waste Management Law. This permit is not to be construed as compliance with any existing local ordinances or zoning requirements. This permit for operation of a solid waste disposal area is issued only to the person named in the application and shall not be transferable.

Conditions

The following conditions are an integral part of the permit. Compliance with these conditions shall, in part, determine compliance with the permit.

1. This permit, Solid Waste Disposal Area Operating Permit #118912, encompasses the proposed expansion area and additional solid waste fill by West Lake Landfill, Inc. over the disposal areas permitted under Solid Waste Disposal Area Operating Permit Numbers 118906 and 118909 issued to West Lake Landfill, Inc. This document supersedes and replaces the previous permits and permit documents.

2. West Lake Landfill, Inc. shall establish and maintain an escrow fund for the purpose of providing post-closure care and maintenance of the landfill. The amount and manner of maintaining this fund shall be as described in the approved permit documents.

$20,000
1/2 of

A. Fifty percent of the first yearly cost of this fund shall be deposited in this fund prior to acceptance of solid waste.

B. The existence and maintenance of this fund shall be verified to the department by the permittee prior to acceptance of solid waste. The maintenance of this fund shall be verified to the department annually prior to the anniversary date of establishment of the fund, in writing, by the financial institution wherein this fund is deposited.

when can deposit be made. ??

3. An environmental assessment of the entire landfill site shall be initiated by West Lake Landfill, Inc. or any successor or assign ("hereinafter West Lake") immediately after the issuance of this permit. This assessment, including hydrogeologic investigation, shall be completed by November, 1986, and shall be used as the basis for the development of a monitoring program and feasibility study to assess necessary remedial action. The conclusions of the feasibility study shall be submitted to the department within two years after the issuance of this permit. Implementation of necessary remedial action will be undertaken by West Lake in accordance with reasonable design and construction scheduling. Additional groundwater monitoring requirements will be required, based on review of the hydrogeologic investigation and feasibility study.

?? Not transferable ??

may

4. Initial training of the waste inspector (spotter) shall be provided so that he/she is able to adequately perform the duties as described in the permit documents. At a minimum, the initial training for this employee shall include:

Refer to provide this and one document

A. Familiarization with 10 CSR 80-3.010(3), solid waste excluded.

B. Identification and recognition of unacceptable wastes, as described in 10 CSR 80-3.010(3).

C. Familiarization with the necessary procedures to obtain approval of special waste disposal requests.

D. Provision of a list of all special wastes approved for disposal by the department.

?? 5. Intermediate cover is not required until the fill is above the quarry rim, as proposed in the approved permit documents.

6. Leachate and sludge from leachate treatment shall be collected, treated and disposed of as per the approved permit documents.

A. Leachate shall be treated and disposed of in accordance with all applicable water quality laws, rules, regulations, and policies as enforced by the Water Pollution Control Program, Missouri Department of Natural Resources.

B. West Lake Landfill, Inc. shall two times a year test the leachate and leachate treatment sludge for hazardous waste characteristics pursuant to 10 CSR 25-4.010 (2 through 5) and submit the results of such tests within sixty days to Missouri Department of Natural Resources. If hazardous wastes are detected in the leachate or sludge West Lake Landfill, Inc. shall implement proper handling of such hazardous wastes in accordance with the Missouri Hazardous Waste Management law, Rules and Regulations.

Refer to do written check 12-9-85

C. Sludge from the on-site leachate treatment system is acceptable for disposal at the landfill, unless tested to be a characteristic hazardous waste as per condition 6B.

D. Static leachate levels in the collection sumps in the unfilled area of the quarry, as shown in the approved permit documents, will be maintained at a level less than 30 feet above the base of the sump. The leachate level shall be checked monthly, recorded and made available upon department request.

Refer to ask for clarification

E. Static leachate levels in the previously filled areas of the quarry, as shown on the approved permit documents, shall be maintained at a level less than 50 feet above the base of the sump. The leachate level shall be checked monthly, recorded and made available upon department request.

Not sure where measurement should be from, top

7. A. Groundwater monitoring shall be required as per the attached document entitled Monitoring Program for the West Lake Landfill, Inc. Sanitary Landfill. The wells shall be sampled within 30 days of issuance of the permit. The first sample will be used as a background sample and should be analyzed for the extended list of parameters, as if it were an annual analysis.

B. Three groundwater monitoring wells have been installed in the area of the grout curtain in the northeast corner of the large quarry. Two wells were installed during the placement of the initial grout curtain and were designated as groundwater monitoring wells (GWMW) #4/III and (GWMW) #14/III in the application for operating permit. The third well was installed during the placement of grout curtain #2 and was designated as groundwater monitoring well (GWMW) #17/IV in the application for operating permit. The water level in these wells shall be monitored monthly, recorded, and made available upon department request.

C. All three wells will be monitored, unless the department is requested to reevaluate the monitoring program. If requested and approved, one or more of the wells can be eliminated from the sampling program if hydraulic communication between the wells is verified.

D. Additional sampling points may be added to the monitoring program depending on the results of the hydrogeologic investigation (See Condition #4).

8. The following previously approved special wastes are approved for disposal under permit #118912:

A. Fly ash derived from a coal burning industrial boiler, generated by McDonnell Douglas Corporation; 400 tons per month; approved November 1, 1984.

B. Incinerator ash derived from municipal refuse incineration, generated by McDonnell Douglas Corporation; 800 cubic yards per month; approved November 1, 1984.

A special waste disposal request will have to be submitted to, and approved by, the Waste Management program prior to accepting any other special waste as per 10 CSR 80-3.010(3).

Bill Conway to give me a copy

9. Each eight inch lift of the twelve foot wide pad in the northeast corner should be tested for soil density to confirm that a minimum compaction of 90% of the standard proctor density is obtained.

10. All surface water discharges shall be made in accordance with all applicable water quality laws, rules, regulations and policies as enforced by the Water Pollution Control Program, Missouri Department of Natural Resources.

11. Methane gas shall be vented or burned in accordance with all applicable air quality laws, rules, regulations, and policies as enforced by the appropriate air pollution control regulatory agency.

12. Department review and approval of any planned final use is required prior to implementing a designated, commercial, final use of the site.

13. Within six months of the date of issuance of the permit, two copies of a final, comprehensive engineering report shall be submitted to the Waste Management Program. This report shall incorporate all present design and operating information into one reference manual detailing the final approved plans and specifications for the design and operation of the proposed sanitary landfill. This report shall incorporate all information required by regulation, eliminate all contradictory information, and include all revisions and additions to the original application for operating permit, as approved.

Facility Description

The proposed sanitary landfill is located in U.S. Survey 131, Township 46 North, Range 5 East, St. Louis County, Missouri. The proposed site consists of a total of approximately 214 acres of which approximately

52 acres will be utilized for the sanitary landfill. The types of wastes to be accepted will consist of municipal solid waste, bulky waste, dead animals, demolition and construction waste, and brush and untreated wood waste. Approval to dispose of special wastes other than the wastes listed above (except hazardous wastes, explosives, or radioactive material) will be considered on a case-by-case basis, as provided in 10 CSR 80-3.010(3). The area method of sanitary landfill operation will be utilized. The fill heights and area locations are to be completed as shown on the approved engineering plans and specifications and maintenance of the area shall be provided in accordance with the post-closure maintenance plan. Upon completion of the landfill, it will be used for as yet undesignated commercial operations.

All fencing, gates, equipment, maintenance buildings, all-weather access roads, signs, surface-water control devices, operating equipment, standby equipment and other necessary appurtenances shall be provided as per the final approved plans, specifications and operating procedures. The plans, specifications and operating procedures described above have been examined as to sanitary features of design which might affect the operation of the solid waste disposal area as a sanitary landfill.

Modification and Termination of Permit

The department reserves the right to revoke or modify this permit after due notice:

1. If it is found that the holder of the permit is in violation of the Missouri Solid Waste Management Law, or the Missouri Solid Waste Management Rules and Regulations;

2. For failure to operate in accordance with the approved plans, specifications and operating procedures;

3. For creating a public nuisance, health hazard or causing environmental pollution;

4. For failure to comply with any and all conditions of the permit, as described herein;

5. If it is found that additional construction or alteration of the solid waste disposal area is necessary to comply with any and all rules and regulations promulgated in accordance with the Missouri Solid Waste Management Law;

6. If it is determined a facility has not been operated for a period of one year.

This permit will become void after notice to the Department by the person named in the permit that said person has discontinued operation of the disposal area.

Upon initiation of operation at your landfill, you will have indicated your acknowledgement and acceptance of this permit and conditions of the permit. If you have any questions, please contact the Waste Management Program at (314) 751-3241 or P. O. Box 176, Jefferson City, MO 65102.

Sincerely,

DEPARTMENT OF NATURAL RESOURCES

Frederick A. Brunner, Ph.D., P.E.
Director

FAB:mpl

cc: East-West Gateway Regional Planning Commission
Mr. Robert M. Robinson, P.E.

MONITORING PROGRAM FOR THE

WEST LAKE LANDFILL, INC. SANITARY LANDFILL

A. Monitoring Points

The monitoring points (both surface and subsurface) listed below are those for which your landfill is responsible for sampling and analyzing. Both the current name, number or designation (as according to our records) and a new four digit number are listed for each point. The four digit number is that which will appear on the computer reporting forms (see section E) and should be used in any future correspondence.

PERMIT NUMBER	CURRENT MONITORING DESIGNATION	NEW FOUR DIGIT MONITORING NUMBER
118912	GWMW 4/III	1201
118912	GWMW 14/III	1202
118912	GWMW 17/IV	1203

B. Frequency

All monitoring points are to be sampled on a quarterly basis. An annual sample and analysis for an extended list of parameters must be conducted by the landfill. During the quarter that the annual analysis must also be conducted, two separate samples need not be collected (i.e. one sample can be collected for both quarterly and annual parameters). However, results for the quarterly parameters must still be submitted by the end of the following month. Landfills are given approximately 90 days to submit results for the annual analysis. (The Department also conducts this annual analysis). Below are listed the months during which samples must be taken and reports submitted.

QUARTER	SAMPLES TAKEN	REPORTS SUBMITTED
1st	February	March
2nd	May	June (Quarterly Results Only) August (Annual Results Only)
3rd	August	September
4th	November	December

C. Parameters

Below are listed the parameters that samples are to be analyzed for during the quarterly and annual/background sampling. (Background sampling is to be performed prior to initiating operation of a new landfill or newly permitted areas where the monitoring points are located.) Annual sampling is to be conducted during the second quarter.

ANNUAL/BACKGROUND LIST	QUARTERLY LIST
pH	chloride
conductivity	COD
cobalt	iron
total dissolved solids	pH
chloride	conductivity
sulfate	total dissolved solids
fluoride	water level in the well - report depth from ground surface to the water, and the depth of water.
total hardness - calculated	
barium	
boron	
cadmium	
chromium	
copper	
color } Observation Only	
odor } Observation Only	
calcium	
sodium	
COD	
ammonia as N	
nitrate and nitrate as N	
total phosphorus	
mercury	
iron	
arsenic	
lead	
selenium	
silver	
manganese	
zinc	
Water level in the well - report depth from ground surface to the water, and the depth of water.	
magnesium	

ALL METALS ARE DISSOLVED.

D. Collection, Preservation and Analysis

(See the attached Technical Bulletin for the correct procedures. Note that bailers should be rinsed with distilled water between each sample collection. Water levels are to be recorded prior to bailing. Failure to follow these procedures will void the monitoring report.)

E. Report Form

To insure that all required information is submitted and to remove any confusion between the Waste Management Program, the landfill, and private laboratories, reporting forms from the program will be sent to the landfill at the beginning of each quarter, in the spring for the annual sampling, and for background samples when new points are designated. (Attached is an example of such a form). These forms are to be completed by the collector and the lab performing the analysis. The original is to be sent to the address noted on the lower right hand corner. A report need not be sent to the regional office.

The items listed below will be completed by the department prior to your receiving the form.

1. Quarter Number
2. Site Name
3. Monitoring Point Number
4. When analysis is to be completed.
5. When results are to be forwarded.

The form indicates the sensitivity of analysis for each parameter. Note that measurements are reported in units of mg/l or ug/l depending on the parameter. IF A MONITORING POINT IS DRY REPORT THE WATER LEVEL IN THE WELL AS 0.0 (DO THIS FOR SURFACE POINTS WHICH

ARE ALSO DRY). DO NOT LEAVE THE FORM BLANK. IF SURFACE POINTS CONTAIN WATER LEAVE THE WATER LEVEL PARAMETER BLANK. ANY INCOMPLETE FORM WHICH IS SUBMITTED WILL RENDER THE REPORT VOID AND WILL NECESSITATE REPEATING THE SAMPLING. THE SECTIONS LABELED COMMENTS SHOULD INCLUDE A LIST OF SAMPLE PRESERVATIVES IF THERE ARE DEVIATIONS FROM THOSE NOTED IN THE TECHNICAL BULLETIN.

ONLY ONE SAMPLE NEEDS TO BE TAKEN DURING MAY; HOWEVER, QUARTERLY PARAMETER RESULTS NEED TO BE SUBMITTED DURING JUNE. THE ANNUAL RESULTS NEED NOT BE SUBMITTED UNTIL AUGUST. LANDFILLS WILL RECEIVE TWO FORMS DURING THE SECOND QUARTER FOR THIS PURPOSE.

JOHN ASHCROFT
Governor

FREDERICK A. BRUNNER
Director

STATE OF MISSOURI
DEPARTMENT OF NATURAL RESOURCES

Division of Energy
Division of Environmental Quality
Division of Geology and Land Survey
Division of Management Services
Division of Parks and
Historic Preservation

OFFICE OF THE DIRECTOR
1915 Southridge Drive
P.O. Box 176
Jefferson City, Missouri 65102
Telephone 314-751-4422

CERTIFIED MAIL P196186810

November 18, 1985

Mr. William McCullough, President
West Lake Landfill, Inc.
13570 St. Charles Rock Road
Bridgeton, MO 63044

Dear Mr. McCullough:

RE: Solid Waste Disposal Area Operating Permit #118912.

An Application for Operating Permit has been filed with the Missouri Department of Natural Resources requesting a permit to operate a sanitary landfill designated in the application as the West Lake Landfill, Inc. Sanitary Landfill. The application was filed by West Lake Landfill, Inc. and submitted to the Department of Natural Resources for review and approval. The application includes engineering plans, and specifications, operating procedures and subsequent correspondence or amendments for the subject facility. The application has been prepared by Burns & McDonnell. The application has been reviewed for compliance with the Missouri Solid Waste Management Law (Section 260.200 to 260.245, RSMo, 1978) and the Missouri Solid Waste Management Rules and Regulations.

In accordance with Section 260.205, Paragraph 2, RSMo, 1978, the Missouri Department of Natural Resources hereby approves the application and issues Permit Number 118912 to West Lake Landfill, Inc. for the operation of a solid waste disposal area set forth in the application as the West Lake Landfill, Inc. Sanitary Landfill. This permit applies only to that tract of land of approximately 52 acres, as described by the engineering plans, specifications and operating procedures submitted to the department. This permit is issued for a period of ten (10) years. This permit expires at midnight on November 18, 1995, unless a complete application for a permit is submitted to the Waste Management Program at least 12 months before the expiration date. If an application for a permit is made prior to November 18, 1994, then this permit and its conditions remain in effect

until the effective date of a new permit, or effective date of denial of the application for a new permit. The department shall review this permit approximately five (5) years after the date of issuance to determine the compliance status of the landfill and shall modify the permit as necessary to assure that the facility continues to comply with applicable requirements of the provisions of Sections 260.200 to 260.245 RSMo and the rules and regulations adopted thereunder.

The final approved engineering plans, specifications and operating procedures described below are attached hereon and made an official part of this permit:

1. The completed Application for Operating Permit form, dated September 25, 1984, designating West Lake Landfill, Inc. as both the owner and operator of the facility.

2. The engineering report entitled Permit Application and Engineering Report for West Lake Landfill, Inc. Sanitary Landfill Expansion Bridgeton, Missouri, 1985; prepared by Burns & McDonnell; received July 5, 1985.

3. The operations manual entitled West Lake Landfill, Inc. Sanitary Landfill Expansion Operations Manual, 1985; prepared by Burns & McDonnell; received July 5, 1985.

4. Plan Sheets entitled West Lake Landfill, Inc. Sanitary Landfill, Bridgeton, Missouri, 1984; prepared by Burns & McDonnell, including: drawing 1, revision 1; drawing 2, revision 1; and drawings 3 through 5 (no revisions).

5. Letter dated September 25, 1985, to Mr. Thomas R. Gredell, P.E. from Mr. Robert M. Robinson, P.E. (including attachments) providing additional details of the landfill design and operation.

6. Document entitled Part IV, Post Closure Plan; received October 3, 1985; replaces the section of the engineering report entitled Part IV, Post Closure Plan.

7. Letter dated October 1, 1985, to Mr. William McCullough from Mr. Robert M. Robinson, P.E. (including attachments), received October 3, 1985, providing details of the Hazardous Waste Contingency Plan and the Waste Disposal Monitoring Plan.

8. Letter dated March 14, 1985, to Mr. Thomas R. Gredell, P.E. from Mr. Robert M. Robinson, P.E. providing additional details of the landfill design and operation.

9. Report entitled Spring Grouting Summary, West Lake Landfill, Inc. Bridgeton, Missouri, received April 30, 1985; prepared by Drilling Service Company; dated February 15, 1985, through April 18, 1985.

10. Report entitled Spring Grouting Summary, Grout Curtain #2, West Lake Landfill, Inc. Bridgeton, Missouri, received October 3, 1985; prepared by Drilling Service Company; dated May 23, 1985, through August 2, 1985.

11. Letter dated July 5, 1985, to Mr. John D. Doyle, P.E. from Mr. Robert M. Robinson, P.E. providing additional information concerning the grouting reports.

12. Report entitled Hydrogeologic Investigation, West Lake Landfill, Preliminary Phase Report, January, 1985; prepared by Burns & McDonnell; received March 18, 1985.

13. Report entitled Interim Report on the Proposed Groundwater Sampling Program for the Primary Phase of the Hydrogeologic Investigation, West Lake Landfill, St. Louis County, Missouri, October 1985; received October 8, 1985.

Approval of the application and issuance of this permit is given with the explicit understanding that the sanitary landfill will be developed and operated in compliance with the approved plans, specifications and operating procedures, with the conditions of the permit, with the Missouri Solid Waste Rules and Regulations, and in accordance with the Missouri Solid Waste Management Law. This permit is not to be construed as compliance with any existing local ordinances or zoning requirements. This permit for operation of a solid waste disposal area is issued only to the person named in the application and shall not be transferable.

Conditions

The following conditions are an integral part of the permit. Compliance with these conditions shall, in part, determine compliance with the permit.

1. This permit, Solid Waste Disposal Area Operating Permit #118912, encompasses the proposed expansion area and additional solid waste fill by West Lake Landfill, Inc. over the disposal areas permitted under Solid Waste Disposal Area Operating Permit Numbers 118906 and 118909 issued to West Lake Landfill, Inc. This document supersedes and replaces the previous permits and permit documents.

2. West Lake Landfill, Inc. shall establish and maintain an escrow fund for the purpose of providing post-closure care and maintenance of the landfill. The amount and manner of maintaining this fund shall be as described in the approved permit documents.

A. Fifty percent of the first yearly cost of this fund shall be deposited in this fund prior to acceptance of solid waste.

B. The existence and maintenance of this fund shall be verified to the department by the permittee prior to acceptance of solid waste. The maintenance of this fund shall be verified to the department annually prior to the anniversary date of establishment of the fund, in writing, by the financial institution wherein this fund is deposited.

3. An environmental assessment of the entire landfill site shall be initiated by West Lake Landfill, Inc. or any successor or assign ("hereinafter West Lake") immediately after the issuance of this permit. This assessment, including hydrogeologic investigation, shall be completed by November, 1986, and shall be used as the basis for the development of a monitoring program and feasibility study to assess necessary remedial action. The conclusions of the feasibility study shall be submitted to the department within two years after the issuance of this permit. Implementation of necessary remedial action will be undertaken by West Lake in accordance with reasonable design and construction scheduling. Additional groundwater monitoring requirements will be required, based on review of the hydrogeologic investigation and feasibility study.

4. Initial training of the waste inspector (spotter) shall be provided so that he/she is able to adequately perform the duties as described in the permit documents. At a minimum, the initial training for this employee shall include:

A. Familiarization with 10 CSR 80-3.010(3), solid waste excluded.

B. Identification and recognition of unacceptable wastes, as described in 10 CSR 80-3.010(3).

C. Familiarization with the necessary procedures to obtain approval of special waste disposal requests.

D. Provision of a list of all special wastes approved for disposal by the department.

5. Intermediate cover is not required until the fill is above the quarry rim, as proposed in the approved permit documents.

6. Leachate and sludge from leachate treatment shall be collected, treated and disposed of as per the approved permit documents.

A. Leachate shall be treated and disposed of in accordance with all applicable water quality laws, rules, regulations, and policies as enforced by the Water Pollution Control Program, Missouri Department of Natural Resources.

B. West Lake Landfill, Inc. shall two times a year test the leachate and leachate treatment sludge for hazardous waste characteristics pursuant to 10 CSR 25-4.010 (2 through 5) and submit the results of such tests within sixty days to Missouri Department of Natural Resources. If hazardous wastes are detected in the leachate or sludge West Lake Landfill, Inc. shall implement proper handling of such hazardous wastes in accordance with the Missouri Hazardous Waste Management law, Rules and Regulations.

C. Sludge from the on-site leachate treatment system is acceptable for disposal at the landfill, unless tested to be a characteristic hazardous waste as per condition 6B.

D. Static leachate levels in the collection sumps in the unfilled area of the quarry, as shown in the approved permit documents, will be maintained at a level less than 30 feet above the base of the sump. The leachate level shall be checked monthly, recorded and made available upon department request.

E. Static leachate levels in the previously filled areas of the quarry, as shown on the approved permit documents, shall be maintained at a level less than 50 feet above the base of the sump. The leachate level shall be checked monthly, recorded and made available upon department request.

7. A. Groundwater monitoring shall be required as per the attached document entitled Monitoring Program for the West Lake Landfill, Inc. Sanitary Landfill. The wells shall be sampled within 30 days of issuance of the permit. The first sample will be used as a background sample and should be analyzed for the extended list of parameters, as if it were an annual analysis.

B. Three groundwater monitoring wells have been installed in the area of the grout curtain in the northeast corner of the large quarry. Two wells were installed during the placement of the initial grout curtain and were designated as groundwater monitoring wells (GWMW) #4/III and (GWMW) #14/III in the application for operating permit. The third well was installed during the placement of grout curtain #2 and was designated as groundwater monitoring well (GWMW) #17/IV in the application for operating permit. The water level in these wells shall be monitored monthly, recorded, and made available upon department request.

C. All three wells will be monitored, unless the department is requested to reevaluate the monitoring program. If requested and approved, one or more of the wells can be eliminated from the sampling program if hydraulic communication between the wells is verified.

D. Additional sampling points may be added to the monitoring program depending on the results of the hydrogeologic investigation (See Condition #4).

8. The following previously approved special wastes are approved for disposal under permit #118912:

A. Fly ash derived from a coal burning industrial boiler, generated by McDonnell Douglas Corporation; 400 tons per month; approved November 1, 1984.

B. Incinerator ash derived from municipal refuse incineration, generated by McDonnell Douglas Corporation; 800 cubic yards per month; approved November 1, 1984.

A special waste disposal request will have to be submitted to, and approved by, the Waste Management program prior to accepting any other special waste as per 10 CSR 80-3.010(3).

9. Each eight inch lift of the twelve foot wide pad in the northeast corner should be tested for soil density to confirm that a minimum compaction of 90% of the standard proctor density is obtained.

10. All surface water discharges shall be made in accordance with all applicable water quality laws, rules, regulations and policies as enforced by the Water Pollution Control Program, Missouri Department of Natural Resources.

11. Methane gas shall be vented or burned in accordance with all applicable air quality laws, rules, regulations, and policies as enforced by the appropriate air pollution control regulatory agency.

12. Department review and approval of any planned final use is required prior to implementing a designated, commercial, final use of the site.

13. Within six months of the date of issuance of the permit, two copies of a final, comprehensive engineering report shall be submitted to the Waste Management Program. This report shall incorporate all present design and operating information into one reference manual detailing the final approved plans and specifications for the design and operation of the proposed sanitary landfill. This report shall incorporate all information required by regulation, eliminate all contradictory information, and include all revisions and additions to the original application for operating permit, as approved.

Facility Description

The proposed sanitary landfill is located in U.S. Survey 131, Township 46 North, Range 5 East, St. Louis County, Missouri. The proposed site consists of a total of approximately 214 acres of which approximately

52 acres will be utilized for the sanitary landfill. The types of wastes to be accepted will consist of municipal solid waste, bulky waste, dead animals, demolition and construction waste, and brush and untreated wood waste. Approval to dispose of special wastes other than the wastes listed above (except hazardous wastes, explosives, or radioactive material) will be considered on a case-by-case basis, as provided in 10 CSR 80-3.010(3). The area method of sanitary landfill operation will be utilized. The fill heights and area locations are to be completed as shown on the approved engineering plans and specifications and maintenance of the area shall be provided in accordance with the post-closure maintenance plan. Upon completion of the landfill, it will be used for as yet undesignated commercial operations.

All fencing, gates, equipment, maintenance buildings, all-weather access roads, signs, surface-water control devices, operating equipment, standby equipment and other necessary appurtenances shall be provided as per the final approved plans, specifications and operating procedures. The plans, specifications and operating procedures described above have been examined as to sanitary features of design which might affect the operation of the solid waste disposal area as a sanitary landfill.

Modification and Termination of Permit

The department reserves the right to revoke or modify this permit after due notice:

1. If it is found that the holder of the permit is in violation of the Missouri Solid Waste Management Law, or the Missouri Solid Waste Management Rules and Regulations;

2. For failure to operate in accordance with the approved plans, specifications and operating procedures;

3. For creating a public nuisance, health hazard or causing environmental pollution;

4. For failure to comply with any and all conditions of the permit, as described herein;

5. If it is found that additional construction or alteration of the solid waste disposal area is necessary to comply with any and all rules and regulations promulgated in accordance with the Missouri Solid Waste Management Law;

6. If it is determined a facility has not been operated for a period of one year.

This permit shall become void after notice to the department by the person named in the permit that said person has discontinued operation of the disposal area.

Upon initiation of operation at your landfill, you will have indicated your acknowledgement and acceptance of this permit and conditions of the permit. If you have any questions, please contact the Waste Management Program at (314) 751-3241 or P. O. Box 176, Jefferson City, MO 65102.

Sincerely,

DEPARTMENT OF NATURAL RESOURCES

Frederick A. Brunner, Ph.D., P.E.
Director

FAB:mpl

cc: East-West Gateway Regional Planning Commission
Mr. Robert M. Robinson, P.E.

2

Recvd. 12-9-85

Burns & McDonnell
ENGINEERS - ARCHITECTS - CONSULTANTS

December 6, 1985

Mr. Vernon Farr
West Lake Landfill, Inc.
13570 St. Charles Rock Road
Bridgeton MO 63044

West Lake Landfill
Project No. 84-075-1-001

Dear Mr. Farr:

As we discussed by telephone, I suggest you contract with either Anco Testing Laboratory, Inc. or Pittsburg Testing Laboratory to conduct the necessary soil compaction testing for the 12-foot wide soil liner.

The selected laboratory should be provided the two Reports of Proctor Data dated June 3, 1985 by Kansas City Testing Laboratory (attached). These proctor data reports indicate that it should be possible to obtain 90 percent Proctor Density, 96 pounds per cubic foot with a moisture content as high as 23 percent. The higher the moisture content the more effort that will be necessary to obtain the required compaction. Therefore, you should select the driest soil available from the borrow area. One laboratory indicated the moisture content may be as high as 24 percent at the present time because of the wet weather.

The soil should be spread out in 8-inch lifts for compaction with the sheepsfoot roller. Experience and testing by the laboratory will determine the number of passes necessary with the roller. The laboratory should conduct two nuclear density and moisture content tests on each compacted 8-inch lift to confirm you have obtained the 90 percent Standard Proctor Density. The laboratory technician should keep records on the testing results and approximate locations. You should be provided a copy of the testing records for West Lake's permanent files.

We suggest that the laboratory collect one sample per day from the delivered borrow material on which they run a Proctor analysis obtaining the same data shown on the attached Kansas City Testing Laboratory reports. This will provide updated data on the borrow material and assist future compaction work.

LAI 0185

4800 EAST 63rd STREET, P.O. BOX 173, KANSAS CITY, MISSOURI 64141 • TEL: 816-333-4375 TWX: 910-771-3059

If we can be of further assistance, please advise.

Sincerely,

Robert M. Robinson, P.E.
Project Manager

RMR/gph

Attachment

cc: Mr. William Whitaker

2

PERMIT APPLICATION
AND ENGINEERING REPORT
FOR
WEST LAKE LANDFILL, INC.
SANITARY LANDFILL EXPANSION
BRIDGETON, MISSOURI

January 1986
84-075-1-001

BY
BURNS & McDONNELL
ENGINEERS-ARCHITECTS-CONSULTANTS
KANSAS CITY, MISSOURI

WSTTC.ME

LAI 0186

EMPLOYEE - OWNED
Burns & McDonnell
ENGINEERS - ARCHITECTS - CONSULTANTS

January 7, 1986

Mr. William E. Whitaker, President
West Lake Landfill, Inc.
13570 St. Charles Rock Road
Bridgeton MO 63044

Permit Application and Engineering Report
West Lake Landfill, Inc. Sanitary Landfill
Expansion
Project 84-075-1-001

Dear Mr. Whitaker:

In accordance with Condition No. 13 of the Missouri Department of Natural Resources' Solid Waste Disposal Area Operating Permit #118912, we have revised our report entitled Permit Application and Engineering Report for West Lake Landfill, Inc. Sanitary Landfill Expansion and related engineering drawings. The Operations Manual under separate cover has also been revised accordingly. These reports and drawings have also been revised to confirm the continued use of the current landfill entrance, because the City of Bridgeton did not approve of the entrance from Old St. Charles Rock Road.

Two copies of these final reports and drawings have been forwarded to the Waste Management Program.

Respectfully submitted,

BURNS & McDONNELL
ENGINEERING COMPANY

STATE OF MISSOURI
ROBERT M. ROBINSON
E-10948
REGISTERED PROFESSIONAL ENGINEER

Robert M. Robinson

Robert M. Robinson, P.E.
Project Manager

RMR/skb

Mailing Address:
P.O. Box 419173
Kansas City, Missouri 64141-6173

Telephone:
(816) 333-4375
Fax: (816) 333-3690 or (816) 822-3415

Courier Delivery Address:
4800 E. 63rd St.
Kansas City, Missouri 64130-4696

45

501 — 12.75

DEPARTMENT OF NATURAL RESOURCES

Division of Environmental Quality
P.O. Box 1368
Jefferson City, Missouri 65101

APPLICATION FOR OPERATING PERMIT

Solid waste disposal area or solid waste processing facility: (check only one)

- [X] Sanitary landfill
- [ ] Incinerator
- [ ] Compost plant
- [ ] Demolition landfill
- [ ] Transfer station
- [ ] Resource recovery plant
- [ ] Other (specify) _____

Name of Area or Facility: West Lake Landfill, Inc. Sanitary Landfill

Location: City: Bridgeton County: St. Louis

____ 1/4 ____ 1/4 ____ 1/4, Section U.S. Survey 131 Township 46N Range 5E

Brief description of area or facility for which application for permit is made: (such as size or capacity) The sanitary landfill expansion is located in approximately a 33-acre area of the existing limestone quarry. Also, the landfill will extend over part of the current sanitary landfill.

Check type of waste proposed to be accepted:

- [X] Municipal solid waste
- [X] Bulky waste
- [X] Dead animals
- [X] Incinerator residue
- [X] Demolition and construction waste
- [X] Brush and untreated wood waste
- [ ] Septic tank pumpings
- [ ] Wastewater treatment plant sludges
- [ ] Other sludges (specify) _____
- [ ] Liquids (specify) _____
- [ ] Industrial process waste (specify) _____
- [ ] Hazardous wastes (specify) _____
- [ ] Other waste (specify) _____

Registered engineer or consulting engineering firm submitting plans:

Name: Burns & McDonnell Phone: (816) 333-4375
Address: P.O. Box 173
City: Kansas City State: Missouri Zip Code: 64141

OPERATOR: (Person principally responsible for the operation.)
Name: West Lake Landfill, Inc. Phone: (314) 739-1122
Address: 13570 St. Charles Rock Road
City: Bridgeton State: Missouri Zip Code: 63044

OWNER: (Legal owner of land or facility if different than operator.)
Name: (Same as Operator) Phone: _____
Address: _____
City: _____ State: _____ Zip Code: _____

If granted this permit, we the undersigned, agree to abide by the rules, regulations, orders and decisions of the Missouri Department of Natural Resources. We understand that in the event of any false or fraudulent information in the application, plans and data, or of failure to operate the area or facility in a proper and legal manner, the permit may be revoked after due notice from the Missouri Department of Natural Resources. We understand the permit is not transferable.

[signature] (Pres.) — September 25, 1984
SIGNATURE OF OPERATOR — DATE

[signature] (Pres.) — September 25, 1984
SIGNATURE OF OWNER — DATE

LAI 0187

TABLE OF CONTENTS

	Page No.
LETTER OF TRANSMITTAL	
APPLICATION FOR OPERATING PERMIT	
TABLE OF CONTENTS	TC-1
LIST OF FIGURES	LF-1
INTRODUCTION	IN-1
PART I - EXISTING CONDITIONS	
A. CURRENT LANDFILL OPERATION	I-1
B. SOLID WASTE QUANTITIES AND TYPES	I-1
C. EXISTING LEACHATE PRETREATMENT SYSTEM	I-3
D. EXISTING GAS CONTROL SYSTEM	I-5
PART II - PROPOSED SANITARY LANDFILL EXPANSION DESIGN	
A. LOCATION AND DESCRIPTION	II-1
B. GEOLOGIC SETTING	II-2
C. PROPOSED LANDFILLING METHOD	II-4
D. SURFACE WATER DRAINAGE	II-6
E. LEACHATE MANAGEMENT	II-8
F. GAS CONTROL AND COLLECTION	II-19
PART III - SANITARY LANDFILL OPERATIONS	
A. OPERATING HOURS AND ACCESS CONTROL	III-1
B. LANDFILL EQUIPMENT	III-1
C. COVER MATERIAL	III-2
D. DAILY, INTERMEDIATE, AND FINAL COVER OPERATIONS	III-3
E. LITTER CONTROL	III-5
F. VECTOR CONTROL	III-5
G. DUST CONTROL	III-5
H. SAFETY PROGRAM	III-6
I. MONITORING	III-7
J. RECORD KEEPING	III-8
K. CLOSURE	III-9
PART IV - POST-CLOSURE PLAN	
A. PERIOD	IV-1
B. PROGRAM	IV-1
C. COSTS	IV-4
D. ESCROW REQUIREMENTS	IV-5
APPENDIX A - SOIL ANALYSES	
APPENDIX B - PERIMETER LEACHATE DRAINAGE ANALYSIS	
APPENDIX C - LETTER FROM ST. LOUIS MSD	
APPENDIX D - LETTER FROM EQUIPMENT COMPANY	
APPENDIX E - HAZARDOUS WASTE CONTINGENCY PLAN (LEACHATE AND SLUDGE)	

LIST OF FIGURES

		Page No.
I-1	FLOW SCHEMATIC - EXISTING LEACHATE PRETREATMENT SYSTEM	I-4
II-1	FLOW SCHEMATIC - PROPOSED LEACHATE PRETREATMENT SYSTEM	II-15

INTRODUCTION

The purpose of this report is to provide that information necessary to obtain an operating permit for the proposed 33-acre expansion of the West Lake Landfill, Inc. Sanitary Landfill.

This report addresses the current landfill operation and the proposed design and operation of the landfill expansion.

* * * * *

PART I

EXISTING CONDITIONS

A. CURRENT LANDFILL OPERATION

West Lake Landfill, Inc. is currently operating a sanitary landfill in a 7-acre section of the company's limestone quarry located in U.S. Survey 131, Township 47 North, Range 5 East in St. Louis County, Missouri. Currently, the site entrance road is off St. Charles Rock Road, approximately 1 mile northwest of the intersection of St. Charles Rock Road and I-270. With the current quantity of waste being received, it is estimated the presently permitted area would be filled in mid 1985.

The sanitary landfill serves the twofold purpose of disposing of solid waste and reclaiming an existing limestone quarry. The operation of the landfill and the quarry have proven compatible through the use of available equipment, use of soil excavated from a proposed new quarry south of Old St. Charles Rock Road, and the availability of rock and equipment to maintain the landfill access roads during inclement weather.

B. SOLID WASTE QUANTITIES AND TYPES

The quantity of solid waste received at the sanitary landfill is estimated at 3,300 tons per week based on the operators' records of the volume (cubic yards) of waste and an assumed incoming density of 500 pounds per cubic yard. The landfill operates 5-1/2 days per week.

The type of waste accepted includes: municipal solid waste, bulky waste, small dead animals, and incinerator residue. Demolition and construction waste, brush, and wood waste are disposed of at West Lake's Demolition Landfill or their air curtain destructor located on property nearby. The following waste materials are not accepted for disposal at the landfill: hazardous wastes, bulk liquids, semisolids, sludges containing free moisture, highly flammable or volatile substances, full or partially full pesticide containers, pesticides, septic tank pumpings, raw sewage sludge and industrial process sludges.

The following special wastes have been approved by the Missouri Department of Natural Resources (MDNR) Waste Management Program for acceptance at the West Lake Sanitary Landfill:

Fly ash derived from coal burning industrial boiler, generated by McDonnell Douglas Corporation (400 tons per month, approved November 1, 1984).

Incinerator ash derived from municipal refuse incineration generated by McDonnell Douglas Corporation (800 cubic yards per month, approved November 1, 1984).

A special waste disposal request will be submitted to MDNR for approval prior to accepting other special waste.

C. EXISTING LEACHATE PRETREATMENT SYSTEM

The existing leachate pretreatment system (see Figure I-1 and Drawing No. 1) includes a 7.5-acre holding lagoon (30-million-gallon capacity), 5,000 gallon holding tank, lime precipitation unit (solids contact basin), aerated lagoon and two final settling lagoons. As shown in Figure I-1, leachate from all of the existing collection wells except the South Landfill well is pumped to the holding tank and then to the lime precipitation unit. Leachate from the South Landfill collection well and the existing collection ponds is pumped to the holding lagoon and then directly to the aerated lagoon. The pump at the holding lagoon has a capacity of approximately 40 gpm. The lime precipitation unit is rated at 50 gpm and currently operates approximately 50 percent of the time at 40 gpm.

Effluent from the pretreatment system (approximately 40 to 80 gpm) is discharged to the Metropolitan St. Louis Sewer District (MSD) sewer system. The effluent quality is regulated by Ordinance No. 4786 of MSD.

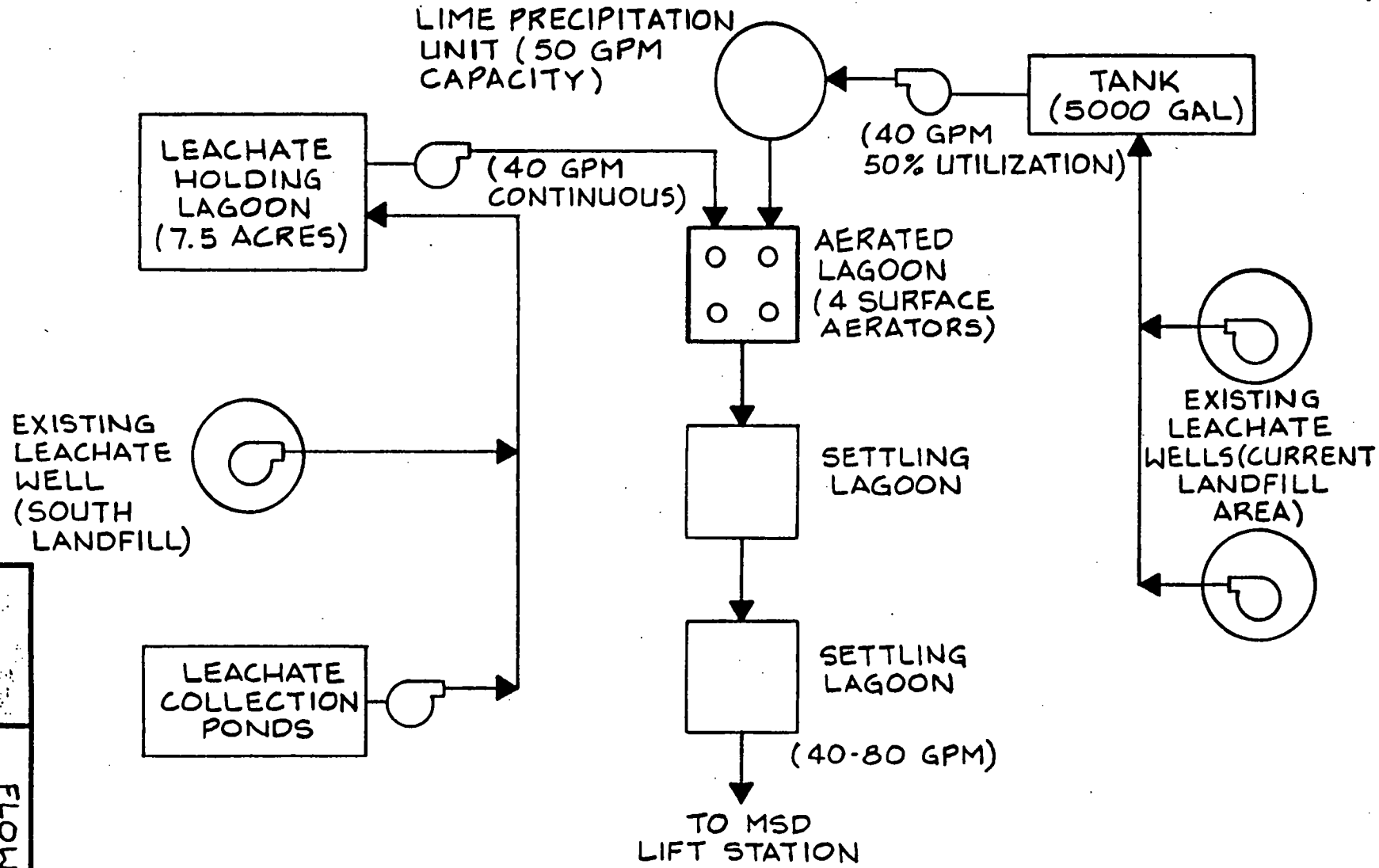

FLOW SCHEMATIC
EXISTING LEACHATE PRETREATMENT SYSTEM

FIGURE I-1

Instantaneous and 24-hour maximum allowable concentrations permitted by MSD are shown below compared with results of a grab sample of the treated leachate discharged to MSD in June, 1984.

	24-Hour Average (milligram/liter)	Instantaneous Maximum Allowable (milligram/liter)	West Lake Discharge to MSD (milligram/liter)
Antimony	0.5	1.5	<0.4
Arsenic	0.5	1.5	0.012
Barium	10.0	30.0	<0.4
Beryllium	10.0	30.0	<0.03
Cadmium	0.1	0.3	<0.03
Chromium (total)	5.0	15.0	<0.1
Copper	1.5	4.5	<0.1
Iron	15.0	45.0	0.2
Lead	0.2	0.6	<0.1
Mercury	0.03	0.09	0.0035
Nickel	2.0	6.0	<0.15
Selenium	0.2	0.6	0.009
Silver	0.5	1.5	<0.006
Zinc	3.0	9.0	<0.02
BOD	NL	300.0	30.0
COD	NL	NL	74.0
pH (units)	NL	5.5-10.5	10.1

Notes: Concentrations listed above are total substance (dissolved plus suspended).

NL = Not limited; NT = Not tested.

The above data indicates that the existing system is producing a discharge well within the quality standards established by MSD.

D. EXISTING GAS CONTROL SYSTEM

Currently gas collection and burning is done at a facility located on the east side of the existing landfill (see Drawing No. 1). This facility consists of two vacuum blowers and a gas burner. Gas is withdrawn from six existing gas collection wells located along the landfill perimeter in the

area of the facility and an underground storm sewer which flows northeast along the property line from the gas collection and burner facility (see Drawing No. 3).

* * * * *

PART II

PROPOSED SANITARY LANDFILL EXPANSION DESIGN

A. LOCATION AND DESCRIPTION

The proposed sanitary landfill expansion site is located in U.S. Survey 131, Township 46N, Range 5E. The 33-acre landfill expansion site (shown on Drawing No. 1) is just south of the existing landfill and has a volume of approximately 13,000,000 cubic yards. This will provide an approximate landfill life of 30 years, assuming the landfill continues to receive the quantities of solid waste described in PART I. The depth of landfill will range from 210 to 275 feet with the major portion about 250 feet.

Access for the landfill expansion will be via St. Charles Rock Road, using the existing site entrance road, and an existing quarry service road which goes down into the expansion area along the northwest and southwest quarry walls. The initial temporary extension of this road on the quarry floor is shown on Drawing No. 2. Current quarry operations in the expansion area are limited to the northwest wall and a final layer of rock being removed from the quarry floor. The depth of this layer of rock varies from 6 to 20 feet. Proposed initial landfill contours, including the effects of the ongoing quarry operations, are shown on Drawing No. 2. Quarry operations in the area of the landfill expansion are expected to be completed in 1985.

The landfill expansion site lies entirely within the City of Bridgeton. City zoning for the site and surrounding land within 1/4-mile of the site is

shown on Drawing No. 1. The expansion site itself is zoned Manufacturing District, Limited (M-1). This is the same zoning classification that the currently operating landfill site has. Due to the land use prior to adoption of the City Zoning Ordinance, no zoning change or special use permit is required for the landfill.

The site is surrounded on the west and south by the quarry operations of the landfill operator, on the east by a farming operation, and on the north by industrial facilities. The farmhouse east of the site and a house near the northeast corner of the current landfill are the only residences within 1/4-mile of the site, and there are no known water supply wells within the 1/4-mile surrounding boundary. To the north, three industries and two commercial establishments are located within the 1/4-mile boundary. There are no utility easements or lines located on the actual disposal site. The final use of the site will be for as yet undesignated commercial operations.

B. GEOLOGIC SETTING

The limestone and dolomite quarry has vertical walls rising roughly 200 to 230 feet above the quarry floor. The bedrock formations being quarried are the St. Louis limestone and the Salem limestone and dolomite, both of the Mississippian System. The quarry floor is in the shaley upper portion of the Warsaw Formation. This shale has a very low permeability.

The Geologic Map of Missouri indicates that the Cherokee Group (Pennsylvanian) and the underlying Ste. Genevieve Formation (Mississippian)

are present above the St. Louis Formation in this area. These two bedrock units are very thin or absent at the quarry site.

The limestone units are generally massive and unfractured. A narrow system of vertical fractures occurring in the northeastern corner of the quarry has been pressure grouted to eliminate moderate flows (estimated maximum rate = 100 gpm) which have previously seeped into the quarry.

To the west of the quarried area the bedrock surface drops off drastically toward the Missouri River. Groundwater within the river alluvium occurs at an elevation of over 150 feet above the quarry floor. Because very little water enters the quarry from the west face, the limestone is considered to be nearly impermeable. Furthermore the landfill design provides for pumping the leachate so the depth will never exceed more than 20 feet. Therefore, the potential for groundwater or drinking water contamination is considered nil, and no groundwater monitoring wells are proposed in the expansion area site. (It should be noted that a condition of Operating Permit 118912 issued by the Missouri Department of Natural Resources (MDNR) on November 18, 1985 has required that three wells in the northeast corner of the expansion portion of the landfill be monitored for groundwater quality.)

The bluffs south of the quarry are proposed as the source of cover material. These are mantled with several tens of feet of loess. Loess typically consists primarily of silt with some clay and fine sand. The plasticity of loess typically ranges from low to high.

C. PROPOSED LANDFILLING METHOD

The existing and proposed final contours of the sanitary landfill are shown on Drawing Nos. 2 and 3. The landfill will use the area method with 8- to 10-foot-high lifts. The landfill has been divided into Areas 1 and 2 as shown on Drawing No. 2 for the purpose of explaining the sequence of fill. Before landfilling starts in Area 1, a soil embankment will be constructed between Areas 1 and 2. This soil embankment will provide initial hydraulic isolation of the two areas.

Landfilling will begin in Area 1 with a row of cells constructed along the northeast wall of Area 1. The rows of cells will progress to the southwest end of Area 1. The landfill lifts will have a top surface that drains slightly to the southwest. The fill side slope between Areas 1 and 2 will be a maximum of 3 to 1.

Phase I of Area 1 will be completed when the landfill lifts reach the approximately elevation 300.0. One foot of soil will be applied to the landfill surface and again graded to drain slightly toward the southwest.

Fill progression in Area 2 will be similar to Area 1. The initial row of cells will be placed on the quarry floor against the Area 1 fill, and the rows of cells will progress to the southwest quarry wall. The fill surface will be left with essentially no slope and will be undulating to promote

percolation of the rainwater throughout the fill. The first phase of the Area 2 fill will be complete when the fill elevation reaches approximately 300.0.

After completion of the initial phases of fill in both Area 1 and Area 2, the area will be filled by completing lifts over the entire area from the northeast to the southwest. The fill surface will be undulating with no overall slope, except to maintain a well-drained roadway. After the completion of each new lift, a new rock road providing all-weather access will be constructed across the top of the landfill. Temporary rock roads will be installed from the major interior road to the active working face of the landfill as required.

As the fill elevation increases, the proposed landfill will extend over portions of the current landfill until the final elevation in Drawing No. 3 are attained. Where waste is placed over a completed portion of the current landfill, the in-place cover material will be removed prior to placement of the waste. The excavated cover material will be stockpiled for later use. The primary crusher unit presently located within the quarry at approximately elevation 410 will be relocated prior to landfilling above elevation 400.0. The expansion of the landfill will enhance the quarry reclamation and improve the final surface drainage.

D. SURFACE WATER DRAINAGE

The topography of the expansion site perimeter currently allows off-site water to drain onto the site in two locations. The first is directly to the north where runoff water from the current landfill operation flows down into the quarry bottom. A second location is at the northwest corner of the expansion site adjacent to the present crusher operation. Otherwise, surface drainage is directed away from the quarry operation.

Initially, Surface Drainage Sump No. 1 will be constructed just northwest of the crusher operation as shown on Drawing No. 2. A shallow drainage ditch along the west side of the crusher operation (see Drawing No. 2) will divert surface water into the sump. The sump will be concrete lined and approximately 10 feet deep and the water will be pumped to the existing pond just west of the crusher operation or into the concrete plant process water tank.

Surface water from the current landfill site will continue to drain into the expansion site. Most of this water currently is collected in the existing leachate collection ponds. As these ponds are removed and filled with waste, this water will percolate through the waste and be removed as leachate. Most of the current landfill surface area ultimately will slope to drain toward the west as shown on Drawing No. 3.

Surface drainage within the quarry area will proceed in phases along with the landfilling operation. Initial construction on the quarry floor will include two surface drains in Expansion Area 2. These will be constructed

by blasting the quarry floor and leaving the limestone rock in place. The drains will transport surface water in Area 2 to a 40-foot by 80-foot sump constructed in a similar manner. However, sufficient rock from the sump will be removed to allow construction of the base of a 48-inch RCP riser pipe. This pipe will be used to initially withdraw surface water from the sump, and as the initial lift is placed in Area 2 the sump will be used to pump leachate.

During the initial Phase I operation of the landfill in Area 1, surface drainage from Area 1 will be pumped out of the quarry through an existing pipe in the northeast corner of the quarry. Water will be pumped from Area 2 to the existing drainage channel along the southwest boundary of the landfill. An NPDES permit application for this discharge has been submitted to the Missouri Department of Natural Resources. As the fill operation moves into Area 2, surface drainage will continue to be pumped out of the Area 2 sump until solid waste is filled to within 100 feet of the sump or analyses of the removed water indicate that leachate is draining into the sump. At this time, pumping of surface water drainage from the quarry will cease and water entering the quarry will be removed as leachate.

The final landfill contours will allow surface drainage to flow off the fill surface into the perimeter drainage system (see Drawing No. 3). Perimeter drainage along the expansion landfill property line will include a drainage channel along the southeast property boundary and an earth diversion berm directing surface drainage from the northeast landfill surface to the new drainage channel. The existing landfill area which will be raised by the

proposed landfilling operation will be drained by the existing surface drainage inlet and pipe on the east side and by a new drainageway to be constructed at the northwest boundary of the existing fill area. This drainage will flow by gravity through a let-down pipe consisting of a 15-inch CSP or corrugated polyethylene pipe to an existing stormwater manhole. A small portion of the surface drainage along the southeastern boundary of the existing landfill and the northeastern boundary of the expansion site will flow to an existing off site drainageway.

The western side of the landfill site is owned by the landfill operator, and detailed development of the surface drainage in this area will depend on the land use at the time of closure. As long as the existing crushing plant remains in operation, the crusher area will drain to Surface Drainage Sump No. 1 and be pumped as discussed earlier. Should the expansion portion of the landfill obtain elevation 450 before the crushing plant is taken out of operation, then Surface Drainage Sump No. 2 (see Drawing No. 3) would be constructed. Should the crushing plant be taken out of operation the area would be filled with soil and graded to drain.

E. LEACHATE MANAGEMENT

1. ADDITIONAL LEACHATE QUANTITY

During most of the expansion area's active life, all of the water entering the quarry will be allowed to percolate into the fill creating leachate. After construction of the initial surface drainage facilities, the only water entering the expansion area should be

precipitation and the surface drainage from the current landfill. The latter flow will not be considered additional leachate since most of it is currently being caught in the existing leachate ponds.

The maximum additional annual leachate generation was calculated by subtracting the estimated evaporation losses and leachate quantity absorbed by the solid waste from the total annual precipitation volume over the site. The increase in net annual leachate generation volume was estimated at 9,400,000 gallons per year based on the following assumptions:

a. Mean annual precipitation is 37 inches/year.

b. Precipitation in the expansion site is the only source of water contributing to additional leachate production.

c. Landfill surface area is 33 acres.

d. Significant quarry wall seepage into the expansion portion of the landfill will have been eliminated by grouting.

e. Thirty-five percent of annual precipitation will evaporate from the bare soil landfill surface. (Use of Water Balance Method for Predicting Leachate Generation from Solid Waste Disposal Sites, EPA 530/SW-168, 1975, p. 24).

f. Additional field storage of water by solid waste (including soil cover) is 15 percent by volume. (EPA 530/SW-168, 1975, pp. 17-19).

g. The annual landfill volume increase (including cover soil) will be approximately 400,000 cubic yards.

h. After final elevations and final cover is applied, it will be possible to obtain surface runoff and reduce the leachate generation to 15 to 25 percent of the annual precipitation.

Although the above calculation is only an average, it does provide an adequate criterion upon which to base leachate management requirements because the leachate holding pond can store leachate if and when the annual generation exceeds the average.

2. COLLECTION

Proposed leachate collection system modifications include construction of a new leachate collection well in the area of the current landfill and several new leachate collection facilities in the proposed landfill. The new collection well proposed for the current landfill is located on Drawing No. 2.

The layout of the leachate collection system in the proposed landfill area is shown in Drawing No. 2 and system details are included on Drawing No. 4. Leachate Collection Sumps 1 and 3 will be located in

Area 1. Leachate Collection Sump 1 will be constructed by blasting the sump into the bottom of the quarry. After sufficient rock is removed to place the riser pipe base, the rock will be replaced around the riser pipe. Leachate Collection Sumps 2 and 3 will be constructed in a similar manner.

Leachate drains on the quarry floor will be blasted on the perimeter of Area 1 as required to assure that drainage to the two leachate collection sumps is provided to all portions of Area 1. The leachate drains will be constructed by blasting the quarry floor and leaving the broken rock in place. The drains will have a minimum width of 6 feet. The perimeter drains will have depths as shown on Drawing No. 2, and the interior drains will be constructed to the depths required to assure drainage. The perimeter leachate drains will provide positive drainage ways for removal of leachate flowing down vertically along the quarry walls. These perimeter leachate drains will prevent leachate mounding near the quarry walls.

In addition to the grout sealing of the jointed bedrock system in the northeast corner of Area 1 and the leachate drainage and collection system described above, several additional measures are proposed to ensure minimal inflow of groundwater into the proposed landfill Area 1 as well as to prevent leachate seepage out of the area into the groundwater. Three groundwater monitoring wells north of the grout seal as shown on Drawing No. 3 will be used to monitor the groundwater level.

The water level readings will be compared with those from Leachate Collection Sump 3 monthly to confirm that the leachate level is lower than the groundwater.

A 12-foot thick layer of compacted soil will be placed against the northeast wall. This layer will promote downward movement of leachate to Leachate Collection Sump 3 and provides a compacted soil liner to separate the solid waste and the fractured limestone quarry wall that has been grouted to control the seepage into the quarry. The limits of the compacted soil layer are shown on Drawing No. 2. The layer will be constructed in lifts just ahead of the solid waste lifts placed against it. Two representative samples were collected in regard to the suitability of local soils that are to be utilized to construct the soil layer. The attached laboratory test results (see Appendix A), indicate that more than 95 percent of the materials pass a No. 200 sieve size. Therefore, the material is composed primarily of silt and clay size particles which exhibit liquid limits in the range of 32 to 34 percent with a corresponding plastic index of approximately nine. According to the Unified Soil Classification System this material is classified as an inorganic, lean silty clay of low to medium plasticity. Standard Proctor tests indicate maximum unit dry densities in the range of 106 to 107 lb/cu ft with corresponding optimum moisture contents of 17 to 18 percent. Based upon these test results and our past experience with the utilization of loess soils, this material should provide an excellent soil layer for the intended design purposes when compacted in 8-inch

lifts with 3 to 5 passes of a sheepsfoot roller. Nuclear density testing procedures will be used to confirm that 90% of standard Proctor density is being obtained.

Leachate collection in Area 2 will be accomplished using the drainage system initially constructed for surface water and the perimeter leachate drains shown on Drawing No. 2.

Three additional leachate containment measures which are incorporated in the design are chimney drains, a 4-foot soil layer placed against the quarry walls above elevation 430, and waste lifts sloping away from the quarry wall. The chimney drains will be constructed on 200-foot centers along the steep quarry wall to assure the downward movement of leachate and prevent mounding of leachate near the quarry wall. The chimney drain locations are shown on Drawing No. 2 and typical details are shown on Drawing No. 4. The drains will be constructed of 4-inch or larger waste rock with less than 10 percent fines (less than sand size particles) and will be loosely dumped against the quarry wall as the landfill lifts are advanced vertically. Chimney drains will have an effective horizontal area of approximately 16 square feet. Within 25 feet of the quarry walls, soil cover on each landfill lift will be removed prior to placing additional waste. This will promote leachate drainage at the landfill perimeter to the chimney drains (see Appendix B). Ten feet of final cover will be placed over the drains when the final cover is installed.

The 4-foot wide soil layer (See Drawing No. 4) will also be placed against the quarry wall to promote downward movement of leachate rather than lateral movement. The 430 elevation was established to ensure that the soil layer will extend below the weathered rock. This soil layer will be less permeable than the waste material in the landfill lift. This layer also will advance vertically with the landfill lifts. The soil will be dumped against the quarry wall and shaped without making a special compaction effort. At the quarry walls each lift will slope at 3-5 percent towards the center of the landfill for a minimum of 100 feet into the landfill. This construction will drain leachate away from the landfill boundary.

3. TREATMENT AND DISPOSAL

Leachate will be pumped from the three leachate sumps to the existing leachate treatment facilities. The leachate pumps will be submersible pumps capable of pumping flows of 100 gpm at total dynamic heads in excess of 300 feet.

The proposed leachate pretreatment system (see Figure II-1) includes pumping leachate from both the Area 1 and 2 sumps to the existing leachate holding lagoon. This lagoon has sufficient capacity for holding surge volumes of leachate produced during wet weather. The water then would be pumped to the aerated lagoons and through the rest of the system in the same manner as is currently practiced. As indicated by the testing results reported in PART I, the organic loading of the West Lake discharge to MSD (sampled at 30 mg/l vs. 300 mg/l

allowable) indicates that considerable additional organic treatment capacity is available. However, if actual operating data shows that additional aeration capacity is required, a curtain wall could be constructed and additional surface aerators installed in the 7.5-acre holding lagoon.

The additional leachate would not be treated in the lime precipitation unit. This operational strategy is based on the fact that the current leachate holding lagoon effluent appears to meet the MSD effluent quality standard without requiring lime precipitation. Metals concentrations of a June 1984 grab sample of the leachate holding lagoon effluent and the most restrictive MSD standard (24-hour average) are shown below:

	MSD Allowable 24-Hour Average (mg/l)	7.5-Acre Holding Pond Effluent (mg/l)
Antimony	0.5	N.T.
Arsenic	0.5	0.007
Barium	10.0	<0.4
Beryllium	10.0	N.T.
Cadmium	0.1	<0.03
Chromium (total)	5.0	<0.1
Copper	1.5	<0.1
Iron	15.0	<0.1
Lead	0.2	<0.1
Mercury	0.03	<0.0016
Nickel	2.0	<0.15
Selenium	0.2	<0.003
Silver	0.5	0.1
Zinc	3.0	N.T.

N.T. = Not Tested

If actual operating data shows that additional metals removal is required, one of the expansion area sumps or the existing South Landfill

leachate collection well would be pumped to the lime precipitation unit. In fact, based on the current operating schedule of the lime precipitation unit, the additional annual capacity of the unit, assuming 90 percent availability, is in excess of 10,500,000 gallons per year. This capacity exceeds the expected annual increase in leachate production, indicating that the entire additional leachate production could be treated by the unit if required.

During the life of the site, the 5,000 gallon holding tank will require relocation due to the placement of additional solid waste fill in the area of its present location. The tank will be relocated either to a higher elevation near its present location or near the lime precipitation unit. The relocation details (timing and place) also will depend on the actual pretreatment operating experience, i.e. if and when additional leachate treatment in the lime precipitation unit is required. Leachate collection wells in the area of the current landfill also will be raised as waste is placed to higher elevations in this area. The leachate from this new leachate collection well will be pumped to the 5,000-gallon holding tank. A 50 gpm submersible pump with a total dynamic head in excess of 220 feet will be placed in this collection well.

4. CONTINGENCY PLAN

Comparison of Figures I-1 and II-1 show that the additional leachate treatment and discharge rate produced by the proposed landfill is expected to be approximately 20 gallons per minute, assuming no

contribution of leachate by the grouted seep at the northeast corner of the proposed landfill. If the grouting and other groundwater intrusion prevention measures totally fail, this additional flow could approach 120 gallons per minute (100 gpm from the seep and 20 gpm from rainfall on the landfill). The contingency plan for this eventuality is discussed below.

First an effort would be made to regrout the groundwater seep to stop the flow into the landfill. Should the regrouting fail, a water well would be installed near the existing groundwater monitoring wells. This well would be pumped and discharged to the surface drainageway. Controls including water levels and water quality would be implemented to assure the water was not contaminated before discharge. (The MDNR Water Pollution Control Program will be consulted to determine whether an NPDES permit is required for the discharge of the groundwater.) The groundwater levels in the area of the seep would be reduced, thereby reducing seepage into the landfill. Leachate Collection Sump No. 3 has the capacity to handle the seepage should it occur.

Under this scenario, it is expected that the leachate would be of low strength and the lime precipitation unit would not be required to treat additional flows. Therefore, the only required modifications to the leachate treatment system would be possible up-sizing of some of the pumps.

With respect to disposal, the Metropolitan St. Louis Sewer District has confirmed that existing sewers have the capacity to carry an additional 150 gallons per minute (see Appendix C). In addition, during the 6-hour off-peak period 300 gallons per minute could be accepted. These capacities convert to a continuous additional leachate handling capability of approximately 190 gallons per minute. Thus, sufficient sewer capacity is available currently to handle the additional leachate production even assuming total failure of the grouting and other groundwater intrusion prevention measures to be performed at the northeast corner of the proposed landfill.

F. GAS CONTROL AND COLLECTION

A gas collection system has been designed for installation in the landfill expansion area to control potential migration of methane gas and odors. The layout of the gas collection system is shown on Drawing 3, and typical details are shown on Drawing No. 5. The laterals are spaced at approximately 40 feet vertically and 350 feet horizontally. The outer laterals will be placed within 100 feet from the quarry wall, and the highest laterals will be covered by a minimum of 40 feet of fill when final contours are achieved.

The advantage of the proposed lateral system is that it will be installed as the quarry is being filled. This allows venting the gas and flaring (burning) it from the partially completed landfill, an important factor considering the site's estimated life of 30 years. Flaring of the gas during the fill operation would be accomplished by mounting the flare cover

and covering the exposed portion of the riser pipe with soil. Based on current solid waste quantities, the cover soil would have to be removed and additional riser pipe added less than once per year.

The system is designed for natural venting, however, if this does not adequately control gas migration and odors, a vacuum blower will be installed to accelerate the removal of gas. The landfill gas will be burned as soon as a combustible quality of gas is produced in the collection system which is estimated to be within six months of constructing a landfill lift over the gas collecting laterals.

A gas monitoring system consisting of nine methane gas monitoring wells will be installed along the landfill boundary (see Drawing No. 3) to detect any movement of gas off the landfill property. Gas Wells G-2, G-8 and G-9 will be installed within six months of permit issuance. The other wells will be installed before the landfill reaches elevation 400 in the immediate area of the gas monitoring well.

The only modification to the existing gas control system will be to extend the riser pipes of the existing collection wells as additional solid waste is placed over the existing landfill.

* * * * *

PART III - SANITARY LANDFILL OPERATIONS

A. OPERATING HOURS AND ACCESS CONTROL

The landfill will be open to receive waste six days per week from 7 a.m. to 3:50 p.m. on Monday through Friday and 7 a.m. to 11 a.m. on Saturday. Access to the operation will be controlled by the entrance gates.

The sanitary landfill shall have posted signs which clearly indicate the purpose of the operation and prohibit trespassing for any purpose unrelated to the operation. Also the owner and operator of the site, hours of operation, types of waste accepted and/or excluded, and fees charged and emergency telephone numbers, shall be posted.

B. LANDFILL EQUIPMENT

The quantity of waste presently received at the operation is not expected to increase in the near future. Therefore the equipment which is currently in use will be adequate for the proposed expansion. If waste volumes increase, additional equipment will be provided as needed. The normal operation of this landfill requires one Caterpillar D-8 tractor full time and two 35-ton trucks and one 6-yard front end loader part time. The equipment currently available at the landfill includes the following:

1. HAUL UNITS (COVER MATERIAL)

1 - Caterpilar 35 ton truck
3 - Caterpillar 50 ton trucks
4 - Euclids 35 ton trucks

2. FRONT END LOADERS

1 - Michigan 11 yards
2 - Caterpillar 6 yards
1 - Caterpillar 7 yards
1 - Int. 125E 1.25 yards

3. BULLDOZERS

2 - Caterpillar D-8 Tractors
1 - Caterpillar D-9 Tractor

4. HAUL ROAD

1 - Caterpillar Road Grader
1 - Water truck

5. MISCELLANEOUS

Draglines - 1 Lima Model 1250, 1 North West #6
Pumps - (8 Size 8"-4")

Area equipment dealers have replacement equipment available for use on short notice (see letter in Appendix D).

C. COVER MATERIAL

The soil to be used for landfill cover material is located directly to the south of the present quarry operation, across Old St. Charles Rock Road. Future quarry operations will possibly be extended to this area (see Drawing No. 1). In any case, the soil overburden can be removed for landfill operations.

The soil to be used is a silty-clay loam. The USCS classification would either be ML or CL. This type of soil, applied to the working surface of

the landfill, will be effective in minimizing fire hazards, odors and blowing litter, and in providing a pleasing appearance.

Based on a total landfill volume of 13,000,000 cubic yards, approximately 2,600,000 cubic yards of soil will be required to provide cover at an overall 1 to 4 soil-to-refuse ratio. In order to provide this amount of soil, the cover material area (see Drawing No. 1) was divided roughly into quadrants with planned soil excavations as follows:

Quadrant	Approx Area (Ac)	Average Excavation Depth (ft)	Average Final Elev. (ft)	Soil Volume (yd^3)
NE	28.6	20	500	923,000
SE	18.0	27	550	784,000
SW	17.1	16	454	441,000
NW	10.5	30	454	508,000
Totals	74.2	--	---	2,656,000

If additional cover material is found to be necessary, considerable additional cover material can be excavated on the east side of the cover material area since the rock elevation throughout the area is expected to be approximately 454.

D. DAILY, INTERMEDIATE AND FINAL COVER OPERATIONS

Daily cover will be applied regardless of weather. The minimum thickness of the compacted daily cover will be 6 inches. Intermediate soil cover will not be used after completion of Phase 1 of Area I because it may retard the moment of precipitation down into the solid waste. The lateral gas control system will be used to control odors. Therefore, the use of intermediate

cover is unnecessary and actually interferes with the landfilling system proposed for this facility. Intermediate cover and surface grading will be used once the landfill reaches an elevation that surface water can be drained to the natural ground surface. This intermediate cover will be removed prior to constructing a landfill cell over a lift that has received intermediate cover.

When the fill reaches the final elevation, final soil cover will be applied as the final lift is established. This final cover will consist of 3 feet of silty-clay loam soil.

Because of the landfill depth (250 ft), there will be a considerable amount of settling, although much of this settlement will take place prior to landfill completion. The final proposed contours have surface grades of 5 percent and side slopes of 25 to 33 percent. This will minimize necessary regrading from future landfill settlement.

The final cover will be graded, limed, and fertilized as needed and then seeded with native grasses to control erosion. The surface grades and vegetation will be maintained as needed to prevent ponding and enhance runoff and evapotranspiration.

E. LITTER CONTROL

Because of the nature of a quarry operation, blowing litter should not be a factor for most of the life of the landfill. All but the last few lifts of the landfill operation will be conducted in a recessed setting which will be a protected area against windy conditions. During operation of the last few lifts of the landfill, it will be necessary to utilize temporary or portable litter fences to aid in litter control. All litter will be collected and incorporated into the working face at the end of each working day.

F. VECTOR CONTROL

Utilization of proper operating procedures should prevent any problems with vectors. However, if a vector problem should arise, an assessment will be made of the operating conditions to see what conditions are being maintained that are favorable for the existence of the vectors and necessary corrective action taken. A professional exterminator will be retained to assist in the actual eradication process.

G. DUST CONTROL

Dust control at the sanitary landfill is minor compared to dust control of the overall quarry operation. A dust control program is already in effect for the quarry operation and dust control for the sanitary landfill will be part of this program. The major dust concern at the sanitary landfill is from the access roads, most of which are shared with the access roads of the quarry operation. Dust control on these roads is provided by application of water on the roads on an as-needed basis, by the use of a water truck.

H. SAFETY PROGRAM

Safety considerations consist of fire control, dust control access control and communication equipment.

Protection against fires shall include providing fire extinguishers on the landfill equipment. In addition, the operator will be on the alert for any indication that a load may be smoldering and about to ignite. If a smoking or smoldering load is observed, the solid waste should immediately be pushed away from the active working face and spread out as much as possible. A thick layer of soil should then be spread over the solid waste and compacted to effectively smother the fire. The sealed solid waste should be observed for several days and, if any signs of smoke appears, more soil should be spread and compacted over the solid waste. It may be necessary to leave the "hot" solid waste sealed for several days, to a week or more, before incorporating it into the active working face. If an obvious "hot load" should arrive, the truck should immediately be routed to an area away from the working face and the previously described procedure employed.

If an area of the daily cell should ignite or show signs of smoldering, a large enough area of the cell should be excavated to ensure that all of the hot material has been excavated and to allow a margin of safety for the operator. The excavated solid waste should be pushed as far from the active working face as possible and sealed as previously explained.

Access to the site will be limited to the posted hours, as previously stated. No scavenging will be permitted.

A telephone is provided in the landfill office to contact emergency services and agencies. Pickup trucks operated by supervisors are equipped with two-way radios to the office.

The dust control program is described in the previous section.

I. MONITORING

The monitoring program will include sampling gas, sludge, leachate, groundwater and surface water. All analyses will be performed by private laboratories.

The gas monitoring wells will be sampled quarterly starting just after their installation. Gas samples will be analyzed for explosive gas concentrations and these concentrations will be compared with the lower explosive limit of the gas.

Pretreated leachate discharged to the MSD sanitary sewer system will be monitored semiannually for: pH, BOD, antimony, arsenic, barium, beryllium, cadmium, chromium (total), copper, iron, lead, mercury, nickel, selenium, silver and zinc.

The three groundwater monitoring wells in the northeast corner of the landfill expansion area will be sampled and analyzed quarterly in accordance

with the monitoring program outlined for the West Lake Sanitary Landfill in Appendix B of the Operations Manual. The water level in these three wells will be measured and recorded monthly.

Surface water pumped from the quarry during the initial landfill years will be monitored in accordance with an NPDES permit.

Semiannually a composite sample of the leachate pumped from the various leachate sumps and wells and a sample of the leachate treatment plant sludge (provided sludge is being produced) will be collected and both will be analyzed for hazardous waste characteristics pursuant to 10 CSR 25-4.010 (2 through 5). The results of such tests will be submitted to MDNR within sixty days. If the leachate or sludge are found to be a hazardous waste, West Lake Landfill will properly handle such hazardous wastes in accordance with the Missouri Hazardous Waste Management Law, Rules and Regulations, by implementing the Hazardous Waste Contingency Plan outlined in Appendix E.

J. RECORD KEEPING

Records will be maintained on a daily basis consisting of the following information:

1. Major operational problems, complaints or difficulties.
2. Cover material operations.
3. Vector control efforts.
4. Dust and litter control efforts.
5. The estimated quantity of solid waste received on each calendar day.

6. The approximate quantity of surface water pumped from the quarry daily shall be recorded.

The results of gas monitoring and analysis of leachate treatment efficiencies shall be recorded and maintained. See PART IV of the Operations Manual for more details on the maintenance of records.

K. CLOSURE

Final soil cover and seeding of the landfill surface will be accomplished as previously noted. Maintenance of the surface will be provided by filling settled areas with soil and reseeding to maintain proper surface drainage. The surface drainage system, leachate management system, and gas collection and monitoring system will continue to be maintained by the landfill operator as required. These systems will be maintained for at least 20 years after the closure of the landfill.

Upon closing of the sanitary landfill, an engineering drawing showing the location, type and approximate depth of the landfilled waste will be recorded with the St. Louis County recorder of deeds. The location and necessary maintenance of the leachate management system and gas control system will be noted on the drawing recorded.

* * * * *

PART IV

POST-CLOSURE PLAN

A. PERIOD

A definitive post-closure care period has not been established. Some parts of the post-closure care program may continue longer than others since it is proposed to continue each until it is shown to be unnecessary. Therefore, it is proposed to provide a perpetual care fund, that is, the annual interest earned by the fund would pay the annual post-closure care program costs indefinitely.

B. PROGRAM

The post-closure care program will consist of:

- Site inspection for cracks, erosion, and reestablishment of vegetation (and corrective actions as required),
- Landfill gas removal and utilization,
- Leachate removal, treatment, and discharge to a sanitary sewer, and
- Record keeping.

1. SITE INSPECTION

The site will be inspected quarterly for cracks, erosion and vegetation establishment. The inspections will be accomplished by walking the site and recording problems and their locations. Corrective action will be taken immediately to correct the problems.

2. LANDFILL GAS REMOVAL AND UTILIZATION

The landfill will be constructed with gas collection facilities. It is expected that by the time the post-closure care program begins the gas will be burned on site to generate electricity. The electricity will, in turn, be used to power on-site equipment and possibly for commercial sale. However, until the gas utilization system is installed, it will be assumed that all electricity used on-site during the post-closure care period will be purchased.

3. LEACHATE REMOVAL, TREATMENT AND DISCHARGE TO A SANITARY SEWER

Leachate will continue to be removed from the site during the post-closure period. The operation of the leachate treatment and discharge facilities will continue to be essentially the same as the operations carried on during active placement of refuse in the landfill. These operations were discussed in PART II.

Although somewhat less than 100 gallons per minute of leachate is expected, a conservative value of 200 gallons per minute was assumed for preparing the cost estimate. At this leachate removal rate, it is expected that most of the flow will not require treatment in the lime precipitation unit in order to meet the Metropolitan St. Louis Sewer District's (MSD's) pretreatment discharge limits. The leachate will be

monitored semi-annually for the following parameters to ensure compliance with MSD's pretreatment standards:

pH	Nickel
BOD	Selenium
COD	Silver
Antimony	Zinc
Arsenic	Iron
Barium	Endrin
Beryllium	Lindane
Cadmium	Methoxychlor
Chromium (total)	Toxaphene
Copper	2,4 D
Lead	2,4,5-TP
Mercury	

In addition, samples from the 3 monitoring wells in the northeast corner of the landfill expansion will be analyzed quarterly for the parameters listed in the attached Missouri Department of Natural Resources' document "Groundwater Monitoring Parameters for Sanitary Landfills." The sample collection and analysis will be provided by a qualified private laboratory.

4. RECORD KEEPING

All inspection reports, work orders, invoices, and test results generated by the post-closure care program will be kept on file by Westlake Landfill, Inc., or the successor firm hired to carry out the program.

C. COSTS

The annual post-closure care cost (1985 dollars) is estimated to be $105,600. This cost includes site inspections, final cover repair, seeding repair, leachate treatment and discharge to the sanitary sewer, leachate and groundwater monitoring, and record keeping.

A breakdown of the estimated costs is as follows:

Item	Cost
Site Inspection: Performed quarterly, requiring one person approximately 8 hours/day @ $25/hour.	
Labor	$ 800
Final Cover Repair: Assumes replacement of topsoil to a one-foot depth over 5% of site each year @ $2.00/cu. yd topsoil moved and placed.	
Labor	$ 2,400
Equipment	2,900
Seeding Repair: Assumes reseeding of 10% of site each year @ $1,250/acre.	
Labor	$ 3,000
Equipment	1,000
Materials	100
Leachate Pumping, Treatment and System Supervision (Including Aeration): At $0.05/kWh, $65/ton lime, and $25/hour labor.	
Energy	$17,800
Maintenance	2,400
Chemicals	20,400
Labor	13,000

Item	Cost
Leachate Disposal: Includes 200 gpm discharge to MSD sewer @ $0.26/100 cubic feet.	
Disposal Fee	$36,400
Leachate and Groundwater Monitoring: Includes monitoring program as discussed @ $200/day sampling cost, $545/sample for leachate analyses, and $735/year/well for groundwater analyses.	
Labor	$ 800
Lab Fees	4,100
Record Keeping: Assumes 20 hours/year @ $25 per hour.	
Labor	$ 500
TOTAL	$105,600

D. ESCROW REQUIREMENTS

Annual escrow account contributions to provide a perpetual care fund were estimated assuming the following:

- Annual payments into fund over 20 years.
- Fund accrues interest at a constant dollar interest rate of 5 percent. (A constant dollar interest rate is a measure of the real time value of money neglecting inflation effects. However, in terms of actual cash flow, inflation of annual costs is accounted for by the difference between the actual interest rate and the constant dollar interest rate.)

- Annual constant dollar interest required during post-closure is $105,600.
- Required escrow fund = $105,600/.05 = $2,112,000 and
- Required annual contribution = $2,112,000 x .03024 (sinking fund factor, 20 yrs, 5%) = $63,900

Therefore, $64,000 per year will be placed in an escrow account for the first 20 years of the landfill life. At the end of the twenty-first year and every year end thereafter, 5 percent of the end-of-year escrow fund balance will be withdrawn to pay for post-closure care during that year. In order to maintain the perpetual care fund, this constant percentage will be withdrawn each year. If actual post-closure care costs during the year are greater than the fund withdrawal, the Owner will pay for the difference with other funds. Likewise, if actual costs are less than the withdrawal amount, the excess withdrawal funds will accrue to the Owner.

* * * * * *

APPENDIX A – SOIL ANALYSES

2

From the office of

KANSAS CITY TESTING LABORATORY
2012 WEST 104TH STREET A.C. 913—648-2303
P. O. BOX 6323 SHAWNEE MISSION, KANSAS 66206

June 3, 1985

Burns & McDonnell Engineers
P. O. Box 173
Kansas City, Missouri 64141

Attention: Mr. Stathis Payiatakis

Reference: Westlake
B&M #84-075-1-001

REPORT OF PROCTOR DATA

Date Delivered: 5/29/85
KCTL Number: 3855

DESCRIPTION: Light brown slightly mottled clayey silt with a trace of iron nodules 98.2% passing 200 sieve

LOCATION: Hill sample

MOISTURE DENSITY RELATIONSHIP: ASTM D-698

OPTIMUM MOISTURE: 18.4%

MAXIMUM DRY UNIT WEIGHT: 105.9 pcf

Thank you for your continued interest in Kansas City Testing Laboratory.

Respectfully submitted,
KANSAS CITY TESTING LABORATORY

Diana Long

Diana Long

DL/mt

LAI 0188

KANSAS CITY TESTING LABORATORY

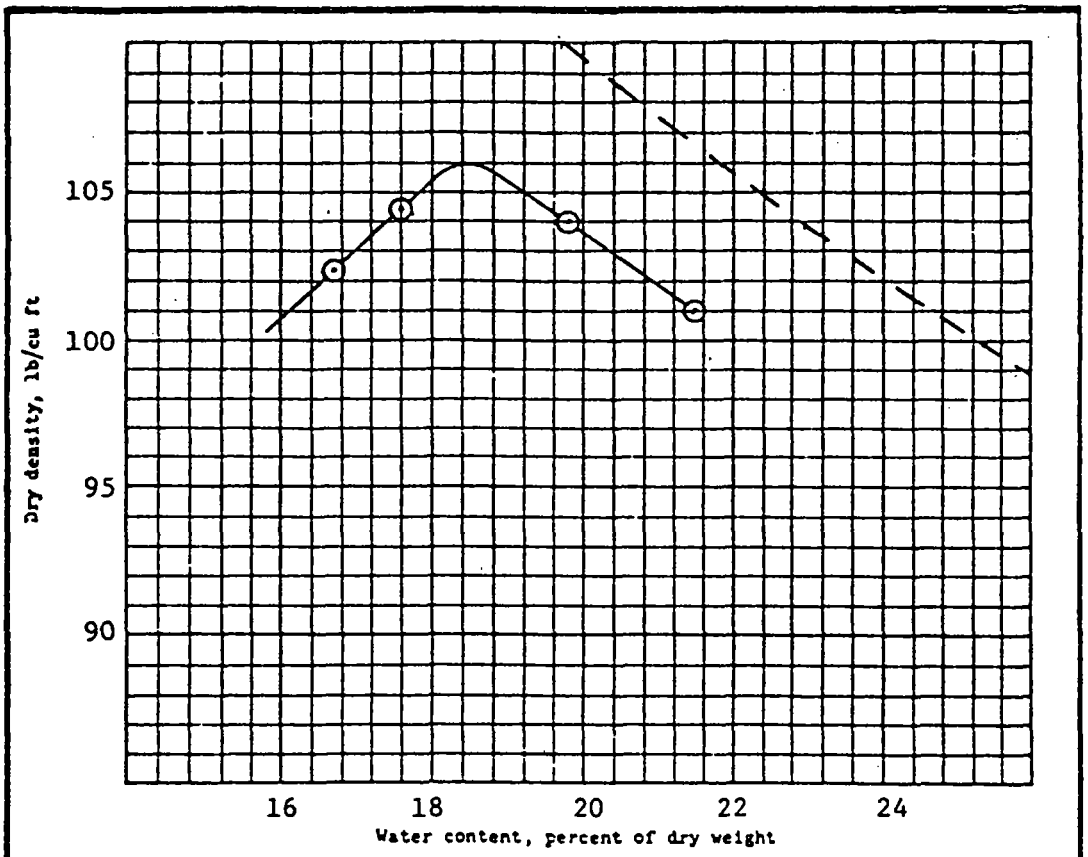

ASTM D-698 compaction test

25 blows per each of 3 layers, with 5.5 lb rammer and 12 inch drop. 4 inch diameter mold

Sample No.	Elev or Depth	Classification	G	LL	PL	% > No. 4	% > 3/4 in.
B			2.70*	34	25		
		*Assumed					

Sample No.	3855			
Natural water content, percent	27.0			
Optimum water content, percent	18.4			
Max dry density, lb/cu ft	105.9			

Remarks LIGHT BROWN	Project	WESTLAKE	
SLIGHTLY MOTTLED		BURNS & MCDONNELL ENGINEERS	
CLAYEY SILT WITH A	Area	HILL SAMPLE	
TRACE OF IRON NODULES	Boring No.		Date 5/29/85
98.2% PASSING 200 SIEVE	COMPACTION TEST REPORT		

2

From the office of

KANSAS CITY TESTING LABORATORY

2012 WEST 104TH STREET A.C. 913—648-2303
P. O. BOX 6323 SHAWNEE MISSION, KANSAS 66206

June 3, 1985

Burns & McDonnell Engineers
P. O. Box 173
Kansas City, Missouri 64141

Attention: Mr. Stathis Payiatakis

Reference: Westlake
B&M #84-075-1-001

REPORT OF PROCTOR DATA

Date Delivered: 5/29/85
KCTL Number: 3856

DESCRIPTION: Tan brown clayey silt with a trace of root hairs 99.6% passing 200 sieve

LOCATION: Bank cut

MOISTURE DENSITY RELATIONSHIP: ASTM D-698

OPTIMUM MOISTURE: 17.1%

MAXIMUM DRY UNIT WEIGHT: 107.4 pcf

Thank you for your continued interest in Kansas City Testing Laboratory.

Respectfully submitted,
KANSAS CITY TESTING LABORATORY

Diana Long

Diana Long

DL/mt

LAI 0189

RECEIVED
JUN 5 1985
BURNS & McDONNELL
K. C. Office

KANSAS CITY TESTING LABORATORY

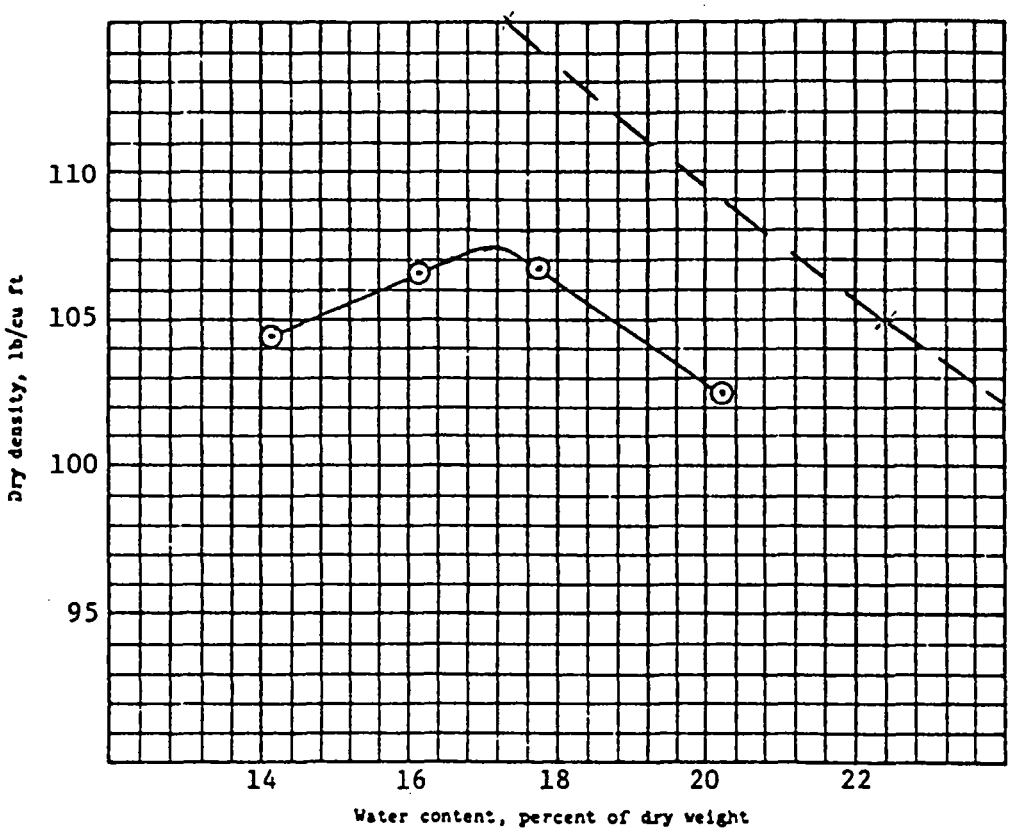

ASTM D-698 compaction test

25 blows per each of 3 layers, with 5.5 lb rammer and

12 inch drop. 4 inch diameter mold

Sample No.	Elev or Depth	Classification	G	LL	PL	% > No. 4	% > 3/4 in.
A		CL	2.70*	32	23		
		*Assumed					

Sample No.	3856			
Natural water content, percent	18.0			
Optimum water content, percent	17.1			
Max dry density, lb/cu ft	107.4			

Remarks TAN BROWN	Project WESTLAKE
CLAYEY SILT WITH A	BURNS & MCDONNELL ENGINEERS
TRACE OF ROOT HAIRS	Area BANK CUT
99.6% PASSING 200	Boring No. / Date 5/29/85
SIEVE	COMPACTION TEST REPORT

11 pgs

APPENDIX B – PERIMETER LEACHATE DRAINAGE ANALYSIS

LAI 0190

APPENDIX B

PERIMETER LEACHATE DRAINAGE ANALYSIS

A. EVALUATE NEED FOR PERIMETER DRAINAGE OF LEACHATE

ASSUMPTIONS:

1. Annual precipitation = 37/year.

2. Evaporation = 35% of precipitation.

3. Field storage of solid waste and soil cover = 15% by volume.

4. Expansion landfill = 33 acres.

5. Annual landfill volume (including cover) = 400,000 yd^3

CALCULATIONS:

Net annual percolation = precipitation-evaporation-field storage

Evaporation = 0.35 (37 in/yr) = 13 in/yr.

Field storage =

$$400{,}000\ yd^3 \times .15 \times \frac{1}{33\ acres} \times \frac{acre}{43{,}560\ ft^2} \times \frac{27ft^3}{yd^3} \times 12\ \frac{in}{ft} = 13.5\ in.$$

Therefore, net annual percolation = 37-13-13.5 = 10.5 in.

and

$$10.5 \frac{in}{yr} \times 2.54 \frac{cm}{in} \times \frac{yr}{8,760\ hr} \times \frac{hr}{3,600\ sec} = 8.5 \times 10^{-7} \frac{cm}{sec}$$

ANALYSIS:

1. Since v = ki and assuming hydraulic gradient (i) of 1, the net annual percolation ($v = 8.5 \times 10^{-7}$ cm/sec) can be drained through the landfill if the vertical permeability of the landfill is equal to or greater than 8.5×10^{-7} cm/sec. The cover soil has been classified as a clayey silt and should exhibit a minimum permeability of 10^{-6} cm/sec when placed as daily cover (i.e. without regard to optimum compaction). Therefore, ponding of water above the soil cover layers should be relatively minor (in terms of inches) and only during wet periods. Over the entire year no net accumulation of water should occur.

2. Since minor seasonal ponding may occur over the soil cover, the following measures are included in the proposed landfill design and operations to provide a factor of safety in the vertical drainage of leachate along the landfill boundary:

   a. Slope lifts away from the quarry wall at a minimum 3% for a minimum of 100 feet.

b. Remove cover soil within 25 feet of the quarry wall prior to placing additional refuse. This will eliminate the lower permeability

soil layer and allow more rapid leachate drainage along the quarry wall. Permeability of the compacted waste is estimated to be in the range of 10^{-5} to 10^{-3} cm/sec.

c. Provide chimney drains at 200-foot intervals along the quarry wall to assure that a downward drainage pathway for the leachate is provided in the boundary zone.

APPENDIX C – LETTER FROM ST. LOUIS MSD

METROPOLITAN ST. LOUIS SEWER DISTRICT

May 30, 1985

Mr. Robert M. Robinson, P.E.
Project Manager
Burns & McDonnell
Engineers-Architects-Consultants
4800 East 63rd St.
P.O. Box 173
Kansas City, MO 64141

RE: Old St. Charles Rock Road
260'± W. of Taussig
(West Lake Landfill, Inc.)
M.S.D. Reference No. P-10500

Dear Mr. Robinson:

We have investigated the capacities of the 10 inch sanitary sewer down stream of the West Lake Landfill site and found that 150 gallons per minute could be added to the 10 inch line before the line became overcharged.

If flows from your site were to exceed 150 gallons per minute, they could be accommodated at off-peak sanitary flow times between midnight and 6 a.m. Since there is storage capacity for leachate on your site, a higher flow in the off-peak hours could be accomplished. The off-peak flow should be limited to 300 gallons per minute.

If there are any questions, please call.

Yours truly,

Robert G. Butchko

Robert G. Butchko
Director of Engineering

RGB:JWT:vm

cc Jim W. Thompson

RECEIVED
JUN 3 1985
BURNS & McDONNELL
K.C. OFFICE

2000 HAMPTON AVENUE • ST. LOUIS, MISSOURI 63139-2979 • 768-6200

APPENDIX D – LETTER FROM EQUIPMENT COMPANY

FABICK

JOHN FABICK TRACTOR COMPANY

One Fabick Drive, Fenton, St. Louis County, Missouri 63026
(314) 343-5900 Telex: 044-7325 Cable: FABTRAC

June 26, 1985

West Lake Landfill
13570 St. Charles Rock Road
St. Louis, Missouri 63044

Attention: Mr. Bill McCullough

Dear Bill:

I want to elaborate on some of your questions raised during our conversation last week. Fabick generally keeps a large inventory of machinery which is used in various facets of the construction and mining industries. In reference to machinery you would use on your project, we normally keep new and used machinery of this type in inventory.

At this time, I feel John Fabick Tractor Company has the capabilities to supply equipment, parts and service as your needs dictate.

If we can be of further help, please call.

Yours very truly,

JOHN FABICK TRACTOR COMPANY

Steve Brunk

Steve Brunk
Sales Representative

SB/dsb3n

APPENDIX E – HAZARDOUS WASTE CONTINGENCY PLAN

HAZARDOUS WASTE CONTINGENCY PLAN
WEST LAKE LANDFILL, INC.

Introduction

West Landfill, Inc. collects and provides pretreatment for the leachate generated from the various landfill's units. Testing the leachate or sludge from the pretreatment plant have not shown either to be classified as a hazardous waste. However, in the event testing would find one or both to be a hazardous waste, West Lake Landfill, Inc. would need to implement the following contingency plan.

Pretreatment Plant Sludge Found Hazardous

1. Stop operation of pretreatment plant and pump all leachate to the large holding lagoon for treatment, aeration and discharge to MSD.

2. Conduct representative sampling of the sludge to confirm or disprove the finding that the sludge is hazardous.

3. Prepare plan to cleanup and properly dispose of any sludge found to be hazardous.

4. Conduct study to determine how pretreatment process can be altered so a hazardous waste sludge is not generated.

5. If the sludge cannot be made nonhazardous, then a decision will need to be made whether the lime treatment plant is an essential unit within the leachate pretreatment system. If it is, then the sludge handling and disposal system will need to be designed and operated to comply with hazardous waste regulations.

Leachate Found Hazardous

The leachate is pumped from various collection wells, therefore, in view of the fact that the leachate has never been found to test out as a hazardous waste, it is assumed that less than 50 gpm of the waste (leachate) stream has tested out a hazardous waste.

1. The hazardous waste (leachate) stream will be pumped directly to the lime precipitation pretreatment plant for treatment.

2. None of the hazardous waste leachate will be pumped to the large storage lagoon.

3. The pretreatment plant which discharges to MSD is exempt from obtaining a hazardous waste treatment permit.

4. A monthly testing program would be implemented to make sure the effluent and sludge from the pretreatment plant was not a hazardous waste. A new testing program would also be implemented to check the various leachate streams for hazardous waste characteristics.

Leachate and Sludge Found Hazardous

1. The hazardous waste leachate would be pumped directly to the lime precipitation pretreatment plant for treatment.

2. The sludge would be contained in a metal tank for storage.

3. Necessary arrangements will be made to file with the MDNR as a hazardous waste generator of sludge.

4. A plan will be developed for disposal of the sludge and meet sludge storage requirements.

5. The treatment process will be evaluated to seek ways to produce a non-hazardous sludge.

Burns & McDonnell
ENGINEERS - ARCHITECTS - CONSULTANTS

January 8, 1986

Mr. William E. Whitaker, President
West Lake Landfill, Inc.
13570 St. Charles Rock Road
Bridgeton MO 63044

Revised Drawings and Reports
West Lake Sanitary Landfill
Project 84-075-1-001

Dear Mr. Whitaker:

Please find one copy each of the revised "Permit Application and Engineering Report," "Operations Manual" and the engineering drawings for the West Lake Sanitary Landfill expansion. If these reports and drawings have been revised to your satisfaction, we will forward the Missouri Department of Natural Resources the two copies they have requested. Additional copies will also be forwarded to your office.

We expect to complete the training manual you requested within a few days.

Sincerely,

Robert M. Robinson

Robert M. Robinson, P.E.
Project Manager

RMR/gph

Enclosure

LAI 0191

4800 EAST 63rd STREET, P.O. BOX 173, KANSAS CITY, MISSOURI 64141 • TEL: 816-333-4375 TWX: 910-771-3059

West Lake Landfill, Inc.

13570 St. Charles Rock Road
Bridgeton, Missouri 63044

W. E. WHITAKER
PRESIDENT

TELEPHONE
314 739-1122

March 18, 1986

CERTIFIED MAIL P258718640

Frederich A. Brunner, Ph.D.
Director
Department of Natural Resources
P.O. Box 176
Jefferson City, Missouri 65102

Dear Dr. Brunner:

Enclosed are two (2) copies of the Permit Application and Engineering Report, including drawings, and the Operations Manual as required under paragraph 13 of the conditions section of the Solid Waste Disposal Area Operating Permit No. 118912 issued to West Lake Landfill, Inc. on November 18, 1985.

Very truly yours,

WEST LAKE LANDFILL, INC.

W. E. Whitaker
President

PS Form 3811, Feb. 1979

SENDER: Complete items 1, 2, and 3. Add your address in the "RETURN TO" space on reverse.

1. The following service is requested (check one.)
- ☐ Show to whom and date delivered. ____¢
- ☐ Show to whom, date and address of delivery. ____¢
- ☐ RESTRICTED DELIVERY
  - Show to whom and date delivered. ____¢
- ☐ RESTRICTED DELIVERY.
  - Show to whom, date, and address of delivery $____

(CONSULT POSTMASTER FOR FEES)

2. ARTICLE ADDRESSED TO:
Dr. Frederich A. Brunner, DNR
P.O. Box 176
Jefferson City, Mo. 65102

3. ARTICLE DESCRIPTION:

REGISTERED NO.	CERTIFIED NO.	INSURED NO.
	P258718640	

(Always obtain signature of addressee or agent)

I have received the article described above.
SIGNATURE ☐Addressee ☐Authorized agent

4. DATE OF DELIVERY — POSTMARK

5. ADDRESS (Complete only if requested)

6. UNABLE TO DELIVER BECAUSE: — CLERK'S INITIALS

RETURN RECEIPT, REGISTERED, INSURED AND CERTIFIED MAIL

☆GPO : 1979-300-459

P 258 718 640

RECEIPT FOR CERTIFIED MAIL
NO INSURANCE COVERAGE PROVIDED
NOT FOR INTERNATIONAL MAIL
(See Reverse)

Sent to Dr. Frederich A. Brunner	
Street and No. P.O. Box 176	
P.O., State and ZIP Code Jefferson City, Mo. 65102	
Postage	$3.18
Certified Fee	.75
Special Delivery Fee	
Restricted Delivery Fee	
Return Receipt showing to whom and Date Delivered	.70
Return Receipt showing to whom, Date, and Address of Delivery	
TOTAL Postage and Fees	$4.63
Postmark or Date	

PS Form 3800, June 1985 * U.S.G.P.O. 1985-480-784

LAI 0192

JOHN ASHCROFT
Governor

FREDERICK A. BRUNNER
Director

STATE OF MISSOURI
DEPARTMENT OF NATURAL RESOURCES

DIVISION OF ENVIRONMENTAL QUALITY
P.O. Box 176
Jefferson City, MO 65102

Division of Energy
Division of Environmental Quality
Division of Geology and Land Survey
Division of Management Services
Division of Parks, Recreation, and Historic Preservation

2

WEST LAKE COMPANIES
RECEIVED
MAR 18 1987
PRESIDENT

March 13, 1987

Mr. William E. Whitaker
West Lake Landfill, Inc.
13570 St. Charles Rock Road
Bridgeton, Missouri 63044

Dear Mr. Whitaker:

RE: Landfill Gas Utilization System, West Lake Sanitary Landfill Permit Number 118912, St. Louis County.

A request for approval to expand the methane gas collection system and utilize the gas in the operation of the on-site asphalt plant was received on October 27, 1986 by the Waste Management Program (WMP).

The expansion consists of nine (9) collection wells, approximately 3015 feet of collection pipe, a moisture removal unit, a blower building and a waste gas flare.

The expansion of the gas collection and utilization system is hereby approved as submitted on the documents listed below.

Documents

1. Letter from Mr. Robert M. Robinson, P.E., Burns & McDonnell, to Mr. Thomas R. Gredell, P.E., WMP dated October 24, 1986.

2. Plan sheet number 3, titled Final Contours and Gas Collection System, dated June 25, 1985, revised October 13, 1986, and plan sheets number 6, 7, and 8 titled respectively, Gas Collection System Details, Blower Building Plan and Details, and Gas Collection System Details, Electrical, dated October 13, 1986. All plan sheets were prepared by Burns & McDonnell.

Condition

The following condition is an integral part of this approval.

1. Continue to comply with all local requirements and maintain all necessary local permits and approvals.

Should you have any questions, please contact Mr. Mike Phillips at (314) 751-3176.

Sincerely,

DIVISION OF ENVIRONMENTAL QUALITY

R. Stan Jorgensen

R. Stan Jorgensen, Director
Waste Management Program

RSJ:mpl

cc: Mr. Robert M. Robinson, P.E., Burns & McDonnell
Mr. Blaine J. Rhodes, Project Manager, Dept. of Health and Medical Care

CC: Bill Conney
Larry Bocketing

7

ENVIRODYNE ENGINEERS

12161 Lackland Road
St. Louis, Missouri 63146
(314) 434-6960

REPORT OF ANALYSIS

CLIENT: BURNS & McDONNELL
4800 E. 63rd Street
P.O. Box 173
Kansas City, Missouri 64141
ATTN: Robert M. Robinson

PROJ. #: 3060-00377
P.O. #:

REPORT DATE: April 4, 1986
SAMPLE ANALYZED: gaseous samples for prior pollutant volatile organic compounds. methane
DATE RECEIVED: March 25-26, 1986
METHOD USED: EPA Approved Methods

Only those priority pollutant volatile organic compounds detected are listed.

SAMPLE	COMPOUND	CONC. (ug/l)
WESTLAKE	BENZENE	5
	CHLOROBENZENE	9
	1,1-DICHLOROETHANE	17
	ETHYLBENZENE	26
	TETRACHLOROETHYLENE	75
	TOLUENE	233
	1,2-trans-DICHLOROETHYLENE	24
	TRICHLOROETHYLENE	49

NOTE: UG MASS PER LITER VOLUME GASEOUS SAMPLE EQUALS PARTS PER MILLION.

APPROVED: John J. Craig

LAI 0194

Recovering Methane Gas - Now

Recovering methane gas from solid waste landfills is usually a waiting game--gas recovery usually doesn't begin until the landfill reaches its final elevation, which often means waiting years.

Two Burns & McDonnell landfill projects in St. Louis, Missouri won't have to wait until the end to begin. The Westlake and New Halls Ferry landfills will recover methane gas internally during the entire life cycles of the privately-owned operations.

"Internal gas recovery, a new concept in landfill operation, helps offset operating costs," says project manager Robert Robinson. "Westlake will use landfill gas to operate the company's on-site asphalt plant. New Halls Ferry plans to burn landfill gas onsite to generate electricity to operate its leachate treatment system."

Robert Robinson

For the Westlake landfill, Burns & McDonnell designed an expansion at an existing landfill, along with the internal gas collection system. For the New Halls Ferry project, Burns & McDonnell's solid waste consultants helped the owner/operator prepare the permit application, which was approved by the state earlier this year. Now, Burns & McDonnell is preparing site development and contract documents for the 200-foot-deep, 33-acre site, along with the methane recovery system and the leachate treatment system. Both landfill projects are helping to reclaim abandoned limestone quarries.

In other recent St. Louis area solid waste projects, Burns & McDonnell has redesigned the existing West County landfill and designed a proposed expansion of the St. Louis County landfill, which includes gas control and leachate collection systems.

This landfill project is helping to reclaim an abandoned limestone quarry near St. Louis.

AT&T Bubbles Emissions

Today, electronic and microelectronic devices are a major part of AT&T Technology Systems' production at their Kansas City Works. More than 125 separate exhaust systems generate more than a million cubic feet per minute of exhausted air. Inventorying the volatile organic compounds (VOCs) and total suspended particles (TSPs) for state air quality permits has never been a small task.

It took several people months of effort to inventory the emissions for the Missouri Department of Natural Resources. Now, it is about a week's effort for one person.

Burns & McDonnell worked with AT&T's environmental staff to develop a new inventory methodology that enables the Kansas City Works to operate within a bubble, or envelope, established by the total emission levels for VOCs and TSPs. Under the bubble plan, no additional permits are required for process changes, provided that no net increase in emissions is realized or no major new processes are added. This is especially attractive to the Kansas City Works because of the multiplicity of products produced and raw materials used, as well as the use of certain equipment to serve multiple products.

In addition to being more accurate, the inventory method also benefits the state in other ways. The DNR now receives a short computer tape that inputs data directly to their inventory program, which simplifies data processing and reduces manpower requirements.

WEST L E COMPANIES
RECEIVED
APR 29 1985
PRESIDENT

BENCH MARK Article on Solid Waste - Draft

Recovering methane gas from solid waste landfills is usually a waiting game—gas recovery usually doesn't begin until the landfill reaches its final elevation, which often means waiting years.

Two Burns & McDonnell landfill projects in St. Louis, Missouri won't have to wait until the end to begin. The Westlake and New Halls Ferry landfills will recover methane gas internally during the entire life cycles of the privately-owned operations.

"Internal gas recovery, a new concept in landfill operation, helps offset operating costs," says project manager Robert Robinson. "Westlake will use landfill gas to operate the company's on-site asphalt plant. New Halls Ferry plans to burn landfill gas onsite to generate electricity to operate its leachate treatment system."

For the Westlake landfill, Burns & McDonnell designed an expansion at an existing landfill, along with the internal gas collection system. For the New Halls Ferry project, Burns & McDonnell's solid waste consultants helped the owner/operator prepare the permit application, which was approved by the state earlier this year. Now Burns & McDonnell is preparing site development and contract documents for the 200-foot-deep, 33-acre site, along with the methane recovery system and the leachate treatment system. Both landfill projects are helping to reclaim abandoned limestone quarries.

In other recent St. Louis area solid waste projects, Burns & McDonnell has redesigned the existing West County landfill and designed a proposed expansion of the St. Louis County landfill, which includes gas control and leachate collection systems.

MONITORING PROGRAM FOR THE

WEST LAKE LANDFILL, INC. SANITARY LANDFILL

A. Monitoring Points

The monitoring points (both surface and subsurface) listed below are those for which your landfill is responsible for sampling and analyzing. Both the current name, number or designation (as according to our records) and a new four digit number are listed for each point. The four digit number is that which will appear on the computer reporting forms (see section E) and should be used in any future correspondence.

PERMIT NUMBER	CURRENT MONITORING DESIGNATION	NEW FOUR DIGIT MONITORING NUMBER
118912	GWMW 4/III	1201
118912	GWMW 14/III	1202
118912	GWMW 17/IV	1203

B. Frequency

All monitoring points are to be sampled on a quarterly basis. An annual sample and analysis for an extended list of parameters must be conducted by the landfill. During the quarter that the annual analysis must also be conducted, two separate samples need not be collected (i.e. one sample can be collected for both quarterly and annual parameters). However, results for the quarterly parameters must still be submitted by the end of the following month. Landfills are given approximately 90 days to submit results for the annual analysis. (The Department also conducts this annual analysis). Below are listed the months during which samples must be taken and reports submitted.

QUARTER	SAMPLES TAKEN	REPORTS SUBMITTED
1st	February	March
2nd	May	June (Quarterly Results Only) August (Annual Results Only)
3rd	August	September
4th	November	December

C. Parameters

Below are listed the parameters that samples are to be analyzed for during the quarterly and annual/background sampling. (Background sampling is to be performed prior to initiating operation of a new landfill or newly permitted areas where the monitoring points are located.) Annual sampling is to be conducted during the second quarter.

ANNUAL/BACKGROUND LIST	QUARTERLY LIST
pH	chloride
conductivity	COD
cobalt	iron
total dissolved solids	pH
chloride	conductivity
sulfate	total dissolved solids
fluoride	water level in the well - report depth from ground surface to the water, and the depth of water.
total hardness - calculated	
barium	
boron	
cadmium	
chromium	
copper	
color } Observation Only	
odor } Observation Only	
calcium	
sodium	
COD	
ammonia as N	
nitrate and nitrate as N	
total phosphorus	
mercury	
iron	
arsenic	
lead	
selenium	
silver	
manganese	
zinc	
Water level in the well - report depth from ground surface to the water, and the depth of water.	
magnesium	

ALL METALS ARE DISSOLVED.

D. Collection, Preservation and Analysis

(See the attached Technical Bulletin for the correct procedures. Note that bailers should be rinsed with distilled water between each sample collection. Water levels are to be recorded prior to bailing. Failure to follow these procedures will void the monitoring report.)

E. Report Form

To insure that all required information is submitted and to remove any confusion between the Waste Management Program, the landfill, and private laboratories, reporting forms from the program will be sent to the landfill at the beginning of each quarter, in the spring for the annual sampling, and for background samples when new points are designated. (Attached is an example of such a form). These forms are to be completed by the collector and the lab performing the analysis. The original is to be sent to the address noted on the lower right hand corner. A report need not be sent to the regional office.

The items listed below will be completed by the department prior to your receiving the form.

1. Quarter Number
2. Site Name
3. Monitoring Point Number
4. When analysis is to be completed.
5. When results are to be forwarded.

The form indicates the sensitivity of analysis for each parameter. Note that measurements are reported in units of mg/l or ug/l depending on the parameter. IF A MONITORING POINT IS DRY REPORT THE WATER LEVEL IN THE WELL AS 0.0 (DO THIS FOR SURFACE POINTS WHICH

ARE ALSO DRY). DO NOT LEAVE THE FORM BLANK. IF SURFACE POINTS CONTAIN WATER LEAVE THE WATER LEVEL PARAMETER BLANK. ANY INCOMPLETE FORM WHICH IS SUBMITTED WILL RENDER THE REPORT VOID AND WILL NECESSITATE REPEATING THE SAMPLING. THE SECTIONS LABELED COMMENTS SHOULD INCLUDE A LIST OF SAMPLE PRESERVATIVES IF THERE ARE DEVIATIONS FROM THOSE NOTED IN THE TECHNICAL BULLETIN.

ONLY ONE SAMPLE NEEDS TO BE TAKEN DURING MAY; HOWEVER, QUARTERLY PARAMETER RESULTS NEED TO BE SUBMITTED DURING JUNE. THE ANNUAL RESULTS NEED NOT BE SUBMITTED UNTIL AUGUST. LANDFILLS WILL RECEIVE TWO FORMS DURING THE SECOND QUARTER FOR THIS PURPOSE.

HAZARDOUS WASTE CONTINGENCY PLAN
WEST LAKE LANDFILL, INC.

Introduction

West Landfill, Inc. collects and provides pretreatment for the leachate generated from the various landfill's units. Testing the leachate or sludge from the pretreatment plant have not shown either to be classified as a hazardous waste. However, in the event testing would find one or both to be a hazardous waste, West Lake Landfill, Inc. would need to implement the following contingency plan.

Pretreatment Plant Sludge Found Hazardous

1. Stop operation of pretreatment plant and pump all leachate to the large holding lagoon for treatment, aeration and discharge to MSD.

2. Conduct representative sampling of the sludge to confirm or disprove the finding that the sludge is hazardous.

3. Prepare plan to cleanup and properly dispose of any sludge found to be hazardous.

4. Conduct study to determine how pretreatment process can be altered so a hazardous waste sludge is not generated.

5. If the sludge cannot be made nonhazardous, then a decision will need to be made whether the lime treatment plant is an essential unit within the leachate pretreatment system. If it is, then the sludge handling and disposal system will need to be designed and operated to comply with hazardous waste regulations.

Leachate Found Hazardous

The leachate is pumped from various collection wells, therefore, in view of the fact that the leachate has never been found to test out as a hazardous waste, it is assumed that less than 50 gpm of the waste (leachate) stream has tested out a hazardous waste.

1. The hazardous waste (leachate) stream will be pumped directly to the lime precipitation pretreatment plant for treatment.

2. None of the hazardous waste leachate will be pumped to the large storage lagoon.

3. The pretreatment plant which discharges to MSD is exempt from obtaining a hazardous waste treatment permit.

4. A monthly testing program would be implemented to make sure the effluent and sludge from the pretreatment plant was not a hazardous waste. A new testing program would also be implemented to check the various leachate streams for hazardous waste characteristics.

Leachate and Sludge Found Hazardous

1. The hazardous waste leachate would be pumped directly to the lime precipitation pretreatment plant for treatment.

2. The sludge would be contained in a metal tank for storage.

3. Necessary arrangements will be made to file with the MDNR as a hazardous waste generator of sludge.

4. A plan will be developed for disposal of the sludge and meet sludge storage requirements.

5. The treatment process will be evaluated to seek ways to produce a non-hazardous sludge.

WASTE DISPOSAL MONITORING

Procedures and Duties:

The landfill manager will be responsible for all on-site operations. He will have knowledge of and experience in the principles of supervision and training and in all phases of landfill operations. Specifically, he will be knowledgeable of hazardous waste regulations with regard to screening hazardous waste from being accepted.

Day-to-day monitoring of waste arriving at the landfill site will be accomplished by the landfill spotter. The duties of the spotter will include the following:

1. Direct arriving traffic at the tipping area.
2. Observe wastes being dumped.
3. Detain transporter of barrels, containers and other wastes suspected of being hazardous waste.
4. Obtain information concerning the source of the waste.
5. Notify landfill manager.

The landfill manager then will:

1. Make decision to either accept or reject waste. (The waste will be rejected if the manager has reason to believe the waste is potentially hazardous.)
2. If the waste is rejected, advise transporter to return waste to the generator. In addition, rejections will be reported to MDNR promptly.

If an unauthorized waste is deposited on-site and not immediately detected, upon discovery the landfill manager will:

1. Advise transporter (if possible) and MDNR.
2. Isolate waste and store in metal roll-off container as soon as possible.
3. Consult with MDNR concerning final disposal.
4. Arrange to have the waste removed and disposed of only upon concurrence and instruction from MDNR.

Resources and Training:

The landfill manager will:

1. Have available a complete current set of Missouri regulations regarding the identification and listing hazardous waste and applicable references from U.S. EPA hazardous waste regulations.

2. Have available phone numbers of MDNR regional and central office contact people and a hazardous waste management consultant who can be contacted concerning specific wastes.

3. Attend a minimum of one seminar or conference emphasizing hazardous waste issues every two years.

The spotter will:

1. Maintain a list of special wastes that MDNR has authorized the landfill to accept including information on generator, type of waste and hauler.

2. Receive a minimum of one hour of training per quarter concerning hazardous waste identification and recognition. This training will be done by the landfill manager or a qualified hazardous waste management consultant.

Burns & McDonnell
ENGINEERS - ARCHITECTS - CONSULTANTS

June 22, 1987

WEST LAKE COMPANIES
RECEIVED
JUN 24 1987
PRESIDENT

Mr. Mike Phillips
Environmental Engineer
Waste Management Program
Missouri Department of
Natural Resources
P. O. Box 176
Jefferson City MO 65102

West Lake Sanitary Landfill
Project No. 84-075-1-001

Dear Mr. Phillips:

In accordance with our telephone conversation, I'm sending you two additional copies of Drawing No. 1 that shows the location of the proposed spray irrigation area at the West Lake Landfill. This regards our letter of April 28, 1987 requesting approval to spray irrigate completed landfill areas.

I understand the department has approved the proposal but needs additional copies of the drawing for the regional office.

Sincerely,

Robert M. Robinson

Robert M. Robinson, P.E.
Project Manager

RMR/gph

Enclosure

cc: West Lake Landfill, Inc.

cc: Bill Carney
Larry Bocking

LAI 0196

4800 EAST 63rd STREET, P.O. BOX 419173, KANSAS CITY, MISSOURI 64141-0173 • TEL: 816-333-4375 TWX:910-771-3059

2

Burns & McDonnell
ENGINEERS - ARCHITECTS - CONSULTANTS

July 29, 1987

Mr. Tom Gredell, P.E.
Mr. Jim Belcher
Waste Management Program
Missouri Department of Natural Resources
P.O. Box 176
Jefferson City, MO 65102

West Lake Landfill, Inc.
Bridgeton, Missouri
Project 84-075-1-001

Dear Mr. Gredell and Belcher:

This is to confirm the meeting you both agreed to schedule regarding various matters related to West Lake landfills and property. The meeting is scheduled for 10:00 A.M. on August 20, 1987 in the Jefferson Office Building, Jefferson City, Missouri. We appreciate the various program sections scheduling the meeting on the same date for our convenience. It is our understanding that the following topics will be addressed:

- Correcting the location of the low level uranium ore waste (uncontrolled sites) disposal areas.
- Receive and discuss MDNR's comments on the October, 1986 Hydrogeologic Investigation, West Lake Landfill, Primary Phase Report.
- Discuss Post Closure Financial Assurance Instrument provided MDNR shortly after the expansion permit was issued in 1985.
- Discuss the source of any documented information used in drafting the test for the West Lake Landfill's listing in the Registry of Confirmed Abandoned or Uncontrolled Hazardous Waste Disposal Sites in Missouri.

We anticipate at least the following individuals attending the meeting on behalf of West Lake Landfill, Inc.:

William E. Whitaker, President, West Lake Landfill, Inc.
Robert M. Robinson, P.E., Project Manager, Burns & McDonnell
Bill Shefchik, Geologist, Burns & McDonnell

Tom, if you have any draft comments available regarding the Hydrogeologic Investigation Report, it might expedite the meeting if we had the comment or questions in advance.

LAI 0197

4800 EAST 63rd STREET, P.O. BOX 419173, KANSAS CITY, MISSOURI 64141-0173

Again, thank you for scheduling this meeting.

Sincerely,

Robert M. Robinson, P.E.
Project Manager

RMR/jw

cc: William E. Whitaker, President

2

Burns & McDonnell
ENGINEERS - ARCHITECTS - CONSULTANTS

August 27, 1987

WEST LAKE COMPANIES
RECEIVED
AUG 31 1987
PRESIDENT

Mr. Tom Gredell, P.E.
Chief, Solid Waste Permit Section
Waste Management Program
Missouri Department of Natural Resources
P. O. Box 176
Jefferson City MO 65102

West Lake Sanitary Landfill -
Permit #118912
Project No. 84-075-1-001

Dear Mr. Gredell:

As we indicated during the meeting on August 20, 1987, West Lake Landfill, Inc. was planning to submit revised plans for the design of the "Chimney Drains" at the above sanitary landfill. Please find enclosed revised Drawing 5 which provides details of the proposed chimney drain design.

Basically, we are replacing the rock filled drain with a drainage net that has a geotextile bonded to both sides of the polyethylene drainage net. Enclosed is a specification sheet for the TENSAR Drainage Composite DC1200 which we plan to use or an equal product. A sample of the product is enclosed. This 64 inch wide Drainage Composite DC1200 will be laid against the quarry wall as landfill lifts are placed. The product can be purchased in 25' or 100 foot long rolls. The exposed roll will be covered with vinyl plastic to keep it clean until the next lift of waste is placed in the landfill. A detail has been provided on Drawing 5 showing how the ends of the drainage net rolls will be overlapped. It is also proposed to connect the drainage net to the gas recovery system. Two details for the Chimney Drain top section and gas collection piping are provided on Drawing 5 to illustrate how the construction will be done to facilitate gas recovery.

The flow capacity of a five foot wide strip of drainage net will exceed 14,000 gallons per day. The capacity of the twenty chimney drains substantially exceeds the total yearly rainfall on the entire 33 acre landfill without discounting the seepage through the waste and evaporation which will occur. The use of the bonded geotextile eliminates the risk of chimney drain clogging which possibly could have occurred with the rock drain construction.

4800 EAST 63rd STREET, P.O. BOX 419173, KANSAS CITY, MISSOURI 64141-0173 • TEL: 816-333-4375 TWX: 910-771-3059

Your early review and approval of this design revision will be appreciated.

Sincerely,

Robert M. Robinson, P.E.
Project Manager

RMR/gph

Enclosure

cc: West Lake Landfill, Inc.

JOHN ASHCROFT
Governor

FREDERICK A. BRUNNER
Director

STATE OF MISSOURI
DEPARTMENT OF NATURAL RESOURCES

Division of Energy
Division of Environmental Quality
Division of Geology and Land Survey
Division of Management Services
Division of Parks, Recreation, and Historic Preservation

DIVISION OF ENVIRONMENTAL QUALITY
P.O. Box 176
Jefferson City, MO 65102

WEST LAKE COMPANIES
RECEIVED
FEB 10 1988
PRESIDENT

February 8, 1988

Mr. William E. Whitaker
West Lake Landfill, Inc.
13570 St. Charles Rock Road
Bridgeton, MO 63044

Dear Mr. Whitaker:

RE: Chimney Drain Design, West Lake Sanitary Landfill, Permit Number 118912 St. Louis County.

A request to modify the chimney drains for the above referenced landfill was received on August 31, 1987 by the Waste Management Program (WMP).

The modification replaces the approved rock filled chimney drains with a polyethylene drainage net that has a geotextile bonded to both sides. The proposal specifies the use of the TENSAR Drainage Composite DC1200 or a product of equal specifications and characteristics.

The modification of the chimney drain design is hereby approved as submitted on the documents listed below.

Documents

1. Letter from Mr. Robert M. Robinson, P.E., Burns & McDonnell, to Mr. Tom Gredell, P.E., Waste Management Program, dated August 27, 1987.

2. Plan sheet number 5, titled West Lake Landfill, Inc., Sanitary Landfill Expansion, Bridgeton, Missouri, dated June 25, 1985, revised August 28, 1987, prepared by Burns & McDonnell.

Should you have any questions, please contact Mr. Mike Phillips at (314) 751-3176.

Sincerely,

DIVISION OF ENVIRONMENTAL QUALITY

Nicholas A. Di Pasquale

Nicholas A. Di Pasquale, Director
Waste Management Program

NAD:mpl

cc: Mr. Robert M. Robinson, P.E., Burns & McDonnell

cc: Larry Bockstein

LAI 0199

LANDFILL

Daily Load Report

Date:_____ _____

Charge Loads:_____

Loads: Amount:

Cash Loads:_____ _____

Construction Fill (yds.) _____

Burning Pit (yds.) _____

Sanitary Fill (yds.) _____

Total Yards:_____

LAI 0200

6

PART IV

POST-CLOSURE PLAN

A. PERIOD

A definitive post-closure care period has not been established. Some parts of the post-closure care program may continue longer than others since it is proposed to continue each until it is shown to be unnecessary. Therefore, it is proposed to provide a perpetual care fund, that is, the annual interest earned by the fund would pay the annual post-closure care program costs indefinitely.

B. PROGRAM

The post-closure care program will consist of:

- Site inspection for cracks, erosion, and reestablishment of vegetation (and corrective actions as required),
- Landfill gas removal and utilization,
- Leachate removal, treatment, and discharge to a sanitary sewer, and
- Record keeping.

1. SITE INSPECTION

The site will be inspected quarterly for cracks, erosion and vegetation establishment. The inspections will be accomplished by walking the site and recording problems and their locations. Corrective action will be taken immediately to correct the problems.

LAI 0201

2. LANDFILL GAS REMOVAL AND UTILIZATION

The landfill will be constructed with gas collection facilities. It is expected that by the time the post-closure care program begins the gas will be burned on site to generate electricity. The electricity will, in turn, be used to power on-site equipment and possibly for commercial sale. However, until the gas utilization system is installed, it will be assumed that all electricity used on-site during the post-closure care period will be purchased.

3. LEACHATE REMOVAL, TREATMENT AND DISCHARGE TO A SANITARY SEWER

Leachate will continue to be removed from the site during the post-closure period. The operation of the leachate treatment and discharge facilities will continue to be essentially the same as the operations carried on during active placement of refuse in the landfill. These operations were discussed in PART II.

Although somewhat less than 100 gallons per minute of leachate is expected, a conservative value of 200 gallons per minute was assumed for preparing the cost estimate. At this leachate removal rate, it is expected that most of the flow will not require treatment in the lime precipitation unit in order to meet the Metropolitan St. Louis Sewer District's (MSD's) pretreatment discharge limits. The leachate will be

monitored semi-annually for the following parameters to ensure compliance with MSD's pretreatment standards:

pH	Nickel
BOD	Selenium
COD	Silver
Antimony	Zinc
Arsenic	Iron
Barium	Endrin
Beryllium	Lindane
Cadmium	Methoxychlor
Chromium (total)	Toxaphene
Copper	2,4 D
Lead	2,4,5-TP
Mercury	

In addition, samples from 4 piezometers will be analyzed quarterly for the parameters listed in the attached Missouri Department of Natural Resources' document "Groundwater Monitoring Parameters for Sanitary Landfills." The sample collection and analysis will be provided by a qualified private laboratory.

4. RECORD KEEPING

All inspection reports, work orders, invoices, and test results generated by the post-closure care program will be kept on file by Westlake Landfill, Inc., or the successor firm hired to carry out the program.

C. COSTS

The annual post-closure care cost (1985 dollars) is estimated to be $105,600. This cost includes site inspections, final cover repair, seeding repair, leachate treatment and discharge to the sanitary sewer, leachate and groundwater monitoring, and record keeping.

A breakdown of the estimated costs is as follows:

Item	Cost
Site Inspection: Performed quarterly, requiring one person approximately 8 hours/day @ $25/hour.	
Labor	$ 800
Final Cover Repair: Assumes replacement of topsoil to a one-foot depth over 5% of site each year @ $2.00/cu. yd topsoil moved and placed.	
Labor	$ 2,400
Equipment	2,900
Seeding Repair: Assumes reseeding of 10% of site each year @ $1,250/acre.	
Labor	$ 3,000
Equipment	1,000
Materials	100
Leachate Pumping, Treatment and System Supervision (Including Aeration): At $0.05/kWh, $65/ton lime, and $25/hour labor.	
Energy	$17,800
Maintenance	2,400
Chemicals	20,400
Labor	13,000

Item	Cost
Leachate Disposal: Includes 200 gpm discharge to MSD sewer @ $0.26/100 cubic feet.	
Disposal Fee	$36,400
Leachate and Groundwater Monitoring: Includes monitoring program as discussed @ $200/day sampling cost, $545/sample for leachate analyses, and $735/ year/well for groundwater analyses.	
Labor	$ 800
Lab Fees	4,100
Record Keeping: Assumes 20 hours/year @ $25 per hour.	
Labor	$ 500
TOTAL	$105,600

D. ESCROW REQUIREMENTS

Annual escrow account contributions to provide a perpetual care fund were estimated assuming the following:

- Annual payments into fund over 20 years.
- Fund accrues interest at a constant dollar interest rate of 5 percent. (A constant dollar interst rate is a measure of the real time value of money neglecting inflation effects. However, in terms of actual cash flow, inflation of annual costs is accounted for by the difference between the actual interest rate and the constant dollar interest rate.)

- Annual constant dollar interest required during post-closure is $105,600.
- Required escrow fund = $105,600/.05 = $2,112,000 and
- Required annual contribution = $2,112,000 x .03024 (sinking fund factor, 20 yrs, 5%) = $63,900

Therefore, $64,000 per year will be placed in an escrow account for the first 20 years of the landfill life. At the end of the twenty-first year and every year end thereafter, 5 percent of the end-of-year escrow fund balance will be withdrawn to pay for post-closure care during that year. In order to maintain the perpetual care fund, this constant percentage will be withdrawn each year. If actual post-closure care costs during the year are greater than the fund withdrawal, the Owner will pay for the difference with other funds. Likewise, if actual costs are less than the withdrawal amount, the excess withdrawal funds will accrue to the Owner.

* * * * * *

3

MISSOURI DEPARTMENT OF NATURAL RESOURCES
WASTE MANAGEMENT PROGRAM
GROUNDWATER MONITORING PARAMETERS
FOR SANITARY LANDFILLS

Below are listed the parameters that samples are to be analyzed for during the quarterly and annual/background sampling. (Background sampling is to be performed prior to initiating operation of a new landfill or newly permitted areas where the monitoring points are located.) Annual sampling is to be conducted during the second quarter.

ANNUAL/BACKGROUND LIST	QUARTERLY LIST
pH	chloride
conductivity	COD
cobalt	iron
total dissolved solids	pH
chloride	conductivity
sulfate	total dissolved solids
fluoride	water level in the well - report depth from ground surface to the water, and the depth of water.
total hardness - calculated	
barium	
boron	
cadmium	
chromium	
copper	
color, odor — Observation Only	
calcium	
sodium	
COD	
ammonia as N	
nitrate and nitrite as N	
total phosphorus	
mercury	
iron	
arsenic	
lead	
selenium	
silver	
manganese	
zinc	
Water level in the well - report depth from ground surface to the water, and the depth of water.	
magnesium	

ALL METALS ARE DISSOLVED.

LAI 0202

Permit Conditions

West Lake Landfill, Inc.

The following conditions are an integral part of the permit. Compliance with these conditions shall, in part, determine compliance with the permit.

1. An environmental assessment of the entire landfill site shall be initiated by West Lake Landfill Inc. or any successor or assign ("hereinafter West Lake") immediately after the issuance of this permit. This assessment, including hydrogeologic investigation, shall be completed by September, 1986 and shall be used as the basis for the development of a monitoring program and feasability study to assess necessary remedial action. The conclusions of the feasability study shall be submitted to MDNR within two years after the issuance of this permit. Implementation of necessary remedial action will be undertaken by West Lake in accordance with reasonable design and construction scheduling.

2. West Lake shall continue to cooperate with the appropriate federal agencies to satisfactorily resolve all issues connected with past disposal areas designated as confirmed "uncontrolled sites" pursuant to Section 260.435 R.S. MO.

3. This permit shall be issued for an initial period of fifteen years (the "Initial Period"). Twenty-four months prior to the expiration of the Initial Period, MDNR shall commence a review to determine if the operation of the landfill is in compliance with the approved design and performance criteria contained in the documents incorporated by reference into this permit. Such review and any recommendations resulting therefrom shall be provided to West Lake twelve months prior to the expiration of the Initial Period. If such recommendations are being implemented by West Lake prior to the expiration of such Initial Period, this permit shall be automatically renewed for consecutive five year terms (the "Renewal Term") upon the same conditions for review within twenty-four months of the expiration of the respective Renewal Term and receipt of recommendations resulting therefrom within twelve months of the expiration of said respective term. West Lake shall implement such recommendations in accordance with reasonable design and construction scheduling. Failure of West Lake to initiate implementation of such recommendations prior to expiration of the Initial Period or any Renewal Term shall result in automatic revocation of the permit at the expiration of the Initial Period or the respective Renewal Term.

4. West Lake as of the date of this permit shall assign day to day responsibility for the management of the landfill to an experienced landfill manager. The landfill manager shall be responsible for all on-site operations. The responsibility for day to day monitoring of waste arriving at the landfill shall be assigned to a landfill spotter. The procedures for waste disposal monitoring incorporated by reference into this permit shall be implemented by West Lake as of the date of the issuance of this permit. In addition, West Lake shall as of the date of the issuance of this permit hire a full time laborer for general landfill maintenance and grounds clean up.

5. West Lake shall execute the Post-Closure Plan incorporating annual escrow account contributions.

6. West Lake shall two times a year test the leachate and leachate treatment sludge for hazardous waste characteristics pursuant to 10 CSR 25-4. 010 (2 through 5) and submit the results of such tests within sixty days to MDNR. If hazardous wastes are detected in the leachate or sludge West Lake shall implement the Contingency Plan for the proper handling of such hazardous wastes.

6

STATUS

JOHN ASHCROFT
Governor

FREDERICK A. BRUNNER
Director

STATE OF MISSOURI
DEPARTMENT OF NATURAL RESOURCES

Division of Energy
Division of Environmental Quality
Division of Geology and Land Survey
Division of Management Services
Division of Parks, Recreation, and Historic Preservation

DIVISION OF ENVIRONMENTAL QUALITY
P.O. Box 176
Jefferson City, MO 65102

RECEIVED
NOV 29 1988

November 28, 1988

Mr. Mike Whitlock
Laidlaw Waste Systems
13570 St. Charles Rock Road
Bridgeton, MO 63044

Dear Mr. Whitlock:

RE: Change of Ownership, West Lake Sanitary Landfill, Operating Permit Number 118912, St. Louis County.

As we discussed on the phone on November 23, 1988, solid waste disposal area operating permits are not transferrable. The following outlines information which must be submitted to obtain a permit for a currently permitted landfill.

1. A completed "Application for Operating Permit" form (enclosed) must be submitted. This form must be signed by the "owner" and "operator" as defined in 10 CSR 80-2.010(26) and (27). Enclosed is a form for ordering the current Missouri Solid Waste Management Law and Rules.

2. Proof of purchase of the engineering plans and report for the design and operation of the facility must be submitted. These should be the same plans and report previously approved by the department.

3. Proof of purchase of the property, a copy of the lease agreement or other legal conveyance which stipulates that the applicant has legal access to the land during the life of the facility must be submitted.

4. If equipment is included in the sale, proof of the new ownership must be supplied, or documents that verify that the applicant has the necessary equipment, is leasing it, or has access to the equipment needed for the operation, must be submitted.

5. Written verification from the applicant must be submitted indicating the following:

   A. He understands the engineering plans, and the Missouri Solid Waste Management Law and Rules and will operate in accordance with them;

   B. He has copies of all previous correspondence from the department, including inspection reports and the existing permit and its conditions; and

C. He understands the existing permit conditions and is willing to accept them (this does not imply that the new permit, if issued, will have the same conditions or that additional constraints will not be placed on the operation).

6. Written notification from the previous operator that he has discontinued the operation of the facility must be submitted. It is possible that the past operator (permit holder) will agree to allow the applicant to operate the facility during the time period when the application is being reviewed. However, the past operator should be aware that he will still be held responsible for the operation until a new permit is issued.

   In this case, the notification may indicate that operation under the present permit will cease in six to nine months, allowing the department time to process the new application, or the notification can be submitted following issuance of a new permit.

7. Financial Responsibility

   Evidence of financial responsibility must be submitted with all disposal area applications. Acceptable ways of satisfying this requirement are outlined in 10 CSR 80-2.020(7), Missouri Solid Waste Management Rules. For disposal areas, the submittal of financial assurance instruments for closure and/or post-closure care is acceptable.

8. Fees

   As per section 260.205.2(5), RSMo, the applicant is required to pay an application fee of $2,000 and reimburse the department for all reasonable review costs up to an additional $8,000. The application fee is nonrefundable and must be submitted with the application.

9. Owner's Signature

   The actual landowner as indicated on the general warranty deed to the property must sign the application form. Verification that the appropriate person has signed as the owner is required.

10. Easement to DNR, and Notice Filed With County Recorder

    The following is required by the Missouri Solid Waste Management Law for all permits issued after August 12, 1986.

    A. DNR and the landowner shall execute an easement, as specified in section 260.205.7, RSMo, before the beginning of disposal operations; and

B. The landowner shall submit evidence that he has recorded with the county recorder a notice and covenant, as specified in section 260.205.7, RSMo, before the beginning of disposal operations.

A standard form for both A and B is enclosed.

11. The names and addresses of all record owners of contiguous real property or real property located within one thousand feet of the proposed disposal area must be submitted. This will allow notification of said landowners as required by 260.205.7, RSMo.

12. Certified Solid Waste Technician

On or before January 1, 1989, all solid waste disposal areas and those solid waste processing facilities as designated by rule, shall be operated under the direction of a certified solid waste technician. The application must acknowledge this requirement.

13. Closure Plan

The approved plans for a solid waste disposal area must include a closure plan. The owner/operator of the disposal area must also have a financial assurance instrument to cover the cost of closure (260.226, RSMo).

14. Post-Closure Plan

The approved plans for sanitary landfills, and those other solid waste disposal areas as determined by the department, must include a post-closure plan. The owner/operator of the disposal area must also have a financial assurance instrument to cover the cost of post-closure (260.227, RSMo).

The information submitted is reviewed along with the department's file on the operation. This file includes the existing permit, inspection reports, monitoring results, and any enforcement actions taken against the operation.

If it is determined that the operation is not in compliance with its present permit (which includes the engineering plans and regulations, or is in the midst of an enforcement activity), approval of the new permit will be contingent upon the situation being resolved. In some cases the operation has not followed the engineering plans to such a degree that the plans become obsolete, necessitating the submittal of an entire new set of engineering plans. Any plans for the design or operation of the disposal area must be prepared or approved by a professional engineer registered in Missouri.

If the permit holder has violated his permit conditions and remedial action such as construction of gas or leachate control structures, submittal of revised operating plans, application of cover material, etc. is needed, the action must be completed by either the present operator or the applicant. The

applicant may choose to acknowledge the situation and assume the responsibility for completion of the work within a specified time frame prior to issuance of a permit.

Additionally, the Solid Waste Management Law requires that upon receipt of an application for a solid waste disposal area, the department must:

1. Notify the public of such receipt by legal notice published in a newspaper in the area of the proposed disposal area;

2. Notify, by certified mail, the governing body of the county or city in which the proposed disposal area is to be located; and

3. Hold a public hearing in the county in which the proposed disposal area is to be located.

The application must be submitted in triplicate. If you have any questions or require additional information, please contact me at (314) 751-3176.

Sincerely,

DIVISION OF ENVIRONMENTAL QUALITY

Thomas R. Gredell

Thomas R. Gredell, P.E.
Chief, Solid Waste Permits Unit
Waste Management Program

TRG:lh

Enclosure

4 13 01 — 12/73

DEPARTMENT OF NATURAL RESOURCES

Division of Environmental Quality
P.O. Box 1368
Jefferson City, Missouri 65101

APPLICATION FOR OPERATING PERMIT

Solid waste disposal area or solid waste processing facility: (check only one)

- ☐ Sanitary landfill
- ☐ Incinerator
- ☐ Compost plant
- ☐ Demolition landfill
- ☐ Transfer station
- ☐ Resource recovery plant
- ☐ Other (specify) _____

Name of Area or Facility _____

Location: City _____ County _____

_____ 1/4 _____ 1/4 _____ 1/4, Section _____ Township _____ Range _____

Brief description of area or facility for which application for permit is made: (such as size or capacity) _____

Check type of waste proposed to be accepted:

- ☐ Municipal solid waste
- ☐ Bulky waste
- ☐ Dead animals
- ☐ Incinerator residue
- ☐ Demolition and construction waste
- ☐ Brush and untreated wood waste
- ☐ Septic tank pumpings
- ☐ Wastewater treatment plant sludges
- ☐ Other sludges (specify) _____
- ☐ Liquids (specify) _____
- ☐ Industrial process waste (specify) _____
- ☐ Hazardous wastes (specify) _____
- ☐ Other waste (specify) _____

Registered engineer or consulting engineering firm submitting plans:

Name _____ Phone _____

Address _____

City _____ State _____ Zip Code _____

OPERATOR: (Person principally responsible for the operation.)

Name _____ Phone _____

Address _____

City _____ State _____ Zip Code _____

OWNER: (Legal owner of land or facility if different than operator.)

Name _____ Phone _____

Address _____

City _____ State _____ Zip Code _____

If granted this permit, we the undersigned, agree to abide by the rules, regulations, orders and decisions of the Missouri Department of Natural Resources. We understand that in the event of any false or fraudulent information in the application, plans and data, or of failure to operate the area or facility in a proper and legal manner, the permit may be revoked after due notice from the Missouri Department of Natural Resources. We understand the permit is not transferable.

_____ SIGNATURE OF OPERATOR _____ DATE

_____ SIGNATURE OF OWNER _____ DATE

ORDER FORM
Missouri Hazardous and Solid Waste Laws and Regulations

Please complete the following information:

Name: _____

Company: _____

Address: _____

_____

City: _____
(State) (Zip)

Phone Number: ( ) _____
Area Code

Please indicate the number of copies needed for each document:

Document	Price Per Copy		Number of Copies		Subtotal
1. Missouri Hazardous Waste Law	$1.00	x	_____	=	$ _____
2. Missouri Hazardous Waste Regulations	3.00	x	_____	=	_____
3. Missouri Solid Waste Law	1.00	x	_____	=	_____
4. Missouri Solid Waste Regulations	2.00	x	_____	=	_____
OR					
7. Complete Set of Laws and Regulations	$7.00	x	_____	=	_____
			TOTAL	=	$ _____

Payment must accompany order form. Checks should be made payable to the Missouri Department of Natural Resources. Return to:

Missouri Department of
Natural Resources
Waste Management Program
P.O. Box 176
Jefferson City, MO 65102

Please call the Waste Management Program at (314) 751-3176 if you need further assistance or information. No refunds are allowed. Please make sure your order is correct.

WMP: 4-29-88

JOHN ASHCROFT
Governor

FREDERICK A. BRUNNER
Director

RECEIVED
DEC 31 1988
Division of Energy
Division of Environmental Quality
Division of Geology and Land Survey
Division of Management Services
Division of Parks, Recreation, and Historic Preservation

STATE OF MISSOURI
DEPARTMENT OF NATURAL RESOURCES
DIVISION OF ENVIRONMENTAL QUALITY
P.O. Box 176
Jefferson City, MO 65102

2

December 29, 1988

Mr. Mike Whitlock
Laidlaw Waste Systems, Inc.
13570 St. Charles Rock Road
Bridgeton, MO 63044

Dear Mr. Whitlock:

RE: Special Waste Disposal, West Lake Sanitary Landfill, Operating Permit No. 118912.

This is in reply to your request received November 29, 1988 to dispose of a special waste generated by Western Wire Products Company. The waste is described as "zinc filter cake sludge." The disposal rate was estimated at seven (7) cubic yards every three (3) months.

West Lake Sanitary Landfill is approved to accept this waste. The department's review of your special waste disposal request did not investigate this waste's potential for being a regulated hazardous waste beyond that of a review of the data submitted by Western Wire Products Company. The data reviewed indicates that this waste is not regulated as a hazardous waste per 10 CSR 25-4.261. The approved method of disposal is codisposal with municipal wastes on the active fill face.

If at any time the handling of this special waste interferes with the normal operation of the landfill, West Lake Sanitary Landfill may discontinue disposing of the material without notifying this office. Also, the Waste Management Program reserves the right to withdraw this approval if the special waste is found to interfere with normal operations or is not handled properly.

LAI 0204

RECEIVED
DEC 31 1988

This approval is not to be construed as compliance with any existing local disposal requirements. If there are questions, I may be contacted at (314) 751-3176.

Sincerely,

DIVISION OF ENVIRONMENTAL QUALITY

Susanne L. Ranard

Susanne L. Ranard
Environmental Engineer
Waste Management Program

SLR:lh

cc: Mr. Gene B. Young, Western Wire Products Co.

JOHN ASHCROFT
Governor

G. TRACY MEHAN III
Director

2

Division of Energy
Division of Environmental Quality
Division of Geology and Land Survey
Division of Management Services
Division of Parks, Recreation,
and Historic Preservation

STATE OF MISSOURI
DEPARTMENT OF NATURAL RESOURCES

P.O. Box 176
Jefferson City, MO 65102

CERTIFIED MAIL - P711579541

May 10, 1989

Mr. William Canney
West Lake Quary
13570 St. Charles Rock Rd
Bridgeton, MO 63044

Dear Mr. Canney:

RE: Addendum to West Lake Sanitary Landfill, St. Louis County
Permit Number: 118912

The Missouri Department of Natural Resources (MDNR) - Waste Management Program (WMP) is updating your groundwater monitoring program effective upon receipt of this letter. This is condsidered an addendum to the West Lake Sanitary Landfill operating permit.

Changes have been made to the format of the monitoring report forms to make them more convenient for you and to enable the WMP to record and retrieve the data more efficiently. There will be two report forms: one for quarterly sampling and one for the annual sample (which is taken in lieu of the second quarter sample). Please find the two forms enclosed.

Two new parameters have been added to the annual sampling list. These are Total Organic Halogen (TOX) and Total Organic Carbon (TOC). These indicator parameters will detect the presence of a broad range of organic compounds.

The WMP has also updated the Technical Bulletin entitled "Collection & Analysis of Water Samples." Please direct that all samples be collected and analyzed in accordance with the new guidelines. A copy of the Technical Bulletin should be conveyed to the laboratory which conducts your sampling and analysis as soon as possible.

RECEIVED
MAY 16 1989

LAI 0205

Documents

The following document is attached hereon and made an official part of your permit:

> "Monitoring Program for the West Lake Sanitary Landfill," dated May 1, 1989, prepared by the Waste Management Program, Department of Natural Resources (with attachment entitled "Collection and Analysis of Water Samples, dated February, 1989).

Conditions

The following condition is an integral part of the permit. Compliance with this condition shall, in part, determine compliance with your permit.

> Failure to comply with any aspect of this program may be viewed as a violation of a condition of the solid waste disposal area permit.

Should you have any questions or comments, please contact Ms. Jan Neher of the DNR-WMP, P.O. Box 176, Jefferson City, MO 65102, or call (314) 751-3176.

Sincerely,

DIVISION OF ENVIRONMENTAL QUALITY

Nicholas A. Di Pasquale

Nicholas A. Di Pasquale, Director
Waste Management Program

NAD:jnt

Enclosure

cc: SLRO

JOHN ASHCROFT
Governor

G. TRACY MEHAN III
Director

STATE OF MISSOURI
DEPARTMENT OF NATURAL RESOURCES

P.O. Box 176
Jefferson City, MO 65102

Division of Energy
Division of Environmental Quality
Division of Geology and Land Survey
Division of Management Services
Division of Parks, Recreation, and Historic Preservation

November 21, 1989

Mr. Peter L. Huff
Regional Landfill Manager
Laidlaw Waste Systems, Inc.
2340 S. Arlington Heights Road
Suite 230
Arlington Heights, IL 60005

Dear Mr. Huff:

RE: West Lake Sanitary Landfill (Permit #118912) Request for Permit Modification, St. Louis County

The Waste Management Program (WMP) has reviewed your request for the extension of operating hours and the covering of the operating face on Saturdays only.

In regard to the first request, (modification of operating hours), the Missouri Solid Waste management Law and Rules do not specifically address appropriate hours of operation. This proposal is acceptable to the WMP provided that compliance with the requirement for application of daily cover as stated in 10 CSR 80-3.010(13) can be maintained. If operational difficulties traceable to the extension of operating hours develop, the WMP will require a shortening of the hours of operation.

The second request regarded covering the top deck and sides as the face progressed and covering the working face at the end of operations on Saturday. As per 10 CSR 80-3.010(13)(C)1., sanitary landfills operating 24 hours per day shall incorporate all solid waste into one or more cells, using natural soil or other suitable material approved by the WMP, at least every 24 hours. The WMP, therefore, cannot allow the working face to be left uncovered until the end of operations on Saturday.

If you have any questions, feel free to contact me at (314) 751-3176.

Sincerely,

DIVISION OF ENVIRONMENTAL QUALITY

Thomas R. Gredell

Thomas R. Gredell, P.E.
Chief, Solid Waste Permits Unit
Waste Management Program

TRG:jml

cc: Kansas City Regional Office
Mr. Dean Smart, Enforcement Section, WMP

LAI 02006

JOHN ASHCROFT
Governor

G. TRACY MEHAN III
Director

STATE OF MISSOURI
DEPARTMENT OF NATURAL RESOURCES

Division of Energy
Division of Environmental Quality
Division of Geology and Land Survey
Division of Management Services
Division of Parks, Recreation, and Historic Preservation

DIVISION OF ENVIRONMENTAL QUALITY
P.O. Box 176
Jefferson City, MO 65102

3.600 St. Louis County
West Lake Landfill
MO-0104612

WEST LAKE COMPANIES
RECEIVED
JAN 04 1990
PRESIDENT

December 26, 1989

Mr. E. E. Whitaker, President
West Lake Quarry and Material Co.
12976 St. Charles Rock Rd.
Bridgeton, Missouri 63044

Dear Mr. Whitaker:

This is to advise that Discharge Permit MO-0104612, issued November 22, 1985, for wastewater discharges from West Lake Landfill in St. Louis County, Missouri, has terminated by its own terms in accordance with Section (10)(B) of Missouri Clean Water Commission Regulation 10 CSR 20-6.010 (Construction and Operating Permits). The tributary waste load has been connected to trunk sewers operated by the Metropolitan St. Louis Sewer District and the discharge at this location permanently eliminated. The facility now treating the wastewater from this site is covered by permit MO-0004391. Your application for renewal of NPDES permit MO-0104612 received October 24, 1986 has also been closed. A new discharge of stormwater only from the West Lake Quarry is covered by permit MO-0108634.

Sincerely,

MISSOURI CLEAN WATER COMMISSION

Charles A. Stiefermann, P.E.
Director of Staff

CAS:BZ:vh

cc: EPA Permit Section
St. Louis Regional Office
St. Louis County Health Department
Metropolitan Sewer District

LAI 0207

1/9/90

Summary of Bridgeton Landfill Permits

Permit No.	Date	Acres	Comments
118912	11/18/85	52	Supercedes 118906 & 118909
218912	9/17/84	22	
118909	8/20/81	9	3 new & 6 previously filled acc
118908	8/27/80	6	
118906	1/22/79	13	
	5/23/78	3.5	Expansion of 118903
118903	1/27/76	25	Recommended approval 8/27/7
218903	1/27/76	27	Recommended approval 10/10/7 (Areas 1, 3, 5 & 6 only)

JAN 11 1990

2

DRAFT

April 19, 1990

89L46-5

Mr. Tom Gredell, P.E.
Chief, Solid Waste Permit Section
Waste Management Program
Missouri Department of Natural Resources
P. O. Box 176
Jefferson City, MO 65102

RECEIVED
APR 25 1990

Dear Mr. Gredell:

RE: Plan Modification
Laidlaw Landfill
Permit No. 118912
Project No. 84-075-1-001

On behalf of Laidlaw Waste Systems, Inc., we are submitting this plan modification to add an additional leachate collection sump at the above-referenced landfill. Three leachate collection sumps are currently approved for construction within the landfill. The addition of the fourth sump will increase the efficiency of the collection system by reducing leachate drainage distances.

Enclosed with this submittal is Drawing No. A-1 illustrating the location of the additional leachate collection sump designated as LCS-4. Note that the leachate drain adjacent to the sump has been redirected to direct flow towards LCS-4.

Modification to the approved design of the leachate collection sump and leachate drain is not being requested by this plan modification. This plan modification requests only approval to add an additional leachate collection sump at the location identified and to redirect the drain as shown.

LAI 0209

DRAFT

We would appreciate your prompt review of this request. If you have any questions, feel free to contact our office at any time.

Sincerely,

FOTH & VAN DYKE

Nick R. Sturzl, P.E.
Senior Project Manger

James J. McDonald, P.E.
Manager, Facilities Development

NRS/lb

Enclosures

cc: Scott Schreiber, Laidlaw Waste Systems (w/encl.)
Miles Stotts, Laidlaw Waste Systems (w/encl.)
Mike Whitlock, Laidlaw Waste Systems (w/encl.)
Tim Weyenberg, Foth & Van Dyke (w/o encl.)
Rod Bloese, Foth & Van Dyke (w/encl.)

6

3.600 St. Louis
Laidlaw Waste Systems (West Lake Demo Landfill)

JOHN ASHCROFT
Governor

G. TRACY MEHAN III
Director

STATE OF MISSOURI
DEPARTMENT OF NATURAL RESOURCES

Division of Energy
Division of Environmental Quality
Division of Geology and Land Survey
Division of Management Services
Divisionof Parks, Recreation, and Historic Preservation

DIVISION OF ENVIRONMENTAL QUALITY

St. Louis Regional Office
8460 Watson Road, Suite 217
St. Louis, MO 63119
314-849-1313

October 10, 1990

Mr. Michael D. Liebman
Foth & Van Dyke
2737 South Ridge Road
P. O. Box 19012
Green Bay, Wisconsin 54307-9012

Dear Mr. Liebman:

I have received the application and $75.00 filing fee for the discharge permit for Laidlaw Waste Systems (West Lake Demolition Landfill).

Recent legislation was passed that changed the fee amounts. I am returning check # 103493 ($75.00). Your client will be billed for the annual operating fee.

If I can be of assistance, please call.

Sincerely,

ST. LOUIS REGIONAL OFFICE

Tom Welton

Tom Welton
Environmental Engineer

TW:ps

Enclosure: 10 CSR 20-6.011, Check # 103493 ($75.00)

cc: WPCP
Randy J. Anderson

Printed on recycled paper.

LAI 0210

PUBLIC NOTICE

The St. Louis County Planning Commission will hold a Public Hearing at 8:00 o'clock on Monday evening, February 18, 1952, in the Jury Assembly Room, New Court House, Clayton, Missouri. The following petitions will be considered at that time:

Phil G. and Anna Deuser, and, Herbert W. and Elizabeth S. Ziercher, % Herbert W. Ziercher, Agent, #15 North Meramec, Clayton 5, Mo., requesting a change in zoning from "C" Single Family Residential District to "I" Business District for the purpose of erecting commercial establishments on a tract of land fronting 1875 feet more or less on the east line of Old Halls Ferry Road distant approximately 1300 feet south of Highway 66, said tract having a depth of 300 feet and containing 13 acres more or less.

Tom Pivac, Rte. #2, Robertson, Mo., % Lewis E. Buschard, Route 2, Box 349, Robertson, Mo., requesting a change in zoning from "C" Single Family Residential District to "H" Local Business District for the purpose of establishing a delicatessen store on a tract of land fronting 72 feet on the north side of St. Charles Rock Road distant approximately 5000 feet west of the west line of Lindbergh Blvd., said tract having a depth of 180 feet.

Sebastano & Pasquala Tomarchio, 2811 January Av., St. Louis, Mo. requesting a change in zoning from "B" Single Family Residential District to "I" Business District for the purpose of establishing a Goldfish Hatchery and Nursery Business on a 2.326 acre tract of land located on the north corner of St. Charles Rock Road and McKelvey Road.

L. E. Trump and V. R. Cruse, R.F.D. #3, Box 392, Florissant, Mo., requesting a change in zoning and/or a Special Permit, to operate a sanitary land fill on a tract of land located on the west line of Taussig Road between St. Charles Rock Road and U. S. Highway #40, said tract containing approximately 50 acres. (From "B" to "K" District)

John A. Hughes and Clyde E. Mosley, % Herbert W. Ziercher, #15 North Meramec Ave., Clayton 5, Mo., requesting a change in zoning from "B" Single Family Residential District to "J" Light Industrial District for use as industrial property on a tract of land fronting 3047.58 feet on the south line of Natural Bridge Road, distant approximately 900 feet west of the west line of Lindbergh Blvd., said tract having a depth of 600 feet.

Files and plans are available for public inspection at the offices of the St. Louis County Planning Commission, Court House, Clayton, Missouri, during the regular office hours.

ST. LOUIS COUNTY PLANNING COMMISSION

Joseph D. Murphy, Chairman

ATTEST:

M. Eugene Baughman

M. Eugene Baughman, Planning Director

Clayton 5, Mo., February 1, 1952

TWO COPIES REQUIRED

NO. _____

STATE OF MISSOURI)
) SS.
COUNTY OF ST. LOUIS,)

FEE $25.00

TO THE COUNTY COUNCIL OF THE COUNTY OF ST. LOUIS

STATE OF MISSOURI

PETITION FOR SPECIAL PERMIT C C . Z.

Now comes V. R. Cruse and L. E. Krump and state (s) and show (s) to the Council that they (he) (she) are (is) the owner (s) of a certain tract (s) of real estate located in the unincorporated portion of the County of Saint Louis, State of Missouri, which are (is) more particularly described as follows, to-wit:

A. (Description from Deed - may be attached if too long.)

Attached
This includes Descriptions from 2-Deeds of Rothwell Property, 1-Hunzinger Tipke and 1-Clara V. Slaughter

B. (Location sketch, drawn to scale of 100 feet or less to the inch, of property showing nearest street intersection, depth and width of property, and north point. Outline that portion for which special permit is desired. Sketch may be attached if too long.)

Attached.

II. Your petitioner (s) further state (s) that the property herein above described has been zoned as District "J" & "B" and is presently being used VACANT (OLD QUARRY)

That he is desirous of obtaining a Special Permit for QUARRY & a change in zoning for "K" industrial use and that the deed restrictions for the property do not prohibit the use which would be authorized by said special permit.

That the following factors justify the request:

Your petitioner (s) further state (s) that they (he) (she) can (cannot) comply with all the requirements of the St. Louis County Planning Commission.

WHEREFORE, your petitioner prays for an Order of this Council granting the Special Permit requested hereinabove.

PETITIONERS SIGNATURE L. E. Trump

ADDRESS

We hereby certify that we are, the owner of the hereinabove described property and that all information given herein is true and a statement of fact.

L. E. Trump

V. R. Cruse

__ hereby certify that _____, the duly appointed agent of the owners of the hereinabove described property and that all information given herein is true and a statement of fact.

Subscribed and sworn to before me this 25th day of March, 1952

Notary Public, St. Louis County, State of Missouri.

My Commission expires 5/14/54

(SEAL)

Notary Public.

NOTE: It is the responsibility of the petitioner to furnish plans of the proposed development to the Planning Commission at the time of the Public Hearing.

TWO COPIES REQUIRED

ST

CO

OCCUPANCY PERMIT

Office of Zoning Enforcement Officer of St. Louis County
Court House
Clayton 5, Mo.

Permit No. 49
Date April 29, 1952

THIS IS TO CERTIFY that permission was this day granted to

Owner of Property V. R. Cruse & L. E. Trump

Address R3 Box 392 Florissant Mo.

Agent for Owner Arnold [illegible]

Address 8015 Forsyth Clayton Mo.

to occupy a tract of land - lots 1, 2, 3 of Yosti Estate

~~as described in detail on Building Permit Application No.~~ _____ solely for the

purpose of operating a sanitary land fill

M. EUGENE BAUGHMAN, Zoning Enforcement Officer

[illegible], Deputy

NOTICE: Use of property for any purpose other than that authorized above constitutes a violation of the Zoning Order of St. Louis County. Violators will be prosecuted accordingly.

Permit No. 49

Fee $1.00

RECEIPT OF APPLICATION FEE FOR OCCUPANCY PERMIT

Office of Zoning Enforcement Officer of St. Louis County
Court House
Clayton 5, Mo.

[illegible], Deputy

I hereby certify that the structures erected under Building Permit No. 49 will be used solely for operating a sanitary land fill per Court Order dated April 23, 1952 purposes.

V. R. Cruse, Owner

[illegible], Agent

WARNING: This is a receipt for fee only and does not permit occupancy of structure until the Occupancy Permit is issued. Mail post card notice when structure is completed and ready for occupancy.

TWO COPIES REQUIRED

NO. _____

FEE $25.00

STATE OF MISSOURI)
) SS.
COUNTY OF ST. LOUIS,)

TO THE COUNTY COUNCIL OF THE COUNTY OF ST. LOUIS

STATE OF MISSOURI

PETITION FOR SPECIAL PERMIT & CHANGE IN ZONING

Now comes [illegible] and [illegible] and state (s) and show (s) to the Council that they ~~(he)~~ (she) are ~~(is)~~ the owners (s) of a certain tract (s) of real estate located in the unincorporated portion of the County of Saint Louis, State of Missouri, which are ~~(is)~~ more particularly described as follows; to-wit:

A. (Description from Deed - may be attached if too long.)

Description of Gravelman Property only -

B. (Location sketch, drawn to scale of 100 feet or less to the inch, of property showing nearest street intersection, depth and width of property, and north point. Outline that portion for which special permit is desired. Sketch may be attached if too long.)

Sketch. Attached in this file -

II. Your petitioner (s) further state (s) that the property herein above described has been zoned as District B S.F.R. and is presently being used Stone Quarry & Vacant.

That he is desirous of obtaining a Special Permit for Sanitary Land Fill & Change in Zoning and that the deed restrictions for the property do not prohibit the use which would be authorized by said special permit.

ARNOLD J. WILLMANN
ATTORNEY AT LAW
BERKLEY BUILDING 8015 FORSYTHE BLVD.
PHONE PARKVIEW 3160
CLAYTON 5, MISSOURI

May 2, 1952

Mr. V. R. Cruse
c/o Westlake Quarry
Route 3 - Box 392
Florissant, Missouri

Dear Mr. Cruse:

I am enclosing herein the following documents:

(1) Permit for sanitary land fill on a tract of land on Lots 1, 2 and 3 of Yosti Estate,

(2) Copy of report of St. Louis County Health Department pertaining to the operation of sanitary land fill, and

(3) Certified copy of order of County Council granting permit for sanitary land fill. This order was made by the St. Louis County Council on April 23, 1952.

I am also enclosing a bill for my services rendered in this matter.

Yours very truly,

Arnold J. Willmann

Arnold J. Willmann.

AJW:cm

Enclosures

LAI 0211

Power of Attorney

FIDELITY AND DEPOSIT COMPANY OF MARYLAND

HOME OFFICE, BALTIMORE, MD.

KNOW ALL MEN BY THESE PRESENTS: That the FIDELITY AND DEPOSIT COMPANY OF MARYLAND, a corporation of the State of Maryland, by C. M. PECOT, JR., Vice-President, and C. W. ROBBINS, Assistant Secretary, in pursuance of authority granted by Article VI, Section 2, of the By-Laws of said Company, which reads as follows:

"The Chairman of the Board, or the President, or any Executive Vice-President, or any of the Senior Vice-Presidents or Vice-Presidents specially authorized so to do by the Board of Directors or by the Executive Committee, shall have power, by and with the concurrence of the Secretary or any one of the Assistant Secretaries, to appoint Resident Vice-Presidents, Assistant Vice-Presidents and Attorneys-in-Fact as the business of the Company may require, or to authorize any person or persons to execute on behalf of the Company [illegible]

STATE OF MISSOURI }
CITY OF ST. LOUIS } SS:

On this 15TH day of July 1985, before me appeared Jessie McNary

to me personally known, who being by me duly sworn, did say that he is Attorney-in-Fact of the FIDELITY AND DEPOSIT COMPANY OF MARYLAND, a corporation organized under the laws of the State of Maryland, and that the seal affixed to the foregoing instrument is the corporate seal of said corporation; and that said instrument was signed and sealed on behalf of said corporation by authority of its Board of Directors and the said Attorney-in-Fact acknowledged said instrument to be the free act and deed of said corporation.

IN TESTIMONY WHEREOF, I have hereunto set my hand and notarial seal, the day and year first above written.

My term expires JAN 27 1989

Madeline Burns
Madeline Burns, Notary Public
State of Missouri, St. Louis County

BR(79)09—6M, 2-85 221561

SEAL

ATTEST:

FIDELITY AND DEPOSIT COMPANY OF MARYLAND

C W Robbins
Assistant Secretary

By C M Pecot
Vice-President

STATE OF MARYLAND }
CITY OF BALTIMORE } SS:

On this 3rd day of April, A.D. 1985, before the subscriber, a Notary Public of the State of Maryland, in and for the City of Baltimore, duly commissioned and qualified, came the above-named Vice-President and Assistant Secretary of the FIDELITY AND DEPOSIT COMPANY OF MARYLAND, to me personally known to be the individuals and officers described in and who executed the preceding instrument, and they each acknowledged the execution of the same, and being by me duly sworn, severally and each for himself deposeth and saith, that they are the said officers of the Company aforesaid, and that the seal affixed to the preceding instrument is the Corporate Seal of said Company, and that the said Corporate Seal and their signatures as such officers were duly affixed and subscribed to the said instrument by the authority and direction of the said Corporation.

IN TESTIMONY WHEREOF, I have hereunto set my hand and affixed by Official Seal, at the City of Baltimore, the day and year first above written.

CAROL J. FADER NOTARY PUBLIC BALTIMORE CITY, MD.

Carol J. Fader
Notary Public Commission Expires July 1, 1986

CERTIFICATE

I, the undersigned, Assistant Secretary of the FIDELITY AND DEPOSIT COMPANY OF MARYLAND, do hereby certify that the original Power of Attorney of which the foregoing is a full, true and correct copy, is in full force and effect on the date of this certificate; and I do further certify that the Vice-President who executed the said Power of Attorney was one of the additional Vice-Presidents specially authorized by the Board of Directors to appoint any Attorney-in-Fact as provided in Article VI, Section 2 of the By-Laws of the FIDELITY AND DEPOSIT COMPANY OF MARYLAND.

This Certificate may be signed by facsimile under and by authority of the following resolution of the Board of Directors of the FIDELITY AND DEPOSIT COMPANY OF MARYLAND at a meeting duly called and held on the 16th day of July, 1969.

RESOLVED: "That the facsimile or mechanically reproduced signature of any Assistant Secretary of the Company, whether made heretofore or hereafter, wherever appearing upon a certified copy of any power of attorney issued by the Company, shall be valid and binding upon the Company with the same force and effect as though manually affixed."

IN TESTIMONY WHEREOF, I have hereunto subscribed my name and affixed the corporate seal of the said Company, this 15th day of July, 1985

W C Bestrup
Assistant Secretary

LAI 0212

L1428a—Cif.—079

[illegible] FOR THE F&D WATERMARK

JOHN ASHCROFT
Governor

FREDERICK A. BRUNNER
Director

STATE OF MISSOURI
DEPARTMENT OF NATURAL RESOURCES

Division of Energy
Division of Environmental Quality
Division of Geology and Land Survey
Division of Management Services
Division of Parks and
Historic Preservation

OFFICE OF THE DIRECTOR
1915 Southridge Drive
P.O. Box 176
Jefferson City, Missouri 65102
Telephone 314-751-4422

CERTIFIED MAIL P196186810

November 18, 1985

Mr. William McCullough, President
West Lake Landfill, Inc.
13570 St. Charles Rock Road
Bridgeton, MO 63044

Dear Mr. McCullough:

RE: Solid Waste Disposal Area Operating Permit #118912.

An Application for Operating Permit has been filed with the Missouri Department of Natural Resources requesting a permit to operate a sanitary landfill designated in the application as the West Lake Landfill, Inc. Sanitary Landfill. The application was filed by West Lake Landfill, Inc. and submitted to the Department of Natural Resources for review and approval. The application includes engineering plans, and specifications, operating procedures and subsequent correspondence or amendments for the subject facility. The application has been prepared by Burns & McDonnell. The application has been reviewed for compliance with the Missouri Solid Waste Management Law (Section 260.200 to 260.245, RSMo, 1978) and the Missouri Solid Waste Management Rules and Regulations.

In accordance with Section 260.205, Paragraph 2, RSMo, 1978, the Missouri Department of Natural Resources hereby approves the application and issues Permit Number 118912 to West Lake Landfill, Inc. for the operation of a solid waste disposal area set forth in the application as the West Lake Landfill, Inc. Sanitary Landfill. This permit applies only to that tract of land of approximately 52 acres, as described by the engineering plans, specifications and operating procedures submitted to the department. This permit is issued for a period of ten (10) years. This permit expires at midnight on November 18, 1995, unless a complete application for a permit is submitted to the Waste Management Program at least 12 months before the expiration date. If an application for a permit is made prior to November 18, 1994, then this permit and its conditions remain in effect

LAI 0213

until the effective date of a new permit, or effective date of denial of the application for a new permit. The department shall review this permit approximately five (5) years after the date of issuance to determine the compliance status of the landfill and shall modify the permit as necessary to assure that the facility continues to comply with applicable requirements of the provisions of Sections 260.200 to 260.245 RSMo and the rules and regulations adopted thereunder.

The final approved engineering plans, specifications and operating procedures described below are attached hereon and made an official part of this permit:

1. The completed Application for Operating Permit form, dated September 25, 1984, designating West Lake Landfill, Inc. as both the owner and operator of the facility.

2. The engineering report entitled Permit Application and Engineering Report for West Lake Landfill, Inc. Sanitary Landfill Expansion Bridgeton, Missouri, 1985; prepared by Burns & McDonnell; received July 5, 1985.

3. The operations manual entitled West Lake Landfill, Inc. Sanitary Landfill Expansion Operations Manual, 1985; prepared by Burns & McDonnell; received July 5, 1985.

4. Plan Sheets entitled West Lake Landfill, Inc. Sanitary Landfill, Bridgeton, Missouri, 1984; prepared by Burns & McDonnell, including: drawing 1, revision 1; drawing 2, revision 1; and drawings 3 through 5 (no revisions).

5. Letter dated September 25, 1985, to Mr. Thomas R. Gredell, P.E. from Mr. Robert M. Robinson, P.E. (including attachments) providing additional details of the landfill design and operation.

6. Document entitled Part IV, Post Closure Plan; received October 3, 1985; replaces the section of the engineering report entitled Part IV, Post Closure Plan.

7. Letter dated October 1, 1985, to Mr. William McCullough from Mr. Robert M. Robinson, P.E. (including attachments), received October 3, 1985, providing details of the Hazardous Waste Contingency Plan and the Waste Disposal Monitoring Plan.

8. Letter dated March 14, 1985, to Mr. Thomas R. Gredell, P.E. from Mr. Robert M. Robinson, P.E. providing additional details of the landfill design and operation.

9. Report entitled Spring Grouting Summary, West Lake Landfill, Inc. Bridgeton, Missouri, received April 30, 1985; prepared by Drilling Service Company; dated February 15, 1985, through April 18, 1985.

10. Report entitled Spring Grouting Summary, Grout Curtain #2, West Lake Landfill, Inc. Bridgeton, Missouri, received October 3, 1985; prepared by Drilling Service Company; dated May 23, 1985, through August 2, 1985.

11. Letter dated July 5, 1985, to Mr. John D. Doyle, P.E. from Mr. Robert M. Robinson, P.E. providing additional information concerning the grouting reports.

12. Report entitled Hydrogeologic Investigation, West Lake Landfill, Preliminary Phase Report, January, 1985; prepared by Burns & McDonnell; received March 18, 1985.

13. Report entitled Interim Report on the Proposed Groundwater Sampling Program for the Primary Phase of the Hydrogeologic Investigation, West Lake Landfill, St. Louis County, Missouri, October 1985; received October 8, 1985.

Approval of the application and issuance of this permit is given with the explicit understanding that the sanitary landfill will be developed and operated in compliance with the approved plans, specifications and operating procedures, with the conditions of the permit, with the Missouri Solid Waste Rules and Regulations, and in accordance with the Missouri Solid Waste Management Law. This permit is not to be construed as compliance with any existing local ordinances or zoning requirements. This permit for operation of a solid waste disposal area is issued only to the person named in the application and shall not be transferable.

Conditions

The following conditions are an integral part of the permit. Compliance with these conditions shall, in part, determine compliance with the permit.

1. This permit, Solid Waste Disposal Area Operating Permit #118912, encompasses the proposed expansion area and additional solid waste fill by West Lake Landfill, Inc. over the disposal areas permitted under Solid Waste Disposal Area Operating Permit Numbers 118906 and 118909 issued to West Lake Landfill, Inc. This document supersedes and replaces the previous permits and permit documents.

2. West Lake Landfill, Inc. shall establish and maintain an escrow fund for the purpose of providing post-closure care and maintenance of the landfill. The amount and manner of maintaining this fund shall be as described in the approved permit documents.

A. Fifty percent of the first yearly cost of this fund shall be deposited in this fund prior to acceptance of solid waste.

B. The existence and maintenance of this fund shall be verified to the department by the permittee prior to acceptance of solid waste. The maintenance of this fund shall be verified to the department annually prior to the anniversary date of establishment of the fund, in writing, by the financial institution wherein this fund is deposited.

3. An environmental assessment of the entire landfill site shall be initiated by West Lake Landfill, Inc. or any successor or assign ("hereinafter West Lake") immediately after the issuance of this permit. This assessment, including hydrogeologic investigation, shall be completed by November, 1986, and shall be used as the basis for the development of a monitoring program and feasibility study to assess necessary remedial action. The conclusions of the feasibility study shall be submitted to the department within two years after the issuance of this permit. Implementation of necessary remedial action will be undertaken by West Lake in accordance with reasonable design and construction scheduling. Additional groundwater monitoring requirements will be required, based on review of the hydrogeologic investigation and feasibility study.

4. Initial training of the waste inspector (spotter) shall be provided so that he/she is able to adequately perform the duties as described in the permit documents. At a minimum, the initial training for this employee shall include:

A. Familiarization with 10 CSR 80-3.010(3), solid waste excluded.

B. Identification and recognition of unacceptable wastes, as described in 10 CSR 80-3.010(3).

C. Familiarization with the necessary procedures to obtain approval of special waste disposal requests.

D. Provision of a list of all special wastes approved for disposal by the department.

5. Intermediate cover is not required until the fill is above the quarry rim, as proposed in the approved permit documents.

6. Leachate and sludge from leachate treatment shall be collected, treated and disposed of as per the approved permit documents.

A. Leachate shall be treated and disposed of in accordance with all applicable water quality laws, rules, regulations, and policies as enforced by the Water Pollution Control Program, Missouri Department of Natural Resources.

D. Additional sampling points may be added to the monitoring program depending on the results of the hydrogeologic investigation (See Condition #4).

8. The following previously approved special wastes are approved for disposal under permit #118912:

A. Fly ash derived from a coal burning industrial boiler, generated by McDonnell Douglas Corporation; 400 tons per month; approved November 1, 1984.

B. Incinerator ash derived from municipal refuse incineration, generated by McDonnell Douglas Corporation; 800 cubic yards per month; approved November 1, 1984.

A special waste disposal request will have to be submitted to, and approved by, the Waste Management program prior to accepting any other special waste as per 10 CSR 80-3.010(3).

9. Each eight inch lift of the twelve foot wide pad in the northeast corner should be tested for soil density to confirm that a minimum compaction of 90% of the standard proctor density is obtained.

10. All surface water discharges shall be made in accordance with all applicable water quality laws, rules, regulations and policies as enforced by the Water Pollution Control Program, Missouri Department of Natural Resources.

11. Methane gas shall be vented or burned in accordance with all applicable air quality laws, rules, regulations, and policies as enforced by the appropriate air pollution control regulatory agency.

12. Department review and approval of any planned final use is required prior to implementing a designated, commercial, final use of the site.

13. Within six months of the date of issuance of the permit, two copies of a final, comprehensive engineering report shall be submitted to the Waste Management Program. This report shall incorporate all present design and operating information into one reference manual detailing the final approved plans and specifications for the design and operation of the proposed sanitary landfill. This report shall incorporate all information required by regulation, eliminate all contradictory information, and include all revisions and additions to the original application for operating permit, as approved.

Facility Description

The proposed sanitary landfill is located in U.S. Survey 131, Township 46 North, Range 5 East, St. Louis County, Missouri. The proposed site consists of a total of approximately 214 acres of which approximately

52 acres will be utilized for the sanitary landfill. The types of wastes to be accepted will consist of municipal solid waste, bulky waste, dead animals, demolition and construction waste, and brush and untreated wood waste. Approval to dispose of special wastes other than the wastes listed above (except hazardous wastes, explosives, or radioactive material) will be considered on a case-by-case basis, as provided in 10 CSR 80-3.010(3). The area method of sanitary landfill operation will be utilized. The fill heights and area locations are to be completed as shown on the approved engineering plans and specifications and maintenance of the area shall be provided in accordance with the post-closure maintenance plan. Upon completion of the landfill, it will be used for as yet undesignated commercial operations.

All fencing, gates, equipment, maintenance buildings, all-weather access roads, signs, surface-water control devices, operating equipment, standby equipment and other necessary appurtenances shall be provided as per the final approved plans, specifications and operating procedures. The plans, specifications and operating procedures described above have been examined as to sanitary features of design which might affect the operation of the solid waste disposal area as a sanitary landfill.

Modification and Termination of Permit

The department reserves the right to revoke or modify this permit after due notice:

1. If it is found that the holder of the permit is in violation of the Missouri Solid Waste Management Law, or the Missouri Solid Waste Management Rules and Regulations;

2. For failure to operate in accordance with the approved plans, specifications and operating procedures;

3. For creating a public nuisance, health hazard or causing environmental pollution;

4. For failure to comply with any and all conditions of the permit, as described herein;

5. If it is found that additional construction or alteration of the solid waste disposal area is necessary to comply with any and all rules and regulations promulgated in accordance with the Missouri Solid Waste Management Law;

6. If it is determined a facility has not been operated for a period of one year.

This permit shall become void after notice to the department by the person named in the permit that said person has discontinued operation of the disposal area.

Upon initiation of operation at your landfill, you will have indicated your acknowledgement and acceptance of this permit and conditions of the permit. If you have any questions, please contact the Waste Management Program at (314) 751-3241 or P. O. Box 176, Jefferson City, MO 65102.

Sincerely,

DEPARTMENT OF NATURAL RESOURCES

Frederick A. Brunner, Ph.D., P.E.
Director

FAB:mpl

cc: East-West Gateway Regional Planning Commission
Mr. Robert M. Robinson, P.E.

Power of Attorney

FIDELITY AND DEPOSIT COMPANY OF MARYLAND

HOME OFFICE: BALTIMORE, MD.

KNOW ALL MEN BY THESE PRESENTS: That the FIDELITY AND DEPOSIT COMPANY OF MARYLAND, a corporation of the State of Maryland, by C. M. PECOT, JR. , Vice-President, and C. W. ROBBINS , Assistant Secretary, in pursuance of authority granted by Article VI, Section 2, of the By-Laws of said Company, which reads as follows:

SEC. 2. The President, or any Executive Vice-President, or any of the Senior Vice-Presidents or Vice-Presidents specially authorized so to do by the Board of Directors or by the Executive Committee, shall have power, by and with the concurrence of the Secretary or any one of the Assistant Secretaries, to appoint Resident Vice-Presidents, Assistant Vice-Presidents and Attorneys-in-Fact as the business of the Company may require, or to authorize any person or persons to execute on behalf of the Company any bonds, undertakings, recognizances, stipulations, policies, contracts, agreements, deeds, and releases and assignments of judgments, decrees, mortgages and instruments in the nature of mortgages, and also all other instruments and documents which the business of the Company may require, and to affix the seal of the Company thereto.

STATE OF MISSOURI }
CITY OF ST. LOUIS } ss:

On this 11th day of October 19 84, before me appeared Jessie McNary

to me personally known, who being by me duly sworn, did say that he is Attorney-in-Fact of the FIDELITY AND DEPOSIT COMPANY OF MARYLAND, a corporation organized under the laws of the State of Maryland, and that the seal affixed to the foregoing instrument is the corporate seal of said corporation; and that said instrument was signed and sealed on behalf of said corporation by authority of its Board of Directors and the said Attorney-in-Fact acknowledged said instrument to be the free act and deed of said corporation.

IN TESTIMONY WHEREOF, I have hereunto set my hand and notarial seal, the day and year first above written.

My term expires NOV 23 1987

Elizabeth Gremling

Elizabeth Gremling, Notary Public
State of Missouri, St. Louis County

BR (79)09—4M, 1-84 218974

SEAL

C W Robbins
Assistant Secretary

By C M Pecot
Vice-President

STATE OF MARYLAND }
CITY OF BALTIMORE } ss:

On this 27th day of July , A.D. 19 81 , before the subscriber, a Notary Public of the State of Maryland, in and for the City of Baltimore, duly commissioned and qualified, came the above-named Vice-President and Assistant Secretary of the FIDELITY AND DEPOSIT COMPANY OF MARYLAND, to me personally known to be the individuals and officers described in and who executed the preceding instrument, and they each acknowledged the execution of the same, and being by me duly sworn, severally and each for himself deposeth and saith, that they are the said officers of the Company aforesaid, and that the seal affixed to the preceding instrument is the Corporate Seal of said Company, and that the said Corporate Seal and their signatures as such officers were duly affixed and subscribed to the said instrument by the authority and direction of the said Corporation.

IN TESTIMONY WHEREOF, I have hereunto set my hand and affixed my Official Seal, at the City of Baltimore, the day and year first above written.

Carol J. Fader

CAROL J. FADER NOTARY PUBLIC BALTIMORE CITY, MD.

Notary Public Commission Expires July 1, 1982

CERTIFICATE

I, the undersigned, Assistant Secretary of the FIDELITY AND DEPOSIT COMPANY OF MARYLAND, do hereby certify that the original Power of Attorney of which the foregoing is a full, true and correct copy, is in full force and effect on the date of this certificate; and I do further certify that the Vice-President who executed the said Power of Attorney was one of the additional Vice-Presidents specially authorized by the Board of Directors to appoint any Attorney-in-Fact as provided in Article VI, Section 2 of the By-Laws of the FIDELITY AND DEPOSIT COMPANY OF MARYLAND.

This Certificate may be signed by facsimile under and by authority of the following resolution of the Board of Directors of the FIDELITY AND DEPOSIT COMPANY OF MARYLAND at a meeting duly called and held on the 16th day of July, 1969.

RESOLVED: "That the facsimile or mechanically reproduced signature of any Assistant Secretary of the Company, whether made heretofore or hereafter, wherever appearing upon a certified copy of any power of attorney issued by the Company, shall be valid and binding upon the Company with the same force and effect as though manually affixed."

IN TESTIMONY WHEREOF, I have hereunto subscribed my name and affixed the corporate seal of the said Company, this 11th day of October, 19 84

Assistant Secretary

L1428Ctf.— 079

FOR YOUR PROTECTION LOOK FOR THE F&D WATERMARK

1980 LAT

Area Code (314) 739-1122

WEST LAKE LANDFILL, INC.

13570 St. Charles Rock Road
BRIDGETON, MO. 63044

December 26, 1985

City of Bridgeton
11955 Natural Bridge Road
Bridgeton, Missouri 63044

Attention: Bryan Pearl

Gentlemen:

Please find enclosed, our company check # 639 in the amount of two hundred ($200.00) dollars for our Special Landfill License.

Very truly yours,

WEST LAKE LANDFILL, INC.

W.E. Whitaker
President

WEW:lg
encl

Pd on 1-11-89 mike

LAI 0215

ST. LOUIS COUNTY
DEPARTMENT OF COMMUNITY HEALTH
&
MEDICAL CARE
801 So. Brentwood Boulevard
Clayton, Missouri 63105
726-1100

AIR POLLUTION CONTROL
APPLICATION NO. 006626

Office Use Only

Date Rec'd.

Fee Rec'd.

APPROVED BY

Date

Operating Permit No.

APPLICATION FOR OPERATING PERMIT

Indicate Serial Number(s) of Construction Permit (or Application) for the Stack/Vent to which the Application refers: 009416

Owner Name: West Lake Landfill, Inc.
Owner Address: 13570 St. Charles Rock Rd. Bridgeton, MO. 63044

Installation Name: West Lake Landfill
Installation Address: 13570 St . Charles Road Bridgeton, Mo. 63044

Applicant Name: William E. Whitaker
Title: President

Applicant Address: 13570 St. Charles Road Bridgeton, Mo. 63044

Owners Stack/Vent Identification (Symbol or Number) Hot Oil Burner By-Pass Flare

Identify all pollutants (particulates, sulfur dioxide, etc.) and quantities emitted (pounds or tons per year, etc.) and the basis for this prediction (stack test, sulfur content of fuel, calculations, etc.).

Pollutant	Emission Rate	Basis
SO_2	.73 Lbs/Day*	Calculated Based on 12 ppm H_2S and 250 CFM Landfill Gas Flow. 100% Conversion of H_2S to SO_2 with Flare Assumed.

*Emission rate is part of, not in addition to, the max. emission rate estimated for the existing landfill gas control flare; Ref. West Lake Landfill, Inc. Construction Permit Application No. 009412 and Operating Permit Application No. 006627. For description of anticipated operation of the flares Ref. Supplemental Report "West Lake Quarry and West Lake Landfill, Inc. Air Pollution Control" filed with the applications.

Date 6/6/86 Fee enclosed in amount of $ 25.00

Applicants Signature Telephone No. (314) 739-1122

Prepared by: Burns & McDonnell Eng. Co. P. O. Box 173, Kansas City, MO. 64141

APC-4-1/78 White-Original/Canary-Applicants Copy

ST. LOUIS COUNTY
DEPARTMENT OF COMMUNITY HEALTH
&
MEDICAL CARE
801 So. Brentwood Boulevard
Clayton, Missouri 63105
726-1100

AIR POLLUTION CONTROL
APPLICATION NO. 006627
Office Use Only

Date Rec'd.

Fee Rec'd.

APPROVED BY

Date

Operating Permit No.

APPLICATION FOR OPERATING PERMIT

Indicate Serial Number(s) of Construction Permit (or Application) for the Stack/Vent to which the Application refers: 009412

Owner Name: West Lake Landfill, Inc.
Owner Address: 13570 St. Charles Rock Road Bridgeton, MO. 63044

Installation Name: West Lake Landfill
Installation Address: 13570 St. Charles Rock Rd. Bridgeton, MO. 63044

Applicant Name: William E. Whitaker
Title: President

Applicant Address: 13570 St. Charles Rock Rd. Bridgeton, MO. 63044

Owners Stack/Vent Identification (Symbol or Number) (Existing) Landfill Gas Control Flare

Identify all pollutants (particulates, sulfur dioxide, etc.) and quantities emitted (pounds or tons per year, etc.) and the basis for this prediction (stack test, sulfur content of fuel, calculations, etc.).

Pollutant	Emission Rate	Basis
SO_2	2.92 Lbs/Day*	Calculated based on 12 ppm H_2S and a maximum 1,000 CFM landfill gas flow.
		100% conversion of H_2S to SO_2 with flare assumed.

*Emission rate includes the .73 lbs/Day SO_2 reported for the hot oil burner by-pass flare; Ref. West Lake Landfill, Inc. Construction Permit Application No. 009411 and Operating Permit Application No. 006626, for description of anticipated operation of the flares Ref. Supplemental Report "West Lake Quarry and West Lake Landfill, Inc. Air Pollution Control" filed with the applications.

Date 6/6/86 Fee enclosed in amount of $ 25.00

Applicants Signature Telephone No. (314) 739-1122

Prepared by: Burns & McDonnell Eng. Co., P.O. Box 173, Kansas City, MO. 64141

APC-4-1/78 White-Original/Canary-Applicants Copy

№ 3306

ST. LOUIS COUNTY, MISSOURI

DEPARTMENT OF
COMMUNITY HEALTH AND MEDICAL CARE

Permit No. 3306 Date June 22, 1987

Name W. E. Whitaker, Pres. West Lake Landfill, Inc.

Address and Location 12976 St. Charles Rock Rd., Bridgeton

is hereby granted permission to operate a sanitary landfill

expires 6-22-88

under and in accordance with Ordinance No. 13320, Chapter 607 of St. Louis County and subject to the rules and regulations of the Department of Community Health and Medical Care.

Issued at Clayton, MO 63105

this 22nd day of June 19 87

Signed Colin B Roden
ASSOCIATE DIRECTOR

Kenneth Baldwin
DIRECTOR

This permit is issued subject to conditions in the Application and is valid until suspended or revoked by DEPARTMENT OF COMMUNITY HEALTH AND MEDICAL CARE. It is not transferable and must be kept posted in a conspicuous place on the premises for which it was issued.

4

Bill Conney

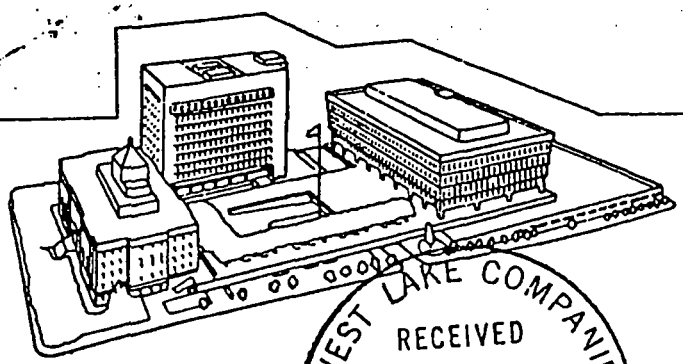

WEST LAKE COMPANIES
RECEIVED
JUN 24 1986
PRESIDENT

ST. LOUIS COUNTY, MISSOURI
GENE McNARY, COUNTY EXECUTIVE

DEPARTMENT OF COMMUNITY
HEALTH AND MEDICAL CARE

EVERARD O. RUTLEDGE, M.H.A.
DIRECTOR

Division of Environmental Health Care Services
Air Pollution Control Branch

June 23, 1986

West Lake Landfill, Inc.
13570 St. Charles Rock Road
Bridgeton, MO 63044

Dear Sir:

The enclosed Operating Permit number 5454 is issued under the provisions of the St. Louis County Air Pollution Control Code.

This permit does not relieve the grantee from any other requirement for obtaining an authority to operate which may be necessary under other codes or statutes.

Transfer -- A permit to operate shall not be transferable, whether by operation of law or otherwise, either from one location to another, from one piece of equipment to another, or from one person to another.

Any purported or attempted transfer of any permit to a person not named therein as a permittee or any purported or attempted transfer of a permit from one location to another or from one piece of equipment to another automatically revokes the permit.

Suspension or Revocation of Permits -- The Director may suspend or revoke a permit to operate for willful or continued violation of this Code.

Suspension or revocation of a permit to operate shall become final ten (10) days after service of notice, exclusive of the day of service, on the holder thereof.

Surrender of Permits -- An operating permit which has been revoked or suspended pursuant to the Code shall be surrendered forthwith to the Division.

Blaine J. Rhoades
Assistant Director
(for Air Pollution Control)

AP 6/6-78

LAI 0216

801 S. BRENTWOOD BOULEVARD, CLAYTON, MISSOURI 63105 / (314) 726-1100

ST. LOUIS COUNTY
DEPARTMENT OF COMMUNITY HEALTH & MEDICAL CARE
DIVISION OF ENVIRONMENTAL HEALTH CARE SERVICES
AIR POLLUTION CONTROL BRANCH

June 23, 1986
Date

05454
Number

O P E R A T I N G P E R M I T

This permit to operate the equipment/process(es) described below is granted to:

West Landfill, Inc.
Name

13570 St. Charles Rock Rd.
Location of Equipment

Such operation to be pursuant to the conditions set out in Operating Permit Application No.: 6627

Equipment/Process(es)

Landfill Gas Control Flare

1000 CFM exhaust

95%+ efficiency

Stack/Vent Identification

Blaine J. Rhoades
Assistant Director
Air Pollution Control Branch

(This Permit to be visibly affixed or placed in accordance with Section 612.120 St. Louis County Air Pollution Control Code.) Ten Dollar ($10.00) fee paid.

ST. LOUIS COUNTY, MISSOURI
GENE McNARY, COUNTY EXECUTIVE

DEPARTMENT OF COMMUNITY
HEALTH AND MEDICAL CARE

EVERARD O. RUTLEDGE, F.A.C.H.A.
DIRECTOR

DIVISIONS:
ST. LOUIS COUNTY HEALTH DEPARTMENT
ST. LOUIS COUNTY AMBULANCE SERVICE
ST. LOUIS COUNTY MEDICAL EXAMINER
ST. LOUIS COUNTY HOSPITAL

Division of Environmental Health Care Services
Air, Land and Water Branch

CONSTRUCTION PERMIT

Permit Number 001495

Date June 23, 1986

West Lake Landfill, Inc.
13570 St. Charles Rd.
Bridgeton, MO 63044

This Construction Permit is granted in response to your Application No. 9412 , for construction of:

Landfill Gas Control Flare
1000 CFM exhaust
95%+ efficiency

to be located at:
13570 St. Charles Rock Rd.
St. Louis County, MO 63044

Approved plans are enclosed.

Payment is acknowledged of fee $50.00

This permit does not relieve the grantee from any other requirement for obtaining an authority to construct which may be necessary under other codes or statutes.

Upon completion of this construction, notification is to be given this Section and a final inspection will be made.

Very truly yours,

Blaine J. Rhoades

Blaine J. Rhoades, Program Manager
Air Pollution Control Section

801 S. BRENTWOOD BOULEVARD, CLAYTON, MISSOURI 63105 / (314) 854-6000

ST. LOUIS COUNTY, MISSOURI
GENE McNARY, COUNTY EXECUTIVE

DEPARTMENT OF COMMUNITY
HEALTH AND MEDICAL CARE

EVERARD O. RUTLEDGE, F.A.C.H.A.
DIRECTOR

DIVISIONS:
ST. LOUIS COUNTY HEALTH DEPARTMENT
ST. LOUIS COUNTY AMBULANCE SERVICE
ST. LOUIS COUNTY MEDICAL EXAMINER
ST. LOUIS COUNTY HOSPITAL

Division of Environmental Health Care Services
Air, Land and Water Branch

CONSTRUCTION PERMIT

Permit Number 001496

Date June 23, 1986

West Lake Landfill, Inc.
13570 St. Charles Rock Road
Bridgeton, MO 63044

This Construction Permit is granted in response to your Application No. 9416 , for construction of:

Landfill Gas By-Pass Flare
250 CFM exhaust
95+% efficiency

to be located at:
13570 St. Charles Rock Rd.
St. Louis County, MO 63044

Approved plans are enclosed.

Payment is acknowledged of fee $50.00

This permit does not relieve the grantee from any other requirement for obtaining an authority to construct which may be necessary under other codes or statutes.

Upon completion of this construction, notification is to be given this Section and a final inspection will be made.

Very truly yours,

Blaine J. Rhoades

Blaine J. Rhoades, Program Manager
Air Pollution Control Section

801 S. BRENTWOOD BOULEVARD, CLAYTON, MISSOURI 63105 / (314) 854-6000

ST. LOUIS COUNTY, MISSOURI
GENE McNARY, COUNTY EXECUTIVE

DEPARTMENT OF COMMUNITY
HEALTH AND MEDICAL CARE
KENNETH BALDWIN
ACTING DIRECTOR

DIVISIONS:
ST. LOUIS COUNTY HOSPITAL
ST. LOUIS COUNTY HEALTH DEPARTMENT
ST. LOUIS COUNTY MEDICAL EXAMINER
ST. LOUIS COUNTY EMERGENCY MEDICAL SERVICES

June 25, 1986

WEST LAKE COMPANIES
RECEIVED
JUN 27 1986
PRESIDENT

Mr. William E. Whitaker, President
West Lake Landfill, Inc.
13570 St. Charles Rock Road
Bridgeton, MO 63044

Dear Mr. Whitaker:

After reviewing the analysis of the gas being emitted by the existing landfill at 13570 St. Charles Rock Road, the St. Louis County Air Pollution Control Branch has determined that its use as an alternate fuel for the asphaltic concrete plant located at the same address is acceptable.

A permit for a by-pass flare to combust the landfill gas when the asphalt plant is not operating has been issued.

If I can be additional assistance, feel free to contact me.

Very truly yours,

Blaine J. Rhoades

Blaine J. Rhoades
Program Manager
Air, Land and Water Branch

BJR/TWF/eh

LAI 0217

801 S. BRENTWOOD BOULEVARD, CLAYTON, MISSOURI 63105 / (314) 854-6000

№ 3307

ST. LOUIS COUNTY, MISSOURI

DEPARTMENT OF
COMMUNITY HEALTH AND MEDICAL CARE

Permit No. 3307 Date June 22, 1987

Name W. E. Whitaker, Pres. West Lake Landfill, Inc.

Address and Location 12976 St. Charles Rock Rd, Bridgeton

is hereby granted permission to operate a demolition landfill

expires 6-22-88

under and in accordance with Ordinance No. 13320, Chapter 607 of St. Louis County and subject to the rules and regulations of the Department of Community Health and Medical Care.

Issued at Clayton, MO 63105

this 22nd day of June 19 87

Signed John B Roden
ASSOCIATE DIRECTOR

Kenneth Baldwin
DIRECTOR

This permit is issued subject to conditions in the Application and is valid until suspended or revoked by DEPARTMENT OF COMMUNITY HEALTH AND MEDICAL CARE. It is not transferable and must be kept posted in a conspicuous place on the premises for which it was issued.

LAI 0218

ST. LOUIS COUNTY, MISSOURI
GENE McNARY, COUNTY EXECUTIVE

DEPARTMENT OF COMMUNITY
HEALTH AND MEDICAL CARE

KENNETH BALDWIN
ACTING DIRECTOR

DIVISIONS:
ST. LOUIS COUNTY HOSPITAL
ST. LOUIS COUNTY HEALTH DEPARTMENT
ST. LOUIS COUNTY MEDICAL EXAMINER
ST. LOUIS COUNTY EMERGENCY MEDICAL SERVICES

MEMORANDUM

TO: Leon A. Golfin, Administrative Chief
Waste Management Section

FROM: Ron Darling, Environmental Control Inspector Ron Darling
Waste Management Section

SUBJECT: Sanitary Landfill Operating Bond -
Policy for Permitting

DATE: October 7, 1987

As per St. Louis County Ordinance 607.690, the operating bond "shall be in the amount of ten thousand dollars ($10,000) per acre of landfill estimated in the waste facility plan to contain the working face during the next year". Implementation of this requirement in the current (1987) permitting sequence for sanitary landfills has raised some questions and concern. As interpretation of this regulation, it is recommended the following procedure be followed:

1. The basis for estimating the working face acreage will be the maximum acreage at any point of time in the permitting year which does not yet have final or intermediate cover plus any acreage reserved and designated for wet weather tipping.

2. Description and calculations to the nearest whole acre units of this working face acreage will be the responsibility of the applicant for approval by Waste Management Section.

3. Verification of this acreage may be required at any time.

4. Any positive discrepancies from actual acreage measurements less projected/bonded acreage can be included as augmented bonded acreage in one acre units in a subsequent permitting cycle.

Additional policy procedures will need to be developed for demolition landfills, transfer stations and processing plants.

RD:CW

LAI 0219

801 S. BRENTWOOD BOULEVARD, CLAYTON, MISSOURI 63105 / (314) 854-6000

SANITARY LANDFILL, DEMOLITION LANDFILL, WASTE PROCESSING
FACILITY OR TRANSFER STATION

2

To: St. Louis County Department of
Community Health and Medical Care
Waste Management Section
801 South Brentwood Boulevard
St. Louis, Missouri 63105

I ~~(We)~~ W. E. Whitaker the undersigned, apply for a renewal of permit to operate a sanitary landfill, demolition landfill, waste processing facility or transfer station, in St. Louis County, Missouri, as provided in Chapter 607.550-607.560.

Owner: West Lake Landfill, Inc.

Company: West Lake Landfill, Inc.

Address: 12976 St. Charles Rock Road, Bridgeton, Mo.

Date: November 11, 1987 Zip 63044

(1) Any changes in the waste facility Plan which must be made to reflect actual usage or conditions.

A copy of the waste facility plan including engineering drawings, operation manual, etc. are enclosed. A revised plan for the design of the "Chimney drains" has been submitted to the MDNR, as shown on the engineering plans.

(2) Total waste received at the facility during the previous 12 months.

Total sanitary - 968,000 yds.^{3} period of Oct. 1986 thru Sept. 1987.

(3) Water quality sampling results, if any.

Enclosed are the quarterly and annual water analysis reports for the (3) ground water monitoring wells (1201), (1202) and 1203 as required by MDNR, from the 3rd quarter of 1986 through the 3rd quarter of 1987.

(4) The quantity of leachate and/or methane treated.

Leachate - discharged to the MSD sewer system from June 1986 to June 1987 = 26,996 c.c.f.

(5) The price schedule in effect and the price schedule anticipated for the succeeding yea

Sanitary - $4.55/yd.^{3}

LAI 0220

waste.

NONE

(7) Equipment replaced or changed or anticipated to be replaced or changed since last permitting.

NONE

(8) A report indicating the infrastructures which have been put in place since last permitting. (3) Leachate collection riser columns installed in the new landfill area.
(3) Methane collection riser columns installed in new landfill area.
(3) Gas monitoring wells installed in the N.E. perimeter of the landfill.
(2) Additional methane wells drilled and tied into the gas flare.
(4) Aerators installed in leachate holding lagoon.

(9) If the facility is still under construction, whether the construction is proceeding according to the schedule shown in the waste facility Plan.

Sanitary landfill proceeding with infrastructures per plans as volume of business necessitates.

(10) Attach copy of Closure and post-closure bond in accordance with Chapter 607.700-607.710.
Not required until Jan. 1, 1988, will be forwarded when submitted to the Missouri Dept. of Natural Resources.

(11) Operating Bond requirements in accordance with Section 607.690 for landfills.
How many acres of active face area will you use in the next 12 months _____.
For landfills, please attach copy of bond for $10,000 per acre.
A - Active face area in the next 12 months = (2)
B - West Lake Landfill, Inc. will comply with the required bonding per acre.

(12) State provisions made for Insurance requirements in accordance with Section 607.680.

See attached certificates of insurance.

(13) Provide required statement of any Plan Modification as per Section 602.620, 607.690 (operating bond), 607.700 (closure bond), and 607.710 (post-closure bond).

No plan modfication is anticipated for the year of June 1987 to June 1988.

Certificate of Insurance

8

THIS CERTIFICATE IS ISSUED AS A MATTER OF INFORMATION ONLY AND CONFERS NO RIGHTS UPON YOU THE CERTIFICATE HOLDER. THIS CERTIFICATE IS NOT AN INSURANCE POLICY AND DOES NOT AMEND, EXTEND, OR ALTER THE COVERAGE AFFORDED BY THE POLICIES LISTED BELOW.

LIBERTY MUTUAL

LIBERTY MUTUAL INSURANCE COMPANY • LIBERTY MUTUAL FIRE INSURANCE COMPANY
LIBERTY INSURANCE CORPORATION • BOSTON, MA

This is to Certify that

West Lake Quarry & Material Co.
13570 St. Charles Rock Road
Bridgeton, MO 63044

Name and address of Insured.

is, at the issue date of this certificate, insured by the Company under the policy(ies) listed below. *The insurance afforded by the listed policy(ies) is subject to all their terms, exclusions and conditions and is not altered by any requirement, term or condition of any contract or other document with respect to which this certificate may be issued.

TYPE OF POLICY	CERT. EXP. DATE	POLICY NUMBER	LIMITS OF LIABILITY	
WORKERS' COMPENSATION	11/4/88	WC1-141-032371-017	COVERAGE AFFORDED UNDER W.C. LAW OF THE FOLLOWING STATES: MO	COV. B Bodily Injury By Accident 100,000 Ea. Acc. Bodily Injury By Disease 100,000 Ea. Pers. Bodily Injury By Disease 500,000 Pol. Lim.
☐ CLAIMS MADE RETRO DATE ☐ OCCURRENCE			General Aggregate - Other than Products/Completed Operations Products/Completed Operations Aggregate Bodily Injury and Property Damage Liability per occurrence Personal and Advertising Injury per pers. organization Other	
SPECIAL/EXCL. ENDORSEMENTS				
☐ OWNED ☐ NON-OWNED ☐ HIRED			$ EACH ACCIDENT-SINGLE LIMIT-B.I. AND P.D. COMBIN. $ EACH PERSON $ EACH ACCIDENT OR OCCURRENCE $ EACH ACCIDENT OR OCCURRENCE	

LOCATION(S) OF OPERATIONS & JOB # (If Applicable)

DESCRIPTION OF OPERATIONS:

*NOTE: You will NOT be notified annually of the continuation of this coverage. You will be notified if this coverage is terminated or reduced.

NOTICE OF CANCELLATION: THE COMPANY WILL NOT TERMINATE OR REDUCE THE INSURANCE AFFORDED UNDER THE ABOVE POLICIES UNLESS _____ DAYS NOTICE OF SUCH TERMINATION OR REDUCTION HAS BEEN MAILED TO:

CERTIFICATE HOLDER → St. Louis County

[signature]
AUTHORIZED REPRESENTATIVE

11/13/87 ss St. Lou
DATE ISSUED OFFICE

LAI 0221

CERTIFICATE OF INSURANCE

ISSUE DATE (MM/DD/YY) 11/13/87

PRODUCER

P.I.A. INSURANCE & CONSULTIN GROUP
7750 CLAYTON RD.
SUITE 106
ST. LOUIS, MO 63117

THIS CERTIFICATE IS ISSUED AS A MATTER OF INFORMATION ONLY AND CONFERS NO RIGHTS UPON THE CERTIFICATE HOLDER. THIS CERTIFICATE DOES NOT AMEND, EXTEND OR ALTER THE COVERAGE AFFORDED BY THE POLICIES BELOW.

INSURED

WESTLAKE QUARRY & MATERIALS
12976 ST. CHARLES ROCK RD.
BRIDGETON, MO 63044

COMPANIES AFFORDING COVERAGE

COMPANY LETTER A	CONTINENTAL CASUALTY
COMPANY LETTER B	TRANSCONTINENTAL INS. CO.
COMPANY LETTER C	
COMPANY LETTER D	
COMPANY LETTER E	

COVERAGES

THIS IS TO CERTIFY THAT POLICIES OF INSURANCE LISTED BELOW HAVE BEEN ISSUED TO THE INSURED NAMED ABOVE FOR THE POLICY PERIOD INDICATED. NOTWITHSTANDING ANY REQUIREMENT, TERM OR CONDITION OF ANY CONTRACT OR OTHER DOCUMENT WITH RESPECT TO WHICH THIS CERTIFICATE MAY BE ISSUED OR MAY PERTAIN, THE INSURANCE AFFORDED BY THE POLICIES DESCRIBED HEREIN IS SUBJECT TO ALL THE TERMS, EXCLUSIONS, AND CONDITIONS OF SUCH POLICIES.

CO LTR	TYPE OF INSURANCE	POLICY NUMBER	POLICY EFFECTIVE DATE (MM/DD/YY)	POLICY EXPIRATION DATE (MM/DD/YY)	ALL LIMITS IN THOUSANDS
A	X GENERAL LIABILITY X COMMERCIAL GENERAL LIABILITY CLAIMS MADE / OCCURRENCE X OWNER'S & CONTRACTORS PROTECTIVE X X	9 00250256	3/15/87	3/15/88	GENERAL AGGREGATE $,000,0 PRODUCTS-COMP/OPS AGGREGATE $,000,0 PERSONAL & ADVERTISING INJURY $,000,0 EACH OCCURRENCE $,000,0 FIRE DAMAGE (ANY ONE FIRE) $,000,0 MEDICAL EXPENSE (ANY ONE PERSON) $,000,0
	AUTOMOBILE LIABILITY X ANY AUTO X ALL OWNED AUTOS SCHEDULED AUTOS X HIRED AUTOS X NON-OWNED AUTOS X GARAGE LIABILITY	500250258	3/15/87	3/15/88	CSL $ BODILY INJURY (PER PERSON) $ (combined) ONE MILLION BODILY INJURY (PER ACCIDENT) $ PROPERTY DAMAGE $
	EXCESS LIABILITY OTHER THAN UMBRELLA FORM				EACH OCCURRENCE $ AGGREGATE $
B	WORKERS' COMPENSATION AND EMPLOYERS' LIABILITY				STATUTORY $ (EACH ACCIDENT) $ (DISEASE-POLICY LIMIT) $ (DISEASE-EACH EMPLOYEE)
	OTHER				

DESCRIPTION OF OPERATIONS/LOCATIONS/VEHICLES/RESTRICTIONS/SPECIAL ITEMS

CERTIFICATE HOLDER

ST. LOUIS COUNTY
GOVERNMENT BUILDING
7900 FORSYTH
CLAYTON, MO 63105

CANCELLATION

SHOULD ANY OF THE ABOVE DESCRIBED POLICIES BE CANCELLED BEFORE THE EXPIRATION DATE THEREOF, THE ISSUING COMPANY WILL ENDEAVOR TO MAIL DAYS WRITTEN NOTICE TO THE CERTIFICATE HOLDER NAMED TO THE LEFT, BUT FAILURE TO MAIL SUCH NOTICE SHALL IMPOSE NO OBLIGATION OR LIABILITY OF ANY KIND UPON THE COMPANY, ITS AGENTS OR REPRESENTATIVES.

AUTHORIZED REPRESENTATIVE

WEST LAKE LANDFILL, INC.
13570 ST. CHARLES ROCK RD. 314 739-1122
BRIDGETON, MO 63044

1574

12 0204110681 12-21-87 200006230 NOV 23 1987

4-3/810

PAY TO THE ORDER OF St Louis County Dept of Comm. Health + Medical Care $ 3000.00

DOLLARS

THE BOATMEN'S NATIONAL BANK OF ST. LOUIS
ST. LOUIS, MISSOURI

FOR

⑈001574⑈ ⑆081000032⑆ 040160321649⑈ ⑈0000300000⑈

WEST LAKE LANDFILL, INC.
13570 ST. CHARLES ROCK RD. 314 739-1122
BRIDGETON, MO 63044

1575

12 0204110681 12-21-87 200006227 NOV 23 1987

4-3/810

PAY TO THE ORDER OF St Louis County Dept of Comm Health + Medical Care $ 750.00

DOLLARS

THE BOATMEN'S NATIONAL BANK OF ST. LOUIS
ST. LOUIS, MISSOURI

FOR

⑈001575⑈ ⑆081000032⑆ 040160321649⑈ ⑈0000075000⑈

ST LOUIS COUNTY PLANNING COMMISSION
COURT HOUSE
CLAYTON 5, MISSOURI

NO. 179

RECEIPT FOR FEE FOR SPECIAL PERMIT
PETITION TO CHANGE ZONING [illegible] 19[illegible]

FEE $25.00

Petitioners name L. E. Trump

Address [illegible]

Petition for Change in zoning & Special Permit

Description of property:

M. Eugene Baughman, Executive Sec.

[illegible] Deputy

NOTICE: This is a receipt for fee only and does not constitute an approval of request.

SAID FEE CANNOT BE REFUNDED

No. 07669201 PREMIUM $ 50

JUDICIAL AND MISCELLANEOUS SURETY DEPARTMENT

The F&D Companies

FIDELITY AND DEPOSIT COMPANY OF MARYLAND
FIDELITY AND DEPOSIT COMPANY

HOME OFFICES: BALTIMORE, MD. 21203

Continuation Certification

FOR MISCELLANEOUS TERM BONDS

West Lake Landfill

as Principal, and the Fidelity and Deposit Company of Maryland, as Surety, in a certain Bond, No. 7669201, dated the 19th day of December 19 62, in the penalty of One Thousand and No/100---------- Dollars ($1000.00), in favor of City of Bridgeton, Missouri

, do hereby continue said bond in force for the further term of one year beginning on the 19th day of December 19 86

Licens and Permit Bond to Operate a Land Fill

PROVIDED, however, that said bond, as continued hereby, shall be subject to all its terms and conditions, except as herein modified, and that the liability of the said Fidelity and Deposit Company of Maryland under said bond and any and all continuations thereof shall in no event exceed in the aggregate the above named penalty, and that this certificate shall not be valid unless signed by said Principal.

Signed, sealed and dated this 24th day of September 19 86

Witness: West Lake Landfill

....(Seal)
Principal

....(Seal)
Principal

....(Seal)
Principal

☒ FIDELITY AND DEPOSIT COMPANY OF MARYLAND

☐ FIDELITY AND DEPOSIT COMPANY

..... By Jessie McNary
Jessie McNary, Attorney-in-Fact

J333 (ED 1/85)

ORIGINAL

No. 76 69 201 PREMIUM $30.00

JUDICIAL AND MISCELLANEOUS SURETY DEPARTMENT

Fidelity and Deposit Company

HOME OFFICE OF MARYLAND BALTIMORE, MD. 21203

Continuation Certification

FOR MISCELLANEOUS TERM BONDS

West Lake Landfill

as Principal, and the FIDELITY AND DEPOSIT COMPANY OF MARYLAND, as Surety, in a certain Bond, No. 76 69 201, dated the 19th day of December 19 62, in the penalty of One Thousand and No/100---------- Dollars ($1000.00), in favor of City of Bridgeton, Missouri

, do hereby continue said bond in force for the further term of one year beginning on the 19th day of December 19 84

License and Permit Bond to Operate a Land Fill

PROVIDED, however, that said bond, as continued hereby, shall be subject to all its terms and conditions, except as herein modified, and that the liability of the said FIDELITY AND DEPOSIT COMPANY OF MARYLAND under said bond and any and all continuations thereof shall in no event exceed in the aggregate the above named penalty, and that this certificate shall not be valid unless signed by said Principal.

Signed, sealed and dated this 11th day of October 19 84

Witness:

West Lake Landfill

(SEAL)
Principal

(SEAL)
Principal

(SEAL)
Principal

FIDELITY AND DEPOSIT COMPANY OF MARYLAND

By Jessie McNary

Jessie McNary, Attorney-in-Fact

No. 87 10 746 PREMIUM $ 30.00

JUDICIAL AND MISCELLANEOUS SURETY DEPARTMENT

Fidelity and Deposit Company

HOME OFFICE OF MARYLAND BALTIMORE, MD. 21203

Continuation Certification

FOR MISCELLANEOUS TERM BONDS

West Lake Landfill Inc

as Principal, and the FIDELITY AND DEPOSIT COMPANY OF MARYLAND, as Surety, in a certain Bond, No. 87 10 746, dated the 16th day of August 19 73, in the penalty of One Thousand and No/100---------- Dollars ($ 1000.00), in favor of County of St. Louis, Missouri

, do hereby continue said bond in force for the further term of one year beginning on the 16th day of August 19 85

License and/or Permit Bond for Landfilled

PROVIDED, however, that said bond, as continued hereby, shall be subject to all its terms and conditions, except as herein modified, and that the liability of the said FIDELITY AND DEPOSIT COMPANY OF MARYLAND under said bond and any and all continuations thereof shall in no event exceed in the aggregate the above named penalty, and that this certificate shall not be valid unless signed by said Principal.

Signed, sealed and dated this 15th day of July 19 85

Witness: West Lake Landfill Inc

(SEAL) Principal

(SEAL) Principal

(SEAL) Principal

FIDELITY AND DEPOSIT COMPANY OF MARYLAND

By Jessie McNary

Jessie McNary, Attorney-in-Fact

J335—

No. #08710746 PREMIUM $ 100.00

JUDICIAL AND MISCELLANEOUS SURETY DEPARTMENT

Fidelity and Deposit Company

HOME OFFICE OF MARYLAND BALTIMORE, MD. 21203

Continuation Certification

FOR MISCELLANEOUS TERM BONDS

West Lake Landfill, Inc

as Principal, and the FIDELITY AND DEPOSIT COMPANY OF MARYLAND, as Surety, in a certain Bond, No. #08710746, dated the 16th day of August 19 73, in the penalty of One Thousand and NO/100----------Dollars ($ 1000.00), in favor of County of St. Louis, Missouri, do hereby continue said bond in force for the further term of one year beginning on the 16th day of August 19 88

Licens and/or Permit Bond For Landfill

PROVIDED, however, that said bond, as continued hereby, shall be subject to all its terms and conditions, except as herein modified, and that the liability of the said FIDELITY AND DEPOSIT COMPANY OF MARYLAND under said bond and any and all continuations thereof shall in no event exceed in the aggregate the above named penalty, and that this certificate shall not be valid unless signed by said Principal.

Signed, sealed and dated this 6th day of July 19 88

Witness:

West Lake Landfill, Inc (SEAL)
Principal

(SEAL)
Principal

(SEAL)
Principal

FIDELITY AND DEPOSIT COMPANY OF MARYLAND

By Jessie McNary
Jessie McNary, Attorney-in-Fact

J333—

PAUL H. HIMEBAUGH
CONSULTING ENGINEER
9929 MANCHESTER ROAD
WARSON WOODS, MO. 63122

August 29, 1977

West Lake Landfill, Inc.
Route 1, Box 206
Bridgeton, Missouri 63042

Attn: Mr. William J. McCullough
Secretary - Treasurer

Gentlemen:

RE: Request for Permit for
Expansion of Landfill Operations
West Lake Landfill, Inc.
St. Louis County, Missouri

The following report has been prepared for your use in making application to Missouri Department of Natural Resources Division of Environmental Quality for permit to operate a sanitary landfill on a portion of the West Lake Quarry property.

The proposed site is located on the same property as the present landfill, but is a new and separate area from the existing operation.

The report sets out design concepts, operational requirements, and construction techniques for the new landfill area which must be followed to produce minimal impact upon the environment. If these procedures are followed, it is my opinion that you will protect public health, prevent nuisances, and meet applicable standards established by the Missouri Solid Waste Management Law of 1972 and the Missouri Solid Waste Rules and Regulations.

Very truly yours,

Paul H. Himebaugh

Paul H. Himebaugh PE
Missouri Registration No. E-6180

STATE OF MISSOURI
PAUL H.
HIMEBAUGH
NUMBER
E-6180
REGISTERED PROFESSIONAL ENGINEER

LAI 0222

ENGINEERING REPORT
for
PROPOSED EXPANSION
of
WEST LAKE LANDFILL

INTRODUCTION

The present landfill areas at West Lake Landfill, Inc. are approaching completion, and it is desired to extend or relocate operations into the quarry pit adjacent to St. Charles Rock Road at Taussig Road. Personnel and equipment of the present operation will be used, and present customers can be accomodated in the new area.

This report deals with specific conditions in the new area, and sets out all requirements which may be needed for protection of environmental quality. Procedures are outlined in sequential steps so that only essential work need be undertaken if it is found that the full treatment is not necessary. Each increment of the work is designed so that it may be self-sufficient and appropriate as a base for further steps without need for removal and replacement. It is hoped that this concept will unquestionably protect public health, but will accomplish the desired result at minimum expense to the consumer.

Primary areas of concern are drainage, infiltration, and leachate generation, collection, treatment and disposal. This statement should not be interpreted as indicating any lack of concern for other features, but they seem to present no significant problems.

ENGINEERING REPORT
for
PROPOSED EXPANSION
of
WEST LAKE LANDFILL

Table of Contents

SITE LOCATION	1
TERRAIN AND FLOOD PROBABILITY	2
GEOLOGY	3
HAUL ROAD CONSTRUCTION	4
IMPERVIOUS LINER	5
LEACHATE COLLECTOR	6
LEACHATE WET WELL	6
LEACHATE PUMP	7
LEACHATE PUMPHOUSE	7
LEACHATE DISPOSAL AND TREATMENT	8
LANDFILL CONSTRUCTION	10
SURFACE WATER MANAGEMENT	12
OPERATION	12
VECTOR CONTROL	13
GAS CONTROL	13
BEAUTIFICATION	13
DUST CONTROL	14
LITTER CONTROL	14
SAFETY	14

PLATE 1 LOCATION & AREA MAPS with FINAL CONTOURS

PLATE 2 MISCELLANEOUS DETAILS and EXISTING CONTOURS

PLATE 3 LEACHATE WELL DETAILS & PROPOSED CONTOURS

PLATE 4 CROSS SECTIONS

PLATE 5 CROSS SECTIONS

SITE LOCATION

The area proposed for extension of sanitary landfill operations is located in a portion of the West Lake Quarry in U.S. Survey 131 near the intersection of Mo. Highway 115 (St. Charles Rock Road) and Taussig Road in north-central St. Louis County, within the city limits of Bridgeton.

The area covers thirteen acres in a portion of the quarry where mining operations are nearly complete. The specific tract is rectangular, measuring approximately 600 feet by 1200 feet, located west of the intersection of St. Charles Rock Road and Taussig Road. The location and shape of the new area can be seen on the Location and Area Maps on Plate 1.

The quarry is located within the corporate limits of the City of Bridgeton, and is subject to the zoning ordinance of that City. The quarry site itself is zoned M-1, and some adjacent property is zoned M-2. The western part of the quarry property is zoned R-1, and there is some R-3 zoning slightly more than one quarter mile to the east. There is only one occupied residence in the neighborhood, and it is located at the southern corner of the intersection of St. Charles and Taussig Roads.

Primary access to the landfill site is from St. Charles Rock Road, which is a four-lane concrete highway. Alternate access can be obtained from Old St. Charles Rock Road at the southern boundary of the quarry.

West Lake Landfill has been operating since 1953 as a separate but inter-related activity of the West Lake Quarry and Material Company. The entire property, whether used for quarry or landfill operations, is either owned or controlled by long-term leases by several parties, individual and corporate, but all owners are inter-related as principals in the quarry and landfill operations.

At the present time there are no specific plans for the type of land use to be expected on the reclaimed land, but obviously the completed landfill will present a better appearance than an abandoned quarry.

TERRAIN AND FLOOD PROBABILITY

The quarry and landfill site is on the limestone bluff about two miles east of the Missouri River at the edge of the flood plain. The Kansas City District of the Corps of Engineers is restudying Missouri River profiles and does not have a precise estimate of 100-year design flood elevation at this time, but they advise that the profile is in the range of 451 to 454 just below the I-70 bridge. The intersection of the landfill and quarry entrance road with St. Charles Rock Road is at elevation 452, which is the lowest point on the site except for the pits. The lowest point on the pit perimeter is elevation 454.5 near the crusher, so there is protection against direct flood by the Missouri River.

GEOLOGY

During July of 1973 numerous borings were made over the entire property in regard to characteristics of overburden, and these borings were discussed in an Engineering Report of March 1974 by Rogers and Associates. That discussion concluded that groundwater and/or leachates from the present landfill flows westward to the Missouri River. Of the 1973 borings, only 1 to 3 and 25 & 26 are of interest in regard to the new area, and those boring logs are shown on Plate 2.

The existing quarry in solid Kimmswick limestone gives an opportunity to inspect the formation. It is dense and there is little indication of seepage. Last January when the weather was very cold, examination of the exposed faces showed very little ice, indicating a lack of moisture penetration. The proposed expansion area is adjacent to the existing deep pit and a wall 40 feet thick has been left in place to retain the landfill and leachates (if any). There was a crack in this wall, resulting from quarrying operations, which has been grouted to maintain the impermeability of the wall.

The strike of the formation is generally north, with a dip of about 1%. When rock removal is complete, the low point in the expansion area will be about elevation 310 where the pit is closest to Taussig and St. Charles Rock Roads.

Visual examination can not precisely determine the elevation of previous landfill areas along the northwest side of the new area, but it appears that the present ground line above elevation 450 may be previous landfill.

HAUL ROAD CONSTRUCTION

There is an existing haul road into the pit which rock trucks use to remove the rock, but this road is not entirely suitable for use by trash trucks. First, the access or haul road for trash trucks will be relocated away from concrete and quarry operations as shown on Plates 1 and 2. Alignment of the haul road will provide at lease 200' sight distance. The road will be at least 26' wide, with widening on sharp curves to 30'. A small vee ditch on each side on the road should handle drainage because of the heavy grade.

Maximum grade will be limited to 10%, which should be adequate since the trash trucks will not be loaded while making the ascent. The haul road will be cut in solid rock in some cases, but when necessary to construct over earth or previous landfill, it will be constructed with 12" waterbound macadam. It is believed that the haul road alignment shown on Plate 2 will be in dirt or rock, in which case back slopes may be 1 1/2:1. If it is found that the back slope is in previous landfill, the slope must be laid back on a 3:1 and final cover replaced. As an alternate, the landfill may be removed for a sufficient width to permit construction of an earth dike.

The minimum radius for the haul road will be 75' at the inside edge of the roadway. Where the haul road is adjacent to a vertical face, a protective berm 6' wide and 2' high should be constructed between the road and the vertical face.

To eliminate need for culverts under the haul road, there will be no grade reversals, and none seem necessary. All rainfall within the pit boundaries will follow the haul road ditches to the bottom of the pit, where it may cause a problem. Possibly 25% of the drainage could be trapped in a sump at elevation 390, then pumped out of the pit, but it will probably be better to use the leachate well to remove rainfall.

IMPERVIOUS LINER

Although the limestone appears dense and generally impervious, a protective clay liner will be provided. The entire pit floor will be covered with a 24" layer of compacted clay.

Vertical rock faces will also be lined with compacted clay. Although a three foot thickness would be satisfactory, there does not seem to be a practical method of placing it. First, the clay must be compacted, and it appears that at least 8' is required for the operation of trucks, blade, and roller. Tentatively, it is suggested that clay be delivered by truck and the clay bladed to a 6" depth. Operation of rubber-tired equipment (trucks) should then produce satisfactory compaction. After placement of the 8' thick wall, about 6' high, it may be possible to remove some of the clay and use it for daily cover in the landfill. An

alternate method could be a small tractor with blade and roller that might produce satisfactory results with a width of less than 8'.

It is anticipated that the leachate well will be used to keep the fluid level below elevation 350. The rock wall near the southern end of the new area is at elevation 363, and there is a clay berm to elevation 370. There is no need for the impervious liner to extend above elevation 400 because the leachate will break out at elevation 370 if unattended.

Therefore, the quantity of impervious liner has been estimated with vertical walls 8' thick from the bottom of pit to elevation 400. 61,000 cubic yards of clay will be required in accordance with the above criteria. Use of the alternate smaller tractor might reduce the volume of material, but not the cost.

LEACHATE COLLECTOR

As shown on Plate 3, 250 linear feet of underdrain will be used to collect leachate from the bottom of the pit. Underdrain material will be non-corrosive and the use of 4" perforated PVC underdrain is recommended. Underdrains will be bedded in granular filter material and the ends will be sealed.

LEACHATE WET WELL

Other leachate observation wells at the existing landfill have not shown the generation or collection of leachates. When the new area is completed and sealed, it is hoped that there will be no significant amount of leachates, but because of the drainage situation in the

pit there will be a need for pumping during construction if not after completion. As refuse placement progresses, sections of 42" RCP will be installed with 4" steel pipe well casing. A temporary cover should be kept over the open shaft. If pumping becomes necessary, the leachate pump can be installed temporarily and operated with temporary power.

LEACHATE PUMP

The volume of leachate to be pumped is unknown, but there is a relatively constant head requirement if the leachate is to be raised to the disposal area at elevation 470. Because leachate is suspected of corrosive potential, use of a stainless submersible pump is recommended. Impellers to be lexan or other non-corrosive material. One possible pump is Jacuzzi Model 1S4M-16 stage, which should deliver 600 gallons per hour. This pump may be obtained for either 110 volt or 230 volt power. If used temporarily, the power selection may be dependent on the size of portable power plants which may be available in the quarry.

Pump should be 4" with 1 1/2" steel drop pipe. Permanent installation will require about 180' of drop pipe and cable.

LEACHATE PUMPHOUSE

At this time it is not known if a permanent pump installation will be needed, but if it is, the pumphouse layout is shown on Plate 3. The pumphouse should be a light, pre-fabricated metal building with removable roof. Provision must be made for relative movement

between the top of the wet well and the ground surface of the landfill. A hose or flexible tube will be required between the wet well and the line to the disposal area, and the pump controls should be attached to the wet well instead of the pumphouse. Pumphouse should have insulation and provision for heating to avoid freezing the piping. Total movement of 20' or more must be anticipated eventually since the landfill is 175' deep at this point. The pumphouse may need to be reset, or perhaps the top sections of the wet well will need to be removed in time.

1 1/2" PVC pipe with SDR of 26 is recommended for the line to the disposal area. Because of movement in the fill, flexibility is needed, and the PVC should not be harmed by the leachate.

LEACHATE DISPOSAL AND TREATMENT

Tentative method of disposing of leachate is to irrigate the previous landfill area southwesterly of the new area. When pumping temporarily during construction, perhaps a small fire hose will suffice, depending on the volume of fluid to be pumped. Evaporation and transpiration may adequately dissapate the moisture. If the volume of liquid is too great to be handled by a temporary fire hose, six or eight lawn sprinklers may be installed as shown on Plate 3.

If irrigation with leachate after completion of the landfill proves to be detrimental to vegetation, or is noxious, a small lagoon will be built where the leachate may be evaporated, settled, or aerated.

Possibly a second, or larger lagoon will be required or desired to achieve a proper level of treatment. A small pump will be required to irrigate with the effluent when it is of satisfactory quality.

The foregoing discussion of possible handling of the leachate problem is an example of the sequential increments mentioned in the introduction to this report. Items which can not be reached for modification, such as the collector underdrains, are installed for possible use, if and as needed. Construction of the lagoon(s) is deferred until there is more experience with the specific problem at this site.

Lagoon details shown may need modification if the leachate is to be aerated. A working water depth of 2' was assumed, which may need to be increased, and possibly a sump will be required. Typical details, such as 3:1 slopes and 20 mil PVC liner with 12" of protective cover, should be applicable for whatever configuration is needed.

LANDFILL CONSTRUCTION

After preparation of the pit floor by installation of the impervious liner, including the vertical walls 6' high, landfill construction will start at the northeast end of the pit, next to St. Charles Rock Road. The southwest end should also be prepared for use in wet weather. Because the haul road is all-weather, there should be no difficulty in getting trucks in and out of the pit, but it would be desirable to minimize travel on the pit floor in wet weather.

Trucks will dump near the working face, and refuse will be bladed into the cell in lifts of 2 or 3 feet. The tractor will make several passes over the lift to obtain compaction. Daily cover will be hauled as needed, or it is advisable to haul a stock pile of cover material that will supply cover requirements for a week, and keep it near the working face.

As each lift of cells is completed, the process will be repeated, starting with construction of the vertical liner on rock faces and continuation of the 24" pad over the haul road that will be covered.

The cross sections show total volume in the landfill of 1,245,000 cubic yards. Final cover will require 42,000 cubic yards, and the impervious liner 61,000, leaving a net volume of 1,142,000 cubic yards for the mixture of refuse and daily cover.

Daily cover requires about 16% of the total refuse volume, which is 183,000 cubic yards for the calculated volumes. For daily cover, final cover, and impervious liner, a total of 286,000 cubic yards must be borrowed. There is an ample quantity available from the borrow area south of Old St. Charles Rock Road, which contains an excess of 100 acres owned by the company.

As the landfill approaches completion, the surface should be shaped to the contours shown on Plate 3. The maximum slope is 3:1, and the minimum slope on relatively flat areas is 2%. Ditches have been designed with a minimum slope of 3% in an effort to avoid potential ponding and infiltration if there should be excess settlement at any point.

Ditches across the landfill are to be riprapped. Riprap is a flexible form of paving that will adjust to minor settlement without undercutting. Flat ditches (3%) may be riprapped with 6" stone, but the steep ditch down the 3:1 slope must be riprapped with 12". Details shown on Plate 3 should be workable for dumped riprap with a minimum of hand work.

When any area is brought to final grade and final cover is applied, it will immediately be seeded. This is especially critical on the 3:1 slope which will wash into the quarry sump.

SURFACE WATER MANAGEMENT

During construction there are some unavoidable drainage problems which can be solved only by use of the leachate pump. However, when construction is completed and there is a good stand of grass to control erosion, drainage into the quarry should be essentially the same as it has been. Rain which falls into the quarry pit of the new landfill area will be diverted to some extent to St. Charles Rock Road. Approximately 85% of the rainfall will run over the slope and/or ditch at the wall. With good vegetation on the slope, the water should be slowed and sheet flow should occur. The ditch accumulates from the upper portion of the 12 Acre drainage area, and because of the high slope will deliver water to the quarry sump quickly.

On-site ditches are designed for 20-year storm frequency.

OPERATION

The present landfill will continue to operate until the expansion area is ready for use. The air curtain will be continued, as at present, for appropriate solid wastes, and the same signs will be maintained stating prohibited types of waste materials. The following will not be accepted at the landfill:

> Hazardous wastes, bulk liquids, semi-solids, sludges containing free moisture, highly flammable or volatile substances, unexpended pesticide containers, pesticides, raw animal manure, septic tank pumpings, raw sewage sludge, industrial process sludge, explosives, and radio-active materials.

Five employees are currently engaged in the landfill operation, and these same employees would be utilized on the proposed expansion area.

Two D-8 tractors are used for spreading and compacting solid waste, and there is a Lima 1250 dragline and two 35-T Euclid trucks for hauling daily cover.

When the expansion area is activated, the landfill office will be moved to a location appropriate for administration of the new area.

VECTOR CONTROL

Timely application of daily cover should eliminate harboring, feeding and breeding of vectors. In the event that vector control is needed, a program will be implemented. Past experience by the management of West Lake Landfill shows the use of Decon and Purina Fly Bait to be effective without undue hazard.

GAS CONTROL

Because of the dense, vertical, limestone faces of the quarry, horizontal migration of gases is very unlikely. Natural consolidation which will accompany generation of decomposition gases will probably cause the cover material to separate from the vertical face, thereby venting the gases. Periodically, and particularly 12 months after completion of the landfill, an inspection should be made for the presence of gases. If found in detrimental quantities, perforated vent pipes, or other suitable vents should be installed.

BEAUTIFICATION

Pending determination of the effects from irrigating with leachate, no beautification is planned immediately. The management of West Lake Landfill is in contact with horticulturists to find the most

suitable vegetation for this project. Tentative plans are to plant evergreens on either side of the entrance road and at the edge of the landfill along St. Charles Rock Road.

DUST CONTROL

The waterbound macadam roads will produce dust during dry weather. Use of a water wagon will be continued to control dust.

LITTER CONTROL

Temporary, portable litter fences will be used to control blowing papers during periods of high winds. Paper must be removed from the litter fence daily.

SAFETY

The landfill site (and quarry) is fenced, with absolute control of access.

A fire extinguisher is provided on each piece of equipment used at the landfill.

Telephone for emergency communication shall be available at landfill office. Standby telephone available at Quarry Office.

3

September 16, 1977

Mr. John D. Doyle, P.E.
Missouri Department Of Natural Resources
P.O. Box 1368
2010 Missouri Blvd.
Jefferson City, Missouri 65101

Dear Mr. Doyle:

We enclose herewith copy of application in duplicate.

Very truly yours,

WEST LAKE LANDFILL, INC.

Wm. J. McCullough,
Secretary - Treasurer

WJM:cs
enclosure

LAI 0223

E 15.01 — 12/75

DEPARTMENT OF NATURAL RESOURCES

Division of Environmental Quality
P.O. Box 1368
Jefferson City, Missouri 65101

APPLICATION FOR OPERATING PERMIT

Solid waste disposal area or solid waste processing facility: (check only one)

- [X] Sanitary landfill
- [ ] Incinerator
- [ ] Compost plant
- [ ] Demolition landfill
- [ ] Transfer station
- [ ] Resource recovery plant
- [ ] Other (specify) _____

Name of Area or Facility: West Lake Landfill, Inc.

Location: City: Bridgeton Missouri County: St. Louis

_____ 1/4 _____ 1/4 _____ 1/4, Section Surrey 131, Township 47, Range 5 E

Brief description of area or facility for which application for permit is made: (such as size or capacity) The area covers 13 acres in a portion of the quarry where mining will be completed. The area is approximately 600 ft. by 1200 ft. located west and south of intersection of St. Charles Road and Taussig Ave., Bridgeton, Missouri per Plat 1 engineers report.

Check type of waste proposed to be accepted:

- [ ] Municipal solid waste
- [ ] Bulky waste
- [ ] Dead animals
- [ ] Incinerator residue
- [ ] Demolition and construction waste
- [ ] Brush and untreated wood waste
- [ ] Septic tank pumpings
- [ ] Wastewater treatment plant sludges
- [ ] Other sludges (specify) _____
- [ ] Liquids (specify) _____
- [ ] Industrial process waste (specify) _____
- [ ] Hazardous wastes (specify) _____
- [X] Other waste (specify) industrial non-toxic solid waste

Registered engineer or consulting engineering firm submitting plans:

Name: Paul E. Himebaugh, PE No. 6180 Phone: 314-961-1150
Address: Suite 257 - 9929 Manchester Road
City: St. Louis State: Missouri Zip Code: 63122

OPERATOR: (Person principally responsible for the operation.)
Name: West Lake Landfill, Inc. Exec. Catherine Cruse, Pres., Wm. J. McCullough, V. Pres. Phone: 314-739-1122
Address: Rt. 1, Box 206
City: Bridgeton State: Missouri Zip Code: 63042

OWNER: (Legal owner of land or facility if different than operator.)
Name: Estate V.R. Cruse-Catherine Cruse & L.E. Trump, A Partnership Phone: 314-739-1122
Address: Rt. 1, Box 206
City: Bridgeton State: Missouri Zip Code: 63042

If granted this permit, we the undersigned, agree to abide by the rules, regulations, orders and decisions of the Missouri Department of Natural Resources. We understand that in the event of any false or fraudulent information in the application, plans and data, or of failure to operate the area or facility in a proper and legal manner, the permit may be revoked after due notice from the Missouri Department of Natural Resources. We understand the permit is not transferable.

PRESIDENT
SIGNATURE OF OPERATOR _____ DATE _____

PARTNER
SIGNATURE OF OWNER _____ DATE _____

E 15.01 — 12/75

DEPARTMENT OF NATURAL RESOURCES

Division of Environmental Quality
P.O. Box 1368
Jefferson City, Missouri 65101

APPLICATION FOR OPERATING PERMIT

Solid waste disposal area or solid waste processing facility: (check only one)

- [x] Sanitary landfill
- [ ] Incinerator
- [ ] Compost plant
- [ ] Demolition landfill
- [ ] Transfer station
- [ ] Resource recovery plant
- [ ] Other (specify) _____

Name of Area or Facility: West Lake Landfill, Inc

Location: City: Bridgeton Missouri County: St Louis

_____ 1/4 _____ 1/4 _____ 1/4, Section: Survey 131 Township: 47 Range: 5 E

Brief description of area or facility for which application for permit is made: (such as size or capacity) The area covers 13 acres in a portion of the quarry where mining will be completed. The area is approximately 600 ft by 1200 ft located west and south of intersection of St Charles Road and Taussig Ave - Bridgeton Missouri per plan engineers 14

Check type of waste proposed to be accepted:

- [x] Municipal solid waste
- [ ] Bulky waste
- [ ] Dead animals
- [ ] Incinerator residue
- [ ] Demolition and construction waste
- [ ] Brush and untreated wood waste
- [ ] Septic tank pumpings
- [ ] Wastewater treatment plant sludges
- [ ] Other sludges (specify) _____
- [ ] Liquids (specify) _____
- [ ] Industrial process waste (specify) _____
- [ ] Hazardous wastes (specify) _____
- [x] Other waste (specify) industrial non Toxic solid waste

Registered engineer or consulting engineering firm submitting plans:

Name: Paul E. Himebaugh PE No. 6186 Phone: 314-961-115
Address: Suite 257 - 9929 Manchester Road
City: St Louis State: Missouri Zip Code: 63122

OPERATOR: (Person principally responsible for the operation.)

Name: West Lake Landfill, Inc Catherine Cruse Pres. Wm J. McCullough C.V. Pres Phone: 314-739-1122
Address: Rt 1 Box 206
City: Bridgeton State: Missouri Zip Code: 63042

OWNER: (Legal owner of land or facility if different than operator.)

Name: Estate V. R Cruse - Catherine Cruse & L. E Trump - A Partnership Phone: 314-739-112
Address: Rt 1 Box 206
City: Bridgeton State: Mo Zip Code: 63042

If granted this permit, we the undersigned, agree to abide by the rules, regulations, orders and decisions of the Missouri Department of Natural Resources. We understand that in the event of any false or fraudulent information in the application, plans and data, or of failure to operate the area or facility in a proper and legal manner, the permit may be revoked after due notice from the Missouri Department of Natural Resources. We understand the permit is not transferable.

President
SIGNATURE OF OPERATOR _____ DATE _____

Partner
SIGNATURE OF OWNER _____ DATE _____

JOSEPH P. TEASDALE
GOVERNOR

CAROLYN ASHFORD
DIRECTOR

missouri department of natural resources

2010 Missouri Blvd.
P.O. Box 1368 Jefferson City, Missouri 65101 314-751-3241

September 12, 1977

Mr. William J. McCullough
West Lake Landfill, Inc.
Route 1, Box 206
Bridgeton, Missouri 63042

Dear Mr. McCullough:

Please be advised that on September 6, 1977, the Department of Natural Resources, Solid Waste Management Program received an Application for Operating Permit accompanied by engineering plans, specifications and operating procedures for the West Lake Landfill, Inc. Sanitary Landfill, prepared by Mr. Paul H. Himebaugh, P.E.

These plans, specifications and operating procedures will be reviewed as soon as possible. In general, approximately 30 to 45 days are required to review the plans and process the operating permit if the plans are in approvable form. If revisions or additional information are required, a letter of comments will be prepared and sent to your consulting engineer with a copy also being sent to you.

Enclosed are several blank Application for Operating Permit forms as requested by Mr. Himebaugh. A completed application form should be completed and submitted to this office in order to complete the necessary steps for an application for operating permit for a sanitary landfill.

If you have any questions, please advise.

Sincerely,

John D. Doyle

John D. Doyle, P.E.
Solid Waste Technical Services
Solid Waste Management Program

JDD:pdi

Enclosures

cc: Paul H. Himebaugh, P.E.
St. Louis Regional Office

LAI 0224

REITZ & JENS, INC.

CONSULTING ENGINEERS

1040 NORTH LINDBERGH

ST. LOUIS, MISSOURI 63132

(314) 993-4132

HENRY M. REITZ, PRESIDENT
STIFEL W. JENS, SENIOR VICE PRESIDENT
JOHN J. BAILEY, JR., VICE PRES., CHIEF ENG.
DAVID E. MURRAY, VICE PRESIDENT
DONALD S. ESKRIDGE, SECRETARY

SOIL MECHANICS-FOUNDATIONS
HYDROLOGY-HYDRAULICS
RESOURCE RECLAMATION
DRAINAGE-PAVEMENTS
LAND DEVELOPMENT
WATER RESOURCES
SOLID WASTE

May 15, 1981

Mr. Earl Holtgraewe
Mo. DNR, St. Louis Office
8460 Watson Rd.
St. Louis, MO 63119

Re: West Lake Landfill
Temporary Holding Lagoon

Dear Mr. Holtgraewe:

This is a followup of today's telephone conversation regarding status of the proposed temporary holding lagoon at West Lake Quarry.

Mr. Bryan Pearl, Bridgeton City Engineer, has indicated City approval for this temporary lagoon. A copy of his letter of approval will be sent to you as soon as it is received.

Enclosed for your information and file is a copy of a drawing showing the location of the temporary lagoon in the field alongside Old St. Charles Rock Rd.

We met with Bentonite representative at the West Lake Quarry office today and they will put their proposal in writing Monday. I requested they send a copy directly to you and Tom Dean at the same time in order to expedite your review.

If there are any questions, please call.

Very truly yours,

David E. Murray

DAVID E. MURRAY

Encl.
DEM/rs
cc: T. Dean
West Lake Quarry

LAI 0225

CITY OF
BRIDGETON

01-11-89 HO

DTH REV 200.00
CHECK 200.00

ITEM 1
1CL 5710 13:07TH

LAI 0226

2

Power of Attorney

FIDELITY AND DEPOSIT COMPANY OF MARYLAND

HOME OFFICE: BALTIMORE, MD.

KNOW ALL MEN BY THESE PRESENTS: That the FIDELITY AND DEPOSIT COMPANY OF MARYLAND, a corporation of the State of Maryland, by C. M. PECOT, JR., Vice-President, and C. W. ROBBINS, Assistant Secretary, in pursuance of authority granted by Article VI, Section 2, of the By-Laws of said Company, which reads as follows:

SEC. 2. The President, or any Executive Vice-President, or any of the Senior Vice-Presidents or Vice-Presidents specially authorized so to do by the Board of Directors or by the Executive Committee, shall have power, by and with the concurrence of the Secretary or any one of the Assistant Secretaries, to appoint Resident Vice-Presidents, Assistant Vice-Presidents and Attorneys-in-Fact as the business of the Company may require, or to authorize any person or persons to execute on behalf of the Company any bonds, undertakings, recognizances, stipulations, policies, contracts, agreements, deeds, and releases and assignments of judgments, decrees, mortgages and instruments in the nature of mortgages, and also all other instruments and documents which the business of the Company may require, and to affix the seal of the Company thereto.

does hereby nominate, constitute and appoint Madeline Burns, Jessie McNary, Mary Becker, Margie E. Phelps and Ronald E. Jordan, all of St. Louis, Missouri, EACH,

its true and lawful agent and Attorney-in-Fact, to make, execute, seal and deliver, for, and on its behalf as surety, and as its act and deed: any and all bonds and undertakings, each in a penalty not to exceed the sum of TWO HUNDRED FIFTY THOUSAND DOLLARS ($250,000).....

And the execution of such bonds or undertakings in pursuance of these presents, shall be as binding upon said Company, as fully and amply, to all intents and purposes, as if they had been duly executed and acknowledged by the regularly elected officers of the Company at its office in Baltimore, Md., in their own proper persons. This power of attorney revokes that issued on behalf of Madeline Burns, etal, dated, December 2, 1980.

The said Assistant Secretary does hereby certify that the aforegoing is a true copy of Article VI, Section 2, of the By-Laws of said Company, and is now in force.

IN WITNESS WHEREOF, the said Vice-President and Assistant Secretary have hereunto subscribed their names and affixed the Corporate Seal of the said FIDELITY AND DEPOSIT COMPANY OF MARYLAND, this 27th day of July, A.D. 1981

FIDELITY AND DEPOSIT COMPANY OF MARYLAND

ATTEST:

FIDELITY AND DEPOSIT COMPANY OF MARYLAND SEAL

C W Robbins
Assistant Secretary

By C M Pecot
Vice-President

STATE OF MARYLAND
CITY OF BALTIMORE } ss:

On this 27th day of July A.D. 19 81 before the subscriber a Notary Public of the State of

RECEIVED
OCT 12 1984
QUIGLEY-ZIMBALIST

LAI 0227

WEST LAKE

West Lake Landfill, Inc.
13570 St. Charles Rock Rd.
Bridgeton, MO 63044
(314) 739-1122

W.E. Whitaker
President

December 14, 1987

Mr. Leon Golfin
Administrative Chief
St. Louis County DOCHMC
Waste Management Section
801 South Brentwood Blvd.
St. Louis, MO 63105

Dear Mr. Golfin:

Enclosed are the application forms from West Lake Landfill, Inc. for the renewal of existing permits as required by Ordinance #13320 of the St. Louis County Waste Management Code for sanitary and demolition landfills.

The operating bond for both the sanitary and demolition landfills is currently being processed and will be sent to your attention within a few days.

If there are any questions please contact Bill Canney of our staff.

Very truly yours,

WEST LAKE LANDFILL, INC.

W. E. Whitaker
President

WEW:dp

LAI 0228

SANITARY LANDFILL, DEMOLITION LANDFILL, WASTE PROCESSING
FACILITY OR TRANSFER STATION

2

To: St. Louis County Department of
Community Health and Medical Care
Waste Management Section
801 South Brentwood Boulevard
St. Louis, Missouri 63105

I (~~We~~) W. E. Whitaker the undersigned, apply for a renewal of permit to operate a sanitary landfill, demolition landfill, waste processing facility or transfer station, in St. Louis County, Missouri, as provided in Chapter 607.550-607.560.

Owner: West Lake Landfill, Inc.

Company: West Lake Landfill, Inc.

Address: 12976 St. Charles Rock Road, Bridgeton, Mo.

Date: November 11, 1987 Zip 63044

(1) Any changes in the waste facility Plan which must be made to reflect actual usage or conditions.

A copy of the waste facility plan including engineering drawings, etc. are enclosed.

(2) Total waste received at the facility during the previous 12 months.

Approximately 169,000 cu. yds.

(3) Water quality sampling results, if any.

N/A

(4) The quantity of leachate and/or methane treated.

Not required

LAI 0229

(5) The price schedule in effect and the price schedule anticipated for the succeeding year.

Present Price Schedule - Demolition 5.60 cu./yd. Anticipated - Demolition 6.00 cu./yd.

(6) The amount, by volume, of materials salvaged or processed and usable materials from waste.

Sold as scrap metal - approximately 1,100 tons last year.

(7) Equipment replaced or changed or anticipated to be replaced or changed since last permitting.

None

(8) A report indicating the infrastructures which have been put in place since last permitting.

None

(9) If the facility is still under construction, whether the construction is proceeding according to the schedule shown in the waste facility Plan.

N/A

(10) Attach copy of Closure and post-closure bond in accordance with Chapter 607.700-607.710. Not required until Jan 1, 1988, will be forwarded when submitted to the Missouri Dept. of Natural Resources.

(11) Operating Bond requirements in accordance with Section 607.690 for landfills. How many acres of active face area will you use in the next 12 months (1). For landfills, please attach copy of bond for $10,000 per acre.

West Lake Landfill, Inc. will comply with the required bonding per acre.

(12) State provisions made for Insurance requirements in accordance with Section 607.680.

See Attached Certificates of Insurance.

(13) Provide required statement of any Plan Modification as per Section 602.620, 607.690 (operating bond), 607.700 (closure bond), and 607.710 (post-closure bond).

No plan modification is anticipated for the year of June 1987 through June 1988.

acord CERTIFICATE OF INSURANCE

ISSUE DATE (MM/DD/YY) 11/13/87 4

PRODUCER

P.I.A. INSURANCE & CONSULTIN GROUP
7750 CLAYTON RD.
SUITE 106
ST. LOUIS, MO 63117

THIS CERTIFICATE IS ISSUED AS A MATTER OF INFORMATION ONLY AND CONFERS NO RIGHTS UPON THE CERTIFICATE HOLDER. THIS CERTIFICATE DOES NOT AMEND, EXTEND OR ALTER THE COVERAGE AFFORDED BY THE POLICIES BELOW.

INSURED

WESTLAKE QUARRY & MATERIALS
12976 ST. CHARLES ROCK RD.
BRIDGETON, MO 63044

COMPANIES AFFORDING COVERAGE

COMPANY LETTER A	CONTINENTAL CASUALTY
COMPANY LETTER B	TRANSCONTINENTAL INS. CO.
COMPANY LETTER C	
COMPANY LETTER D	
COMPANY LETTER E	

COVERAGES

THIS IS TO CERTIFY THAT POLICIES OF INSURANCE LISTED BELOW HAVE BEEN ISSUED TO THE INSURED NAMED ABOVE FOR THE POLICY PERIOD INDICATED. NOTWITHSTANDING ANY REQUIREMENT, TERM OR CONDITION OF ANY CONTRACT OR OTHER DOCUMENT WITH RESPECT TO WHICH THIS CERTIFICATE MAY BE ISSUED OR MAY PERTAIN, THE INSURANCE AFFORDED BY THE POLICIES DESCRIBED HEREIN IS SUBJECT TO ALL THE TERMS, EXCLUSIONS, AND CONDITIONS OF SUCH POLICIES.

CO LTR	TYPE OF INSURANCE	POLICY NUMBER	POLICY EFFECTIVE DATE (MM/DD/YY)	POLICY EXPIRATION DATE (MM/DD/YY)	ALL LIMITS IN THOUSANDS	
A	X GENERAL LIABILITY X COMMERCIAL GENERAL LIABILITY [ ] CLAIMS MADE [ ] OCCURRENCE X OWNER'S & CONTRACTORS PROTECTIVE X X	9 00250256	3/15/87	3/15/88	GENERAL AGGREGATE PRODUCTS-COMP/OPS AGGREGATE PERSONAL & ADVERTISING INJURY EACH OCCURRENCE FIRE DAMAGE (ANY ONE FIRE) MEDICAL EXPENSE (ANY ONE PERSON)	$,000,00 $,000,00 $,000,00 $,000,00 $,000,00 $,000,00
	AUTOMOBILE LIABILITY X ANY AUTO X ALL OWNED AUTOS SCHEDULED AUTOS X HIRED AUTOS NON-OWNED AUTOS X GARAGE LIABILITY	500250258	3/15/87	3/15/88	CSL $ BODILY INJURY (PER PERSON) $ (combined) ONE MILLION BODILY INJURY (PER ACCIDENT) $ PROPERTY DAMAGE $	
	EXCESS LIABILITY OTHER THAN UMBRELLA FORM				EACH OCCURRENCE $	AGGREGATE $
B	WORKERS' COMPENSATION AND EMPLOYERS' LIABILITY				STATUTORY $ (EACH ACCIDENT) $ (DISEASE-POLICY LIMIT) $ (DISEASE-EACH EMPLOYEE)	
	OTHER					

DESCRIPTION OF OPERATIONS/LOCATIONS/VEHICLES/RESTRICTIONS/SPECIAL ITEMS

LAI 0230

CERTIFICATE HOLDER

ST. LOUIS COUNTY
GOVERNMENT BUILDING
7900 FORSYTH
CLAYTON, MO 63105

CANCELLATION

SHOULD ANY OF THE ABOVE DESCRIBED POLICIES BE CANCELLED BEFORE THE EXPIRATION DATE THEREOF, THE ISSUING COMPANY WILL ENDEAVOR TO MAIL DAYS WRITTEN NOTICE TO THE CERTIFICATE HOLDER NAMED TO THE LEFT, BUT FAILURE TO MAIL SUCH NOTICE SHALL IMPOSE NO OBLIGATION OR LIABILITY OF ANY KIND UPON THE COMPANY, ITS AGENTS OR REPRESENTATIVES.

AUTHORIZED REPRESENTATIVE

Certificate of Insurance

THIS CERTIFICATE IS ISSUED AS A MATTER OF INFORMATION ONLY AND CONFERS NO RIGHTS UPON YOU THE CERTIFICATE HOLDER. THIS CERTIFICATE IS NOT AN INSURANCE POLICY AND DOES NOT AMEND, EXTEND, OR ALTER THE COVERAGE AFFORDED BY THE POLICIES LISTED BELOW.

LIBERTY MUTUAL

LIBERTY MUTUAL INSURANCE COMPANY • LIBERTY MUTUAL FIRE INSURANCE COMPANY
LIBERTY INSURANCE CORPORATION – BOSTON, MA

This is to Certify that

West Lake Quarry & Material Co.
13570 St. Charles Rock Road
Bridgeton, MO 63044

Name and address of Insured.

is, at the issue date of this certificate, insured by the Company under the policy(ies) listed below. *The insurance afforded by the listed policy(ies) is subject to all their terms, exclusions and conditions and is not altered by any requirement, term or condition of any contract or other document with respect to which this certificate may be issued.

TYPE OF POLICY	CERT. EXP. DATE	POLICY NUMBER	LIMITS OF LIABILITY	
WORKERS' COMPENSATION	11/4/88	WC1-141-032371-017	COVERAGE AFFORDED UNDER W.C. LAW OF THE FOLLOWING STATES: MO	COV. B Bodily Injury By Accident 100,000 Ea. Acc. Bodily Injury By Disease 100,000 Ea. Person Bodily Injury By Disease 500,000 Pol. Limit
☐ CLAIMS MADE RETRO DATE ☐ OCCURRENCE			General Aggregate - Other than Products/Completed Operations Products/Completed Operations Aggregate Bodily Injury and Property Damage Liability per occurrence Personal and Advertising Injury per person/organization Other	
SPECIAL/EXCL. ENDORSEMENTS				
☐ OWNED ☐ NON-OWNED ☐ HIRED			$ EACH ACCIDENT-SINGLE LIMIT-B.I. AND P.D. COMBINED $ EACH PERSON $ EACH ACCIDENT OR OCCURRENCE	$ EACH ACCIDENT OR OCCURRENCE

LOCATION(S) OF OPERATIONS & JOB # (If Applicable)

DESCRIPTION OF OPERATIONS:

*NOTE: You will NOT be notified annually of the continuation of this coverage. You will be notified if this coverage is terminated or reduced.

NOTICE OF CANCELLATION: THE COMPANY WILL NOT TERMINATE OR REDUCE THE INSURANCE AFFORDED UNDER THE ABOVE POLICIES UNLESS _____ DAYS NOTICE OF SUCH TERMINATION OR REDUCTION HAS BEEN MAILED TO:

CERTIFICATE HOLDER → St. Louis County

[signature]
AUTHORIZED REPRESENTATIVE

11/13/87 ss St. Louis
DATE ISSUED OFFICE

APPLICATION FOR OPERATING PERMIT

Solid waste disposal area or solid waste processing facility: (check only one)

- [ ] Sanitary landfill
- [ ] Incinerator
- [ ] Compost plant
- [ ] Other (specify) _____
- [x] Demolition landfill
- [ ] Transfer station
- [ ] Resource recovery plant

Name of Area or Facility: West Lake Landfill, Inc.

Location: City: Bridgeton County: St. Louis

U.S. Survey 47 ____ 1/4 ____ 1/4 ____ 1/4, Section ____, Township 47N, Range 5E

Brief description of area or facility for which application for permit is made: (such as size or capacity)

22-Acre demolition landfill

Check type of waste proposed to be accepted:

- [ ] Municipal solid waste
- [ ] Bulky waste
- [ ] Dead animals
- [ ] Incinerator residue
- [x] Demolition and construction waste
- [ ] Brush and untreated wood waste
- [ ] Septic tank pumpings
- [ ] Wastewater treatment plant sludges
- [ ] Other sludges (specify) _____
- [ ] Liquids (specify) _____
- [ ] Industrial process waste (specify) _____
- [ ] Hazardous wastes (specify) _____
- [ ] Other waste (specify) _____

Registered engineer or consulting engineering firm submitting plans:

Name: Reitz & Jens, Inc. Phone: 314/993-4132

Address: 1040 N. Lindbergh

City: St. Louis State: MO Zip Code: 63132

OPERATOR: (Person principally responsible for the operation.)

Name: West Lake Landfill, Inc. Phone: 314/739-1122

Address: 13570 St. Charles Rock Rd.

City: Bridgeton State: MO Zip Code: 63044

OWNER: (Legal owner of land or facility if different than operator.)

Name: Same Phone: _____

Address: _____

City: _____ State: _____ Zip Code: _____

If granted this permit, we the undersigned, agree to abide by the rules, regulations, orders and decisions of the Missouri Department of Natural Resources. We understand that in the event of any false or fraudulent information in the application, plans and data, or of failure to operate the area or facility in a proper and legal manner, the permit may be revoked after due notice from the Missouri Department of Natural Resources. We understand the permit is not transferable.

[illegible] President — SIGNATURE OF OPERATOR — Mar 26 1984 — DATE

West Lake Landfill Inc — SIGNATURE OF OWNER — Mar 26, 1984 — DATE

801 SOUTH BRENTWOOD BOULEVARD
CLAYTON, MISSOURI 63105

DATE 12 - 18 - 87

RECEIVED OF West Lake Landfill Inc.

AMOUNT 3000.00

CASH _____ CHECK X OTHER _____

FOR Sanitary Landfill Permit # 3306

ACCOUNT NUMBER _____ TOTL 3000.00
0954 01 1 12/18/87

CLERK El

NO. 00033

AMOUNT PAID

3000.00

Corroon & Black of Missouri, Inc.
Corroon & Black Plaza
8112 Maryland Ave.
St. Louis, Missouri 63105-3721
Telephone: 314-721-8400
Telex No. 44-2386
Fax No. 314-725-6727
Multinational Corporate Insurance Brokers

December 22, 1987

WEST LAKE COMPANIES
RECEIVED
DEC 2 1987
PRESIDENT

West Lake Quarry & Material Co.
13570 St. Charles Rock Road
Bridgeton, MO 63044

Attn: Mr. William E. Whitaker, President

Re: Compliance Bond/St. Louis County
Bond #S100-6230

Dear Mr. Whitaker:

As requested, enclosed please find compliance bond in the amount of $30,000. Please sign the enclosed bond where indicated by the red "x" and affix your corporate seal prior to providing to St. Louis County. I have also enclosed a copy of the bond for your information and records.

Should you have any questions regarding the enclosed, please do not hesitate to contact me.

Sincerely,

CORROON & BLACK OF MISSOURI, INC.

Mary L. Michaels
Mary L. Michaels
Assistant Vice President

cc: Mr. Spencer Stuart

Enclosures

MM

LAI 0231

/

CITY OF BRIDGETON, MISSOURI

OFFICE OF THE CITY ENGINEER

DATE 1-18-88

Application of Excavation and Grading Permit

APP. № 002190

at West Lake Quarry and Material Company

FILE REF. _____

Reason for work: (new construction or other) To excavate material for use as cover material at the adjacent landfill.

Date of Start Immediately

Estimated Cost of Work _____

Owner West Lake Quarry and Material Co. (NAME) 12976 St. Charles Rock Road Bridgeton, Mo. 63044 (ADDRESS) (739-1122) (PHONE)

Contractor Same as above. (NAME) (ADDRESS) (PHONE)

Surveyor or Engineer Volz Engineering (NAME) 10849 Indian Head Industrial Drive St. Louis, Mo. 63132 (ADDRESS) (426-6212) (PHONE)

Applicant hereby deposits with the City a surety bond or cash in the sum of $ 1,000.00 from preceding Permit No. 002335 and hereby consents and agrees that the City may use and apply such cash or the proceeds of such bond to pay any cost or expense incurred by the City as the result of the failure of the applicant to complete all work required by applicant under Ordinance 70-73 of the City of Bridgeton, all as provided in said Ordinance.

TWO SETS OF MAPS AND PLANS WITH SPECIFICATION MUST ACCOMPANY APPLICATION - SEE ATTACHED SHEET FOR DETAILS REQUIRED ON PLANS.

Permit Cost ..... $ 50.00

Inspection Fee .. $ .00

TOTAL ..... $ 50.00

Signature of Owner or Authorized Agent

(NAME) W. E. Whitaker, President
West Lake Quarry and Material Company
12976 St. Charles Rock Road
(ADDRESS) Bridgeton, Mo. 63044

(314) 739-1122
(PHONE)

LAI 0232

No. #09503591 PREMIUM $ 100.00

JUDICIAL AND MISCELLANEOUS SURETY DEPARTMENT

Fidelity and Deposit Company

HOME OFFICE OF MARYLAND BALTIMORE, MD. 21203

Continuation Certification

FOR MISCELLANEOUS TERM BONDS

West Lake Quarry & Material Co. [redacted]

as Principal, and the FIDELITY AND DEPOSIT COMPANY OF MARYLAND, as Surety, in a certain Bond, No. #09503591, dated the 11th day of August 19 82, in the penalty of Ten Thousand and No/100---------- Dollars ($ 10,000.00), in favor of City of Bridgeton, Missouri

, do hereby continue said bond in force for the further term of one year beginning on the 11th day of August 19 88

Excavation and Grading Bond

COPY

PROVIDED, however, that said bond, as continued hereby, shall be subject to all its terms and conditions, except as herein modified, and that the liability of the said FIDELITY AND DEPOSIT COMPANY OF MARYLAND under said bond and any and all continuations thereof shall in no event exceed in the aggregate the above named penalty, and that this certificate shall not be valid unless signed by said Principal.

Signed, sealed and dated this 7th day of July 19 88

Witness:

~~West Lake~~ Quarry & Material Co. [redacted] (SEAL)
Principal

By: (SEAL)
Principal

(SEAL)
Principal

FIDELITY AND DEPOSIT COMPANY OF MARYLAND

By Jessie McNary
Jessie McNary, Attorney-in-Fact

J333-

LAI 0233

1

WEST LAKE

West Lake Landfill, Inc.
13570 St. Charles Rock Rd.
Bridgeton, MO 63044
(314) 739-1122

W.E. Whitaker
President

December 29, 1987

Mary L. Michaels, Asst. Vice President
Corroon & Black of Missouri, Inc.
Corroon & Black Plaza
8112 Maryland Avenue
St. Louis, MIssouri 63105-3721

Re: Compliance Bond/St. Louis County
Bond #S100-6230

Dear Ms. Michaels:

As instructed, attached is the above referenced compliance bond which was issued to West Lake Quarry and Material Company in error. Please reissue the bond showing West Lake Landfill, Inc. as the principal and return to us for execution.

Your assistance in this matter is appreciated.

Very truly yours,

WEST LAKE LANDFILL, INC.

W. E. Whitaker
President

WEW:gc

Enclosure

LAI 0234

4

CORROON & BLACK
of Missouri, Inc.

WEST LAKE COMPANIES
RECEIVED
JAN 07 1988
PRESIDENT

December 31, 1987

Mr. W.E. Whitaker
President
West Lake Landfill, Inc.
13570 St. Charles Rock Road
Bridgeton, MO 63044

Re: Compliance Bond/St. Louis County
Bond #S100-6230

Dear Mr. Whitaker:

Thank you for returning to me the original bond executed in error. I have attached the replacement bond issued in the correct company name and ask that you sign where indicated by the red "x" and affix your corporate seal prior to providing to St. Louis County. I have also enclosed a copy of the bond for your information and records.

I apologize for any inconvenience I may have caused and appreciate your assistance.

Should you have any questions regarding the enclosed, please do not hesitate to contact me.

Sincerely,

CORROON & BLACK OF MISSOURI, INC.

Mary L. Michaels

Mary L. Michaels
Assistant Vice President

Enclosure

MM

Corroon & Black Plaza 8112 Maryland Avenue St. Louis, Missouri 63105-3721
(314) 721-8400 Telex 44-2386 Fax (314) 725-6727
Multinational Corporate Insurance Brokers

LAI 0235

BOND

GUARANTEEING COMPLIANCE WITH THE ORDINANCES, RULES AND REGULATIONS OF ST. LOUIS COUNTY, MISSOURI, OR IT'S AGENCIES REGULATING THE WASTE OPERATION OF A SANITARY LANDFILL OR DEMOLITION LANDFILL

COPY

Bond Amount: $30,000.00 Bond No. S100-6230

KNOW ALL MEN BY THESE PRESENTS:

That we, WEST LAKE LANDFILL, INC. (Principal) of the County of St. Louis State of Missouri

as principal and Washington International Insurance Company (Surety)

as a corporation, duly organized and doing business under and by virtue of the laws of the State of Arizona, and authorized to do business in the State of Missouri, and duly licensed for the purpose of making, guaranteeing, and becoming sole surety upon bonds required or authorized by the laws of the State of Missouri, as surety, are held and firmly bound unto St. Louis County, Missouri, in the sum of Thirty Thousand Dollars and no cents, lawful money of the United States of America, for the payment whereof well and truly to be made, we bind ourselves, our heirs, executors, administrators, successors and assigns jointly and severally; firmly by these presents.

The Condition of the foregoing obligation is such that,

WHEREAS, the above-named principal has made application to the St. Louis County Health Department for the issuance of a license to operate a Sanitary and/or Demolition Landfill; and

WHEREAS, St. Louis County, Missouri, under the authority of its charter has enacted ordinances regulating the operation of landfills, which ordinances are set forth in Chapter 607 of the St. Louis County, Missouri, enacted 1987.

WHEREAS, under the terms of said Chapter 607.690 [illegible] or corporate surety bond in the sum of Thirty Thousand Dollars and no cents is required of the said Principal and a responsible surety payable to St. Louis County, Missouri; said bond conditioned upon the faithful and proper compliance with all of the terms, conditions, provisions, requirements and specifications of said Chapter 607 and the rules and regulations adopted thereunder;

Now, therefore, if the above bounden principal shall fully comply with the provisions of Chapter 607, SLCRO, 1987, and all amendments thereto and all valid rules and regulations issued thereunder by the St. Louis County Health Department, then this obligation shall be null and void, otherwise to remain in full force and effect.

The duration of this bond shall be from the time the same is filed with the St. Louis County Health Department until such time as said Department may cancel the same.

The St. Louis County Health Department may, upon not less than thirty days written request addressed to the said Department and upon satisfactory proof being furnished by the principal or surety that all provisions and conditions of this bond and said chapter 607, SLCRO, 1987, have been complied with, cancel this obligation and release the principal and surety from liability hereunder.

In the event of a default by the principal of any of the provisions and conditions of this bond or Chapter 607, SLCRO, 1987, the surety shall be responsible for the immediate and full compliance with all such provisions and conditions; upon default of the surety to so comply, then such compliance shall be performed by the St. Louis county Health Department, and this obligation shall thereupon be immediately due and payable, pursuant to Chapter 607, SLCRO, 1987.

IN WITNESS WHEREOF, the above bounden parties have executed this instrument under their several hands and seals this 22nd day of December, 19 87, the name and corporate seal of each corporate party being hereto affixed and these presents duly signed by its undersigned representative, pursuant to authority of its governing body.

(Seal)

WEST LAKE LANDFILL, INC.

Principal

(Seal)

WASHINGTON INTERNATIONAL INS. CO.

Surety

BY: Mary L. Michaels

Mary L. Michaels, Attorney-in-Fact

Approved: _____

DOCHMC

Approved: _____

County Counselor

Note: When Principal or Surety execute this bond by agent, a certified copy of the power of attorney must be attached hereto.

All signatures must be acknowledge and subscribed before a Notary Public who shall attach his jurat hereto.

All corporate officers signatures shall be certified to by the corporate secretary by acknowledging and subscribing the same before a Notary Public who shall attach his jurat hereto.

3

WEST LAKE

West Lake Landfill, Inc.
13570 St. Charles Rock Rd.
Bridgeton, MO 63044
(314) 739-1122

W.E. Whitaker
President

January 7, 1988

Mr. Leon Golfin, Administrative Chief
St. Louis County DOCHMC
Waste Management Section
801 South Brentwood Boulevard
St. Louis, Missouri 63105

Dear Mr. Golfin:

As promised in my letter to you of December 14, 1987, enclosed is the Surety Bond covering the West Lake sanitary and demolition landfills required by Section 607.690 of Ordinance No. 13320 of the St. Louis County Waste Management Code for sanitary and demolition landfills.

Thank you for your assistance in this matter.

Very truly yours,

WEST LAKE LANDFILL, INC.

W. E. Whitaker
President

WEW:gc

Enclosure

bcc: Bill Cannney

LAI 0236

-St. Louis Co. - Landfill License Renewal - (SANITARY)

1) A copy of the waste facility plan including engineering drawings, operation manual, etc. are enclosed. A revised plan for the design of the "Chimney drains" has been submitted to the MDNR, as shown on the engineering plans.

2) Total sanitary 968,000 yds^3 period of Oct. 1986 thru Sept. 1987.

3) Enclosed are the quarterly and annual water analysis reports for the (3) ground water monitoring wells (1201), (1202) and 1203 as required by MDNR, from the 3rd quarter Of 1986 through the 3rd quarter of 1987.

4) Leachate - discharged to the MSD sewer system from June 1986 to June 1987 = 26,996 c.c.f.

Methane - burned off into atmosphere. No accurate measurement possible.

(5) Present Price Schedule

Sanitary - $4.55/$yd^3$

Anticipated Price Schedule

Sanitary -

(6) NONE

(7) None -

(8) (a) (4) Leachate Collection ~~Wells~~ Riser columns installed in new landfill area
(b) (2) Gas collection ~~Wells~~ Riser columns including laterals installed in new landfill area
(c) (3) Gas monitoring wells installed on north east perimeter
(d) (2) Two additional methane collection wells completed and tied in to Gas flare
(e) Aerators (4) installed in leachate holding lagoon

(9) Sanitary landfill proceeding with infrastructures per plans as volume of business necessitates.

(10) - Copy of closure and post closure bond. Not required until January 1, 1988 - a copy will be forwarded when submitted to ENDNR.

(11) a - Active face area in the next 12 months = (2)
b - West Lake Landfill, Inc. will comply with the required bonding per acre.

(12) Certificate of Insurance
(1) Public Liability and Auto Liability.
(2) Workmens compensation insurance.

(13) No plan modification is anticipated for the year of June 1987 to June 1988.

ANNUAL SANITARY LICENSE FEE - $3,000

Power of Attorney

FIDELITY AND DEPOSIT COMPANY OF MARYLAND

HOME OFFICE, BALTIMORE, MD

KNOW ALL MEN BY THESE PRESENTS: That the FIDELITY AND DEPOSIT COMPANY OF MARYLAND, a corporation of the State of Maryland, by C. M. PECOT, JR. , Vice-President, and C. W. ROBBINS , Assistant Secretary, in pursuance of authority granted by Article VI, Section 2, of the By-Laws of said Company, which are set

STATE OF MISSOURI
CITY OF ST. LOUIS } SS:

On this 6th day of July 19 88, before me appeared Jessie McNary

to me personally known, who being by me duly sworn, did say that he is Attorney-in-Fact of the FIDELITY AND DEPOSIT COMPANY OF MARYLAND, a corporation organized under the laws of the State of Maryland, and that the seal affixed to the foregoing instrument is the corporate seal of said corporation; and that said instrument was signed and sealed on behalf of said corporation by authority of its Board of Directors and the said Attorney-in-Fact acknowledged said instrument to be the free act and deed of said corporation.

IN TESTIMONY WHEREOF, I have hereunto set my hand and notarial seal, the day and year first above written.

My term expires JAN 27 1989

Madeline Burns
Madeline Burns, Notary Public
State of Missouri, St. Louis County

BR(79)09—

On this 20th day of August , A.D. 19 87, before the subscriber, a Notary Public of the State of Maryland, in and for the City of Baltimore, duly commissioned and qualified, came the above-named Vice-President and Assistant Secretary of the FIDELITY AND DEPOSIT COMPANY OF MARYLAND, to me personally known to be the individuals and officers described in and who executed the preceding instrument, and they each acknowledged the execution of the same, and being by me duly sworn, severally and each for himself deposeth and saith, that they are the said officers of the Company aforesaid, and that the seal affixed to the preceding instrument is the Corporate Seal of said Company, and that the said Corporate Seal and their signatures as such officers were duly affixed and subscribed to the said instrument by the authority and direction of the said Corporation.

IN TESTIMONY WHEREOF, I have hereunto set my hand and affixed my Official Seal, at the City of Baltimore, the day and year first above written.

CAROL J. FABER NOTARY PUBLIC BALTIMORE CITY, MD

Carol J. Faber

Notary Public Commission Expires July 1, 1990

CERTIFICATE

I, the undersigned, Assistant Secretary of the FIDELITY AND DEPOSIT COMPANY OF MARYLAND, do hereby certify that the original Power of Attorney of which the foregoing is a full, true and correct copy, is in full force and effect on the date of this certificate; and I do further certify that the Vice-President who executed the said Power of Attorney was one of the additional Vice-Presidents specially authorized by the Board of Directors to appoint any Attorney-in-Fact as provided in Article VI, Section 2, of the By-Laws of the FIDELITY AND DEPOSIT COMPANY OF MARYLAND.

This Certificate may be signed by facsimile under and by authority of the following resolution of the Board of Directors of the FIDELITY AND DEPOSIT COMPANY OF MARYLAND at a meeting duly called and held on the 16th day of July, 1969.

RESOLVED: "That the facsimile or mechanically reproduced signature of any Assistant Secretary of the Company, whether made heretofore or hereafter, wherever appearing upon a certified copy of any power of attorney issued by the Company, shall be valid and binding upon the Company with the same force and effect as though manually affixed."

IN TESTIMONY WHEREOF, I have hereunto subscribed my name and affixed the corporate seal of the said Company, this 6th day of July, 19 88.

Christopher T. Madden
Assistant Secretary

079

LAI 0237

ST. LOUIS COUNTY, MISSOURI
GENE McNARY, COUNTY EXECUTIVE

DEPARTMENT OF COMMUNITY
HEALTH AND MEDICAL CARE
KENNETH BALDWIN
ACTING DIRECTOR

DIVISIONS:
ST. LOUIS COUNTY HEALTH DEPARTMENT
ST. LOUIS COUNTY MEDICAL EXAMINER
ST. LOUIS COUNTY EMERGENCY MEDICAL SERVICES

January 27, 1988

W. E. Whitaker, President
West Lake Landfill, Inc.
13570 St. Charles Rock Road
Bridgeton, MO 63044

Dear Mr. Whitaker:

Please find attached your Sanitary and Demolition Landfill annual renewal Operating Permits No. 3306 and No. 3307 from St. Louis County, Waste Management, with an expiration date of June 22, 1988.

Your cooperation and patience was appreciated during this first permitting cycle under our new Ordinance, Chapter 607. Policy and procedure, particularly as they related to insurance and operating bonds, caused extended delays. It is anticipated that subsequent permitting shall be more forthright.

Very truly yours,

Leon A. Golfin

Leon A. Golfin
Administrative Chief
Waste Management Section

LAG/eh

cc: Ron Darling, Waste Management, St. Louis County

801 S. BRENTWOOD BOULEVARD, CLAYTON, MISSOURI 63105 / (314) 854-6000

DOCHMC is an Equal Opportunity/Affirmative Action Employer. Services & benefits are provided on a non-discriminatory basis.

SANITARY LANDFILL, DEMOLITION LANDFILL, WASTE PROCESSING FACILITY OR TRANSFER STATION

Sanitary Landf.
Fee $3,000.00

6

To: St. Louis County Department of
Community Health and Medical Care
Waste Management Section
801 South Brentwood Boulevard
St. Louis, Missouri 63105

I (We) W. E. Whitaker the undersigned, apply for a renewal of permit to operate a sanitary landfill, demolition landfill, waste processing facility or transfer station, in St. Louis County, Missouri, as provided in Chapter 607.550-607.560.

ST. LOUIS COUNTY
HEALTH DEPARTMENT
DEC 18 1987
3000.00
Per Rec. No.

Owner: West Lake Landfill, Inc.

Company: West Lake Landfill, Inc.

Address: 12976 St. Charles Rock Road, Bridgeton, Mo.

Date: November 11, 1987 Zip 63044

Permit # 3306

(1) Any changes in the waste facility Plan which must be made to reflect actual usage or conditions.

A copy of the waste facility plan including engineering drawings, operation manual, etc. are enclosed. A revised plan for the design of the "Chimney drains" has been submitted to the MDNR, as shown on the engineering plans.

(2) Total waste received at the facility during the previous 12 months.

Total sanitary - 968,000 yds.^{3} period of Oct. 1986 thru Sept. 1987.

(3) Water quality sampling results, if any.

Enclosed are the quarterly and annual water analysis reports for the (3) ground water monitoring wells (1201), (1202) and 1203 as required by MDNR, from the 3rd quarter of 1986 through the 3rd quarter of 1987.

(4) The quantity of leachate and/or methane treated.

Leachate - discharged to the MSD sewer system from June 1986 to June 1987 = 26,996 c.c.f.

(5) The price schedule in effect and the price schedule anticipated for the succeeding year.

Sanitary - $4.55/yd.^{3}

Anticipated Price Schedule
Sanitary - $5.00/yd.^{3}

LAI 0239

amount, by volume of materials salvaged or processed into usable materials from site.

NONE

(7) Equipment replaced or changed or anticipated to be replaced or changed since last permitting.

NONE

(8) A report indicating the infrastructures which have been put in place since last permitting. (3) Leachate collection riser columns installed in the new landfill area.
(3) Methane collection riser columns installed in new landfill area.
(3) Gas monitoring wells installed in the N.E. perimeter of the landfill.
(2) Additional methane wells drilled and tied into the gas flare.
(4) Aerators installed in leachate holding lagoon.

(9) If the facility is still under construction, whether the construction is proceeding according to the schedule shown in the waste facility Plan.

Sanitary landfill proceeding with infrastructures per plans as volume of business necessitates.

(10) Attach copy of Closure and post-closure bond in accordance with Chapter 607.700-607.710.
Not required until Jan. 1, 1988, will be forwarded when submitted to the Missouri Dept. of Natural Resources.

(11) Operating Bond requirements in accordance with Section 607.690 for landfills.
How many acres of active face area will you use in the next 12 months _____.
For landfills, please attach copy of bond for $10,000 per acre.
A - Active face area in the next 12 months = (2)
B - West Lake Landfill, Inc. will comply with the required bonding per acre.

(12) State provisions made for Insurance requirements in accordance with Section 607.680.

See attached certificates of insurance.

(13) Provide required statement of any Plan Modification as per Section 602.620, 607.690 (operating bond), 607.700 (closure bond), and 607.710 (post-closure bond).

No plan modfication is anticipated for the year of June 1987 to June 1988.

Please attach the annual license fee in accordance with 607.570 fee schedule.

Permit No. 3306

For Office Use by
St. Louis County Health Department
Waste Management

Name of Facility West Lake Sanitary Landfill

	Approved	Facility Plan
1-25-88	$20,000	Operating Bond
	MDNR	Closure Bond
	MDNR	Post-Closure Bond
	Approved	Insurance
12-18-87	$3,000.00	Fee

_____ Additional Information Necessary

_____ Date _____

_____ Date _____

_____ Date _____

X Approved

_____ Expiration Date

Leon A. Golfin Date 1/26/88

Signature of Director of Health or Authorized Agent

Leon A. Golfin, Administrative Chief Date 1-26-88

Print Name/Title

A copy will be forwarded to the applicant.

Form LR.2-87

FACILITY OR TRANSFER STATION Demolition Landfill
Fee $750.00 P50

To: St. Louis County Department of
Community Health and Medical Care
Waste Management Section
801 South Brentwood Boulevard
St. Louis, Missouri 63105

I (~~We~~) W. E. Whitaker the undersigned, apply for a renewal of permit to operate a sanitary landfill, demolition landfill, waste processing facility or transfer station, in St. Louis County, Missouri, as provided in Chapter 607.550-607.560.

Owner: West Lake Landfill, Inc.

Company: West Lake Landfill, Inc.

Address: 12976 St. Charles Rock Road, Bridgeton, Mo.

Date: November 11, 1987 Zip 63044

(1) Any changes in the waste facility Plan which must be made to reflect actual usage or conditions.

A copy of the waste facility plan including engineering drawings, etc. are enclosed.

(2) Total waste received at the facility during the previous 12 months.

Approximately 169,000 cu. yds.

ST. LOUIS COUNTY
HEALTH DEPARTMENT
DEC 18 1987
750.00
Per ee Rec. No.

Permit # 3307

(3) Water quality sampling results, if any.

N/A

(4) The quantity of leachate and/or methane treated.

Not required

(5) The price schedule in effect and the price schedule anticipated for the succeeding year

Present Price Schedule - Demolition $5.60 cu./yd. Anticipated - Demolition $6.00 cu./yd.

(6) The amount, by volume of materials salvaged or processed into usable materials from waste.

Sold as scrap metal - approximately 1,100 tons last year.

(7) Equipment replaced or changed or anticipated to be replaced or changed since last permitting.

None

(8) A report indicating the infrastructures which have been put in place since last permitting.

None

(9) If the facility is still under construction, whether the construction is proceeding according to the schedule shown in the waste facility Plan.

N/A

(10) Attach copy of Closure and post-closure bond in accordance with Chapter 607.700-607.710. Not required until Jan 1, 1988, will be forwarded when submitted to the Missouri Dept. of Natural Resources.

(11) Operating Bond requirements in accordance with Section 607.690 for landfills. How many acres of active face area will you use in the next 12 months (1). For landfills, please attach copy of bond for $10,000 per acre.

West Lake Landfill, Inc. will comply with the required bonding per acre.

(12) State provisions made for Insurance requirements in accordance with Section 607.680.

See Attached Certificates of Insurance.

(13) Provide required statement of any Plan Modification as per Section 602.620, 607.690 (operating bond), 607.700 (closure bond), and 607.710 (post-closure bond).

No plan modification is anticipated for the year of June 1987 through June 1988.

Please attach the annual license fee in accordance with 607.570 fee schedule.

Permit No. 3307

For Office Use by
St. Louis County Health Department
Waste Management

Name of Facility West Lake Demolition

	Approved	Facility Plan
1-25-88	$10,000	Operating Bond
	MDNR	Closure Bond
	N/A	Post-Closure Bond
	Approved	Insurance
12-18-87	$750.00	Fee

_____ Additional Information Necessary

_____ Date _____

_____ Date _____

_____ Date _____

X Approved

_____ Expiration Date

Leon A. Golfin Date 1/26/88
Signature of Director of Health or Authorized Agent

Leon A. Golfin, Administrative Chief Date 1-26-88
Print Name/Title

A copy will be forwarded to the applicant.

Form LR.2-87

OFFICE USE ONLY

Special Waste I.D. 101
Special Waste Registration No. 101C-089A

4

APPLICATION FOR DISPOSAL OF SPECIAL WASTE

Initial X Renewal ____

Date 3/15/88

ST. LOUIS COUNTY HEALTH DEPARTMENT
MAY 19 1988
50.00
Pen EL Rec. No. ____

TO: St.Louis County Department
of Community Health and Medical Care
Waste Management
801 South Brentwood Boulevard
Clayton, MO 63105

The undersigned are applying for authorization to dispose of special waste in St. Louis County as provided by SLCRO Chapter 607, Section 860, 1987.

Special wastes are nonliquid wastes including treated infectious waste which are determined by MDNR, USEPA, and/or the St. Louis County Health Department to be nonhazardous or excluded from State hazardous waste requirements but requiring special handling. Asbestos waste is excluded as special waste under SLCRO Chapter 607.

I. General Information, Generator

1. Owner PQ Corporation
2. Contact Person E. Thomas Grosse
3. Company PQ Corporation
4. Address 4238 Geraldine Ave.
5. City, State, Zip St. Louis, Mo. 63115
6. Telephone (314) 383-5411
   Area Code

RECEIVED
MAY 18 1988
WASTE MANAGEMENT
DOCHMC-ENV.
COMMUNITY HEALTH SERVICES

II. Waste Description

Please attach a completed copy of the Missouri Department of Natural Resources Special Waste Disposal Request and analyses performed (not applicable to treated infectious waste) if this is an initial application. A waste sample may be requested.

1. Waste Description Tank bottoms from liquid sodium silicate storage consisting of silica sand (60%) and silicate glass (40%).

LAI 0240

2. If this is a renewal application, has the waste composition/ status or physical properties change since the date of the last application? Yes____ No____ If yes, please describe. A waste sample may be requested.

Waste Description Change

N/A

3. For treated infectious waste, please describe the method(s) of treatment or neutralization: (i.e., autoclaving, incineration, etc.):

N/A

4. For treated infectious waste, please describe the quality control safeguard(s) used including indicator(s): (i.e., time/ temp. charts, bacillus stearothermophillus spore assay, etc.):

N/A

III. Generation Rate:

1. Waste Type or Name Sodium silicate tank bottoms
2. Continuous _____ cu. yds. per month
3. Periodic 37 cu. yds. per 6 mo. (50,000 lbs)
4. One-Time Only _____ amount

IV. Transportation

1. Name of Waste Hauler Boling Concrete
2. Contact Person Tom or Randy Boling
3. Phone Number (314) 434-3881

4. County Hauling Vehicle/Mobile Container Permit Number(s) 168 thru 173

5. State License Number (s) or Vehicle Identification Number(s)

   370-113 thru 370-118

6. Type of Vehicle Body Tandem dump truck

7. Name of Bonding Agency Fidelity and Deposit Co. of Maryland

8. Bond Number #30155218

9. Bond Expiration Date November 3, 1988

10. Waste Spillproof Technique (Describe precautions taken to prevent spill and/or blowing of litter)

    Line bed with 4 mil plastic

V. Disposal

Waste loads will be individually recorded at the Disposal Facility. (Copies of Time/Temp. charts, bacteria spore assay(s), or other quality control indicators for treated infectious waste may be requested by the St. Louis County Health Department, Waste Management.

1. Name of Disposal Facility Westlake Landfill

2. Contact Person Bill Canney

3. Disposal Technique Co-disposal with municipal waste at toe of active face.

VI. Additional Pertinent Information

VII. Certification

I, the undersigned, submit this request to dispose of the named waste under SLCRO Chapter 607, 1987, and certify that the waste named herein to the best of my knowledge is not a hazardous waste as defined by the Missouri Waste Management Law and Rules, that all infectious waste is neutralized, and that the information supplied by me is correct.

E. Thomas Grosse Date 3/18/88
Signature of waste generator
or authorized representative

E. Thomas Grosse Date 3/18/88
Print Name

VIII. Application Fee: Please remit $50.00
Approved Application is effective until expiration date.

X Approved Expiration Date: July 1, 1989

_____ Disapproved

Other Conditions: _____

Leon Golfin Date 5-20-88
Signature of Director of Health or Authorized Agent

Leon Golfin
Print

Administrative Chief, Waste Management
Title

INDUSTRIAL TESTING LABORATORIES inc.

Chemists
Engineers
Metallurgists

2350 Seventh Blvd. • St. Louis, Missouri 63104 | 314/771-7111

2

THIS IS OUR 65TH ANNIVERSARY

Report No. 88-01-0436 February 4, 1988

Examination of one (1) waste sample submitted 1/20/88.

The PQ Corporation
4238 Geraldine Avenue
St. Louis, MO 63115

Attn: Mr. Gregory Byrd

TEST REPORT

E.P. Toxicity:	
Arsenic, mg/l	<0.5
Barium, mg/l	0.6
Cadmium, mg/l	<0.1
Chromium, mg/l	<0.5
Lead, mg/l	<0.5
Mercury, mg/l	<0.02
Selenium, mg/l	<0.2
Silver, mg/l	<0.5
Corrosivity:	
pH (10% solution)	12.2
Reactivity:	
Total Sulfide, ppm	<10
Total Cyanide, ppm	<10

LAI 0241

INDUSTRIAL
TESTING
LABORATORIES
inc.

Ignitability:

Flash Point, °F.	>200
Pensky Martin Closed Cup	

Respectfully submitted,

Allan M. Siegel

Allan M. Siegel, P.E.
Director

Lab No. 97958
L.B. 25545-47
RW/RHD/[illegible]

Inv. #[illegible]

OFFICE USE ONLY

Special Waste I.D. 0081
Special Waste Registration No. 81S - 088Q

4

COPY

APPLICATION FOR DISPOSAL OF SPECIAL WASTE

Initial_____ Renewal_____

Date_____

TO: St. Louis County Department
of Community Health and Medical Care
Waste Management
801 South Brentwood Boulevard
Clayton, MO 63105

The undersigned are applying for authorization to dispose of special waste in St. Louis County as provided by SLCRO Chapter 607, Section 860, 1987.

Special wastes are nonliquid wastes including treated infectious waste which are determined by MDNR, USEPA, and/or the St. Louis County Health Department to be nonhazardous or excluded from State hazardous waste requirements but requiring special handling. Asbestos waste is excluded as special waste under SLCRO Chapter 607.

ST. LOUIS COUNTY
HEALTH DEPARTMENT
PAID
MAR 28 1988
50.00
Per Rec. No.

I. General Information, Generator

1. Owner Rally' of St. Louis
2. Contact Person Ms. Pepe Finn/Mr. R.D. Laughlin
3. Company Rally' of St. Louis
4. Address 955 Executive Parkway, Suite 201
5. City, State, Zip St. Louis, Missouri 63141
6. Telephone (314) 576-1919 (Ms. Finn); (314) 991-0500 (Mr. Laughlin)
   Area Code

II. Waste Description

Please attach a completed copy of the Missouri Department of Natural Resources Special Waste Disposal Request and analyses performed (not applicable to treated infectious waste) if this is an initial application. A waste sample may be requested.

1. Waste Description 850 cubic yards of gasoline contaminated sand/clay, no free liquids. See attached Special Waste Disposal Request for component analysis.

LAI 0242

2. If this is a renewal application, has the waste composition/ status or physical properties change since the date of the last application? Yes____ No____ If yes, please describe. A waste sample may be requested.

Waste Description Change N/A

3. For treated infectious waste, please describe the method(s) of treatment or neutralization: (i.e., autoclaving, incineration, etc.): N/A

4. For treated infectious waste, please describe the quality control safeguard(s) used including indicator(s): (i.e., time/ temp. charts, bacillus stearothermophillus spore assay, etc.):

N/A

III. Generation Rate:

1. Waste Type or Name Clay and sand soil contaminated with gasoline
2. Continuous _____ cu. yds. per month
3. Periodic _____ cu. yds. per _____
4. One-Time Only 850 cubic yards amount

IV. Transportation

1. Name of Waste Hauler Kirkwood Excavating, Inc. & Ken Mudd Hauling
2. Contact Person Alan Laughlin/ Ken Mudd
3. Phone Number (314) 966-8751/ (314) 961-1712

4. County Hauling Vehicle/Mobile Container Permit Number(s) 305 thru 310

5. State License Number (s) or Vehicle Identification Number(s)
Permit # 310 309 305 306 307 308
License # 340-769/340-770/370-291/370-366/370-296/370-381

6. Type of Vehicle Body Dump Truck

7. Name of Bonding Agency KE:Continental Casulty Co./Mudd:Fidelity & Deposit Co. of Maryland

8. Bond Number KE: 522-58-21 / Mudd: 301-55533

9. Bond Expiration Date Indefinite / 5/20/87 - 5/20/88

10. Waste Spillproof Technique (Describe precautions taken to prevent spill and/or blowing of litter) Soil will be moistened and covered for transport.

V. Disposal

Waste loads will be individually recorded at the Disposal Facility. (Copies of Time/Temp. charts, bacteria spore assay(s), or other quality control indicators for treated infectious waste may be requested by the St. Louis County Health Department, Waste Management.

1. Name of Disposal Facility West Lake Quarry

2. Contact Person Mr. Larry Bockting

3. Disposal Technique Soil will be covered promptly at landfill. No other special handling, precautions or isolation from other waste required.

VI. Additional Pertinent Information

MDNR approval attached

VII. Certification

I, the undersigned, submit this request to dispose of the named waste under SLCRO Chapter 607, 1987, and certify that the waste named herein to the best of my knowledge is not a hazardous waste as defined by the Missouri Waste Management Law and Rules, that all infectious waste is neutralized, and that the information supplied by me is correct.

_____ Date 3/25/88
Signature of waste generator
or authorized representative

Richard D. Laughlin Date 3/25/88
Print Name

VIII. Application Fee: Please remit $50.00
Approved Application is effective until expiration date.

_____ Approved BJR Expiration Date: July 1, 1988
_____ Disapproved

Other Conditions: _____

_____

_____

_____

Ronald J. Darling FOR Date 3-28-88
Signature of Director of Health or Authorized Agent

Leon Golfin, Administrative Chief
Print

_____
Title

WEST LAKE

West Lake Landfill, Inc.

12976 St. Charles Rock Rd.
Bridgeton, MO 63044
(314) 739-1122

W.E. Whitaker
President

Gary - For you're file - Application to St. Louis Co. Health Dept - Landfill Permits (Demo) & Sanitary June 22-1988 to June 21, 1989. Mailed 5/20/88 - By B.C. - Check #1789 for $(3750.) Boatmen's. Sorry I forgot to copy check - B.C.

Mr. Leon Golfin
Administrative Chief
St. Louis County DOCHMC
Waste Management Section
801 South Brentwood Blvd
St. Louis, MO 63105

Dear Mr. Golfin:

Enclosed are the ap[illegible] from West Lake Landfill, Inc. for the renewal of existing permits as required by Ordinance #13320 of the St. Louis County Waste Management Code for sanitary and demolition landfills.

If there are any questions please contact Bill Canney of our staff.

Very truly yours,

WEST LAKE LANDFILL, INC.

W.E. Whitaker
President

WEW:lc

LAI 0243

Annual RENEWAL OF LICENSE FOR CONSTRUCTION AND OPERATION OF SANITARY LANDFILL, DEMOLITION LANDFILL, WASTE PROCESSING FACILITY OR TRANSFER STATION

To: St. Louis County Department of
Community Health and Medical Care
Waste Management Section
801 South Brentwood Boulevard
St. Louis, Missouri 63105

I (We) W. E. WHITAKER the undersigned, apply for a renewal of permit to operate a sanitary landfill, demolition landfill, waste processing facility or transfer station, in St. Louis County, Missouri, as provided in Chapter 607.550-607.560.

Owner: West Lake Landfill, Inc.

Company: West Lake Landfill, Inc.

Address: 12976 St. Charles Rock Road, Bridgeton, Mo.

Date: May 19, 1988 Zip 63044

(1) Any changes in the waste facility Plan which must be made to reflect actual usage or conditions.

No changes are anticipated in the waste facility plan for the year of June 1988 to June 1989.

(2) Total waste received at the facility during the previous 12 months.

Approximately 188,000 cu. yds.

(3) Water quality sampling results, if any.

N/A

(4) The quantity of leachate and/or methane treated.

Not required

LAI 0244

(5) The price schedule in effect and the price schedule anticipated for the succeeding year.

Present Price Schedule - Demolition 5.60 cu./yd. Anticipated - Demolition 6.00 cu./yd.

JOHN ASHCROFT
Governor

FREDERICK A. BRUNNER
Director

STATE OF MISSOURI
DEPARTMENT OF NATURAL RESOURCES

Division of Energy
Division of Environmental Quality
Division of Geology and Land Survey
Division of Management Services
Division of Parks, Recreation, and Historic Preservation

DIVISION OF ENVIRONMENTAL QUALITY
P.O. Box 176
Jefferson City, MO 65102

WEST LAKE COMPANIES
RECEIVED
FEB 10 1988
PRESIDENT

February 8, 1988

Mr. William E. Whitaker
West Lake Landfill, Inc.
13570 St. Charles Rock Road
Bridgeton, MO 63044

Dear Mr. Whitaker:

RE: Chimney Drain Design, West Lake Sanitary Landfill, Permit Number 118912 St. Louis County.

A request to modify the chimney drains for the above referenced landfill was received on August 31, 1987 by the Waste Management Program (WMP).

The modification replaces the approved rock filled chimney drains with a polyethylene drainage net that has a geotextile bonded to both sides. The proposal specifies the use of the TENSAR Drainage Composite DC1200 or a product of equal specifications and characteristics.

The modification of the chimney drain design is hereby approved as submitted on the documents listed below.

Documents

1. Letter from Mr. Robert M. Robinson, P.E., Burns & McDonnell, to Mr. Tom Gredell, P.E., Waste Management Program, dated August 27, 1987.

2. Plan sheet number 5, titled West Lake Landfill, Inc., Sanitary Landfill Expansion, Bridgeton, Missouri, dated June 25, 1985, revised August 28, 1987, prepared by Burns & McDonnell.

Should you have any questions, please contact Mr. Mike Phillips at (314) 751-3176.

Sincerely,

DIVISION OF ENVIRONMENTAL QUALITY

Nicholas A. Di Pasquale

Nicholas A. Di Pasquale, Director
Waste Management Program

NAD:mpl

cc: Mr. Robert M. Robinson, P.E., Burns & McDonnell

LAI 0245

ST. LOUIS COUNTY, MISSOURI
GENE McNARY, COUNTY EXECUTIVE

DEPARTMENT OF COMMUNITY
HEALTH AND MEDICAL CARE
KENNETH BALDWIN
ACTING DIRECTOR

DIVISIONS:
ST. LOUIS COUNTY HEALTH DEPARTMENT
ST. LOUIS COUNTY MEDICAL EXAMINER
ST. LOUIS COUNTY EMERGENCY MEDICAL SERVICES

June 22, 1988

WEST LAKE COMPANIES
RECEIVED
JUN 27 1988
PRESIDENT

Mr. W. E. Whitaker, President
West Lake Landfill, Inc.
13570 St. Charles Rock Road
Bridgeton, MO 63044

Dear Mr. Whitaker:

Please find attached your Demolition Landfill annual renewal Operating Permit No. 3313 from St. Louis County, Waste Management, with an expiration date of June 22, 1989.

Thank you for your timely submittal.

Very truly yours,

Leon A. Golfin

Leon A. Golfin
Administrative Chief
Waste Management Section

LAG/eh

cc: Ron Darling, Waste Management, St. Louis County

Enc.

LAI 0246

801 S. BRENTWOOD BOULEVARD, CLAYTON, MISSOURI 63105 / (314) 854-6000

DOCHMC is an Equal Opportunity/Affirmative Action Employer. Services & benefits are provided on a non-discriminatory basis.

5

For Office Use by
St. Louis County Health Department
Waste Management

Name of Facility West Lake Demolition

no change Facility Plan

$10,000 Operating Bond

MDNR Closure Bond

N/A Post-Closure Bond

Approved Insurance

$750.00 Fee

N/A Additional Information Necessary

_____ Date _____

_____ Date _____

_____ Date _____

X Approved

_____ Expiration Date

Leon A. Golfin Date 6/22/88
Signature of Director of Health or Authorized Agent

Leon A. Golfin, Administrative Chief Date 6-22-88
Print Name/Title

A copy will be forwarded to the applicant.

LAI 0247

№ 3313

ST. LOUIS COUNTY, MISSOURI

DEPARTMENT OF
COMMUNITY HEALTH AND MEDICAL CARE

Permit No. 3313 Date June 22, 1988

Name W. E. Whitaker, Pres. West Lake Landfill, Inc

Address and Location 12976 St. Charles Rock Rd. Bridgeton

is hereby granted permission to operate a demolition landfill

expires 6-22-89

under and in accordance with Ordinance No. 13320, Chapter 607 of St. Louis County and subject to the rules and regulations of the Department of Community Health and Medical Care.

Issued at Clayton, Missouri

this 22nd day of June 19 88

Signed Colin B Roden
ASSOCIATE DIRECTOR

Kenneth Baldwin
DIRECTOR

This permit is issued subject to conditions in the Application and is valid until suspended or revoked by DEPARTMENT OF COMMUNITY HEALTH AND MEDICAL CARE. It is not transferable and must be kept posted in a conspicuous place on the premises for which it was issued.

For Office Use by
St. Louis County Health Department
Waste Management

Name of Facility West Lake Sanitary Landfill

Modification Approval	Facility Plan
$20,000	Operating Bond
MDNR	Closure Bond
MDNR	Post-Closure Bond
Approved	Insurance
$3,000	Fee
N/A	Additional Information Necessary

_____ Date _____

_____ Date _____

_____ Date _____

X Approved

_____ Expiration Date

Leon A. Golfin Date 6/22/88
Signature of Director of Health or Authorized Agent

Leon A. Golfin, Administrative Chief Date June 22, 1988
Print Name/Title

A copy will be forwarded to the applicant.

Form LR.2-87

ST. LOUIS COUNTY, MISSOURI
GENE McNARY, COUNTY EXECUTIVE

DEPARTMENT OF COMMUNITY
HEALTH AND MEDICAL CARE
KENNETH BALDWIN
ACTING DIRECTOR

DIVISIONS:
ST. LOUIS COUNTY HEALTH DEPARTMENT
ST. LOUIS COUNTY MEDICAL EXAMINER
ST. LOUIS COUNTY EMERGENCY MEDICAL SERVICES

June 22, 1988

WEST LAKE COMPANIES
RECEIVED
JUN 28 1988
PRESIDENT

Mr. W. E. Whitaker, President
West Lake Landfill, Inc.
13570 St. Charles Rock Road
Bridgeton, MO 63044

Dear Mr. Whitaker:

Please find attached your Sanitary Landfill annual renewal Operating Permit No. 3312 from St. Louis County, Waste Management, with an expiration date of June 22, 1989.

The renewal permit No. 3312 contains the following restrictions:

1. A minimum fifteen (15) day stockpile of daily cover must be maintained within the boundary of pit #2.

2. Waste Management shall field verify and approve the proper depth of all areas completed with final cover, prior to vegetative seeding.

3. All leachate well levels shall be determined at least monthly and reported to Waste Management Section.

4. All leachate collection wells shall be covered or otherwise be prevented from free-venting at all times.

5. All methane gas collection condensate shall be collected and treated as leachate.

6. No "free liquids" shall be allowed in any Special Waste, or any other waste(s) at this site. USEPA paint filter test shall be used for free liquid determination, and acceptable materials will pass this test.

7. West Lake Landfill shall determine if by October 1, 1988, there are any private groundwater drinking water sources within 1/4 mile of the landfill. If so, any sources shall be placed on an annual well water sampling program, specified by Waste Management Section.

The facility plan modification of the chimney drain design as approved by MDNR on February 8, 1988, is hereby approved.

Thank you for your timely submittal.

Very truly yours,

Leon A. Golfin

Leon A. Golfin
Administrative Chief
Waste Management Section

LAG:RD:CJW

CC: Ron Darling, Waste Management Section, St. Louis County
Blaine Rhoades, Program Manager, Air, Land, and Water Branch

SENT TO ILEGION

2

ST. LOUIS COUNTY, MISSOURI

GENE McNARY, COUNTY EXECUTIVE

DIVISIONS
Emergency Medical Services
Environmental Health Services
Medical Examiner
Personal Health Services
Planning and Administration Services

DEPARTMENT OF COMMUNITY HEALTH AND MEDICAL CARE
KENNETH BALDWIN, Acting Director

November 18, 1988

Mr. Mike Whitlock
Laidlaw Waste Systems Inc.
13570 St. Charles Rock Road
Bridgeton, MO 63044

6.000

RE: Bridgeton Landfill,
Permit Transfer

Dear Mr. Whitlock:

Following receipt of Mr. Scott Schreiber's correspondence of August 11, 1988, (see attached) St. Louis County Waste Management Section (SLCWM) has been waiting for Laidlaw to formally submit an operating permit transfer for Bridgeton Landfill. In a recent conversation with Ms. Jan Meibaum, it became clear that Laidlaw was waiting for SLCWM to reply. This misunderstanding has not caused any difficulty at SLCWM and I hope the same is true at Laidlaw.

The following are requirements necessary to file with SLCWM before December 31, 1988. The anniversary date for Bridgeton Sanitary and Bridgeton Demolition Landfill's permits are June 22, 1989. Renewal applications are due at SLCWM on May 22, 1989.

1. Per 607.620(2): The past operator, West Lake Quarries, shall file a statement with SLCWM so stating that the operator wishes to make a transfer of owner/operator for both landfill permits.

2. Per 607.620(2): Laidlaw shall file, an interim renewal application (Form LR87) containing the information required by 607.560 for both landfills.

3. Per 607.620(2): Laidlaw shall file a statement that Laidlaw desires to assume the rights, duties and obligations of operation of the sanitary and demolition landfills.

4. File insurance certifications.

5. Per 607.690: File operating bond(s) (see attached form) for both landfills.

121 SOUTH MERAMEC AVENUE, CLAYTON, MISSOURI 63105 (314) 854-6000
DOCHMC is an Equal Opportunity/Affirmative Action Employer. Services & benefits are provided on a non-discriminatory basis.

LAI 0248

6. Per 607.700: File Closure Bond as specified by the State of Missouri Department of Natural Resources.

7. Per 607.710: File a Closure Bond for the sanitary landfill as specified by the State of Missouri Department of Natural Resources.

8. Please file the reorder of deed information indicating the boundary of land purchased.

9. Please file any agreements with West Lake spelling out maintenance responsibilities on adjacent land (previously filled landfill areas).

10. Please verify cover soil inventories and future needs to satisfy daily, intermediate, final, and liner/other. Please indicate strategy to obtain additional soil if a deficiency is indicated.

The private drinking water well assessment within 1/4 mile was satisfactory and completed the ordinance requirement.

A copy of Waste Management Code booklet and an Application for Disposal for Special Waste is also enclosed for your reference.

Please don't hesitate to contact myself or Ron Darling of my staff if you have any questions.

Sincerely,

Leon A. Golfin

Leon A. Golfin
Administrative Chief
Waste Management Section

LAG:RD:CJW

Enclosures: Annual Renewal License (2)
Landfill Operations Bond (2)
Letter of August 11, 1988
Application for Disposal of Special Waste
Waste Management Code Booklet

CC: Scott Schreiber, Laidlaw Regional Engineer
Ron Darling

ST. LOUIS COUNTY, MISSOURI
GENE McNARY, COUNTY EXECUTIVE

DIVISIONS
Emergency Medical Services
Environmental Health Services
Medical Examiner
Personal Health Services
Planning and Administration Services

DEPARTMENT OF COMMUNITY HEALTH AND MEDICAL CARE
KENNETH BALDWIN, Acting Director

RECEIVED MAR - 2 1989

February 28, 1989

Mr. Scott Schreiber
Laidlaw Waste Systems, Inc.
2340 South Arlington Heights Road
Suite 230
Arlington Heights, IL 60005

Dear Mr. Schreiber:

Please refer to my letter of November 18, 1988, to Mr. Mike Whitlock, appended.

I have understood from Ms. Jan Meibaum that you have been awaiting a St. Louis County Waste Section response on what Laidlaw needs to do for a formal operating permit transfer to Laidlaw, of the Bridgeton Landfills, sanitary and demolition.

These responses and requirements are in the above referenced letter of November 18, 1988, to Mr. Whitlock.

Your reply has not been received. Although both Bridgeton Sanitary and Demolition Permits do not expire until June 1989, the operating transfer from Westlake Company to Laidlaw made in late 1988 has not been validated by St. Louis County and to this date cannot be without receipt from Laidlaw of the detailed items in my November 18, 1988, letter.

I must inform you Laidlaw is now operating in non-compliance with St. Louis County Waste Management Code, Chapter 607, and will not be acceptable for annual permit renewal on June 22, 1989, when due unless a formal transfer to Laidlaw has been filed in this office.

Please call if you have any questions, or if I can help you any further in this matter.

Very truly yours,

Leon A. Golfin

Leon A. Golfin, Administrative Chief
Waste Management Section

LAG:CJW
Enclosure
CC: Mr. Mike Whitlock, Laidlaw
Ron Darling

121 SOUTH MERAMEC AVENUE, CLAYTON, MISSOURI 63105 (314) 854-6000
DOCHMC Is an Equal Opportunity/Affirmative Action Employer. Services & benefits are provided on a non-discriminatory basis.

LAI 0249

WEST LAKE

West Lake Companies
12976 St. Charles Rock Rd.
Bridgeton, MO 63044
(314) 739-1122

W.E. Whitaker
President

April 12, 1989

Mr. Leon Golfin
Administrative Chief Waste Management Section
Department of Community Health and Medical Care
121 South Meramec Avenue
Clayton, Missouri 63105

Re: Bridgeton Landfill Permit

Dear Mr. Golfin:

Mr. Scott Schreiber from Laidlaw Waste Systems, Inc. asked that I write you to help clear up any misunderstandings regarding the County permits which were issued to West Lake Landfill, Inc.

Laidlaw purchased all the outstanding stock in West Lake Landfill, Inc. on July 29, 1988. Because this was a stock purchase, West Lake Landfill, Inc.'s corporate identity did not change and all of its permits, bonds, rights, duties, and obligations, including its right to operate the sanitary and demolition landfills, were not affected as a result of that transaction. Subsequent thereto the name of West Lake Landfill, Inc. was changed to Laidlaw Waste Systems (Bridgeton), Inc.

I request that all permits for the operation of the sanitary and demolition landfills issued to West Lake Landfill, be changed to reflect the new corporate name.

It is also my understanding that Laidlaw Waste Systems (Bridgeton), Inc. has retained all responsibilities for the maintenance of the previously filled areas of their property.

I hope this clears up any misunderstanding.

Sincerely,

WEST LAKE COMPANIES

W. E. Whitaker
President

WEW:gc

ST. LOUIS COUNTY, MISSOURI
GENE McNARY, COUNTY EXECUTIVE

DIVISIONS
Emergency Medical Services
Environmental Health Services
Medical Examiner
Personal Health Services
Planning and Administration Services

DEPARTMENT OF COMMUNITY HEALTH AND MEDICAL CARE
KENNETH BALDWIN, Director

2

June 22, 1989

RECEIVED
JUN 29 1989

Scott Schreiber, Regional Engineer
Laidlaw Waste Systems, Inc.
2340 S. Arlington Heights Road, Suite 230
Arlington Heights, IL 60005

RE: Renewal License 3325 with Restrictions
Laidlaw Waste Systems, Inc. (Bridgeton)
Demolition Landfill

Dear Mr. Schreiber:

Please find attached your Demolition Landfill annual renewal Operating License No. 3325 from St. Louis County, Waste Management with an expiration date of June 22, 1989.

The following restrictions apply to your current Operating License No. 3325:

1. Final elevation/contours as approved by the facility plan shall be field verified by ground survey and/or aerial survey.

2. Final cover depth on areas previously filled to final contours shall be field verified. Insufficient final cover and vegetative cover shall be corrected by December 1, 1989.

3. Furnish Waste Management DOCHMC, by August 1, 1989, calculations and estimates of final cover (closed and current areas), daily/weekly cover, and construction soil needs in cubic yards as a total for the estimated life of the demolition landfill.

The operational and ownership transfer documentation from West Lake Company to Laidlaw Waste Systems, Inc. as required in my correspondence to you of November 18, 1988, was received in your submittal dated April 11, 1989 and is acceptable and approved.

Very truly yours,

Leon A. Golfin

Leon A. Golfin
Administrative Chief
Waste Management Section

LAG/eh

Enc.

Mike Whitlock, Laidlaw Waste Systems
Stuart Bean, MDNR-SLRO
Thomas Gredell, MDNR-Jefferson City
Richard Houchin, City of Bridgeton
Blaine Rhoades, Air, Land & Water Branch
Ron Darling, Waste Management Section

LAIDLAW

LAIDLAW WASTE SYSTEMS (MADISON) INC.

September 25, 1989

Mr. Leon Golfin, Chief
Waste Management Section, DOCHMAC
121 S. Meramac
Clayton, MO 63105

Dear Mr. Golfin:

This is to advise you of my recent conversation with Mr. Ron Darling of your staff and to update you on the status of the application for renewal license #3326 for the Westlake Landfill. The required information was recently obtained by Laidlaw Waste Systems, and we apologize for the delay on responding to Mr. Darling's letter of June 22, 1989, per my conversation with Mr. Darling, the completed application with all the necessary documents will be submitted to your office by October 6, 1989.

Please call me at (618) 656-6912 if you have any questions or comments.

Respectfully,

Miles Stotts
Assistant Regional Engineer

MS/pl

CC: Mr. Mike Whitlock
Mr. Scott Schreiber

EDWARDSVILLE LANDFILL, P.O. BOX 1162, SOUTH ROXANA, ILLINOIS 62087 (618) 656-9598

LAI 0252

LAIDLAW

LAIDLAW WASTE SYSTEMS INC.

October 3, 1989

Mr. Leon Golfin
Administrative Chief
Waste Management Section
St. Louis Co. Dept. of Community Health
& Medical Care
121 S. Meramec Ave.
Clayton, MO 63105

RE: Laidlaw Waste Systems, Inc. (Bridgeton) Demolition Landfill

Dear Mr. Golfin,

Your letter, date June 22, 1989, requested certain information regarding the Laidlaw Waste Systems (Bridgeton) Demolition Landfill. Attached is a letter to Laidlaw Waste Systems from Mr. Robert Robinson, P.F., of Burns & McDonnell which presents the requested information.

I trust you will find the submitted satisfactory. Please call me at (312) 439-6686 or Mr. Miles Stotts at (618) 656-6912 if you have any questions or need additional information.

Respectfully,

Scott Schreiber

Scott Schreiber,
Regional Engineer

SS/cw

cc: Mike Whitlock
Tom Gredell, MDNR

2340 S. Arlington Heights Road, Suite 230, Arlington Heights, Illinois 60005 (312) 439-6686

LAI 0253

EMPLOYEE - OWNED
Burns & McDonnell
ENGINEERS - ARCHITECTS - CONSULTANTS

October 23, 1989

Mr. Thomas Gredell, P.E.
Chief, Solid Waste Permits Section
Waste Management Program
Missouri Department of Natural Resources
P.O. Box 176
Jefferson City, MO 65102

Laidlaw's Bridgeton Sanitary Landfill
Project No. 89-231-4

Dear Mr. Gredell:

On July 6, 1989, we wrote you requesting authorization to conduct a trial use of 3M's Foamat Brand Synthetic Daily Cover at the above landfill. As you know 3M now owns another synthetic daily cover called SaniFoam. Since our letter in July to you, Laidlaw and 3M have reached an agreement to use SaniFoam rather than Foamat.

Therefore, we are requesting approval for the use of SaniFoam under the same conditions and arrangements as outlined in our letter of July 6, 1989. Assuming the trial period would start December 1, 1989, the trial period would be concluded about June 1, 1990 (a six month period).

Attached is a copy of 3M's literature on SaniFoam for your information. This is the same material, that we understand MDNR has approved for use at the Springfield, Missouri landfill. Your earliest approval to proceed with the trial period would be greatly appreciated.

Sincerely,

Robert M. Robinson, P.E.
Project Manager

RMR/crw.182

cc: Laidlaw Waste Systems
Stu Wagner
Dale W. Kent
Leon Golfin

LAI 0254

4800 EAST 63rd STREET, P.O. BOX 419173, KANSAS CITY, MISSOURI 64141-0173 • TEL: 816-333-4375 TWX: 910-771-3059

ST. LOUIS COUNTY, MISSOURI
GENE McNARY, COUNTY EXECUTIVE

DIVISIONS
Emergency Medical Services
Environmental Health Services
Medical Examiner
Personal Health Services
Planning and Administration Services

DEPARTMENT OF COMMUNITY HEALTH AND MEDICAL CARE
KENNETH BALDWIN, Director

October 26, 1989

OCT 27 1989

Mr. Mike Whitlock
Landfill Manager
Laidlaw Waste Systems
13570 St. Charles Rock Road
Bridgeton, MO 63044

Dear Mr. Whitlock:

It has come to my attention that Laidlaw has purchased the landfill formerly owned by West Lake Companies. Upon a change in ownership all existing operating permits become void, since the County Air Pollution Control Code does not allow the transfer of operating permits.

Enclosed please find an operating permit application form which you will need to complete, with the exception of the pollutant, emission rate and basis boxes, and return to this office with the required one hundred (100) dollar permit fee. A permit to operate in the name of Laidlaw Waste Systems will then be issued for the existing landfill flare.

Should you have questions in this matter, feel free to contact me at 854-6917.

Very truly yours,

Timothy W. Froeschner
Environmental Engineer
Air Pollution Control Section

TWF/eh

Enc.

121 SOUTH MERAMEC AVENUE, CLAYTON, MISSOURI 63105 (314) 854-6000
DOCHMC is an Equal Opportunity/Affirmative Action Employer. Services & benefits are provided on a non-discriminatory basis.

LAI 0255

ST. LOUIS COUNTY, MISSOURI
GENE McNARY, COUNTY EXECUTIVE

DIVISIONS
Emergency Medical Services
Environmental Health Services
Medical Examiner
Personal Health Services
Planning and Administration Services

DEPARTMENT OF COMMUNITY HEALTH AND MEDICAL CARE
KENNETH BALDWIN, Director

October 31, 1989

Mr. Scott Schreiber, Regional Engineer
Laidlaw Waste Systems (Madison) Inc.
2340 South Arlington Heights Road, Suite 230
Arlington Heights, IL 60005

RE: Sanitary Landfill in Bridgeton, Permit #3326 Restrictions
Letter of June 22, 1989

Dear Mr. Schreiber:

St. Louis county Department of Community Health and Medical Care, Waste Management has received and reviewed your September 25, 1989, October 3, 1989, and October 17, 1989 letters required on your Permit #3326. Information received has adequately addressed Items 1,2,3, and 5 of Permit #3326. Additional data/discussion is required to satisfy Items 4 and 6 and is requested as follows:

Item 4 Mass Action Geologic Analysis

1. Furnish data and calculations as stated.

Item 6 Methane Gas Collection

1. Include discussions and construction timetable for improvements to be completed at Pit #1.

2. Submit a date when Laidlaw Gas Recovery Systems Inc. will furnish to Waste Management Section, St. Louis County, these engineering revisions. These revisions will constitute a facility plan modification and will become an integral part of the permitted plan upon approval.

It is requested that you submit the stated remaining information by December 1, 1989. Please contact me or Ron Darling of my staff if you have any questions.

Very truly yours,

Leon A. Golfin

Leon A. Golfin
Administrative Chief
Waste Management Section

LAG/eh

cc: Blaine Rhoades, Program Manager, Air, Land & Water Branch
Ron Darling, Environmental Control Inspector, Waste Management
Nicholas DiPasquale, Director, Solid Waste Program, MDNR

11955 Natural Bridge Road, Bridgeton, Missouri 63044-2068 Phone (314) 739-7500

City of Bridgeton

RECEIVED NOV 0 6 1989

Conrad W. Bowers Mayor

November 1, 1989

Mr. Nick R. Sturzl, P.E.
Senior Project Engineer
Foth & Van Dyke
11970 Borman Drive, Suite 110
Creve Coeur, MO 63146

RE: Proposed Culvert Installation
Old St. Charles Road

Dear Mr. Sturzl:

Your letter of October 20, 1989 concerning the proposed culvert installation on Old St. Charles Road has been reviewed with the following comments:

1. The City requires that culverts placed under streets be Class III Reinforced Concrete Pipe. The corrugated metal culverts as proposed are unacceptable.
2. This proposed installation must be submitted to MSD for their review and approval. Only after this office is in receipt of a set of MSD-approved plans can we issue an excavation permit.
3. Show on plans the exact location of proposed culvert installation on Old St. Charles Road (station and road cross section) to determine that culverts have adequate cover.
4. Plans must indicate that pavement will be replaced with 7-1/2" Type X (Base) and 2" Type C asphaltic concrete.

Please submit plans with the above revisions for our review. Feel free to contact me at 739-7665 if you have any questions regarding this matter.

Sincerely,

Joseph S. Ferrante

Joseph S. Ferrante, P.E.
Assistant City Engineer

/alc

LAI 0257

2

ST. LOUIS COUNTY, MISSOURI
GENE McNARY, COUNTY EXECUTIVE

DEPARTMENT OF COMMUNITY
HEALTH AND MEDICAL CARE

EVERARD O. RUTLEDGE, M.H.A.
DIRECTOR

Division of Environmental Health Care Services
Air Pollution Control Branch

November 27, 1989

Mr. Mike Whitlock
Laidlaw Waste Systems
13570 St. Charles Rock Road
Bridgeton, MO 63044

NOV 29 1989

Dear Mr. Whitlock:

The enclosed Operating Permit number 5454 is issued under the provisions of the St. Louis County Air Pollution Control Code.

This permit does not relieve the grantee from any other requirement for obtaining an authority to operate which may be necessary under other codes or statutes.

Transfer -- A permit to operate shall not be transferable, whether by operation of law or otherwise, either from one location to another, from one piece of equipment to another, or from one person to another.

Any purported or attempted transfer of any permit to a person not named therein as a permittee or any purported or attempted transfer of a permit from one location to another or from one piece of equipment to another automatically revokes the permit.

Suspension or Revocation of Permits -- The Director may suspend or revoke a permit to operate for willful or continued violation of this Code.

Suspension or revocation of a permit to operate shall become final ten (10) days after service of notice, exclusive of the day of service, on the holder thereof.

Surrender of Permits -- An operating permit which has been revoked or suspended pursuant to the Code shall be surrendered forthwith to the Division.

Blaine J. Rhoades
Assistant Director
(for Air Pollution Control)

AP 6/6-78

LAI 0258

801 S. BRENTWOOD BOULEVARD, CLAYTON, MISSOURI 63105 / (314) 726-1100

Reissued under new owner

ST. LOUIS COUNTY
DEPARTMENT OF COMMUNITY HEALTH & MEDICAL CARE
DIVISION OF ENVIRONMENTAL HEALTH CARE SERVICES
AIR POLLUTION CONTROL SECTION

November 27, 1989 — Date

5454 — Number

OPERATING PERMIT

This permit to operate the equipment/process(es) described below is granted to:

Laidlaw Waste System
Name

13570 St. Charles Rock Road
Location of Equipment

Such operation to be pursuant to the conditions set out in Operating Permit Application No. 7153

Equipment/Process(es)

Landfill Gas Flare #1

1,000 SCFM

95+% Efficiency

Enforceable Permit Conditions

Stack/Vent Identification

Blaine J. Rhoades, Program Manager
Air Pollution Control Section

(This permit to be visibly affixed or placed in accordance with Section 612.120 St. Louis County Air Pollution Control Code.) Fee paid $

WEST LAKE

West Lake Quarry & Material Company

12976 St. Charles Rock Rd.
Bridgeton, MO 63044
(314) 739-1122

W.E. Whitaker
President

January 17, 1989

Mr. Joseph Ferrante, P.E.
Assistant City Engineer
City of Bridgeton
11955 Natural Bridge Road
Bridgeton, Missouri 63044

Re: Grading Permit for Laidlaw Waste Systems (Bridgeton)

Dear Sir:

West Lake Quarry and Material Company will exercise whatever influence it may have to insure that all city codes are met in regards to Laidlaw Waste Systems Inc. (Bridgeton) grading permit.

If I may be of any further assistance please feel free to give a call at 739-1122.

Very truly yours,

WEST LAKE QUARRY AND MATERIAL COMPANY

W. E. Whitaker
President

WEW:gc

VOLZ

ENGINEERS • LAND PLANNERS • LAND SURVEYORS

LAND DESIGN DIVISION
CARL F. LUEKER, LAND PLANNER

January 11, 1989

Mr. Whitlock
Laidlaw Waste System, Inc.
13570 St. Charles Rock Road
Bridgeton, MO 63044

RE: Grading Permit for Westlake Landfill
89-3105

Dear Mr. Whitlock:

Enclosed are four sets of information needed to obtain a grading permit for your landfill operation. Please sign the permit applications and forward two sets along with a check for $50 and a signed statement from each applicant that you will assume full responsibility for the performance of this operation (see enclosed letter from Mr. Ferrante).

The extra two sets of plans are for your file and Mr. Whitaker's file.

If you have any questions, please call.

Sincerely,

VOLZ ENGINEERING & SURVEYING, INC.

Carl Lueker

Carl F. Lueker

CFL:jv

Enclosures

cc: Mr. Whitaker

LAI 0260

10849 INDIAN HEAD INDUSTRIAL BLVD. • ST. LOUIS, MISSOURI 63132 • (314) 426-6212

11955 Natural Bridge Road, Bridgeton, Missouri 63044-2068 Phone (314) 739-7500

City of Bridgeton

Conrad W. Bowers Mayor

January 4, 1989

Mr. W. E. Whitaker, President
West Lake Quarry & Material Company
12976 St. Charles Rock Road
Bridgeton, MO 63044

RE: Expiration of Grading Permit No. 002190

Dear Sir:

This is a reminder that the above referenced grading permit will expire on January 18, 1989, and that it will be necessary to complete and submit another application and updated grading plan for review and approval. The grading plans should conform to the items listed on the enclosed supplemental instruction sheet.

We are requesting that you complete the enclosed application as co-owner, then forward to Mr. Mike Whittlock, Division Manager, Laidlaw Waste Systems, Inc., 13570 St. Charles Rock Road, Bridgeton, MO 63044, for signature as co-owner. This is necessary due to the unique situation regarding ownership of the property from which Laidlaw is excavating cover material for use in landfill operations. We are also requesting that the application be accompanied by statements from West Lake and Laidlaw in which each assumes full responsibility for performance of the operation.

West Lake Quarry & Material Company has a performance bond in the amount of $10,000.00 in force until August, 1989, which is satisfactory to the City. If you so desire, you may cancel this bond and arrange with Laidlaw to jointly furnish an excavating and grading bond in the amount of $10,000.00.

If you have any questions regarding this application procedure, please feel free to contact this office at 739-7665.

№ 3336

ST. LOUIS COUNTY, MISSOURI

DEPARTMENT OF
COMMUNITY HEALTH AND MEDICAL CARE

Permit No. 3336 Date December 6, 1990

Name Laidlaw Waste Systems (Bridgeton)

Address and Location 13570 St. Charles Rock Rd. Bridgeton

is hereby granted permission to operate a sanitary landfill

expires 6-22-91

under and in accordance with Ordinance No. 607.550-560 of St. Louis County and subject to the rules and regulations of the Department of Community Health and Medical Care.

Issued at Clayton, Missouri

this 6th day of December 19 90

Signed John B Rodem
ASSOCIATE DIRECTOR

Kenneth Baldwin
DIRECTOR

This permit is issued subject to conditions in the Application and is valid until suspended or revoked by DEPARTMENT OF COMMUNITY HEALTH AND MEDICAL CARE. It is not transferable and must be kept posted in a conspicuous place on the premises for which it was issued.

LAI 0262

NA' 'ONA . F J RNI' ' J RE CO.

115 W. 5th ST. KANSAS CITY, MO. 64105

ORDER NO. DATE '2 19

DELIVER TO

ADDRESS

CUSTOMERS ORDER NO	TIME PROMISED	TRUCK NO.	DELIVERED BY

QUAN	NUMBER	DESCRIPTION

REC. MDSE. GOOD CONDITION

REC D BY

NA' 'IONA . FURN T' J RE CO.

115 W. 5th ST. KANSAS CITY, MO. 64105

ORDER NO. DATE '2 19

DELIVER TO

ADDRESS

CUSTOMERS ORDER NO	TIME PROMISED	TRUCK NO.	DELIVERED BY

QUAN	NUMBER	DESCRIPTION

REC. MDSE. GOOD CONDITION

REC D BY