PORSF
11.3.18.1 V7

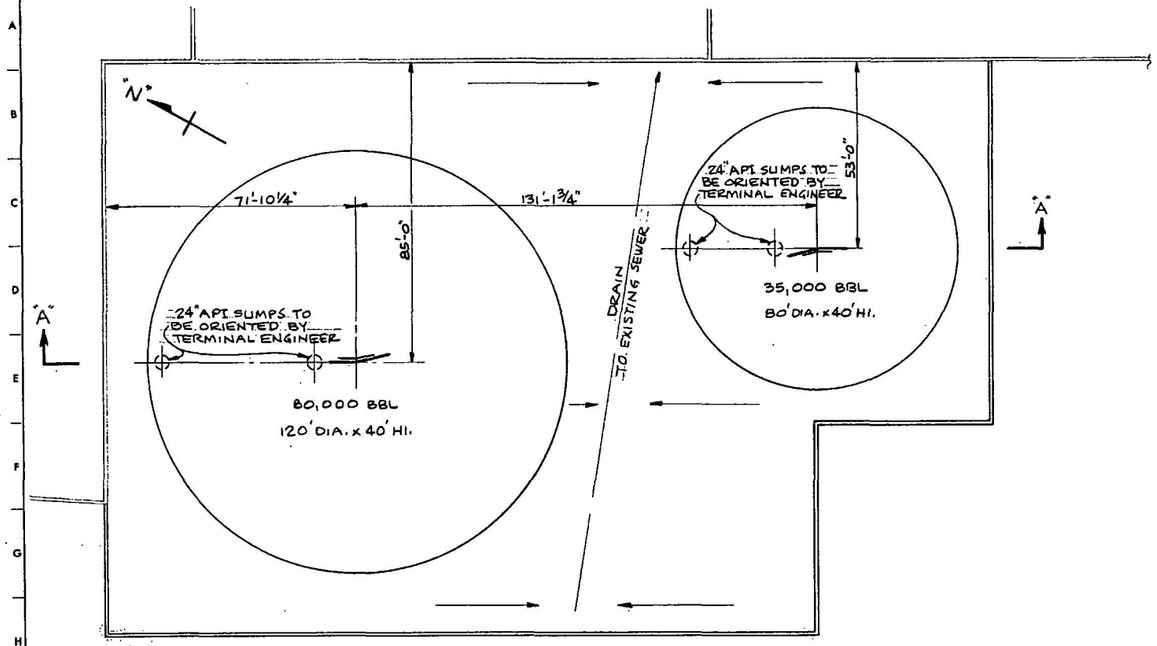

AREA PLAN
SCALE 1" = 20'-0"

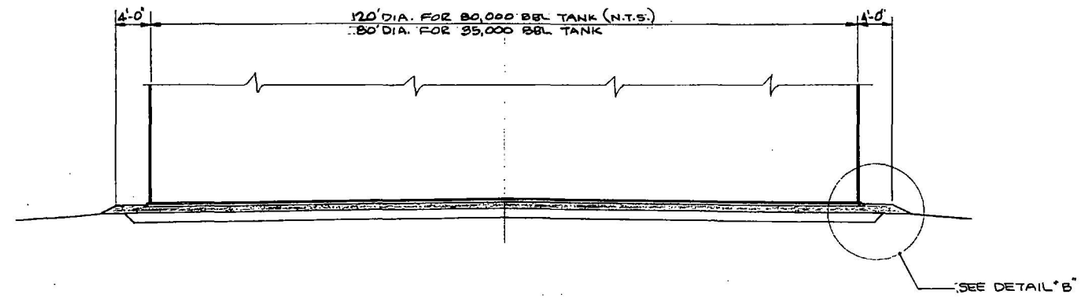

PROPOSED PROFILE OF TANK FOUNDATION
SCALE ⅛" = 1'-0"

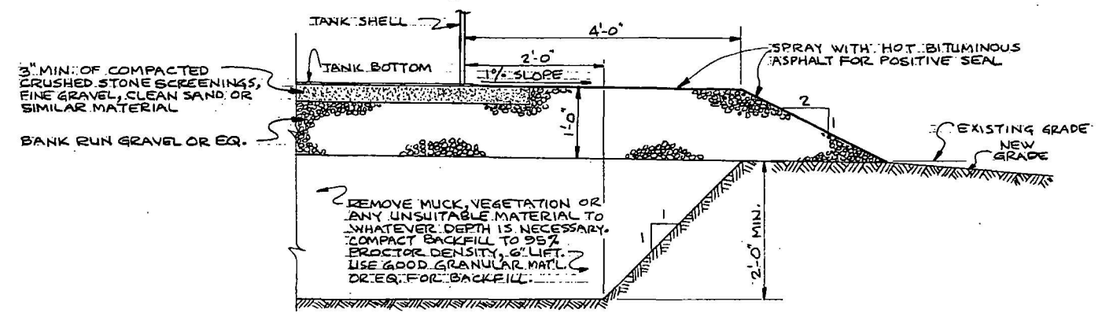

DETAIL "B"
TYPICAL SAND & GRAVEL FOUNDATION
SCALE 1" = 1'-0"

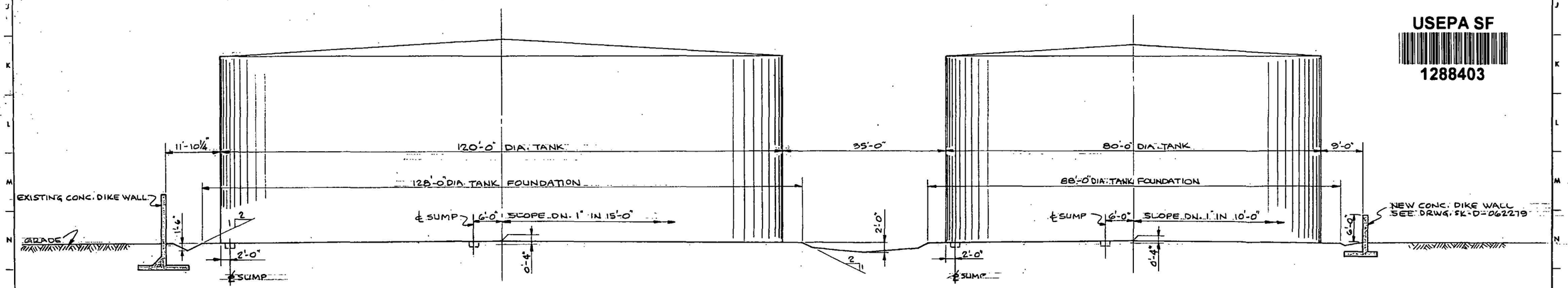

SECTION "A-A"
GRADE PROFILE
SCALE 1" = 10'-0"

USEPA SF
1288403

REV.	DATE	BY	DESCRIPTION
			REVISIONS

PROPOSED SAND & GRAVEL TANK FOUNDATIONS
FOR 120' DIA. x 40' HI & 80' DIA. x 40' HI. TANKS
PORTLAND TERMINAL

GATX TERMINALS CORPORATION
CHICAGO

DRAWN R. OLSAR
CHECKED V. S. Lomohan
APPROVED
CHIEF ENGR.
REF. DRWGS.
DWG. NO. SK-D-070279-0
DATE 7/2/79
SCALE NOTED

THIS DRAWING OR TRACING IS THE PROPERTY OF THE GATX TERMINALS CORPORATION AND MUST BE RETURNED UPON REQUEST. REPRODUCTIONS HEREOF OR TRANSMISSIONS OF THE INFORMATION HEREON MAY NOT BE MADE WITHOUT WRITTEN CONSENT. ALL PATENT RIGHTS ARE RESERVED.

PROJ. No. 068-78-4