EMCSP

6.1.4
8/01/02

DRAFT CONSTRUCTION COMPLETION REPORT

RMER EAST OVERFLOW POND REMEDIAL ACTION

SIMPLOT PLANT AREA
EASTERN MICHAUD FLATS SUPERFUND SITE

MFG, Inc.
consulting scientists and engineers

USEPA SF
1278051

DRAFT CONSTRUCTION COMPLETION REPORT

FORMER EAST OVERFLOW POND REMEDIAL ACTION

SIMPLOT PLANT AREA
EASTERN MICHAUD FLATS SUPERFUND SITE

August 2002

Prepared for:

J.R. SIMPLOT COMPANY
P.O. Box 912
1130 Highway 30
Pocatello, ID 83204

Prepared by:

MFG, INC.
consulting scientists and engineers

4900 Pearl East Circle, Suite 300W
Boulder, CO 80301
(303) 447-1823
FAX 447-1836

MFG Project No. 010121-5

TABLE OF CONTENTS

LIST OF FIGURES ii

LIST OF APPENDICES iii

1.0 INTRODUCTION 1
- 1.1 Site Description and Project History 1
- 1.2 Remedial Action Objective and Performance Standard 2
- 1.3 Report Organization 2

2.0 CONSTRUCTION SUMMARY AND SEQUENCE 4

3.0 CONSTRUCTION ACTIVITIES 5
- 3.1 Sediment Removal 5
- 3.2 Confirmation Sampling 5
- 3.3 New Impoundment Construction 6

4.0 GROUNDWATER MONITORING 7

5.0 REFERENCES 8

LIST OF FIGURES

Figure	Title
1	Site Location Map
2	General Site Plan

LIST OF APPENDICES

Appendix	Title
A	Field Sample Documentation and Laboratory Report
B	As-Built Construction Drawings for the New, Lined Impoundment (Reclaim Water Pond #2)

1.0 INTRODUCTION

This Construction Completion Report (CCR) documents the remedial actions performed for the Former East Overflow Pond at the Simplot Plant Area of the Eastern Michaud Flats (EMF) Superfund Site (the Site), located near Pocatello, Idaho. Remedial actions at the Former East Overflow Pond are a required component of the comprehensive Site remedy described in the Record of Decision (ROD; USEPA, 1998) and subsequent Consent Decree for the Simplot Plant Area portion of the Site (USEPA, 2002).

1.1 Site Description and Project History

The EMF Site is located near the City of Pocatello, Idaho (Figure 1) and includes two industrial facilities: the FMC Elemental Phosphorus Facility (which ceased operations in December 2001) and the J.R. Simplot Don Plant. The Don Plant produces phosphoric acid and a variety of liquid and solid fertilizers. FMC produced elemental phosphorus. The EPA has divided the Site into three areas: the FMC Plant Area includes the FMC facility and adjacent land owned by FMC; the Simplot Plant Area includes the Don Plant and adjacent land owned by Simplot; and the Off-Plant Area, which surrounds the FMC- and Simplot-Plant Areas.

The Simplot Don Plant covers approximately 745 acres and adjoins the eastern property boundary of the FMC facility (see Figure 2). The main portion of the plant lies approximately 500 feet southwest of the Portneuf River. Of the 745 acres, approximately 400 acres are committed to the gypsum stack. Another 185 acres are occupied by the plant and its infrastructure. A significant portion of the remaining acreage to the south and southeast of the plant consists of cliffs and rugged steep terrain. A Union Pacific Railroad right-of-way is adjacent to the northern fence line of the Don Plant and passes through the northern portion of the Simplot Plant Area, paralleling U.S. Highway 30. Access to the Don Plant is provided by I-86 and U.S. Highway 30.

The Don Plant began production of a single superphosphate fertilizer in 1944. Phosphoric acid production began in 1954. Currently, the plant produces 12 principal products, including five grades of solid fertilizers and four grades of liquid fertilizers. The principal raw materials for the process are

phosphate ore, which is transported to the facility via a slurry pipeline from the Smoky Canyon mine, sulfur, air and ammonia. The primary byproduct from the Don Plant process is gypsum (calcium sulfate), which is stacked on site.

An Administrative Order on Consent (AOC) was issued by the U.S. Environmental Protection Agency (EPA) on May 30, 1991 and entered into voluntarily by FMC and Simplot. The AOC specified requirements for implementation of a Remedial Investigation (RI) and Feasibility Study (FS) to evaluate site conditions and remedial alternatives to address any potential threats to human health and the environment. Based on the findings of these studies, EPA issued a Record of Decision (ROD; USEPA, 1998), specifying the selected remedial actions for the Site on June 8, 1998. A Consent Decree (USEPA, 2002) between EPA and Simplot, which specified the conditions for implementing the selected remedial actions in the Simplot Plant Area portion of the Site, was entered on May 9, 2002.

1.2 Remedial Action Objective and Performance Standard

Remedial actions to excavate gypsum sediments from the area of the Former East Overflow Pond and construction of a new, lined impoundment were a required work element under the Consent Decree Statement of Work (SOW). As described in the SOW, the objective of the actions was *"to reduce the potential for infiltration through potential source materials"*.

In addition, the SOW states that the *'performance of this element of the work will be evaluated by monitoring groundwater for the contaminants of concern at upgradient and down gradient locations."*

1.3 Report Organization

This CCR summarizes the remedial actions performed for the Former East Overflow Pond work element. Section 2 presents the construction chronology. Section 3, presents the details of the construction activities, including results of confirmation sampling performed to verify removal of the gypsum sediments from the pond area and details pertaining to construction of the new, lined impoundment in the excavated area. Section 4 summarizes the groundwater monitoring activities to be

conducted in evaluating the performance of the remedial actions. Field and laboratory data reports associated with sediment removal are contained in Appendix A and as-built construction drawings for the project are included as Appendix B.

2.0 CONSTRUCTION SUMMARY AND SEQUENCE

Remedial actions were implemented at the Former East Overflow Pond in the second half of 1997. The work activities consisted of excavating sediments from the bottom of the Former East Overflow Pond and over-excavating the underlying material to create the foundation for a new, lined impoundment. The excavated materials were relocated to the gypsum stack and confirmatory sampling was performed to verify that the sediments had been removed prior to impoundment construction. Once these actions were completed, fill material was imported from an on-site borrow area, compacted and shaped to form the base for the lined impoundment. A double-lined impoundment with a leak detection system was then constructed on the prepared subgrade.

3.0 CONSTRUCTION ACTIVITIES

The following sections detail the activities conducted to complete the Former East Overflow Pond remedial actions.

3.1 Sediment Removal

A tracked excavator was used to remove the materials from the base of the Former East Overflow Pond. During excavation a visually distinct surficial layer of light colored material, typically one to three feet thick, and the underlying material were removed. The excavated materials were loaded into tandem dump trucks, transported to the southwest corner of the lower gypsum stack and placed on the gypsum stack (see as-built drawing C-214 in Appendix B for location). Following removal of the visible pond sediments, the excavation was advanced as necessary to achieve the excavation depth required for the new pond construction.

3.2 Confirmation Sampling

Four samples were collected from the base of the excavation to verify that the sediments had been removed. Two samples were collected from the east end of the excavation, one sample was collected from near the center of the excavation and one sample was collected from the north side of the excavation. A sketch of the sampling point locations is included in Appendix A.

The samples were analyzed for arsenic (Method 6010A) by Mountain States Analytical, Inc. of Salt Lake City, Utah. Arsenic was not detected in any of the four samples above the limit of quantitation of 15 mg/Kg. Copies of the field documentation and laboratory report for the samples are included as Appendix A.

3.3 New Impoundment Construction

Following excavation and confirmation sampling, replacement fill was imported, compacted and shaped to provide a suitable subgrade for construction of the new, lined impoundment. The impoundment was constructed with a double liner system with leak detection between the liners. As-built construction drawings of the new impoundment system are attached as Appendix B.

4.0 GROUNDWATER MONITORING

Groundwater monitoring will be performed at locations upgradient and down gradient of the Former East Overflow Pond to evaluate the performance of the remedial actions. Beginning with the start-up of the groundwater extraction system for gypsum stack affected groundwater, groundwater samples will be collected quarterly and will continue for a period of five years. Well 332 will be monitored to characterize the upgradient groundwater and well 318 will be monitored to characterize the down gradient groundwater (see Figure 2).

During use, the Former East Overflow Pond was identified as a source of arsenic and sulfate to groundwater. Therefore, the groundwater samples from wells 332 and 318 will be analyzed for these constituents. The sample will also be sampled for field parameters (temperature, pH, conductivity and turbidity) and other chemical constituents that may also be useful in evaluating performance of the groundwater extraction system.

Because constituent concentrations in groundwater underlying the Former East Overflow Pond are expected to change in response to the start-up of the groundwater extraction system, data from the extraction start-up phase will not be used in evaluating performance. Following the start-up period, constituent concentrations in groundwater immediately down gradient of the pond will be compared with constituent concentrations immediately upgradient of the pond using an analysis of variance method (in particular, the one-way parametric analysis of variance). Further details of the statistical methods that will be used in evaluating the groundwater data are described in the Groundwater Monitoring Remedial Design Report (Simplot, 2002a).

At the end of the five year monitoring period, the groundwater data will be evaluated to assess performance of the remedial actions. If the data demonstrate that the pond has had no effect on groundwater quality, the performance standard for the remedial actions will be met and the monitoring will be discontinued. If the performance standard is not met, a Corrective Action Plan will be prepared and submitted by Simplot, which will provide details of any corrective actions proposed for the pond and on-going monitoring. The Corrective Action Plan will be implemented on approval by EPA.

5.0 REFERENCES

J.R. Simplot Company (Simplot), 2002a. *Draft Prefinal Remedial Design Report, Groundwater Monitoring, Simplot Plant Area Eastern Michaud Flats Superfund Site.* Prepared by MFG, Inc.

U.S. Environmental Protection Agency (EPA). 1998. *Record of Decision for the Eastern Michaud Flats Superfund Site.* June 8, 1998.

U.S. Environmental Protection Agency (EPA), 2002. *Consent Decree for Remedial Design/Remedial Action for the Simplot Plant Area at the Eastern Michaud Flats Superfund Site.* U.S. EPA Region 10. May 9, 2002.

FIGURES

FIGURES

4/02 BY: RHF

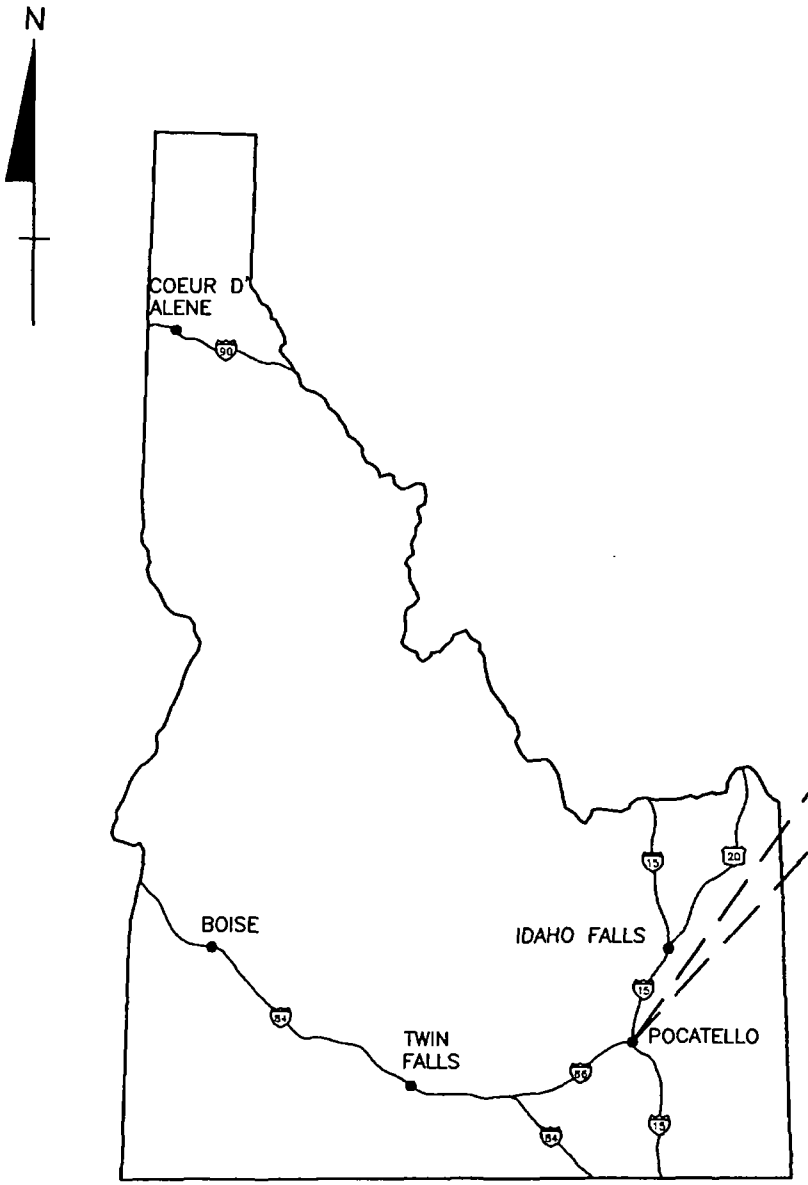

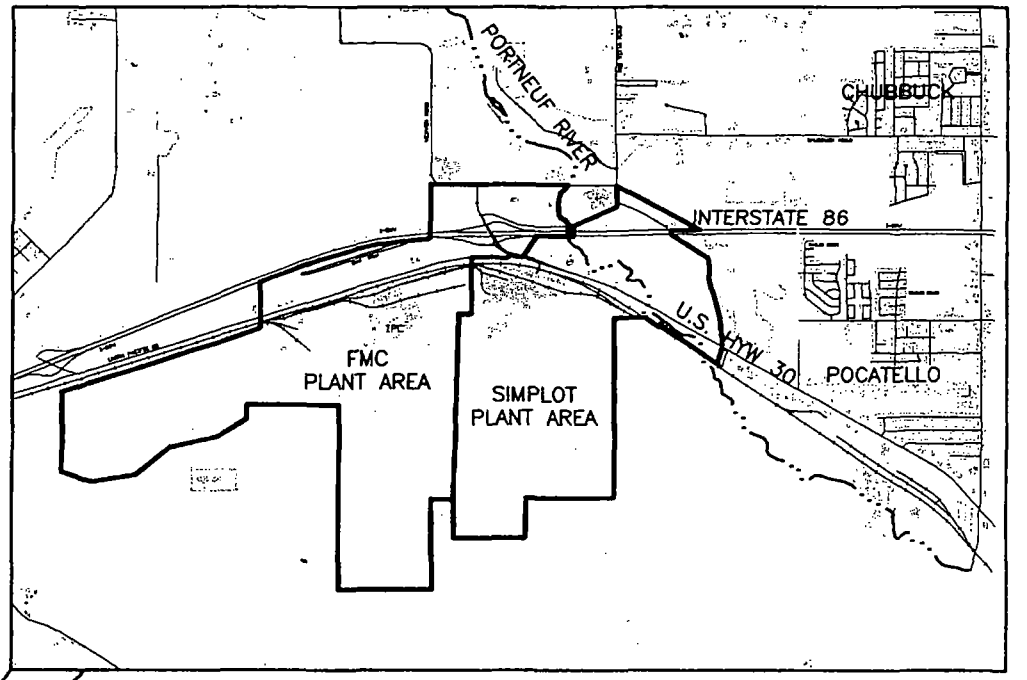

EASTERN MICHAUD FLATS
SUPERFUND SITE VICINITY

SIMPLOT PLANT AREA
EASTERN MICHAUD FLATS
SUPERFUND SITE
POCATELLO, IDAHO

EOP CONSTRUCTION COMPLETION REPORT

FIGURE 1

SITE LOCATION MAP

PROJECT: 010121.5	DATE: JULY 2002	
REV:	BY: RHF	CHECKED: AC

MFG, Inc.
consulting scientists and engineers

RFIELD D:\0121\0121-34.dwg ffff 7/30/02 4:07 pm
Xrefs: (none)
Images: (none)
Plot time: 4:07 pm
Plot date: 7/30/02

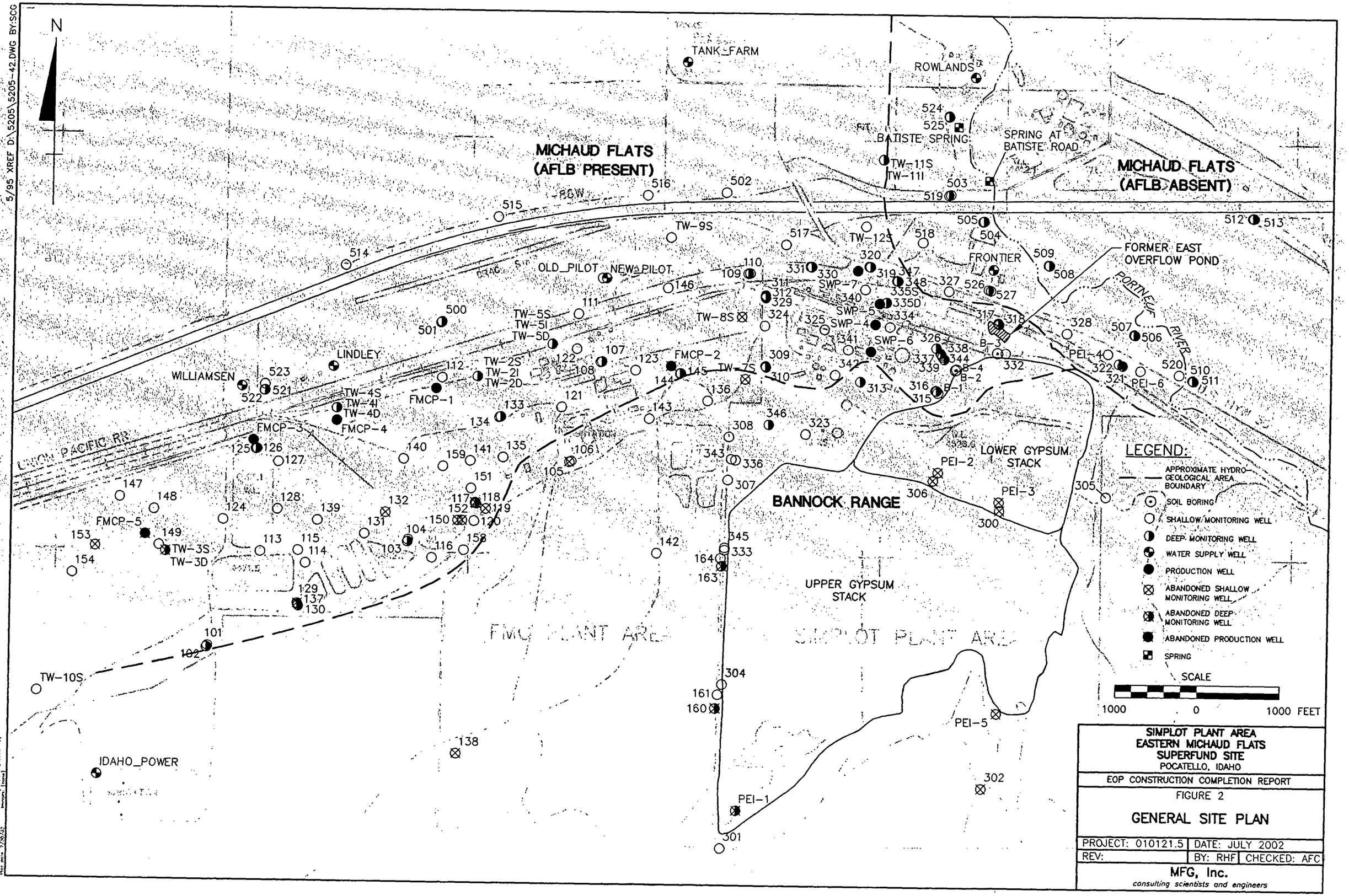

SIMPLOT PLANT AREA
EASTERN MICHAUD FLATS
SUPERFUND SITE
POCATELLO, IDAHO

EOP CONSTRUCTION COMPLETION REPORT

FIGURE 2

GENERAL SITE PLAN

PROJECT: 010121.5	DATE: JULY 2002	
REV:	BY: RHF	CHECKED: AFC

MFG, Inc.
consulting scientists and engineers

5/95 XREF D:\5205\5205-42.DWG BY:SCG

APPENDICES

APPENDIX A

APPENDIX A

Field Sample Documentation and Laboratory Report

Field Notes
from sample logbook.

7/31/97	N/A - Samples pulled for hold request	soils	Soil samples pulled at the request of Paul Aschenbrenner (Project Engineer). Representative of soils left in place prior to building new, lined pond in the old East overflow Pond bed.	NA	fCC 810
Sample Team: John Cunningham - sampler; Paul Otto - scribe; Paul Aschenbrenner - Engineer					
Equipment: 4 @ stainless steel scoopulas; 4 @ 250 ml glass bottles w/ teflon lined lids; red security tape					
97-212-01 15:35	—	Grab - Sandy/Gravel	Engineer selected site 6" below bottom (new pond)	—	fCC
97-212-02 15:40	—	Grab - Hard Clay w/ some gypsum	Engineer Selected site 0" below bottom	—	fCC
97-212-03 15:45	—	Grab - Hard Clay w/ gypsum	Engineer Selected site 0" below bottom	—	fCC
97-212-04 15:50	—	Grab - Hard Clay w/ some gypsum	Random - Grade	Continued on Page	fCC

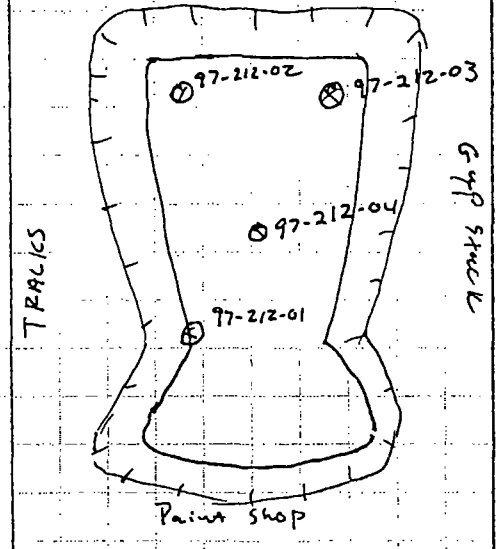

Read and Understood By

Signed | Date | Signed | Date

Mountain States Analytical, Inc.

October 15, 1997

Mr. John Cunningham
J.R. Simplot Company
P.O. Box 912
1150 Highway 30 West
Pocatello, ID 83201

Reference:
Project: Soil Samples
MSAI Group: 18112

Dear Mr. Cunningham:

Enclosed are the analytical results for your project referenced above. The following samples are included in the report.

97-212-01 97-212-02 97-212-03
97-212-04

All holding times were met for the tests performed on these samples.

Thank you for selecting Mountain States Analytical, Inc. to serve as your analytical laboratory on this project. If you have any questions concerning these results, please feel free to contact me at any time.

We look forward to working with you on future projects.

With Regards,

Rolf E. Larsen
Project Manager

Analytical Report

Mountain States Analytical, Inc.
The Quality Solution

J.R. Simplot Company
P.O. Box 912
1150 Highway 30 West
Pocatello, ID 83201

Attn: Mr. John Cunningham
Project: Soil Samples

MSAI Sample: 69154
MSAI Group: 18112
Date Reported: 10/15/97

Discard Date: 11/14/97
Date Submitted: 10/01/97
Date Sampled: 07/31/97
Collected by: JC
Purchase Order: 800005
Project No.:

Sample ID: 97-212-01
Matrix: Soil

Test	Analysis	Results as Received	Units	Limit of Quantitation
0[redacted]0I	Flame/ICP Prep, sw, 3050A Method: SW-846 3050A	Batch: s 282		
7[redacted]5	Arsenic by ICP, sw, 6010A Method: SW-846 6010A	ND	mg/kg	15

ND - Not detected at the limit of quantitation

This report consists of the following items: A cover letter, a signed analytical report for each sample specified on the cover letter, and if applicable, an inorganic quality control summary. Organic sample reports contain footnotes which describe any quality control anomalies which may have occurred.

Respectfully Submitted,
Reviewed and Approved by:

R E Larsen

Rolf E. Larsen
Project Manager

1645 West 2200 South, Salt Lake City, Utah 84119 1-801-973-0050 1-800-973-6724 (MSAI) FAX 1-801-972-6278

MEMBER ACIL

10 Years of Quality Service

Analytical Report

Mountain States Analytical, Inc.
The Quality Solution

J.R. Simplot Company
P.O. Box 912
1150 Highway 30 West
Pocatello, ID 83201

Attn: Mr. John Cunningham
Project: Soil Samples

MSAI Sample: 69155
MSAI Group: 18112
Date Reported: 10/15/97

Discard Date: 11/14/97
Date Submitted: 10/01/97
Date Sampled: 07/31/97
Collected by: JC
Purchase Order: 800005
Project No.:

Sample ID: 97-212-02
Matrix: Soil

Test	Analysis	Results as Received	Units	Limit of Quantitation
10I	Flame/ICP Prep, sw, 3050A Method: SW-846 3050A	Batch: s 282		
15	Arsenic by ICP, sw, 6010A Method: SW-846 6010A	ND	mg/kg	15

ND - Not detected at the limit of quantitation

This report consists of the following items: A cover letter, a signed analytical report for each sample specified on the cover letter, and if applicable, an inorganic quality control summary. Organic sample reports contain footnotes which describe any quality control anomalies which may have occurred.

Respectfully Submitted,
Reviewed and Approved by:

R Elsosen

Rolf E. Larsen
Project Manager

1645 West 2200 South, Salt Lake City, Utah 84119 1-801-973-0050 1-800-973-6724 (MSAI) FAX 1-801-972-6278

MEMBER ACIL

10 Years of Quality Service

Analytical Report

Mountain States Analytical, Inc.
The Quality Solution

J.R. Simplot Company
P.O. Box 912
1150 Highway 30 West
Pocatello, ID 83201

Attn: Mr. John Cunningham
Project: Soil Samples

MSAI Sample: 69156
MSAI Group: 18112
Date Reported: 10/15/97

Discard Date: 11/14/97
Date Submitted: 10/01/97
Date Sampled: 07/31/97
Collected by: JC
Purchase Order: 800005
Project No.:

Sample ID: 97-212-03
Matrix: Soil

Test	Analysis	Results as Received	Units	Limit of Quantitation
0[illegible]01	Flame/ICP Prep, sw, 3050A Method: SW-846 3050A	Batch: s 282		
7[illegible]5	Arsenic by ICP, sw, 6010A Method: SW-846 6010A	ND	mg/kg	15

ND - Not detected at the limit of quantitation

This report consists of the following items: A cover letter, a signed analytical report for each sample specified on the cover letter, and if applicable, an inorganic quality control summary Organic sample reports contain footnotes which describe any quality control anomalies which may have occurred.

Respectfully Submitted,
Reviewed and Approved by:

Rolf E. Larsen
Project Manager

1645 West 2200 South, Salt Lake City, Utah 84119 1-801-973-0050 1-800-973-6724 (MSAI) FAX 1-801-972-6278

MEMBER ACIL

10 Years of Quality Service

Analytical Report

Mountain States Analytical, Inc.
The Quality Solution

J.R. Simplot Company
P.O. Box 912
1150 Highway 30 West
Pocatello, ID 83201

Attn: Mr. John Cunningham
Project: Soil Samples

Sample ID: 97-212-04
Matrix: Soil

MSAI Sample: 69157
MSAI Group: 18112
Date Reported: 10/15/97

Discard Date: 11/14/97
Date Submitted: 10/01/97
Date Sampled: 07/31/97
Collected by: JC
Purchase Order: 800005
Project No.:

Test	Analysis	Results as Received	Units	Limit of Quantitation
90I	Flame/ICP Prep, sw, 3050A Method: SW-846 3050A	Batch: 5 282		
45	Arsenic by ICP, sw, 6010A Method: SW-846 6010A	ND	mg/kg	5

ND - Not detected at the limit of quantitation

This report consists of the following items: A cover letter, a signed analytical report for each sample specified on the cover letter, and if applicable, an inorganic quality control summary. Organic sample reports contain footnotes which describe any quality control anomalies which may have occurred.

Respectfully Submitted,
Reviewed and Approved by:

Rolf E. Larsen
Project Manager

ENVIRONMENTAL SAMPLE CHAIN OF CUSTODY RECORD

P.O.#: 800005

Sampler's Signature: [signature] Date: 9-29-97

LOGBOOK #:

PROJECT/AREA: Superfund – East Overflow Pond

SAMPLE NUMBER	SAMPLE DATE	TIME	SAMPLE LOCATION	NUMBER AND TYPE OF CONTAINERS	METALS	ANIONS	VOA'S	SEMI VOA'S	PCB'S	CYANIDE	ASBESTOS	Total Arsenic	PH	REFRIGERATED	LAB DISPOSAL	PRESERVATIVE	COMMENTS/WCP#
97-212-01	7/31/97	15:35	EOP 6"	1-8oz Gl								X					Grab - Soil
97-212-02	7/31/97	15:40	EOP 6"	1-8oz Gl								X					Grab - Soil
97-212-03	7/31/97	15:45	EOP 6"	1-8oz Gl								X					Grab - Soil
97-212-04	7/31/97	15:50	EOP Grade	1-8oz Gl								X					Grab - Soil
																	* Please archive
																	samples until
																	notified.

Relinquished By Sampler: [signature] 9-29-97 / 9:15 DATE/TIME	Received By: [signature] 9-29-97 9:20 DATE/TIME
Relinquished By: [signature] 9-29-97 11:00 DATE/TIME	Received By: UPS 9-29-97 11:05 DATE/TIME
Relinquished By: DATE/TIME	Received By: Pam Olsen MSAI 10-01-97 1520 DATE/TIME
Relinquished By: DATE/TIME	Received By: DATE/TIME
Relinquished By: DATE/TIME	Received By: DATE/TIME

Contact:

RCRA ENVIRONMENTAL SPECIALIST
J.R. SIMPLOT COMPANY
(208) 234-5365
P.O. Box 912
POCATELLO, ID 83204

Distribution: White Copy – Sampler
Yellow Copy – Environmental Support

APPENDIX B

APPENDIX B

As-built Construction Drawings for the New, Lined Impoundment

(Reclaim Water Pond #2)

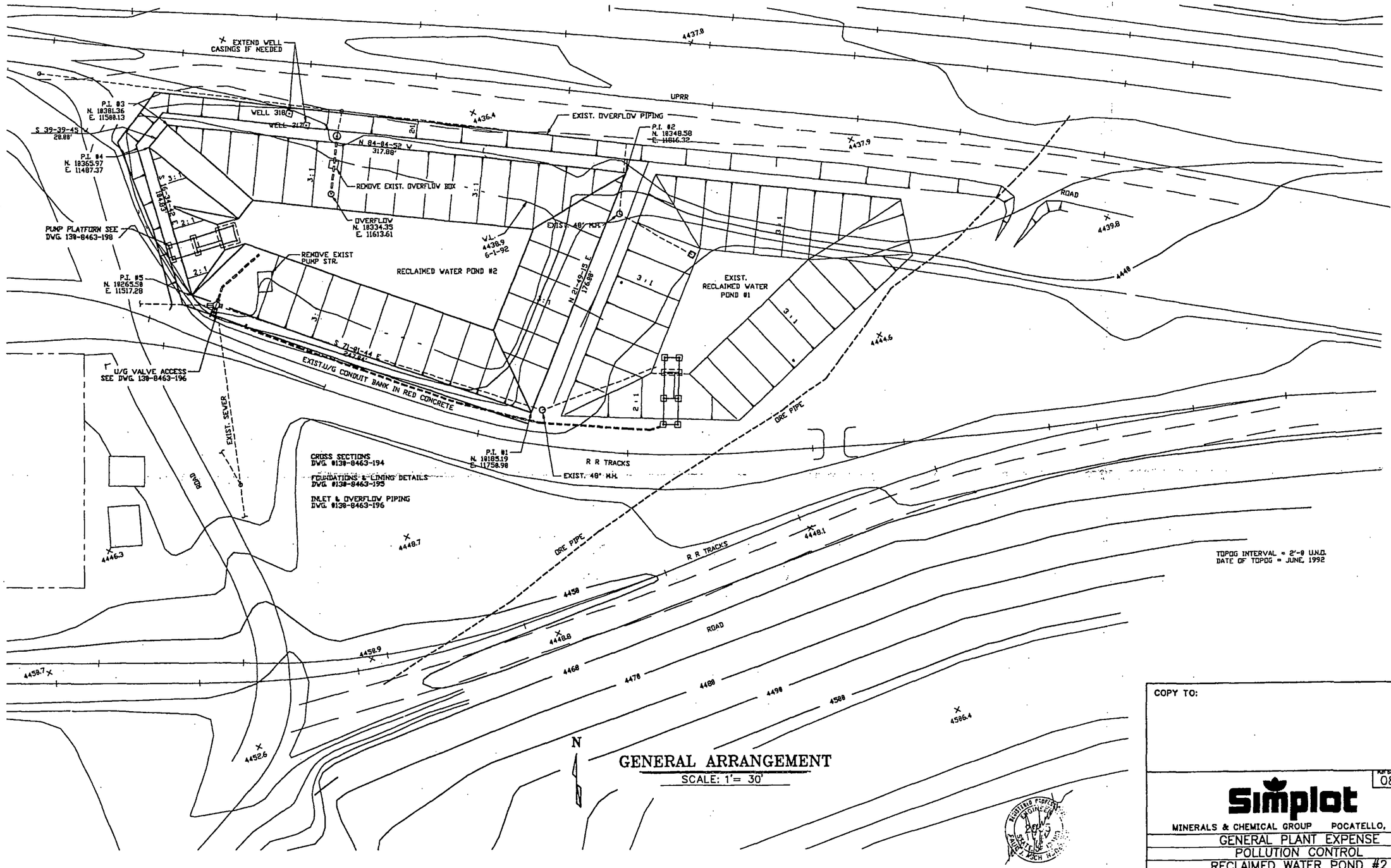

GENERAL ARRANGEMENT

SCALE: 1'= 30'

COPY TO:

PLOT DATE 08/11/98

Simplot

MINERALS & CHEMICAL GROUP POCATELLO, IDAHO

GENERAL PLANT EXPENSE
POLLUTION CONTROL
RECLAIMED WATER POND #2
GENERAL ARRANGEMENT
PLAN

CAD DWG. #: 01IK8463

JRS-8463-A-193

SCALE: NOTED

REVISION 1

REFERENCES NO.	DESCRIPTION

REVISIONS NO.	REVISED BY	DATE	DESCRIPTION
1	P. ASCHENBRENNER	08/10/98	AS BUILT

NO.	REVISED BY	DATE	DESCRIPTION

NO.	REVISED BY	DATE	DESCRIPTION

DRAWN BY: D COVERT	09/23/1993
DESIGNED BY: D. COVERT	
CHECKED BY:	
APPV'D. BY:	

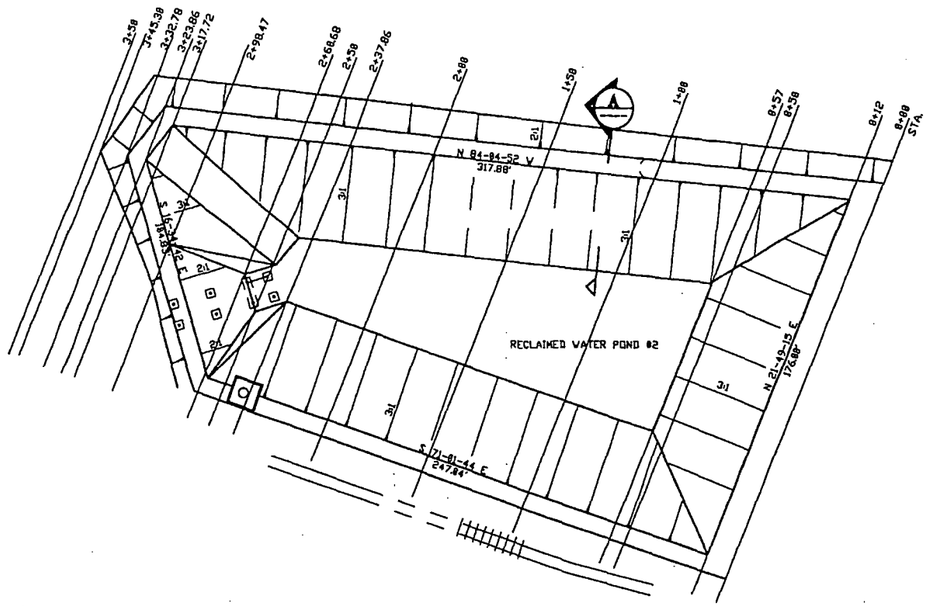

N

CROSS SECTION LOCATION PLAN

SCALE: 3/16" = 1'-0

ALL X-SEC'S LOOKING WEST

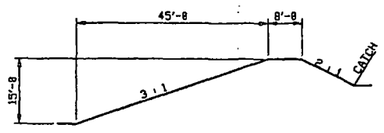

SECTION A

SCALE:

TYP. X-SECTION

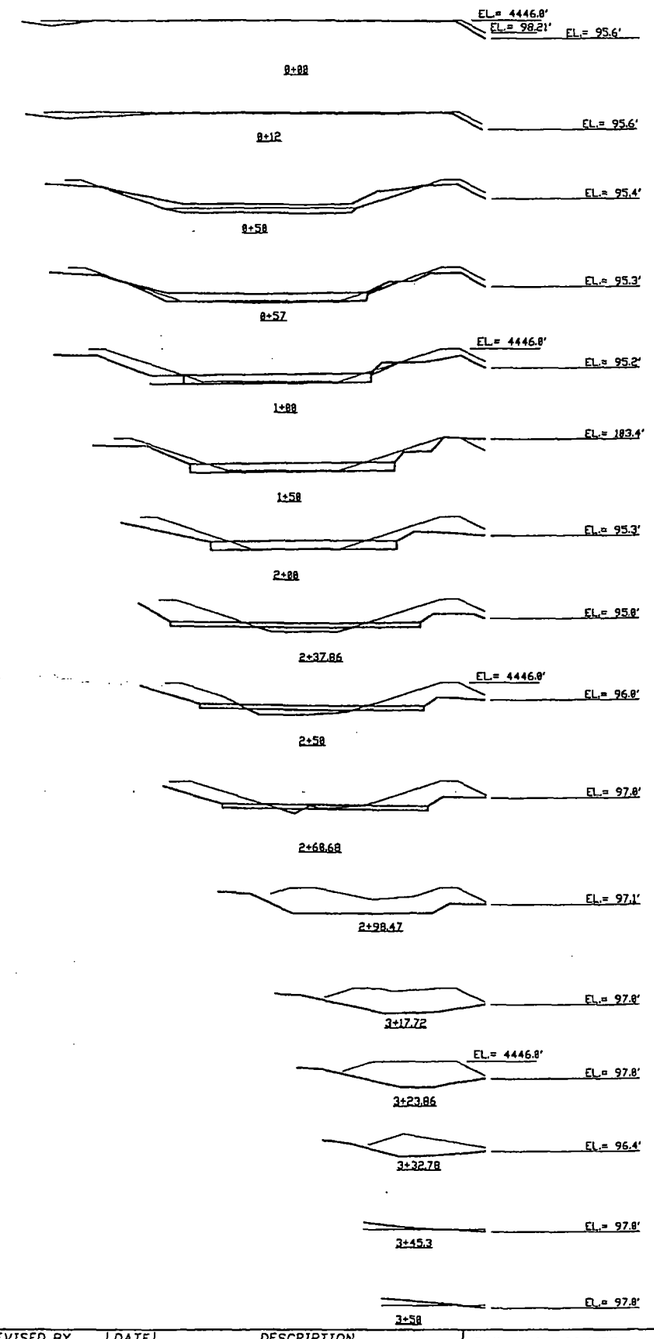

COPY TO:

AS BUILT 08/11/98

Simplot

MINERALS & CHEMICAL GROUP POCATELLO, IDAHO

GENERAL PLANT EXPENSE
POLLUTION CONTROL
RECLAIMED WATER POND #2
POND CROSS SECTIONS

REFERENCES NO.	DESCRIPTION

REVISIONS NO.	REVISED BY	DATE	DESCRIPTION	NO.	REVISED BY	DATE	DESCRIPTION
1	P. ASCHENBRENNER	08/18/98	AS BUILT				

DRAWN BY: D COVERT	09/23/1993
DESIGNED BY: D. COVERT	
CHECKED BY:	
APPV'D. BY:	

CAD DWG. #: 01BC8463

JRS-8463-A-194

SCALE: NOTED

REVISION 1

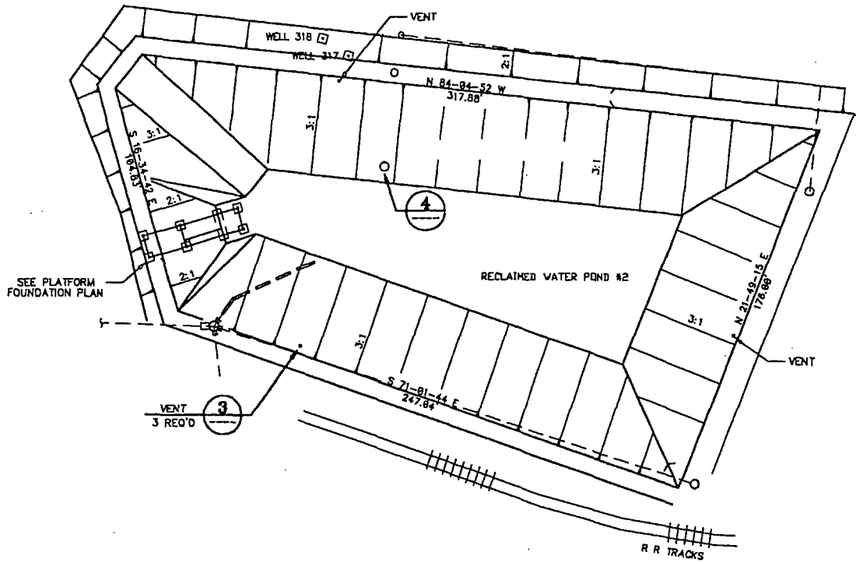

PLAN VIEW

SCALE: NONE

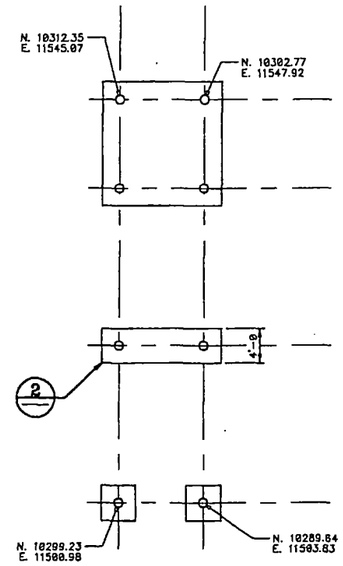

PLATFORM FOUNDATION PLAN

SCALE:

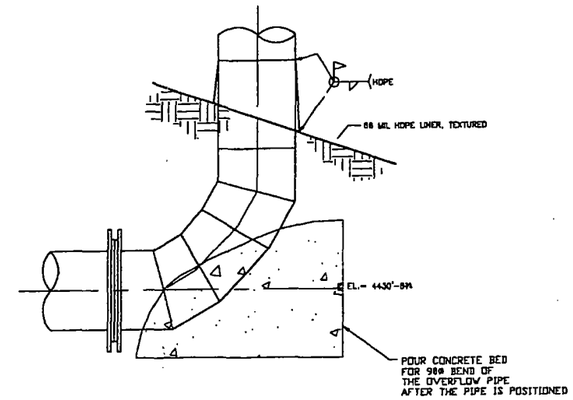

DETAIL 4

SCALE: 3/4" = 1'-0"

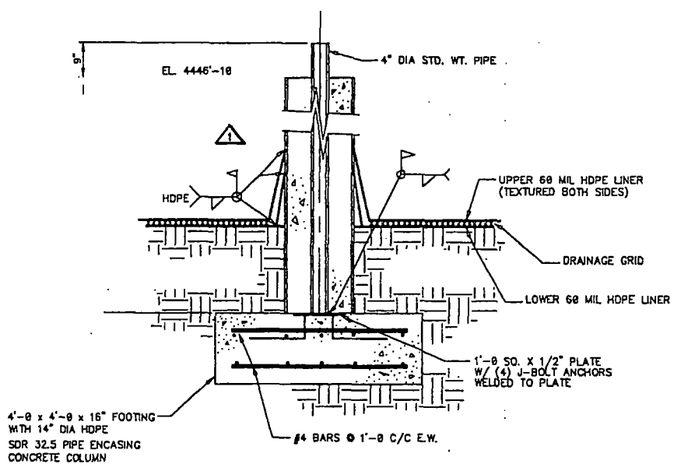

DETAIL 2

SCALE: 3/4"= 1'-0

TYP. PLATFORM FOUNDATION

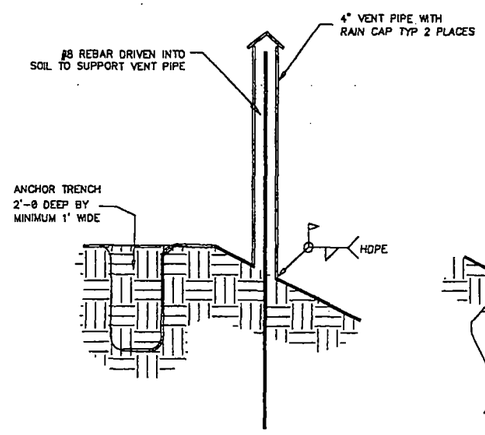

DETAIL 3

SCALE: 3/4"= 1'-0

VENT 3 REQ'D

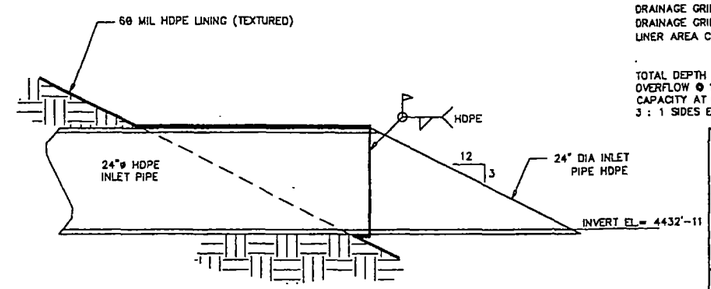

DETAIL 1

SCALE: 3/4"= 1'-0

INLET PIPE

PENETRATION SCHEDULE

A COLUMN FOR PUMP PLATFORM
6 EACH HDPE 14" OD. DET. 2
B INLET PIPE 24" DIA. HDPE, DET. 1
C VENT PIPES 3 EA. 4" DIA
SUPPLIED BY LINER CO. DET. 3
D OVERFLOW STAND PIPE 24"ø HDPE, DET. 4

TOTAL TOP LINER AREA = 47644 SQ FT, 60 MIL HDPE (TEXTURED BOTH SIDES)
TOTAL LOWER LINER AREA = 47644 SQ FT, 60 MIL HDPE OR LDPE (TEXTURED ONE OR BOTH SIDES)
DRAINAGE GRID AREA = 42357 SQ FT
DRAINAGE GRID SPOT FUSION WELDED TO LOWER LINER ON 8'-0 CENTERS, 2" MINIMUM LENGTHS
LINER AREA CALCULATIONS WITHOUT RESPECT TO DROP

TOTAL DEPTH 15'-0
OVERFLOW @ 11 FT.
CAPACITY AT OVERFLOW ELEVATION = 1.68 MILLION GAL.
3 : 1 SIDES EXCEPT NEAR PUMP STR. & BACKSLOPES= 2 : 1

COPY TO:

REVISED 08/11/98

Simplot

MINERALS & CHEMICAL GROUP POCATELLO, IDAHO

GENERAL PLANT EXPENSE
POLLUTION CONTROL
RECLAIMED WATER POND #2
POND FOUNDATIONS & LINING
PLAN & DETAILS

REFERENCES NO.	DESCRIPTION

REVISIONS NO.	REVISED BY	DATE	DESCRIPTION	NO.	REVISED BY	DATE	DESCRIPTION
1	K. CORBRIDGE	04/22/97	ADDED TOP LINER AND DRAINAGE GRID				
2	P. ASCHENBRENNER	08/18/98	AS BUILT				

DRAWN BY: D COVERT	09/23/1993
DESIGNED BY: D. COVERT	
CHECKED BY:	
APPV'D. BY:	

CAD DWG. #: 01JB463

JRS-8463-C-195

SCALE: NOTED

REVISION 2

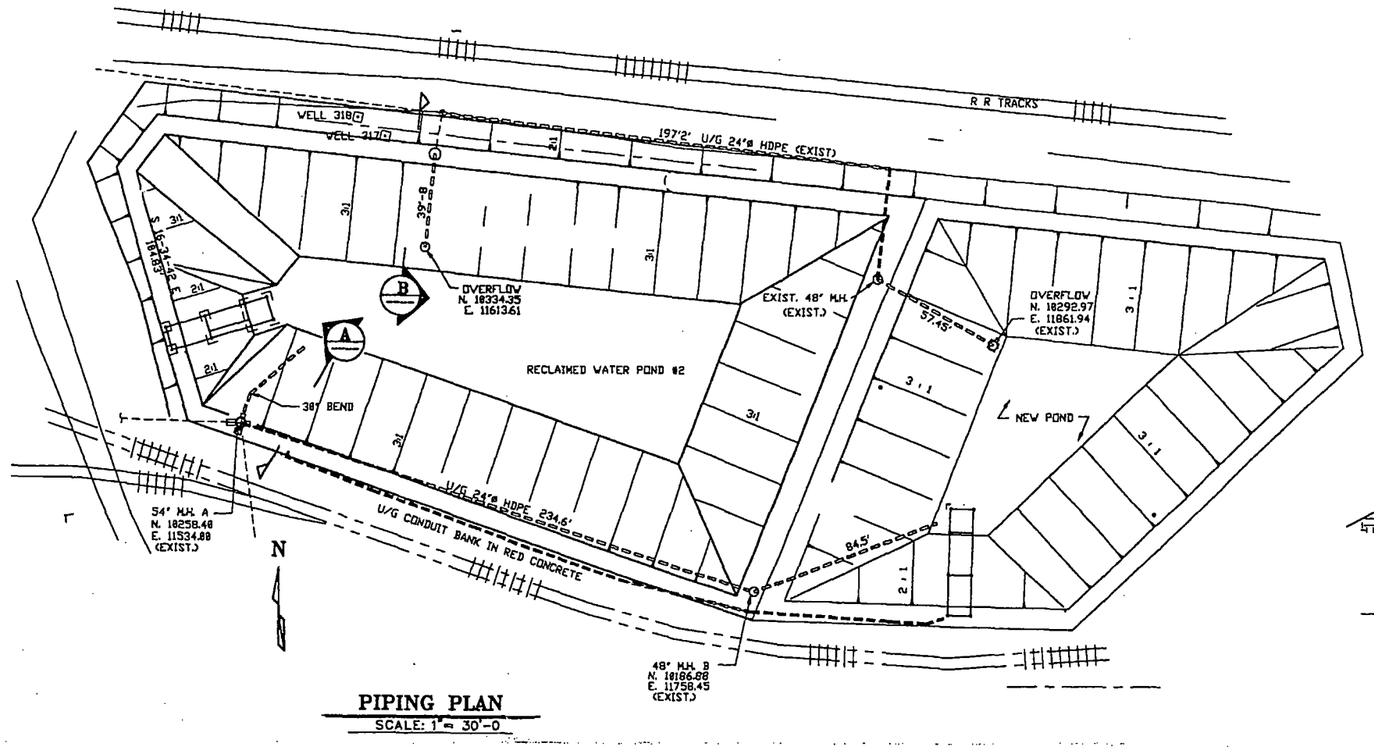

PIPING PLAN

SCALE: 1" = 30'-0

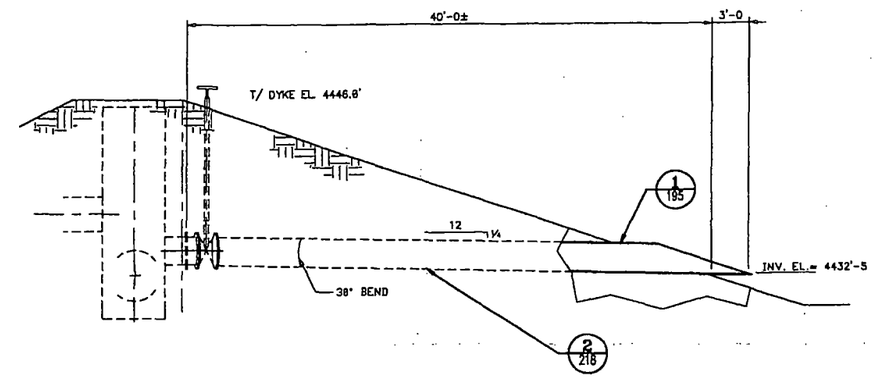

SECTION A

SCALE:

INLET

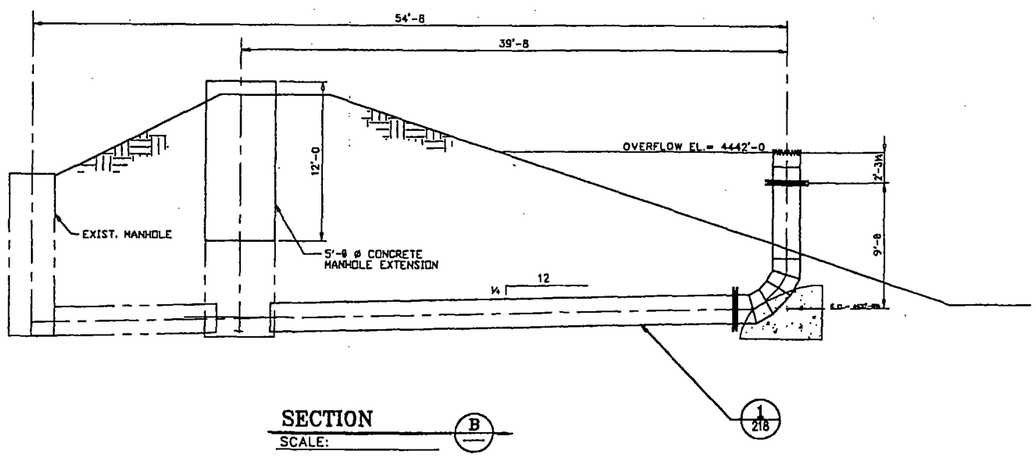

SECTION B

SCALE:

OVERFLOW

COPY TO:

Simplot

MINERALS & CHEMICAL GROUP POCATELLO, IDAHO

08/11/98

GENERAL PLANT EXPENSE
POLLUTION CONTROL
RECLAIMED WATER POND #2
PIPING
PLAN & DETAILS

CAD DWG. # 01BF8463

JRS-8463-P-196

SCALE: NOTED

REVISION 1

REFERENCES NO.	DESCRIPTION

REVISIONS NO.	REVISED BY	DATE	DESCRIPTION	NO.	REVISED BY	DATE	DESCRIPTION
1	P. ASCHENBRENNER	08/18/98	AS BUILT				

DRAWN BY: D COVERT	09/23/1993
DESIGNED BY: D. COVERT	
CHECKED BY:	
APPV'D. BY:	

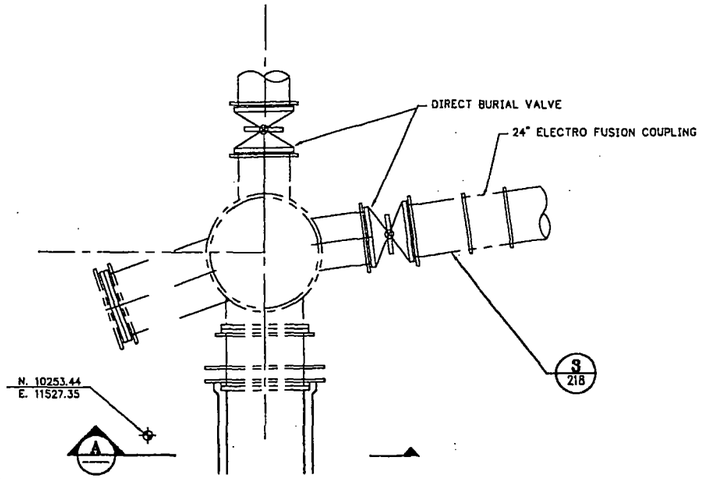

PLAN VIEW
SCALE: 3/8" = 1'-0

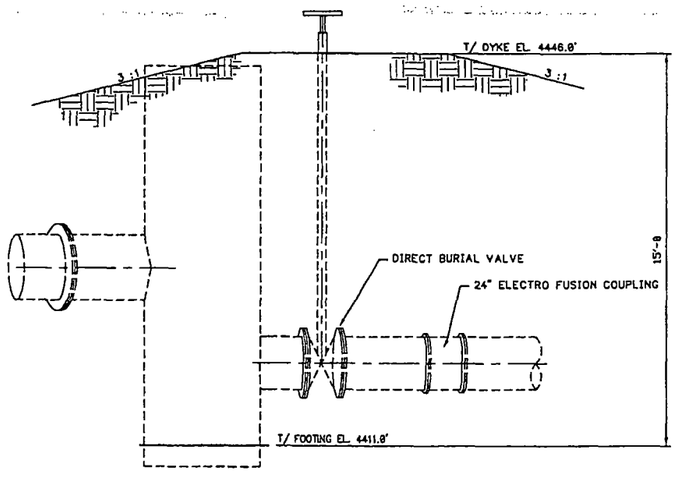

VIEW A
SCALE: 3/8" = 1'-0

COPY TO:

08/11/98

Simplot
MINERALS & CHEMICAL GROUP POCATELLO, IDAHO

GENERAL PLANT EXPENSE
POLLUTION CONTROL
RECLAIMED WATER POND #2
VALVE ACCESS STRUCTURE
PLAN & DETAILS

CAD DWG. #: 01UB463

JRS-8463-S-197

SCALE: NOTED

REVISION 1

REFERENCES NO.	DESCRIPTION

REVISIONS NO.	REVISED BY	DATE	DESCRIPTION	NO.	REVISED BY	DATE	DESCRIPTION
1	P. ASCHENBRENNER	08/10/98	AS BUILT				

DRAWN BY: D COVERT	10/13/1993
DESIGNED BY: D. COVERT	
CHECKED BY:	
APPV'D. BY:	

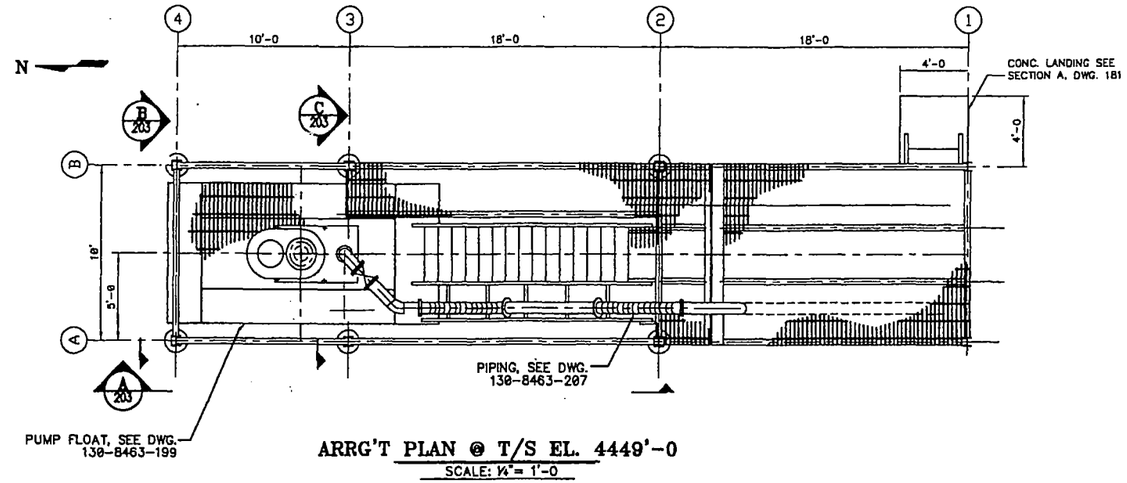

ARRG'T PLAN @ T/S EL. 4449'-0

SCALE: ¼" = 1'-0

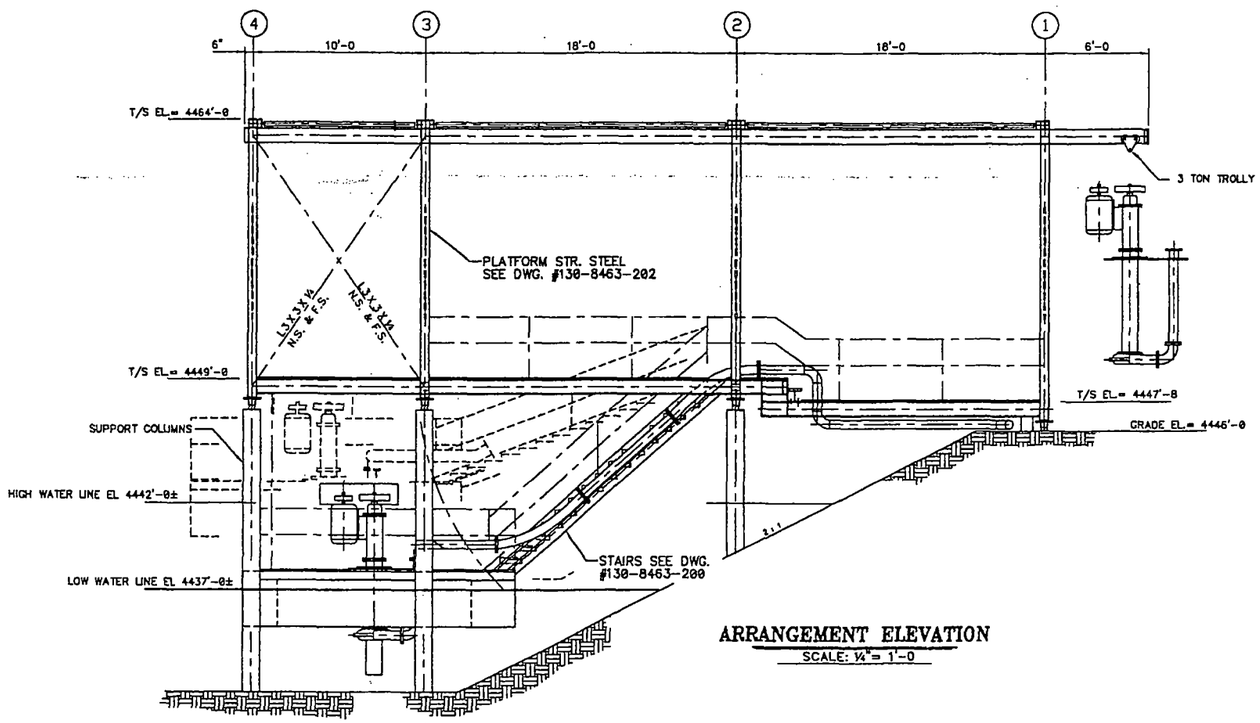

ARRANGEMENT ELEVATION

SCALE: ¼" = 1'-0

COPY TO:

REV DATE 08/11/98

Simplot

MINERALS & CHEMICAL GROUP POCATELLO, IDAHO

GENERAL PLANT EXPENSE
POLLUTION CONTROL
RECLAIMED WATER POND #2
PUMP PLATFORM
GENERAL ARRANGEMENT

CAD DWG. #: 01BEB463

JRS-8463-S-198

SCALE: NOTED

REVISION 1

REFERENCES NO.	DESCRIPTION

REVISIONS NO.	REVISED BY	DATE	DESCRIPTION	NO.	REVISED BY	DATE	DESCRIPTION
1	P. ASCHENBRENNER	08/10/98	AS BUILT				

DRAWN BY: D COVERT	10/15/1993
DESIGNED BY: D. COVERT	10/01/1994
CHECKED BY:	
APPV'D. BY:	

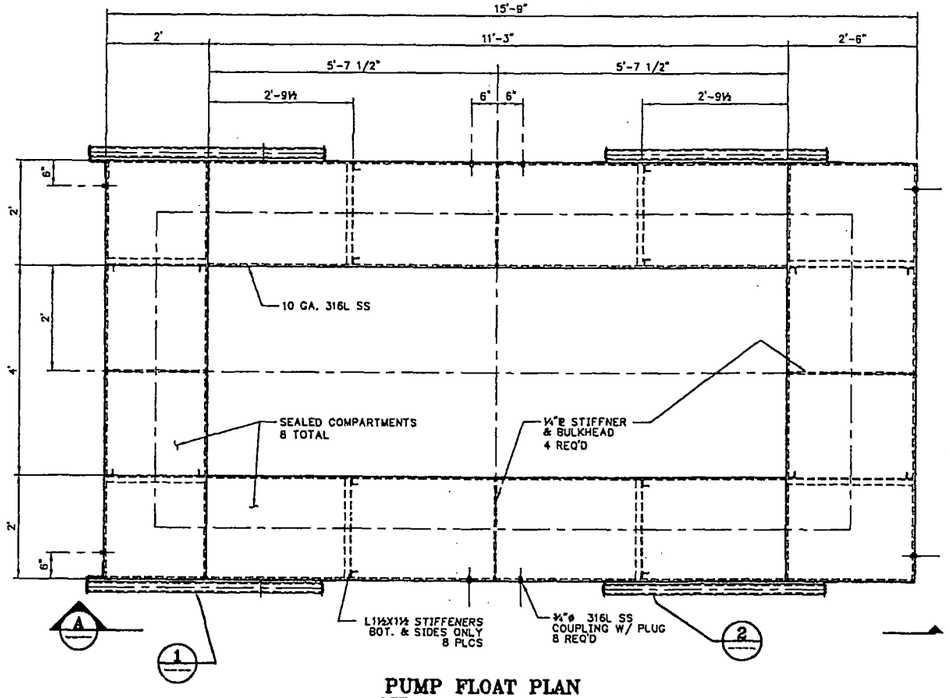

PUMP FLOAT PLAN

SCALE: ¾" = 1'-0

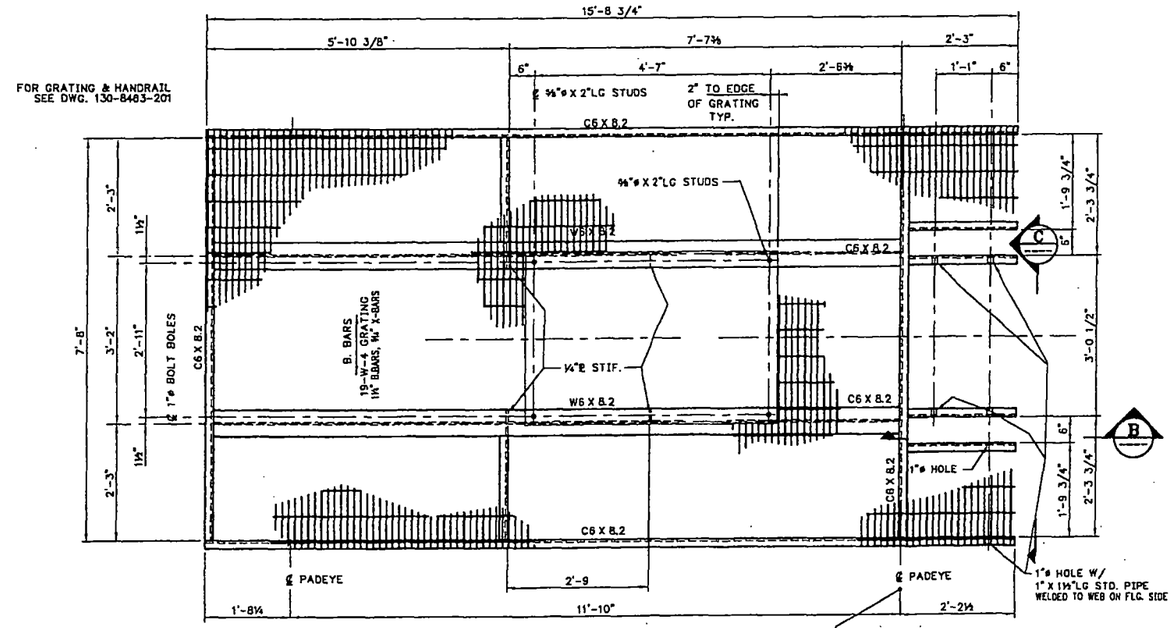

PUMP FLOAT PLATFORM

SCALE: ¾" = 1'-0

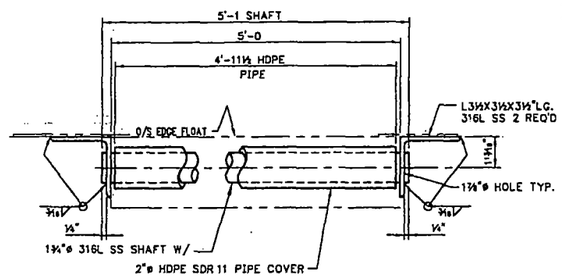

DETAIL 2

SCALE: 3" = 1'-0

SOUTH BUMPER 2 REQ'D

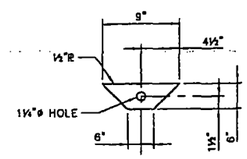

PADEYE, 4 REQ'D

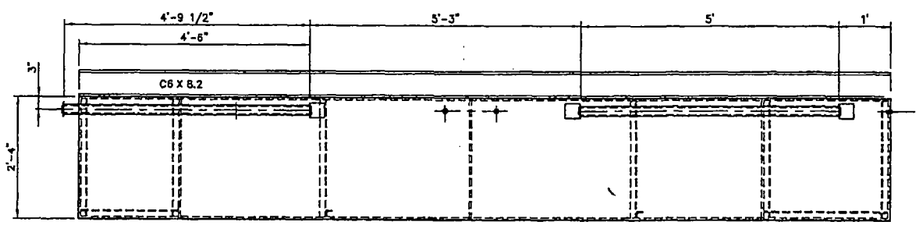

VIEW A

SCALE: ¾" = 1'-0

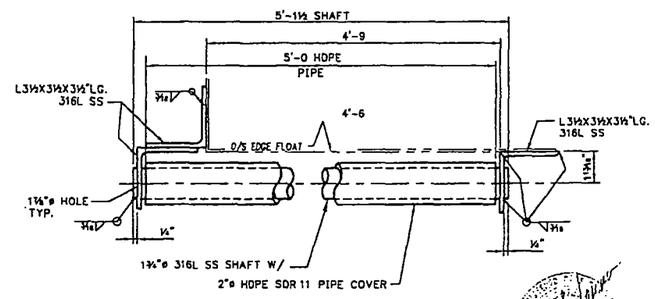

DETAIL 1

SCALE: 3" = 1'-0

NORTH BUMPER 2 REQ'D

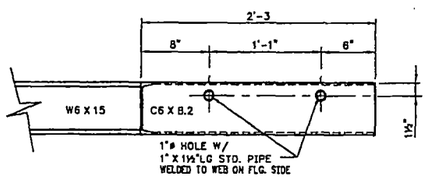

SECTION B

SCALE: 1½" = 1'-0

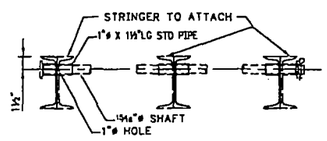

SECTION C

SCALE:

COPY TO:

08/11/98

Simplot

MINERALS & CHEMICAL GROUP POCATELLO, IDAHO

GENERAL PLANT EXPENSE
POLLUTION CONTROL
RECLAIMED WATER POND #2
PUMP PLATFORM
PUMP FLOAT, PLAN, SECTION & DETAILS

CAD DWG. #: 01H8463

JRS-8463-S-199

SCALE: NOTED

REVISION 1

DRAWN BY: D COVERT 10/15/1993
DESIGNED BY: D. COVERT
CHECKED BY:
APPV'D. BY:

REFERENCES

NO.	DESCRIPTION

REVISIONS

NO.	REVISED BY	DATE	DESCRIPTION	NO.	REVISED BY	DATE	DESCRIPTION
1	K. CORBRIDGE	08/18/98	AS BUILT				

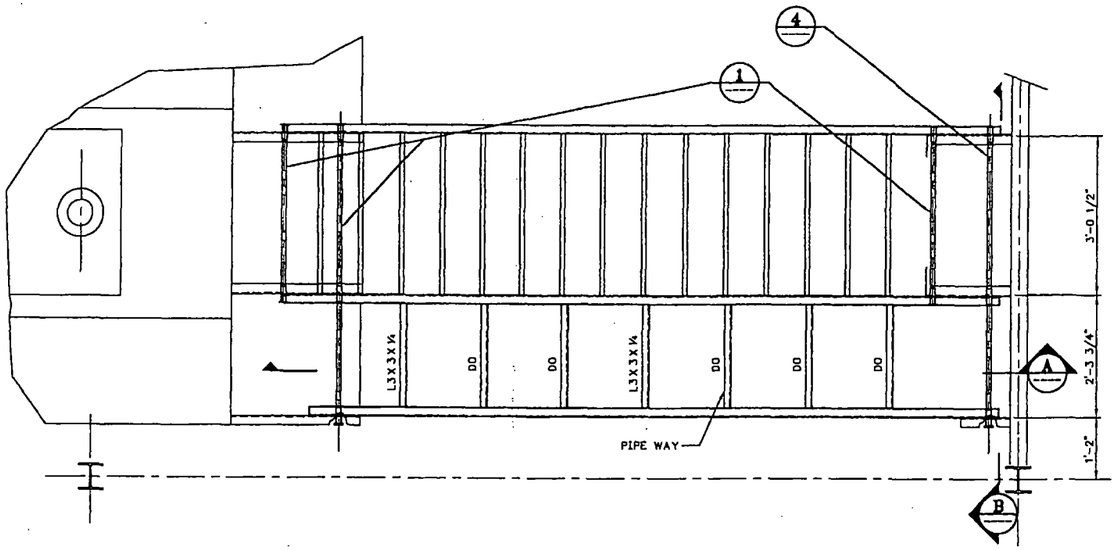

STAIR ASSEMBLY PLAN

SCALE: ¾"= 1'-0

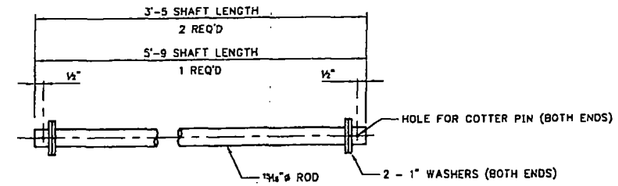

DETAIL 1

SCALE:

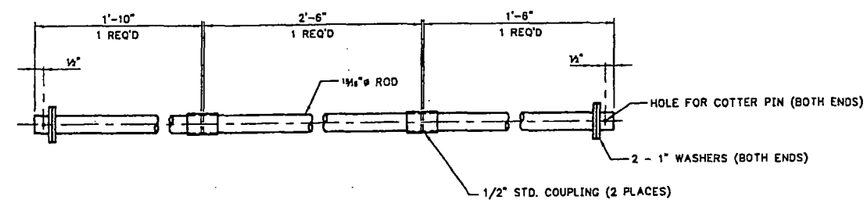

DETAIL 4

SCALE:

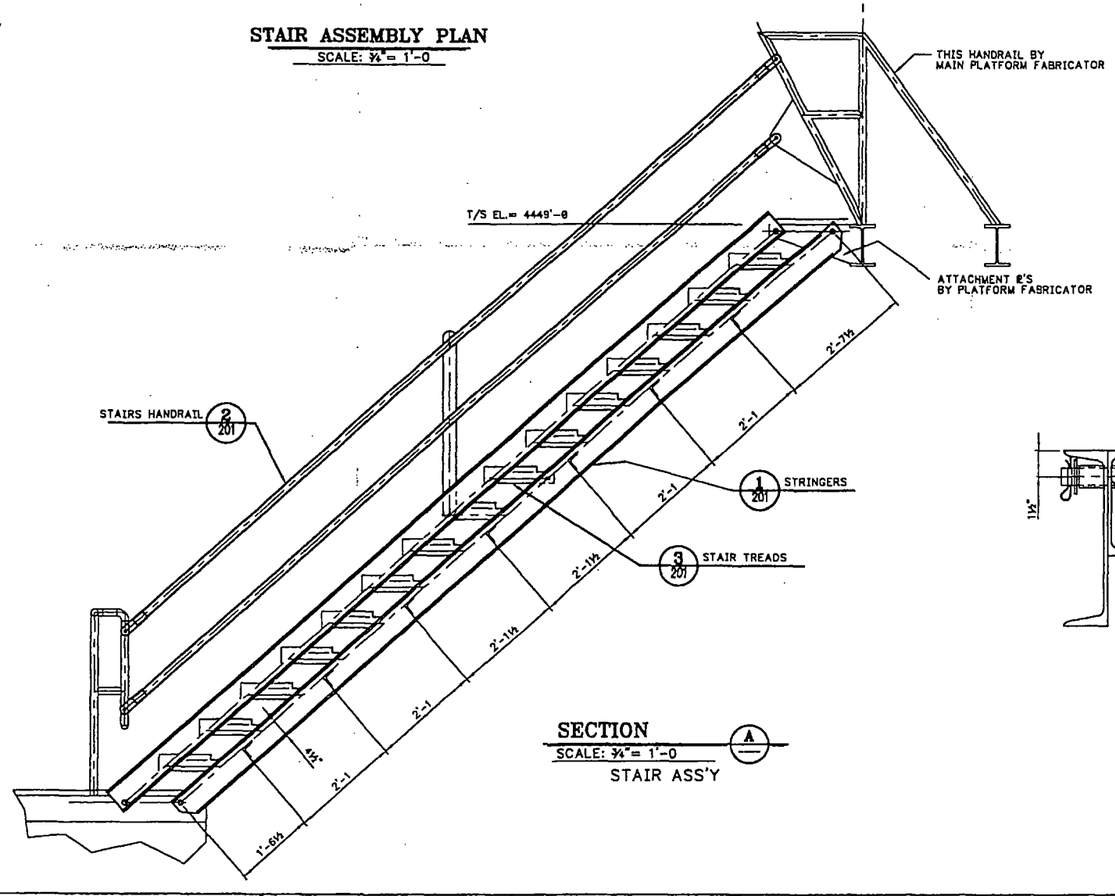

SECTION A

SCALE: ¾"= 1'-0

STAIR ASS'Y

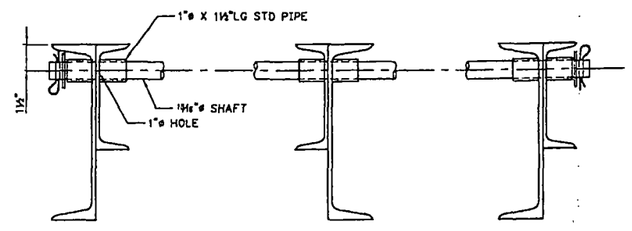

SECTION B

SCALE:

NOTE:

1. ALL STEEL, ASTM A-36
2. SHOP COAT STEEL WITH PORTER ZINCLOCK 351, 2 MILS DFT PRIMER, AND PORTER MCR 43 HIGH BUILD EPOXY, 4 MILS DFT FINISH COAT, LT. GREY. HANDRAILS OSHA YELLOW, STAIR TREADS BLACK.

COPY TO:

REGISTERED PROFESSIONAL ENGINEER STATE OF IDAHO 12035 JOHN J. ASCHENBRENNER

REF DATE 08/11/98

Simplot

MINERALS & CHEMICAL GROUP POCATELLO, IDAHO

GENERAL PLANT EXPENSE
POLLUTION CONTROL
RECLAIMED WATER POND #2
PUMP PLATFORM
STAIR ASSEMBLY

CAD DWG. #: 01BDB463

JRS-8463-S-200

SCALE: NOTED

REVISION 1

REFERENCES NO.	DESCRIPTION

REVISIONS NO.	REVISED BY	DATE	DESCRIPTION	NO.	REVISED BY	DATE	DESCRIPTION
1	P. ASCHENBRENNER	08/18/98	AS BUILT				

DRAWN BY: D COVERT	10/15/1993
DESIGNED BY: D. COVERT	10/01/1994
CHECKED BY:	
APPV'D. BY:	

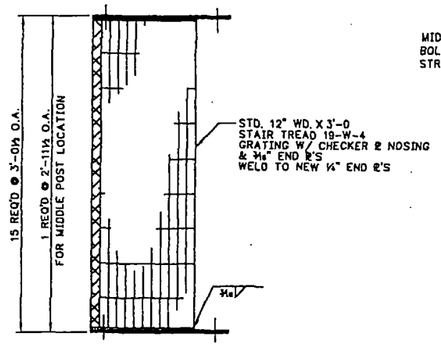

PLAN

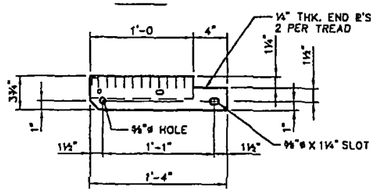

DETAIL 3
SCALE: 1½" = 1'-0
STAIR TREADS

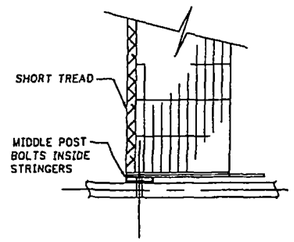

SECTION A
SCALE: 3/4" = 1'-0

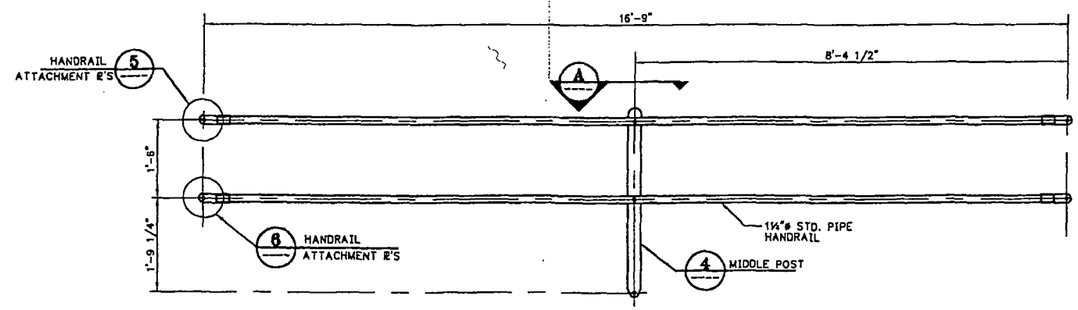

DETAIL 2
SCALE: 3/4" = 1'-0
STAIRS HANDRAIL 2 REQ'D

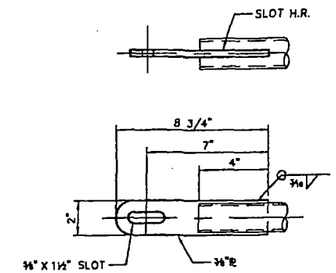

DETAIL 6
SCALE: 3" = 1'-0
MIDRAIL ATTACHMENT ℞'S 2 REQ'D

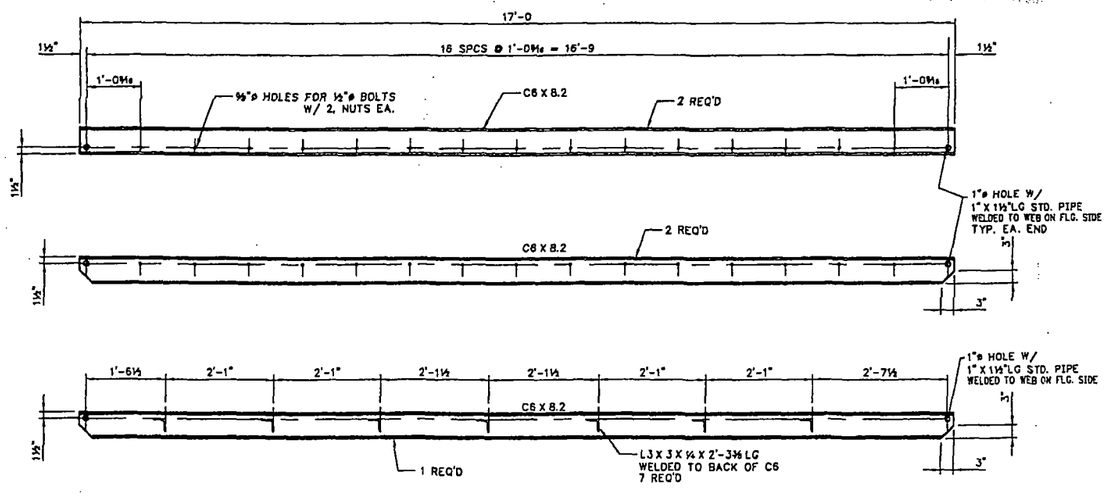

DETAIL 1
SCALE: 3/4" = 1'-0
STRINGERS

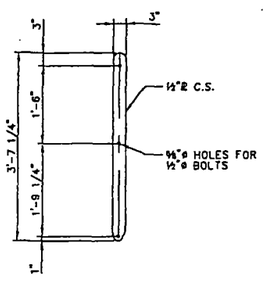

DETAIL 4
SCALE: 3/4" = 1'-0
MIDDLE POST 1 REQ'D

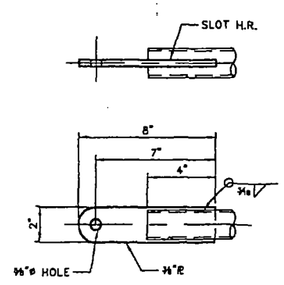

DETAIL 5
SCALE: 3" = 1'-0
HANDRAIL ATTACHMENT ℞'S 2 REQ'D

COPY TO:

Plot Date: 02/26/94

Simplot
MINERALS & CHEMICAL GROUP POCATELLO, IDAHO

GENERAL PLANT EXPENSE
POLLUTION CONTROL
RECLAIMED WATER POND #2
PUMP PLATFORM
STAIR DETAILS

CAD DWG. #: 01G8453

JRS-8463-S-201

SCALE: NOTED

REVISION 0

REFERENCES NO.	DESCRIPTION

REVISIONS NO.	REVISED BY	DATE	DESCRIPTION	NO.	REVISED BY	DATE	DESCRIPTION
1	P. ASCHENBRENNER	08/18/98	AS BUILT				

DRAWN BY: D COVERT	10/15/1993
DESIGNED BY: D. COVERT	
CHECKED BY:	
APPV'D. BY:	

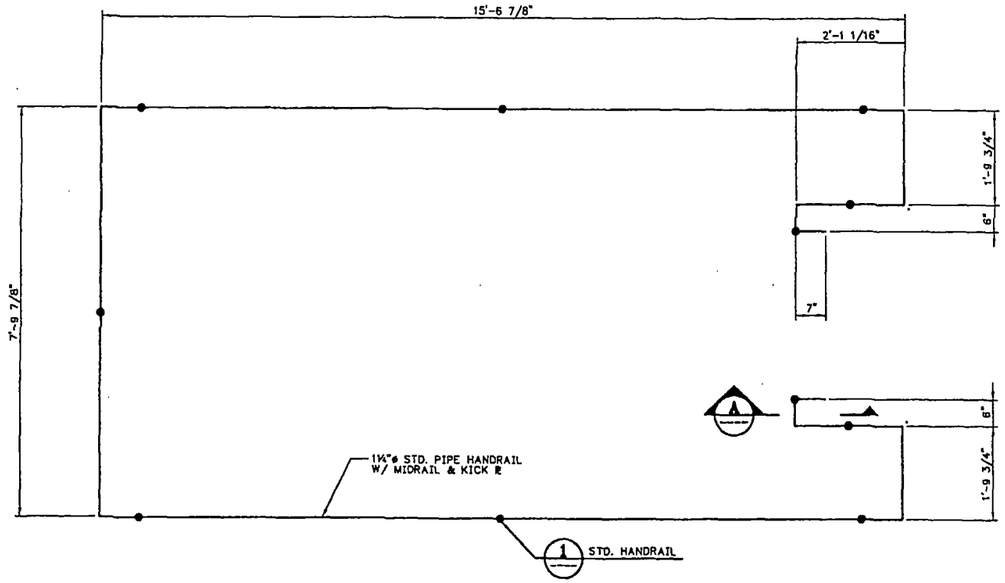

HANDRAIL PLAN
SCALE: ¾"= 1'-0

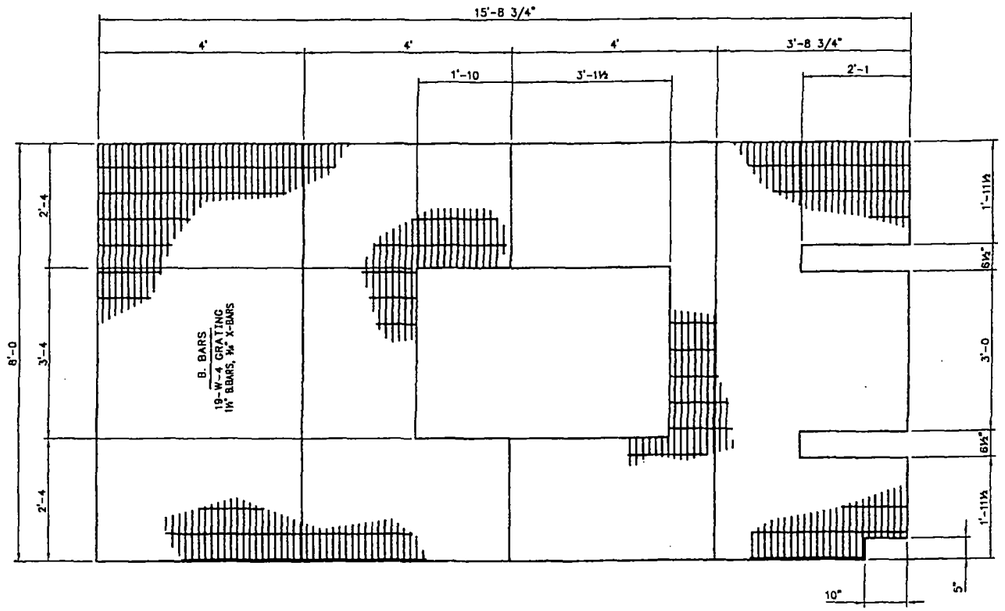

GRATING PLAN
SCALE: ¾"= 1'-0

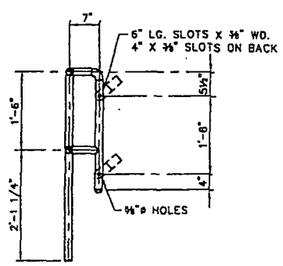

SECTION A
SCALE: ¾"= 1'-0
SIM. 2 PLCS

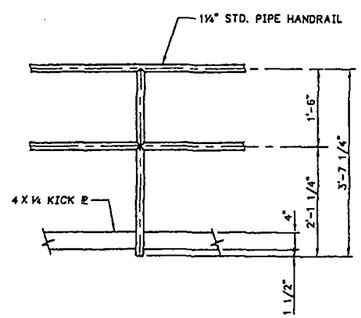

DETAIL 1
SCALE: ¾"= 1'-0
STD. HANDRAIL

COPY TO:

Kan Date 08/11/98

Simplot
MINERALS & CHEMICAL GROUP POCATELLO, IDAHO

GENERAL PLANT EXPENSE
POLLUTION CONTROL
RECLAIMED WATER POND #2
PUMP PLATFORM
GRATING & HANDRAIL (FLOAT)

CAD DWG. #: 01BC8463

JRS-8463-S-202

SCALE: NOTED

REVISION 1

DRAWN BY: D COVERT	10/15/1993
DESIGNED BY: D. COVERT	10/01/1994
CHECKED BY:	
APPV'D. BY:	

REFERENCES

NO.	DESCRIPTION

REVISIONS

NO.	REVISED BY	DATE	DESCRIPTION	NO.	REVISED BY	DATE	DESCRIPTION
1	P. ASCHENBRENNER	08/18/98	AS BUILT				

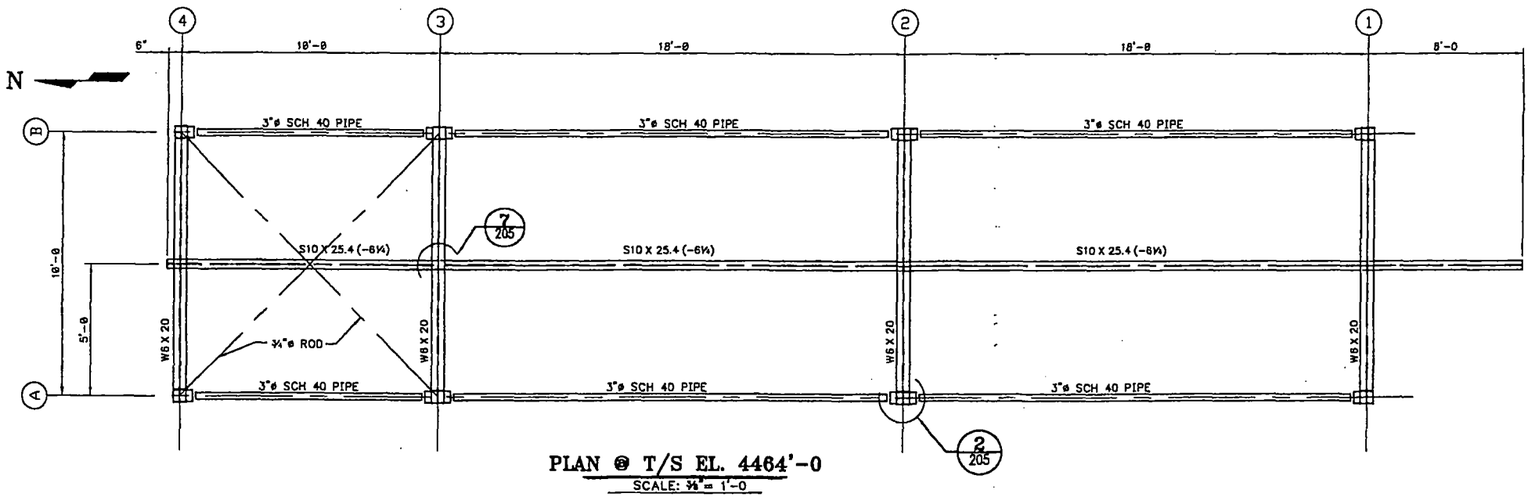

PLAN @ T/S EL. 4464'-0

SCALE: 3/8" = 1'-0

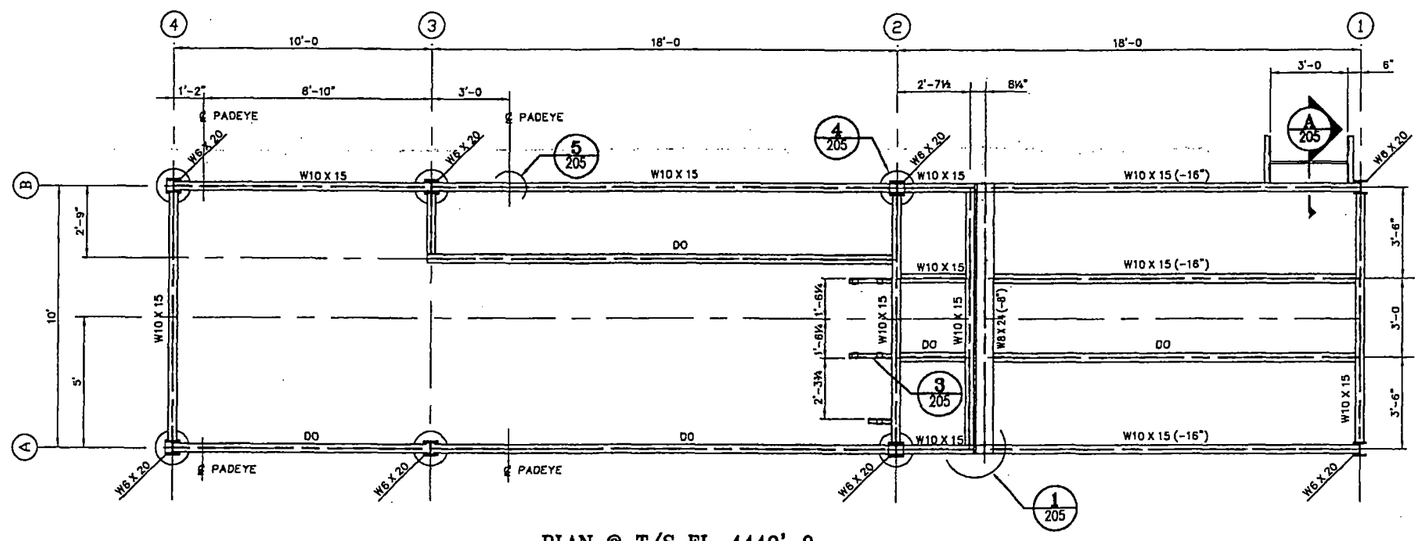

PLAN @ T/S EL. 4449'-0

SCALE: 3/8" = 1'-0

NOTE:

1. ALL STEEL, ASTM A-36
2. SHOP COAT STEEL WITH PORTER ZINCLOCK 351, 2 MILS DFT PRIMER, AND PORTER MCR 43 HIGH BUILD EPOXY, 4 MILS DFT FINISH COAT, LT. GREY. HANDRAILS OSHA YELLOW.

COPY TO:

08/11/98

Simplot

MINERALS & CHEMICAL GROUP POCATELLO, IDAHO

GENERAL PLANT EXPENSE
POLLUTION CONTROL
RECLAIMED WATER POND #2
PUMP PLATFORM
PLATFORM STRUCT STEEL PLANS

CAD DWG. # 01F8463

JRS-8463-S-203

SCALE: NOTED

REVISION 1

REFERENCES NO.	DESCRIPTION

REVISIONS NO.	REVISED BY	DATE	DESCRIPTION	NO.	REVISED BY	DATE	DESCRIPTION
1	P. ASCHENBRENNER	08/18/98	AS BUILT				

DRAWN BY: D COVERT	10/15/1993	
DESIGNED BY: D. COVERT	10/01/1994	
CHECKED BY:		
APPV'D. BY:		

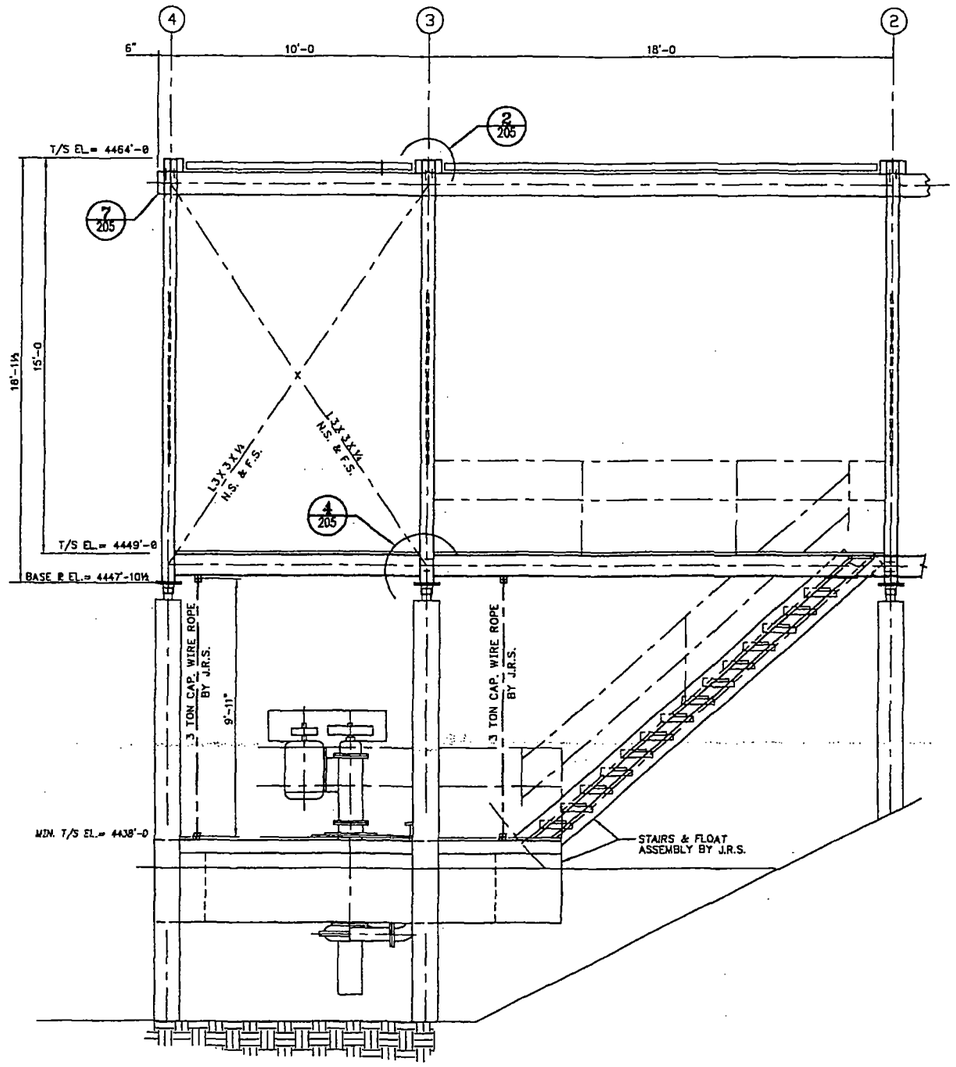

VIEW A/198
SCALE: 3/8" = 1'-0

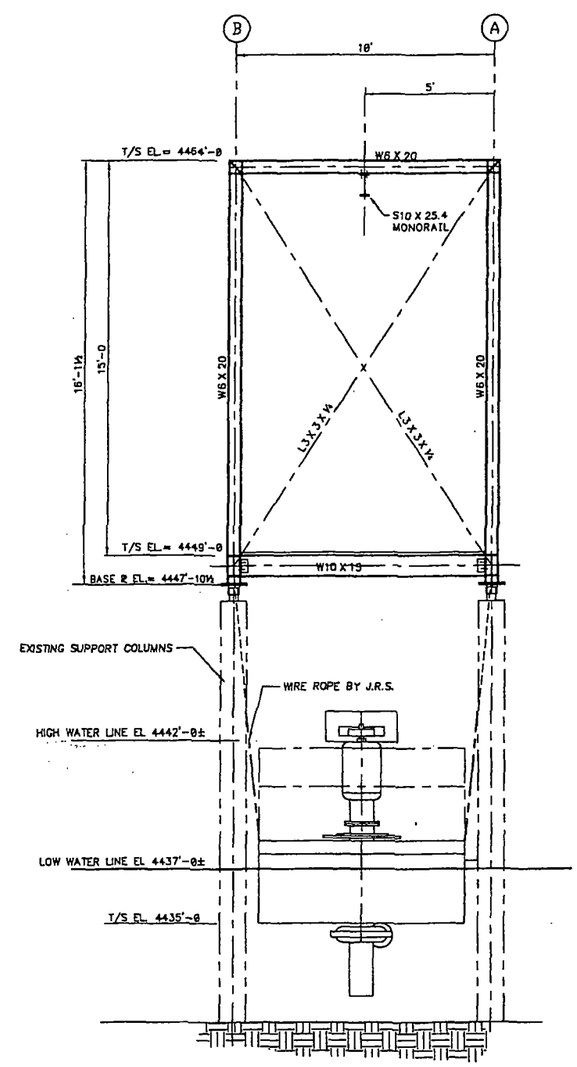

VIEW B/198
SCALE: 3/8" = 1'-0

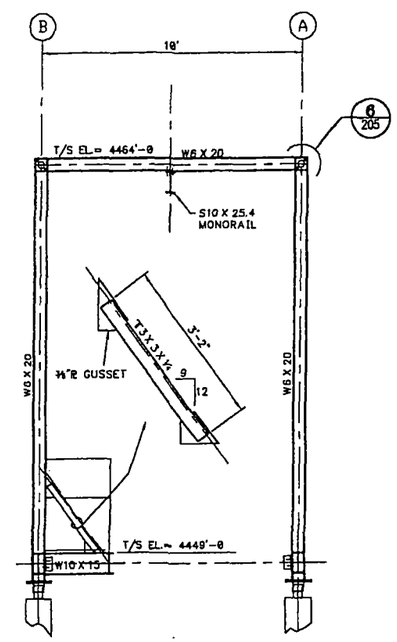

SECTION C/198
SCALE: 3/8" = 1'-0

COPY TO:

FOR USE 08/11/98

Simplot
MINERALS & CHEMICAL GROUP POCATELLO, IDAHO

GENERAL PLANT EXPENSE
POLLUTION CONTROL
RECLAIMED WATER POND #2
PUMP PLATFORM
ELEVATIONS

CAD DWG. # 01BB8463

JRS-8463-S-204

SCALE: NOTED

REVISION 1

REFERENCES NO.	DESCRIPTION

REVISIONS NO.	REVISED BY	DATE	DESCRIPTION	NO.	REVISED BY	DATE	DESCRIPTION
1	P. ASCHENBRENNER	08/18/98	AS BUILT				

DRAWN BY: D COVERT	10/15/1993	
DESIGNED BY: D. COVERT	10/01/1993	
CHECKED BY:		
APPV'D. BY:		

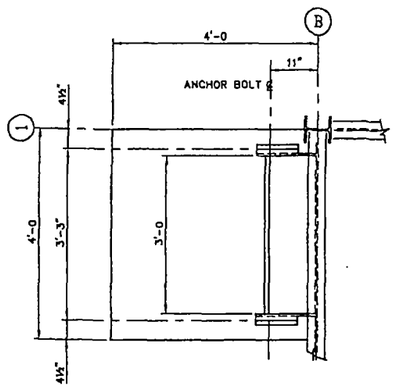

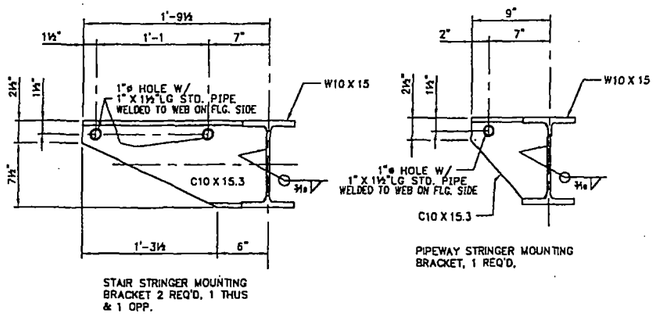

DETAIL 3/202
SCALE: 1½" = 1'-0
STRINGER MOUNTING BRACKETS

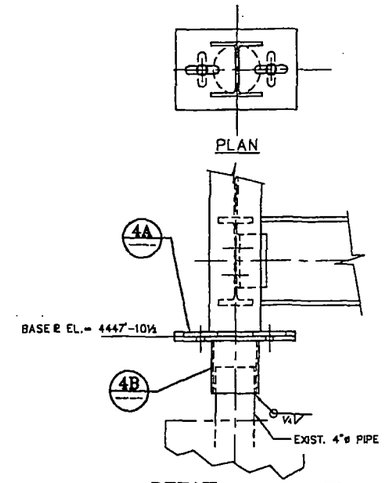

DETAIL 4/202
SCALE: ¾" = 1'-0

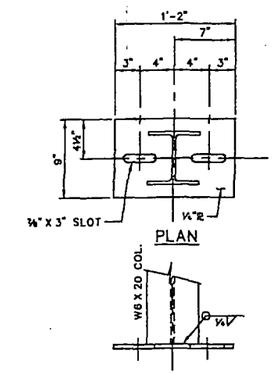

DETAIL 4A
SCALE: ¾" = 1'-0

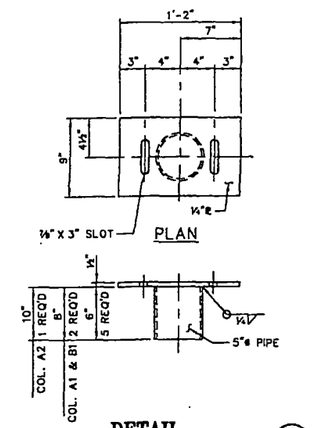

DETAIL 4B
SCALE: ¾" = 1'-0

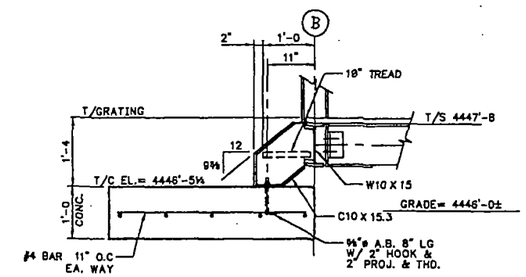

SECTION A/202
SCALE: 1½" = 1'-0

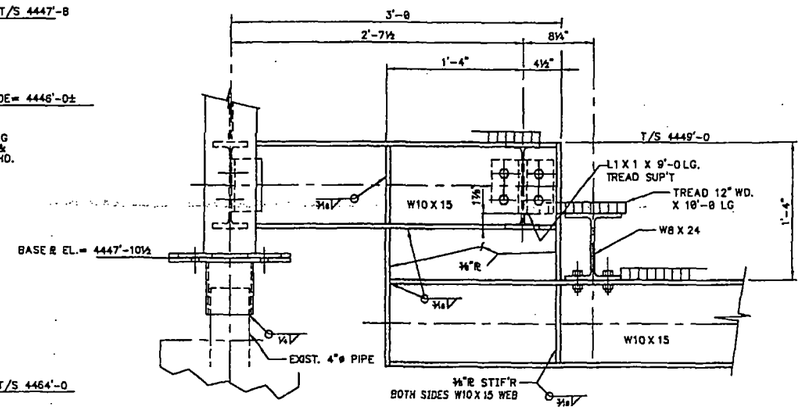

DETAIL 1/202
SCALE: 1½" = 1'-0

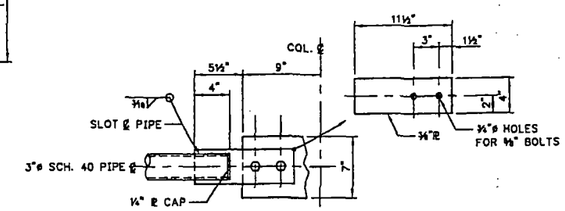

SECTION B
SCALE: 1½" = 1'-0

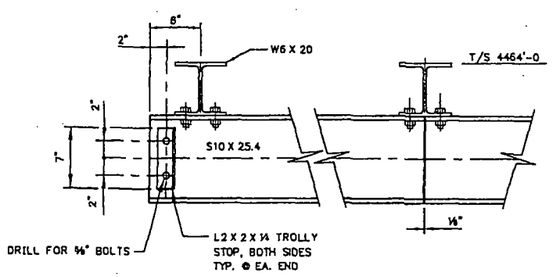

DETAIL 7/203
SCALE: 1½" = 1'-0

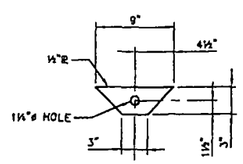

DETAIL 5/202
SCALE: 1½" = 1'-0
PADEYE FOR CHAIN SUP'T, 4 REQ'D

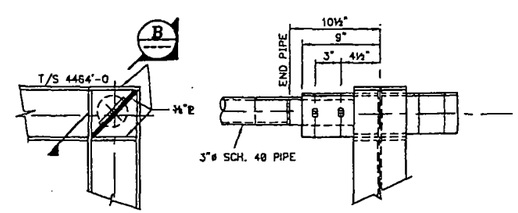

DETAIL 2/203
SCALE: 1½" = 1'-0

COPY TO:

Simplot
MINERALS & CHEMICAL GROUP POCATELLO, IDAHO

AS BUILT 08/11/98

GENERAL PLANT EXPENSE
POLLUTION CONTROL
RECLAIMED WATER POND #2
PUMP PLATFORM
MISC DETAILS

CAD DWG. #: 011E8463

JRS-8463-S-205

SCALE: NOTED

REVISION 1

REFERENCES NO.	DESCRIPTION

REVISIONS NO.	REVISED BY	DATE	DESCRIPTION	NO.	REVISED BY	DATE	DESCRIPTION
1	P. ASCHENBRENNER	08/10/98	AS BUILT				

DRAWN BY: D COVERT	10/15/1993	
DESIGNED BY: D. COVERT	10/01/1994	
CHECKED BY:		
APPV'D. BY:		

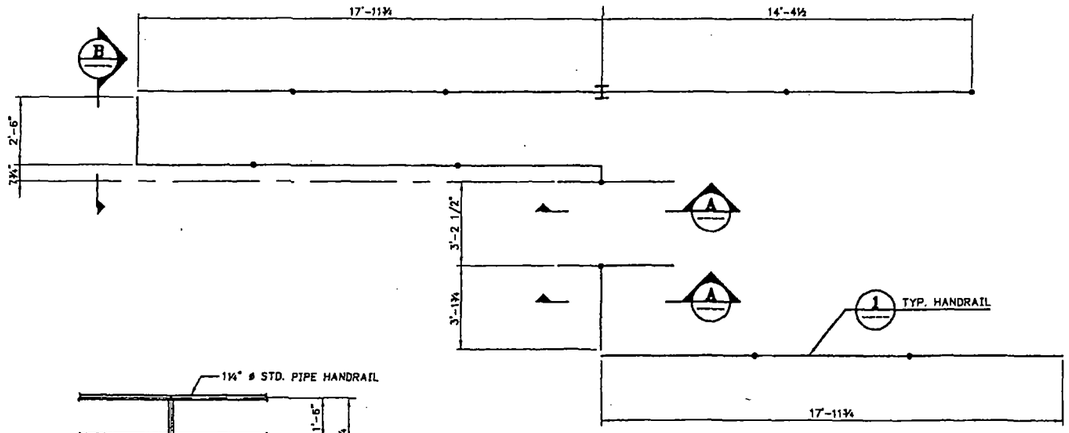

HANDRAIL PLAN
SCALE: ⅜" = 1'-0

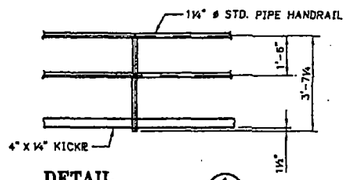

DETAIL 1
SCALE: ⅜" = 1'-0
TYP. HANDRAIL

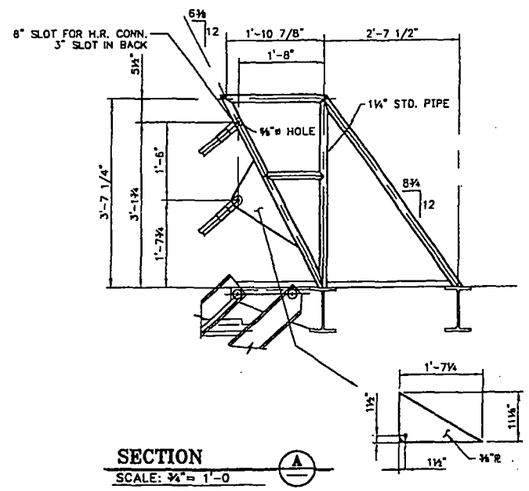

SECTION A
SCALE: ¾" = 1'-0
SIM. 2 PLCS

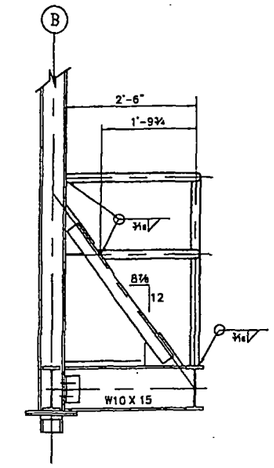

SECTION B
SCALE: ¾" = 1'-0

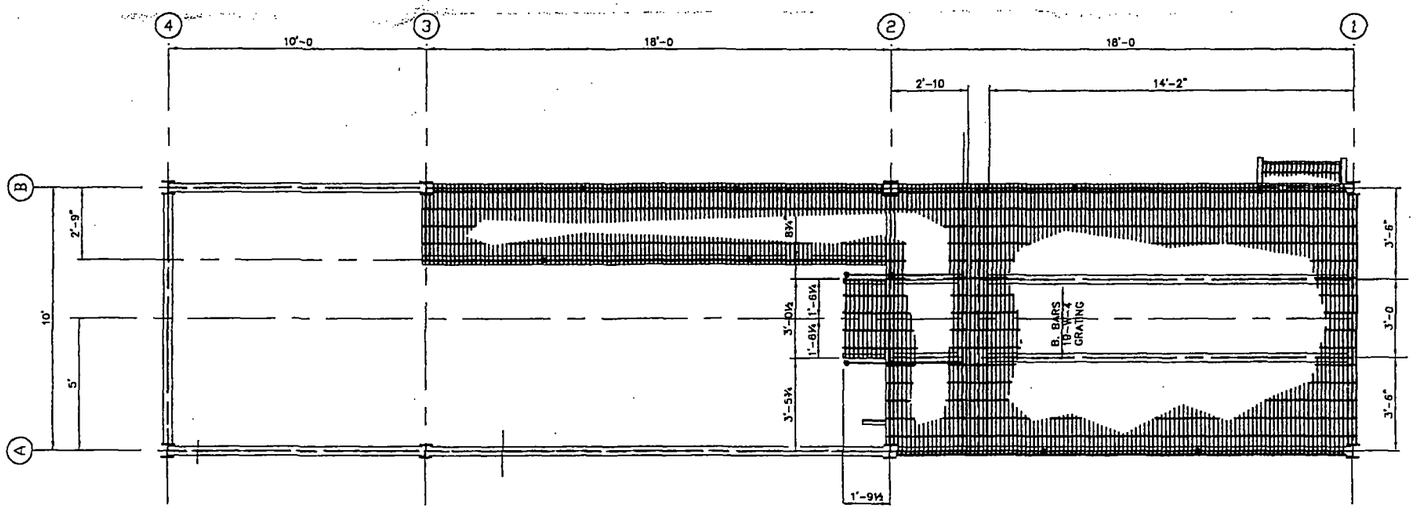

PLAN @ T/S EL. 4449'-0
SCALE: ⅜" = 1'-0

COPY TO:

Rev Date 08/11/98

Simplot
MINERALS & CHEMICAL GROUP POCATELLO, IDAHO

GENERAL PLANT EXPENSE
POLLUTION CONTROL
RECLAIMED WATER POND #2
PUMP PLATFORM
GRATING & HANDRAIL

CAD DWG. #: 01BA8463

JRS-8463-S-206

SCALE: NOTED

REVISION 1

REFERENCES NO.	DESCRIPTION

REVISIONS NO.	REVISED BY	DATE	DESCRIPTION	NO.	REVISED BY	DATE	DESCRIPTION
1	P. ASCHENBRENNER	08/10/98	AS BUILT				

DRAWN BY: D COVERT	11/15/1993
DESIGNED BY: D. COVERT	10/01/1993
CHECKED BY:	
APPV'D. BY:	

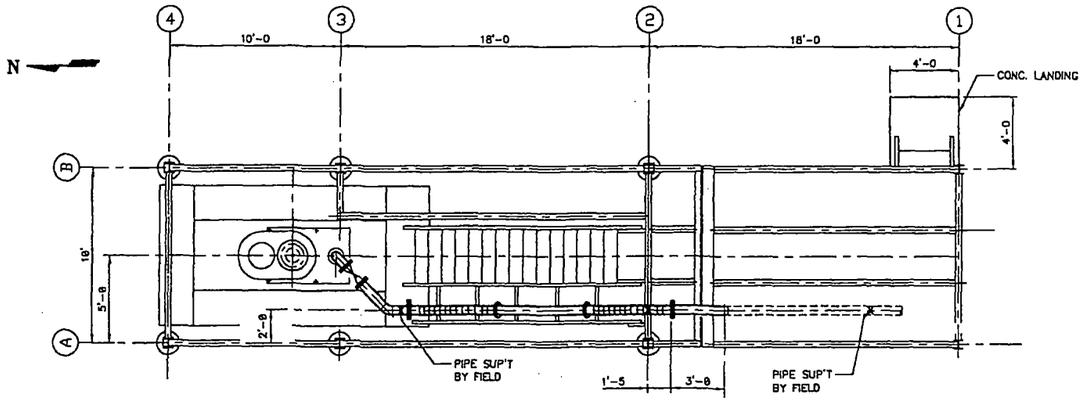

PIPING PLAN
SCALE: ¼" = 1'-0

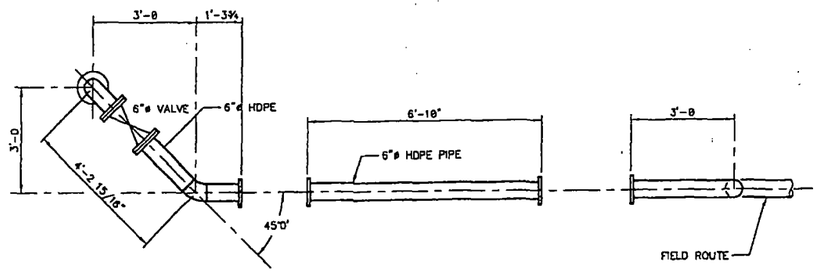

PIPE SPOOLS PLAN
SCALE: ½" = 1'-0

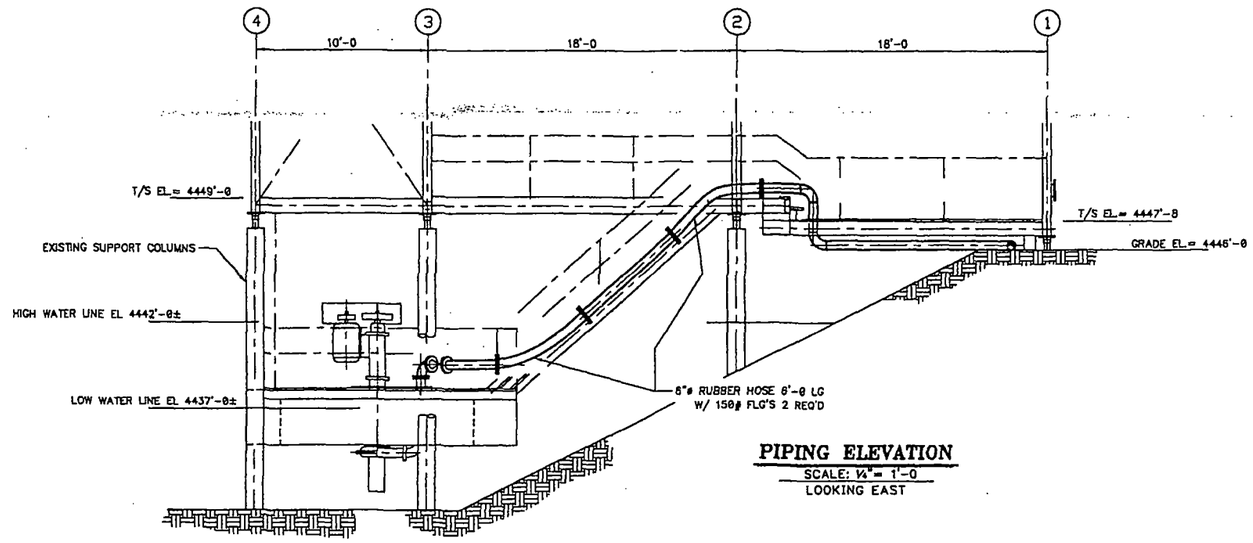

PIPING ELEVATION
SCALE: ¼" = 1'-0
LOOKING EAST

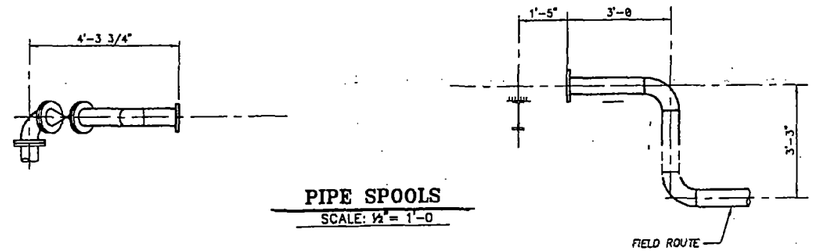

PIPE SPOOLS
SCALE: ½" = 1'-0

COPY TO:

Plot date 08/11/98

Simplot
MINERALS & CHEMICAL GROUP POCATELLO, IDAHO

GENERAL PLANT EXPENSE
POLLUTION CONTROL
RECLAIMED WATER POND #2
DISCHARGE PIPING, PLATFORM AREA
PLAN, ELEVATION & DETAILS

CAD DWG. #: 01108463

JRS-8463-P-207

SCALE: NOTED

REVISION 1

REFERENCES NO.	DESCRIPTION

REVISIONS NO.	REVISED BY	DATE	DESCRIPTION	NO.	REVISED BY	DATE	DESCRIPTION
1	P. ASCHENBRENNER	08/10/98	AS BUILT				

DRAWN BY: D COVERT	10/15/1993
DESIGNED BY: D. COVERT	10/01/1993
CHECKED BY:	
APPV'D. BY:	

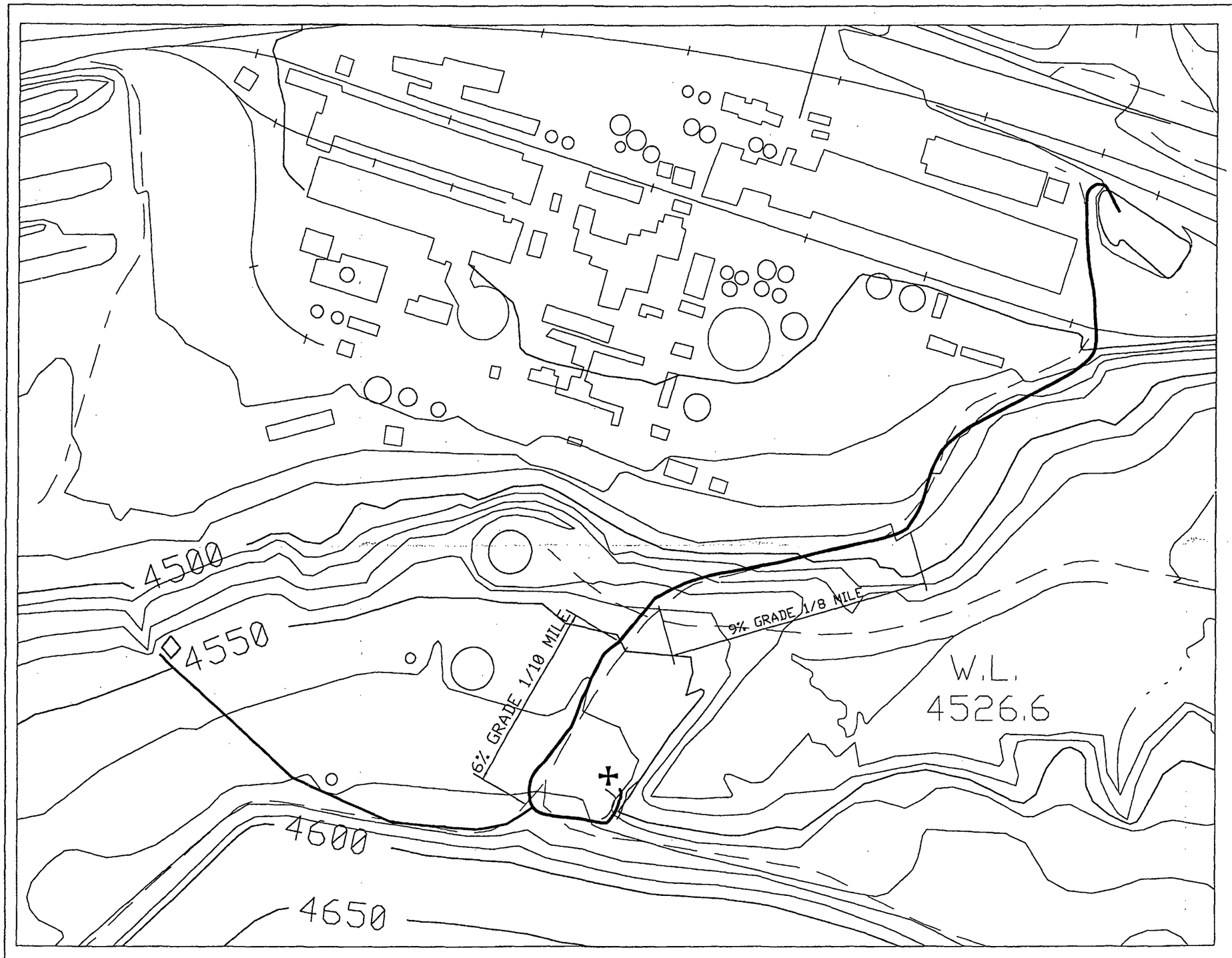

NOTES:

EXCAVATION ROUTE TO COVER 5/8 MILE AND 125' ELEV.

✕ INDICATES DUMP SITE.

STOCK ROUTE TO COVER 3/4 MILE AND 125' ELEV.

◇ INDICATES STOCK DIRT SITE.

COPY TO:

PLOT SCALE: 1=1800	PLOT DATE: 04/21/97

Simplot

MINERALS & CHEMICAL GROUP POCATELLO, IDAHO

GENERAL PLANT EXPENSE
POLLUTION CONTROL
RECLAIMED WATER POND #2
EXCAVATION HAUL MAP
PLAN & DETAILS

CAD DWG. # 93X18463

JRS-8463-C-214

SCALE: 1"= 150'-0

REVISION 0

REFERENCES NO.	DESCRIPTION

REVISIONS NO.	REVISED BY	DATE	DESCRIPTION	NO.	REVISED BY	DATE	DESCRIPTION

DRAWN BY: K CORBRIDGE	7/12/96
DESIGNED BY:	
CHECKED BY:	
APPV'D. BY:	

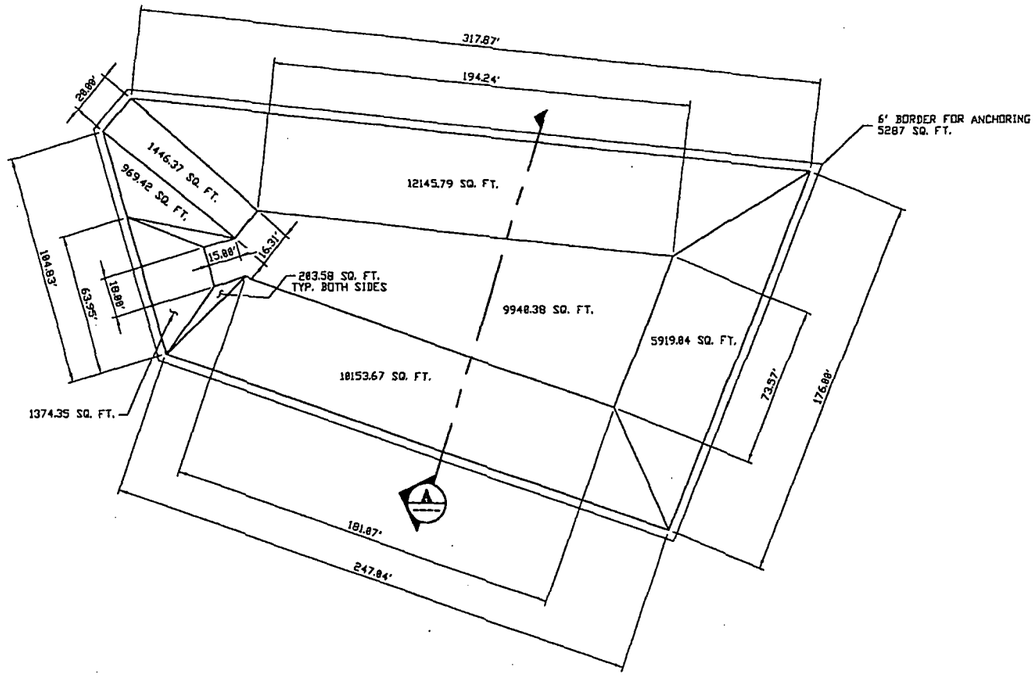

SECTION A
SCALE: 3/8"=1'-0

PLAN VIEW
SCALE: 3/8"=1'-0

TOTAL LINER AREA = 47644 SQ. FT.
TOTAL DRAINAGE GRID AREA = 42357 SQ. FT.

COPY TO:

PLOT SCALE 1=32

PLOT DATE 08/11/98

Simplot
MINERALS & CHEMICAL GROUP POCATELLO, IDAHO

GENERAL PLANT EXPENSE
POLLUTION CONTROL
RECLAIMED WATER POND #2
LINER PLAN & DETAILS

REFERENCES NO.	DESCRIPTION

REVISIONS NO.	REVISED BY	DATE	DESCRIPTION	NO.	REVISED BY	DATE	DESCRIPTION
1	P. ASCHENBRENNER	08/18/98	AS BUILT				

DRAWN BY: K CORBRIDGE	4/21/97	
DESIGNED BY:		
CHECKED BY:		
APPV'D. BY:		

CAD DWG. #: 83X28463

JRS-8463-C-215

SCALE: 3/8"=1'-0

REVISION 1

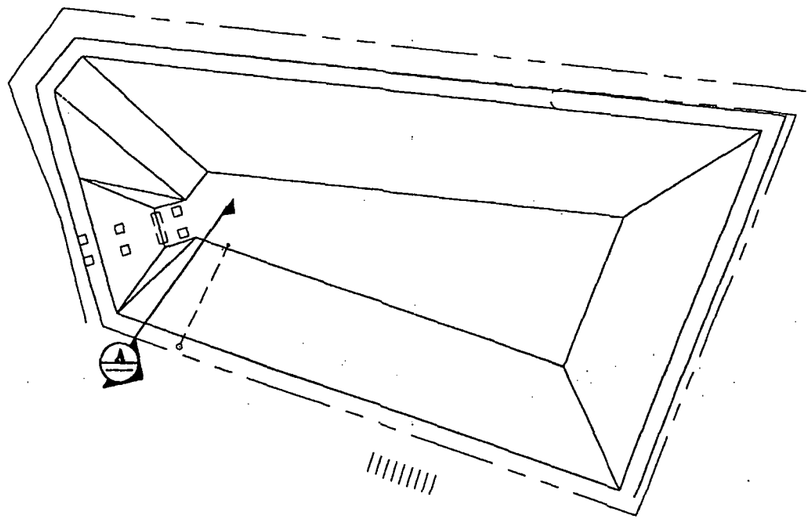

PLAN VIEW
SCALE: 3/8"=1'-0

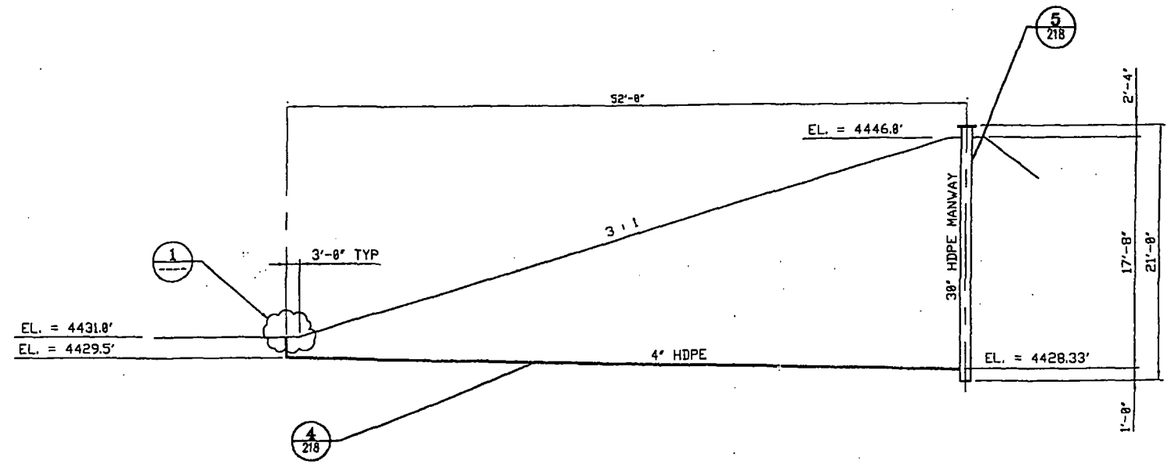

SECTION A
SCALE: 3/4"=1'-0

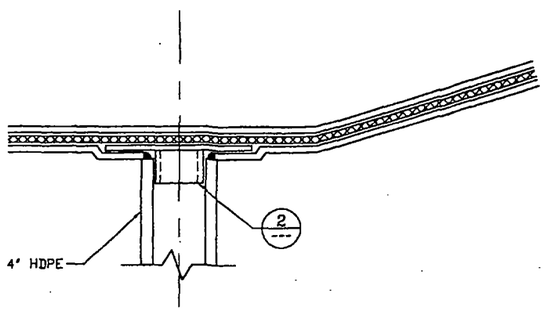

DETAIL 1
SCALE: N.T.S.

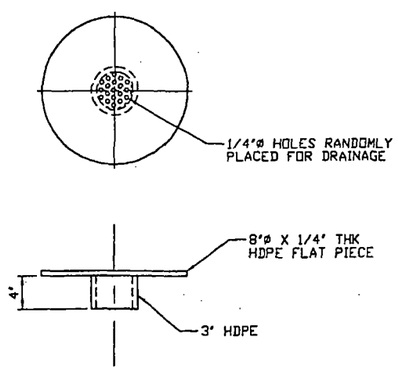

DETAIL 2
SCALE: N.T.S.
PLUG DETAIL

COPY TO:

PLOT SCALE 1=32 | PLOT DATE 08/11/98

Simplot
MINERALS & CHEMICAL GROUP POCATELLO, IDAHO

GENERAL PLANT EXPENSE
POLLUTION CONTROL
RECLAIMED WATER POND #2
LEAK DETECTION SYSTEM
PLAN & DETAILS

CAD DWG. #: 83X38463
JRS-8463-C-216
SCALE: 3/8"=1'-0
REVISION 1

REFERENCES NO.	DESCRIPTION

REVISIONS NO.	REVISED BY	DATE	DESCRIPTION	NO.	REVISED BY	DATE	DESCRIPTION
1	P. ASCHENBRENNER	08/10/98	AS BUILT				

DRAWN BY: K CORBRIDGE	04/22/1997	
DESIGNED BY:		
CHECKED BY:		
APPV'D. BY:		

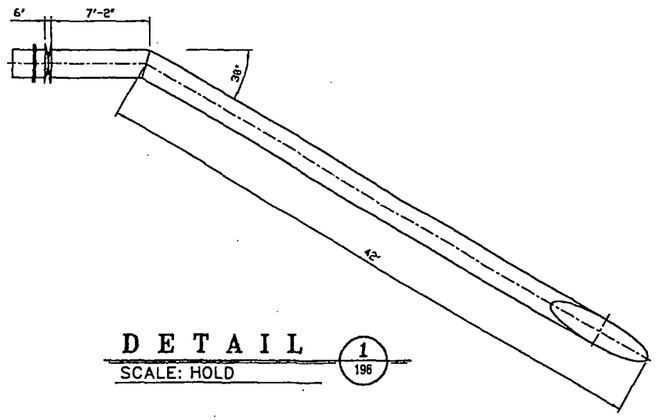

DETAIL 1 / 196
SCALE: HOLD

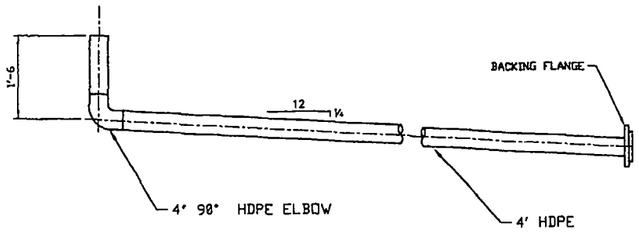

DETAIL 4 / 216
SCALE: HOLD

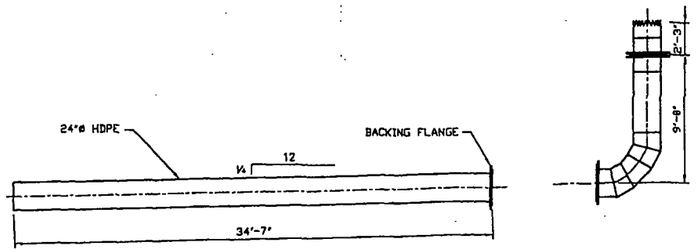

DETAIL 2 / 196
SCALE: HOLD

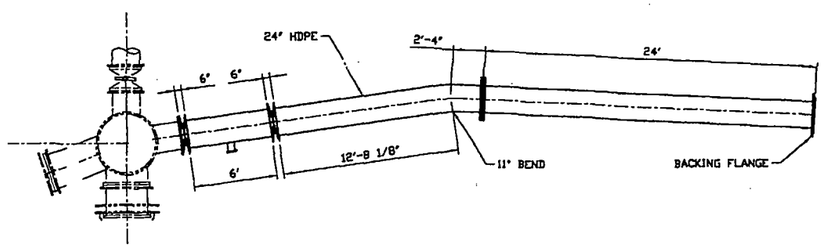

DETAIL 3 / 197
SCALE: HOLD

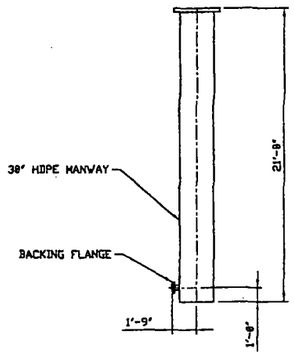

DETAIL 5 / 216
SCALE: HOLD

COPY TO:

Simplot
MINERALS & CHEMICAL GROUP POCATELLO, IDAHO

GENERAL PLANT EXPENSE
POLLUTION CONTROL
RECLAIMED WATER POND #2
PIPING PLAN & DETAILS

REFERENCES NO.	DESCRIPTION

REVISIONS NO.	REVISED BY	DATE	DESCRIPTION	NO.	REVISED BY	DATE	DESCRIPTION

DRAWN BY: B COOPER	07/15/1997	
DESIGNED BY:		
CHECKED BY:		
APPV'D. BY:		

CAD DWG. #: 046RB463

JRS-8463-P-218

SCALE:

REVISION

MFG OFFICE LOCATIONS

CALIFORNIA
Arcata
Irvine
San Francisco

COLORADO
Boulder
Fort Collins

IDAHO
Osburn

MONTANA
Missoula

NEW JERSEY
Edison

OREGON
Portland

PENNSYLVANIA
Pittsburgh

TEXAS
Austin
Fort Worth
Houston
Port Lavaca
Texarkana

WASHINGTON
Seattle

CORPORATE HEADQUARTERS

MFG, Inc.
4900 Pearl East Circle
Suite 300W
Boulder, Colorado 80301-6118
303/447-1823
303/447-1836/FAX
www.mfgenv.com